CAPITAL IMPROVEMENTS PROGRAM
COUNTY ROAD PROJECT #301422

ST. JOHNS ROAD

NE 50TH AVENUE TO NE 72ND AVENUE

PLANS FOR THE CONSTRUCTION OF
ROADWAYS AND STORM DRAINAGE

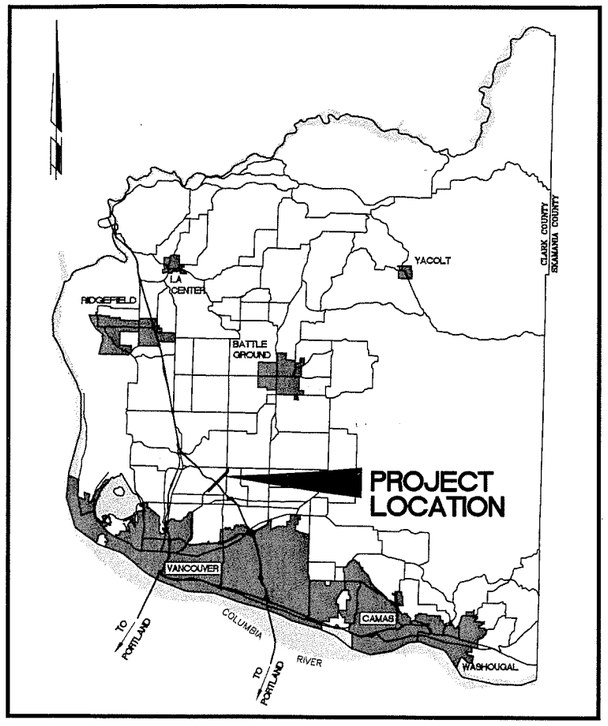

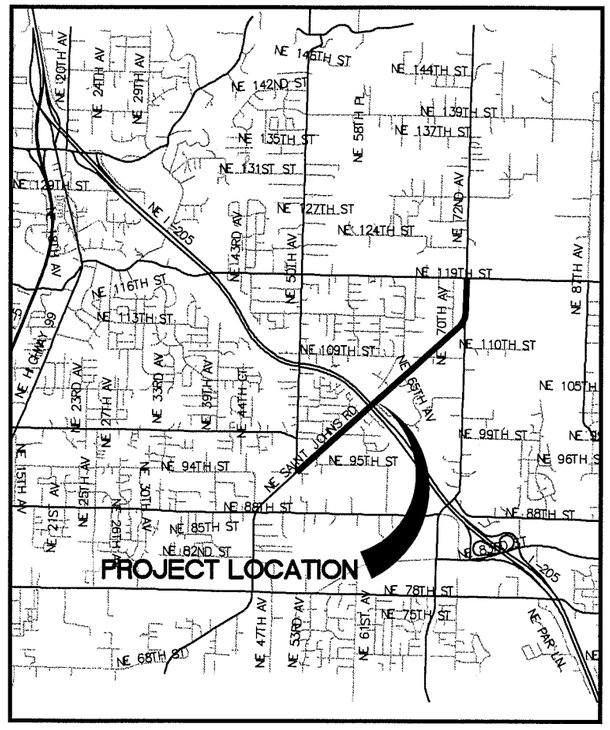

INDEX OF SHEETS

1	COV1	COVER SHEET
2	SQ1	SUMMARY OF QUANTITIES AND LEGEND
3	LAY1	LAYOUT SHEET
4	TS1	TYPICAL SECTIONS
5	TS2	TYPICAL SECTIONS
6	HV1	HORIZONTAL AND VERTICAL CONTROL
7	EC1	EROSION CONTROL PLAN
8	EC2	EROSION CONTROL PLAN
9	EC3	EROSION CONTROL PLAN
10	EC4	EROSION CONTROL DETAILS
11	WM1G1	WETLAND MITIGATION #1: GRADING (SHT. 1 OF 2)
12	WM1G2	WETLAND MITIGATION #1: GRADING (SHT. 2 OF 2)
13	WM1S1	WETLAND MITIGATION #1: STAKING (SHT. 1 OF 2)
14	WM1S2	WETLAND MITIGATION #1: STAKING (SHT. 2 OF 2)
15	WM1P1	WETLAND MITIGATION #1: PLANTING (SHT. 1 OF 2)
16	WM1P2	WETLAND MITIGATION #1: PLANTING (SHT. 2 OF 2)
17	WM1X1	WETLAND MITIGATION #1: CROSS SECTIONS
18	WM1D1	WETLAND MITIGATION #1: STAKING DATA
19	WM1EC	WETLAND MITIGATION AREA #2: EROSION CONTROL
20	WM2G1	WETLAND MITIGATION #2: GRADING
21	WM2S1	WETLAND MITIGATION #2: STAKING
22	WM2P1	WETLAND MITIGATION #2: PLANTING
23	WM2X1	WETLAND MITIGATION AREA #2: CROSS SECTIONS
24	WM2D1	WETLAND MITIGATION AREA #2: STAKING DATA
25	WM2EC	WETLAND MITIGATION AREA #2: EROSION CONTROL
26	WMPL	WETLAND MITIGATION AREAS; PLANTING LISTS
27	RD1	ROADWAY DETAILS
28	RD2	ROADWAY DETAILS
29	DD1	DRAINAGE DETAILS
30	DD2	DRAINAGE DETAILS
31	DD3	DRAINAGE DETAILS
32	DD4	DRAINAGE DETAILS
33	DD5	DRAINAGE DETAILS
34	DD6	DRAINAGE DETAILS
35	DD7	DRAINAGE DETAILS
36	DSC1	STREAM CROSSING DETAILS I
37	DSC2	STREAM CROSSING DETAILS II
38	DWM1	WETLAND MTITGATION AREAS; TYPICAL SECTIONS
39	DWM2	WETLAND MITIGATION AREA DETAILS
40	W01	RETAINING WALLS
41	W02	RETAINING WALL (1, 2, 3, 4) DETAILS
42	W03	RETAINING WALL (5 & 6) DETAILS
43	PP1	PLAN & PROFILE ST. JOHNS (STA 26+00 TO 31+00)
44	PP2	PLAN & PROFILE ST. JOHNS (STA 31+00 TO 36+00)
45	PP3	PLAN & PROFILE ST. JOHNS (STA 36+00 TO 41+00)
46	PP4	PLAN & PROFILE ST. JOHNS (STA 41+00 TO 46+00)
47	PP5	PLAN & PROFILE ST. JOHNS (STA 46+00 TO 51+00)
48	PP6	PLAN & PROFILE ST. JOHNS (STA 51+00 TO 56+00)
49	PP7	PLAN & PROFILE ST. JOHNS (STA 56+00 TO 61+00)
50	PP8	PLAN & PROFILE ST. JOHNS (STA 61+00 TO 66+00)
51	PP9	PLAN & PROFILE ST. JOHNS (STA 66+00 TO 71+00)
52	PP10	PLAN & PROFILE ST. JOHNS (STA 71+00 TO 76+00)
53	PP11	PLAN & PROFILE ST. JOHNS (STA 76+00 TO 81+00)
54	PP12	PLAN & PROFILE ST. JOHNS (STA 81+00 TO 86+00)
55	PP13	PLAN & PROFILE ST. JOHNS (STA 86+00 TO 91+00)
56	PP14	PLAN & PROFILE ST. JOHNS (STA 91+00 TO 96+00)
57	PP15	PLAN & PROFILE ST. JOHNS (STA 96+00 TO 101+00)
58	PP16	PLAN & PROFILE 72ND AVE (STA 77+00 TO 82+00)
59	PP17	PLAN & PROFILE 72ND AVE (STA 82+00 TO 87+00)
60	PP18	PLAN & PROFILE 72ND AVE (STA 87+00 TO 92+00)
61	PP19	PLAN & PROFILE 72ND AVE (STA 92+00 TO 97+00)
62	PP20	PLAN & PROFILE 72ND AVE (STA 97+00 TO 102+00)
63	PP21	PLAN & PROFILE 72ND AVE (STA 102+00 TO E.O.P.)
64	PP22	PLAN & PROFILE 53RD AVE (STA 0+00 TO 3+00)
65	PP23	PLAN & PROFILE 65TH AVE (STA 0+00 TO 3+00)
66	PP24	PLAN & PROFILE 99TH ST (STA 0+00 TO 3+00)
67	PP25	PLAN & PROFILE 109TH ST (STA 10+00 TO 15+00)
68	PP26	PLAN & PROFILE 109TH ST (STA 15+00 TO 20+00)
69	DWY1	DRIVEWAY PLAN
70	DWY2	DRIVEWAY PLAN
71	DWY3	DRIVEWAY PLAN
72	DP1	DRAINAGE PLAN ST. JOHNS (B.O.P. TO STA 16+00)
73	DP2	DRAINAGE PLAN ST. JOHNS (STA 16+00 TO 21+00)
74	DP3	DRAINAGE PLAN ST. JOHNS (STA 21+00 TO 26+00)
75	DP4	DRAINAGE PLAN ST. JOHNS (STA 26+00 TO 31+00)
76	DP5	DRAINAGE PLAN ST. JOHNS (STA 31+00 TO 36+00)
77	DP6	DRAINAGE PLAN ST. JOHNS (STA 36+00 TO 41+00)
78	DP7	DRAINAGE PLAN ST. JOHNS (STA 41+00 TO 46+00)
79	DP8	DRAINAGE PLAN ST. JOHNS (STA 46+00 TO 51+00)
80	DP9	DRAINAGE PLAN ST. JOHNS (STA 51+00 TO 56+00)
81	DP10	DRAINAGE PLAN ST. JOHNS (STA 56+00 TO 61+00)
82	DP11	DRAINAGE PLAN ST. JOHNS (STA 61+00 TO 66+00)
83	DP12	DRAINAGE PLAN ST. JOHNS (STA 66+00 TO 71+00)
84	DP13	DRAINAGE PLAN ST. JOHNS (STA 71+00 TO 76+00)
85	DP14	DRAINAGE PLAN ST. JOHNS (STA 76+00 TO 81+00)
86	DP15	DRAINAGE PLAN ST. JOHNS (STA 81+00 TO 86+00)
87	DP16	DRAINAGE PLAN 72ND AVE (STA 77+00 TO 82+00)
88	DP17	DRAINAGE PLAN 72ND AVE (STA 82+00 TO 87+00)
89	DP18	DRAINAGE PLAN 72ND AVE (STA 87+00 TO 92+00)
90	DP19	DRAINAGE PLAN 72ND AVE (STA 92+00 TO 97+00)
91	DP20	DRAINAGE PLAN 72ND AVE (STA 97+00 TO 102+00)
92	DP21	DRAINAGE PLAN 72ND AVE (STA 102+00 TO E.O.P.)
93	DP22	DRAINAGE PLAN 53RD AVE (STA 0+00 TO 3+00)
94	DP23	DRAINAGE PLAN 65TH AVE (STA 0+00 TO 3+00)
95	DP24	DRAINAGE PLAN 99TH ST (STA 0+00 TO 3+00)
96	DP25	DRAINAGE PLAN 109TH ST (STA 10+00 TO 15+00)
97	DP26	DRAINAGE PLAN 109TH ST (STA 15+00 TO 20+00)
98	DP101	DRAINAGE PLAN 110TH ST (STA 0+00 TO 5+00)
99	DP102	DRAINAGE PLAN 110TH ST (STA 5+00 TO 10+00)
100	DP103	DRAINAGE PLAN 110TH ST (STA 10+00 TO 15+00)
101	DP104	DRAINAGE PLAN 110TH ST (STA 15+00 TO 20+00)
102	DP105	DRAINAGE PLAN 110TH ST (STA 20+00 TO 23+00)
103	DP106	DRAINAGE PLAN 110TH ST (STA 23+00 TO 28+00)
104	DP201	LALONDE CREEK STREAM CROSSING
105	I01	INTERSECTION PLAN
106	I02	INTERSECTION PLAN
107	SS01	SIGNING & STRIPING PLAN
108	SS02	SIGNING & STRIPING PLAN
109	SS03	SIGNING & STRIPING PLAN
110	STR3	INTERIM INTERSECTION STRIPING PLAN
111	STR4	INTERSECTION SIGNING & STRIPING PLAN
112	TS1	TRAFFIC SIGNAL PLAN
113	TS2	SIGNAL POLE DETAILS
114	TS3	DETECTOR LOGIC SCHEMATIC
115	TS4	SIGNAL SYSTEM DETAILS
116	B01	RETAINING WALL 1
117	B02	RETAINING WALL 1 AND 2
118	B03	RETAINING WALL 3
119	B04	RETAINING WALL 4
120	B05	RETAINING WALL 5
121	B06	RETAINING WALL 6
122	B07	RETAINING WALL 7
123	B08	RETAINING WALL SECTIONS 1
124	B09	RETAINING WALL SECTIONS 2
125	B10	RETAINING WALL SECTIONS 3
126	B11	SOUNDWALL PLAN AND ELEVATIONS #1
127	B12	SOUNDWALL PLAN AND ELEVATIONS #2
128	B13	SOUNDWALL PLAN AND ELEVATIONS #2
129	B14	SOUNDWALL PLAN AND ELEVATIONS #2
130	B15	SOUNDWALL PLAN AND ELEVATIONS #3
131	B16	SOUNDWALL PLAN AND ELEVATIONS #3
132	B17	SOUNDWALL PLAN AND ELEVATIONS #4
133	B18	SOUNDWALL PLAN AND ELEVATIONS #4
134	B19	SOUNDWALL PLAN AND ELEVATIONS #5
135	B20	SOUNDWALL PLAN AND ELEVATIONS #5
136	B21	SOUNDWALL PLAN AND ELEVATIONS #5
137	B22	SOUNDWALL PLAN AND ELEVATIONS #6
138	B23	SOUNDWALL PLAN AND ELEVATIONS #7
139	B24	SOUNDWALL PLAN AND ELEVATIONS #7
140	B25	SOUNDWALL PLAN AND ELEVATIONS #7
141	B26	SOUNDWALL DETAIL AND GENERAL NOTES
142	LD1	LANDSCAPE PLAN
143	LD2	LANDSCAPE PLAN
144	LD3	LANDSCAPE PLAN
145	LD4	LANDSCAPE PLAN
146	LD5	LANDSCAPE PLAN
147	LD6	LANDSCAPE PLAN
148	LD7	LANDSCAPE PLAN
149	LD8	LANDSCAPE PLAN
150	LD9	LANDSCAPE PLAN
151	LD10	LANDSCAPE DETAILS

COMMISSIONERS:

BETTY SUE MORRIS, Chair
MARC BOLDT, Commissioner
STEVEN J. STUART, Commissioner

proud past, promising future
CLARK COUNTY
WASHINGTON

DEPARTMENT OF
PUBLIC WORKS

ENGINEERING PROGRAM- DESIGN SECTION

Fed. Aid No.
STPUL 4347(004)

ENG 2001-00162

MICHAEL M. EMBICK
STATE OF WASHINGTON
29030
REGISTERED
PROFESSIONAL ENGINEER
EXPIRES: MAY 26, 2007

JOHN MILNE
STATE OF WASHINGTON
31148
REGISTERED
PROFESSIONAL ENGINEER
EXPIRES: JULY 7, 2007

PRELIMINARY
99% REVIEW SET

Quality Assurance	Project Manager	Public Works Director/ County Engineer
DATE:	DATE:	DATE:
Larry Maddux, P.L.S.	Carolyn Heniges	Peter Capell, P.E.

proud past, promising future
CLARK COUNTY
WASHINGTON

Recommended for Approval

Grading _____ Erosion _____

Storm Water Plan _____

Development Review Manager _____ Date

N:\CIP\PROJECTS\301422-STJohns-50thTo72nd\DESIGN\DWGS\STJcov.dwg, 8/17/2005 8:08:00 AM, milnej

SUMMARY OF QUANTITIES

QUANT	UNIT	BID ITEM DESCRIPTION
1	L.S.	MOBILIZATION
1	EST.	MINOR CHANGE
8400	HOUR	TRAFFIC CONTROL LABOR
450	HOUR	TRAFFIC CONTROL SUPERVISOR
1	L.S.	TEMPORARY TRAFFIC CONTROL DEVICES
200	S.F.	CONSTRUCTION SIGNS CLASS "A"
100	L.F.	TYPE III BARRICADE
1	L.S.	CLEARING AND GRUBBING
1	EST.	ROADSIDE CLEANUP-FORCE ACCOUNT
1	L.S.	REMOVAL OF STRUCTURES AND OBSTRUCTIONS
30640	C.Y.	ROADWAY EXCAVATION (INCL HAUL)
22150	C.Y.	EMBANKMENT COMPACTION
8000	C.Y.	UNSUITABLE FOUNDATION EXCAVATION (INCL. HAUL)
24628	TON	GRAVEL BORROW (INCL. HAUL)
1300	L.F.	SAWCUT EXISTING (ASPHALT) PAVEMENT
750	MGAL	WATER
20000	L.F.	CONSTRUCTION GEOTEXTILE FOR TEMPORARY SILT FENCE
46744	TON	CRUSHED SURFACING BASE COURSE
6400	TON	BALLAST (INCL. HAUL)
12935	TON	ASPHALT CONCRETE PAVEMENT CL. A
16629	TON	ASPHALT CONCRETE PAVEMENT CL. E
163	S.Y.	PLANING BITUMINOUS PAVEMENT
629	S.Y.	ASPHALT CONCRETE APPROACH CL A
1272	S.Y.	CEMENT CONCRETE APPROACH, 3-DAY
1000	S.F.	GEOGRID SOIL REINFORCEMENT FABRIC
4650	S.F.	MODULAR/SEGMENTAL BLOCK RETAINING WALL (INCL. CAP UNIT)
23760	S.F.	SOUND WALL
511	S.F.	CIP RETAINING/SOUND WALL
1058	S.F.	SOLDIER PILE RETAINING/SOUND WALL
1336	S.F.	WIRE MESH RETAINING/SOUND WALL
400	S.F.	BLOCK RETAINING/SOUND WALL
825	S.Y.	GEOGRID SOIL REINFORCEMENT FABRIC (FOR WALL)
13236	L.F.	TRENCH SAFETY SYSTEM
418	L.F.	DUCTILE IRON PIPE 10 IN. DIAM.
165	L.F.	DUCTILE IRON PIPE 12 IN. DIAM.
140	L.F.	ST. STR. PLATE PIPE ARCH, 12 GAGE, 6 FT. 1 IN. X 4 FT. 7 IN. SPAN
1	L.S.	DEWATERING, WMA 1
1	L.S.	DEWATERING, WMA2
1	L.S.	DEWATERING, WMA3
1	L.S.	DEWATERING, 110TH ST. STORM SEWER
1673	L.F.	STORM SEWER PIPE, 10 IN. DIAM.
2507	L.F.	STORM SEWER PIPE, 12 IN. DIAM.
1921	L.F.	STORM SEWER PIPE, 18 IN. DIAM.
905	L.F.	STORM SEWER PIPE, 24 IN. DIAM.
2210	L.F.	STORM SEWER PIPE, 30 IN. DIAM.
1897	L.F.	STORM SEWER PIPE, 36 IN. DIAM.
2625	L.F.	STORM SEWER PIPE, 42 IN. DIAM.
101	L.F.	CLASS V REINF. CONC. STORM SEWER PIPE, 42 IN. DIAM. (JACKED)
104	L.F.	BOX CULVERT 6FT X 6FT (DESIGN/BUILD)
10	EACH	MANHOLE 48 IN. DIAM. TYPE 1
16	EACH	MANHOLE 48 IN. DIAM. TYPE 3
6	EACH	MANHOLE 60 IN. DIAM. TYPE 3
24	EACH	MANHOLE 72 IN. DIAM. TYPE 1
14	EACH	MANHOLE 72 IN. DIAM. TYPE 3
1	EACH	MANHOLE 84 IN. DIAM. TYPE 2
22	EACH	CATCH BASIN
50	EACH	CONCRETE COMBINATION CURB INLET TYPE 1
15	EACH	CONCRETE COMBINATION CURB INLET TYPE 2
1	EACH	SIDEWALK CHASE
2	EACH	SPECIAL CURB INLET
1	EACH	CATCH BASIN TYPE 2
1	EACH	MODIFIED CATCH BASIN TYPE 2 (84 IN. DIAM, FLOW SPLITTER)
1	EACH	CONCRETE DITCH INLET
40	EACH	ADJUST MANHOLE/CATCH BASIN/INLET/DRYWELL METHOD 1
38	EACH	ADJUST WATER/GAS VALVE RIM, COVER & FRAME
109000	C.Y.	STORMWATER FACILITY EXCAVATION (INCL. HAUL)
46	ACRE	WETLAND PLANTING
19	C.Y.	REINFORCED CONCRETE FOR HEADWALL/WINGWALL STRUCTURE
18	C.Y.	STREAMBED ROCK
116	C.Y.	STREAMBED GRAVEL
20	L.F.	ROCK WEIRS
288	C.Y.	LIGHT, LOOSE RIPRAP
46780	S.F.	OPEN CELL SYSTEM AND POROUS PAVERS
4	ACRE	EROSION CONTROL SEEDING AND MULCHING
128	S.Y.	EROSION CONTROL BLANKET (PERMANENT)
2	EACH	STABILIZED CONSTRUCTION ENTRANCE
2	EACH	TIRE WASH
92	EACH	STORM DRAIN INLET PROTECTION
150	HOUR	EROSION PREVENTION AND SEDIMENT CONTROL LEAD
1	L.S.	SPILL PREVENTION PLAN
3520	C.Y.	COMPOST AMENDED TOPSOIL
880	C.Y.	BARK OR WOOD CHIP MULCH
1	L.S.	LANDSCAPE RESTORATION
75	EACH	PSIPE 1-1/2 IN. CALIPER TREES (Acer platanoides "Crimson Sentry")
90	EACH	PSIPE 1-1/2 IN. CALIPER TREES (Prunus subhirtella "Autumn Flowering Cherry")
1124	EACH	PSIPE - SHRUB, DECIDUOUS, 1 GAL. (Spiraea japonica "Goldflame")
326	EACH	PSIPE - SHRUB, EVERGREEN, 1 GAL. (Pieris japonica "Forest Flame")
312	EACH	PSIPE - SHRUB, EVERGREEN, 2 GAL. (Viburnum davidii "David virbumum")
1100	EACH	PSIPE GROUNDCOVER 4 IN. POT (Arctostaphylos uva-ursi "Kinnikinnick")
10019	L.F.	CEMENT CONC. BARRIER CURB
18984	L.F.	CEMENT CONC. BARRIER CURB AND GUTTER
45	L.F.	EXTRUDED CURB, TYPE 6 (CEMENT CONCRETE)
1945	L.F.	TYPE C PRECAST TRAFFIC CURB
3412	L.F.	FENCE RELOCATION
6860	L.F.	COATED CHAIN LINK FENCE - TYPE 1
5	EACH	DOUBLE 14 FT. COATED CHAIN LINK GATE
12610	S.Y.	CEMENT CONCRETE SIDEWALK
17	EACH	MAILBOX SUPPORT, TYPE 1
1	EACH	MAILBOX SUPPORT, TYPE 2
1	EACH	TRAFFIC SIGNAL SYSTEM (ST. JOHNS RD/NE 72ND AVE)

PRELIMINARY

LEGEND

- ROW LINE
- NEW EDGE OF PAVEMENT
- NEW CURB LINE
- NEW CENTER LINE
- NEW FENCE LINE
- NEW STORM DRAIN OR CULVERT
- NEW FILL LIMITS
- NEW CUT LIMITS
- SAWCUT LINE
- PERMANENT SLOPE EASEMENT
- NEW SILT FENCE
- EXISTING EDGE OF PAVEMENT
- EXISTING CURB LINE
- EXISTING CENTER LINE
- EXISTING FENCE LINE
- EXISTING TELEPHONE LINE
- EXISTING WATER LINE
- EXISTING UNDERGROUND ELECTRIC
- EXISTING SANITARY SEWER LINE
- EXISTING STORM DRAINAGE
- EXISTING GAS LINE
- EXISTING CULVERT
- EXISTING DITCH CENTER LINE
- EXISTING GUARDRAIL

SYMBOLS

- NEW CATCH BASIN (CB)
- NEW MANHOLE (MH)
- NEW CURB INLET (CI)
- NEW COMBINATION CURB INLET (CCI)
- NEW MAIL BOX
- NEW HANDICAP RAMP
- CURVE TABLE
- EXISTING TRANSFORMER
- EXISTING ELEC TOWER
- EXISTING SANITARY SEWER MH
- EXISTING FIRE HYDRANT
- EXISTING CLEAN OUT
- EXISTING GAS VALVE
- EXISTING WATER METER
- EXISTING WATER VALVE
- EXISTING SIGNAL POLE
- EXISTING TELEPHONE VAULT
- EXISTING TELEVISION BOX
- EXISTING WELL
- EXISTING BRUSH LINE
- EXISTING HEDGE
- EXISTING CURB INLET (CI)
- EXISTING CATCH BASIN (CB)
- EXISTING STORM MH
- EXISTING MISC MH
- EXISTING SHRUB
- EXISTING CONIFEROUS TREE
- EXISTING DECIDUOUS TREE
- EXISTING SIGN
- EXISTING DECIDUOUS TREE
- EXISTING J BOX
- EXISTING TELEPHONE MANHOLE
- EXISTING TELEPHONE POLE
- EXISTING LIGHT
- EXISTING GUY ANCHOR
- EXISTING POWER POLE
- EXISTING MAIL BOX
- EXISTING TELEPHONE PEDESTAL
- EXISTING SPRINKLER HEAD
- TRAVERSE POINT
- TEST HOLE

DESIGNED	ME/JM
DRAWN	KB/RK
CRP	301422
HOR.	SEE SHEET
VERT.	SEE SHEET
DATE	07/31/05
DWG:	SQ1
SHEET	2 OF 151

CALL 48 HOURS BEFORE YOU DIG 1-800-553-4344 "It's the Law" NORTHWEST UTILITIES NOTIFICATION CENTER

STEVEN M. EMMERSON STATE OF WASHINGTON 26030 REGISTERED PROFESSIONAL ENGINEER EXPIRES: MAY 26, 2007

ENGINEERING PROGRAM
DESIGN SECTION

ST JOHNS ROAD (NE 50TH AVE TO NE 72ND AVE)
SUMMARY OF QUANTITIES AND LEGEND

proud past, promising future

CLARK COUNTY WASHINGTON

n:\CIPPROJECTS\301422-STJohns-50thTo72nd\DESIGN\DWGS\SQ01.dwg, 7/27/2005 2:49:04 PM, kerlinr

PRELIMINARY

LEGEND

PP5:	PLAN & PROFILE/DRAINAGE PLAN AND PROFILE
DP101:	DRAINAGE PLAN AND PROFILE (OUTFALL PIPE)
WM1G1:	WETLAND MITIGATION AREA; GRADING PLAN
WM1S1:	WETLAND MITIGATION AREA; STAKING PLAN
WM1P1:	WETLAND MITIGATION AREA; PLANTING PLAN

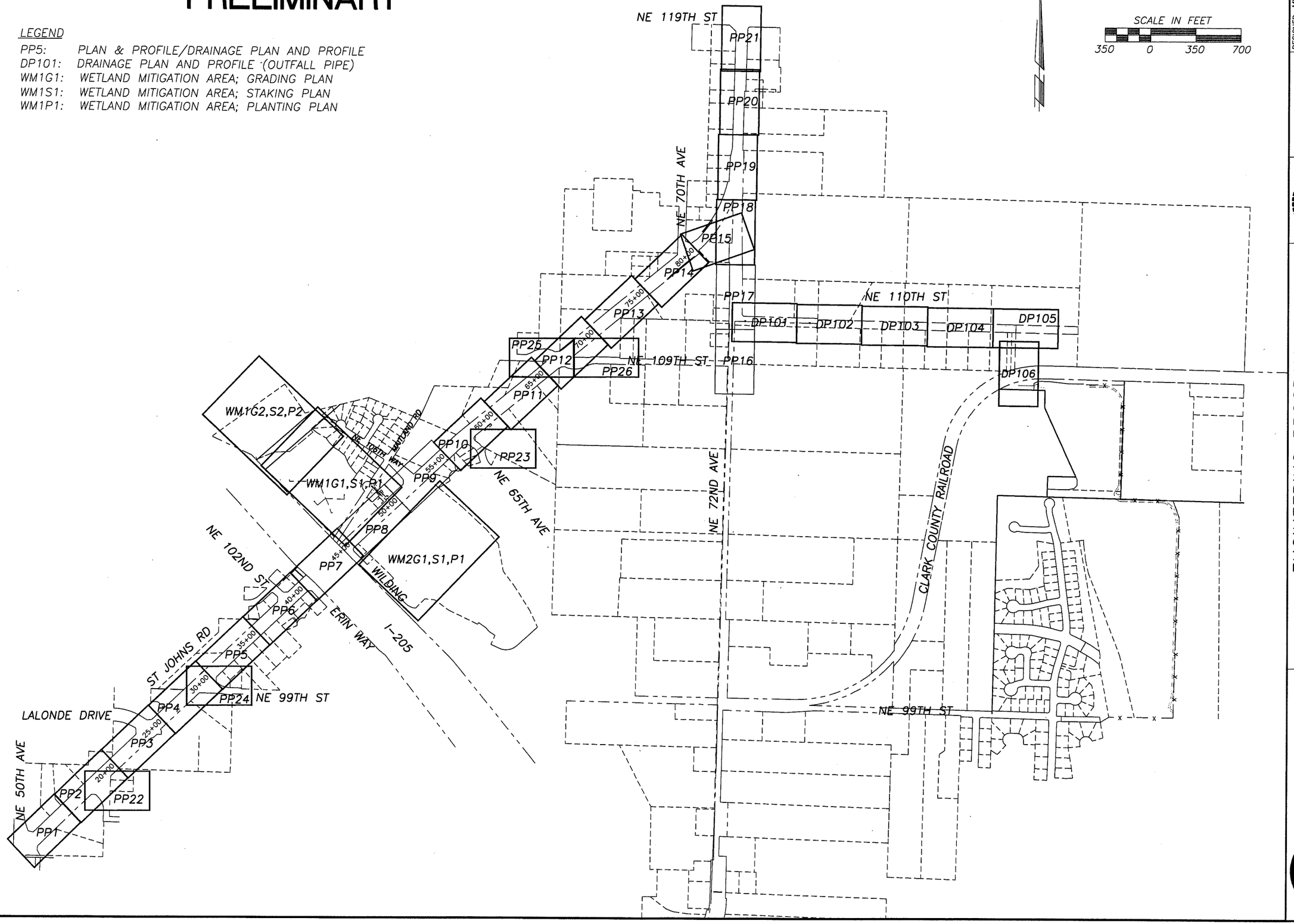

DESIGNED ME/JM
DRAWN KB/RK
CRP 301422
HOR. SEE SHEET
VERT. SEE SHEET
DATE 07/31/05
DWG: LAY1
SHEET 3 OF 151

CALL 48 HOURS BEFORE YOU DIG
1-800-553-4344
"It's the Law"
NORTHWEST UTILITIES NOTIFICATION CENTER

STATE OF WASHINGTON
MICHAEL E. MERRICK
29030
REGISTERED PROFESSIONAL ENGINEER
EXPIRES: MAY 26, 2005

ENGINEERING PROGRAM
DESIGN SECTION

ST JOHNS ROAD (NE 50TH AVE TO NE 72ND AVE)
LAYOUT SHEET

proud past, promising future
CLARK COUNTY
WASHINGTON

N:\CIP\PROJECTS\301422-STJohns-50thTo72nd\DESIGN\DWGS\SILAY.dwg, 8/17/2005 8:09:35 AM, milnej

PRELIMINARY

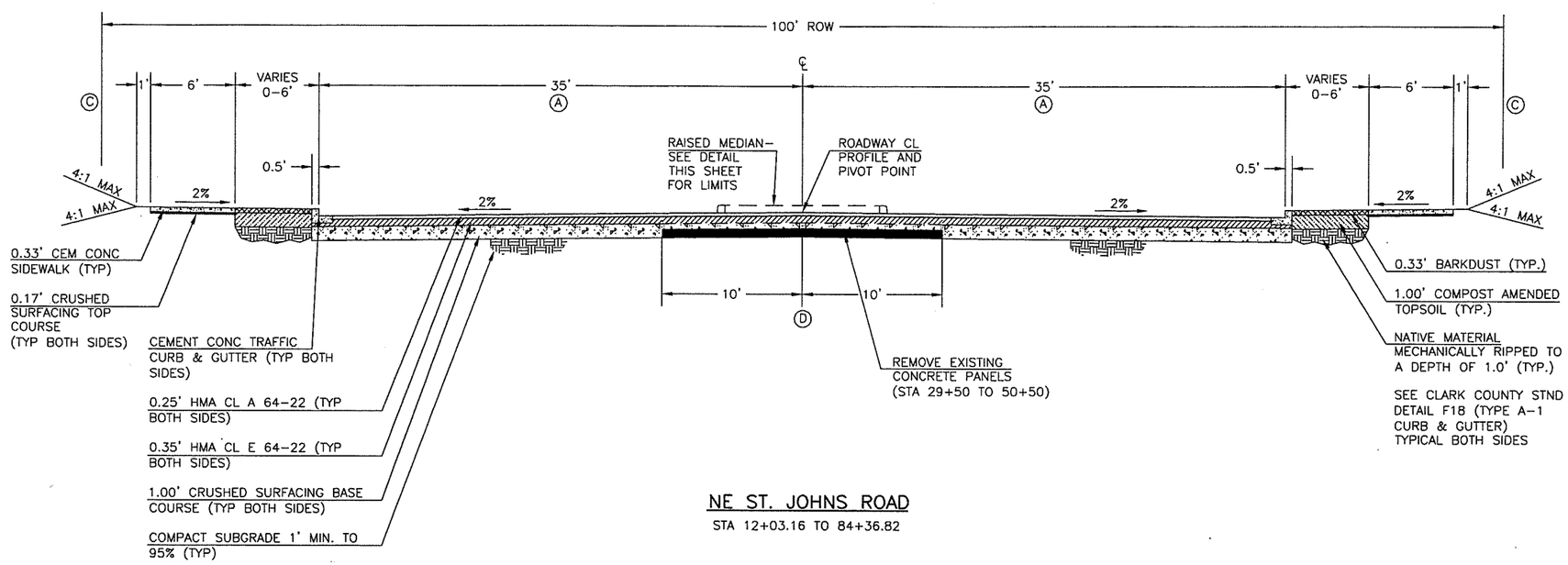

NE ST. JOHNS ROAD

STA 12+03.16 TO 84+36.82

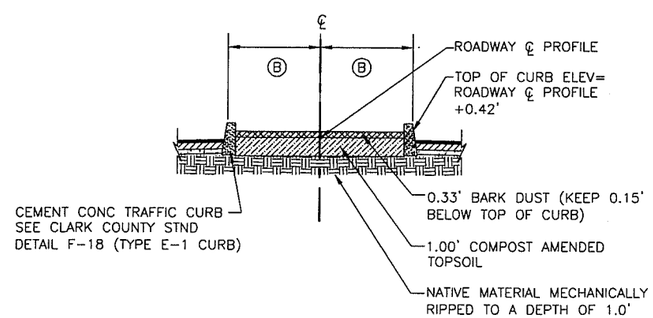

RAISED MEDIAN SECTION

NE ST. JOHNS ROAD

STA 14+60.49 TO 15+84.51
STA 21+07.83 TO 21+50.51
STA 27+68.25 TO 30+20.00
STA 33+60.49 TO 36+09.51
STA 44+38.49 TO 44+87.50
STA 48+37.00 TO 49+79.51
STA 60+24.92 TO 64+71.51
STA 70+31.49 TO 80+92.10

Ⓐ 35' TYPICAL WIDTH. SEE PLAN SHEETS FOR TAPER WIDTHS AND LENGTHS.

Ⓑ 5.5' TYPICAL WIDTH. SEE PLAN SHEETS FOR TAPER WIDTHS AND LENGTHS.

Ⓒ SEE PLAN SHEET AND WALL DETAIL SHEET FOR RETAINING WALL LOCATIONS.

Ⓓ APPROX STA 44+50 TO 55+50 (ST. JOHNS ROAD) OVEREXCAVATE 3' BELOW SUBGRADE. REPLACE WITH BALLAST AND GEOGRID.

DESIGNED	ME/JM
DRAWN	KB/RK
CRP	301422
HOR.	SEE SHEET
VERT.	SEE SHEET
DATE	07/31/05
DWG:	TS1
SHEET	4 OF 151

CALL 48 HOURS BEFORE YOU DIG 1-800-553-4344 "It's the Law" NORTHWEST UTILITIES NOTIFICATION CENTER

MICHAEL M. KABRICK STATE OF WASHINGTON 29030 REGISTERED PROFESSIONAL ENGINEER EXPIRES: MAY 28, 2007

ENGINEERING PROGRAM
DESIGN SECTION

ST JOHNS ROAD (NE 50TH AVE TO NE 72ND AVE)
TYPICAL SECTIONS

proud past, promising future

CLARK COUNTY WASHINGTON

n:\CIP\PROJECTS\301422-STJohns-50thTo72nd\DESIGN\DWGS\TS1-2.dwg, 7/27/2005 2:50:38 PM, kerlinr

PRELIMINARY

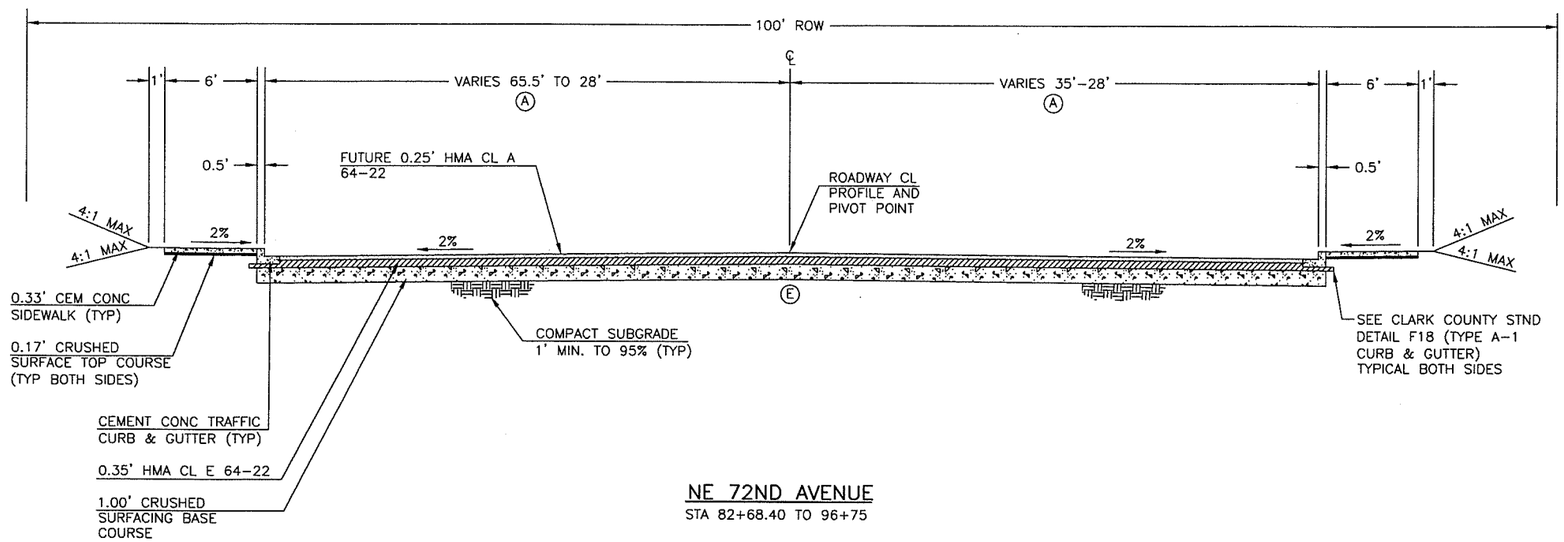

NE 72ND AVENUE
STA 82+68.40 TO 96+75

Ⓐ 35' TYPICAL WIDTH. SEE PLAN SHEETS FOR TAPER WIDTHS AND LENGTHS.

Ⓔ APPROX STA XX TO XX (NE 72ND AVE) OVEREXCAVATE MIN 1' BELOW SUBGRADE. REPLACE WITH BALLAST AND GEOGRID.

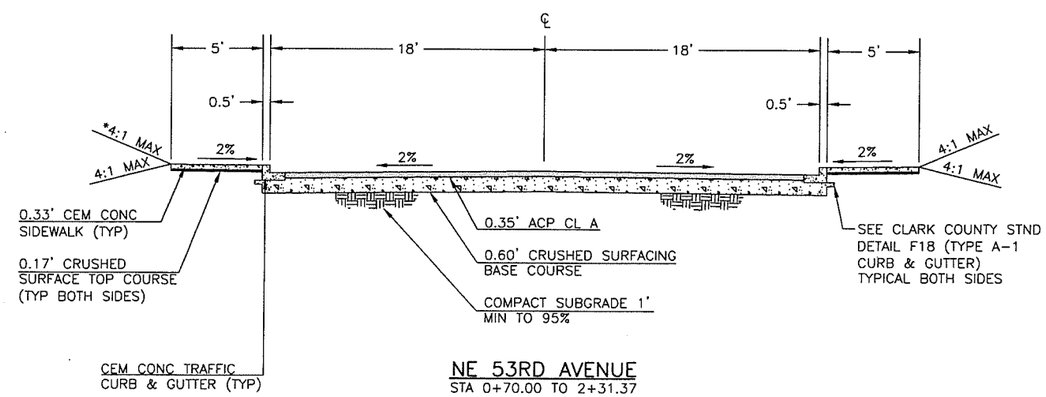

*2:1 CUT SLOPES
ON NE 65TH AVE

NE 53RD AVENUE
STA 0+70.00 TO 2+31.37

NE 65TH AVENUE
STA 0+70.00 TO 1+45

NE 70TH AVENUE
STA 0+60 TO 1+24.30

NE 99TH STREET
STA 0+70.00 TO 2+37.40

NE 109TH STREET
STA 10+15 TO 16+95

DESIGNED	ME/JM
DRAWN	KB/RK
CRP	301422
HOR.	SEE SHEET
VERT.	SEE SHEET
DATE	07/31/05
DWG:	TS2
SHEET	5 OF 151

CALL 48 HOURS BEFORE YOU DIG
1-800-553-4344
"It's the Law"
NORTHWEST UTILITIES NOTIFICATION CENTER

EXPIRES: MAY 28, 2007

ENGINEERING PROGRAM
DESIGN SECTION

ST JOHNS ROAD (NE 50TH AVE TO NE 72ND AVE)
TYPICAL SECTIONS

proud past, promising future
CLARK COUNTY
WASHINGTON

n:\CIP\PROJECTS\301422-STJohns-50thTo72nd\DESIGN\DWGS\TS1-2.dwg, 7/27/2005 2:50:50 PM, kerlinr

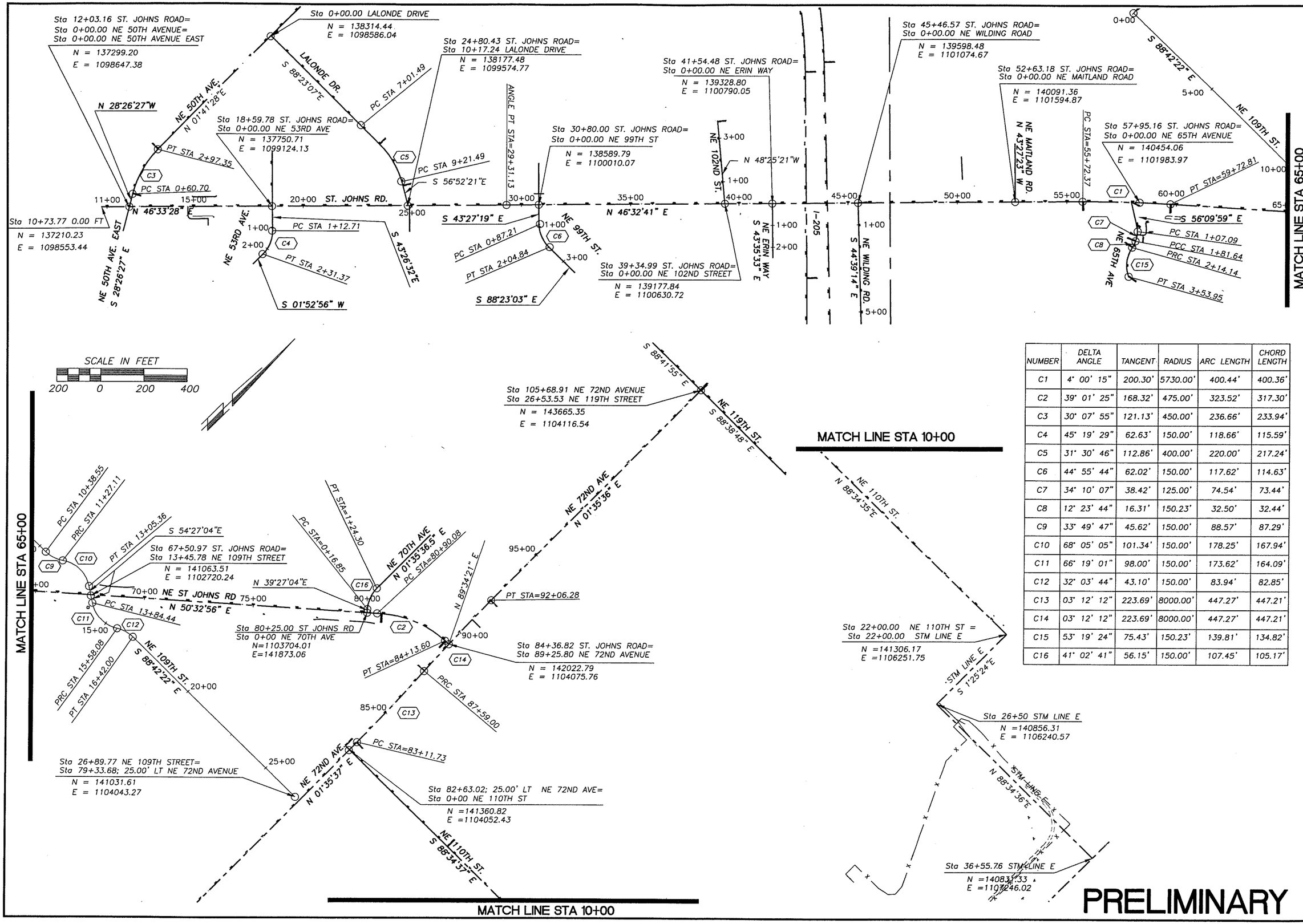

NUMBER	DELTA ANGLE	TANGENT	RADIUS	ARC LENGTH	CHORD LENGTH
C1	4° 00' 15"	200.30'	5730.00'	400.44'	400.36'
C2	39° 01' 25"	168.32'	475.00'	323.52'	317.30'
C3	30° 07' 55"	121.13'	450.00'	236.66'	233.94'
C4	45° 19' 29"	62.63'	150.00'	118.66'	115.59'
C5	31° 30' 46"	112.86'	400.00'	220.00'	217.24'
C6	44° 55' 44"	62.02'	150.00'	117.62'	114.63'
C7	34° 10' 07"	38.42'	125.00'	74.54'	73.44'
C8	12° 23' 44"	16.31'	150.23'	32.50'	32.44'
C9	33° 49' 47"	45.62'	150.00'	88.57'	87.29'
C10	68° 05' 05"	101.34'	150.00'	178.25'	167.94'
C11	66° 19' 01"	98.00'	150.00'	173.62'	164.09'
C12	32° 03' 44"	43.10'	150.00'	83.94'	82.85'
C13	03° 12' 12"	223.69'	8000.00'	447.27'	447.21'
C14	03° 12' 12"	223.69'	8000.00'	447.27'	447.21'
C15	53° 19' 24"	75.43'	150.23'	139.81'	134.82'
C16	41° 02' 41"	56.15'	150.00'	107.45'	105.17'

DESIGNED ME/JM
DRAWN KB/RK
CRP 301422
HOR. SEE SHEET
VERT. SEE SHEET
DATE 07/31/05
DWG: HV1
SHEET 6 OF 151

CALL 48 HOURS BEFORE YOU DIG 1-800-553-4344 "It's the Law" NORTHWEST UTILITIES NOTIFICATION CENTER

STATE OF WASHINGTON MICHAEL D. MORRICK 29030 REGISTERED PROFESSIONAL ENGINEER EXPIRES MAY 28, 2007

ENGINEERING PROGRAM
DESIGN SECTION

ST JOHNS ROAD (NE 50TH AVE TO NE 72ND AVE)
HORIZONTAL AND VERTICAL CONTROL

proud past, promising future
CLARK COUNTY WASHINGTON

n:\CIP\PROJECTS\301422-STJohns-50thTo72nd\DESIGN\DWG\SHV01.dwg, 7/27/2005 2:51:31 PM, kerlinr

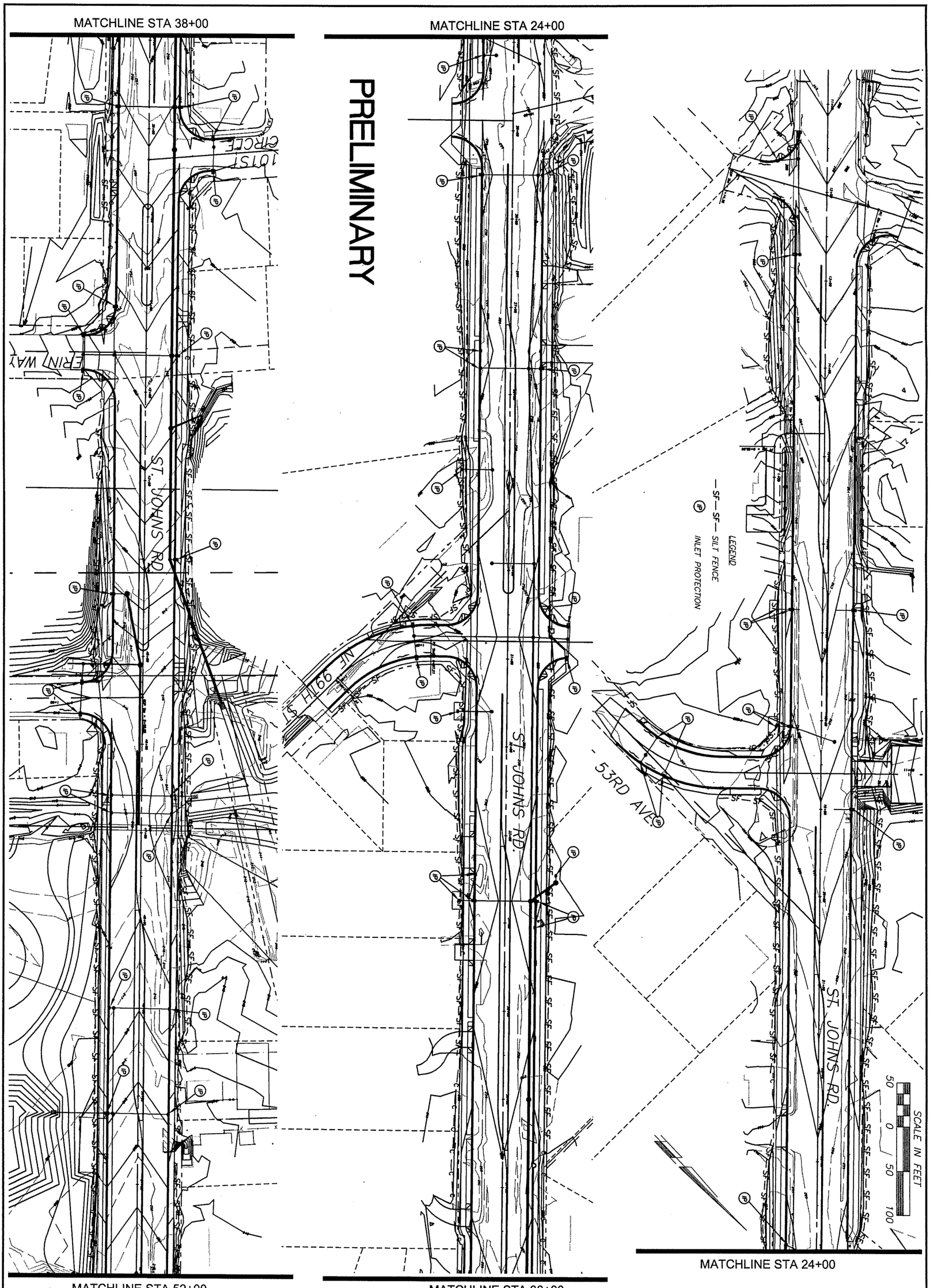

proud past, promising future

CLARK COUNTY
WASHINGTON

ENGINEERING PROGRAM
DESIGN SECTION

ST JOHNS ROAD (NE 50TH AVE TO NE 72ND AVE)
EROSION CONTROL PLAN

MICHAEL M. EMICK
STATE OF WASHINGTON
29030
REGISTERED PROFESSIONAL ENGINEER
EXPIRES: MAY 26, 2007

CALL 48 HOURS BEFORE YOU DIG
1-800-553-4344
"It's the Law"
NORTHWEST UTILITIES NOTIFICATION CENTER

DESIGNED	ME/JM
DRAWN	KB/RK
CRP	301422
HOR.	SEE SHEET
VERT.	SEE SHEET
DATE	07/31/05
DWG:	EC1
SHEET	7 OF 151

PRELIMINARY

CLARK COUNTY WASHINGTON
proud past, promising future

ENGINEERING PROGRAM
DESIGN SECTION

ST JOHNS ROAD (NE 50TH AVE TO NE 72ND AVE)
EROSION CONTROL PLAN

MICHAEL M. EMRICK
STATE OF WASHINGTON
29030
REGISTERED PROFESSIONAL ENGINEER
EXPIRES: MAY 28, 2007

CALL 48 HOURS BEFORE YOU DIG
1-800-553-4344
"It's the Law"
NORTHWEST UTILITIES NOTIFICATION CENTER

DESIGNED	ME/JM
DRAWN	KB/RK
CRP	301422
HOR.	SEE SHEET
VERT.	SEE SHEET
DATE	07/31/05
DWG:	EC2
SHEET	8 OF 151

PRELIMINARY

MATCHLINE STA 79+00

NE 70TH AVE

ST JOHNS RD

NE 109TH ST

NE 72ND AVE

NE 70TH

MATCHLINE STA 86+00

MATCHLINE STA 86+00

ST. JOHNS RD./NE 72ND AVE.

SCALE IN FEET

50 0 50 100

LEGEND

—SF—SF— SILT FENCE

(IP) INLET PROTECTION

DESIGNED	ME/JM
DRAWN	KB/RK
CRP	301422
HOR.	SEE SHEET
VERT.	SEE SHEET
DATE	07/31/05
DWG:	EC3
SHEET	9 OF 151

CALL 48 HOURS BEFORE YOU DIG 1-800-553-4344 "It's the Law" NORTHWEST UTILITIES NOTIFICATION CENTER

STATE OF WASHINGTON KEVIN L. RIDDLE 29030 PROFESSIONAL ENGINEER EXPIRES MAY 26, 2007

ENGINEERING PROGRAM
DESIGN SECTION

ST JOHNS ROAD (NE 50TH AVE TO NE 72ND AVE)
EROSION CONTROL PLAN

proud past, promising future

CLARK COUNTY WASHINGTON

n:\CIP\PROJECTS\301422-STJohns-50thTo72nd\DESIGN\DWGS\EC01-3.dwg, 7/27/2005 2:53:02 PM, kerlinr

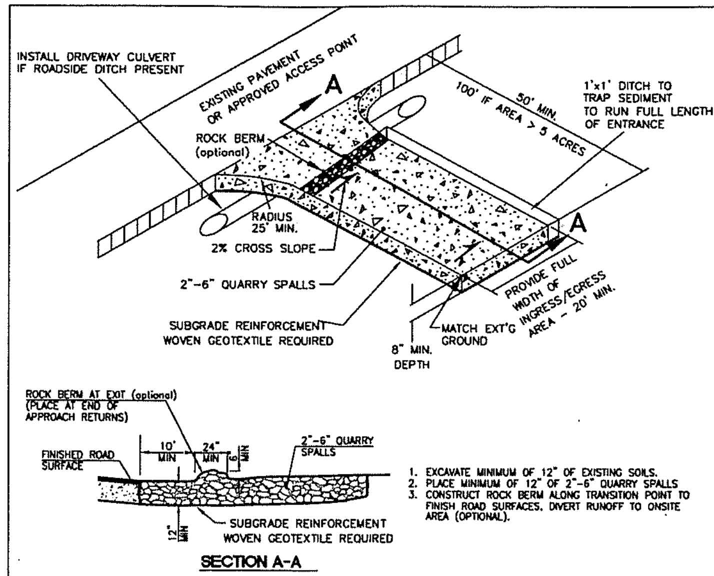

NOTES:

1. FOR DEVELOPMENT PROJECTS REVIEWED BY ENGINEERING SERVICES. NOT FOR USE WITH SINGLE FAMILY OR DUPLEX RESIDENTIAL BUILDING PERMITS. SEE BUILDING DEPT. FOR GRAVEL CONSTRUCTION ENTRANCE PLAN.
2. INSTALL WOVEN GEOTEXTILE FABRIC TO PREVENT SUB-SOIL PUMPING.
3. VEHICLE WASHDOWN AREA, IF REQUIRED, IS TO BE INSTALLED AND USED TO REMOVE SEDIMENT FROM VEHICLES THAT ARE ABOUT TO ENTER AN ESTABLISHED ROAD.
4. WASHDOWN AREA TO BE MADE UP OF CLEAN 2"- 6" QUARRY SPALLS, 1" DEEP (MIN) OVER WOVEN GEOTEXTILE FABRIC. WASHDOWN AREA TO BE FULL WIDTH OF ENTRANCE AND 50' (MIN.), AND 100' IF EXPOSED SOIL IS OVER 5 ACRES.
5. AT TIME OF PRECONSTRUCTION MEETING, THE COUNTY INSPECTOR MAY REQUIRE THE ENTRANCE TO BE PAVED TO THE EDGE OF THE RIGHT-OF-WAY PRIOR TO THE INSTALLATION OF A WASHDOWN ENTRANCE TO AVOID DAMAGE TO THE EXISTING ROADWAY.
6. THE RESPONSIBLE EROSION CONTROL INDIVIDUAL IS TO ENSURE THAT ALL VEHICLES USE THIS ENTRANCE AND ARE TO BE INSPECTED AND CLEANED OF SOILS BEFORE LEAVING PROJECT, AND THAT THE ENTRANCE IS TO BE KEPT CLEAN AT ALL TIMES.

NO.	REVISIONS	DATE	BY

DWG: E-1.DWG

Department of Public Works
CLARK COUNTY WASHINGTON
proud past, promising future

STANDARD CONSTRUCTION ENTRANCE — STANDARD E-1 PLAN No.
APPROVED — COUNTY ENGINEER — 01/01/04 DATE
DESIGNED SCH / DRAWN SCH / DATE 07/07/03

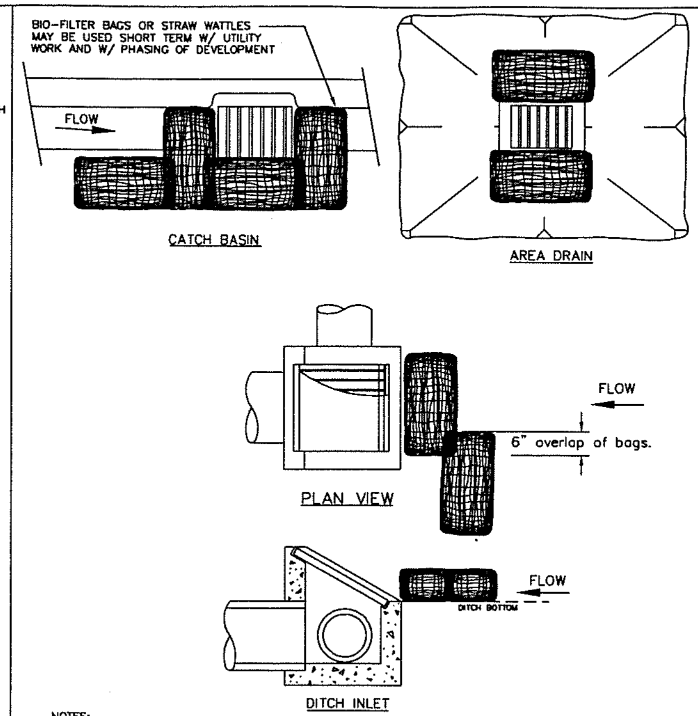

NOTES:

1. ADDITIONAL MEASURES MUST BE CONSIDERED DEPENDING ON SOIL TYPE.
2. BIO-FILTER BAGS SHOULD BE STAKED WHERE APPLICABLE USING (2) 1"x2" WOODEN STAKES OR APPROVED EQUAL PER BAG.
3. STRAW WATTLES MUST BE STABILIZED BY ATTACHING WIRE CLIPS TO THE CATCH BASIN PER MANUFACTURES SPECIFICATIONS.
4. INLET PROTECTION MUST BE REGULARLY INSPECTED BY THE EROSION CONTROL INDIVIDUAL TO INSURE PROPER PLACEMENT/FUNCTION AND MAINTENANCE.
5. SEE INLET PROTECTION NOTES STD. PLAN E-3

NO.	REVISIONS	DATE	BY

DWG: E-3c.DWG

Department of Public Works
CLARK COUNTY WASHINGTON
proud past, promising future

INLET PROTECTION TYPE 4 BIOFILTER BAGS — STANDARD E-3c PLAN No.
APPROVED — COUNTY ENGINEER — 01/01/04 DATE
DESIGNED SCH / DRAWN SCH / DATE 08/07/02

STANDARD NOTES FOR EROSION CONTROL PLAN

1. The Contractor shall install and maintain BMP's as shown and perform all actions necessary to prevent erosion, and control sediment from leaving the construction site. Site Contractor shall comply with Clark County Code Chapter 40.380.050.

2. All erosion control measures shall be in-place and in working condition prior to disturbing and exposing any soil surfaces (i.e. silt fence, construction entrance, sedimentation barriers, sedimentation traps).

3. All erosion prevention and control BMP's shall be maintained and repaired as needed to insure continued performance of their intended function. Needed repairs shall be made as soon as practicable. They are to remain in place and operational during all phases of construction. Construction activities shall not continue or resume until repairs to erosion control facilities are made and the facilities are functional. Any sediment leaving the site or discharging to a sensitive area shall be stopped and controlled immediately. Contaminated areas shall be cleaned and restored.

4. Clearing limits and work area limits shall be delineated and marked. Do not disturb more area than needed for construction requirements.

5. All sensitive or critical areas (wetlands, steep slopes, natural waterways), and buffers shall all be clearly delineated and clearly marked, and protected from sediment deposition.
6. Sediment laden runoff shall be prevented from entering all existing storm water catch basins and inlets affected by construction.

7. No exposed, bare soils shall remain unstabilized for more than two days during the period October 1 thru April 30 or for more than seven days during the period of May 1 through September 30. All disturbed soil surfaces shall be stabilized by a suitable application of "Best Management Practices".

8. Where feasible, no more than 500 feet of trench shall be open at one time. Excavated material shall be placed on the up-hill side of trenches provided it does not conflict with safety requirements.

9. Dewatering devices shall discharge into a sediment trap or sediment pond. No discharge shall be made to a paved street or stormwater collection system without first removing sediment.

10. Cut and fill slopes shall be constructed in a manner that will minimize erosion. Erosion shall be controlled and prevented by such measures as roughening the surface, installation of interceptor ditches, terracing, covering with matting, mulch or plastic sheeting. Runoff shall be prevented from entering a slope and from undercutting the base of slopes.

11. Any soil or debris transported onto roadways and sidewalks shall be removed. Deposits shall be completely removed by shoveling and/or sweeping. Washing shall not be utilized unless specifically approved in writing by the County.

12. All permanent infiltration systems shall be isolated and protected from sediment laden runoff entering to avoid risk of reducing the ability of the systems to infiltrate. Isolation and protection shall not be removed until the drainage area tributary to the system is completely stabilized.

CONTINUED ON SHEET 2

NO.	REVISIONS	DATE	BY

DWG: ECN1.DWG

Department of Public Works
CLARK COUNTY WASHINGTON
proud past, promising future

STANDARD NOTES FOR EROSION CONTOL PLAN — STANDARD ECN1 PLAN No.
APPROVED — COUNTY ENGINEER — 01/01/04 DATE
DESIGNED SCH / DRAWN SCH / DATE 06/02/03

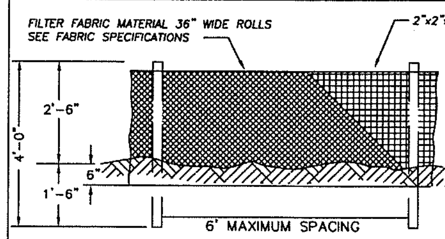

SEDIMENT FENCE FABRIC SPECIFICATIONS
(Woven Polyproylene sediment fence fabric)

PROPERTY	TEST PROCEDURE	MIN. FABRIC VALUE
Grab Tensile Strength	ASTM D-4632	180 lbs.
Grab elongation	ASTM D-4632	15%
Trapezoid Tear	ASTM D-4533	70 lbs.
Mullen Burst	ASTM D-3786	300 psi.
Puncture	ASTM D-4833	80 lbs.
Permitivity	ASTM D-4491	0.07 sec-1
Permeability	ASTM D-4491	.005 cm/sec
A.O.S.	ASTM D-4751	50 U.S. Sieve
UV Resistance(500 hrs)	ASTM D-4355	90%

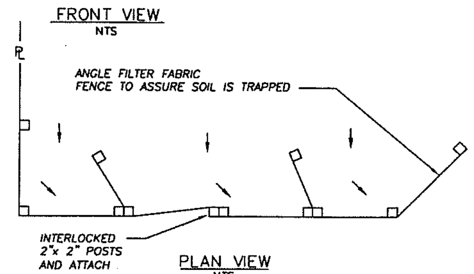

NOTES
1. THIS SEDIMENT BARRIER UTILIZES STANDARD STRENGTH OR EXTRA STRENGTH SYNTHETIC FILTER FABRICS. IT IS DESIGNED FOR SITUATIONS IN WHICH ONLY SHEET OR OVERLAND FLOWS ARE EXPECTED. (SEE FABRIC SPECIFICATIONS ABOVE)
2. BURY BOTTOM OF FILTER FABRIC 6" VERTICALLY BELOW FINISHED GRADE.
3. POST ARE TO BE 2"x2" FIR, PINE OR STEEL FENCE POSTS.
4. POST TO BE INSTALLED ON UPHILL SIDE OF SLOPE.
5. COMPACT BOTH SIDES OF FILTER FABRIC TRENCH.
6. SEDIMENT FENCE TO BE SPACED ON SLOPES PER TABLE BELOW.

INSTALL PARALLEL ALONG CONTOURS AS FOLLOWS		
% SLOPE	SLOPE	MAX. SPACING ON SLOPE
10% FLATTER	10:1 OR FLATTER	300 ft.
10>%<15	10:1>x<7.5:1	150 ft.
15>%<20	7.5:1>x<5:1	100 ft.
20>%<30	5:1>x<3.5:1	50 ft.
30>%<50	3.5:1>x<2:1	25 ft.

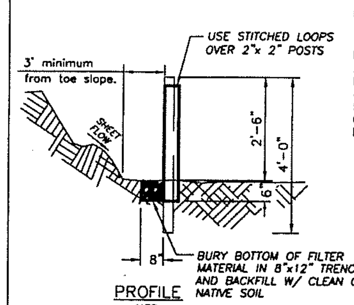

NO.	REVISIONS	DATE	BY

DWG: E-4.DWG

Department of Public Works
CLARK COUNTY WASHINGTON
proud past, promising future

STANDARD SEDIMENT FENCE — STANDARD E-4 PLAN No.
APPROVED — COUNTY ENGINEER — 01/01/04 DATE
DESIGNED SCH / DRAWN SCH / DATE 07/07/03

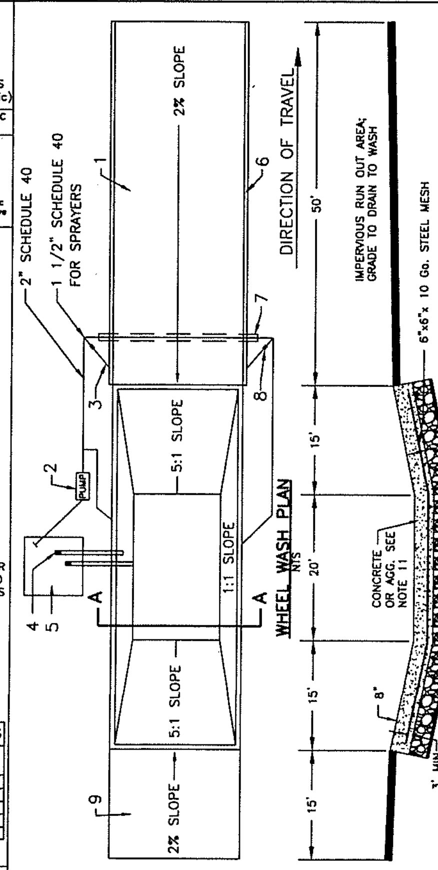

NOTES
1. ASPHALT CONSTRUCTION ENTRANCE, 6" OF ATB.
2. 3" TRASH PUMP WITH FLOATS ON SUCTION HOSE.
3. MIDPOINT SPRAY NOZZLES, IF NEEDED.
4. 6" SEWER PIPE WITH BUTTERFLY VALVES. BOTTOM PIPE IS A DRAIN. LOCATE TOP PIPE'S INVERT 1' ABOVE BOTTOM OF WHEEL WASH.
5. 8'x 8' SUMP WITH 5' OF CATCHMENT. BUILD WITH ABILITY TO CLEAN WITH BACKHOE.
6. ASPHALT CURB ON THE LOW ROAD SIDE TO DIRECT WATER BACK TO POND.
7. 6" SLEEVE UNDER ROAD.
8. BALL VALVES.
9. ATB APRON TO PROTECT FROM SPLASHING WATER.
10. CONTRACTOR TO REMOVE ACCUMULATED SEDIMENT FROM WHEEL WASH; MAY BE PIPED TO AN APPROVED SEDIMENT TRAP.
11. USE GEOTEXTILE FABRIC WITH AGGREGATE FOR A TEMPORARY WHEEL WASH.

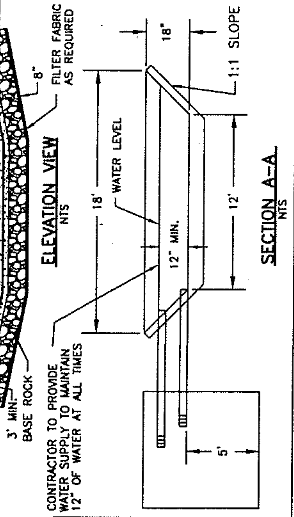

NO.	REVISIONS	DATE	BY

DWG: E-15

Department of Public Works
CLARK COUNTY WASHINGTON
proud past, promising future

WHEEL WASH — STANDARD E-15 PLAN No.
APPROVED — COUNTY ENGINEER — 01/01/04 DATE
DESIGNED SCH / DRAWN SCH / DATE 06/12/02

STANDARD NOTES FOR EROSION CONTROL PLAN (CONTINUED)

13. All conveyance channels, both temporary and permanent shall be stabilized to prevent erosion of the channel. Stabilization shall extend to areas at outlets and downstream reaches vulnerable to erosion resulting from flow discharging from the channel.

14. If BMP's shown are utilized but are insufficient to prevent sediment from reaching water bodies, adjacent properties, or public rights-of-way; additional BMP's shall be implemented immediately to prevent further encroachment of sediment.

15. Stabilized areas shall be provided for employee parking and storage of construction materials. Erodeable stockpiles of earthen materials, such as topsoil, silty and clayey soils; and landscape materials, shall be covered when not being incorporated in the work. Erosion control BMP's shall be utilized as necessary to prevent sediment laden runoff from leaving or sediment being transported from these areas from vehicle activity.

16. All pollutants other than sediment that occur during construction shall be handled and disposed of in a manner that does not cause contamination of storm water.

17. The Contractor shall keep an inspection log of the condition of the erosion control facilities. Erosion control facilities shall be inspected at least weekly and after each rainfall. The inspection log shall be kept at the project site at a designated location and shall be available for review by the County. An individual that has successfully completed the County's Erosion Control Certification course shall perform inspections and maintain the log.

18. All temporary BMP's shall be removed within 30 days after final site stabilization is achieved. Trapped sediment shall be deposited and stabilized on site. Areas disturbed resulting from removal shall be permanently stabilized.

19. Construction shall not be considered complete and acceptable until all disturbed soil surfaces have been protected from erosion with permanent landscaping, covering with impervious surfaces, restored to original undisturbed condition or permanently stabilized.

20. Vegetated stabilization and landscaping shall be fertilized, watered and maintained to insure that growth of vegetation is established and sustained.

21. During dry weather construction periods the contractor shall provide project-specific dust control measures that may include: Seeding, Mulching, Matting, Water, Tackifier, or Chemical Soil Stabilizers. The contractor shall maintain the dust control measures through dry weather periods until all disturbed areas have been stabilized. Immediately re-stabilize areas disturbed by contractor's operations or other activities (wind, water, vandalism, etc.).

22. Entry onto the construction site shall be restricted to a single approved entrance as shown on the plan.

23. Maintenance and repair of heavy equipment and vehicles which involve potential contaminants (oil,solvents,hydraulic fluid, etc.) must be conducted in a manner which prevents contamination of soils, surface water and ground water. Tarps, drip pans, or other appropriate measures shall be used as necessary.

24. Stripping, topsoil, and unsuitable material stockpiles shall be hydroseeded with "regreen wheat x wheat grass hybrid" by Hobbs and Hobkins (or approved equal). Maintenance of stockpile areas and reapplication of hydroseed covering shall be required if bare soil is present. During winter and wet weather conditions, stockpiles shall be covered with plastic sheeting per detail E-16.

SHEET 2 OF 2

NO.	REVISIONS	DATE	BY

DWG: ECN2.DWG

Department of Public Works
CLARK COUNTY WASHINGTON
proud past, promising future

STANDARD NOTES (CONTINUED) FOR EROSION CONTOL PLAN — STANDARD ECN2 PLAN No.
APPROVED — COUNTY ENGINEER — 01/01/04 DATE
DESIGNED SCH / DRAWN SCH / DATE 07/22/03

PRELIMINARY

CLARK COUNTY WASHINGTON
proud past, promising future

ENGINEERING PROGRAM
DESIGN SECTION

ST JOHNS ROAD (NE 50TH AVE TO NE 72ND AVE)
EROSION CONTROL DETAILS

EXPIRES MAY 28, 2007

CALL 48 HOURS BEFORE YOU DIG
1-800-553-4344
"It's the Law"
NORTHWEST UTILITIES NOTIFICATION CENTER

DESIGNED	ME/JM
DRAWN	KB/RK
CRP	301422
HOR.	SEE SHEET
VERT.	SEE SHEET
DATE	07/31/05
DWG:	EC4
SHEET	10 OF 151

n:\CIP\PROJECTS\301422-STJohns-50thTo72nd\DESIGN\DWGS\EC04.dwg, 7/27/2005 2:53:25 PM, kcelinr

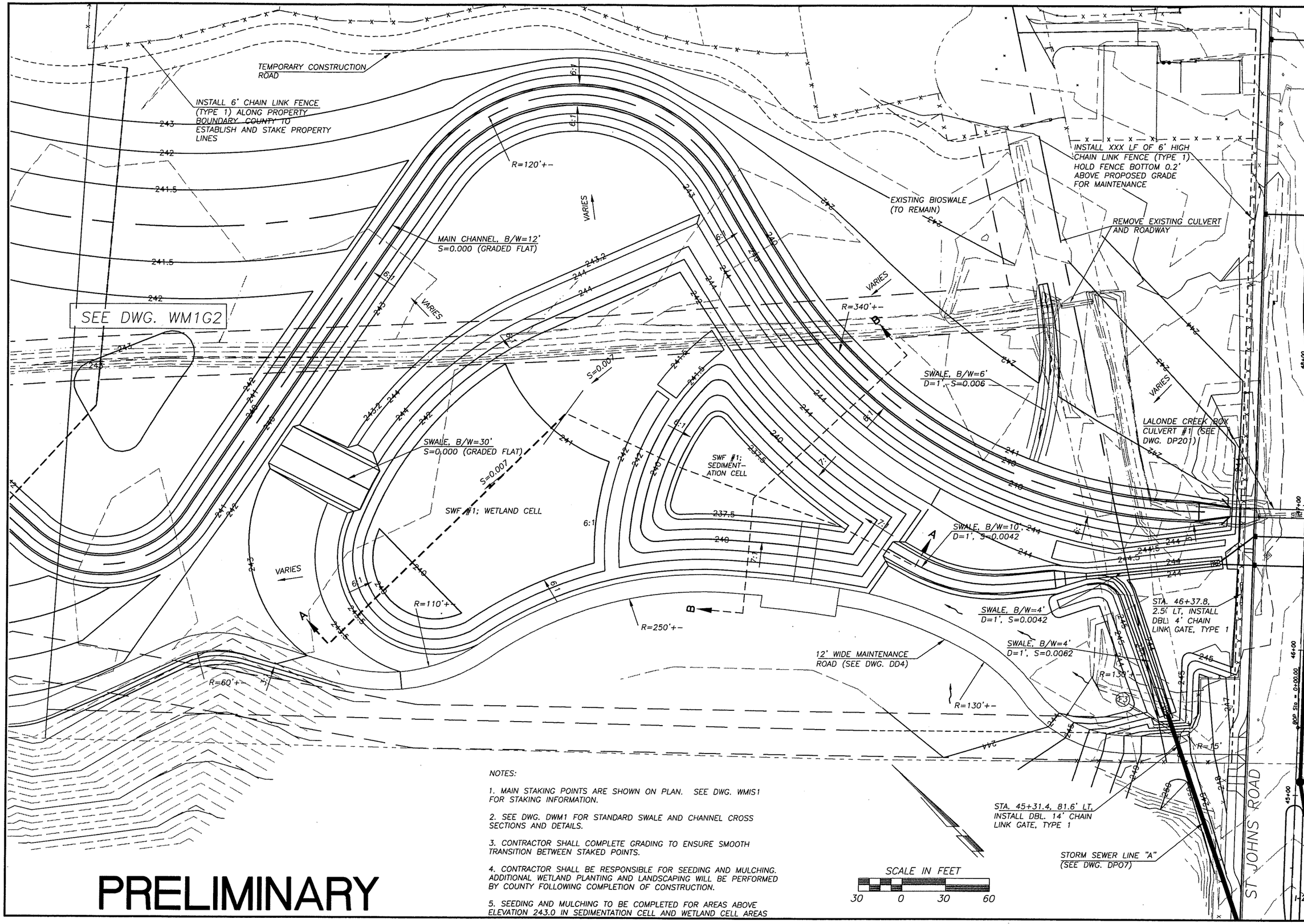

NOTES:

1. MAIN STAKING POINTS ARE SHOWN ON PLAN. SEE DWG. WMIS1 FOR STAKING INFORMATION.

2. SEE DWG. DWM1 FOR STANDARD SWALE AND CHANNEL CROSS SECTIONS AND DETAILS.

3. CONTRACTOR SHALL COMPLETE GRADING TO ENSURE SMOOTH TRANSITION BETWEEN STAKED POINTS.

4. CONTRACTOR SHALL BE RESPONSIBLE FOR SEEDING AND MULCHING. ADDITIONAL WETLAND PLANTING AND LANDSCAPING WILL BE PERFORMED BY COUNTY FOLLOWING COMPLETION OF CONSTRUCTION.

5. SEEDING AND MULCHING TO BE COMPLETED FOR AREAS ABOVE ELEVATION 243.0 IN SEDIMENTATION CELL AND WETLAND CELL AREAS

PRELIMINARY

DESIGNED ME/JM
DRAWN KB/RK
CRP 301422
HOR. SEE SHEET
VERT. SEE SHEET
DATE 07/31/05
DWG: WM1G1
SHEET 11 OF 151

CALL 48 HOURS BEFORE YOU DIG 1-800-553-4344 "It's the Law" NORTHWEST UTILITIES NOTIFICATION CENTER

STATE OF WASHINGTON JOHN WILLIE 19148 REGISTERED PROFESSIONAL ENGINEER EXPIRES: JULY 7, 2007

ENGINEERING PROGRAM
DESIGN SECTION

ST JOHNS ROAD (NE 50TH AVE TO NE 72ND AVE)
WETLAND MITIGATION #1; GRADING (SHT. 1 OF 2)

proud past, promising future

CLARK COUNTY WASHINGTON

n:\CIP\PROJECTS\301422-STJohns-50thTo72nd\DESIGN\DWGS\WM1GSP1.dwg, 7/27/2005 2:54:22 PM, keilinr

NOTES:

1. MAIN STAKING POINTS ARE SHOWN ON PLAN. SEE DWG. WM1S2 FOR STAKING INFORMATION.

2. SEE DWG. DDWM1 FOR TYPICAL SECTIONS AND DETAILS.

3. CONTRACTOR SHALL COMPLETE GRADING TO ENSURE SMOOTH TRANSITION BETWEEN STAKED POINTS.

4. CONTRACTOR SHALL BE RESPONSIBLE FOR SEEDING AND MULCHING. ADDITIONAL WETLAND PLANTING AND LANDSCAPING WILL BE PERFORMED BY COUNTY FOLLOWING COMPLETION OF CONSTRUCTION.

5. SEEDING AND MULCHING TO BE COMPLETED FOR AREAS ABOVE ELEVATION 243.0 IN SEDIMENTATION CELL AND WETLAND CELL AREAS

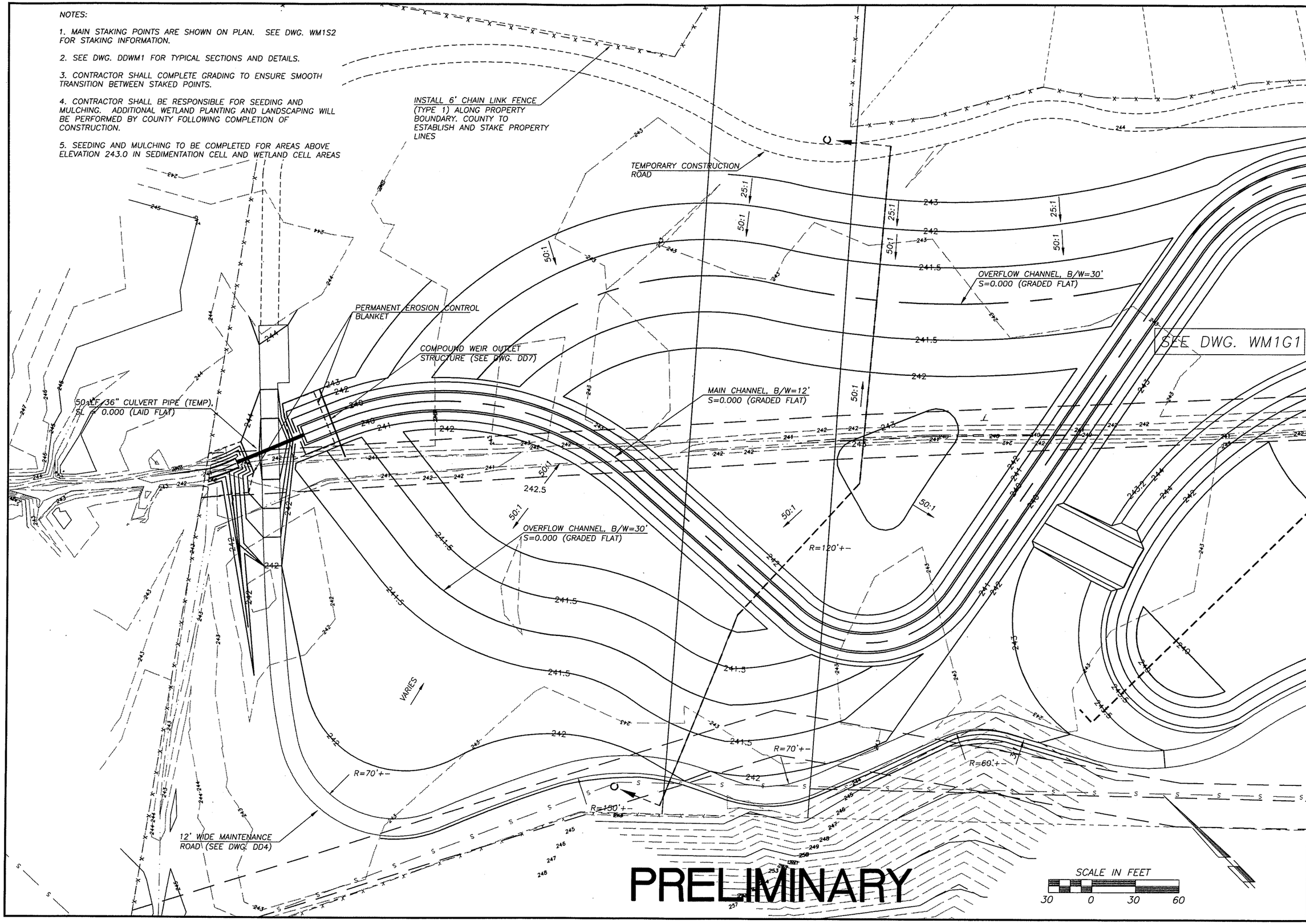

DESIGNED	ME/JM
DRAWN	KB/RK
CRP	301422
HOR.	SEE SHEET
VERT.	SEE SHEET
DATE	07/31/05
DWG:	WM1G2
SHEET	12 OF 151

CALL 48 HOURS BEFORE YOU DIG 1-800-553-4344 "It's the Law" NORTHWEST UTILITIES NOTIFICATION CENTER

STATE OF WASHINGTON WILLIAM SEMINOFF JR. 31144 REGISTERED PROFESSIONAL ENGINEER EXPIRES: JULY 2, 2007

ENGINEERING PROGRAM
DESIGN SECTION

ST JOHNS ROAD (NE 50TH AVE TO NE 72ND AVE)
WETLAND MITIGATION #1; GRADING (SHT. 2 OF 2)

proud past, promising future

CLARK COUNTY WASHINGTON

n:\CIP\PROJECTS\301422-STJohns-50thTo72nd\DESIGN\DWGS\WM1GSP2.dwg, 7/27/2005 2:54:53 PM, kerlinr

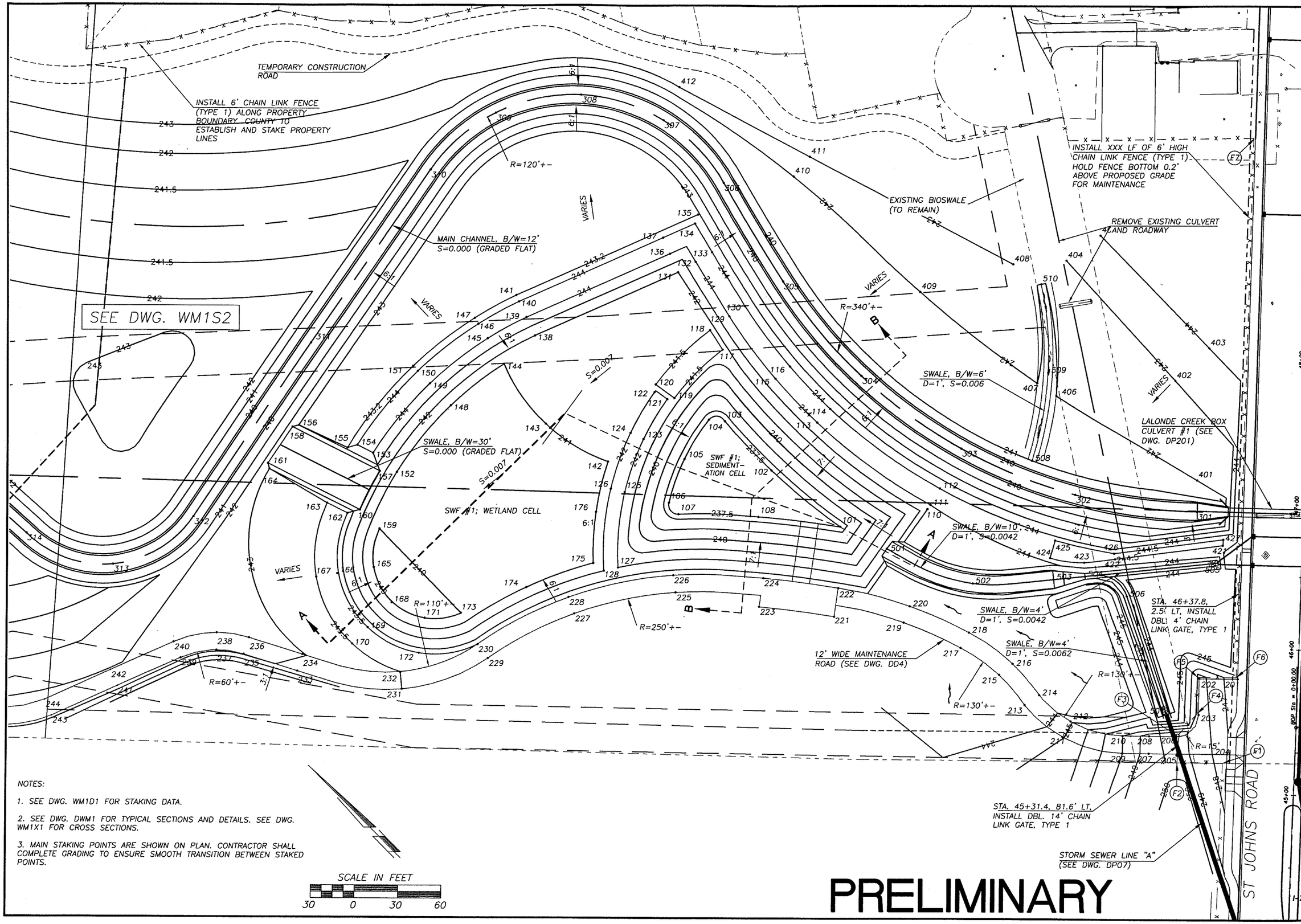

NOTES:

1. SEE DWG. WM1D1 FOR STAKING DATA.
2. SEE DWG. DWM1 FOR TYPICAL SECTIONS AND DETAILS. SEE DWG. WM1X1 FOR CROSS SECTIONS.
3. MAIN STAKING POINTS ARE SHOWN ON PLAN. CONTRACTOR SHALL COMPLETE GRADING TO ENSURE SMOOTH TRANSITION BETWEEN STAKED POINTS.

PRELIMINARY

DESIGNED	ME/JM
DRAWN	KB/RK
CRP	301422
HOR.	SEE SHEET
VERT.	SEE SHEET
DATE	07/31/05
DWG:	WM1S1
SHEET	13 OF 151

CALL 48 HOURS BEFORE YOU DIG 1-800-553-4344 "It's the Law" NORTHWEST UTILITIES NOTIFICATION CENTER

STEVE R. WOOD STATE OF WASHINGTON 31148 REGISTERED PROFESSIONAL ENGINEER EXPIRES: JULY 7, 2007

ENGINEERING PROGRAM DESIGN SECTION

ST JOHNS ROAD (NE 50TH AVE TO NE 72ND AVE) WETLAND MITIGATION #1; STAKING (SHT. 1 OF 2)

proud past, promising future

CLARK COUNTY WASHINGTON

n:\CIP\PROJECTS\301422-STJohns-50thTo72nd\DESIGN\DWGS\WM1GSP1.dwg, 7/27/2005 2:55:29 PM, kerlinr

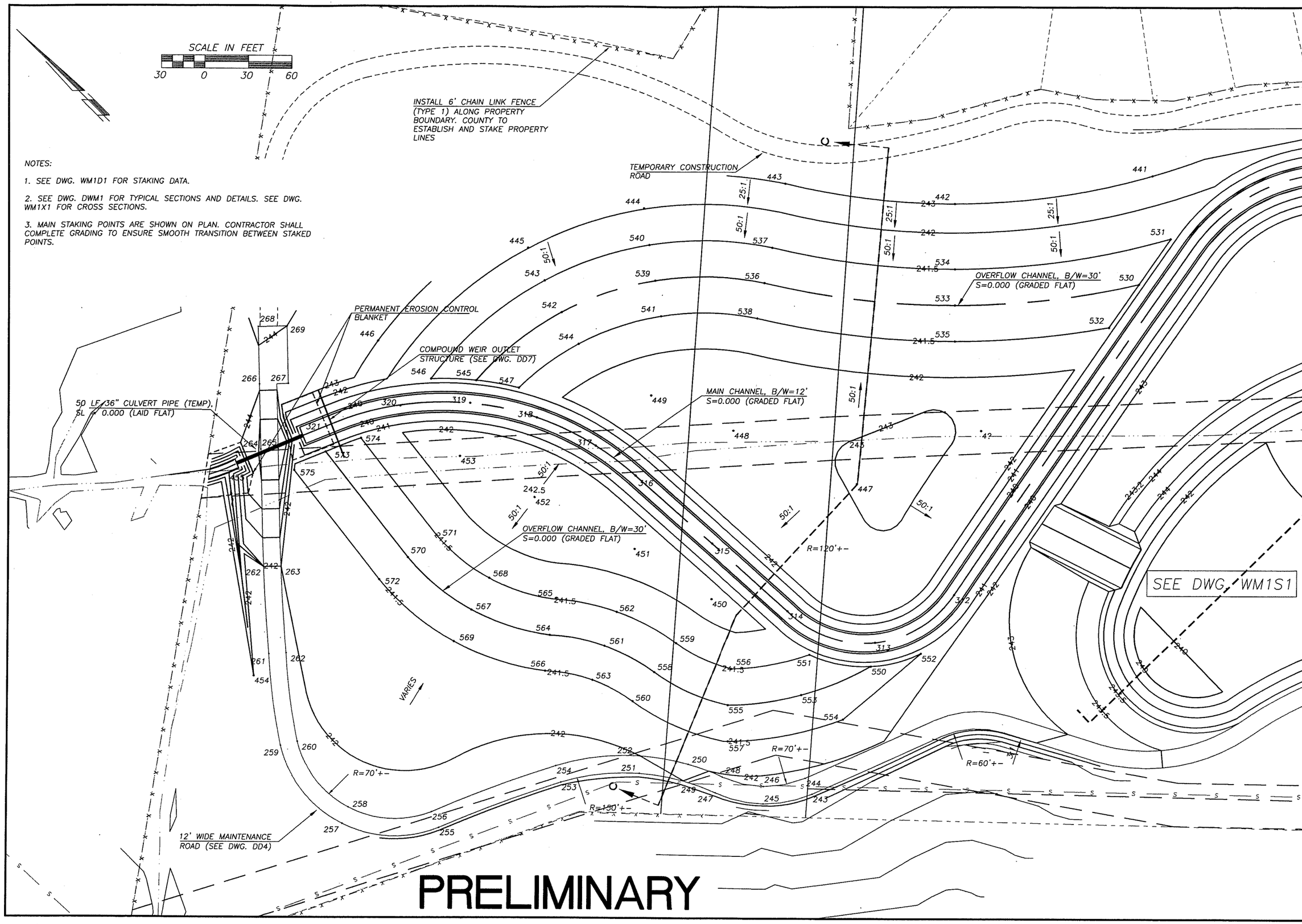

NOTES:

1. SEE DWG. WM1D1 FOR STAKING DATA.

2. SEE DWG. DWM1 FOR TYPICAL SECTIONS AND DETAILS. SEE DWG. WM1X1 FOR CROSS SECTIONS.

3. MAIN STAKING POINTS ARE SHOWN ON PLAN. CONTRACTOR SHALL COMPLETE GRADING TO ENSURE SMOOTH TRANSITION BETWEEN STAKED POINTS.

DESIGNED	ME/JM
DRAWN	KB/RK
CRP	301422
HOR.	SEE SHEET
VERT.	SEE SHEET
DATE	07/31/05
DWG:	WM1S2
SHEET	14 OF 151

CALL 48 HOURS BEFORE YOU DIG
1-800-553-4344
"It's the Law"
NORTHWEST UTILITIES NOTIFICATION CENTER

STATE OF WASHINGTON
MICHAEL E. JOHNSON
31148
REGISTERED PROFESSIONAL ENGINEER
EXPIRES JULY 7, 2007

ENGINEERING PROGRAM
DESIGN SECTION

ST JOHNS ROAD (NE 50TH AVE TO NE 72ND AVE)
WETLAND MITIGATION #1; STAKING (SHT. 2 OF 2)

proud past, promising future
CLARK COUNTY
WASHINGTON

n:\CIP\PROJECTS\301422-STJohns-50thTo72nd\DESIGN\DWGS\WM1GSP2.dwg, 7/27/2005 2:56:05 PM, kerlinr

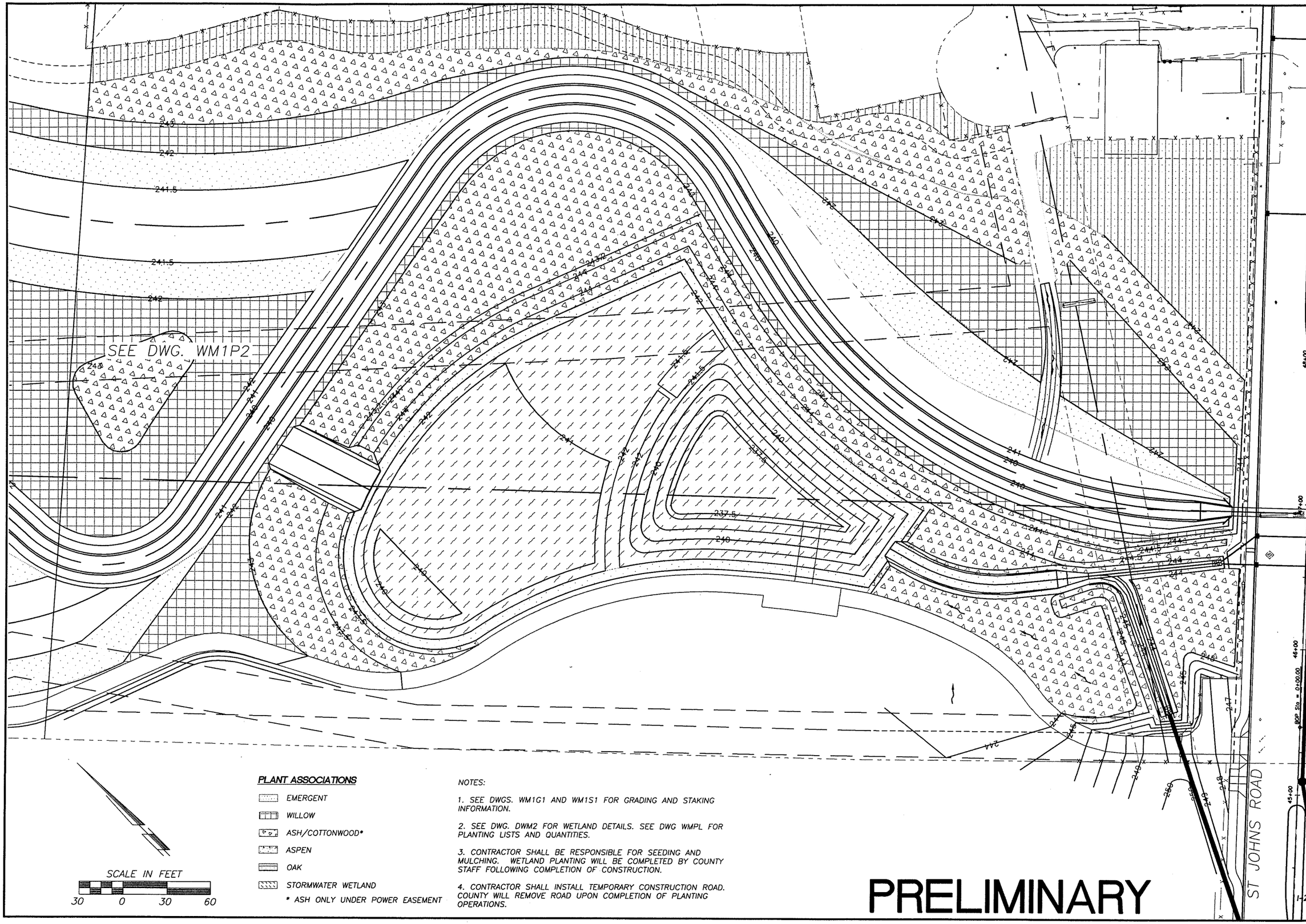

PLANT ASSOCIATIONS

- EMERGENT
- WILLOW
- ASH/COTTONWOOD*
- ASPEN
- OAK
- STORMWATER WETLAND

* ASH ONLY UNDER POWER EASEMENT

NOTES:

1. SEE DWGS. WM1G1 AND WM1S1 FOR GRADING AND STAKING INFORMATION.
2. SEE DWG. DWM2 FOR WETLAND DETAILS. SEE DWG WMPL FOR PLANTING LISTS AND QUANTITIES.
3. CONTRACTOR SHALL BE RESPONSIBLE FOR SEEDING AND MULCHING. WETLAND PLANTING WILL BE COMPLETED BY COUNTY STAFF FOLLOWING COMPLETION OF CONSTRUCTION.
4. CONTRACTOR SHALL INSTALL TEMPORARY CONSTRUCTION ROAD. COUNTY WILL REMOVE ROAD UPON COMPLETION OF PLANTING OPERATIONS.

PRELIMINARY

DESIGNED	ME/JM
DRAWN	KB/RK
CRP	301422
HOR.	SEE SHEET
VERT.	SEE SHEET
DATE	07/31/05
DWG:	WM1P1
SHEET	15 OF 151

CALL 48 HOURS BEFORE YOU DIG 1-800-553-4344 "It's the Law" NORTHWEST UTILITIES NOTIFICATION CENTER

STEVEN JOHN MILNE STATE OF WASHINGTON 37148 REGISTERED PROFESSIONAL ENGINEER EXPIRES: JULY 7, 2007

ENGINEERING PROGRAM DESIGN SECTION

ST JOHNS ROAD (NE 50TH AVE TO NE 72ND AVE)
WETLAND MITIGATION #1; PLANTING (SHT. 1 OF 2)

proud past, promising future

CLARK COUNTY WASHINGTON

n:\CIP\PROJECTS\301422-STJohns-50thTo72nd\DESIGN\DWGS\WM1GSP1.dwg, 7/27/2005 2:56:45 PM, kerlinr

PLANT ASSOCIATIONS

- EMERGENT
- WILLOW
- ASH/COTTONWOOD*
- ASPEN
- OAK
- STORMWATER WETLAND

* ASH ONLY UNDER POWER EASEMENT

NOTES:

1. SEE DWGS. WM1G1 AND WM1S1 FOR GRADING AND STAKING INFORMATION.
2. SEE DWG. DWM2 FOR WETLAND DETAILS. SEE DWG WMPL FOR PLANTING LISTS AND QUANTITIES.
3. CONTRACTOR SHALL BE RESPONSIBLE FOR SEEDING AND MULCHING. WETLAND PLANTING WILL BE COMPLETED BY COUNTY STAFF FOLLOWING COMPLETION OF CONSTRUCTION.
4. CONTRACTOR SHALL INSTALL TEMPORARY CONSTRUCTION ROAD. COUNTY WILL REMOVE ROAD UPON COMPLETION OF PLANTING OPERATIONS.

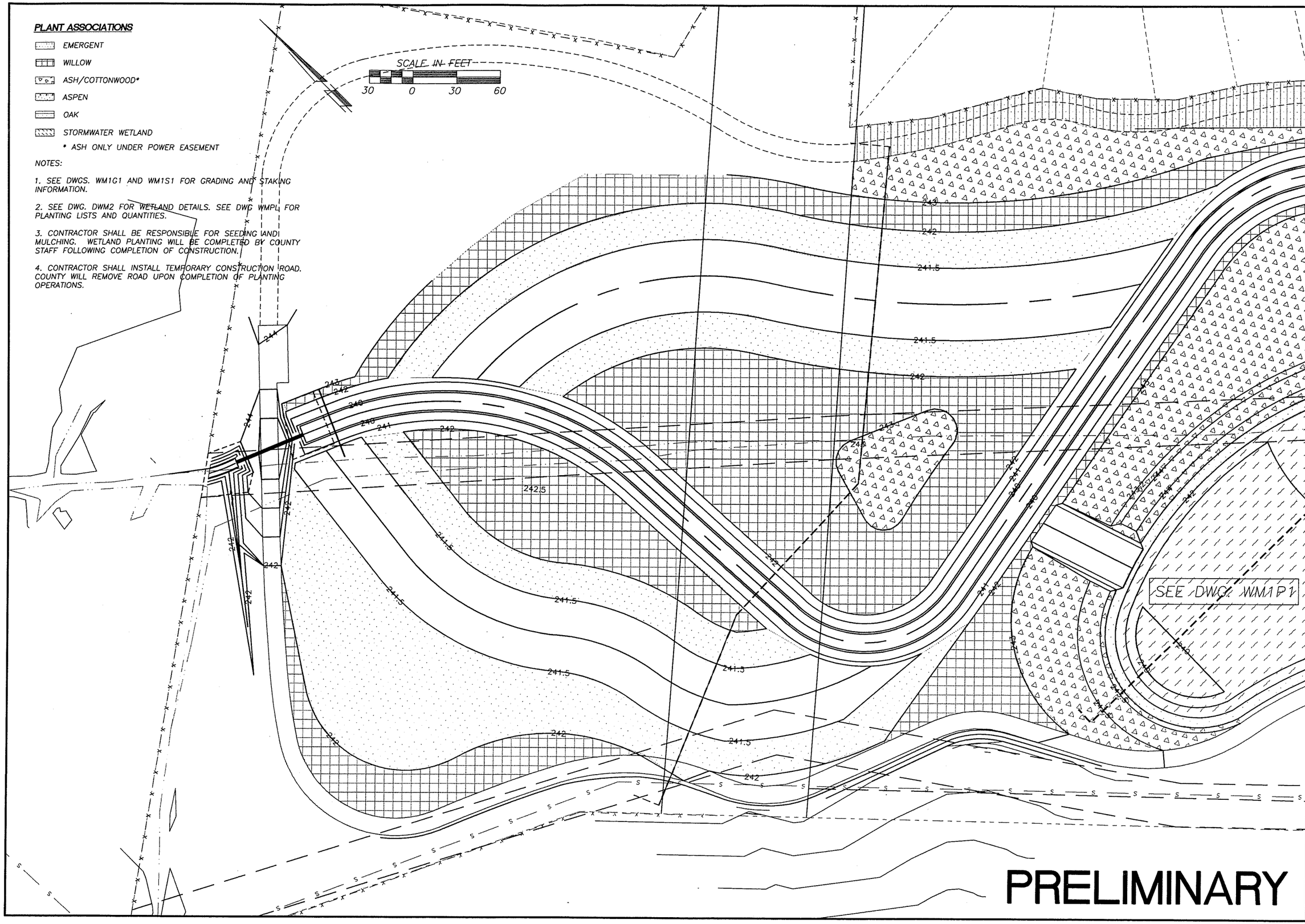

DESIGNED	ME/JM
DRAWN	KB/RK
CRP	301422
HOR.	SEE SHEET
VERT.	SEE SHEET
DATE	07/31/05
DWG:	WM1P2
SHEET	16 OF 151

CALL 48 HOURS BEFORE YOU DIG
1-800-553-4344
"It's the Law"
NORTHWEST UTILITIES NOTIFICATION CENTER

STATE OF WASHINGTON
MICHAEL J. MILNE
31144
PROFESSIONAL ENGINEER
EXPIRES JULY 7, 2007

ENGINEERING PROGRAM
DESIGN SECTION

ST JOHNS ROAD (NE 50TH AVE TO NE 72ND AVE)
WETLAND MITIGATION #1; PLANTING (SHT. 2 OF 2)

proud past, promising future
CLARK COUNTY
WASHINGTON

n:\CIP\PROJECTS\301422-STJohns-50thTo72nd\DESIGN\DWGS\WM1GSP2.dwg, 7/27/2005 2:57:18 PM, kerlinr

SCALE IN FEET

30 0 30 60

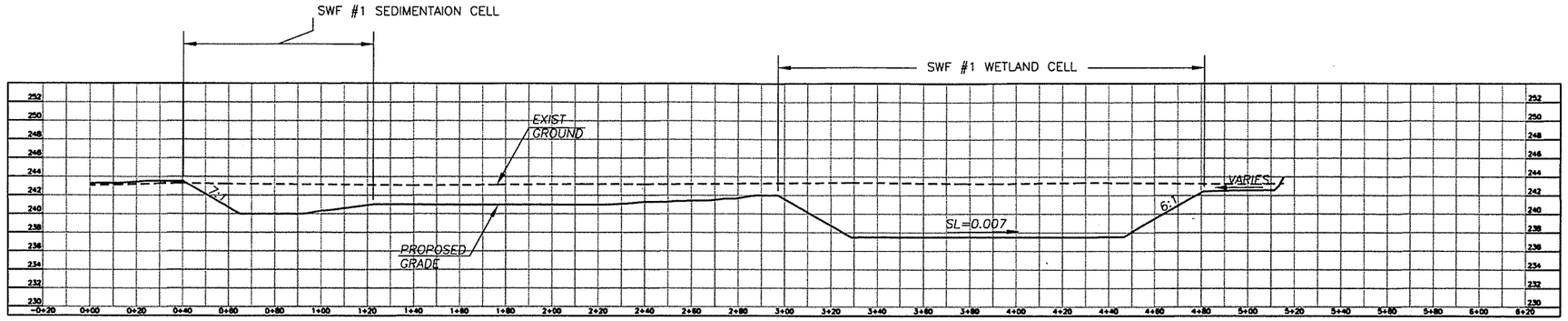

SECTION A-A

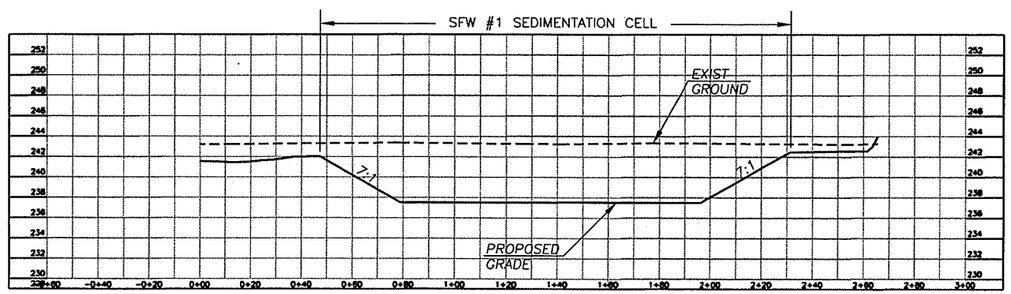

SECTION B-B

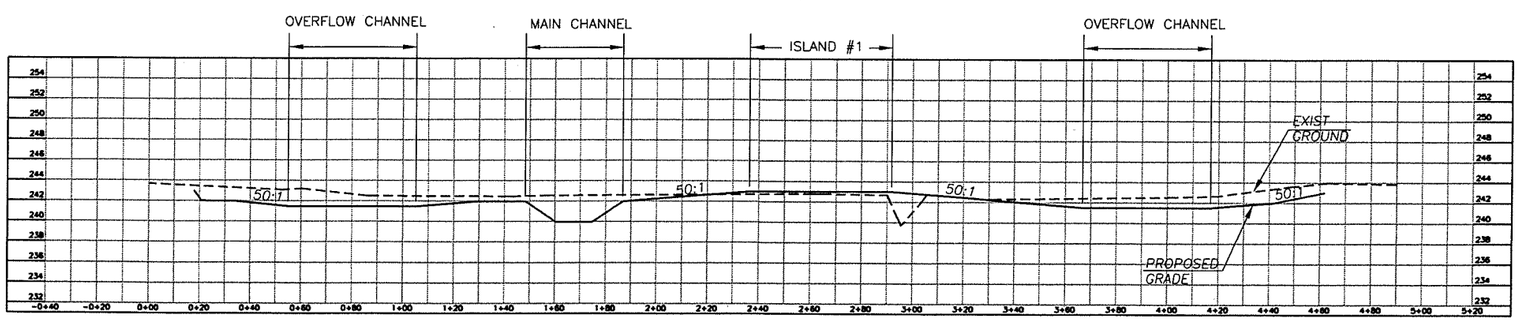

SECTION C-C

NOTES:
1. SEE SHEET DWM1 FOR TYPICAL CROSS SECTIONS AND DETAILS.

2. SEE SHEETS WM1 "G", "S", AND "P" DWGS FOR GRADING, STAKING, AND PLANTING PLANS.

3. SEE SHEET D1 FOR STAKING POINT DATA.

PRELIMINARY

DESIGNED	ME/JM
DRAWN	KB/RK
CRP	301422
HOR.	SEE SHEET
VERT.	SEE SHEET
DATE	07/31/05
DWG:	WM1X1
SHEET	17 OF 151

CALL 48 HOURS BEFORE YOU DIG 1-800-553-4344 "It's the Law" NORTHWEST UTILITIES NOTIFICATION CENTER

JOHN MILNE EXPIRES: JULY 7, 2007

ENGINEERING PROGRAM
DESIGN SECTION

ST JOHNS ROAD (NE 50TH AVE TO NE 72ND AVE)
WETLAND MITIGATION #1; CROSS SECTIONS

proud past, promising future

CLARK COUNTY WASHINGTON

n:\CIP\PROJECTS\301422-STJohns-50thTo72nd\DESIGN\DWGS\WM1X1.dwg, 7/27/2005 2:57:38 PM, keilinr

WETLAND MITIGATION AREA #1

SWF1 GRADING

POINT	NORTHING	EASTING	ELEV
101	139918.43	1100949.61	237.50
102	139979.35	1100943.40	237.50
103	140026.00	1100944.48	237.50
104	140034.69	1100937.33	237.50
105	140027.32	1100906.27	237.50
106	140013.48	1100877.50	237.50
107	140003.13	1100876.58	237.50
108	139962.90	1100914.51	237.50
110	139885.01	1101000.34	243.50
111	139885.64	1101003.80	244.00
112	139889.24	1101016.29	244.00
113	139980.75	1100988.88	244.00
114	139981.15	1101001.87	244.00
115	140022.48	1100989.85	244.00
116	140021.48	1101002.81	244.00
117	140062.44	1100978.15	242.00
118	140078.15	1100981.44	242.00
119	140062.08	1100930.92	242.00
120	140077.87	1100928.34	242.00
121	140065.00	1100926.89	242.00
122	140074.67	1100924.04	242.00
123	140057.01	1100895.74	242.00
124	140066.43	1100892.40	242.00
125	140040.23	1100860.87	242.00
126	140048.72	1100855.59	242.00
127	140006.35	1100820.84	242.00
128	140011.72	1100812.25	242.00
129	140075.55	1100997.70	244.00
130	140072.89	1101010.43	244.00
131	140122.07	1100994.19	242.00
132	140118.70	1101007.80	244.00
133	140115.58	1101020.42	244.00
134	140137.72	1101026.05	244.00
135	140140.67	1101031.79	243.20
136	140135.15	1100999.19	244.00
137	140146.36	1101003.47	244.00
138	140160.77	1100892.98	242.00
139	140173.92	1100897.81	244.00
140	140185.20	1100901.89	244.00
141	140189.69	1100903.61	243.20
142	140063.35	1100867.37	241.00
143	140112.22	1100855.27	241.00
144	140161.79	1100864.05	241.00
145	140182.29	1100868.63	244.00
146	140194.00	1100871.24	244.00
147	140198.68	1100872.29	243.20
148	140167.38	1100817.85	241.00
149	140188.37	1100818.28	244.00
150	140200.37	1100818.53	244.00
151	140205.17	1100818.63	243.20
152	140161.11	1100759.03	241.00
153	140182.09	1100756.53	244.00
154	140193.54	1100752.77	244.00
155	140196.98	1100746.59	243.20
156	140231.50	1100734.00	243.00
157	140169.95	1100751.05	242.50
158	140233.78	1100730.07	242.50
159	140141.78	1100722.91	240.00
160	140160.58	1100722.55	242.50
161	140227.88	1100700.43	242.50
162	140164.96	1100714.80	243.50
163	140179.73	1100709.94	243.50
164	140224.35	1100698.44	243.00
165	140125.50	1100701.25	240.00
166	140140.13	1100680.52	243.50
167	140148.56	1100668.56	243.50
168	140099.46	1100692.80	240.00
169	140098.76	1100668.93	240.00
170	140098.31	1100653.43	243.50
171	140075.61	1100701.52	240.00
172	140061.27	1100681.64	243.50
173	140060.51	1100721.79	240.00
174	140041.24	1100766.38	241.00
175	140020.65	1100810.84	241.00
176	140044.56	1100837.17	241.00

MAINTENANCE ROAD GRADING

POINT	NORTHING	EASTING	ELEV
201	139650.80	1101069.56	246.56
202	139669.80	1101050.80	248.31
203	139652.24	1101033.01	248.46
204	139619.03	1101027.85	247.37
205	139643.35	1101002.61	249.50
206	139652.37	1101011.80	249.50
207	139657.61	1100989.76	249.50
208	139665.97	1100998.37	249.50
209	139670.57	1100976.96	248.00
210	139678.92	1100985.58	248.00
211	139707.47	1100955.79	244.90
212	139711.07	1100967.24	244.90
213	139741.35	1100952.80	243.82
214	139739.17	1100964.59	243.70
215	139768.55	1100954.83	243.72
216	139767.40	1100966.87	243.60
217	139800.56	1100949.03	243.62
218	139804.04	1100960.60	243.50
219	139840.55	1100933.70	243.62
220	139845.69	1100944.54	243.50
221	139877.05	1100902.85	243.70
222	139889.13	1100918.80	243.50
223	139918.22	1100871.08	243.70
224	139930.31	1100887.04	243.50
225	139965.98	1100837.09	243.62
226	139975.59	1100844.32	243.50
227	140005.00	1100776.91	243.62
228	140015.87	1100782.04	243.50
229	140024.96	1100713.01	243.62
230	140036.88	1100714.73	243.50
231	140051.94	1100655.77	243.50
232	140060.89	1100663.21	243.50
233	140111.46	1100613.59	243.10
234	140117.05	1100624.21	242.98
235	140145.68	1100595.57	242.85
236	140151.27	1100606.19	242.73
237	140160.99	1100584.15	242.66
238	140169.33	1100592.78	242.54
239	140174.46	1100563.04	242.47
240	140185.68	1100567.29	242.35
241	140191.30	1100518.63	242.16
242	140202.49	1100522.98	242.04
243	140209.06	1100471.80	242.38
244	140220.25	1100476.15	242.26
245	140228.10	1100443.22	242.50
246	140236.53	1100451.76	242.38
247	140257.09	1100424.81	242.20
248	140261.28	1100436.05	242.08
249	140278.36	1100415.16	242.00
250	140284.20	1100425.38	241.88
251	140303.28	1100397.19	242.12
252	140311.47	1100405.97	242.00
253	140336.93	1100354.36	242.32
254	140347.57	1100359.92	242.20
255	140374.18	1100272.74	242.32
256	140385.48	1100276.79	242.20
257	140423.22	1100227.34	242.32
258	140428.29	1100238.30	242.20
259	140491.69	1100234.80	242.32
260	140485.45	1100245.05	242.20
261	140542.46	1100273.49	242.22
262	140534.44	1100282.42	242.10
263	140579.65	1100322.06	242.00
264	140647.17	1100369.31	245.80
265	140638.89	1100378.00	245.80
266	140679.78	1100400.34	243.90
267	140665.93	1100414.78	243.70
268	140708.69	1100427.87	244.20
269	140694.90	1100442.35	244.00
270	140587.92	1100313.37	242.00

MAIN CHANNEL GRADING

POINT	NORTHING	EASTING	ELEV
301	139752.98	1101130.84	239.80
302	139820.38	1101079.41	239.80
303	139898.35	1101046.14	239.80
304	139982.11	1101033.05	239.80
305	140066.51	1101040.97	239.80
306	140143.50	1101059.86	239.80
307	140203.29	1101060.57	239.80
308	140255.94	1101032.38	239.80
309	140288.55	1100982.14	239.80
310	140292.85	1100922.67	239.80
311	140266.20	1100780.15	239.80
312	140237.83	1100637.96	239.80
313	140253.13	1100575.72	239.80
314	140311.06	1100548.31	239.80
315	140381.42	1100544.16	239.80
316	140451.77	1100540.01	239.80
317	140485.84	1100534.93	239.80
318	140528.47	1100519.71	239.80
319	140567.93	1100494.34	239.80
320	140600.46	1100459.04	239.80
321	140633.34	1100396.56	239.80

GENERAL GRADING

POINT	NORTHING	EASTING	ELEV
401	139768.47	1101145.91	244.50
402	139827.77	1101183.41	244.50
403	139827.15	1101215.97	244.50
404	139939.55	1101188.88	244.50
405	139935.38	1101217.58	244.50
406	139878.02	1101118.17	244.50
407	139893.60	1101115.05	244.50
408	139963.56	1101161.18	244.50
409	139995.24	1101102.34	244.50
410	140112.81	1101097.03	244.50
411	140114.50	1101114.46	244.50
412	140211.64	1101084.45	244.50
413	139723.79	1101126.90	244.50
414	139769.54	1101067.40	244.50
415	139782.68	1101050.84	244.50
416	139801.42	1101036.51	244.50
417	139807.61	1101047.46	244.50
418	139772.79	1101069.74	244.50
419	139726.46	1101130.00	244.50
441	140347.68	1100937.90	243.00
442	140429.61	1100828.55	243.00
443	140522.25	1100755.39	243.00
444	140579.07	1100674.25	242.00
445	140616.31	1100598.22	242.00
446	140643.26	1100479.82	243.00
447	140340.21	1100644.14	243.60
448	140426.47	1100609.54	242.80
449	140483.64	1100586.53	242.40
450	140305.54	1100730.84	242.80
451	140416.11	1100503.85	242.40
452	140490.37	1100479.90	242.60
453	140546.86	1100463.44	242.40
454	140539.10	1100255.53	242.00
455	140651.06	1100342.19	240.00
456	140354.24	1100516.72	242.20

SWALE GRADING

POINT	NORTHING	EASTING	ELEV
501	139885.03	1100961.51	242.50
502	139826.53	1100986.30	242.77
503	139789.11	1101027.74	242.97
504	139775.49	1101044.57	243.07
505	139717.68	1101116.05	243.44
506	139745.50	1101055.17	243.21
507	139668.08	1101017.36	243.83
508	139857.93	1101074.93	241.00
509	139893.35	1101125.51	241.35
510	139940.20	1101165.20	241.70
530	140301.29	1100878.66	241.50
531	140308.27	1100916.18	241.50
532	140294.68	1100843.10	241.50
533	140379.96	1100779.21	241.50
534	140397.70	1100796.83	241.50
535	140362.23	1100761.58	241.50
536	140483.86	1100696.86	241.50
537	140497.29	1100717.95	241.50
538	140469.96	1100676.05	241.50
539	140538.18	1100644.53	241.50
540	140558.52	1100659.07	241.50
541	140517.85	1100629.98	241.50
542	140568.18	1100583.29	241.50
543	140592.13	1100590.44	241.50
544	140544.22	1100576.14	241.50
545	140576.21	1100508.24	241.50
546	140598.83	1100487.02	241.50
547	140551.81	1100525.39	241.50
550	140243.51	1100562.06	241.50
551	140278.99	1100537.91	241.50
552	140225.15	1100593.05	241.50
553	140263.08	1100514.43	241.50
554	140230.90	1100522.83	241.50
555	140294.06	1100473.30	241.50
556	140309.99	1100492.79	241.50
557	140276.17	1100455.83	241.50
558	140345.78	1100453.46	241.50
559	140349.64	1100478.16	241.50
560	140341.92	1100428.76	241.50
561	140382.75	1100441.95	241.50
562	140393.59	1100464.48	241.50
563	140371.92	1100419.42	241.50
564	140414.82	1100420.25	241.50
565	140430.08	1100441.12	241.50
566	140399.43	1100400.56	241.50
567	140465.48	1100394.27	241.50
568	140472.50	1100418.26	241.50
569	140458.47	1100370.27	241.50
570	140522.17	1100388.87	241.50
571	140519.50	1100413.73	241.50
572	140525.15	1100364.05	241.50
573	140614.32	1100399.96	241.50
574	140603.72	1100423.87	241.50
575	140620.62	1100375.54	241.50

PRELIMINARY

DESIGNED ME/JM
DRAWN KB/RK
CRP 301422
HOR. SEE SHEET
VERT. SEE SHEET
DATE 07/31/05
DWG: WM1D1
SHEET 18 OF 151

CALL 48 HOURS BEFORE YOU DIG 1-800-553-4344 "It's the Law" NORTHWEST UTILITIES NOTIFICATION CENTER

STATE OF WASHINGTON 31148 REGISTERED PROFESSIONAL ENGINEER
EXPIRES: JULY 7, 2007

ENGINEERING PROGRAM
DESIGN SECTION

ST JOHNS ROAD (NE 50TH AVE TO NE 72ND AVE)
WETLAND MITIGATION #1: STAKING DATA

proud past, promising future
CLARK COUNTY WASHINGTON

n:\CIP\PROJECTS\301422-STJohns-50thTo72nd\DESIGN\DWGS\WM1D1.dwg, 7/27/2005 2:57:52 PM, kerlinr

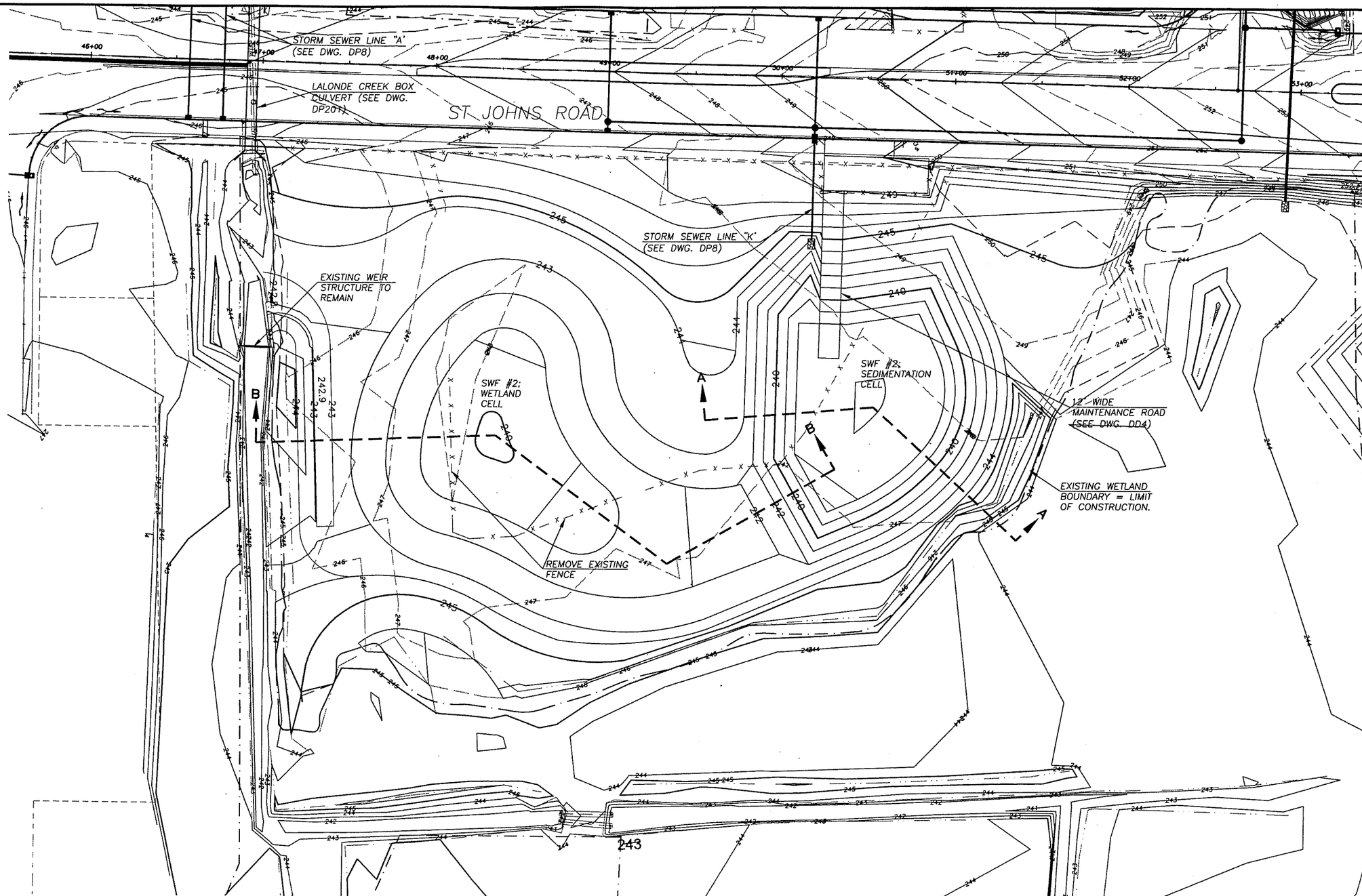

NOTES:

1. MAIN STAKING POINTS ARE SHOWN ON PLAN. SEE DWG. WM2S1 FOR STAKING INFORMATION.

2. SEE DWG. DWM1 FOR STANDARD SWALE AND CHANNEL CROSS SECTIONS AND DETAILS.

3. CONTRACTOR SHALL COMPLETE GRADING TO ENSURE SMOOTH TRANSITION BETWEEN STAKED POINTS.

4. CONTRACTOR SHALL BE RESPONSIBLE FOR SEEDING AND MULCHING. ADDITIONAL WETLAND PLANTING AND LANDSCAPING WILL BE PERFORMED BY COUNTY FOLLOWING COMPLETION OF CONSTRUCTION.

5. SEEDING AND MULCHING TO BE COMPLETED FOR AREAS ABOVE ELEVATION 243.0 IN SEDIMENTATION CELL AND WETLAND CELL AREAS

PRELIMINARY

SCALE IN FEET

30 0 30 60

DESIGNED	ME/JM
DRAWN	KB/RK
CRP	301422
HOR.	SEE SHEET
VERT.	SEE SHEET
DATE	07/31/05
DWG:	WM2G1
SHEET	20 OF 151

CALL 48 HOURS BEFORE YOU DIG 1-800-553-4344 "It's the Law" NORTHWEST UTILITIES NOTIFICATION CENTER

STATE OF WASHINGTON MILLIE WEINSTEIN 31148 REGISTERED PROFESSIONAL ENGINEER EXPIRES: JULY 7, 2007

ENGINEERING PROGRAM
DESIGN SECTION

ST JOHNS ROAD (NE 50TH AVE TO NE 72ND AVE)
WETLAND MITIGATION #2: GRADING

proud past. promising future

CLARK COUNTY WASHINGTON

n:\CIP\PROJECTS\301422-STJohns-50thTo72nd\DESIGN\DWGS\WM2GSP.dwg, 7/27/2005 2:58:20 PM, kerlinr

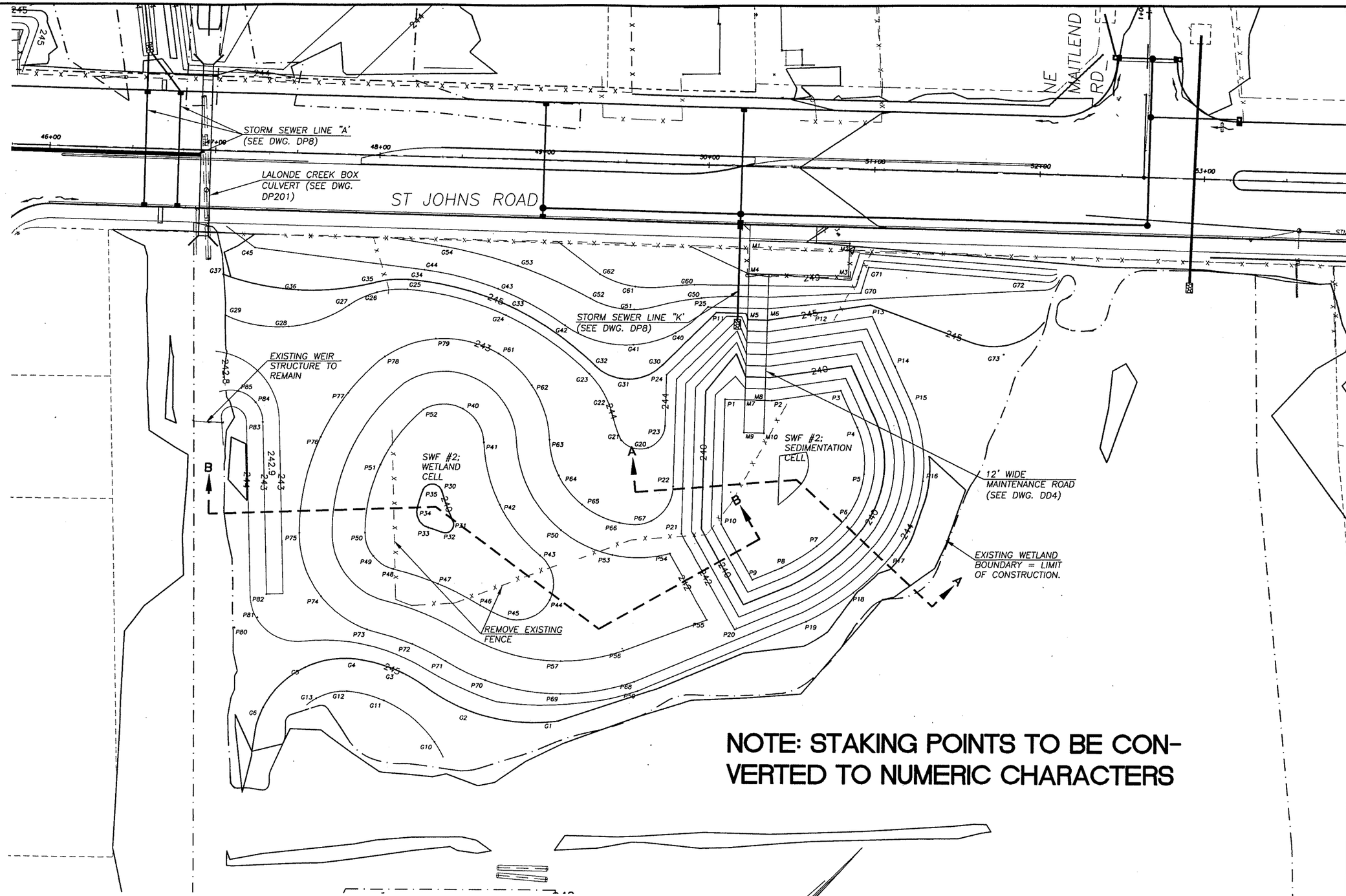

NOTE: STAKING POINTS TO BE CONVERTED TO NUMERIC CHARACTERS

PRELIMINARY

SCALE IN FEET

30 0 30 60

NOTES:

1. SEE DWG. WM2D1 FOR STAKING DATA.
2. SEE DWG. DWM1 FOR TYPICAL SECTIONS AND DETAILS. SEE DWG. WM2X1 FOR CROSS SECTIONS.
3. MAIN STAKING POINTS ARE SHOWN ON PLAN. CONTRACTOR SHALL COMPLETE GRADING TO ENSURE SMOOTH TRANSITION BETWEEN STAKED POINTS.

DESIGNED	ME/JM
DRAWN	KB/RK
CRP	301422
HOR.	SEE SHEET
VERT.	SEE SHEET
DATE	07/31/05
DWG:	WM2S1
SHEET	21 OF 151

CALL 48 HOURS BEFORE YOU DIG
1-800-553-4344
"It's the Law"
NORTHWEST UTILITIES NOTIFICATION CENTER

STATE OF WASHINGTON
MICHAEL E. SHORT
31148
REGISTERED PROFESSIONAL ENGINEER
EXPIRES: JULY 7, 2007

ENGINEERING PROGRAM
DESIGN SECTION

ST JOHNS ROAD (NE 50TH AVE TO NE 72ND AVE)
WETLAND MITIGATION #2; STAKING

proud past, promising future
CLARK COUNTY
WASHINGTON

n:\CIPPROJECTS\301422-STJohns-50thTo72nd\DESIGN\DWGS\WM2GSP.dwg, 7/27/2005 2:58:40 PM, kerlinr

PLANT ASSOCIATIONS

- EMERGENT
- WILLOW
- ASH/COTTONWOOD
- ASPEN
- OAK
- STORMWATER WETLAND

NOTES:

1. SEE DWGS. WM2G AND WM2S FOR GRADING AND STAKING INFORMATION.
2. SEE DWG. DWM2 FOR WETLAND DETAILS. SEE DWG WMPL FOR PLANTING LISTS AND QUANTITIES.
3. CONTRACTOR SHALL BE RESPONSIBLE FOR SEEDING AND MULCHING. WETLAND PLANTING WILL BE COMPLETED BY COUNTY STAFF FOLLOWING COMPLETION OF CONSTRUCTION.

PRELIMINARY

SCALE IN FEET

30 0 30 60

DESIGNED	ME/JM
DRAWN	KB/RK
CRP	301422
HOR.	SEE SHEET
VERT.	SEE SHEET
DATE	07/31/05
DWG:	WM2P1
SHEET	22 OF 151

CALL 48 HOURS BEFORE YOU DIG 1-800-553-4344 "It's the Law" NORTHWEST UTILITIES NOTIFICATION CENTER

STATE OF WASHINGTON MICHAEL E. MORTON 11148 REGISTERED PROFESSIONAL ENGINEER EXPIRES: JULY 7, 2007

ENGINEERING PROGRAM
DESIGN SECTION

ST JOHNS ROAD (NE 50TH AVE TO NE 72ND AVE)
WETLAND MITIGATION #2; PLANTING

proud past, promising future

CLARK COUNTY
WASHINGTON

n:\CIP\PROJECTS\301422-STJohns-50thTo72nd\DESIGN\DWGS\WM2GSP.dwg, 7/27/2005 2:58:59 PM, kerlinr

WMA2

POND GRADING

POINT	NORTHING	EASTING	ELEV
2P1	139816.89	1101511.65	238
2P2	139836.29	1101532.12	238
2P3	139869.87	1101557.01	238
2P4	139861.20	1101580.08	238
2P5	139844.09	1101603.21	238
2P6	139817.58	1101614.37	238
2P7	139792.97	1101614.05	238
2P8	139768.97	1101608.59	238
2P9	139751.26	1101601.36	238
2P10	139761.74	1101563.90	238
2P11	139850.36	1101470.34	245
2P12	139899.05	1101517.65	245
2P13	139919.49	1101532.80	245
2P14	139903.56	1101569.68	245
2P15	139894.77	1101593.07	245
2P16	139866.34	1101631.51	245
2P17	139821.54	1101650.16	245
2P18	139788.72	1101649.80	245
2P19	139756.28	1101642.29	245
2P20	139722.38	1101615.48	242
2P21	139740.42	1101551.05	242
2P22	139757.04	1101527.03	243
2P23	139779.59	1101497.40	244
2P24	139802.25	1101475.93	244
2P25	139849.20	1101464.33	246
2P30	139655.35	1101430.34	240
2P31	139647.42	1101447.60	240
2P32	139637.68	1101447.55	240
2P33	139633.93	1101439.98	240
2P34	139637.41	1101427.01	240
2P35	139648.21	1101421.44	240
2P40	139699.85	1101403.58	241
2P41	139694.46	1101427.04	241
2P42	139674.53	1101460.95	241
2P43	139670.24	1101500.04	241
2P44	139655.38	1101523.61	241
2P45	139629.28	1101513.85	241
2P46	139623.08	1101496.05	241
2P47	139614.22	1101468.69	241
2P48	139601.24	1101443.03	241
2P49	139598.09	1101428.58	241
2P50	139604.50	1101415.26	241
2P51	139640.29	1101392.34	241
2P52	139682.45	1101386.96	241
2P53	139701.69	1101530.77	242
2P54	139726.96	1101554.62	242
2P55	139714.46	1101599.27	242
2P56	139665.38	1101577.11	242
2P57	139633.90	1101554.82	242
2P58	139654.32	1101600.64	244
2P59	139690.13	1101498.01	242
2P61	139738.96	1101394.99	243
2P62	139739.66	1101423.01	243
2P63	139723.93	1101454.09	243
2P64	139712.49	1101473.55	243
2P65	139710.03	1101495.98	243
2P66	139718.46	1101519.87	243
2P67	139733.11	1101532.64	243
2P68	139656.75	1101595.15	243
2P69	139619.75	1101568.96	243
2P70	139593.02	1101530.73	243
2P70	139920.36	1101523.35	247
2P71	139584.18	1101505.36	243
2P71	139934.90	1101515.84	247
2P72	139577.24	1101483.92	243
2P72	139997.77	1101589.93	247
2P73	139563.95	1101458.04	243
2P73	139955.25	1101611.14	245
2P74	139558.36	1101423.92	243
2P75	139576.13	1101387.06	243
2P76	139626.64	1101354.75	243
2P77	139657.27	1101347.48	243
2P78	139688.76	1101347.40	243
2P79	139718.18	1101361.53	243
2P80	139507.47	1101400.26	243
2P81	139521.76	1101405.75	243
2P82	139535.75	1101399.53	243
2P83	139607.95	1101323.53	243
2P84	139613.34	1101311.86	243
2P85	139610.51	1101299.32	243

GENERAL

POINT	NORTHING	EASTING	ELEV
2G1	139607.33	1101579.91	245
2G2	139574.22	1101539.77	245
2G3	139559.95	1101490.41	245
2G4	139548.56	1101469.01	245
2G5	139521.22	1101447.98	245
2G6	139485.54	1101447.42	245
2G7	139544.79	1101535.75	246
2G8	139540.69	1101496.04	246
2G9	139528.72	1101476.18	246
2G10	139512.50	1101466.17	246
2G20	139762.90	1101499.64	244
2G21	139754.58	1101484.99	244
2G22	139764.74	1101464.32	244
2G23	139769.31	1101442.54	244
2G24	139758.63	1101381.56	244
2G25	139727.38	1101328.12	244
2G26	139713.03	1101316.22	244
2G27	139695.52	1101309.82	244
2G28	139660.24	1101293.26	244
2G29	139637.85	1101261.36	244
2G30	139804.61	1101469.95	245
2G31	139784.11	1101461.89	245
2G32	139775.31	1101441.68	245
2G33	139731.94	1101324.22	245
2G35	139716.32	1101311.19	245
2G36	139680.11	1101281.52	245
2G37	139654.29	1101242.47	245
2G40	139823.98	1101461.54	246
2G41	139800.89	1101448.83	246
2G42	139779.70	1101411.07	246
2G43	139766.58	1101366.71	246
2G44	139743.02	1101326.90	246
2G45	139679.49	1101244.67	246
2G50	139850.17	1101457.53	247
2G51	139816.27	1101433.81	247
2G52	139802.18	1101410.44	247
2G53	139785.06	1101365.42	247
2G54	139760.54	1101323.96	247
2G60	139852.97	1101448.94	248
2G61	139826.65	1101424.43	248
2G62	139816.66	1101404.02	248

MAINTENANCE ROAD GRADING

POINT	NORTHING	EASTING	ELEV
2M1	139895.56	1101453.65	249.3
2M2	139936.83	1101497.20	250.3
2M3	139922.31	1101510.96	249.3
2M4	139881.04	1101467.40	249
2M5	139861.08	1101487.04	245
2M6	139869.51	1101495.94	245
2M7	139825.15	1101520.36	238
2M8	139833.40	1101529.07	238
2M9	139810.63	1101534.12	238
2M10	139818.87	1101542.84	238

NOTE: STAKING POINTS TO BE CONVERTED TO NUMERIC CHARACTERS

PRELIMINARY

DESIGNED ME/JM
DRAWN KB/RK
CRP 301422
HOR. SEE SHEET
VERT. SEE SHEET
DATE 07/31/05
DWG: WM2D1
SHEET 24 OF 151

CALL 48 HOURS BEFORE YOU DIG
1-800-553-4344
"It's the Law"
NORTHWEST UTILITIES NOTIFICATION CENTER

STATE OF WASHINGTON
MILLIE JOHNSON
PROFESSIONAL ENGINEER
EXPIRES JULY 7, 2007

ENGINEERING PROGRAM
DESIGN SECTION

ST JOHNS ROAD (NE 50TH AVE TO NE 72ND AVE)
WETLAND MITIGATION AREA #2; STAKING DATA

proud past, promising future
CLARK COUNTY
WASHINGTON

n:\CIP\PROJECTS\301422-STJohns-50thTo72nd\DESIGN\DWGS\WM2D1.dwg, 7/27/2005 2:59:15 PM, kerlinr

WETLAND MITIGATION AREAS; PLANTING LISTS

PRELIMINARY

Plant Type	Species	Common Name	Size	Association *	SWF1 Northmoor	SWF2 Wilding	SWF3&4 Schuller Stevens	Total
Tree	*Fraxinus latifolia*	Oregon ash	3 gal	Ash/Cot				
	Populus balsamifera	black cottonwood	3 gal	Ash/Cot				
	Populus tremuloides	quaking aspen	3 gal	Aspen				
	Quercus garryana	Oregon white oak	5 gal	Oak				
	TOTAL Trees							
Understory and Shrub	*Amelanchier alnifolia*	serviceberry	3 gal	Oak, Asp				
	Cornus sericea	red osier dogwood	1 gal	Ash/Cot				
	Corylus cornuta	hazel	3 gal	Oak, Asp				
	Lonicera involucrata	twinberry	3 gal	Ash/Cot				
	Malus fusca	Pacific crabapple	3 gal	Ash/Cot				
	Mahonia aquifolium	tall Oregongrape	3 gal	Oak, Asp				
	Oemleria cerasiformis	osoberry	3 gal	Oak, Asp				
	Physocarpus capitatus	ninebark	3 gal	Ash/Cot				
	Rhamnus purshiana	cascara	3 gal	Ash/Cot				
	Rosa nutkana	Nootka rose	1 gal	Ash/Cot				
	Salix lucida lasiocarpa	Pacific willow	1 gal	Willow				
	Salix piperii	Piper's willow	1 gal	Willow				
	Salix sitchensis	Sitka willow	1 gal	Willow				
	Sambucus racemosa	Red elderberry	1 gal	Ash/Cot				
	Symphorocarpos alba	snowberry	1 gal	Oak, Asp				
	TOTAL Understory and Shrub							
Herbaceous species	*Alisma plantago-aquatica*	water plantain	seed	Emergent				
	Carex vesicaria	inflated sedge	seed	Emergent				
	Glyceria occidentalis	Western manna	seed	Emergent				
	Leersia oryzoides	rice cutgrass	seed	Emergent				
	Myosotis laxa	small-flowered	seed	Emergent				
	Polystichum munitum	sword fern	4"	Oak, Asp				
	Sagitaria latifolia	wapato	seed	Emergent				
	Scirpus tabernaemonti	hardstem bulrush	seed	Emergent				
	Total Herbaceous Species							
	GRAND TOTAL							

* Ash/Cot = Oregon ash / black cottonwood association; Aspen = quaking aspen association; Oak = Oregon white oak ass
Willow = willow association; Emergent = Emergent wetland (herbaceous) association

DESIGNED ME/JM
DRAWN KB/RK
CRP 301422
HOR. SEE SHEET
VERT. SEE SHEET
DATE 07/31/05
DWG: WMPL
SHEET 26 OF 151

CALL 48 HOURS BEFORE YOU DIG 1-800-553-4344 "It's the Law" NORTHWEST UTILITIES NOTIFICATION CENTER

STATE OF WASHINGTON MICHAEL J. MORTENSEN 21148 REGISTERED PROFESSIONAL ENGINEER EXPIRES JULY 7, 2007

ENGINEERING PROGRAM
DESIGN SECTION

ST JOHNS ROAD (NE 50TH AVE TO NE 72ND AVE)
WETLAND MITIGATION AREAS; PLANTING LISTS

proud past, promising future
CLARK COUNTY WASHINGTON

n:\CIP\PROJECTS\301422-STJohns-50thTo72nd\DESIGN\DWGS\WMPL.dwg, 7/27/2005 2:59:30 PM, kerlinr

NEW CONSTRUCTION
FOR USE WITH SIDEWALKS LOCATED ANYWHERE IN THE RIGHT-OF-WAY

NOTES:

1. RAMPS TO BE POURED SEPARATELY FROM SIDEWALK.
2. CROSSWALKS TO BE CENTERED ON SIGNAL POLE TO POLE CENTERLINES. CURB RAMP TO BE CENTERED WITHIN CROSSWALK.
3. SIDEWALK SLOPE TO BE 2% MAXIMUM RADIALLY AROUND CORNER SECTION. SINGLE RAMPS CAN BE INSTALLED.
4. RAMP SLOPES SHALL NOT BE STEEPER THAN 12H:1V.

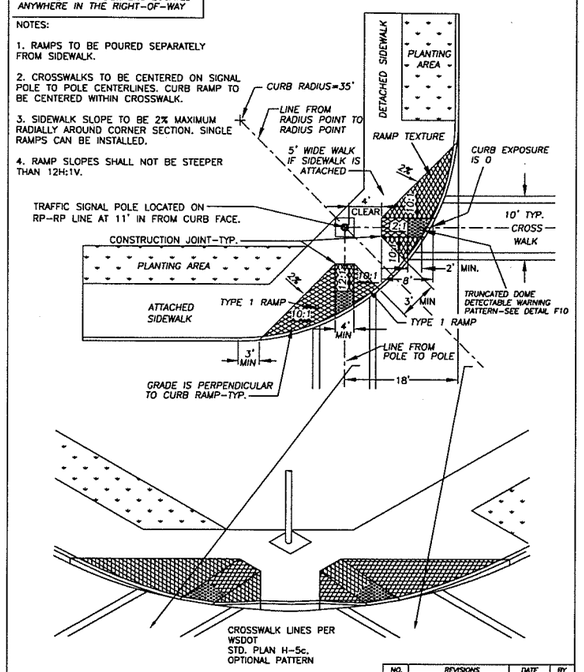

NO.	REVISIONS	DATE	BY
1	TRUNCATED DOMES	8/14/03	SCH

DWG: F2.dwg

Department of Public Works
CLARK COUNTY
WASHINGTON
proud past, promising future

TYPE 2 RAMP — F2
APPROVED — Peter Capen, COUNTY ENGINEER — 8/22/00 DATE
DESIGNED DB / DRAWN KB / DATE 7/24/00

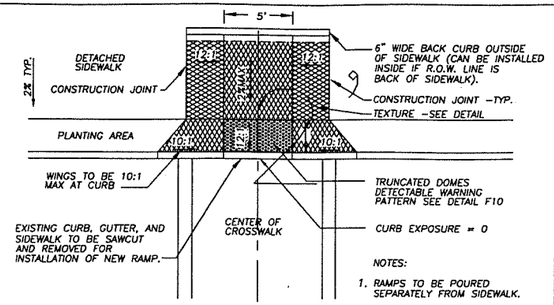

NOTES:

1. RAMPS TO BE POURED SEPARATELY FROM SIDEWALK.
2. CENTER RAMP ON CENTERLINE OF CROSSWALK.
3. BACK CURB IS TYPE E-1 PER STD. PLAN F18.
4. RAMP SLOPES SHALL NOT BE STEEPER THAN 12H:1V.

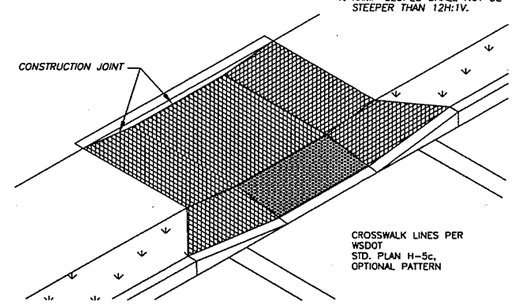

NO.	REVISIONS	DATE	BY
1	TRUNCATED DOME PATTERN	8/14/03	SCH

DWG: F4.dwg

Department of Public Works
CLARK COUNTY
WASHINGTON
proud past, promising future

TYPE 4 RAMP — F4
APPROVED — Peter Capen, COUNTY ENGINEER — 8/22/00 DATE
DESIGNED DB / DRAWN KB / DATE 7/24/00

JOINT SPACING:
SURFACE JOINTS - 5'
CONTROL JOINTS - 15'
EXPANSION JOINTS AT, STRUCTURES, OBSTRUCTIONS, OR AS DIRECTED BY THE INSPECTOR.

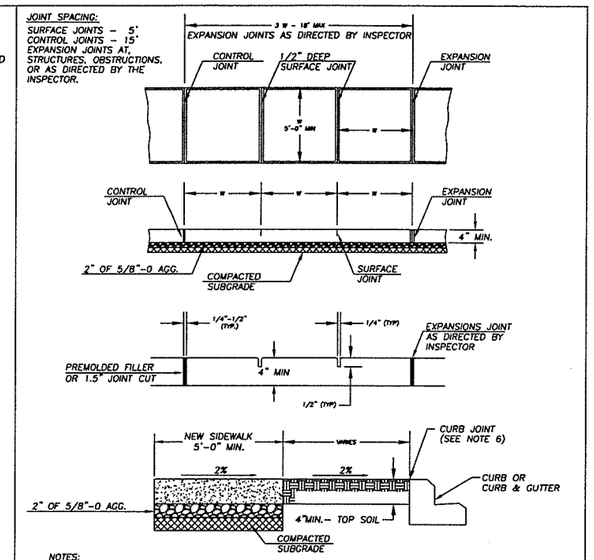

NOTES:

1. CONCRETE SHALL BE 3,000 PSI MIN. (CLASS 3000), 3 1/2" SLUMP (± 1")
2 FINISH SHALL BE MEDIUM BROOM PERPENDICULAR TO PEDESTRIAN TRAFFIC UNLESS OTHERWISE DIRECTED.
3. ALL EXISTING EDGES SHALL BE SAWCUT.
4. NO FILLER REQUIRED FOR SURFACE JOINTS.
5. ALL JOINTS AND EDGES SHALL BE FINISHED WITH 1/4" RADIUS EDGER (3" SMOOTH EACH SIDE)
6. FOR SIDEWALKS ADJACENT TO THE CURB AND POURED AT THE SAME TIME AS THE CURB, THE JOINT BETWEEN THEM SHALL BE A TROWELED JOINT WITH A MIN. 1/2" RADIUS.

NO.	REVISIONS	DATE	BY
1	CHANGE SUBGRADE &	01/28/02	PB
2	1" 2 BASE AGG. & NOTES	10/07/02	SCH

DWG: F12.dwg

Department of Public Works
CLARK COUNTY
WASHINGTON
proud past, promising future

SIDEWALK DETAIL — STANDARD F12
APPROVED — Peter Capen, COUNTY ENGINEER — 01/01/04 DATE
PLAN No. / DESIGNED DB / DRAWN KB / DATE 10/08/02

NOTES:

1. EXISTING CURB, GUTTER, AND SIDEWALK TO BE SAWCUT AND REMOVED FOR INSTALLATION OF NEW RAMP.
2. RAMPS TO BE POURED SEPARATELY FROM SIDEWALK.
3. RAMP SLOPES SHALL NOT BE STEEPER THAN 12H:1V.

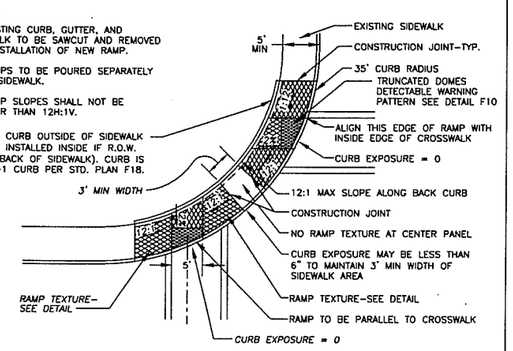

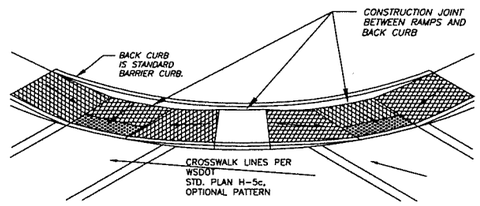

THIS TYPE OF RAMP IS ONLY TO BE USED IN EXISTING RESTRICTED RIGHT-OF-WAY AREAS, DOUBLE RAMP SHOWN- SINGLE RAMP MAY BE USED AT SOME INSTALLATIONS.

NO.	REVISIONS	DATE	BY
1	TRUNCATED DOMES	8/14/03	SCH

DWG: F2b.dwg

Department of Public Works
CLARK COUNTY
WASHINGTON
proud past, promising future

TYPE 2 ALTERNATE RAMP - DOUBLE — F2b
APPROVED — Peter Capen, COUNTY ENGINEER — 8/22/00 DATE
DESIGNED DB / DRAWN KB / DATE 7/24/00

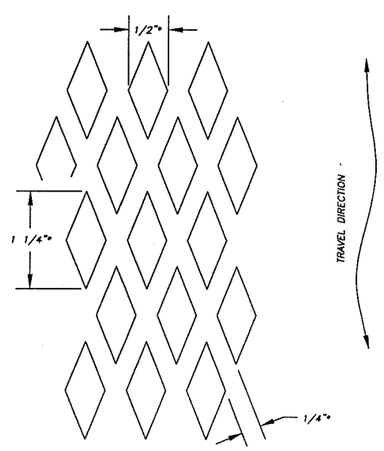

* NOMINAL DIMENSIONS

RAMP TEXTURE DETAIL

RAMP TEXTURE IS TO BE DONE WITH AN EXPANDED METAL GRATE PLACED AND REMOVED FROM WET CONCRETE TO LEAVE A DIAMOND PATTERN AS SHOWN. THE LONG AXIS OF THE DIAMOND PATTERN SHALL BE IN THE DIRECTION OF TRAVEL. GROOVES SHALL BE 1/8" DEEP AND 1/4" WIDE. ALTERNATIVE TEXTURE PATTERNS SHALL BE APPROVED BY REVIEWING AUTHORITY BEFORE USE.

NO.	REVISIONS	DATE	BY

DWG: F11.dwg

Department of Public Works
CLARK COUNTY
WASHINGTON
proud past, promising future

RAMP TEXTURE DETAIL — F11
APPROVED — Peter Capen, COUNTY ENGINEER — 8/22/00 DATE
DESIGNED DB / DRAWN KB / DATE 7/24/00

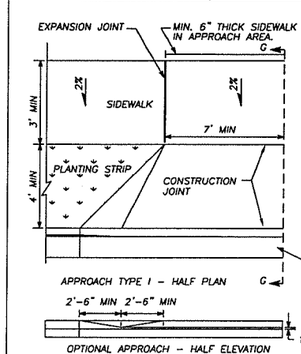

NOTE: USE TYPE 1 APPROACH ONLY WHEN A SIDEWALK IS USED AT THE BACK OF THE APPROACH.

NOTES:

1. A MINIMUM 3' WIDE ACCESSIBLE ROUTE SHALL BE MAINTAINED IN ALL PEDESTRIAN ACCESSIBLE AREAS.
2. CONTRACTION POINTS SHALL BE PLACED ALONG SIDEWALKS IN ACCORD WITH SIDEWALK DETAIL. ALL JOINTS SHALL BE CLEANED AND EDGED.
3. CHANGES IN LEVEL UP TO 1/4" MAY BE VERTICAL AND WITHOUT EDGE TREATMENT. CHANGES IN LEVEL BETWEEN 1/4" AND 1/2" SHALL BE BEVELED WITH A SLOPE NO GREATER THAN 2:1.
4. CEMENT CONCRETE APPROACHES SHALL BE CONSTRUCTED OF AIR-ENTRAINED CLASS 3000 AND MAY BE POURED INTEGRAL WITH CURB.
5. EXISTING CURB, GUTTER, AND SIDEWALK TO BE SAWCUT AND REMOVED FOR INSTALLATION OF APPROACH.
6. COMMERCIAL DRIVEWAY REQUIRES REINFORCING STEEL (6"x6" 10 GA WIRE MESH) MIN. 3" COVER.
7. 3" DEPTH 3/4"-0 CRUSHED AGGREGATE BASE COMPACTED TO 95% OF MAX. DRY DENSITY.
8. SUBGRADE PREPARATION PER WSDOT STD. SPEC. 2-06.3(1).

CEMENT CONCRETE CURB AND GUTTER SECTION SHOWN (SEE STANDARD PLANS FOR OTHER CURB DESIGNS).

1/2" MAX (BEVEL WHERE POSSIBLE) SEE NOTE 3.

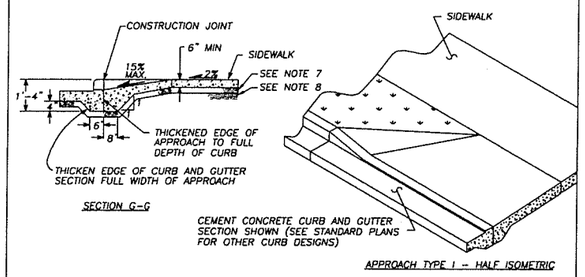

NO.	REVISIONS	DATE	BY
1	NOTE #6, 7, 8	10/09/02	SCH

DWG: F14.dwg

Department of Public Works
CLARK COUNTY
WASHINGTON
proud past, promising future

DETAIL - TYPE 1 CEMENT CONCRETE APPROACH — F14
APPROVED — Peter Capen, COUNTY ENGINEER — 8/22/00 DATE
DESIGNED DB / DRAWN KB / DATE 7/24/00

DESIGNED	ME/JM
DRAWN	KB/RK
CRP	301422
HOR.	SEE SHEET
VERT.	SEE SHEET
DATE	07/31/05
DWG:	RD1
SHEET	27 OF 151

CALL 48 HOURS BEFORE YOU DIG 1-800-553-4344 "It's the Law" NORTHWEST UTILITIES NOTIFICATION CENTER

STATE OF WASHINGTON — MICHAEL E. MARCICH — 29050 — REGISTERED PROFESSIONAL ENGINEER — EXPIRES: MAY 28, 2005

ENGINEERING PROGRAM DESIGN SECTION

ST JOHNS ROAD (NE 50TH AVE TO NE 72ND AVE)

ROADWAY DETAILS

PRELIMINARY

CLARK COUNTY WASHINGTON
proud past, promising future

n:\CIPPROJECTS\301422-STJohns-50thTo72nd\DESIGN\DWGS\RD01-2.dwg, 7/27/2005 3:00:00 PM, kerlinr

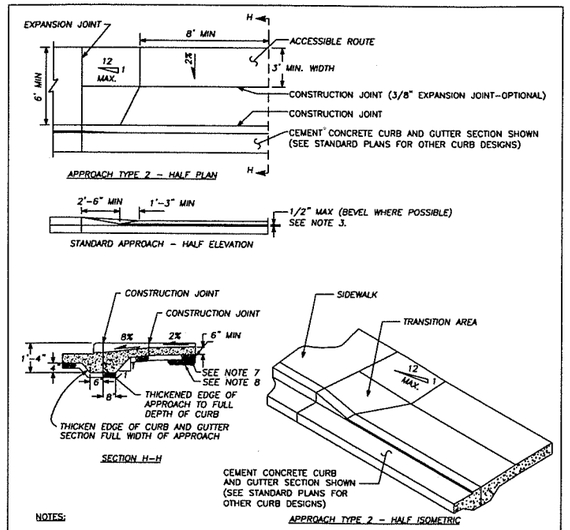

NOTES:

1. A MINIMUM 3' WIDE ACCESSIBLE ROUTE SHALL BE MAINTAINED IN ALL PEDESTRIAN ACCESSIBLE AREAS.
2. CONTRACTION JOINTS SHALL BE PLACED ALONG SIDEWALKS IN ACCORD WITH SIDEWALK DETAIL. ALL JOINTS SHALL BE CLEANED AND EDGED.
3. CHANGES IN LEVEL UP TO 1/4" MAY BE VERTICAL AND WITHOUT EDGE TREATMENT. CHANGES IN LEVEL BETWEEN 1/4" AND 1/2" SHALL BE BEVELED WITH A SLOPE NO GREATER THAN 2:1.
4. CEMENT CONCRETE APPROACHES SHALL BE CONSTRUCTED OF AIR-ENTRAINED CONCRETE CLASS 3000 AND MAY BE POURED INTEGRAL WITH CURB.
5. EXISTING CURB, GUTTER AND SIDEWALK TO BE SAWCUT AND REMOVED FOR INSTALLATION OF APPROACH.
6. COMMERCIAL DRIVEWAY REQUIRES REINFORCING STEEL (6"x6" 10 GA WIRE MESH) MIN. 3" COVER
7. 3" DEPTH 3/4"-0 CRUSHED AGGREGATE BASE COMPACTED TO 95% OF MAX. DRY DENSITY.
8. SUBGRADE PREPARATION PER WSDOT STD. SPEC. 2-06.3(1).

NO.	REVISIONS	DATE	BY
1	NOTES #6, 7, 8	10/08/02	SCH

DWG: F15.DWG

Department of Public Works
CLARK COUNTY WASHINGTON
proud past, promising future

CEMENT CONCRETE APPROACH DETAIL - TYPE 2

F15

APPROVED
Peter Capen
COUNTY ENGINEER
8/22/00
DATE

DESIGNED DB
DRAWN KB
DATE 7/24/00

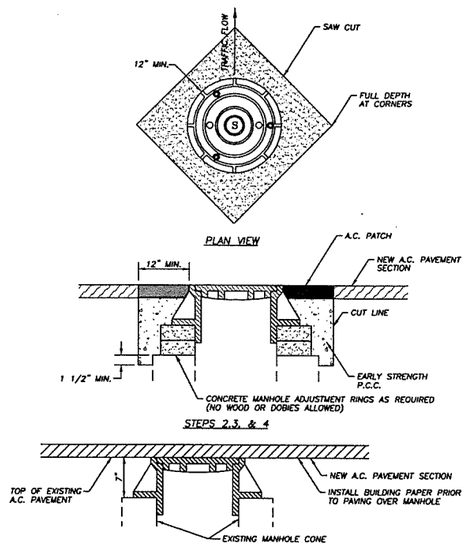

STEP 1 COVER EXSITING MANHOLE WITH BUILDING PAPER AND CONSTRUCT A.C. PAVEMENT OVER TOP OF MANHOLE.
STEP 2 SAW CUT AND REMOVE PAVEMENT AROUND MANHOLE 12" MIN. FROM MANHOLE FRAME.
STEP 3 RAISE MANHOLE FRAME AND COVER USING CONCRETE RINGS AND MECHANICAL ADJUSTMENT DEVICES TO FINISH GRADE MATCHING PROFILE AND CROSS SLOPE.
STEP 4 BACKFILL WITH EARLY STRENGTH P.C.C. AND A.C. TO DEPTHS AS DIRECTED.

NO.	REVISIONS	DATE	BY

DWG: F27.dwg

Department of Public Works
CLARK COUNTY WASHINGTON
proud past, promising future

MANHOLES ADJUSTMENT DETAIL

F27

APPROVED
Peter Capen
COUNTY ENGINEER
9/12/00
DATE

DESIGNED
DRAWN
DATE 7/20/00

CEMENT CONCRETE APPROACH SCHEDULE

STATION	WIDTH	TYPE
ST. JOHNS ROAD		
14+59 LT	36'	2
14+74 RT	30'	2
16+47 LT	40'	2
18+60 LT	28'	2
26+62 LT	18'	1
27+53 LT	20'	1
33+20 RT	36'	1
34+34 RT	18'	1
35+32 RT	18'	1
37+35 RT	20'	1
60+93 LT	18'	2
62+05 RT	40'	1
65+52 RT	20'	1
69+61 LT	33'	1
70+61 RT	18'	1
75+02 LT	40'	1
75+32 RT	18'	1
76+33 LT	18'	1
77+40 LT	20'	1
77+58 RT	18'	1
78+93 LT	20'	2

STATION	WIDTH	TYPE
NE 65TH AVENUE		
0+95 RT	20'	2
1+50 LT	15'	2
NE 109TH STREET		
10+33 RT	20'	2
11+55 LT	31'	2
12+05 LT	40'	2
16+73 RT	18'	2
NE 72ND AVENUE		
84+05 LT	30'	2
92+29 LT	40'	2
93+47 RT	36'	2
93+61 LT	30'	2
94+17 LT	27'	2
94+64 LT	40'	2
NE 99TH STREET		
1+33 RT	33'	2

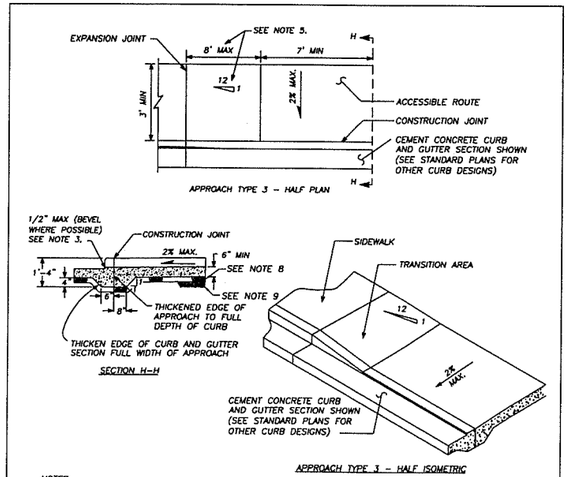

NOTES:

1. A MINIMUM 3' WIDE ACCESSIBLE ROUTE SHALL BE MAINTAINED IN ALL PEDESTRIAN ACCESSIBLE AREAS.
2. CONTRACTION JOINTS SHALL BE PLACED ALONG SIDEWALKS IN ACCORD WITH SIDEWALK DETAIL. ALL JOINTS SHALL BE CLEANED AND EDGED.
3. CHANGES IN LEVEL UP TO 1/4" MAY BE VERTICAL AND WITHOUT EDGE TREATMENT. CHANGES IN LEVEL BETWEEN 1/4" AND 1/2" SHALL BE BEVELED WITH A SLOPE NO GREATER THAN 2:1.
4. TRANSITION AREA TO BE SLOPED AT 1v TO 12h, UNLESS STREET GRADE WOULD CREATE A TRANSITION LENGTH GREATER THAN 8', THEN THE MAXIMUM LENGTH OF 8' GOVERNS SLOPE.
5. CEMENT CONCRETE APPROACHES SHALL BE CONSTRUCTED OF AIR-ENTRAINED CONCRETE CLASS 3000 AND MAY BE POURED INTEGRAL WITH CURB.
6. EXISTING CURB, GUTTER AND SIDEWALK TO BE SAWCUT AND REMOVED FOR INSTALLATION OF APPROACH.
7. COMMERCIAL DRIVEWAY REQUIRES REINFORCING STEEL (6"x6"x10 GA MESH) MIN. 3" COVER.
8. 3" DEPTH 3/4"-0 CRUSHED AGGREGATE BASE COMPACTED TO 95% OF MAX. DRY DENSITY.
9. SUBGRADE PREPARED PER WSDOT STD. SPEC. 2-06.3(1)

NO.	REVISIONS	DATE	BY
1	NOTE # 7, 8, 9	7/22/02	SCH

DWG: F16.dwg

Department of Public Works
CLARK COUNTY WASHINGTON
proud past, promising future

CEMENT CONCRETE APPROACH DETAIL - TYPE 3

F16

APPROVED
Peter Capen
COUNTY ENGINEER
8/22/00
DATE

DESIGNED DB
DRAWN KB
DATE 7/24/00

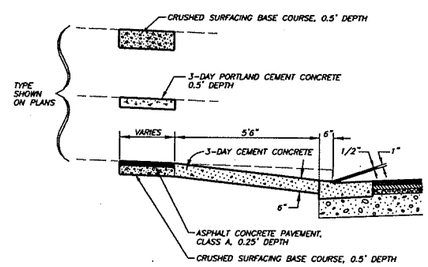

SECTION A-A

NTS

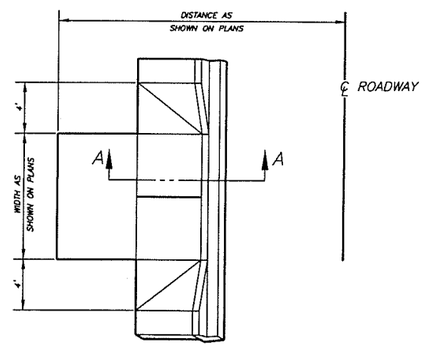

TYPICAL DRIVEWAY ENTRANCE

NTS

PRELIMINARY

DESIGNED ME/JM
DRAWN KB/RK
CRP 301422
HOR. SEE SHEET
VERT. SEE SHEET
DATE 07/31/05
DWG: R02
SHEET 28 OF 151

CALL 48 HOURS BEFORE YOU DIG 1-800-553-4344 "It's the Law" NORTHWEST UTILITIES NOTIFICATION CENTER

STANLEY M. EMRICK STATE OF WASHINGTON 28035 REGISTERED PROFESSIONAL ENGINEER EXPIRES: MAY 26, 2007

ENGINEERING PROGRAM
DESIGN SECTION

ST JOHNS ROAD (NE 50TH AVE TO NE 72ND AVE)
ROADWAY DETAILS

proud past, promising future
CLARK COUNTY WASHINGTON

n:\CIPPROJECTS\301422-STJohns-50th-To72nd\DESIGN\DWGS\RD01-2.dwg, 7/27/2005 3:01:29 PM, kerlinr

NOTES:

1. MANHOLES SHALL BE CONSTRUCTED IN ACCORDANCE WITH AASHTO M199 UNLESS OTHERWISE SHOWN ON PLANS OR NOTED IN THE WSDOT/APWA STANDARD SPECIFICATIONS.
2. HANDHOLDS IN ADJUSTMENT SECTION SHALL HAVE 3" MIN. CLEARANCE. STEPS IN MANHOLE SHALL HAVE 6" MIN. CLEARANCE. SEE PLAN NO. D1.5, "MANHOLE DETAILS". HANDHOLDS SHALL BE PLACED IN ALTERNATING GRADE RINGS OR LEVELING BRICK COURSE WITH A MIN. OF ONE HAND HOLD BETWEEN THE LAST STEP AND THE TOP OF THE MANHOLE.
3. ALL REINFORCED CAST-IN-PLACE CONCRETE SHALL BE CLASS 4000.
4. ALL PRECAST CONCRETE SHALL BE CLASS 4000, NON-REINFORCED CONCRETE IN CHANNEL AND SHELF SHALL BE CLASS 3000.
5. PRECAST BASES SHALL BE FURNISHED WITH CUTOUTS OR KNOCKOUTS. KNOCKOUTS SHALL HAVE WALL THICKNESS OF 2" MIN. UNUSED KNOCKOUTS NEED NOT BE GROUTED IF WALL IS LEFT INTACT. PIPES SHALL BE INSTALLED ONLY IN FACTORY KNOCKOUTS UNLESS OTHERWISE APPROVED BY THE ENGINEER.
6. KNOCKOUT OR CUTOUT HOLE SIZE SHALL EQUAL PIPE OUTER DIAM. PLUS MANHOLE WALL THICKNESS. SEE MANHOLE DIMENSION TABLE BELOW.
7. MANHOLE RINGS AND COVERS SHALL BE IN ACCORDANCE WITH SEC. 7.05 AND MEET THE STRENGTH REQUIREMENTS OF FEDERAL SPECIFICATION RR-F-621D, MATING SURFACES SHALL BE FINISHED TO ASSURE NON-ROCKING FIT WITH ANY COVER POSITION.
8. ALL BASE REINFORCING STEEL SHALL HAVE A MIN. YIELD STRENGTH OF 60,000 PSI AND BE PLACED IN THE UPPER HALF OF THE BASE WITH 1" MIN. CLEARANCE.
9. FOR HEIGHTS OF 12' OR LESS, MIN. SOIL BEARING VALUE SHALL EQUAL 3,300 POUNDS PER SQUARE FOOT. FOR HEIGHTS OVER 12', MIN. SOIL BEARING VALUE SHALL EQUAL 3,800 POUNDS PER SQUARE FOOT.
10. FOR DETAILS SHOWING GRADE RING, LADDER, STEPS, HANDHOLDS, AND TOP SLABS, SEE PLAN NO. D1.5, "MANHOLE DETAILS."
11. INSIDE DROP MAXIMUM TO BE 4' VERTICAL DISTANCE I.E. TO I.E.
12. KNOCKOUTS TO BE USED WHEN STUB OUT PIPE IS 3" OR LESS.
13. MINIMUM 0.20' FALL BETWEEN INLET AND OUTLET. ANY REDUCTION IN THIS DESIGN REQUIREMENT MUST BE APPROVED BY REVIEWING AUTHORITY.
14. SEE THE WSDOT/APWA STANDARD SPECIFICATIONS SEC. 7-05.3 FOR JOINT REQUIREMENTS.

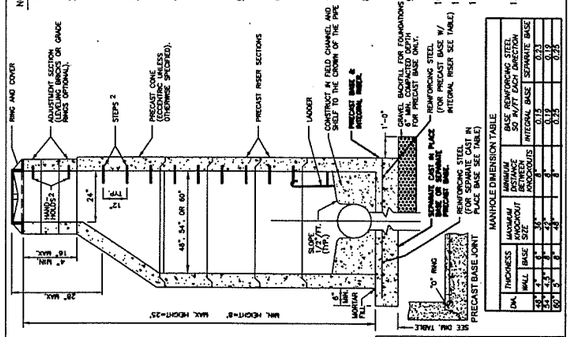

MANHOLE DIMENSION TABLE

DIM.	THICKNESS WALL	THICKNESS BASE	MAXIMUM KNOCKOUT SIZE	MINIMUM DISTANCE BETWEEN KNOCKOUTS	BASE REINFORCING STEEL SQ IN/FT EACH DIRECTION INTEGRAL BASE	SEPARATE BASE
48"	4.5"	8"	36"	8"	0.15	0.23
54"	4.5"	8"	42"	8"	0.15	0.23
60"	4.5"	8"	48"	8"	0.15	0.23
72"	5.5"	9"	60"	12"	0.19	0.29
96"	6.5"	9"	72"	12"	0.19	0.29

Department of Public Works
CLARK COUNTY
WASHINGTON
proud past, promising future

STANDARD MANHOLE TYPE 1
48", 54", & 60"

APPROVED
Peter Capen
COUNTY ENGINEER
01/01/04
DATE

STANDARD D1.1
PLAN No.
DESIGNED BCH
DRAWN BCH
DATE 01/07/03

DWG: D1-1.DWG

NO.	REVISIONS	DATE	BY

NOTES:

1. MANHOLES SHALL BE CONSTRUCTED IN ACCORDANCE WITH AASHTO M199 UNLESS OTHERWISE SHOWN ON PLANS OR NOTED IN THE WSDOT/APWA STANDARD SPECIFICATIONS.
2. HANDHOLDS IN ADJUSTMENT SECTION SHALL HAVE 3" MIN. CLEARANCE. STEPS IN MANHOLE SHALL HAVE 6" MIN. CLEARANCE. SEE PLAN NO. D1.5, "MANHOLE DETAILS". HANDHOLDS SHALL BE PLACED IN ALTERNATING GRADE RINGS OR LEVELING BRICK COURSE WITH A MIN. OF ONE HAND HOLD BETWEEN THE LAST STEP AND THE TOP OF THE MANHOLE.
3. ALL REINFORCED CAST-IN-PLACE CONCRETE SHALL BE CLASS 4000.
4. ALL PRECAST CONCRETE SHALL BE CLASS 4000, NON-REINFORCED CONCRETE IN CHANNEL AND SHELF SHALL BE CLASS 3000.
5. PRECAST BASES SHALL BE FURNISHED WITH CUTOUTS OR KNOCKOUTS. KNOCKOUTS SHALL HAVE WALL THICKNESS OF 2" MIN. UNUSED KNOCKOUTS NEED NOT BE GROUTED IF WALL IS LEFT INTACT. PIPES SHALL BE INSTALLED ONLY IN FACTORY KNOCKOUTS UNLESS OTHERWISE APPROVED BY THE ENGINEER.
6. KNOCKOUT OR CUTOUT HOLE SIZE SHALL EQUAL PIPE OUTER DIAM. PLUS MANHOLE WALL THICKNESS. SEE MANHOLE DIMENSION TABLE BELOW.
7. MANHOLE RINGS AND COVERS SHALL BE IN ACCORDANCE WITH SEC. 7.05 AND MEET THE STRENGTH REQUIREMENTS OF FEDERAL SPECIFICATION RR-F-621D, MATING SURFACES SHALL BE FINISHED TO ASSURE NON-ROCKING FIT WITH ANY COVER POSITION.
8. ALL BASE REINFORCING STEEL SHALL HAVE A MIN. YIELD STRENGTH OF 60,000 PSI AND BE PLACED IN THE UPPER HALF OF THE BASE WITH 1" MIN. CLEARANCE.
9. FOR HEIGHTS OF 12' OR LESS, MIN. SOIL BEARING VALUE SHALL EQUAL 3,300 POUNDS PER SQUARE FOOT. FOR HEIGHTS OVER 12', MIN. SOIL BEARING VALUE SHALL EQUAL 3,800 POUNDS PER SQUARE FOOT.
10. FOR DETAILS SHOWING GRADE RING, LADDER, STEPS, HANDHOLDS, AND TOP SLABS, SEE PLAN NO. D1.5, "MANHOLE DETAILS."
11. INSIDE DROP MAXIMUM TO BE 4' VERTICAL DISTANCE I.E. TO I.E.
12. KNOCKOUTS TO BE USED WHEN STUB OUT PIPE IS 3" OR LESS.
13. MINIMUM 0.20' FALL BETWEEN INLET AND OUTLET. ANY REDUCTION IN THIS DESIGN REQUIREMENT MUST BE APPROVED BY REVIEWING AUTHORITY.
14. SEE THE WSDOT/APWA STANDARD SPECIFICATIONS SEC. 7-05.3 FOR JOINT REQUIREMENTS.

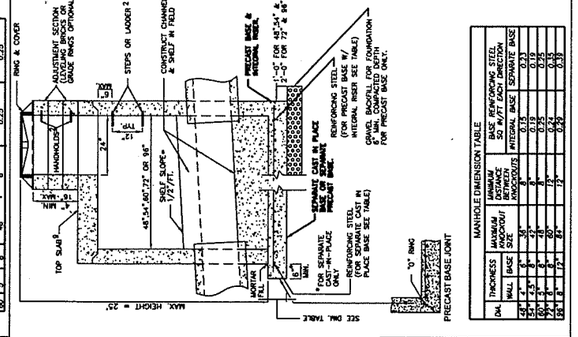

MANHOLE DIMENSION TABLE

DIM.	THICKNESS WALL	THICKNESS BASE	MAXIMUM KNOCKOUT SIZE	MINIMUM DISTANCE BETWEEN KNOCKOUTS	BASE REINFORCING STEEL SQ IN/FT EACH DIRECTION INTEGRAL BASE	SEPARATE BASE
48"	4.5"	8"	36"	8"	0.15	0.23
54"	4.5"	8"	42"	8"	0.15	0.23
60"	4.5"	8"	48"	8"	0.15	0.23
72"	5.5"	9"	60"	12"	0.19	0.29
96"	6.5"	9"	72"	12"	0.19	0.29

Department of Public Works
CLARK COUNTY
WASHINGTON
proud past, promising future

MANHOLE TYPE 3
48", 54", 60", 72", & 96"

APPROVED
Peter Capen
COUNTY ENGINEER
01/01/04
DATE

STANDARD D1.3
PLAN No.
DESIGNED BCH
DRAWN BCH
DATE 01/07/03

DWG: D1-3.DWG

NO.	REVISIONS	DATE	BY

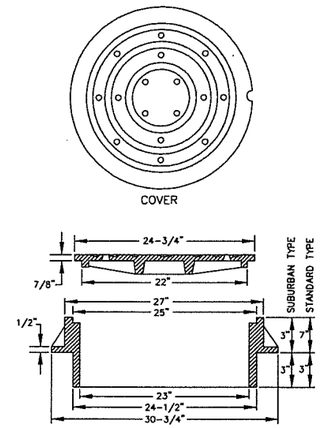

NOTES:

1. USE SUBURBAN TYPE ONLY IN NON-TRAFFIC AREAS, AND ONLY WITH APPROVAL BY COUNTY.
2. COVER MATERIAL TO BE DUCTILE IRON ASTM A536 GRADE 80-55-06
3. FRAME MATERIAL TO BE GRAY CAST IRON ASTM A-48 CLASS 30.
4. SEE WSDOT STANDARD SPECIFICATIONS SEC. 7.05
5. COVER AND FRAME TO BE MACHINED TO A TRUE BEARING ALL AROUND.
6. NOTCH LID FOR LIFTING HOOK.

Department of Public Works
CLARK COUNTY
WASHINGTON
proud past, promising future

STANDARD MANHOLE FRAME AND COVER

APPROVED
Peter Capen
COUNTY ENGINEER
01/01/04
DATE

STANDARD D1.6
PLAN No.
DESIGNED BCH
DRAWN BCH
DATE 08/04/02

DWG: D1-6.DWG

NO.	REVISIONS	DATE	BY

PRELIMINARY

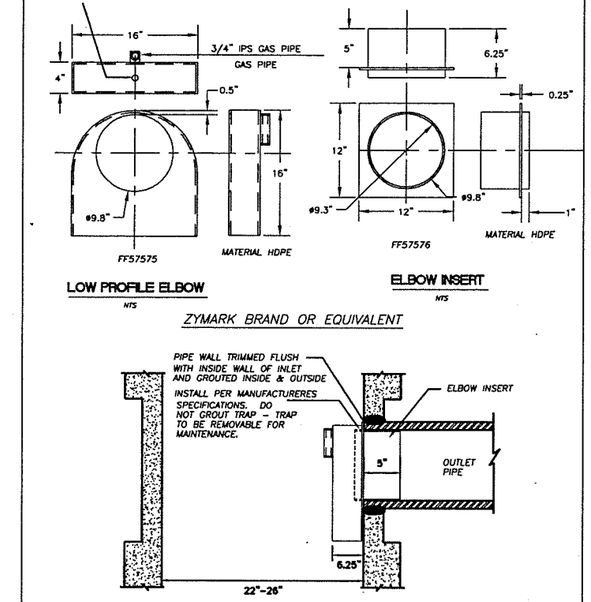

Department of Public Works
CLARK COUNTY
WASHINGTON
proud past, promising future

CATCH BASIN
OUTLET PIPE TRAP

APPROVED
Peter Capen
COUNTY ENGINEER
01/01/04
DATE

STANDARD D2.1
PLAN No.
DESIGNED BCH
DRAWN BCH
DATE 08/23/02

DWG: D2-1.DWG

NO.	REVISIONS	DATE	BY

NOTES:

1. MANHOLES SHALL BE CONSTRUCTED IN ACCORDANCE WITH AASHTO M199 UNLESS OTHERWISE SHOWN ON PLANS OR NOTED IN THE WSDOT/APWA STANDARD SPECIFICATIONS.
2. HANDHOLDS IN ADJUSTMENT SECTION SHALL HAVE 3" MIN. CLEARANCE. STEPS IN MANHOLE SHALL HAVE 6" MIN. CLEARANCE. SEE PLAN NO. D1.5, "MANHOLE DETAILS". HANDHOLDS SHALL BE PLACED IN ALTERNATING GRADE RINGS OR LEVELING BRICK COURSE WITH A MIN. OF ONE HAND HOLD BETWEEN THE LAST STEP AND THE TOP OF THE MANHOLE.
3. ALL REINFORCED CAST-IN-PLACE CONCRETE SHALL BE CLASS 4000.
4. ALL PRECAST CONCRETE SHALL BE CLASS 4000, NON-REINFORCED CONCRETE IN CHANNEL AND SHELF SHALL BE CLASS 3000.
5. PRECAST BASES SHALL BE FURNISHED WITH CUTOUTS OR KNOCKOUTS. KNOCKOUTS SHALL HAVE WALL THICKNESS OF 2" MIN. UNUSED KNOCKOUTS NEED NOT BE GROUTED IF WALL IS LEFT INTACT. PIPES SHALL BE INSTALLED ONLY IN FACTORY KNOCKOUTS UNLESS OTHERWISE APPROVED BY THE ENGINEER.
6. KNOCKOUT OR CUTOUT HOLE SIZE SHALL EQUAL PIPE OUTER DIAM. PLUS MANHOLE WALL THICKNESS. SEE MANHOLE DIMENSION TABLE BELOW.
7. MANHOLE RINGS AND COVERS SHALL BE IN ACCORDANCE WITH SEC. 7.05 AND MEET THE STRENGTH REQUIREMENTS OF FEDERAL SPECIFICATION RR-F-621D, MATING SURFACES SHALL BE FINISHED TO ASSURE NON-ROCKING FIT WITH ANY COVER POSITION.
8. ALL BASE REINFORCING STEEL SHALL HAVE A MIN. YIELD STRENGTH OF 60,000 PSI AND BE PLACED IN THE UPPER HALF OF THE BASE WITH 1" MIN. CLEARANCE.
9. FOR HEIGHTS OF 12' OR LESS, MIN. SOIL BEARING VALUE SHALL EQUAL 3,300 POUNDS PER SQUARE FOOT. FOR HEIGHTS OVER 12', MIN. SOIL BEARING VALUE SHALL EQUAL 3,800 POUNDS PER SQUARE FOOT.
10. FOR DETAILS SHOWING GRADE RING, LADDER, STEPS, HANDHOLDS, AND TOP SLABS, SEE PLAN NO. D1.5, "MANHOLE DETAILS."
11. INSIDE DROP MAXIMUM TO BE 4' VERTICAL DISTANCE I.E. TO I.E.
12. KNOCKOUTS TO BE USED WHEN STUB OUT PIPE IS 3" OR LESS.
13. MINIMUM 0.20' FALL BETWEEN INLET AND OUTLET. ANY REDUCTION IN THIS DESIGN REQUIREMENT MUST BE APPROVED BY REVIEWING AUTHORITY.
14. SEE THE WSDOT/APWA STANDARD SPECIFICATIONS SEC. 7-05.3 FOR JOINT REQUIREMENTS.

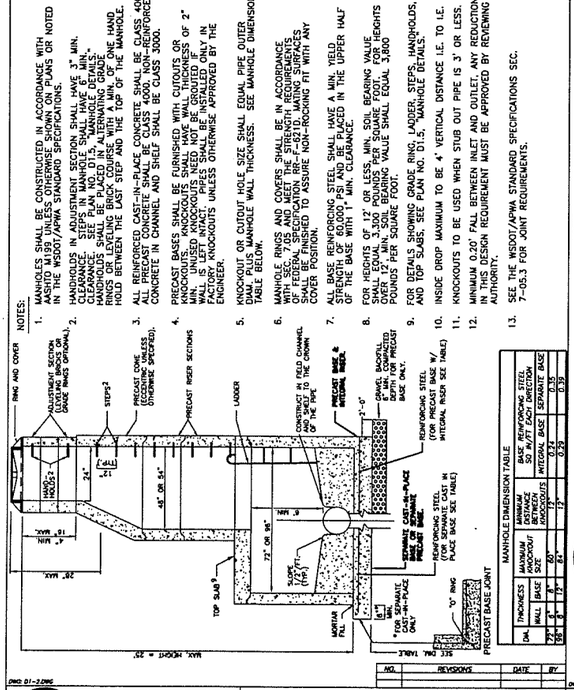

MANHOLE DIMENSION TABLE

DIM.	THICKNESS WALL	THICKNESS BASE	MAXIMUM KNOCKOUT SIZE	MINIMUM DISTANCE BETWEEN KNOCKOUTS	BASE REINFORCING STEEL SQ IN/FT EACH DIRECTION INTEGRAL BASE	SEPARATE BASE
48"	4.5"	8"	36"	8"	0.15	0.23
54"	4.5"	8"	42"	8"	0.15	0.23
60"	4.5"	8"	48"	8"	0.15	0.23
72"	5.5"	9"	60"	12"	0.19	0.29
96"	6.5"	9"	72"	12"	0.19	0.29

Department of Public Works
CLARK COUNTY
WASHINGTON
proud past, promising future

MANHOLE TYPE 2
72" & 96"

APPROVED
Peter Capen
COUNTY ENGINEER
01/01/04
DATE

STANDARD D1.2
PLAN No.
DESIGNED BCH
DRAWN BCH
DATE 01/07/03

DWG: D1-2.DWG

NO.	REVISIONS	DATE	BY

NOTES:

1. PROPRIETARY MANHOLE HANDHOLDS AND STEPS MAY BE PROVIDED IN LIEU OF THOSE CONFORM TO SEC. R, ASTM C478, AASHTO M199 AND MEET ALL WISHA REQUIREMENTS.
2. MANHOLE STEP/HANDHOLD LEGS SHALL BE PARALLEL OR APPROXIMATELY RADIAL AT THE MANHOLE WALL. HANDHOLDS SHALL BE SIMILAR. ALL STEPS IN ANY MANHOLE SHALL BE SIMILAR. PENETRATION OF OUTER WALL BY A LEG IS PROHIBITED.
3. HANDHOLDS AND STOPS SHALL HAVE "DROP" OR "PEAR" PROTUBERANCES TO PREVENT SIDEWAYS SLIP.
4. LADDERS OR STEPS SHALL EXTEND TO WITHIN 16" OF BOTTOM OF MANHOLE.
5. HANGING LADDERS SHALL BE PERMANENTLY FASTENED AT TOP BY HANGING ON STEP OR BOLTING OR EMBEDDING IN CONCRETE. ON BOTTOM BY EMBEDDING IN CONCRETE BASE.
6. ADDITIONAL SAFETY FEATURES MAY BE REQUIRED IN VERY DEEP OR UNUSUAL STRUCTURES.

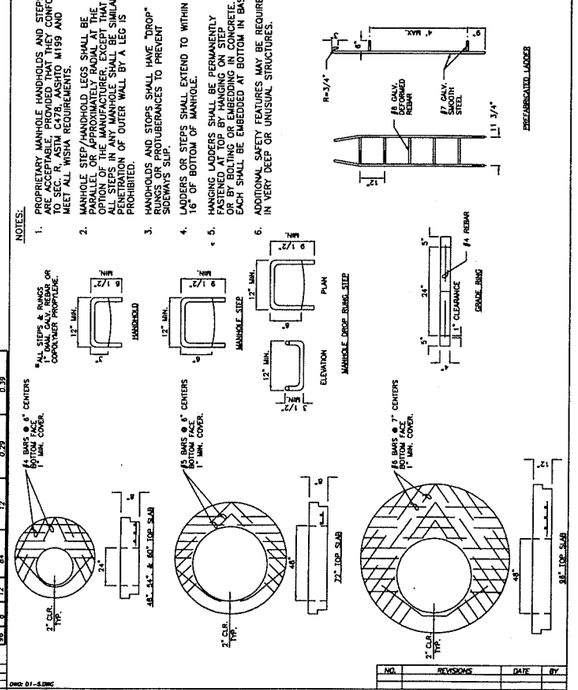

Department of Public Works
CLARK COUNTY
WASHINGTON
proud past, promising future

MANHOLE DETAILS

APPROVED
Peter Capen
COUNTY ENGINEER
01/01/04
DATE

STANDARD D1.5
PLAN No.
DESIGNED BCH
DRAWN BCH
DATE 08/08/02

DWG: D1-5.DWG

NO.	REVISIONS	DATE	BY

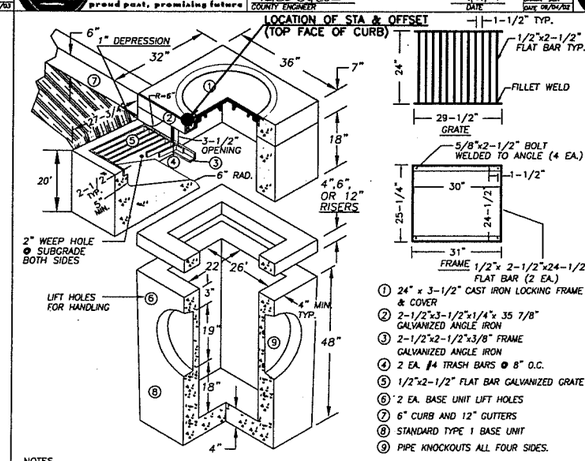

NOTES

1. COMBINATION CURB INLET TO BE CONSTRUCTED IN ACCORDANCE WITH ASTM C478 & C890 UNLESS SHOWN ON PLANS OR NOTED IN STANDARD SPECIFICATIONS.
2. REINFORCING FOR INLET UNIT, 3 EA. #4 HORZONTAL BARS; REINFORCING FOR TOP UNIT, 2 EA. #3 HORZONTAL BARS; REINFORCING FOR INLET SLOPED BASE, 4x4 MESH.
3. ALL REBAR TO MEET ASTM A615 GRADE 60.
4. AS AN ACCEPTABLE ALTERNATIVE TO REBAR, WELDED WIRE FABRIC HAVING A MIN. AREA OF 0.12 SOAURE INCHES PER FOOT MAY BE USED. WELDED WIRE FABRIC SHALL COMPLY TO ASTM A497. WIRE FABRIC SHALL NOT BE PLACED IN KNOCKOUTS.
5. ALL REINFORCED CAST-IN-PLACE CONCRETE SHALL BE CLASS 4,000.
6 PRECAST BASES SHALL BE FURNISHED WITH CUTOUTS OR KNOCKOUTS. KNOCKOUTS SHALL HAVE A WALL THICKNESS OF 2" MIN. ALL PIPE SHALL BE INSTALLED IN FACTORY PROVIDED KNOCKOUTS. UNUSED KNOCKOUTS NEED NOT BE GROUTED IF WALL IS LEFT INTACT.
7. KNOCKOUTS OR CUTOUT HOLE SIZE IS EQUAL TO PIPE OUTER DIAM. PLUS INLET WALL THICKNESS.
8. ROUND KNOCKOUTS MAY BE ON ALL 4 SIDES WITH MAX. DIAM. OF 17".
9. THE MAX. DEPTH FROM THE FINISHED GRADE TO THE PIPE INVERT IS 5'-0".
10. ANY PROTUDING ENDS OF PIPES SHALL BE TRIMMED FLUSH WITH THE INSIDE WALLS AND GROUTED TO THE SATISFACTION OF ENGINEER.
11. GRATE TO HAVE 1" DEPRESSION AT GUTTER INLET WITH GUTTER TO BE TAPERED DOWN TO INLET.
12. INSTALL REMOVABLE APWA TYPE 60A TRAP OR EQUAL, SEE STD. PLAN D2.1.
13. CONTRACTOR SHALL HAVE THE OPTION OF FURNISHING PRECAST OR CAST-IN-PLACE INLET STRUCTURES. UNLESS SPECIFIED.
14. SEE STD. PLAN 4.1 FOR BASIN GUTTER PAN DETAIL.

Department of Public Works
CLARK COUNTY
WASHINGTON
proud past, promising future

STANDARD TYPE 1
COMBINATION CURB INLET

APPROVED
Peter Capen
COUNTY ENGINEER
01/01/04
DATE

STANDARD D3.0
PLAN No.
DESIGNED BCH
DRAWN BCH
DATE 08/08/02

DWG: D3-0.DWG

NO.	REVISIONS	DATE	BY

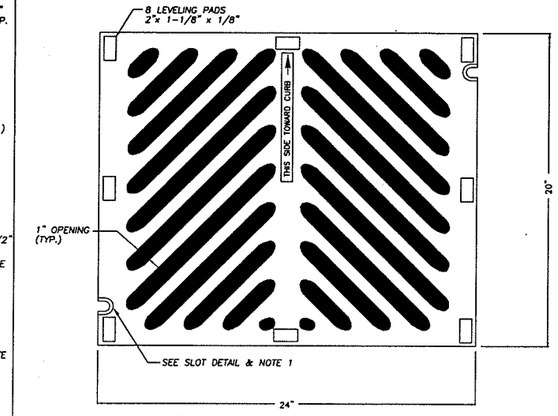

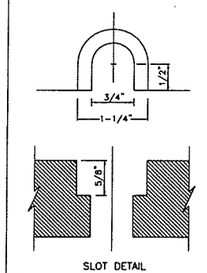

NOTES

1. WELDING NOT PERMITTED
2. USE VANED GRATE PER STD. PLAN D4.4 WHERE LONGITUDINAL SLOPE EXCEEDS 4%.
3. WHEN BOLT DOWN GRATES ARE SPECIFIED, PROVIDE TWO SLOTS IN THE GRATE THAT ARE VERTICALLY ALIGNED WITH THE HOLES IN THE FRAME. LOCATION OF BOLT DOWN SLOTS VARIES AMONG DIFFERENT MANUFACTURERS.
4. REFER TO WSDOT STANDARD SPECIFICATION 9-05.15(2) FOR ADDITIONAL REQUIREMENTS.
5. FOR FRAME DETAIL, SEE STD. PLAN D4.2
6. THE THICKNESS OF THE GRATE SHALL NOT EXCEED 1-5/8".

Department of Public Works
CLARK COUNTY
WASHINGTON
proud past, promising future

HERRINGBONE GRATE
FOR CATCH BASIN

APPROVED
Peter Capen
COUNTY ENGINEER
01/01/04
DATE

STANDARD D4.3
PLAN No.
DESIGNED BCH
DRAWN BCH
DATE 01/07/03

DWG: D4-3.dwg

NO.	REVISIONS	DATE	BY

CALL 48 HOURS BEFORE YOU DIG
1-800-553-4344
"It's the Law"
NORTHWEST UTILITY NOTIFICATION CENTER

DESIGNED	ME/JM
DRAWN	KB/RK
CRP	301422
HOR.	SEE SHEET
VERT.	SEE SHEET
DATE	07/31/05
DWG:	DD1
SHEET	29 OF 151

STATE OF WASHINGTON 31148 REGISTERED PROFESSIONAL ENGINEER
EXPIRES:MAY 7, 2007

ENGINEERING PROGRAM
DESIGN SECTION
ST JOHNS ROAD (NE 50TH AVE TO NE 72ND AVE)
DRAINAGE DETAILS

CLARK COUNTY
WASHINGTON
proud past, promising future

n:\CIPVROJECTS\301422-STJohns-50thTo72nd\DESIGN\DWGS\DD1-2.dwg, 7/27/2005 3:02:19 PM, kerlinr

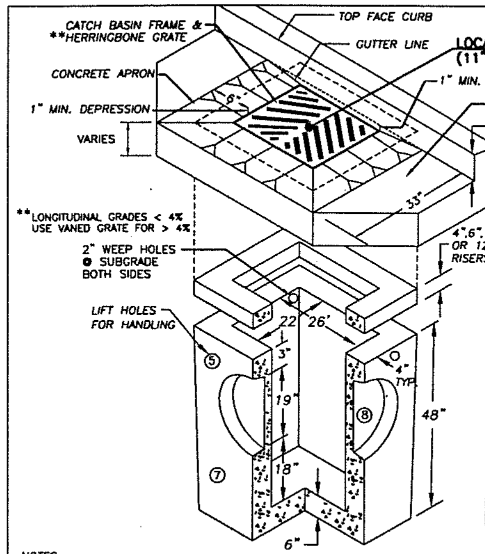

PIPE MATERIAL	MAXIMUM INSIDE DIAMETER
REINFORCED OR PLAIN CONCRETE	18"
ALL METAL PIPE	21"
CPSSP * (Std. Spec. 9-05.20	18"
SOLID WALL PVC (Std. Spec. 9-05.12(1)	21"
PROFILE WALL PVC (Std. Spec. 9-05.12(2)	21"

PIPE ALLOWANCES

* CORRUGATED POLYETHYLENE STORM SEWER PIPE

NOTES:

1. CURB INLET TO BE CONSTRUCTED IN ACCORDANCE WITH ASTM C478 (AASHTO) M 199) & C890 UNLESS SHOWN ON PLANS OR NOTED IN STANDARD SPECIFICATIONS.
2. REINFORCING FOR INLET UNIT, 3 EA. #4 HORIZONTAL BARS.
3. REINFORCING FOR TOP UNIT, 2 EA. #3 HORIZONTAL BARS.
4. ALL REBAR TO MEET ASTM A615 GRADE 60.
5. AS AN ACCEPTABLE ALTERNATIVE TO REBAR, WELDED WIRE FABRIC HAVING A MIN. AREA OF 0.12 SQUARE INCHES PER FOOT MAY BE USED. WELDED WIRE FABRIC SHALL COMPLY TO ASTM A497. WIRE FABRIC SHALL NOT BE PLACED IN KNOCKOUTS.
6. ALL REINFORCED CAST-IN-PLACE CONCRETE SHALL BE CLASS 4,000.
7. PRECAST BASES SHALL BE FURNISHED WITH CUTOUTS OR KNOCKOUTS. KNOCKOUTS SHALL HAVE A WALL THICKNESS OF 2" MIN. ALL PIPE SHALL BE INSTALLED IN FACTORY PROVIDED KNOCKOUTS. UNUSED KNOCKOUTS NEED NOT BE GROUTED IF WALL IS LEFT INTACT.
8. KNOCKOUTS OR CUTOUT HOLE SIZE IS EQUAL TO PIPE OUTER DIAM. PLUS INLET WALL THICKNESS.
9. ROUND KNOCKOUTS MAY BE ON ALL 4 SIDES WITH MAX. DIAM. OF 20".
10. THE MAX. DEPTH FROM THE FINISHED GRADE TO THE PIPE INVERT IS 5'-0".
11. ANY PROTRUDING ENDS OF PIPES SHALL BE TRIMMED FLUSH WITH THE INSIDE WALLS AND GROUTED TO THE SATISFACTION OF ENGINEER.
12. CATCH BASIN FRAME AND GRATE SHALL BE IN ACCORDANCE WITH WDOT STANDARD SPECIFICATIONS AND MEET THE STRENGTH REQUIREMENTS OF FEDERAL SPECIFICATION RR-F-621D. MATING SURFACES SHALL BE FINISHED TO ASSURE NON-ROCKING FIT WITH ANY COVER POSITION.
13. FRAME MAY BE INSTALLED WITH FLANGE DOWN OR CAST INTO RISER.
14 INSTALL REMOVABLE APWA TYPE 60A TRAP OR EQUAL. SEE STD. PLAN D2.1.
15. CONTRACTOR SHALL HAVE THE OPTION OF FURNISHING PRECAST OR CAST-IN-PLACE INLET STRUCTURES, UNLESS SPECIFIED.

DWG: D4-0.DWG

Department of Public Works — CLARK COUNTY WASHINGTON — proud past, promising future

STANDARD CATCH BASIN TYPE 1 — APPROVED — COUNTY ENGINEER — 01/01/04 DATE — STANDARD D4.0 PLAN No.

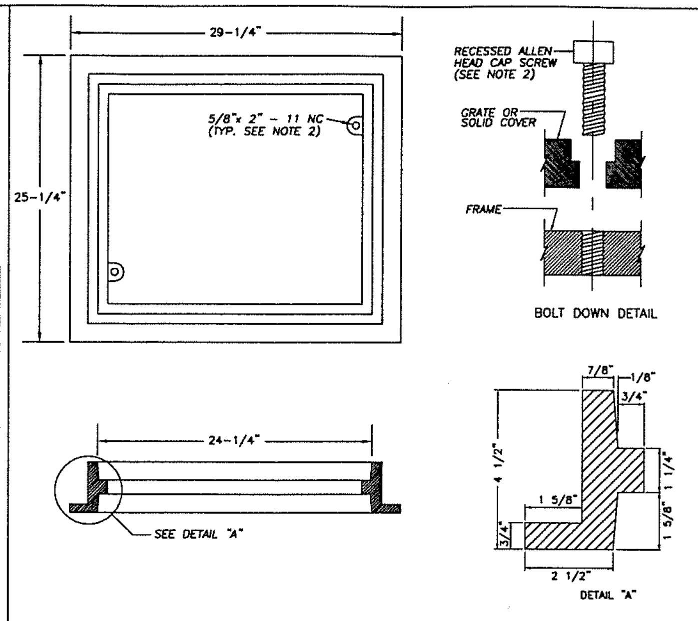

NOTES

1. THIS FRAME IS DESIGNED TO ACCOMODATE 20"x 24" GRATES OR COVERS AS SHOWN ON STD. PLANS D4.3 AND D4.4.
2. WHEN BOLT DOWN GRATES OR COVERS ARE SPECIFIED, PROVIDE TWO HOLES IN THE FRAME THAT ARE VERTICALLY ALIGNED WITH THE GRATE OR COVER SLOTS. TAP EACH HOLE TO ACCEPT A 5/8"x 2" - 11 NC ALLEN HEAD CAP SCREW. LOCATION OF BOLT DOWN HOLES VARIES AMONG DIFFERENT MANUFACTURERS.
3. REFER TO WSDOT STANDARD SPECIFICATION 9-05.15(2) FOR ADDITIONAL REQUIREMENTS.
4. SEE WSDOT STD. SPEC. SECTION 7.05.

DWG: D4-2.dwg

Department of Public Works — CLARK COUNTY WASHINGTON — proud past, promising future

REVERSIBLE FRAME FOR CATCH BASIN — APPROVED — COUNTY ENGINEER — 01/01/04 DATE — STANDARD D4.2 PLAN No.

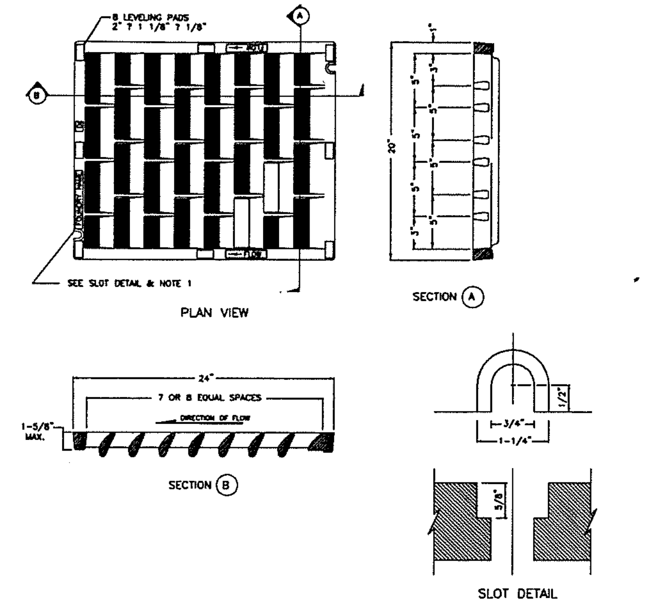

NOTES

1. WELDING NOT PERMITTED
2. USE HERRINGBONE GRATE PER STD. PLAN D4.3 WHERE LONGITUDINAL SLOPE IS LESS THAN 4%.
3. WHEN BOLT DOWN GRATES ARE SPECIFIED, PROVIDE TWO SLOTS IN THE GRATE THAT ARE VERTICALLY ALIGNED WITH THE HOLES IN THE FRAME. LOCATION OF BOLT DOWN SLOTS VARIES AMONG DIFFERENT MANUFACTURERS.
4. REFER TO WSDOT STANDARD SPECIFICATION 9-05.15(2) FOR ADDITIONAL REQUIREMENTS.
5. FOR FRAME DETAIL, SEE STD. PLAN D4.2

DWG: D4-4.dwg

Department of Public Works — CLARK COUNTY WASHINGTON — proud past, promising future

VANE GRATE FOR CATCH BASIN — APPROVED — COUNTY ENGINEER — 01/01/04 DATE — STANDARD D4.4 PLAN No.

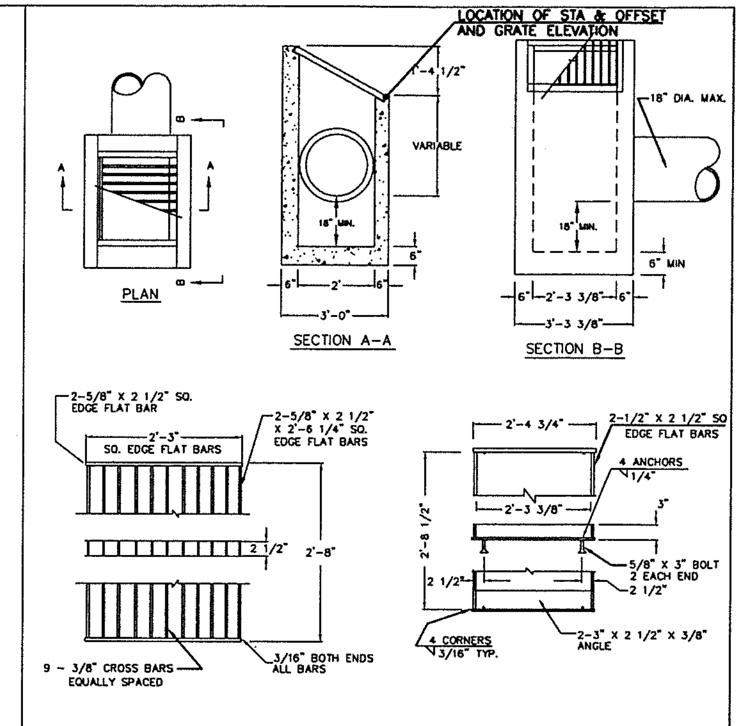

NOTES:

1. DITCH INLET CONSTRUCTION IN ACCORDANCE WITH ASTM C-478
2. CATCH BASIN, FRAME, AND GRATES SHALL BE FLAT BAR STEEL OR APPROVED EQUAL.
3. INSIDE FRAME DIMENSIONS: 2'-3 3/8"x 2'-8 1/2"".
4. 3/8" CROSS BARS SHALL BE FLUSH WITH THE GRATE SURFACE AND MAY BE FILLET WELDED, RESISTANCE WELDED OR ELECTROFORGED TO BEARING BARS.

DWG: D6.DWG

Department of Public Works — CLARK COUNTY WASHINGTON — proud past, promising future

DITCH INLET — APPROVED — COUNTY ENGINEER — 01/01/04 DATE — STANDARD D6 PLAN No.

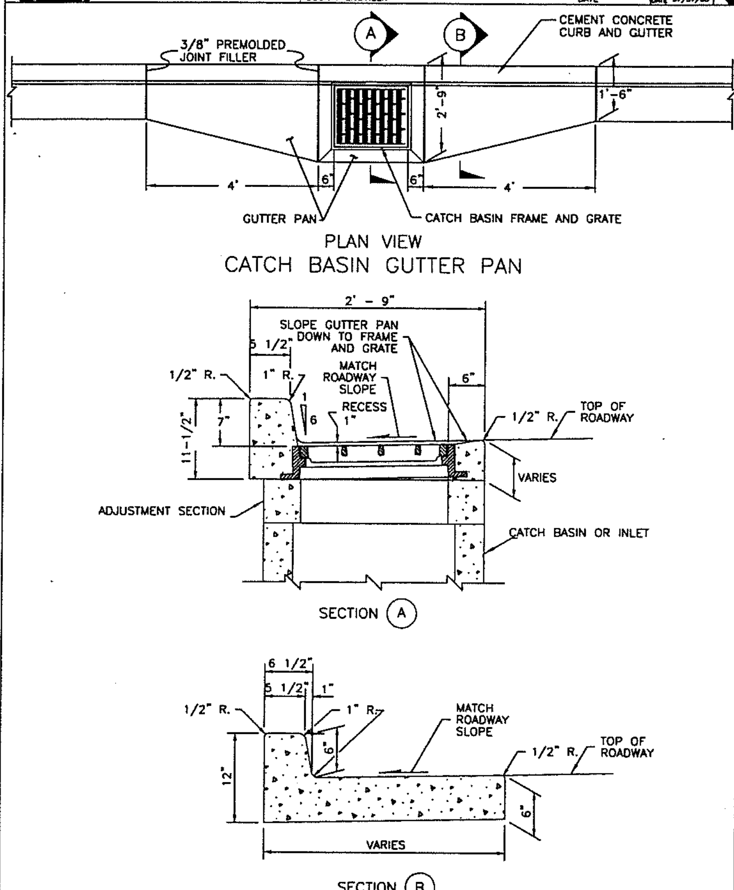

DWG: D4-1.DWG

Department of Public Works — CLARK COUNTY WASHINGTON — proud past, promising future

CATCH BASIN GUTTER PAN — APPROVED — COUNTY ENGINEER — 01/01/04 DATE — STANDARD D4.1 PLAN No.

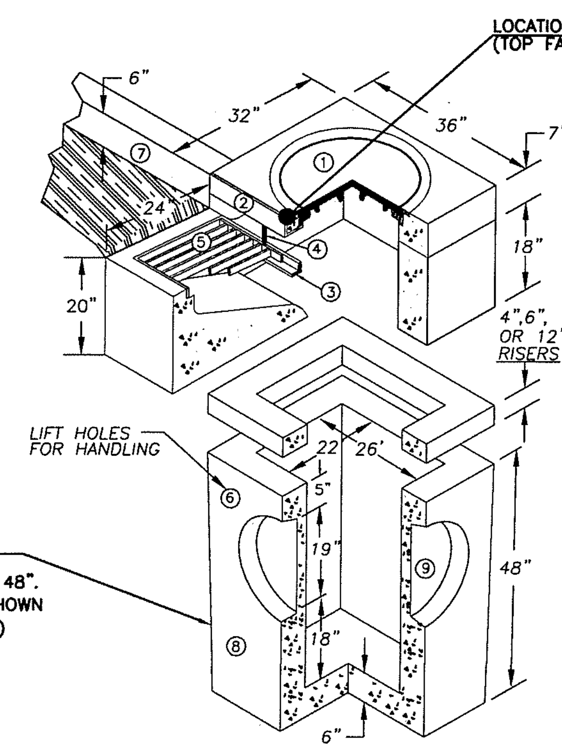

TYPE 1 BASE SHOWN (FOR TYPE 2 BASE, SEE STD. PLAN B-1e; DIA. = 48". ALIGN INLET FRAME AS SHOWN ON PLAN VIEW, THIS SHT.)

(#)

1 24"ALUMINUM LOCKING FRAME & COVER
2 2 1/2"x3 1/2"x1/4"x 35 7/8" GALVANIZED ANGLE IRON
3 2"x2 1/2"x1/4"x33" GALVANIZED ANGLE IRON
4 2 EA. #4 TRASH BARS @12" O.C.
5 24 3/4"x 28 1/2" GALVANIZED GRATE
6 2 EA. BASE UNIT LIFT HOLES
7 6" CURB AND 18" GUTTERS
8 STANDARD TYPE 1 BASE UNIT
9 PIPE KNOCKOUTS ALL FOUR SIDES.

WEIGHT:

TOP WEIGHT 420 LB.

RISER WITH GRATE WEIGHT 1920 LB.

BASE WEIGHT 2200 LB.

NOTES:

1 REINFORCING FOR INLET UNIT 3 EA. #4 HORIZONTAL BARS.
2 REINFORCING FOR TOP UNIT 2 EA. #3 HORIZONTAL BARS
3 REINFORCING FOR INLET SLOPED BASE, 4x4 MESH
4 GUTTER IS TAPERED DOWN TO GRATE INLET
5 ALL CONCRETE IS 4,000 PSI MIN.
6 ALL REBAR MEETS ASTM A615 GRADE 60.

ISOMETRIC VIEW

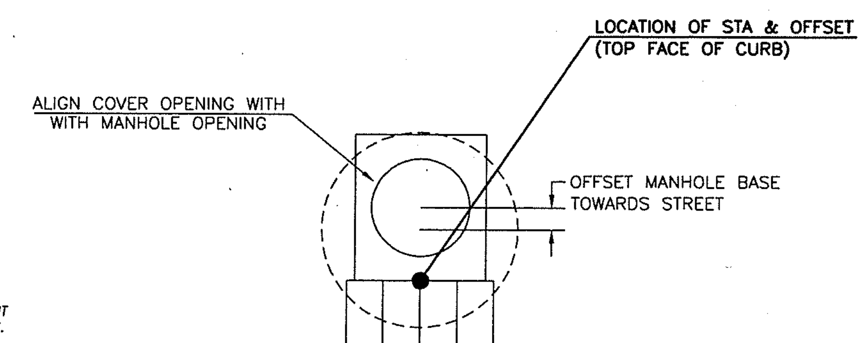

PLAN VIEW AND PLACEMENT DETAIL

PRELIMINARY

TYPE 2 COMBINATION CURB INLET

NTS

ENGINEERING PROGRAM
DESIGN SECTION

ST JOHNS ROAD (NE 50TH AVE TO NE 72ND AVE)
DRAINAGE DETAILS

CALL 48 HOURS BEFORE YOU DIG 1-800-553-4344 "It's the Law" NORTHWEST UTILITIES NOTIFICATION CENTER

DESIGNED	ME/JM
DRAWN	KB/RK
CRP	301422
HOR.	SEE SHEET
VERT.	SEE SHEET
DATE	07/31/05
DWG:	DD2
SHEET	30 OF 151

CLARK COUNTY WASHINGTON — proud past, promising future

n:\CIP\PROJECTS\301422-STJohns-50thTo72nd\DESIGN\DWGS\DD1-2.dwg, 7/27/2005 3:03:18 PM, kerlinr

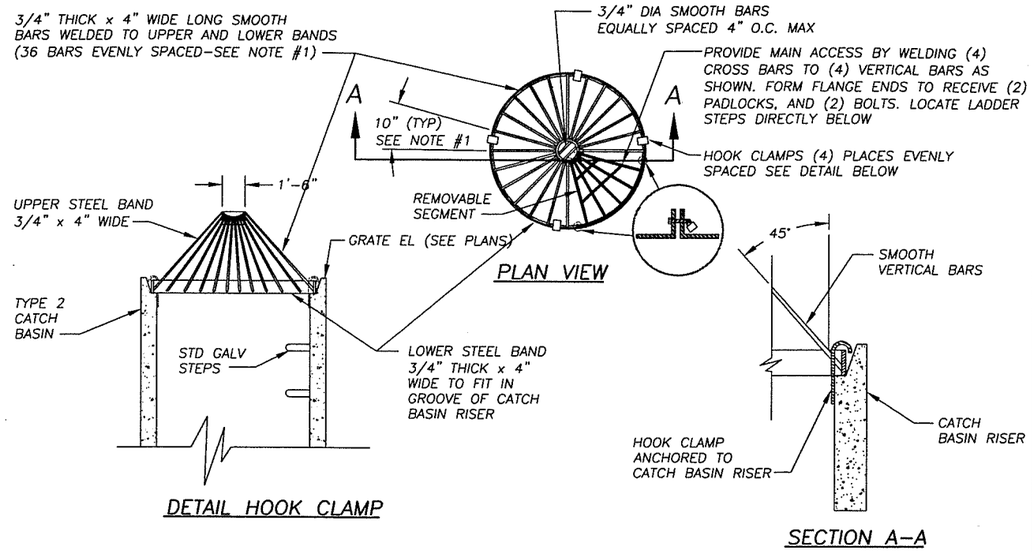

DROP INLET TRASH RACK

NTS

PRELIMINARY

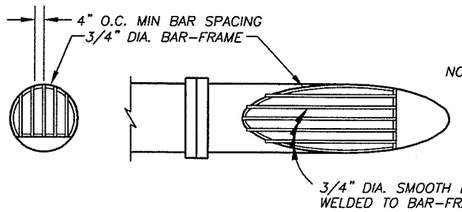

NOTE:
1. CMP* END-SECTION SHOWN;
2. ALL STEEL PARTS MUST BE GALVANIZED AND ASPHALT COATED (TREATMENT 1 OR BETTER).

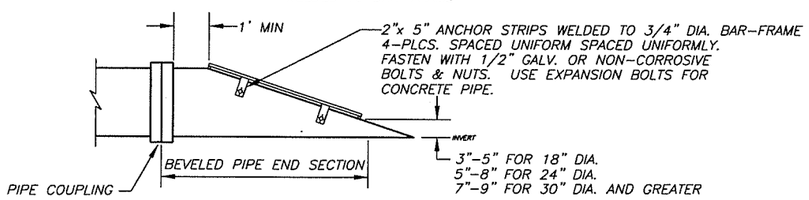

DEBRIS RACK

NTS

NOTE: FOR 12" DIP TRAP USE 12" ● 90 DEG. DIP ELBOW

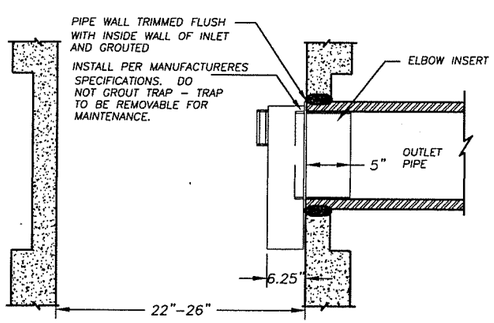

CATCH BASIN OUTLET PIPE TRAP

NTS

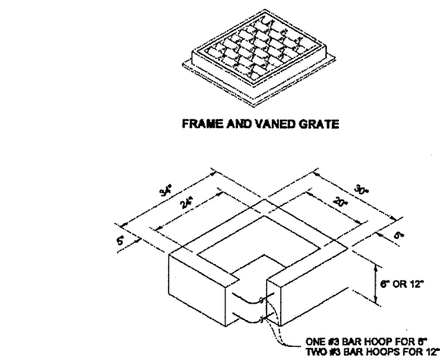

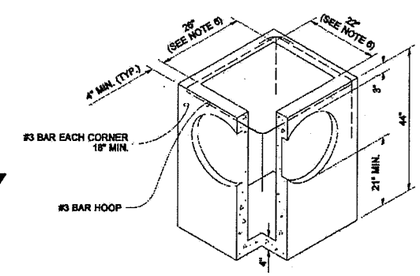

NOTES

1. AS AN ACCEPTABLE ALTERNATE TO REBAR, WIRE MESH HAVING A MINIMUM AREA OF 0.12 SQUARE INCHES PER FOOT MAY BE USED. WIRE MESH SHALL NOT BE PLACED IN KNOCKOUTS.
2. THE KNOCKOUT DIAMETER SHALL NOT BE GREATER THAN 20". KNOCKOUTS SHALL HAVE A WALL THICKNESS OF 2" MINIMUM TO 2.5" MAXIMUM. PROVIDE A 1.5" MIMMUM GAP BETWEEN THE KNOCKOUT WALL AND THE OUTSIDE OF THE PIPE. AFTER THE PIPE IS INSTALLED, FILL THE GAP WITH JOINT MORTAR IN ACCORDANCE WITH STANDARD SPECIFICATION 9-04.3.
3. THE MAXIMUM DEPTH FROM THE FINISHED GRADE TO THE PIPE INVERT SHALL BE 5'.
4. FRAME AND GRATE MAY BE INSTALLED WITH FLANGE DOWN OR CAST INTO ADJUSTMENT SECTION.
5. THE PRECAST BASE SECTION MAY HAVE A ROUNDED FLOOR AND THE WALLS MAY BE SLOPED AT A RATE OF 1:24 OR STEEPER.
6. OPENING SHALL BE MEASURED AT THE TOP OF THE PRECAST BASE SECTION.

PIPE ALLOWANCES	
PIPE MATERIAL	MAXIMUM INSIDE DIAMETER
REINFORCED OR PLAIN CONCRETE	12"
ALL METAL PIPE	16"
CPSSP * (STD. SPEC. 9-05.20)	12"
SOLID WALL PVC (STD. SPEC. 9-05.12(1))	15"
PROFILE WALL PVC (STD. SPEC. 9-05.12(2))	15"

* CORRUGATED POLYETHYLENE STORM SEWER PIPE

MATTHEW J. WITHROW — STATE OF WASHINGTON — 19348 — REGISTERED PROFESSIONAL ENGINEER — EXPIRES JULY 1, 2005

CATCH BASIN TYPE 1

STANDARD PLAN B-1

SHEET 1 OF 1 SHEET

APPROVED FOR PUBLICATION

Harold J. Peterfeso 07-21-03

STATE ENGINEER DATE

Washington State Department of Transportation

DRAWN BY: MARK SUSKA

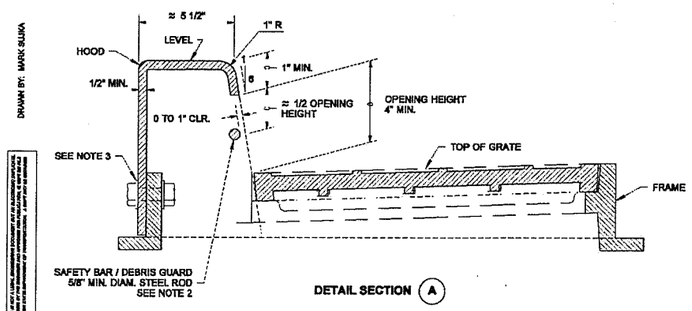

NOTES

1. THE ASYMMETRY OF THE COMBINATION INLET SHALL BE CONSIDERED WHEN CALCULATING THE OFFSET DISTANCE FOR THE CATCH BASIN. SEE SECTION "A".
2. THE DIMENSIONS OF THE FRAME AND HOOD MAY VARY SLIGHTLY AMONG DIFFERENT MANUFACTURERS. THE FRAME MAY HAVE CAST FEATURES INTENDED TO SUPPORT A GRATE GUARD. HOOD UNITS SHALL MOUNT OUTSIDE OF THE FRAME. THE METHODS FOR FASTENING THE SAFETY BAR / DEBRIS GUARD ROD TO THE HOOD MAY VARY. THE HOOD MAY INCLUDE CASTING LUGS. THE TOP OF THE HOOD MAY BE CAST WITH A PATTERN.
3. ATTACH THE HOOD TO THE FRAME WITH TWO 3/4" x 2" HEX HEAD BOLTS, NUTS, AND OVERSIZE WASHERS. THE WASHERS SHALL BE USED ON THE SLOTTED SIDE, AND SHALL HAVE DIAMETERS ADEQUATE TO ASSURE FULL BEARING ACROSS THE SLOTS.
4. WHEN BOLT DOWN GRATES ARE SPECIFIED IN THE CONTRACT, PROVIDE TWO HOLES IN THE FRAME THAT ARE VERTICALLY ALIGNED WITH THE GRATE SLOTS. TAP EACH HOLE TO ACCEPT A 5/8" x - 11 NC x 2" ALLEN HEAD CAP SCREW. LOCATION OF BOLT DOWN HOLES VARIES AMONG DIFFERENT MANUFACTURERS. SEE "BOLT DOWN DETAIL", STANDARD PLAN B-2a.
5. ONLY DUCTILE IRON VANED GRATES SHALL BE USED. SEE STANDARD PLANS B-2b AND B-2c FOR GRATE DETAILS. REFER TO STANDARD SPECIFICATION 9-05.15(2) FOR ADDITIONAL REQUIREMENTS.
6. THIS PLAN IS INTENDED TO SHOW THE INSTALLATION DETAILS OF A MANUFACTURED PRODUCT. IT IS NOT THE INTENT OF THIS PLAN TO SHOW THE SPECIFIC DETAILS NECESSARY TO FABRICATE THE CASTINGS SHOWN ON THIS DRAWING.

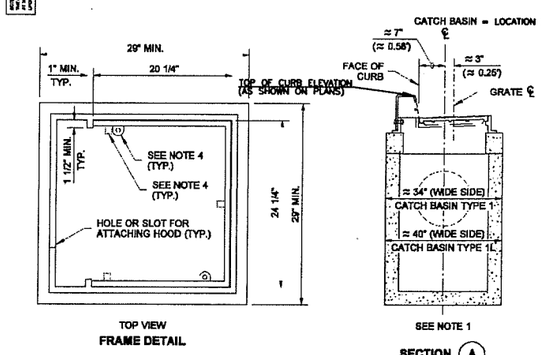

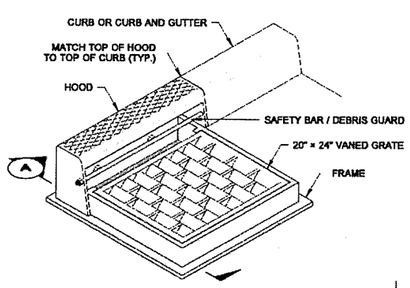

MATTHEW J. WITHROW — STATE OF WASHINGTON — 19348 — REGISTERED PROFESSIONAL ENGINEER — EXPIRES JULY 1, 2005

COMBINATION INLET

(WDOT STANDARD)

STANDARD PLAN B-2a

SHEET 1 OF 1 SHEET

APPROVED FOR PUBLICATION

Harold J. Peterfeso 02-25-04

STATE ENGINEER DATE

Washington State Department of Transportation

DESIGNED	ME/JM
DRAWN	KB/RK
CRP	301422
HOR.	SEE SHEET
VERT.	SEE SHEET
DATE	07/31/05
DWG:	DD3
SHEET	31 OF 151

CALL 48 HOURS BEFORE YOU DIG 1-800-553-4344 "It's the Law" NORTHWEST UTILITIES NOTIFICATION CENTER

JOHN MILNE — STATE OF WASHINGTON — 31148 — REGISTERED PROFESSIONAL ENGINEER — EXPIRES JULY 7, 2007

ENGINEERING PROGRAM
DESIGN SECTION

ST JOHNS ROAD (NE 50TH AVE TO NE 72ND AVE)
DRAINAGE DETAILS

proud past, promising future

CLARK COUNTY WASHINGTON

n:\CIP\PROJECTS\301422-STJohns-50thTo72nd\DESIGN\DWGS\DD3.dwg, 7/27/2005 3:03:55 PM, kerlinr

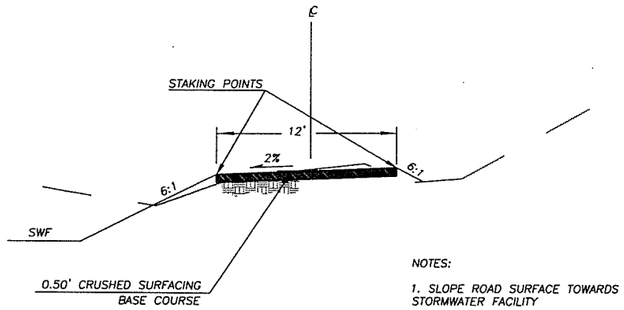

NOTES:

1. SLOPE ROAD SURFACE TOWARDS STORMWATER FACILITY
2. TYPICAL SLOPES SHOWN; SEE GRADING AND STAKING PLANS FOR DETAILED INFORMATION

TYPICAL MAINTENANCE ROAD SECTION

N.T.S.

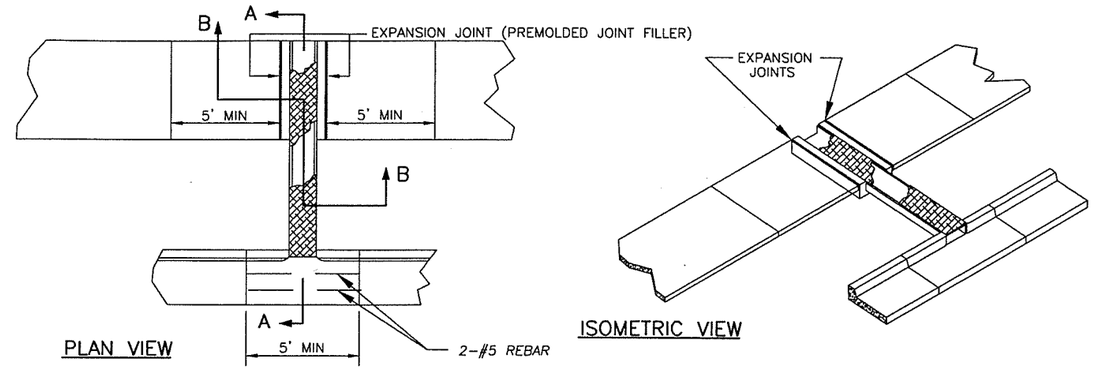

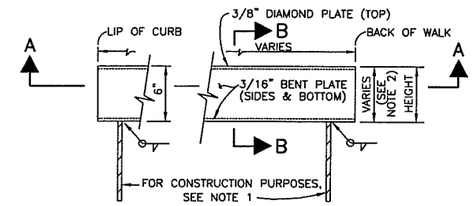

SIDEWALK CHASE ELEVATION

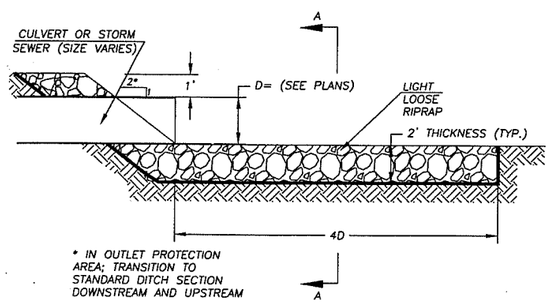

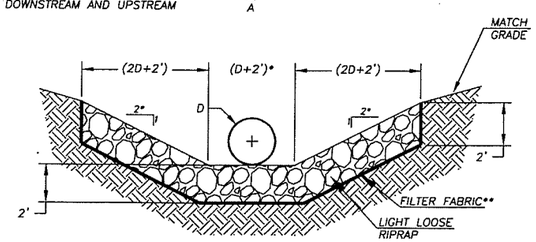

SECTION A-A

** CONSTRUCTION GEOTEXTILE FOR SEPARATION OR SOIL STABILIZATION (WSDOT 9-33, TABLE 3)

OUTFALL DISCHARGE PROTECTION

N.T.S.

SECTION A-A

FLOW TO GUTTER

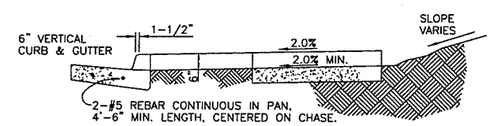

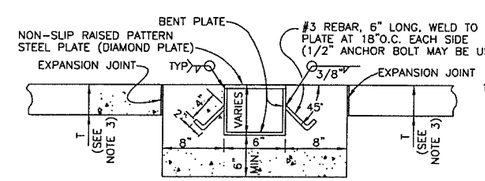

SECTION B-B

NOTES

1. 18"-#4 REBAR: WELD ONE BAR NEAR EACH END OF TUBE; SUPPLY AT LEAST TWO BARS PER TUBE, MORE IF CONTRACTOR DEEMS APPROPRIATE. REBAR IS USED TO SUPPORT AND ALIGN TUBE UNTIL CONCRETE IS PLACED.
2. HEIGHT OF SIDEWALK CHASE SHALL MATCH CURB HEIGHT, I.E., HEIGHT FROM FLOWLINE TO TOP OF CURB.
3. T = THICKNESS OF WALK.
4. ALL STEEL SHALL BE GALVANIZED

SIDEWALK CHASE

PRELIMINARY

DESIGNED	ME/JM
DRAWN	KB/RK
CRP	301422
HOR.	SEE SHEET
VERT.	SEE SHEET
DATE	07/31/05
DWG:	DD4
SHEET	32 OF 151

CALL 48 HOURS BEFORE YOU DIG 1-800-553-4344 "It's the Law" NORTHWEST UTILITIES NOTIFICATION CENTER

JOHN M. SIMS, STATE OF WASHINGTON, 21148, REGISTERED PROFESSIONAL ENGINEER — EXPIRES: JULY 7, 2007

ENGINEERING PROGRAM
DESIGN SECTION

ST JOHNS ROAD (NE 50TH AVE TO NE 72ND AVE)
DRAINAGE DETAILS

proud past, promising future

CLARK COUNTY WASHINGTON

n:\CIP\PROJECTS\301422-STJohns-50thTo72nd\DESIGN\DWGS\DD4.dwg, 7/27/2005 3:04:26 PM, kerlinr

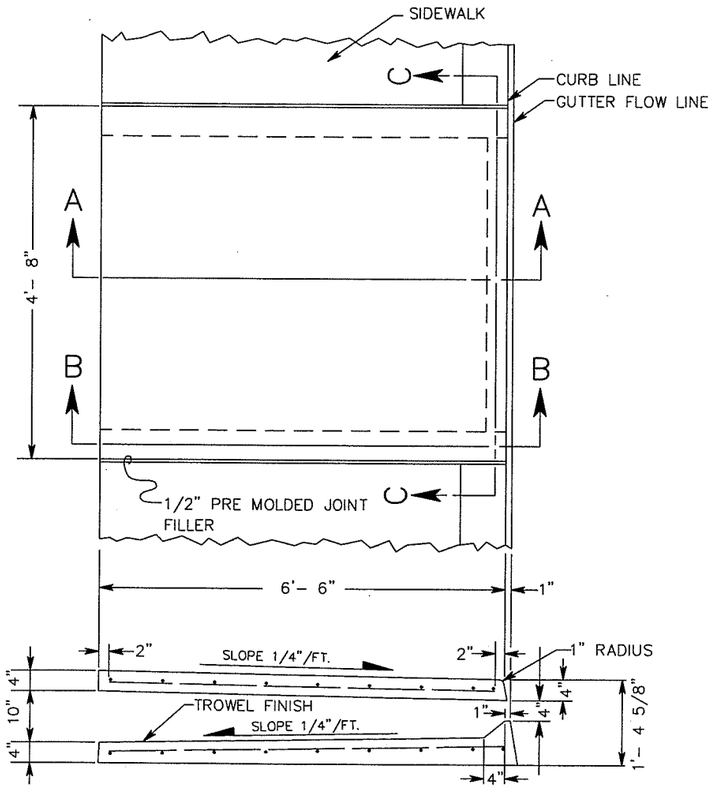

SECTION A-A

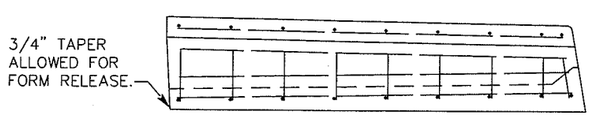

SECTION B-B
REBAR PLACEMENT

SPECIAL CURB INLET

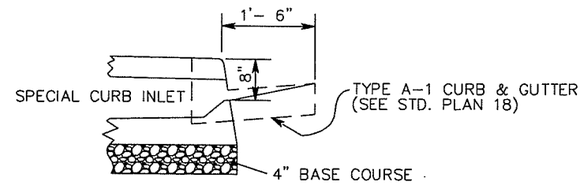

GENERAL NOTES

1. CURB INLET SHALL BE CONSTRUCTED IN ACCORDANCE WITH ASTM C 478 (AASHTO M 199) & ASTM C 890 UNLESS OTHERWISE SHOWN ON PLANS OR NOTED IN THE PROJECT SPECIAL PROVISIONS.
2. TOP SURFACE TO BE BROOM FINISHED.
3. ALL EXTERNAL EDGES NOT LABELED SHALL BE TROWELLED WITH 1/4" RADIUS EDGER.

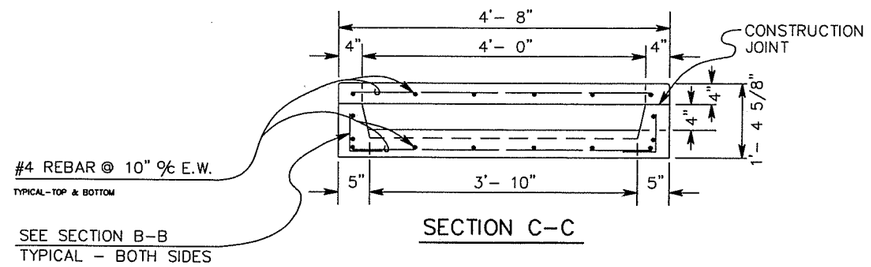

SECTION C-C

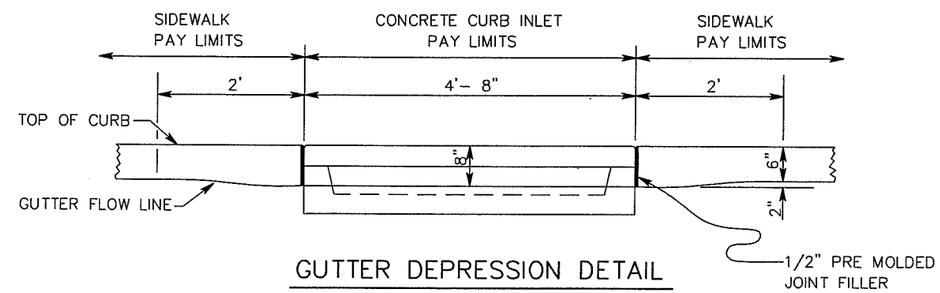

GUTTER DEPRESSION DETAIL

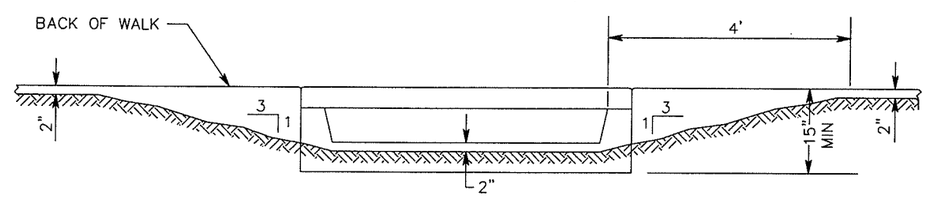

OUTLET SWALE GRADING DETAIL

SPECIAL CURB INLET AND OUTLET BEHIND WALK TO SWALE

PRELIMINARY

DESIGNED ME/JM
DRAWN KB/RK
CRP 301422
HOR. SEE SHEET
VERT. SEE SHEET
DATE 07/31/05
DWG: DD5
SHEET 33 OF 151

CALL 48 HOURS BEFORE YOU DIG
1-800-553-4344
"It's the Law"
NORTHWEST UTILITIES NOTIFICATION CENTER

STATE OF WASHINGTON
JOHN MILLER
REGISTERED PROFESSIONAL ENGINEER
EXPIRES: JULY 2, 2007

ENGINEERING PROGRAM
DESIGN SECTION

ST JOHNS ROAD (NE 50TH AVE TO NE 72ND AVE)
DRAINAGE DETAILS

proud past, promising future
CLARK COUNTY
WASHINGTON

n:\CIP\PROJECTS\301422-STJohns-50thTo72nd\DESIGN\DWGS\DD5.dwg, 7/27/2005 3:04:41 PM, kerlinr

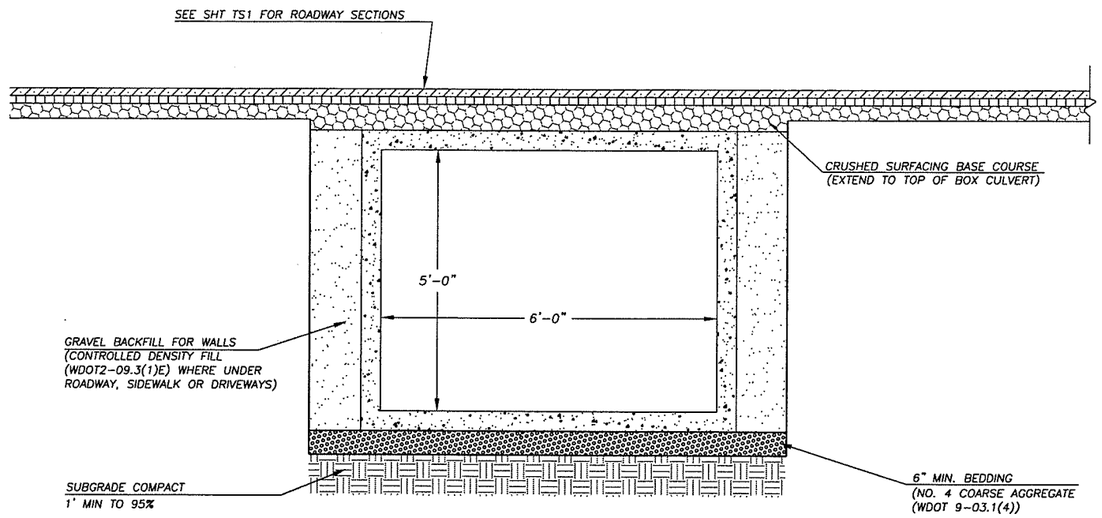

NOTES:

1. CONTRACTOR SHALL FURNISH ALL SOILS INFORMATION NECESSARY, COMPLETE STRUCTURAL DESIGN AND SUBMIT DETAILED SHOP DRAWINGS FOR ENGINEER'S REVIEW AND APPROVAL. BOTH PRE-CAST AND CAST-IN-PLACE DESIGNS ARE ACCEPTABLE, SUBJECT TO REVIEW AND APPROVAL.
2. ALL REINFORCED CONCRETE DESIGN SHALL BE TO WSDOT DESIGN MANUAL M 22-01. DESIGN SHALL BE H20 LOADING TO ASTM850 (CHECK WITH STRUCTURAL)
3. APPROXIMATE DEPTHS OF COVER OVER THE CENTERLINE OF THE BOX CULVERT ARE SHOWN ON THE PLAN PROFILES. THE CONTRACTOR SHALL COMPUTE MINIMUM DEPTHS OF COVER FOR DESIGN PURPOSES USING THE DETAILED GEOMETRIC INFORMATION PROVIDED ON THE ROADWAY PROFILE SHEETS AND THE TYPICAL SECTIONS.
4. PAYMENT SHALL BE BY LINEAL FOOT OF BOX CULVERT INSTALLED. ALL INVESTIGATION, DESIGN, CONCRETE, REINFORCING, BEDDING, BACKFILL, MANHOLES, BLOCKOUTS, BULKHEADS AND ALL OTHER ITEMS ARE INCIDENTAL TO THIS UNIT PRICE.

REINFORCED CONCRETE BOX CULVERT (DESIGN-BUILD)

N.T.S.

PRELIMINARY

DESIGNED ME/JM
DRAWN KB/RK
CRP 301422
HOR. SEE SHEET
VERT. SEE SHEET
DATE 07/31/05
DWG: D06
SHEET 34 OF 151

CALL 48 HOURS BEFORE YOU DIG
1-800-553-4344
"It's the Law"
NORTHWEST UTILITIES NOTIFICATION CENTER

STATE OF WASHINGTON
MILLARD SEBENIUS
REGISTERED PROFESSIONAL ENGINEER
EXPIRES: JULY 2, 2007

ENGINEERING PROGRAM
DESIGN SECTION

ST JOHNS ROAD (NE 50TH AVE TO NE 72ND AVE)
DRAINAGE DETAILS

proud past. promising future
CLARK COUNTY
WASHINGTON

n:\CIP\PROJECTS\301422-STJohns-50thTo72nd\DESIGN\DWGS\DD6.dwg, 7/27/2005 3:04:57 PM, kerlinr

REINFORCED CONCRETE COMPOUND WEIR STRUCTURE

N.T.S.

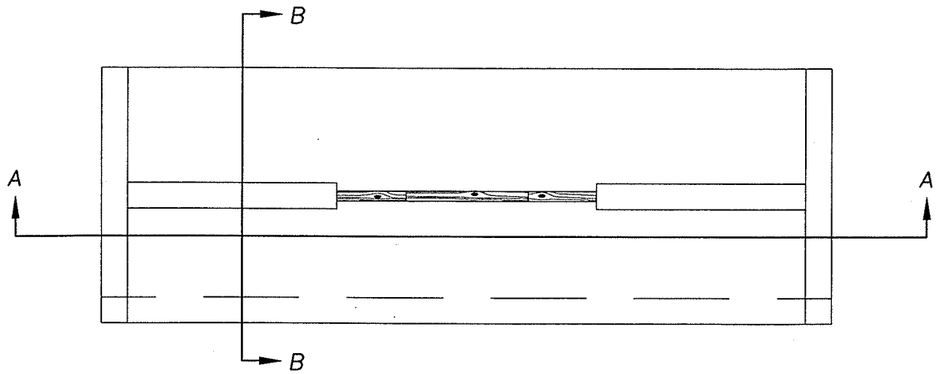

PLAN
NTS

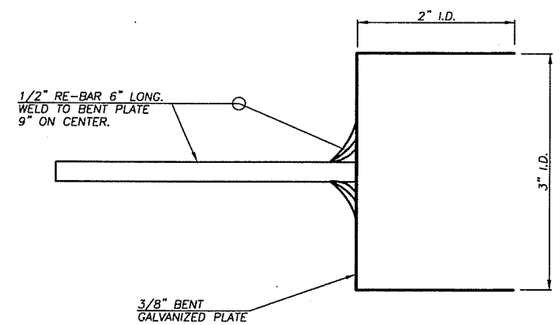

STOPLOG GUIDE
NTS

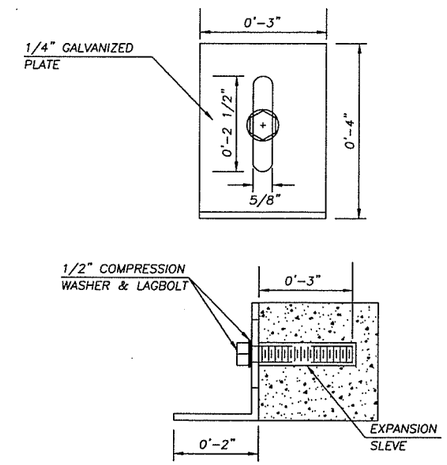

STOPLOG LOCK
NTS

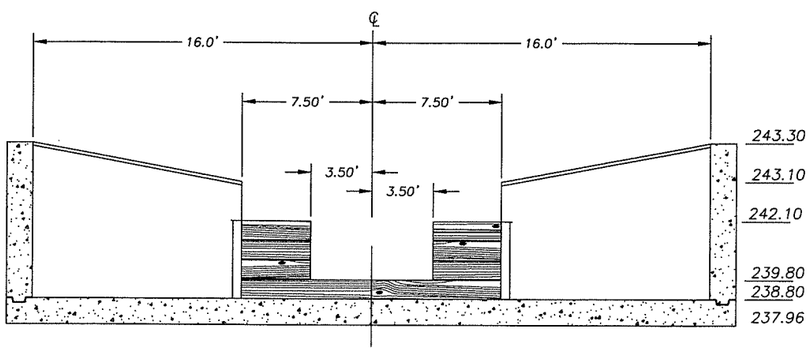

SECTION A-A
NTS

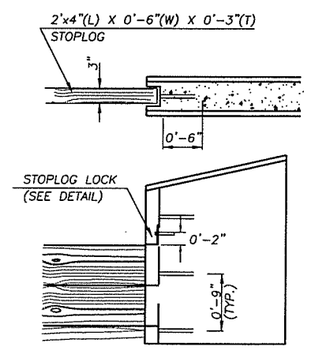

STOPLOG GUIDE
NTS

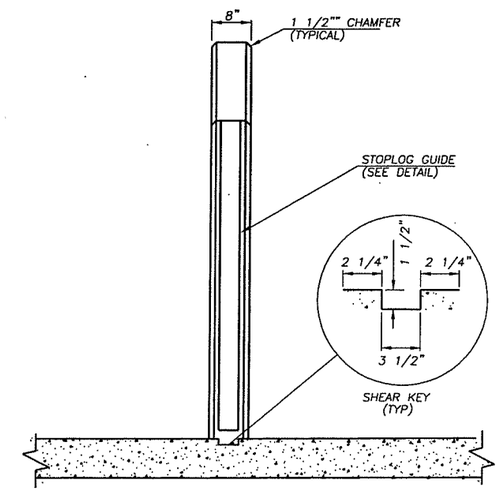

SECTION
NTS

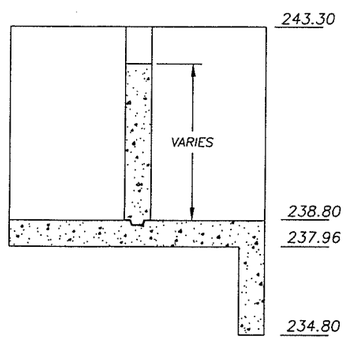

SECTION B-B
NTS

PRELIMINARY

CONSTRUCTION NOTES:

1. STRUCTURAL STEEL NOT SHOWN (SEE DWG). DD8
2. CONTRACTOR SHALL SUBMIT DETAILED SHOP DRAWINGS FOR ENGINEER'S REVIEW AND APPROVAL.
3. PROVIDE SHEAR KEY DURING STAGED CONSTRUCTION TO PROVIDE LATERAL SUPPORT FOR WALLS
4. WOOD STOPLOG SHOULD BE CEDAR AND FREE OF KNOTS

DESIGNED	ME/JM
DRAWN	KB/RK
CRP	301422
HOR.	SEE SHEET
VERT.	SEE SHEET
DATE	07/31/05
DWG:	DD7
SHEET	35 OF 151

CALL 48 HOURS BEFORE YOU DIG
1-800-553-4344
"It's the Law"
NORTHWEST UTILITIES NOTIFICATION CENTER

STATE OF WASHINGTON
MICHAEL WILLIAM KOSTANICH
31148
REGISTERED PROFESSIONAL ENGINEER
EXPIRES: MAY 8, 2007

ENGINEERING PROGRAM
DESIGN SECTION

ST JOHNS ROAD (NE 50TH AVE TO NE 72ND AVE)
DRAINAGE DETAILS

proud past, promising future
CLARK COUNTY
WASHINGTON

n:\CIP\PROJECTS\301422-STJohns-50thTo72nd\DESIGN\DWGS\DD7.dwg, 7/27/2005 3:05:14 PM, kerlinr

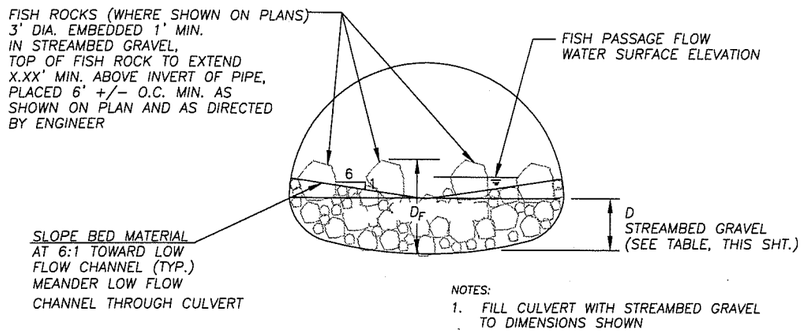

NOTES:
1. FILL CULVERT WITH STREAMBED GRAVEL TO DIMENSIONS SHOWN

CULVERT CROSS SECTION

N.T.S.

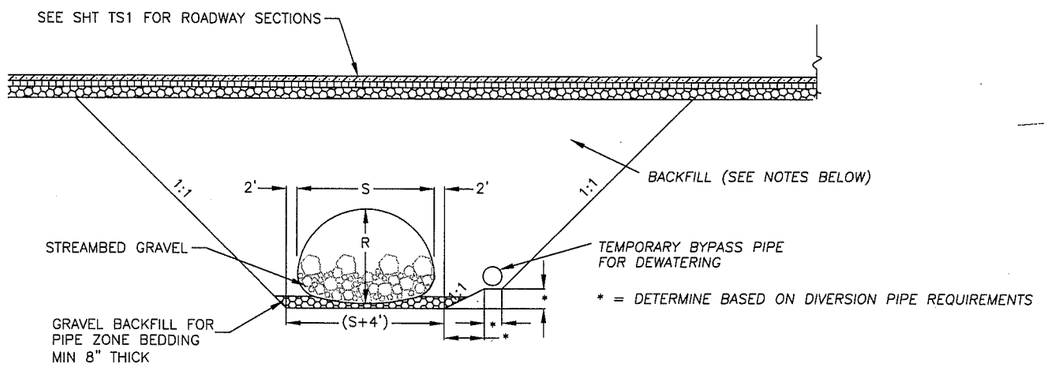

CULVERT TRENCH DETAIL

N.T.S.

NOTES:
1. FOR STRUCTURAL PLATE PIPE ARCH, BACKFILL TO BE IMPORTED, CLEAN, WELL- GRADED GRANULAR MATERIAL (AASHTO M 145 FOR SOIL CLASSIFICATION A-1, A-2 OR A-3)
2. PIPE INSTALLATION PER MANUFACTURER'S SPECIFICATIONS. CONTACT PIPE MANUFACTURER TO PROVIDE ON-SITE ASSISTANCE PRIOR TO ASSEMBLY.
3. BACKFILL SHALL BE PLACED SYMMETRICALLY ON EACH SIDE OF THE STRUCTURE IN 6" TO 8" LIFTS.
4. PLACEMENT, BACKFILL AND COMPACTION TO BE AS DIRECTED BY ENGINEER.
5. ALL PAVING INCLUDED IN PAVEMENT BID ITEMS
6. ALL BEDDING, BACKFILL AND INSTALLATION INCLUDED IN BID ITEM FOR PIPE. FILL INSIDE PIPE PAID UNDER SEPARATE BID ITEMS.

CULVERT LOCATION	STRUCTURE TYPE	S	R	D	D_F
LALONDE CREEK	BOX CULVERT	6'-0"	5'-0"	1.5'	N.A.

CULVERT DIMENSIONS

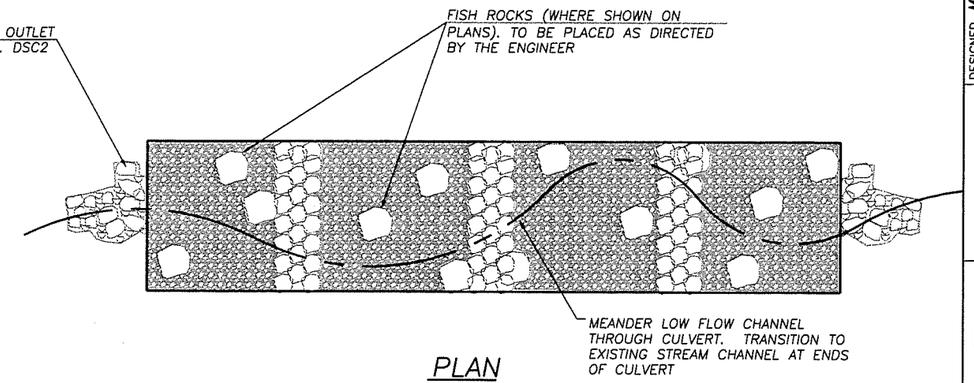

PLAN

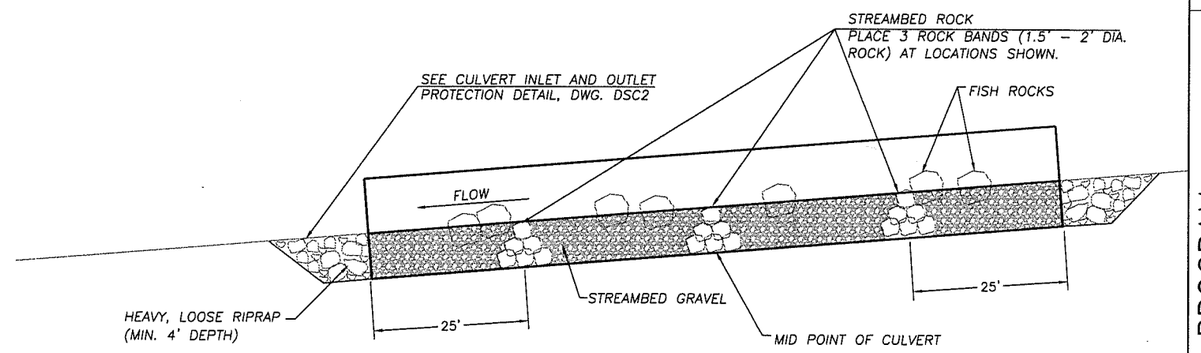

PROFILE

TYPICAL CULVERT LAYOUT

N.T.S.

LALONDE CREEK	
Diameter (in)	Percent Finer
10	100
5	85-95
2	65-75
1/4	30-40
0.03	10-15

1. STREAMBED GRAVEL TO BE WELL-GRADED GRAVEL PIT MATERIAL. QUARRIED, ANGULAR MATERIAL IS NOT ACCEPTABLE.
2. STREAMBED GRAVEL TO BE TESTED AND GRADATION CONFIRMED AT GRAVEL PIT PRIOR TO DELIVERY TO SITE.

GRADATION FOR STREAMBED GRAVEL

PRELIMINARY

DESIGNED ME/JM
DRAWN KB/RK
CRP 301422
HOR. SEE SHEET
VERT. SEE SHEET
DATE 07/31/05
DWG: DSC1
SHEET 36 OF 151

CALL 48 HOURS BEFORE YOU DIG 1-800-553-4344 "It's the Law" NORTHWEST UTILITIES NOTIFICATION CENTER

MILNE, JOHN DAVID STATE OF WASHINGTON REGISTERED PROFESSIONAL ENGINEER
EXPIRES JULY 2, 2007

ENGINEERING PROGRAM
DESIGN SECTION

ST JOHNS ROAD (NE 50TH AVE TO NE 72ND AVE)
STREAM CROSSING DETAILS I

proud past, promising future
CLARK COUNTY WASHINGTON

N:\CIP\PROJECTS\301422-STJohns-50thTo72nd\DESIGN\DWGS\DSC1.dwg, 8/17/2005 7:46:55 AM, milnej

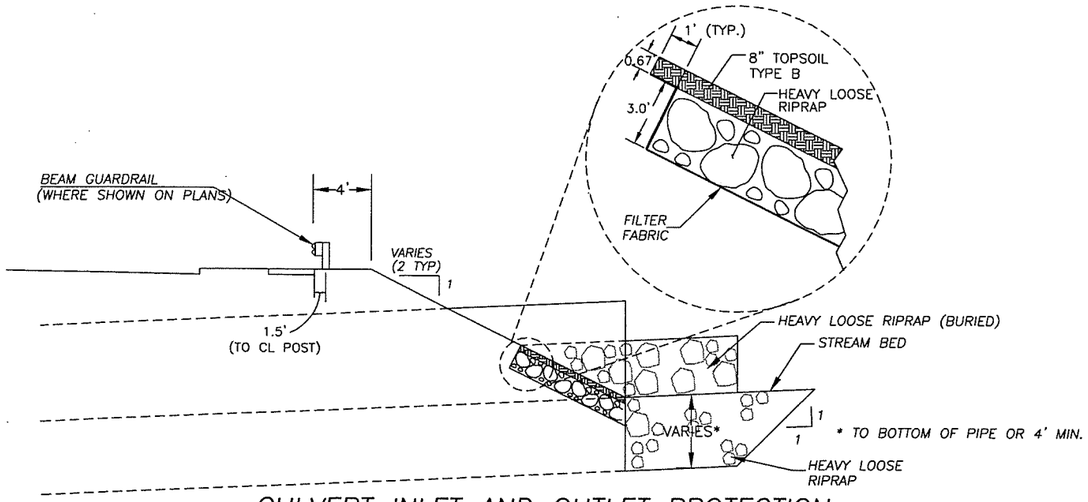

CULVERT INLET AND OUTLET PROTECTION

N.T.S.

NOTES:
1. SEE PLAN AND PROFILE SHEETS FOR DETAILED LAYOUT AND ELEVATION INFORMATION.
2. FILTER FABRIC SHALL BE CONSTRUCTION GEOTEXTILE FOR SEPARATION OR SOIL STABILIZATION TO WDOT 9-33 (TABLE-3). INSTALL LINER PER MANUFACTURER'S SPECIFICATIONS.
3. ALL COSTS FOR 8" TOPSOIL TYPE B INCLUDED IN UNIT COST FOR HEAVY LOOSE RIPRAP (BURIED).
4. FOR BEAM GUARDRAIL, SEE WSDOT STD. PLAN C-1.
5. WHERE DRIVEN BEAM MAY IMPACT CULVERT, PROVIDE 12'-6" SPAN PLACEMENT PER WDOT STD PLAN C-2K.

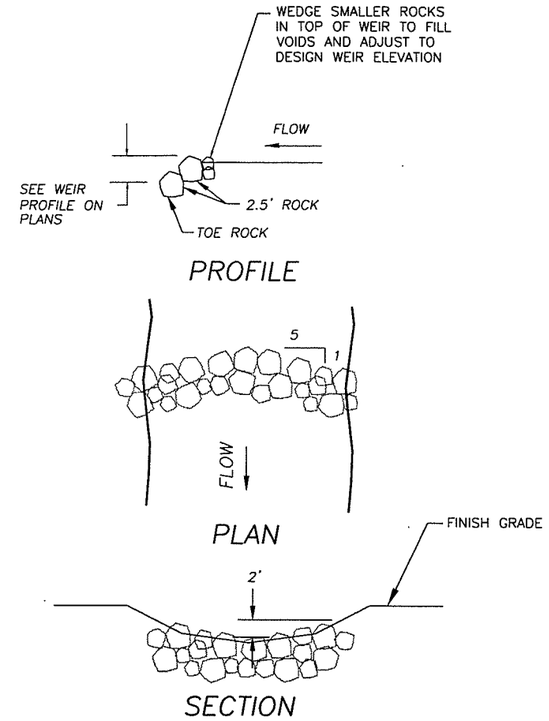

ROCK WEIR DETAIL

N.T.S.

PRELIMINARY

DESIGNED	ME/JM
DRAWN	KB/RK
CRP	301422
HOR.	SEE SHEET
VERT.	SEE SHEET
DATE	07/31/05
DWG:	DSC2
SHEET	37 OF 151

CALL 48 HOURS BEFORE YOU DIG 1-800-553-4344 "It's the Law" NORTHWEST UTILITIES NOTIFICATION CENTER

STATE OF WASHINGTON MILLINE DAVID ROBERT 21148 REGISTERED PROFESSIONAL ENGINEER EXPIRES:AUGUST 7, 2007

ENGINEERING PROGRAM
DESIGN SECTION

ST JOHNS ROAD (NE 50TH AVE TO NE 72ND AVE)
STREAM CROSSING DETAILS II

proud past, promising future
CLARK COUNTY WASHINGTON

n:\CIP\PROJECTS\301422-STJohns-50thTo72nd\DESIGN\DWGS\DSC2.dwg, 7/27/2005 3:05:45 PM, kerlinr

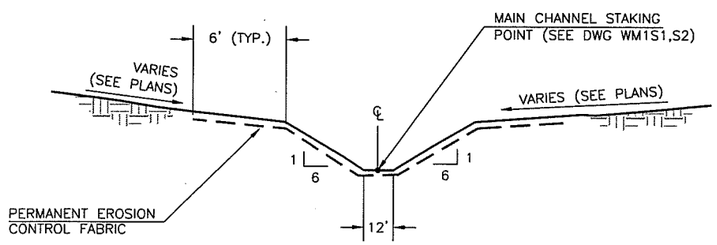

SECTION 1: MAIN CHANNEL

WETLAND MITIGATION AREA #1

N.T.S.

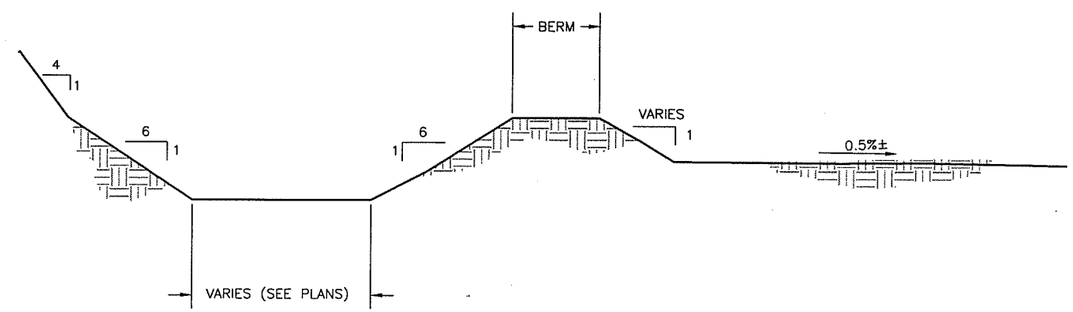

POND

N.T.S.

PRELIMINARY

n:\CIP\PROJECTS\301422-STJohns-50thTo72nd\DESIGN\DWGS\DWM1.dwg, 7/27/2005 3:06:01 PM, kerlinr

DESIGNED	ME/JM
DRAWN	KB/RK
CRP	301422
HOR.	SEE SHEET
VERT.	SEE SHEET
DATE	07/31/05
DWG:	DWM1
SHEET	38 OF 151

CALL 48 HOURS BEFORE YOU DIG

1-800-553-4344

"It's the Law"

NORTHWEST UTILITIES NOTIFICATION CENTER

STATE OF WASHINGTON 31148 REGISTERED PROFESSIONAL ENGINEER

EXPIRES JULY 7, 2007

ENGINEERING PROGRAM
DESIGN SECTION

ST JOHNS ROAD (NE 50TH AVE TO NE 72ND AVE)
WETLAND MTITGATION AREAS; TYPICAL SECTIONS

proud past, promising future

CLARK COUNTY WASHINGTON

PRELIMINARY

WALL NO. 1

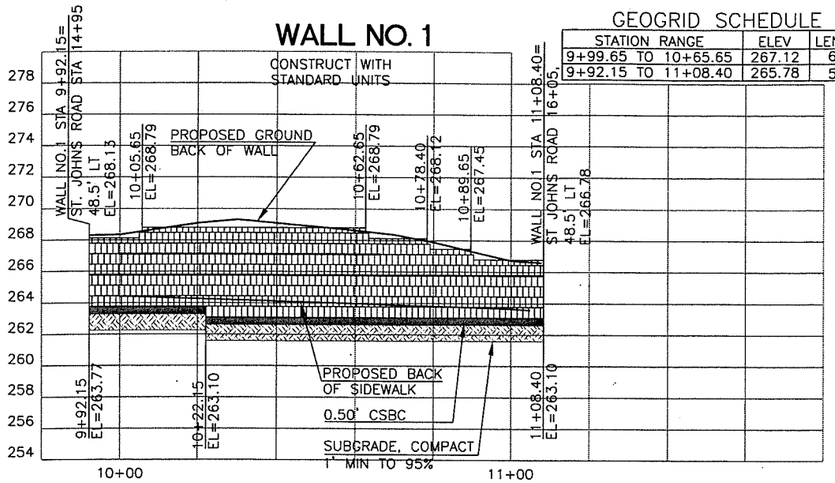

GEOGRID SCHEDULE

STATION RANGE	ELEV	LENGTH
9+99.65 TO 10+65.65	267.12	6.0'
9+92.15 TO 11+08.40	265.78	5.5'

WALL NO. 2

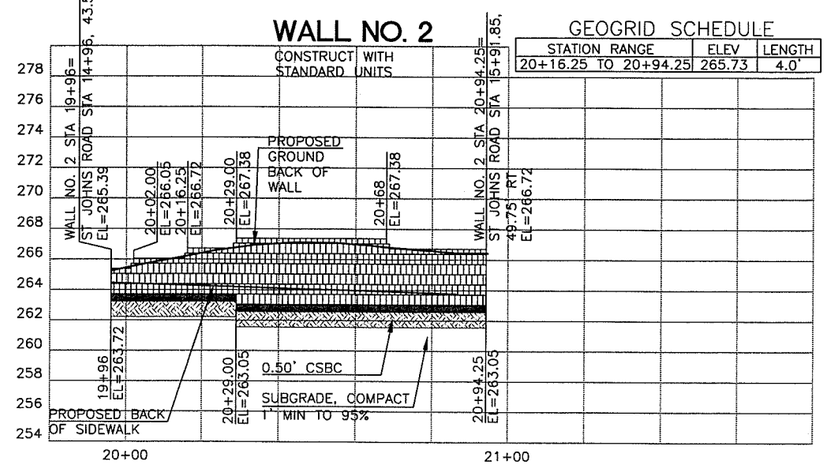

GEOGRID SCHEDULE

STATION RANGE	ELEV	LENGTH
20+16.25 TO 20+94.25	265.73	4.0'

WALL NO. 3

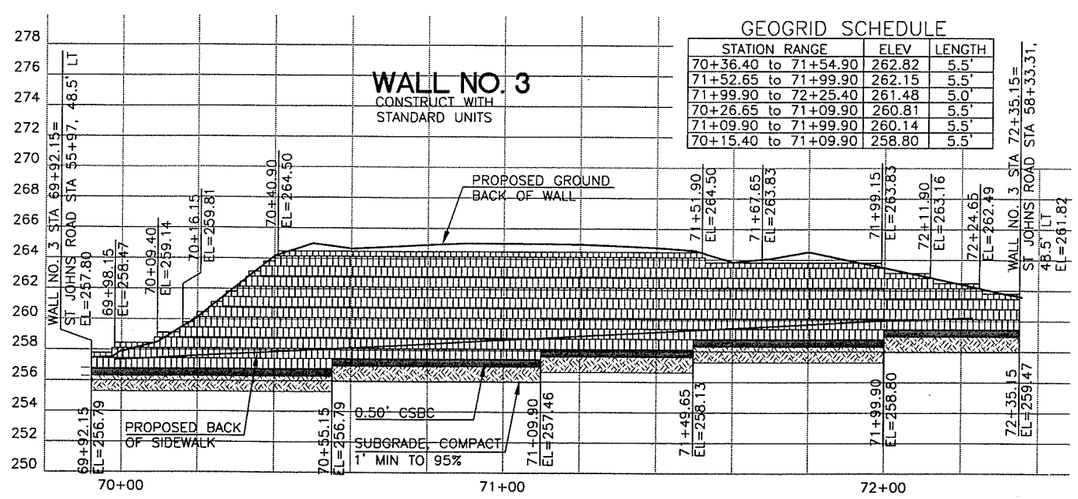

GEOGRID SCHEDULE

STATION RANGE	ELEV	LENGTH
70+36.40 to 71+54.90	262.82	5.5'
71+52.65 to 71+99.90	262.15	5.5'
71+99.90 to 72+25.40	261.48	5.0'
70+26.65 to 71+09.90	260.81	5.5'
71+09.90 to 71+99.90	260.14	5.5'
70+15.40 to 71+09.90	258.80	5.5'

WALL NO. 4

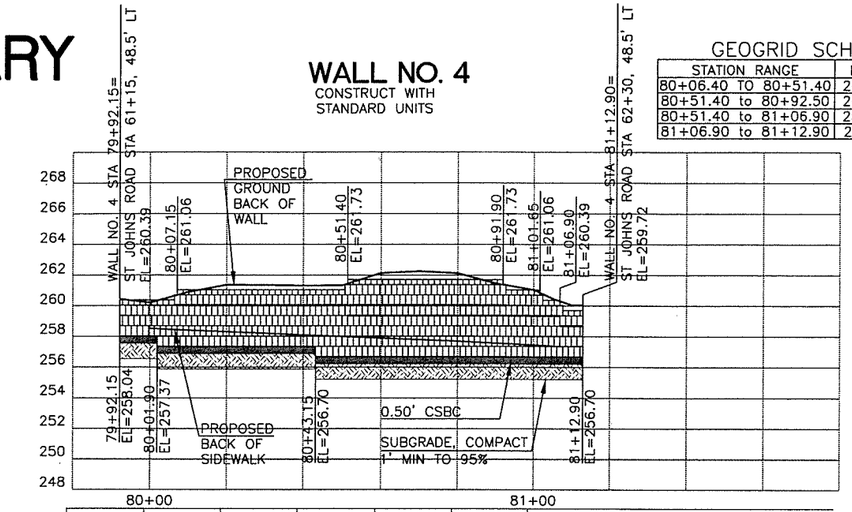

GEOGRID SCHEDULE

STATION RANGE	ELEV	LENGTH
80+06.40 TO 80+51.40	260.05	4.5'
80+51.40 to 80+92.50	260.05	5.5'
80+51.40 to 81+06.90	259.38	5.5'
81+06.90 to 81+12.90	258.71	4.0'

WALL NO. 5

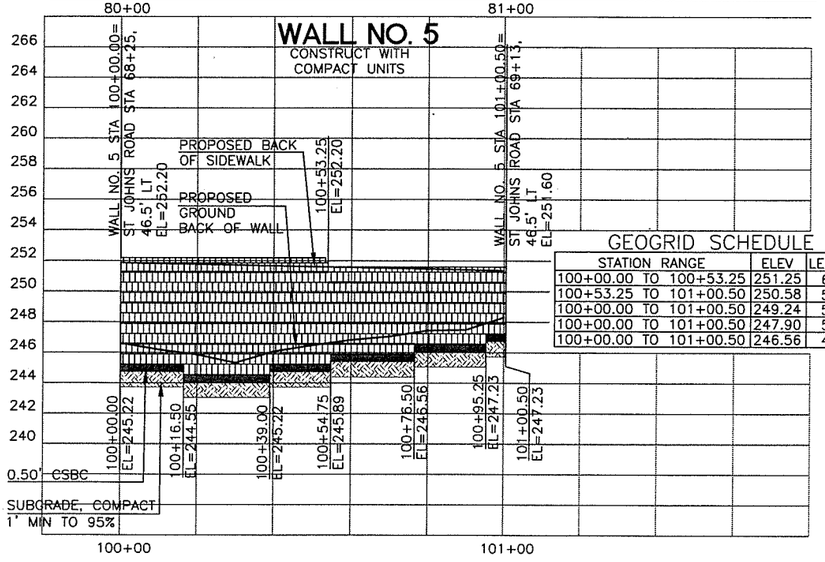

GEOGRID SCHEDULE

STATION RANGE	ELEV	LENGTH
100+00.00 TO 100+53.25	251.25	6.5'
100+53.25 TO 101+00.50	250.58	5.0'
100+00.00 TO 101+00.50	249.24	5.0'
100+00.00 TO 101+00.50	247.90	5.0'
100+00.00 TO 101+00.50	246.56	4.0'

WALL NO. 6

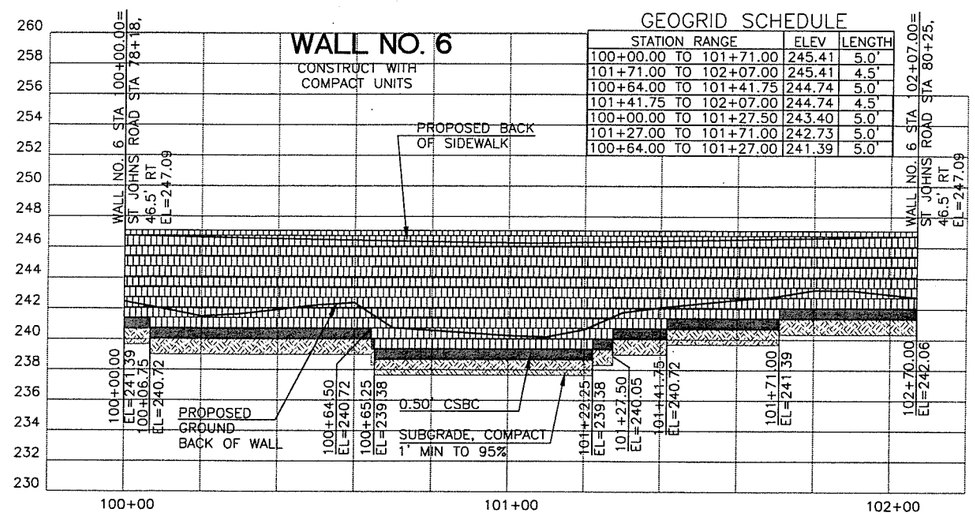

GEOGRID SCHEDULE

STATION RANGE	ELEV	LENGTH
100+00.00 TO 101+71.00	245.41	5.0'
101+71.00 TO 102+07.00	245.41	4.5'
100+64.00 TO 101+41.75	244.74	5.0'
101+41.75 TO 102+07.00	244.74	4.5'
100+00.00 TO 101+27.50	243.40	5.0'
101+27.00 TO 101+71.00	242.73	5.0'
100+64.00 TO 101+27.00	241.39	5.0'

DESIGNED	ME/JM
DRAWN	KB/RK
CRP	301422
HOR.	SEE SHEET
VERT.	SEE SHEET
DATE	07/31/05
DWG:	W01
SHEET	40 OF 151

CALL 48 HOURS BEFORE YOU DIG 1-800-553-4344 "It's the Law" NORTHWEST UTILITIES NOTIFICATION CENTER

STEVEN J. LIMOCK STATE OF WASHINGTON 22002 REGISTERED PROFESSIONAL ENGINEER
EXPIRES: MAY 26, 2007

ENGINEERING PROGRAM DESIGN SECTION

ST JOHNS ROAD (NE 50TH AVE TO NE 72ND AVE)

RETAINING WALLS

proud past, promising future

CLARK COUNTY WASHINGTON

n:\CIP\PROJECTS\301422-STJohns-50thTo72nd\DESIGN\DWGS\W01.dwg, 7/27/2005 3:06:20 PM, kerlinr

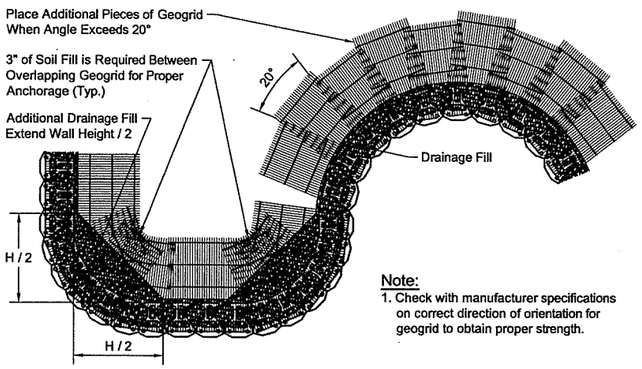

Note:
1. Check with manufacturer specifications on correct direction of orientation for geogrid to obtain proper strength.

Geogrid Installation on Curves

Base Leveling Pad Notes:

1. The leveling pad is to be constructed of crushed stone or 2,000 psi± unreinforced concrete
2. The base foundation is to be approved by the site geotechnical engineer prior to placement of the leveling pad.

Standard Unit	
Width:	18"
*Depth:	21 1/2"
Height:	8"
*Weight:	115 lbs

Cap Unit	
Width:	18"
*Depth:	10 1/2"
Height:	4"
*Weight:	45 lbs

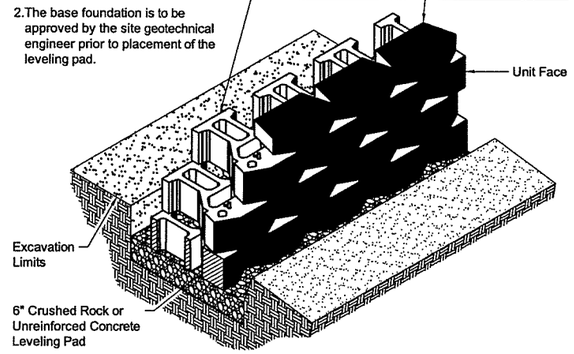

Standard Unit/Base Pad Isometric Section View

* Dimensions & Weight May Vary by Region

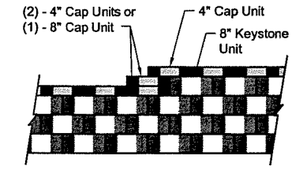

Note:
1. Secure all cap units with Keystone Kapseal or equal.

Top of Wall Steps

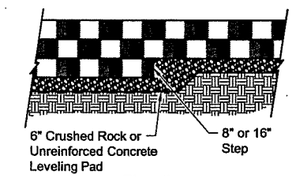

Elevation

Note:
1. The leveling pad is to be constructed of crushed stone or 2000 psi ± unreinforced concrete.

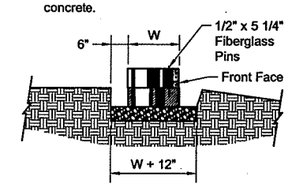

Section

Leveling Pad Detail

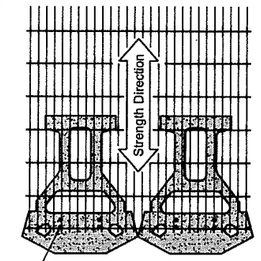

Geogrid is to be Placed on Level Backfill and Extended Over the Fiberglass Pins. Place Next Unit. Pull Grid Taught and Backfill. Stake as required.

Grid & Pin Connection

Standard Elevation

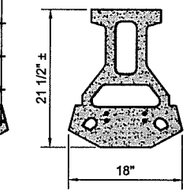

Standard Plan

Standard Unit

* Dimensions May Vary by Region

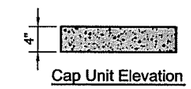

Cap Unit Elevation

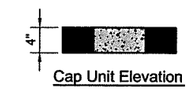

Cap Unit Elevation

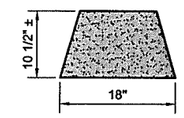

Cap Unit Plan

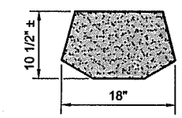

Cap Unit Plan

Universal Cap Unit Option

* Dimensions & Availability Will Vary by Region

3-Plane Split Cap Unit Option

* Dimensions & Availability Will Vary by Region

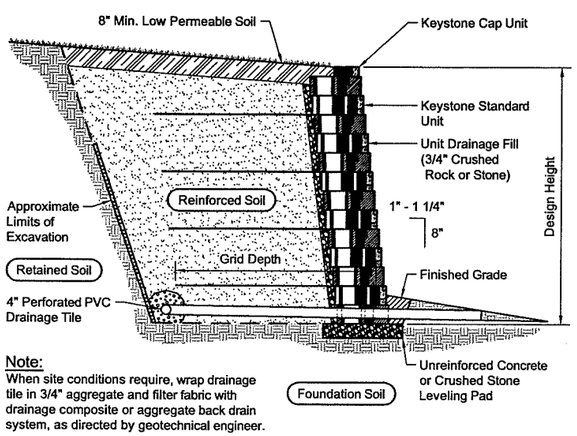

Note:
When site conditions require, wrap drainage tile in 3/4" aggregate and filter fabric with drainage composite or aggregate back drain system, as directed by geotechnical engineer.

Typical Reinforced Wall Section

Standard Unit - 1" Setback

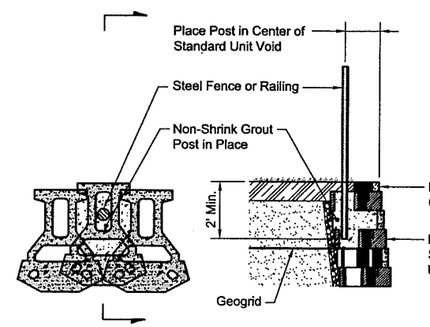

Fence Plan Detail

Fence SectionDetail

Standard Unit - 1" Setback

PRELIMINARY

DESIGNED ME/JM
DRAWN KB/RK
CRP 301422
HOR. SEE SHEET
VERT. SEE SHEET
DATE 07/31/05
DWG: W02
SHEET 41 OF 151

CALL 48 HOURS BEFORE YOU DIG 1-800-553-4344 "It's the Law" NORTHWEST UTILITIES NOTIFICATION CENTER

MICHAEL W. LEMOCK STATE OF WASHINGTON 22830 REGISTERED PROFESSIONAL ENGINEER EXPIRES: MAR 28, 2007

ENGINEERING PROGRAM
DESIGN SECTION

ST JOHNS ROAD (NE 50TH AVE TO NE 72ND AVE)
RETAINING WALL (1, 2, 3, 4) DETAILS

proud past, promising future
CLARK COUNTY WASHINGTON

n:\CIP\PROJECTS\301422-STJohns-50thTo72nd\DESIGN\DWGS\W02.dwg, 7/27/2005 3:06:45 PM, kerlinr

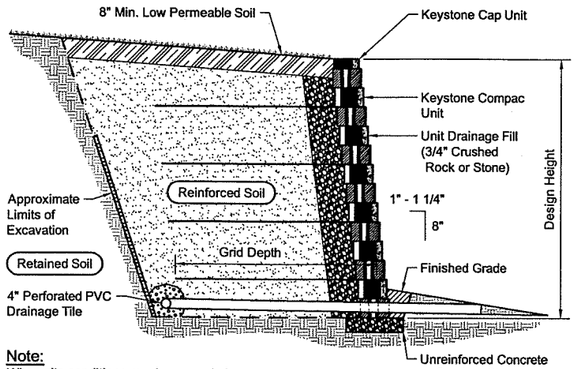

Note:
When site conditions require, wrap drainage tile in 3/4" aggregate and filter fabric with drainage composite or aggregate back drain system, as directed by geotechnical engineer.

Typical Reinforced Wall Section

Compac Unit - 1" Setback

Base Leveling Pad Notes:

1. The leveling pad is to be constructed of crushed stone or 2,000 psi± unreinforced concrete
2. The base foundation is to be approved by the site geotechnical engineer prior to placement of the leveling pad.

Compac Unit	
Width:	18"
*Depth:	12"
Height:	8"
*Weight:	85 lbs

Cap Unit	
Width:	18"
*Depth:	10 1/2"
Height:	4"
*Weight:	45 lbs

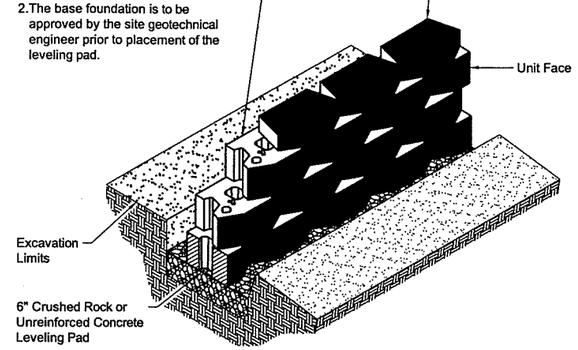

Compac Unit/Base Pad Isometric Section View

* Dimensions & Weight May Vary by Region

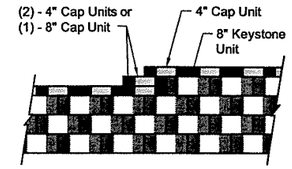

Note:
1. Secure all cap units with Keystone Kapseal or equal.

Top of Wall Steps

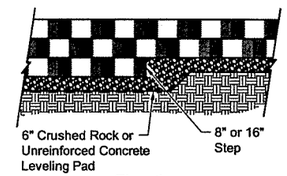

Elevation

Note:
1. The leveling pad is to be constructed of crushed stone or 2000 psi ± unreinforced concrete.

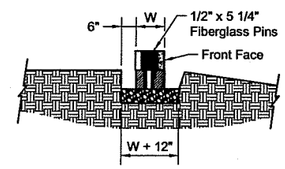

Section

Leveling Pad Detail

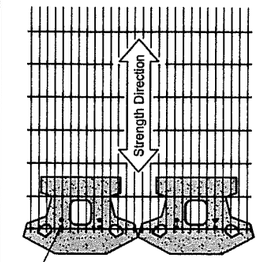

Geogrid is to be Placed on Level Backfill and Extended Over the Fiberglass Pins. Place Next Unit. Pull Grid Taught and Backfill. Stake as required.

Grid & Pin Connection

Compac Elevation

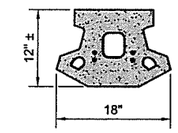

Compac Plan

Compac Unit

* Dimensions May Vary by Region

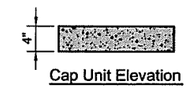

Cap Unit Elevation

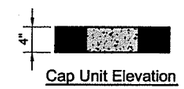

Cap Unit Elevation

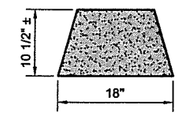

Cap Unit Plan

Universal Cap Unit Option

* Dimensions & Availability Will Vary by Region

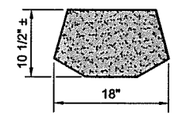

Cap Unit Plan

3-Plane Split Cap Unit Option

* Dimensions & Availability Will Vary by Region

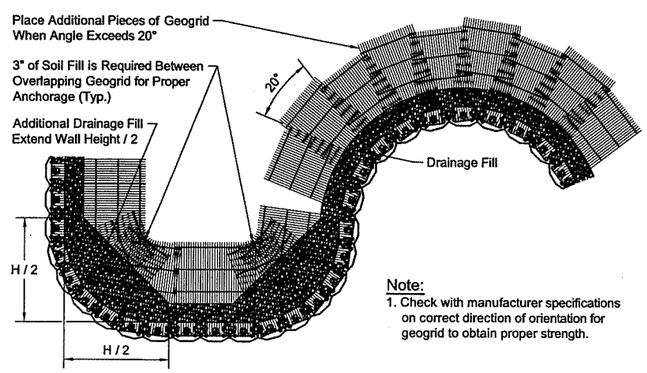

Note:
1. Check with manufacturer specifications on correct direction of orientation for geogrid to obtain proper strength.

Geogrid Installation on Curves

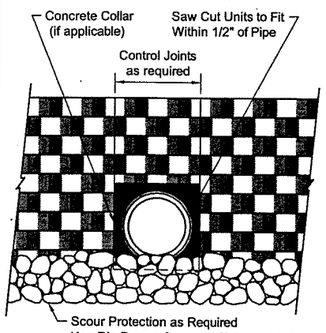

Note:
For pipes larger than 24", a concrete collar may be cast around pipe for ease of construction and appearance.

Typical Pipe Outlet Detail

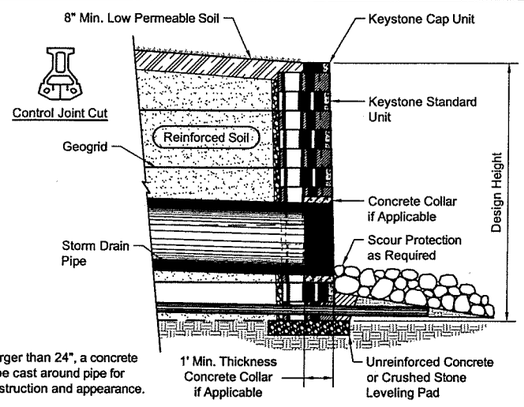

Typical Pipe Outlet Section

Standard Unit - Near Vertical Setback

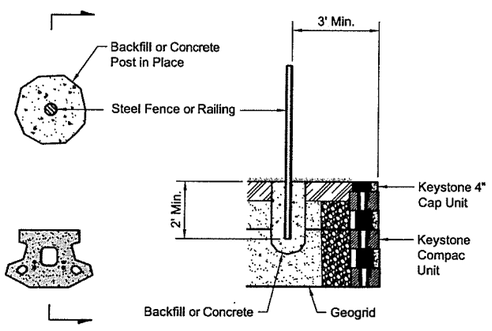

Fence Plan Detail

Fence SectionDetail

Compac Unit - Near Vertical Setback

Note:
1. Auger through geogrid layers.
2. Backfill or concrete guardrail post in place.

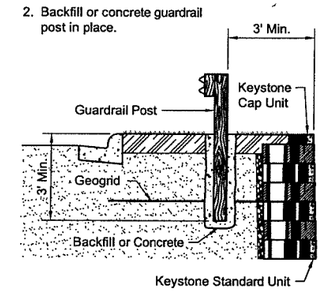

Typical Guardrail Detail

Standard Unit - Near Vertical Setback Shown

PRELIMINARY

DESIGNED ME/JM
DRAWN KB/RK
CRP 301422
HOR. SEE SHEET
VERT. SEE SHEET
DATE 07/31/05
DWG: W03
SHEET 42 OF 151

CALL 48 HOURS BEFORE YOU DIG 1-800-553-4344 "It's the Law" NORTHWEST UTILITIES NOTIFICATION CENTER

MICHAEL W. KIRBICK STATE OF WASHINGTON 29930 REGISTERED PROFESSIONAL ENGINEER EXPIRES MAY 26, 2007

ENGINEERING PROGRAM
DESIGN SECTION

ST JOHNS ROAD (NE 50TH AVE TO NE 72ND AVE)
RETAINING WALL (5 & 6) DETAILS

proud past, promising future
CLARK COUNTY WASHINGTON

n:\CIP\PROJECTS\301422-STJohns-50thTo72nd\DESIGN\DWGS\W03.dwg, 7/27/2005 3:07:11 PM, kerlinr

PRELIMINARY

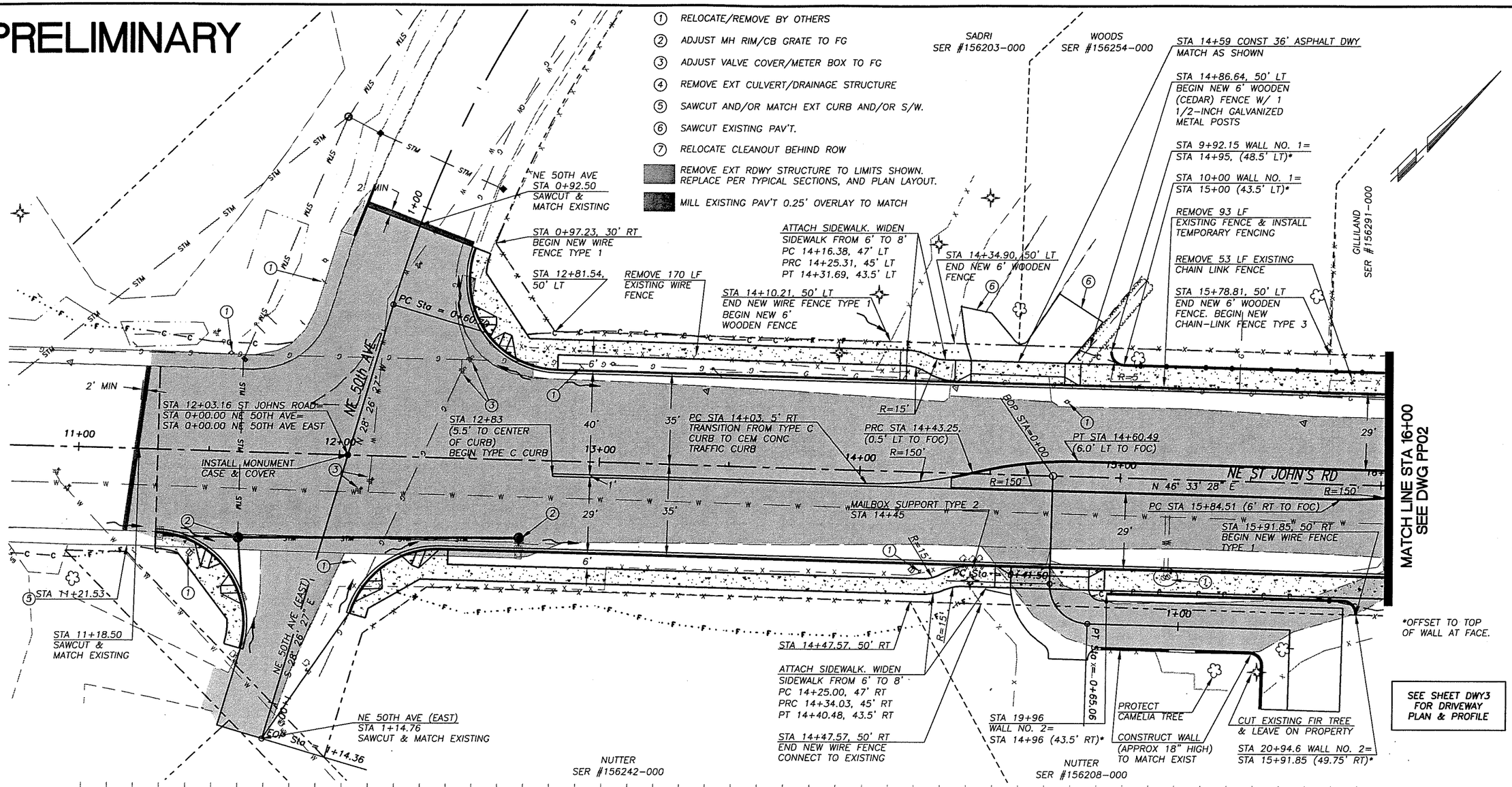

UNADJUSTED EARTHWORK QUANTITIES

EXCAVATION	2620
EMBANKMENT	300

DESIGNED	ME/JM
DRAWN	KB/RK
CRP	301422
HOR.	SEE SHEET
VERT.	SEE SHEET
DATE	07/31/05
DWG:	PP1
SHEET	43 OF 151

CALL 48 HOURS BEFORE YOU DIG 1-800-553-4344 "It's the Law" NORTHWEST UTILITIES NOTIFICATION CENTER

STATE OF WASHINGTON MICHAEL R. MURDOCK 29600 PROFESSIONAL ENGINEER EXPIRES JULY 26, 2007

ENGINEERING PROGRAM
DESIGN SECTION

ST JOHNS ROAD (NE 50TH AVE TO NE 72ND AVE)
PLAN & PROFILE ST. JOHNS (STA 26+00 TO 31+00)

proud past, promising future

CLARK COUNTY WASHINGTON

n:\CIP\PROJECTS\301422-STJohns-50thTo72nd\DESIGN\DWGS\PP01.dwg, 7/27/2005 3:07:42 PM, kerlinr

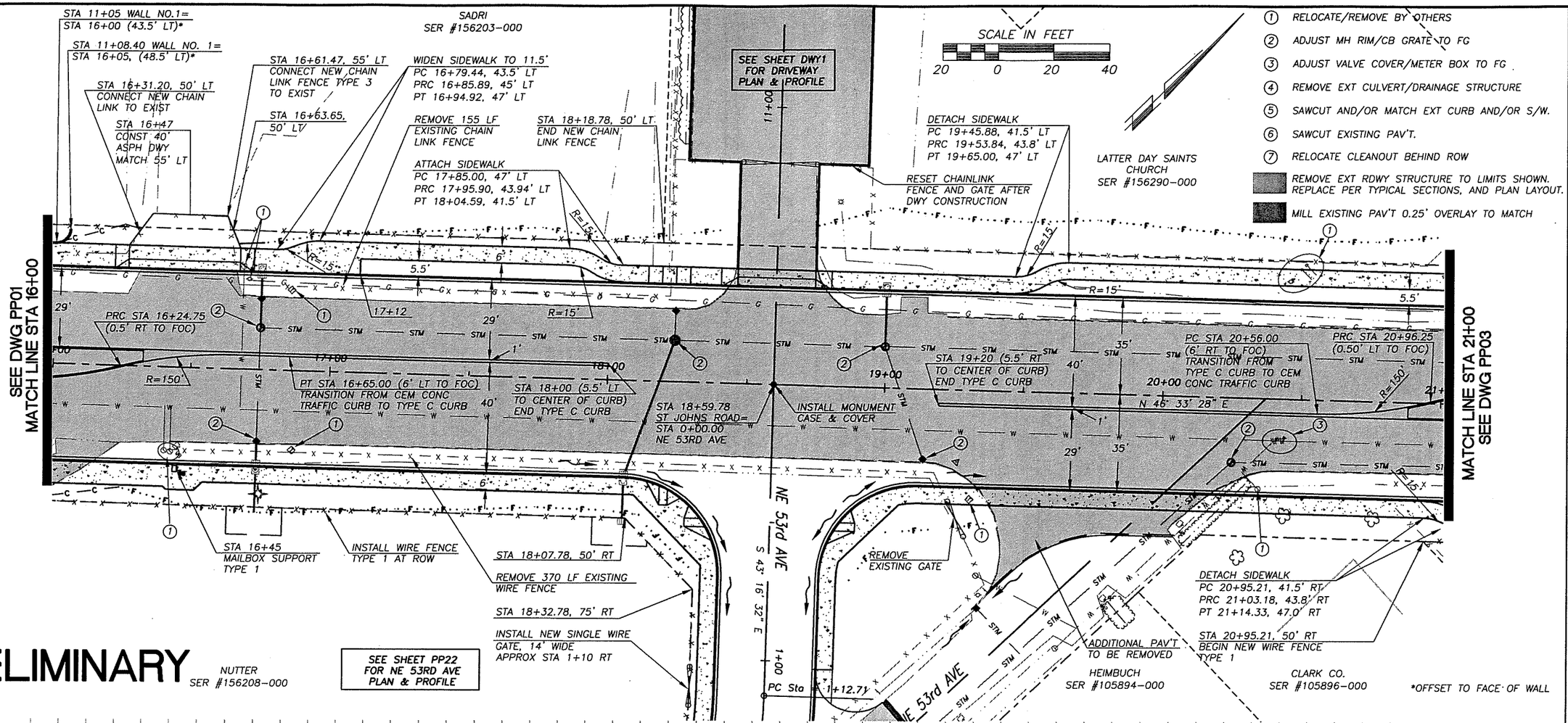

PRELIMINARY

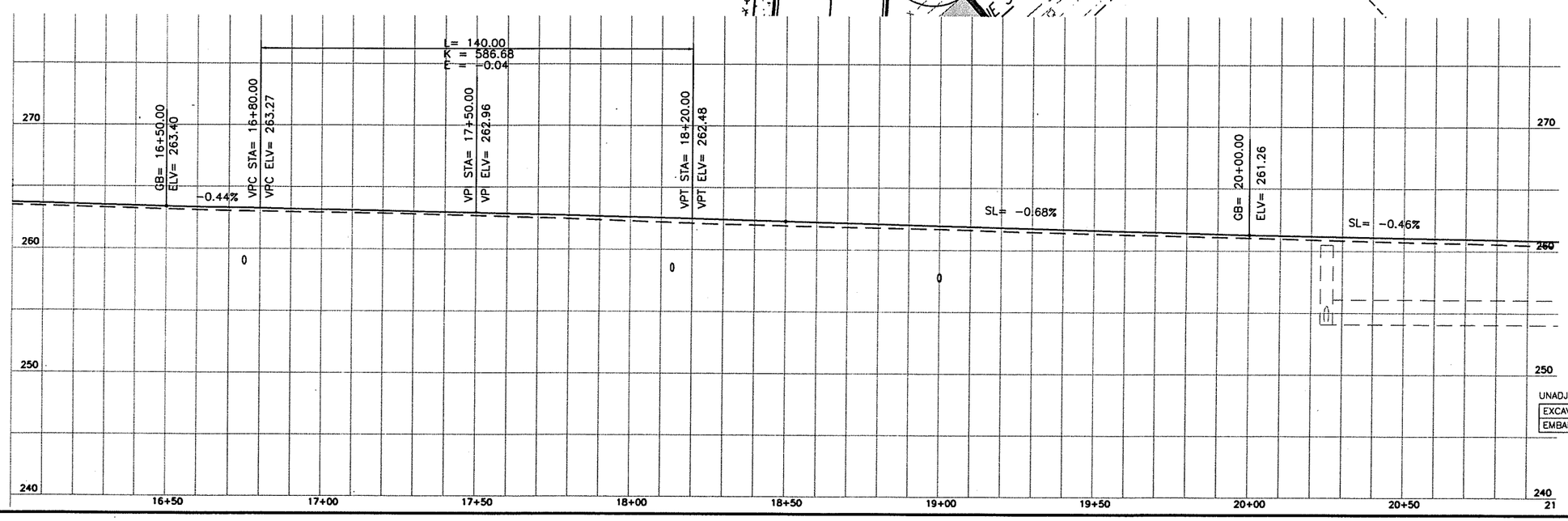

UNADJUSTED EARTHWORK QUANTITIES

EXCAVATION	1600
EMBANKMENT	900

DESIGNED	ME/JM
DRAWN	KB/RK
CRP	301422
HOR.	SEE SHEET
VERT.	SEE SHEET
DATE	07/31/05
DWG:	PP2
SHEET	44 OF 151

CALL 48 HOURS BEFORE YOU DIG 1-800-553-4344 "It's the Law" NORTHWEST UTILITIES NOTIFICATION CENTER

EXPIRES:MAY 28, 2007

ENGINEERING PROGRAM DESIGN SECTION

ST JOHNS ROAD (NE 50TH AVE TO NE 72ND AVE)
PLAN & PROFILE ST. JOHNS (STA 31+00 TO 36+00)

proud past, promising future

CLARK COUNTY WASHINGTON

n:\CIP\PROJECTS\301422-STJohns-50thTo72nd\DESIGN\DWGS\PP02.dwg, 7/27/2005 3:08:12 PM, kerlinr

PRELIMINARY

1. RELOCATE/REMOVE BY OTHERS
2. ADJUST MH RIM/CB GRATE TO FG
3. ADJUST VALVE COVER/METER BOX TO FG
4. REMOVE EXT CULVERT/DRAINAGE STRUCTURE
5. SAWCUT AND/OR MATCH EXT CURB AND/OR S/W.
6. SAWCUT EXISTING PAV'T.
7. RELOCATE CLEANOUT BEHIND ROW

REMOVE EXT RDWY STRUCTURE TO LIMITS SHOWN. REPLACE PER TYPICAL SECTIONS, AND PLAN LAYOUT.

MILL EXISTING PAV'T 0.25' OVERLAY TO MATCH

SCALE IN FEET 20 0 20 40

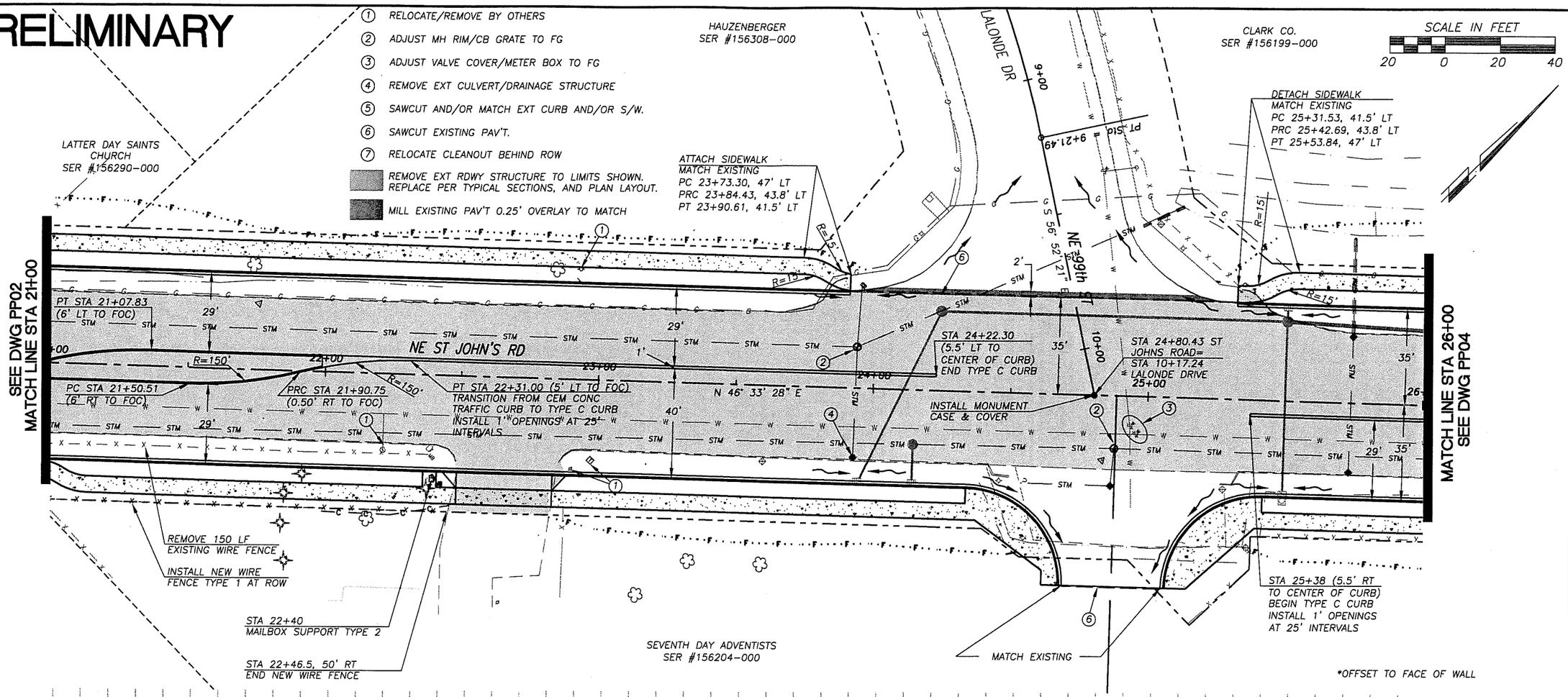

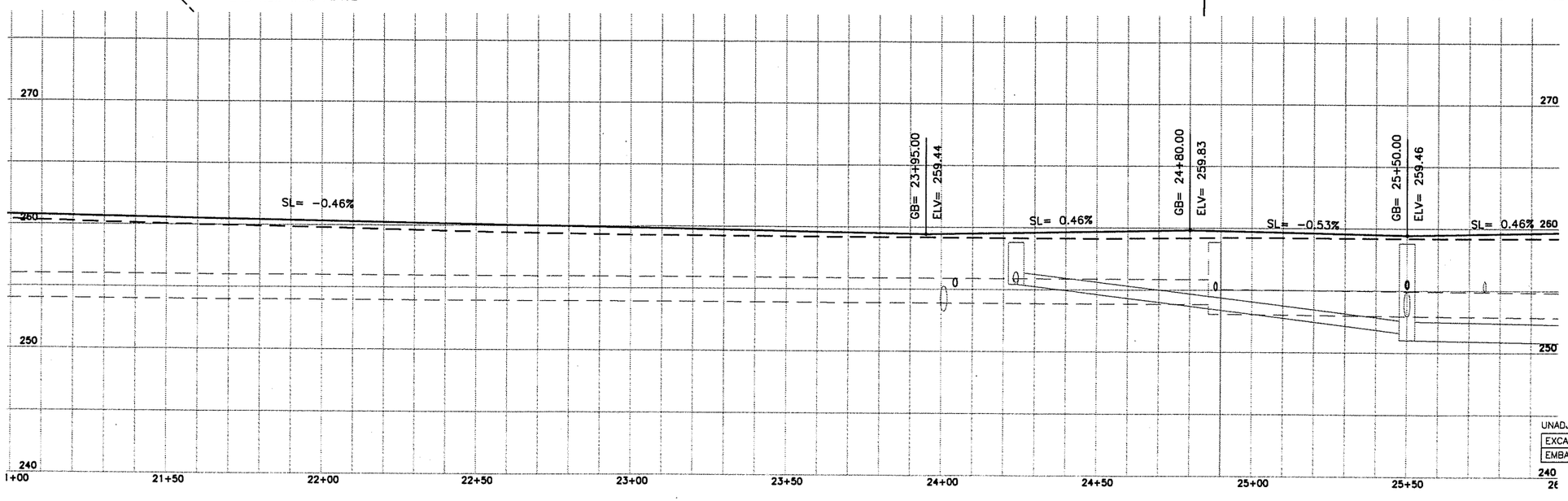

UNADJUSTED EARTHWORK QUANTITIES

EXCAVATION	1650
EMBANKMENT	580

DESIGNED	ME/JM
DRAWN	KB/RK
CRP	301422
HOR.	SEE SHEET
VERT.	SEE SHEET
DATE	07/31/05
DWG:	PP3
SHEET	45 OF 151

CALL 48 HOURS BEFORE YOU DIG 1-800-553-4344 "It's the Law" NORTHWEST UTILITIES NOTIFICATION CENTER

MICHAEL M. ERICK STATE OF WASHINGTON 22368 PROFESSIONAL ENGINEER EXPIRES JANUARY 26, 2007

ENGINEERING PROGRAM
DESIGN SECTION

ST JOHNS ROAD (NE 50TH AVE TO NE 72ND AVE)
PLAN & PROFILE ST. JOHNS (STA 36+00 TO 41+00)

proud past, promising future
CLARK COUNTY WASHINGTON

N:\CIP\PROJECTS\301422-STJohns-50thTo72nd\DESIGN\DWGS\PP03.dwg, 8/17/2005 8:23:04 AM, milnej

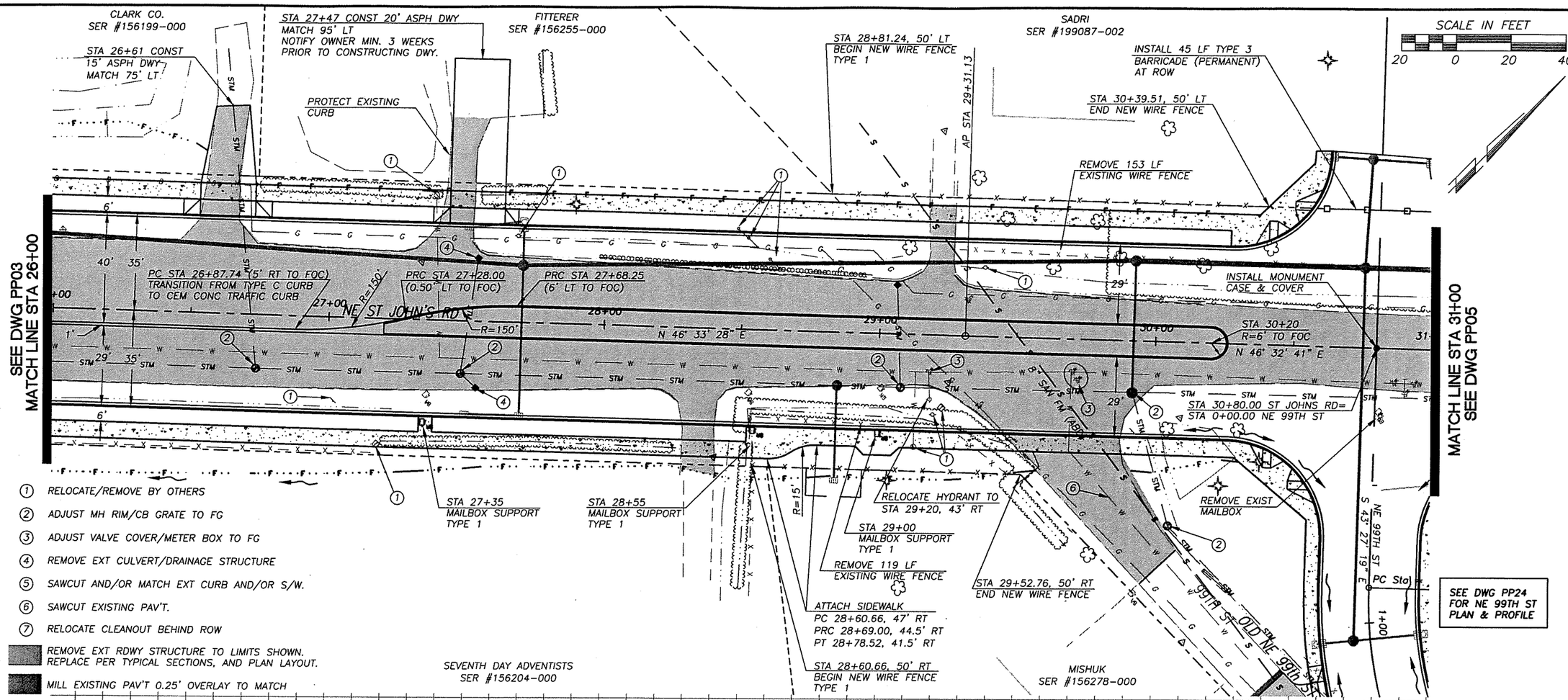

1. RELOCATE/REMOVE BY OTHERS
2. ADJUST MH RIM/CB GRATE TO FG
3. ADJUST VALVE COVER/METER BOX TO FG
4. REMOVE EXT CULVERT/DRAINAGE STRUCTURE
5. SAWCUT AND/OR MATCH EXT CURB AND/OR S/W.
6. SAWCUT EXISTING PAV'T.
7. RELOCATE CLEANOUT BEHIND ROW

REMOVE EXT RDWY STRUCTURE TO LIMITS SHOWN. REPLACE PER TYPICAL SECTIONS, AND PLAN LAYOUT.

MILL EXISTING PAV'T 0.25' OVERLAY TO MATCH

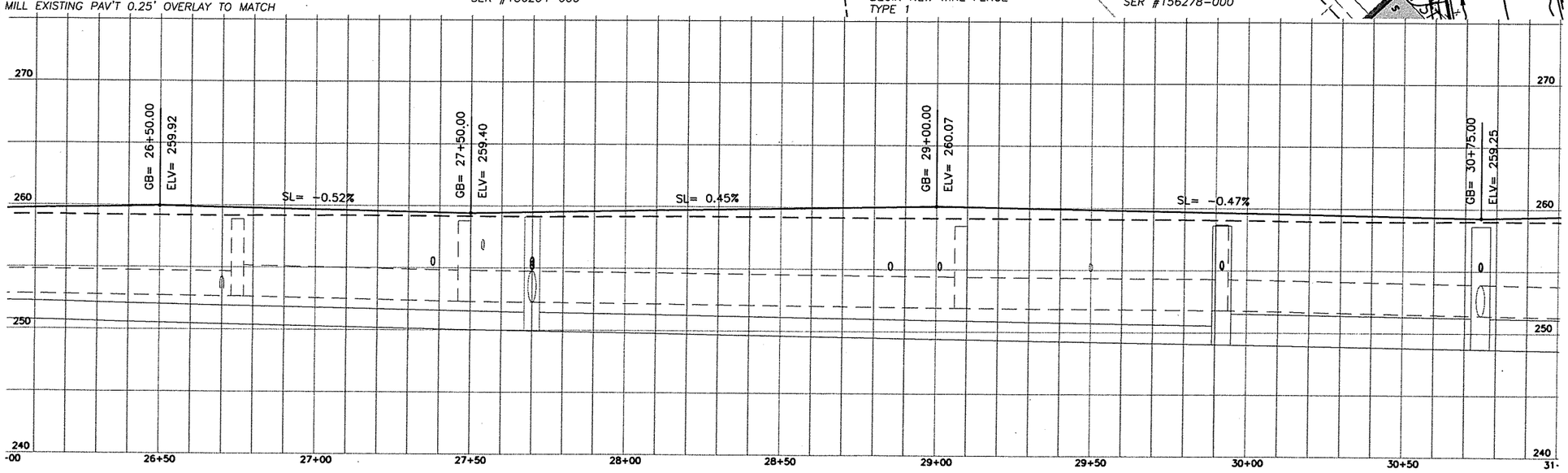

PRELIMINARY

UNADJUSTED EARTHWORK QUANTITIES

EXCAVATION	50
EMBANKMENT	50

DESIGNED ME/JM
DRAWN KB/RK
CRP 301422
HOR. SEE SHEET
VERT. SEE SHEET
DATE 07/31/05
DWG: PP4
SHEET 46 OF 151

CALL 48 HOURS BEFORE YOU DIG 1-800-553-4344 "It's the Law" NORTHWEST UTILITIES NOTIFICATION CENTER

MICHAEL M. ERICK STATE OF WASHINGTON REGISTERED PROFESSIONAL ENGINEER
EXPIRES MAY 26, 2007

ENGINEERING PROGRAM
DESIGN SECTION

ST JOHNS ROAD (NE 50TH AVE TO NE 72ND AVE)
PLAN & PROFILE ST. JOHNS (STA 41+00 TO 46+00)

proud past, promising future
CLARK COUNTY WASHINGTON

n:\CIP\PROJECTS\301422-STJohns-50thTo72nd\DESIGN\DWGS\PP04.dwg, 7/27/2005 3:09:19 PM, kerlinr

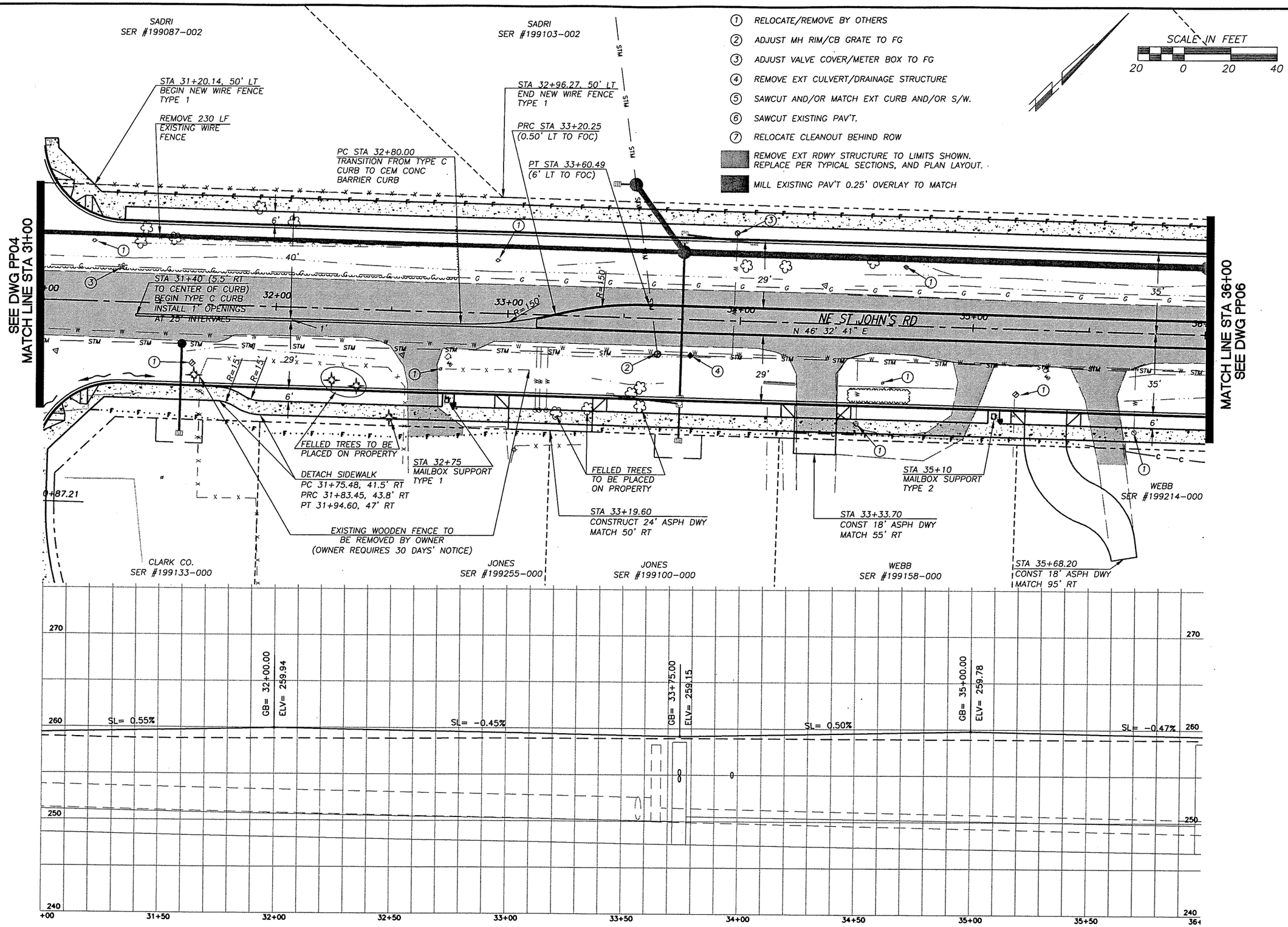

PRELIMINARY

UNADJUSTED EARTHWORK QUANTITIES

EXCAVATION	1350
EMBANKMENT	400

DESIGNED ME/JM
DRAWN KB/RK
CRP 301422
HOR. SEE SHEET
VERT. SEE SHEET
DATE 07/31/05
DWG: PP5
SHEET 47 OF 151

CALL 48 HOURS BEFORE YOU DIG
1-800-553-4344
"It's the Law"
NORTHWEST UTILITIES NOTIFICATION CENTER

STATE OF WASHINGTON
MICHAEL M. ERRICK
PROFESSIONAL ENGINEER
EXPIRES JULY 25, 2007

ENGINEERING PROGRAM
DESIGN SECTION

ST JOHNS ROAD (NE 50TH AVE TO NE 72ND AVE)
PLAN & PROFILE ST. JOHNS (STA 46+00 TO 51+00)

proud past. promising future
CLARK COUNTY
WASHINGTON

n:\CIP\PROJECTS\301422-STJohns-50thTo72nd\DESIGN\DWGS\PP05.dwg, 7/27/2005 3:09:49 PM, kerlinr

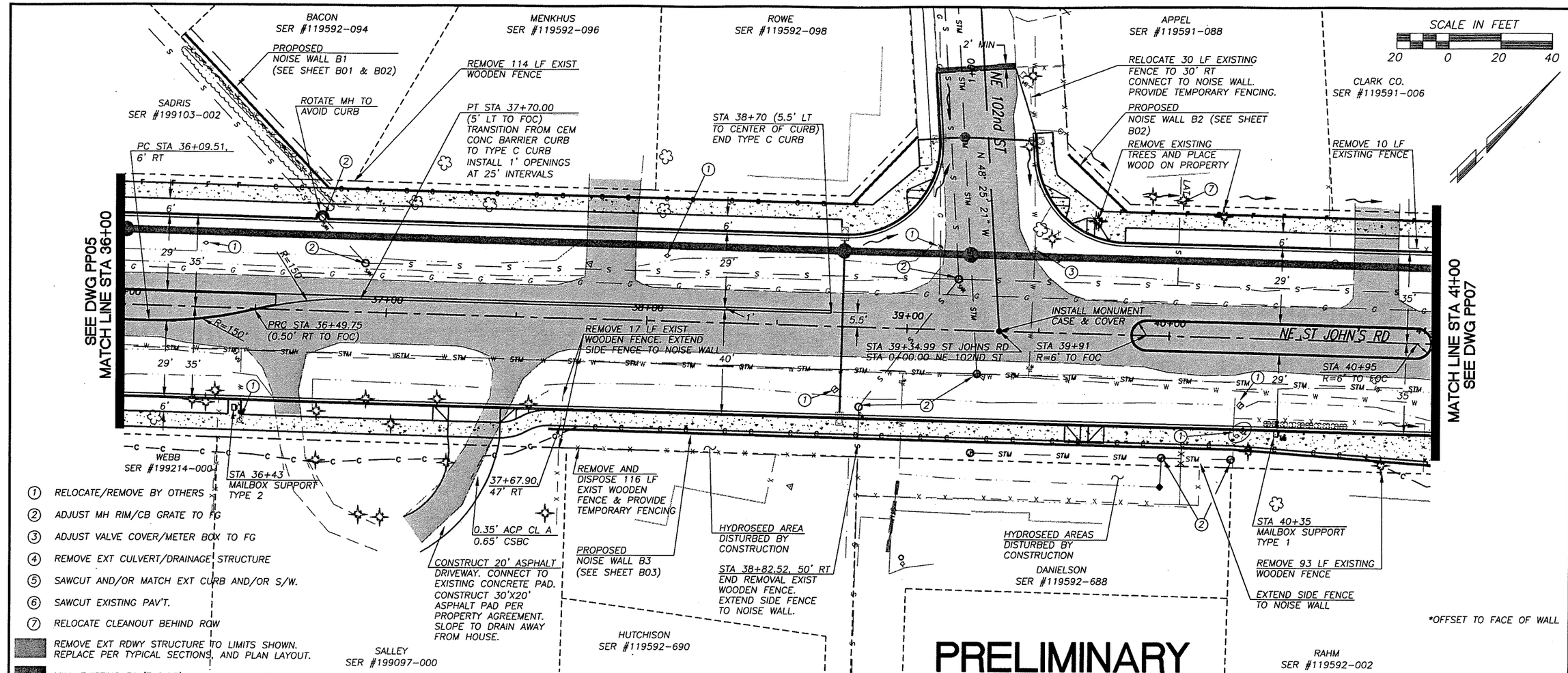

1. RELOCATE/REMOVE BY OTHERS
2. ADJUST MH RIM/CB GRATE TO FG
3. ADJUST VALVE COVER/METER BOX TO FG
4. REMOVE EXT CULVERT/DRAINAGE STRUCTURE
5. SAWCUT AND/OR MATCH EXT CURB AND/OR S/W.
6. SAWCUT EXISTING PAV'T.
7. RELOCATE CLEANOUT BEHIND ROW

REMOVE EXT RDWY STRUCTURE TO LIMITS SHOWN. REPLACE PER TYPICAL SECTIONS, AND PLAN LAYOUT.

MILL EXISTING PAV'T 0.25' OVERLAY TO MATCH

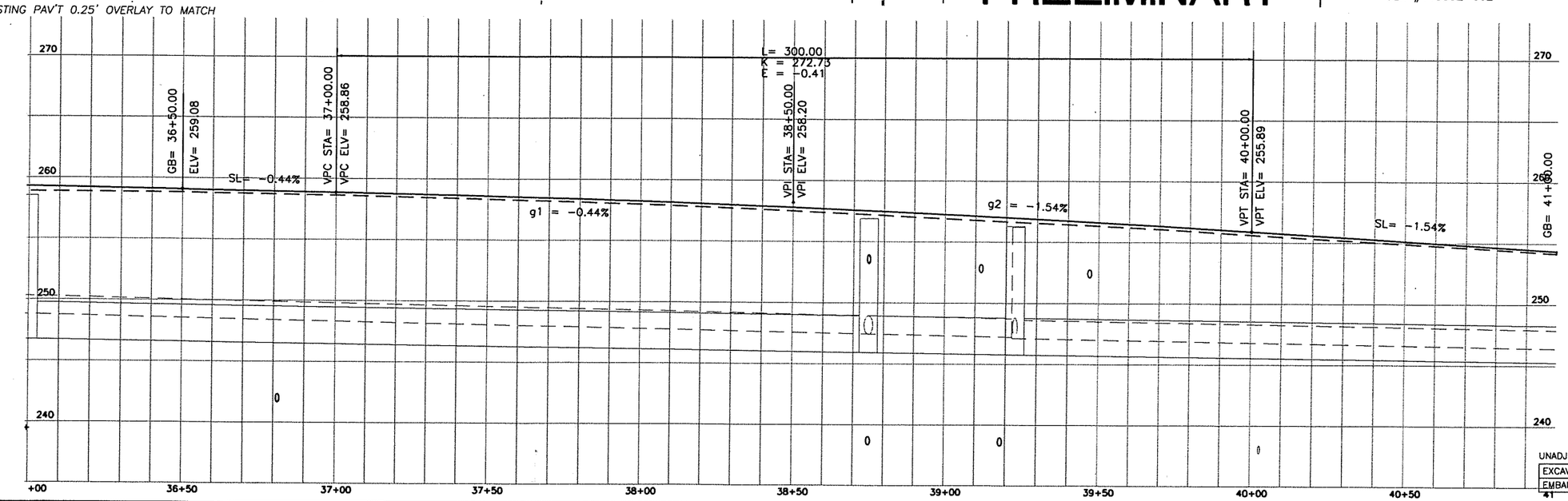

UNADJUSTED EARTHWORK QUANTITIES

EXCAVATION	3350
EMBANKMENT	30

DESIGNED ME/JM
DRAWN KB/RK
CRP 301422
HOR. SEE SHEET
VERT. SEE SHEET
DATE 07/31/05
DWG: PP6
SHEET 48 OF 151

CALL 48 HOURS BEFORE YOU DIG 1-800-553-4344 "It's the Law" NORTHWEST UTILITIES NOTIFICATION CENTER

STATE OF WASHINGTON MICHAEL W. ERRICK 29030 REGISTERED PROFESSIONAL ENGINEER EXPIRES MAY 28, 2007

ENGINEERING PROGRAM
DESIGN SECTION

ST JOHNS ROAD (NE 50TH AVE TO NE 72ND AVE)
PLAN & PROFILE ST. JOHNS (STA 51+00 TO 56+00)

proud past, promising future
CLARK COUNTY WASHINGTON

n:\CIP\PROJECTS\301422-STJohns-50thTo72nd\DESIGN\DWGS\PP06.dwg, 7/27/2005 3:10:22 PM, kerlinr

PRELIMINARY

1. RELOCATE/REMOVE BY OTHERS
2. ADJUST MH RIM/CB GRATE TO FG
3. ADJUST VALVE COVER/METER BOX TO FG
4. REMOVE EXT CULVERT/DRAINAGE STRUCTURE
5. SAWCUT AND/OR MATCH EXT CURB AND/OR S/W.
6. SAWCUT EXISTING PAV'T.
7. RELOCATE CLEANOUT BEHIND ROW

REMOVE EXT RDWY STRUCTURE TO LIMITS SHOWN. REPLACE PER TYPICAL SECTIONS, AND PLAN LAYOUT.

MILL EXISTING PAV'T 0.25' OVERLAY TO MATCH

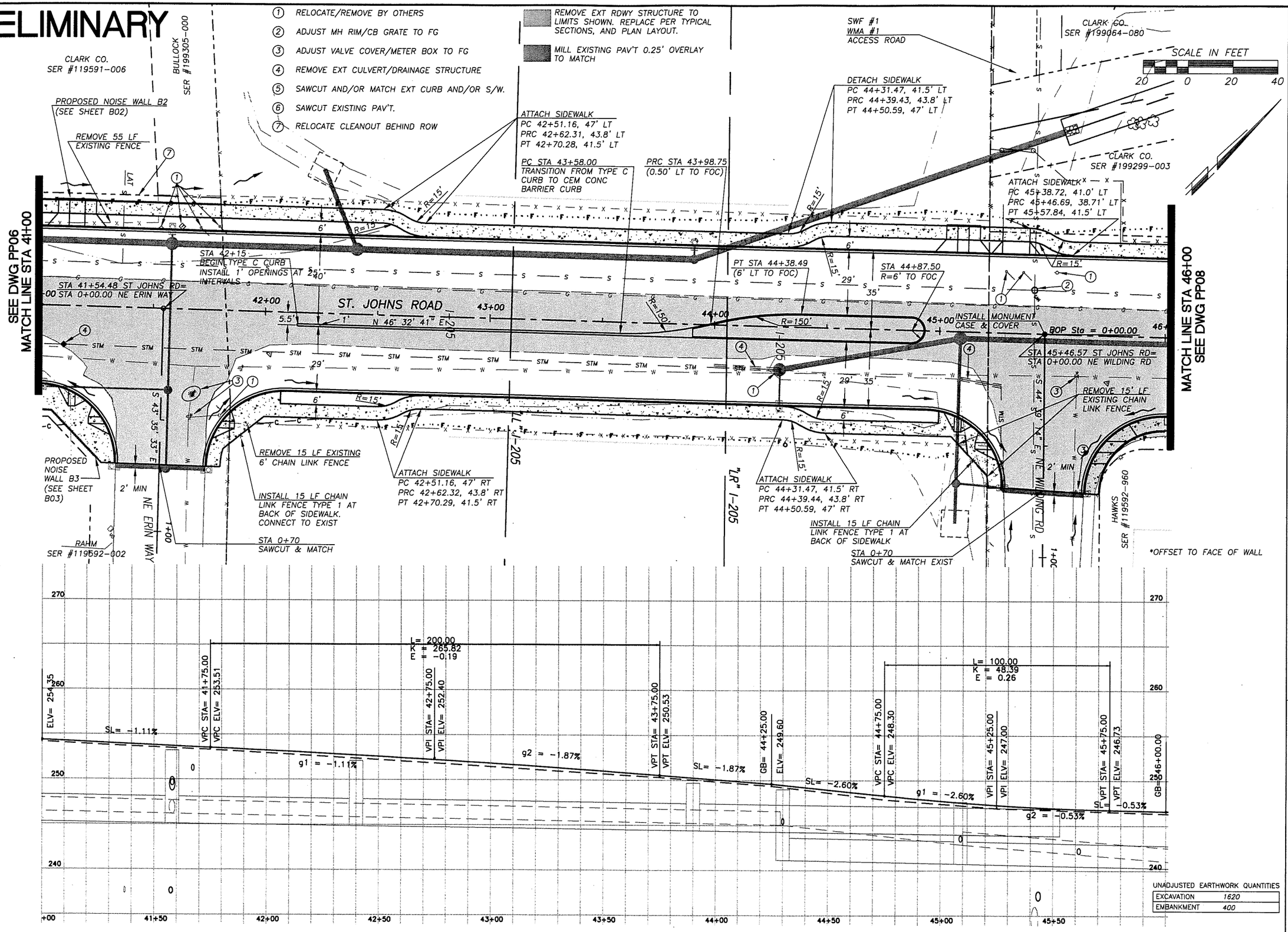

UNADJUSTED EARTHWORK QUANTITIES

EXCAVATION	1620
EMBANKMENT	400

DESIGNED	ME/JM
DRAWN	KB/RK
CRP	301422
HOR.	SEE SHEET
VERT.	SEE SHEET
DATE	07/31/05
DWG:	PP7
SHEET	49 OF 151

CALL 48 HOURS BEFORE YOU DIG 1-800-553-4344 "It's the Law" NORTHWEST UTILITIES NOTIFICATION CENTER

M. R. MERLICK STATE OF WASHINGTON 27000 REGISTERED PROFESSIONAL ENGINEER EXPIRES: MAY 26, 2007

ENGINEERING PROGRAM
DESIGN SECTION

ST JOHNS ROAD (NE 50TH AVE TO NE 72ND AVE)
PLAN & PROFILE ST. JOHNS (STA 56+00 TO 61+00)

proud past, promising future

CLARK COUNTY
WASHINGTON

N:\CIP\PROJECTS\301422-STJohns-50thTo72nd\DESIGN\DWG\PP07.dwg, 8/17/2005 8:11:25 AM, milnej

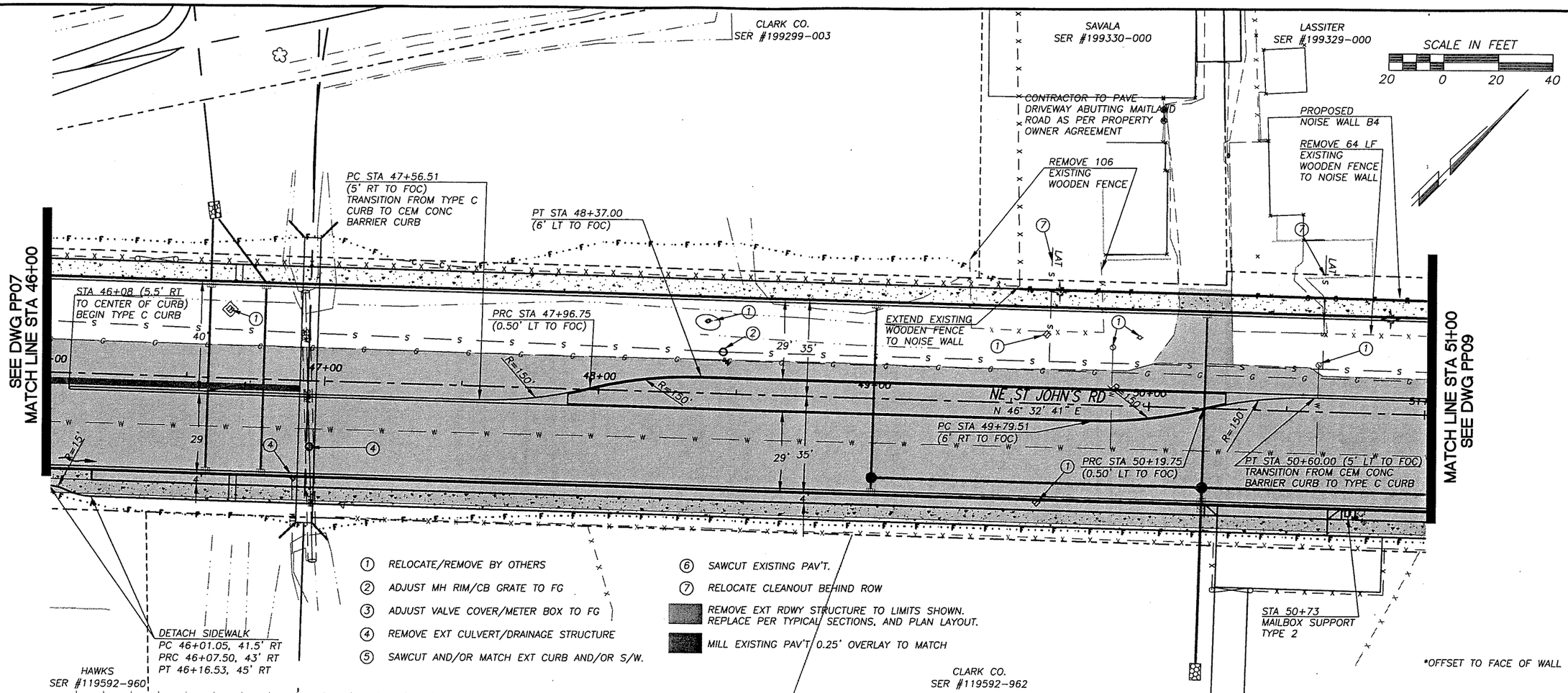

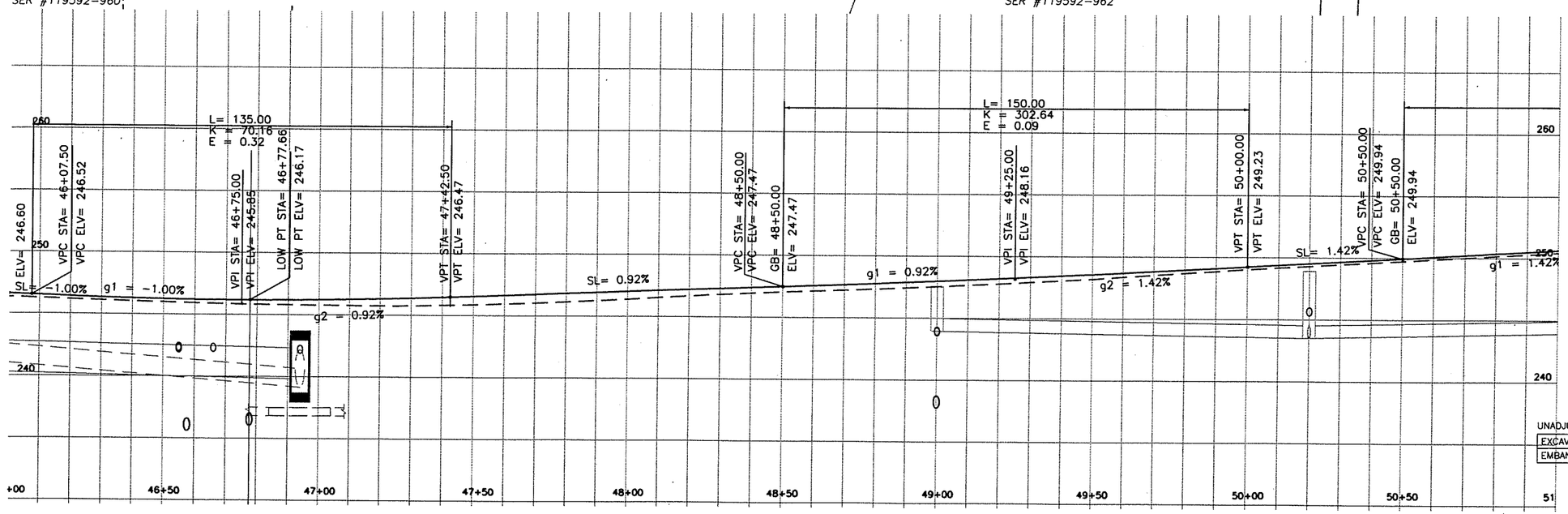

UNADJUSTED EARTHWORK QUANTITIES

EXCAVATION	1275
EMBANKMENT	500

PRELIMINARY

DESIGNED ME/JM
DRAWN KB/RK
CRP 301422
HOR. SEE SHEET
VERT. SEE SHEET
DATE 07/31/05
DWG: PP8
SHEET 50 OF 151

CALL 48 HOURS BEFORE YOU DIG 1-800-553-4344 "It's the Law" NORTHWEST UTILITIES NOTIFICATION CENTER

STATE OF WASHINGTON MICHAEL M. ERRICK 29030 REGISTERED PROFESSIONAL ENGINEER EXPIRES JULY 28, 2007

ENGINEERING PROGRAM
DESIGN SECTION

ST JOHNS ROAD (NE 50TH AVE TO NE 72ND AVE)
PLAN & PROFILE ST. JOHNS (STA 61+00 TO 66+00)

proud past, promising future
CLARK COUNTY WASHINGTON

n:\CIP\PROJECTS\301422-STJohns-50thTo72nd\DESIGN\DWGS\PP08.dwg, 7/27/2005 3:11:27 PM, kerlinr

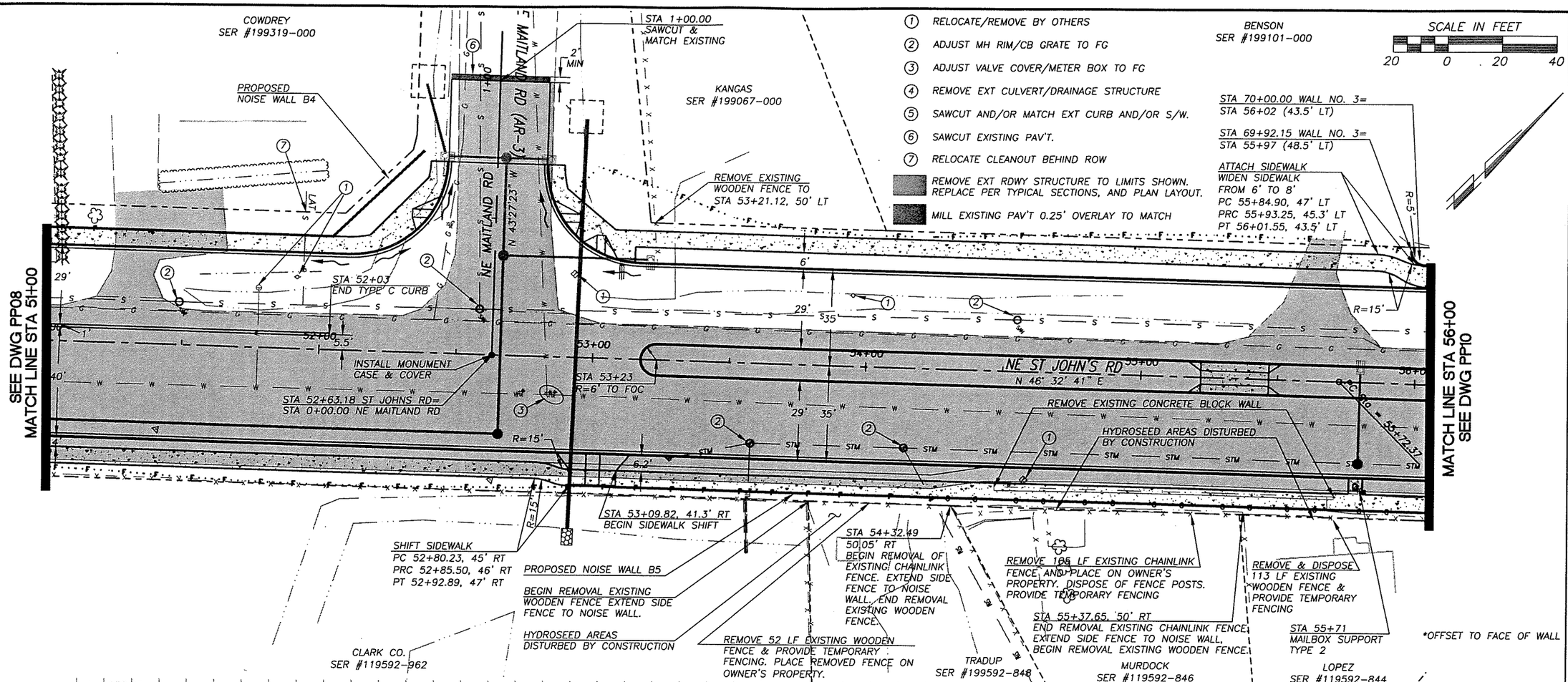

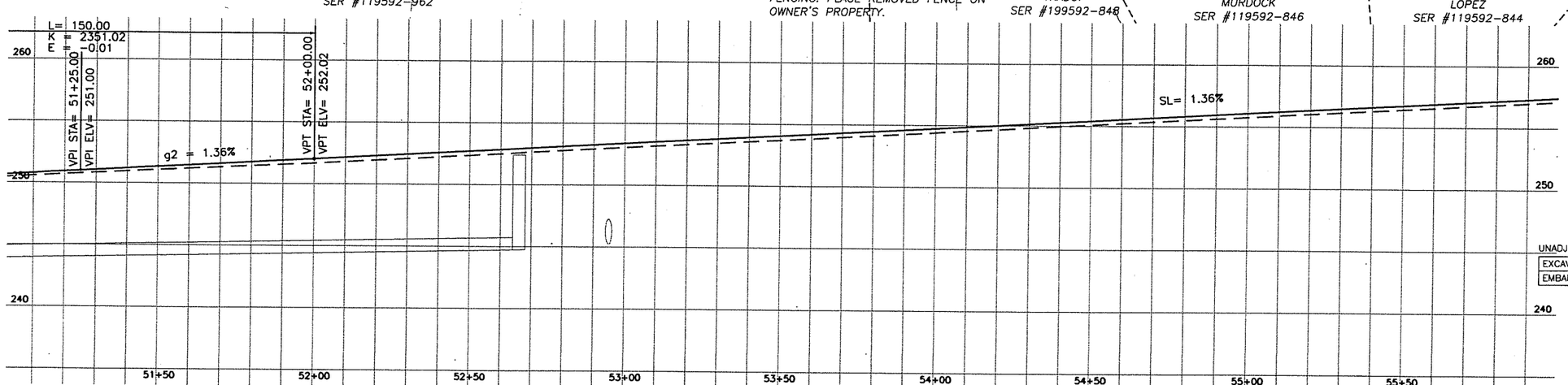

UNADJUSTED EARTHWORK QUANTITIES

EXCAVATION	1520
EMBANKMENT	560

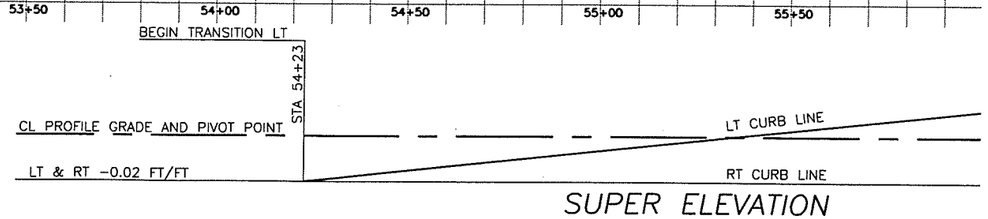

SUPER ELEVATION

PRELIMINARY

DESIGNED ME/JM
DRAWN KB/RK
CRP 301422
HOR. SEE SHEET
VERT. SEE SHEET
DATE 07/31/05
DWG: PP9
SHEET 51 OF 151

CALL 48 HOURS BEFORE YOU DIG 1-800-553-4344 "It's the Law" NORTHWEST UTILITIES NOTIFICATION CENTER

MICHAEL M. ENDRICK STATE OF WASHINGTON PROFESSIONAL ENGINEER EXPIRES JULY 26, 2007

ENGINEERING PROGRAM
DESIGN SECTION

ST JOHNS ROAD (NE 50TH AVE TO NE 72ND AVE)
PLAN & PROFILE ST. JOHNS (STA 66+00 TO 71+00)

proud past, promising future
CLARK COUNTY WASHINGTON

n:\CIP\PROJECTS\301422-STJohns-50thTo72nd\DESIGN\DWGS\PP09.dwg, 7/27/2005 3:12:14 PM, kerlinr

① RELOCATE/REMOVE BY OTHERS
② ADJUST MH RIM/CB GRATE TO FG
③ ADJUST VALVE COVER/METER BOX TO FG
④ REMOVE EXT CULVERT/DRAINAGE STRUCTURE
⑤ SAWCUT AND/OR MATCH EXT CURB AND/OR S/W.
⑥ SAWCUT EXISTING PAV'T.
⑦ RELOCATE CLEANOUT BEHIND ROW

REMOVE EXT RDWY STRUCTURE TO LIMITS SHOWN. REPLACE PER TYPICAL SECTIONS, AND PLAN LAYOUT.

MILL EXISTING PAV'T 0.25' OVERLAY TO MATCH

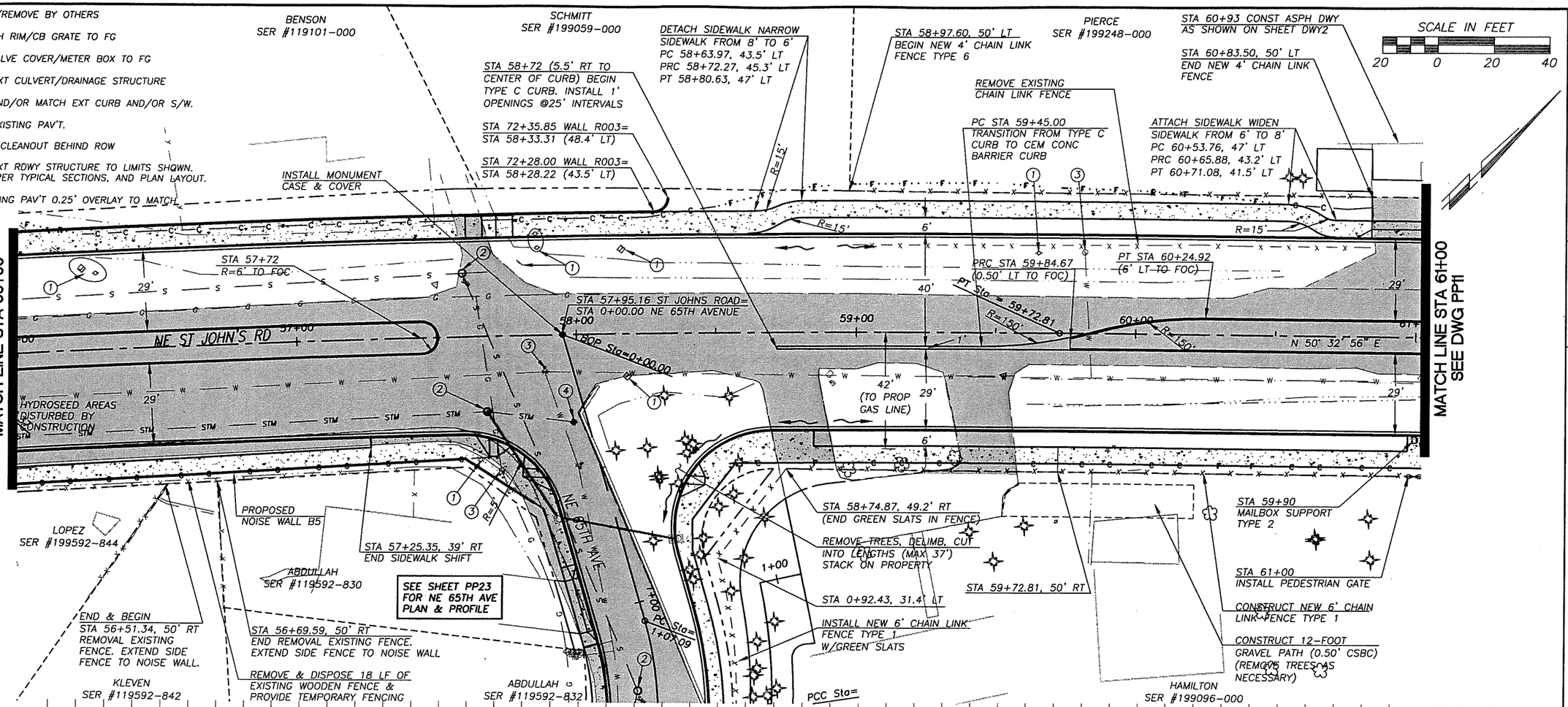

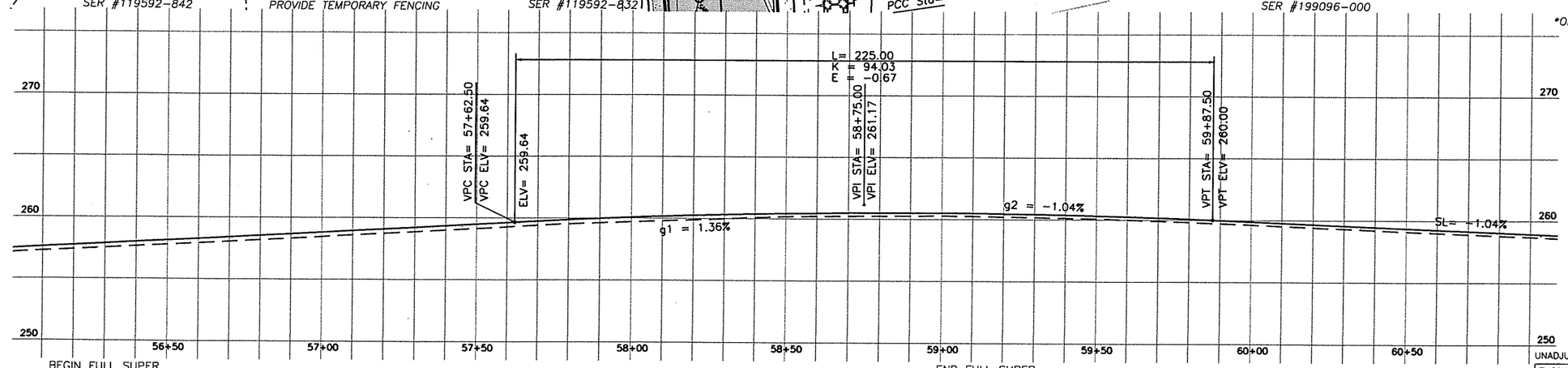

UNADJUSTED EARTHWORK QUANTITIES

EXCAVATION	2260
EMBANKMENT	130

PRELIMINARY

n:\CIPPROJECTS\301422-STJohns-50thTo72nd\DESIGN\DWGS\PP10.dwg, 7/27/2005 3:12:51 PM, kerlinr

DESIGNED	ME/JM
DRAWN	KB/RK
CRP	301422
HOR.	SEE SHEET
VERT.	SEE SHEET
DATE	07/31/05
DWG:	PP10
SHEET	52 OF 151

CALL 48 HOURS BEFORE YOU DIG 1-800-553-4344 "It's the Law" NORTHWEST UTILITIES NOTIFICATION CENTER

STATE OF WASHINGTON MICHAEL W. KERLICK 29000 PROFESSIONAL ENGINEER EXPIRES: MAY 28, 2007

ENGINEERING PROGRAM DESIGN SECTION

ST JOHNS ROAD (NE 50TH AVE TO NE 72ND AVE) PLAN & PROFILE ST. JOHNS (STA 71+00 TO 76+00)

proud past. promising future

CLARK COUNTY WASHINGTON

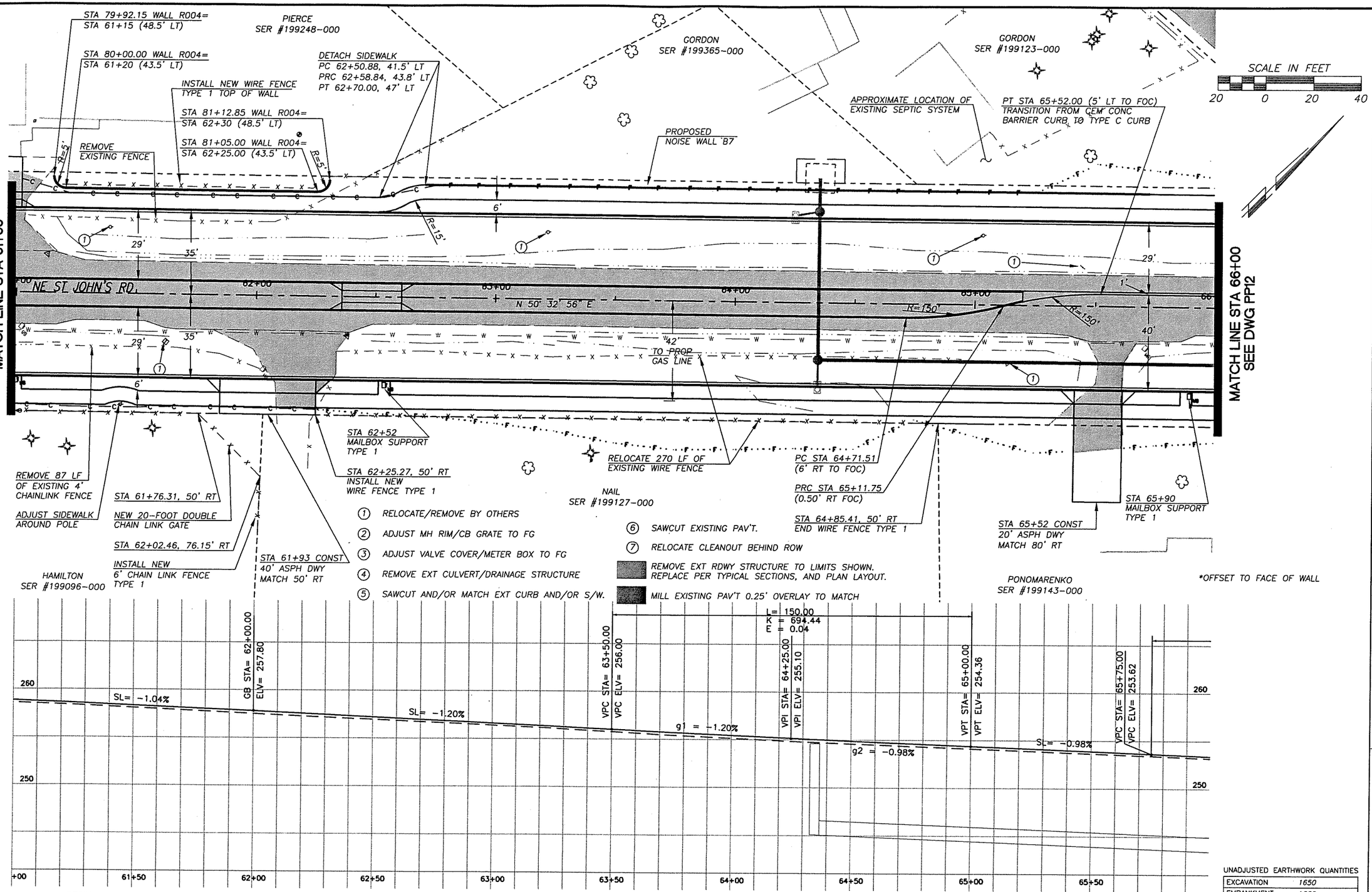

UNADJUSTED EARTHWORK QUANTITIES

EXCAVATION	1650
EMBANKMENT	1660

PRELIMINARY

DESIGNED ME/JM
DRAWN KB/RK
CRP 301422
HOR. SEE SHEET
VERT. SEE SHEET
DATE 07/31/05
DWG: PP11
SHEET 53 OF 151

CALL 48 HOURS BEFORE YOU DIG 1-800-553-4344 "It's the Law" NORTHWEST UTILITIES NOTIFICATION CENTER

STATE OF WASHINGTON MICHAEL W. KIRRICK 29630 REGISTERED PROFESSIONAL ENGINEER EXPIRES: MAY 28, 2007

ENGINEERING PROGRAM
DESIGN SECTION

ST JOHNS ROAD (NE 50TH AVE TO NE 72ND AVE)
PLAN & PROFILE ST. JOHNS (STA 76+00 TO 81+00)

proud past, promising future
CLARK COUNTY WASHINGTON

n:\CIP\PROJECTS\301422-STJohns-50thTo72nd\DESIGN\DWGS\PP11.dwg, 7/27/2005 3:13:28 PM, kerlinr

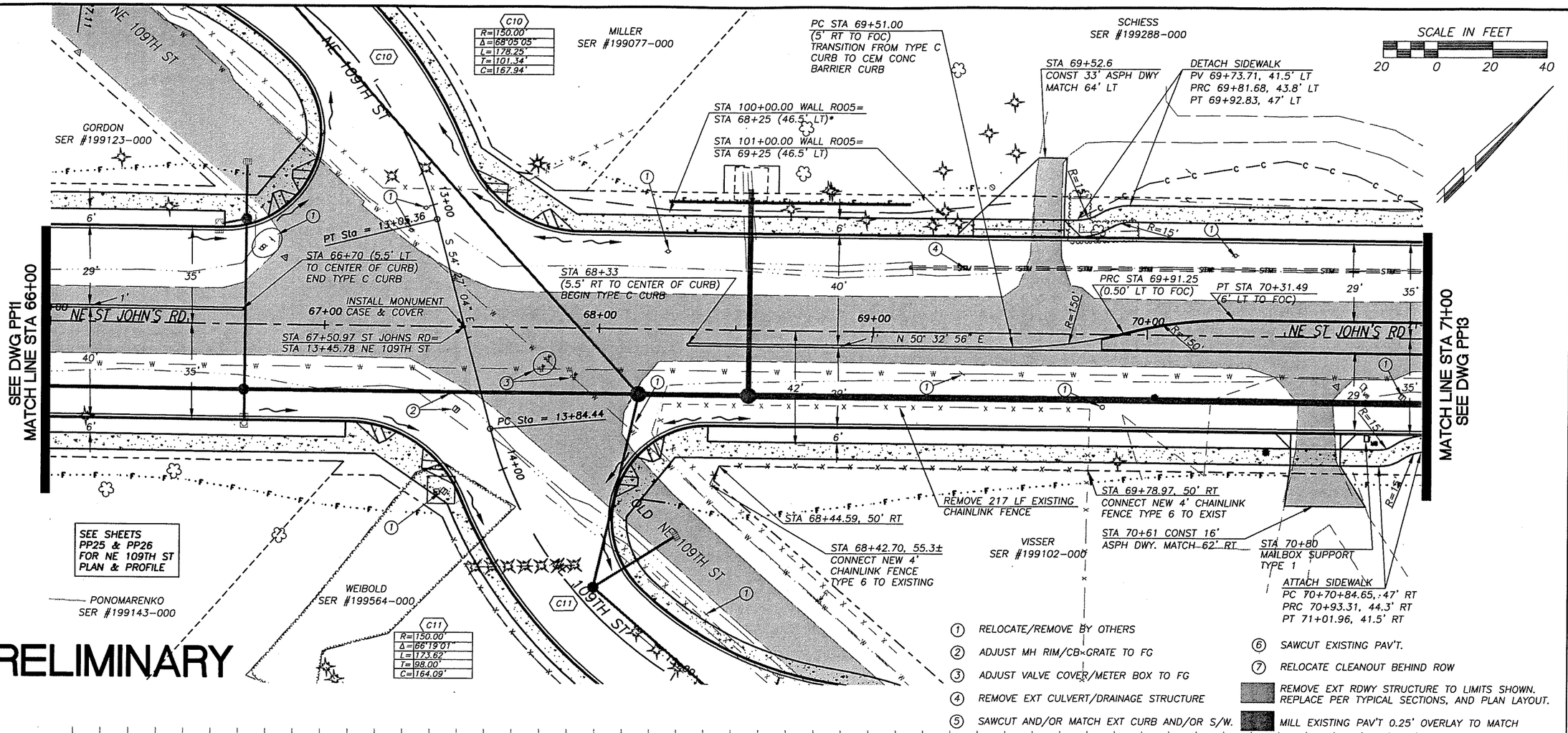

1. RELOCATE/REMOVE BY OTHERS
2. ADJUST MH RIM/CB×GRATE TO FG
3. ADJUST VALVE COVER/METER BOX TO FG
4. REMOVE EXT CULVERT/DRAINAGE STRUCTURE
5. SAWCUT AND/OR MATCH EXT CURB AND/OR S/W.
6. SAWCUT EXISTING PAV'T.
7. RELOCATE CLEANOUT BEHIND ROW

REMOVE EXT RDWY STRUCTURE TO LIMITS SHOWN. REPLACE PER TYPICAL SECTIONS, AND PLAN LAYOUT.

MILL EXISTING PAV'T 0.25' OVERLAY TO MATCH

*OFFSET TO FACE OF WALL

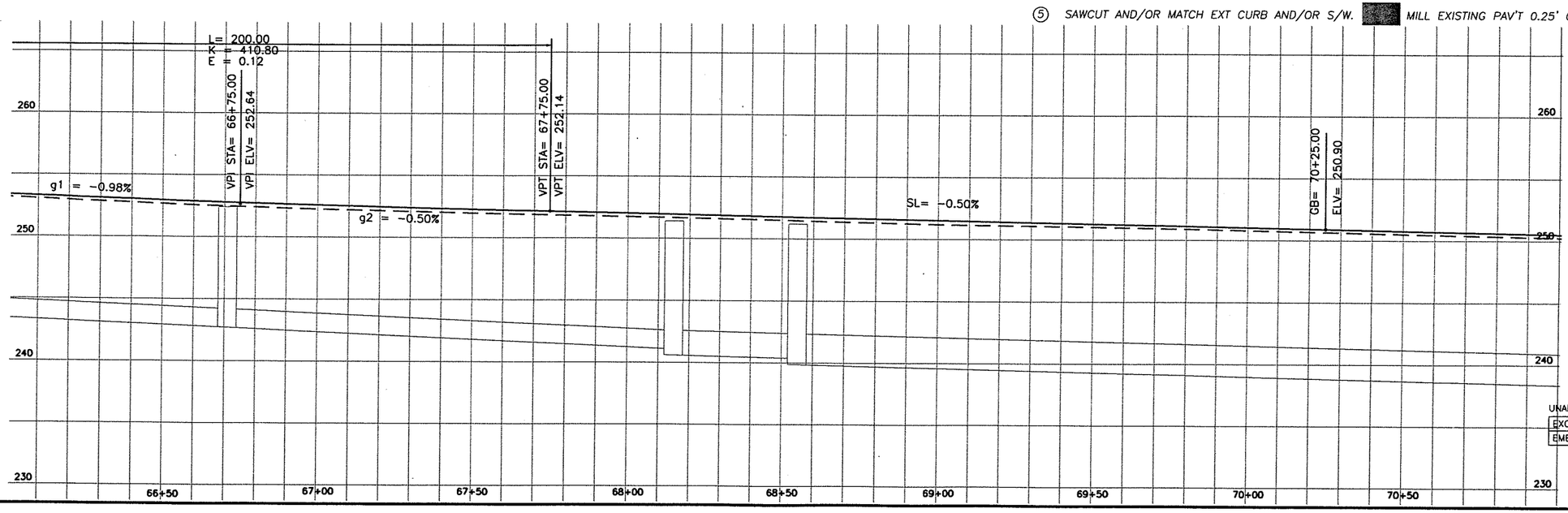

UNADJUSTED EARTHWORK QUANTITIES

EXCAVATION	1230
EMBANKMENT	2100

DESIGNED ME/JM
DRAWN KB/RK
CRP 301422
HOR. SEE SHEET
VERT. SEE SHEET
DATE 07/31/05
DWG: PP12
SHEET 54 OF 151

CALL 48 HOURS BEFORE YOU DIG 1-800-553-4344 "It's the Law" NORTHWEST UTILITIES NOTIFICATION CENTER

STATE OF WASHINGTON STACEY M. ERRICK 29000 REGISTERED PROFESSIONAL ENGINEER EXPIRES MAY 28, 2007

ENGINEERING PROGRAM
DESIGN SECTION

ST JOHNS ROAD (NE 50TH AVE TO NE 72ND AVE)
PLAN & PROFILE ST. JOHNS (STA 81+00 TO 86+00)

proud past, promising future
CLARK COUNTY WASHINGTON

n:\CIP\PROJECTS\301422-STJohns-50thTo72nd\DESIGN\DWGS\PP12.dwg, 7/27/2005 3:14:09 PM, kerlinr

1. RELOCATE/REMOVE BY OTHERS
2. ADJUST MH RIM/CB GRATE TO FG
3. ADJUST VALVE COVER/METER BOX TO FG
4. REMOVE EXT CULVERT/DRAINAGE STRUCTURE
5. SAWCUT AND/OR MATCH EXT CURB AND/OR S/W.
6. SAWCUT EXISTING PAV'T.
7. RELOCATE CLEANOUT BEHIND ROW

REMOVE EXT RDWY STRUCTURE TO LIMITS SHOWN. REPLACE PER TYPICAL SECTIONS, AND PLAN LAYOUT.

MILL EXISTING PAV'T 0.25' OVERLAY TO MATCH

SCALE IN FEET: 20 0 20 40

SCHIESS SER #199288-000

FOLDEN SER #199079-000

SEE DWG PP12 MATCH LINE STA 71+00

MATCH LINE STA 76+00 SEE DWG PP14

STA 72+90.46, 50' LT
BEGIN NEW 6' CHAIN LINK FENCE TYPE 1

DETACH SIDEWALK
PC 72+79.23, 41.5' LT
PRC 72+87.03, 44' LT
PT 72+96.00, 47' LT

ATTACH SIDEWALK
PC 71+86.00, 47' LT
PRC 71+94.66, 44.3' LT
PT 72+03.31, 41.5' LT

STA 74+39.02, 50' LT
END NEW 6' CHAIN LINK FENCE TYPE 1

STA 75+02
CONST 40' ASPH DWY MATCH 50' RT

STA 75+22.19, 50' LT
BEGIN NEW 6' CHAIN LINK FENCE TYPE 1

REMOVE 250 LF
EXISTING 6' CHAIN LINK FENCE

REMOVE 149 LF
6' CHAIN LINK FENCE

ST JOHNS RD

N 50° 32' 56" E

42' TO PROP GAS LINE

R=15'

6'

29'

35'

DETACH SIDEWALK
PC 71+76.96, 41.5' RT
PRC 71+85.62, 44.3' RT
PT 71+94.28, 47' RT

ATTACH SIDEWALK
PC 73+22.91, 47' RT
PRC 73+31.57, 44.3' RT
PT 73+40.22, 41.5' RT

DETACH SIDEWALK
PC 74+17.91, 41.5' RT
PRC 74+26.57,44.3' RT
PT 74+35.18, 47' RT

STA 75+32 CONST 15' ASPH DWY MATCH 57' RT

STA 75+50
MAILBOX SUPPORT TYPE 2

STA 75+85.89, 50' RT
BEGIN NEW 6' CHAIN LINK FENCE W/PRIVACY SLATS

DEMARAY SER #199090-000

VISSER SER #199102-000

SCHILKE SER #199141-000

PRELIMINARY

*OFFSET TO FACE OF WALL

SL= -0.52%

250 240 230 220

+00 71+50 72+00 72+50 73+00 73+50 74+00 74+50 75+00 75+50 76

UNADJUSTED EARTHWORK QUANTITIES

EXCAVATION	1320
EMBANKMENT	1570

DESIGNED	ME/JM
DRAWN	KB/RK
CRP	301422
HOR.	SEE SHEET
VERT.	SEE SHEET
DATE	07/31/05
DWG:	PP13
SHEET	55 OF 151

CALL 48 HOURS BEFORE YOU DIG 1-800-553-4344 "It's the Law" NORTHWEST UTILITIES NOTIFICATION CENTER

MICHAEL M. KURICK STATE OF WASHINGTON 29930 PROFESSIONAL ENGINEER EXPIRES: MAY 26, 2007

ENGINEERING PROGRAM
DESIGN SECTION

ST JOHNS ROAD (NE 50TH AVE TO NE 72ND AVE)
PLAN & PROFILE ST. JOHNS (STA 86+00 TO 91+00)

proud past, promising future
CLARK COUNTY WASHINGTON

n:\CIP\PROJECTS\301422-STJohns-50thTo72nd\DESIGN\DWGS\PP13.dwg, 7/27/2005 3:14:44 PM, kerlinr

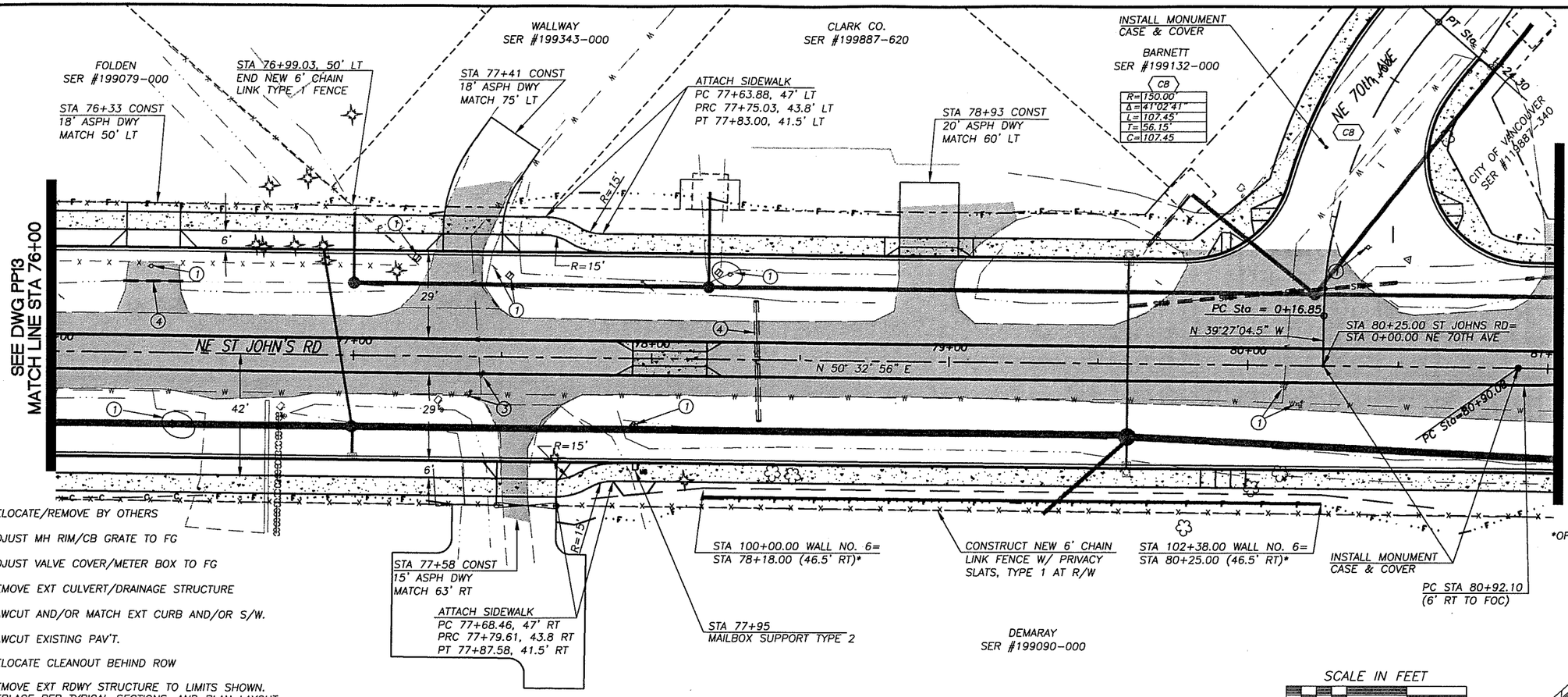

1. RELOCATE/REMOVE BY OTHERS
2. ADJUST MH RIM/CB GRATE TO FG
3. ADJUST VALVE COVER/METER BOX TO FG
4. REMOVE EXT CULVERT/DRAINAGE STRUCTURE
5. SAWCUT AND/OR MATCH EXT CURB AND/OR S/W.
6. SAWCUT EXISTING PAV'T.
7. RELOCATE CLEANOUT BEHIND ROW

REMOVE EXT RDWY STRUCTURE TO LIMITS SHOWN. REPLACE PER TYPICAL SECTIONS, AND PLAN LAYOUT.

MILL EXISTING PAV'T 0.25' OVERLAY TO MATCH

PRELIMINARY

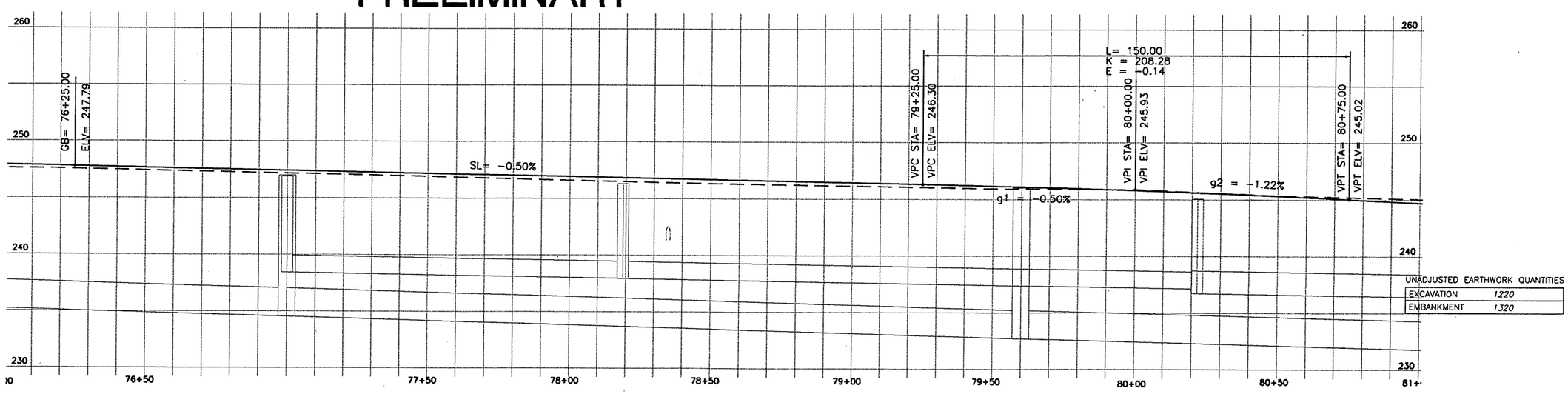

UNADJUSTED EARTHWORK QUANTITIES

EXCAVATION	1220
EMBANKMENT	1320

DESIGNED ME/JM
DRAWN KB/RK
CRP 301422
HOR. SEE SHEET
VERT. SEE SHEET
DATE 07/31/05
DWG: PP14
SHEET 56 OF 151

CALL 48 HOURS BEFORE YOU DIG
1-800-553-4344
"It's the Law"
NORTHWEST UTILITIES NOTIFICATION CENTER

STATE OF WASHINGTON
MICHAEL W. ERRICK
22080
REGISTERED PROFESSIONAL ENGINEER
EXPIRES: MAY 26, 2007

ENGINEERING PROGRAM
DESIGN SECTION

ST JOHNS ROAD (NE 50TH AVE TO NE 72ND AVE)
PLAN & PROFILE ST. JOHNS (STA 91+00 TO 96+00)

proud past, promising future
CLARK COUNTY
WASHINGTON

n:\CIP\PROJECTS\301422-STJohns-50thTo72nd\DESIGN\DWGS\PP14.dwg, 7/27/2005 3:15:22 PM, kerlinr

PRELIMINARY

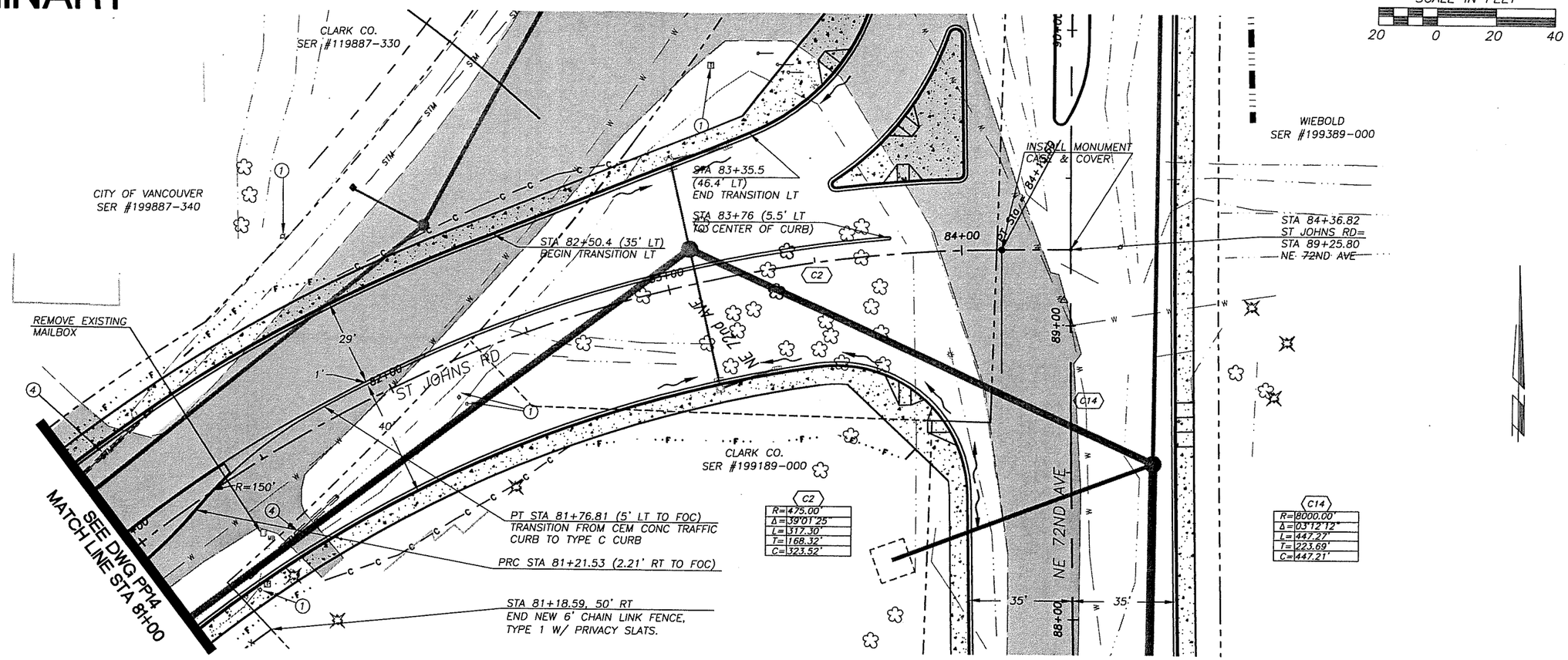

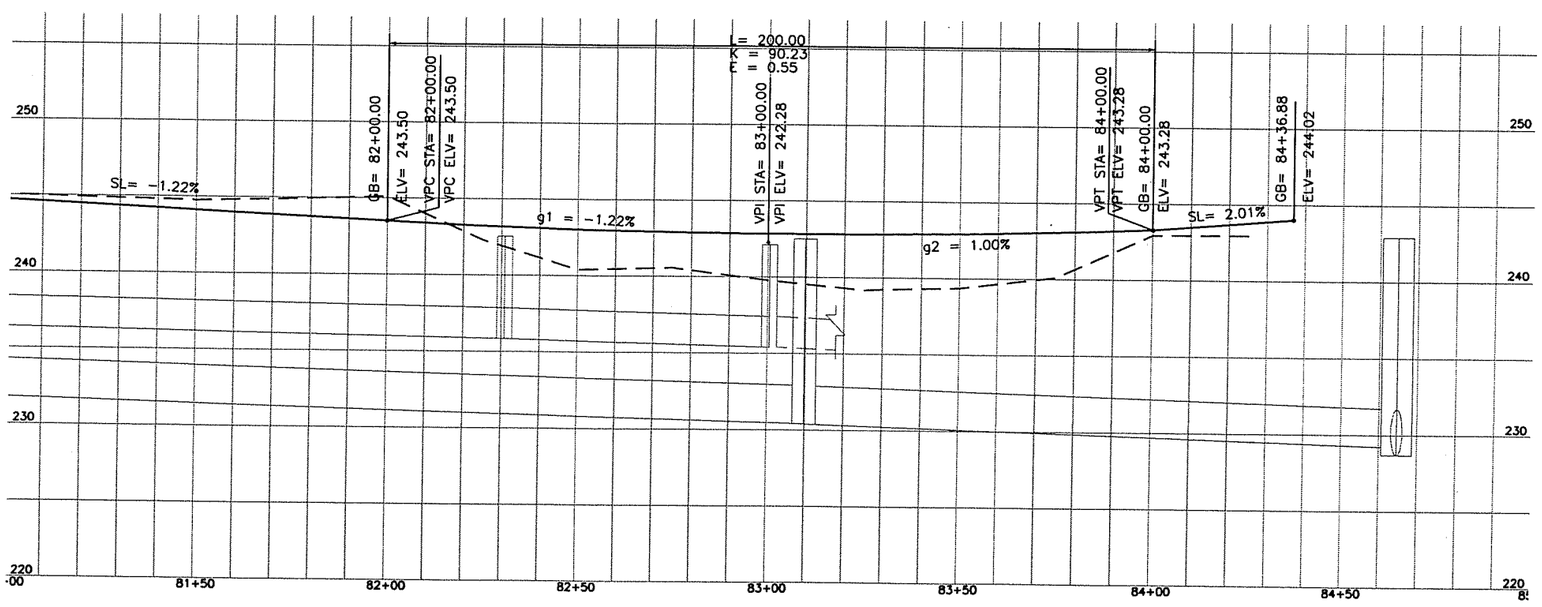

1. RELOCATE/REMOVE BY OTHERS
2. ADJUST MH RIM/CB GRATE TO FG
3. ADJUST VALVE COVER/METER BOX TO FG
4. REMOVE EXT CULVERT/DRAINAGE STRUCTURE
5. SAWCUT AND/OR MATCH EXT CURB AND/OR S/W.
6. SAWCUT EXISTING PAV'T.
7. RELOCATE CLEANOUT BEHIND ROW

REMOVE EXT RDWY STRUCTURE TO LIMITS SHOWN. REPLACE PER TYPICAL SECTIONS, AND PLAN LAYOUT.

MILL EXISTING PAV'T 0.25' OVERLAY TO MATCH

UNADJUSTED EARTHWORK QUANTITIES

EXCAVATION	1240
EMBANKMENT	750

DESIGNED	ME/JM
DRAWN	KB/RK
CRP	301422
HOR.	SEE SHEET
VERT.	SEE SHEET
DATE	07/31/05
DWG:	PP15
SHEET	57 OF 151

CALL 48 HOURS BEFORE YOU DIG 1-800-553-4344 "It's the Law" NORTHWEST UTILITIES NOTIFICATION CENTER

STATE OF WASHINGTON MICHAEL M. KERRICK 29030 REGISTERED PROFESSIONAL ENGINEER EXPIRES: MAY 28, 2007

ENGINEERING PROGRAM
DESIGN SECTION

ST JOHNS ROAD (NE 50TH AVE TO NE 72ND AVE)
PLAN & PROFILE ST. JOHNS (STA 96+00 TO 101+00)

proud past, promising future
CLARK COUNTY WASHINGTON

n:\CIP\PROJECTS\301422-STJohns-50thTo72nd\DESIGN\DWGS\PP15.dwg, 7/27/2005 3:16:00 PM, kerlinr

1. RELOCATE/REMOVE BY OTHERS
2. ADJUST MH RIM/CB GRATE TO FG
3. ADJUST VALVE COVER/METER BOX TO FG
4. REMOVE EXT CULVERT/DRAINAGE STRUCTURE
5. SAWCUT AND/OR MATCH EXT CURB AND/OR S/W.
6. SAWCUT EXISTING PAV'T.
7. RELOCATE CLEANOUT BEHIND ROW

REMOVE EXT RDWY STRUCTURE TO LIMITS SHOWN. REPLACE PER TYPICAL SECTIONS, AND PLAN LAYOUT.

MILL EXISTING PAV'T 0.25' OVERLAY TO MATCH

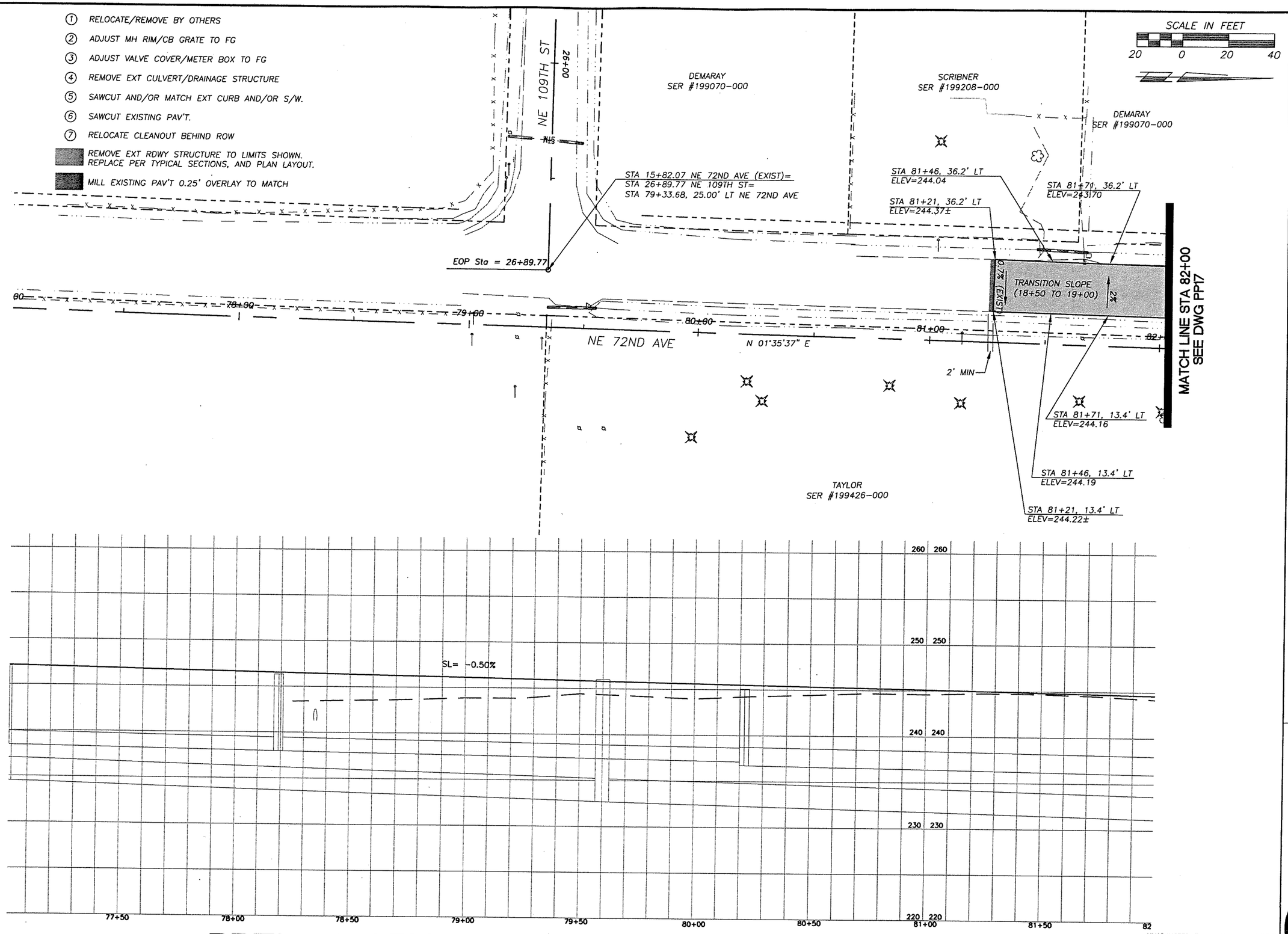

PRELIMINARY

UNADJUSTED EARTHWORK QUANTITIES

EXCAVATION	240
EMBANKMENT	50

DESIGNED ME/JM
DRAWN KB/RK
CRP 301422
HOR. SEE SHEET
VERT. SEE SHEET
DATE 07/31/05
DWG: PP16
SHEET 58 OF 151

CALL 48 HOURS BEFORE YOU DIG 1-800-553-4344 "It's the Law" NORTHWEST UTILITIES NOTIFICATION CENTER

MICHAEL L. EMICK STATE OF WASHINGTON 19980 REGISTERED PROFESSIONAL ENGINEER
EXPIRES MAY 28, 2007

ENGINEERING PROGRAM
DESIGN SECTION

ST JOHNS ROAD (NE 50TH AVE TO NE 72ND AVE)
PLAN & PROFILE 72ND AVE (STA 77+00 TO 82+00)

proud past, promising future
CLARK COUNTY WASHINGTON

n:\CIP\PROJECTS\301422-STJohns-50thTo72nd\DESIGN\DWGS\PP16.dwg, 7/27/2005 3:16:36 PM, kerlinr

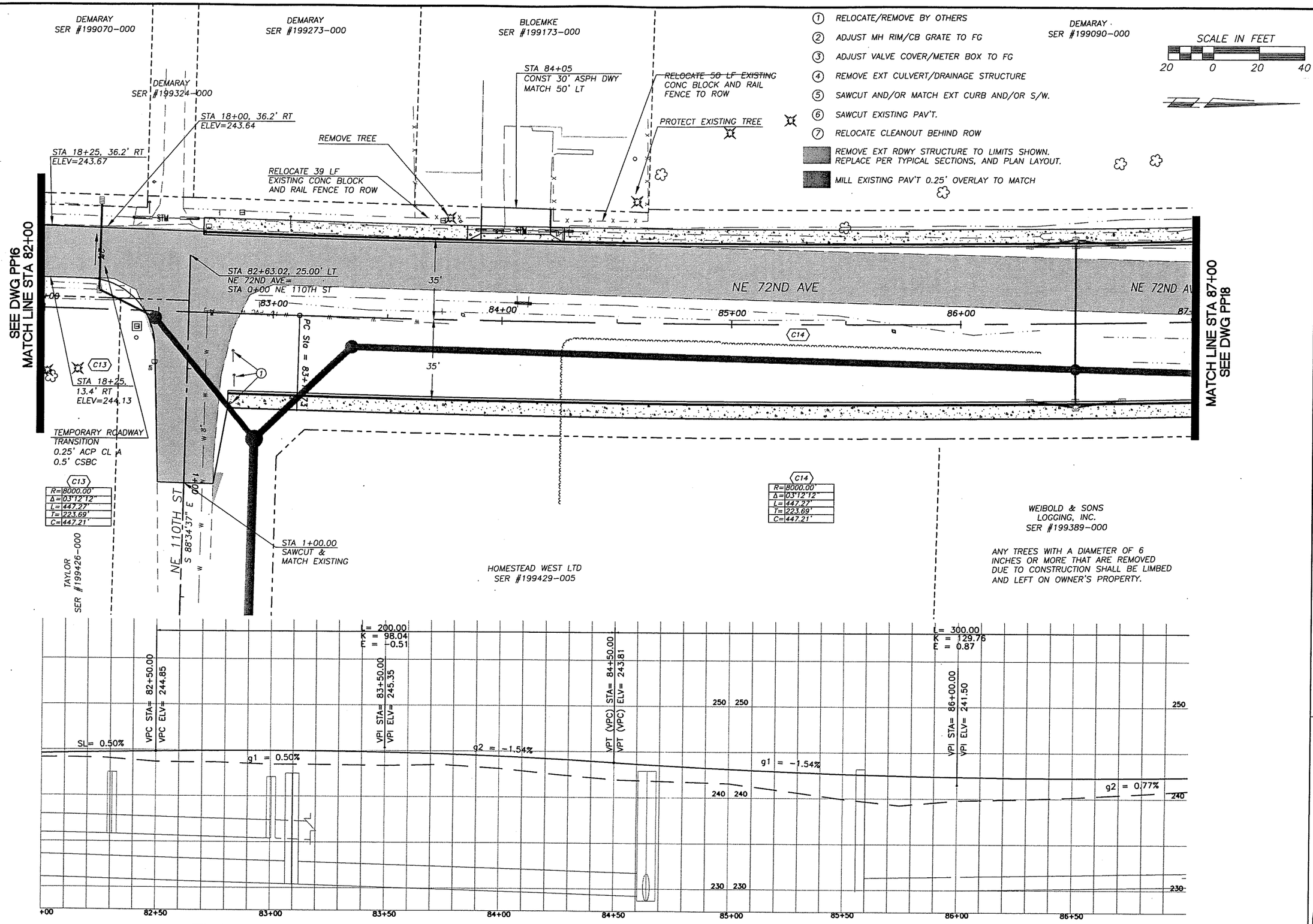

PRELIMINARY

UNADJUSTED EARTHWORK QUANTITIES

EXCAVATION	1130
EMBANKMENT	1290

DESIGNED ME/JM
DRAWN KB/RK
CRP 301422
HOR. SEE SHEET
VERT. SEE SHEET
DATE 07/31/05
DWG: PP17
SHEET 59 OF 151

CALL 48 HOURS BEFORE YOU DIG 1-800-553-4344 "It's the Law" NORTHWEST UTILITIES NOTIFICATION CENTER

ENGINEERING PROGRAM
DESIGN SECTION

ST JOHNS ROAD (NE 50TH AVE TO NE 72ND AVE)
PLAN & PROFILE 72ND AVE (STA 82+00 TO 87+00)

proud past, promising future
CLARK COUNTY WASHINGTON

n:\CIP\PROJECTS\301422-ST1ohns-50thTo72nd\DESIGN\DWGS\PP17.dwg, 7/27/2005 3:17:10 PM, kerlinr

PRELIMINARY

1. RELOCATE/REMOVE BY OTHERS
2. ADJUST MH RIM/CB GRATE TO FG
3. ADJUST VALVE COVER/METER BOX TO FG
4. REMOVE EXT CULVERT/DRAINAGE STRUCTURE
5. SAWCUT AND/OR MATCH EXT CURB AND/OR S/W.
6. SAWCUT EXISTING PAV'T.
7. RELOCATE CLEANOUT BEHIND ROW

REMOVE EXT RDWY STRUCTURE TO LIMITS SHOWN. REPLACE PER TYPICAL SECTIONS, AND PLAN LAYOUT.

MILL EXISTING PAV'T 0.25' OVERLAY TO MATCH

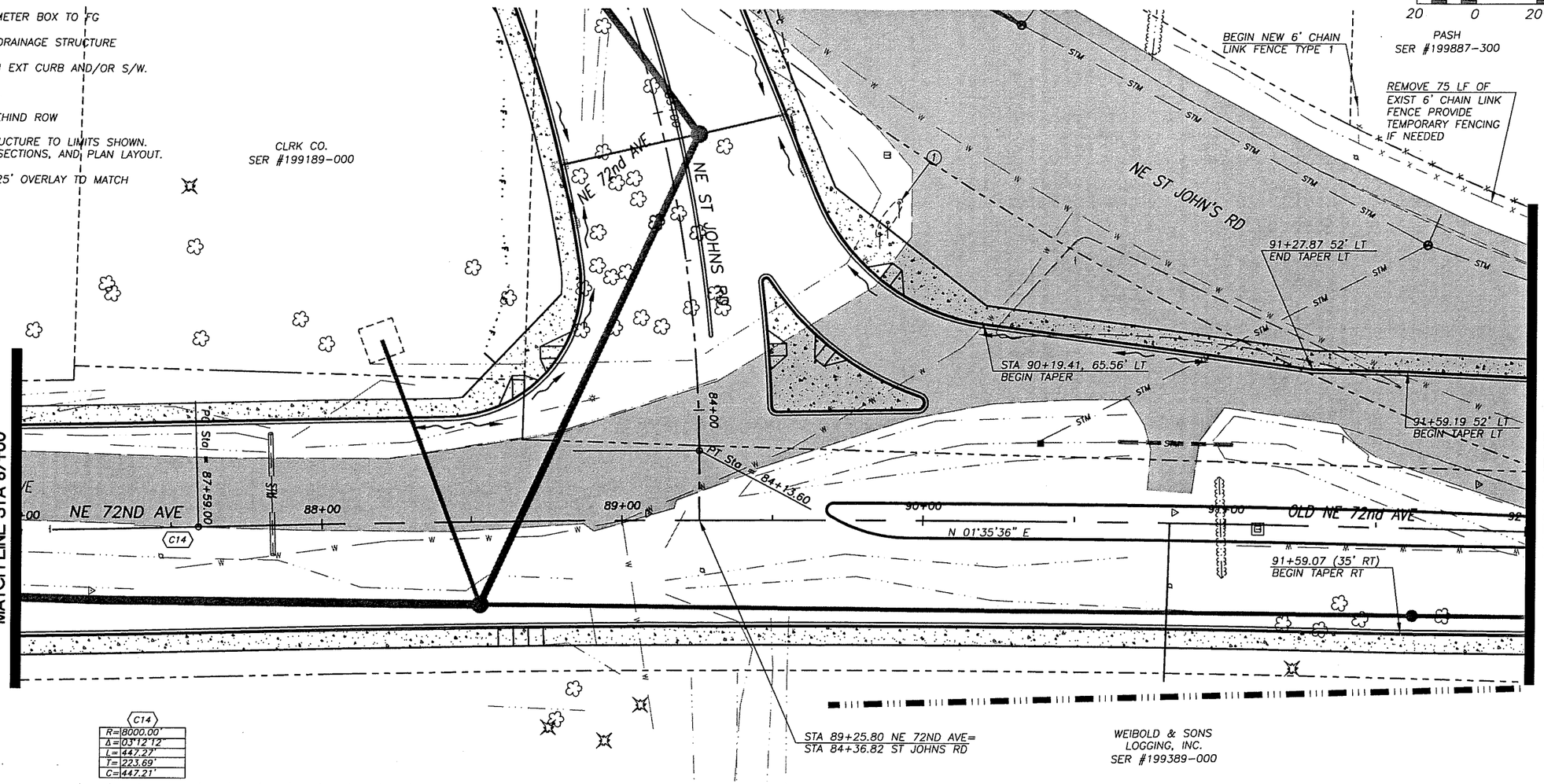

C14	
R=	8000.00'
Δ=	03°12'12"
L=	447.27'
T=	223.69'
C=	447.21'

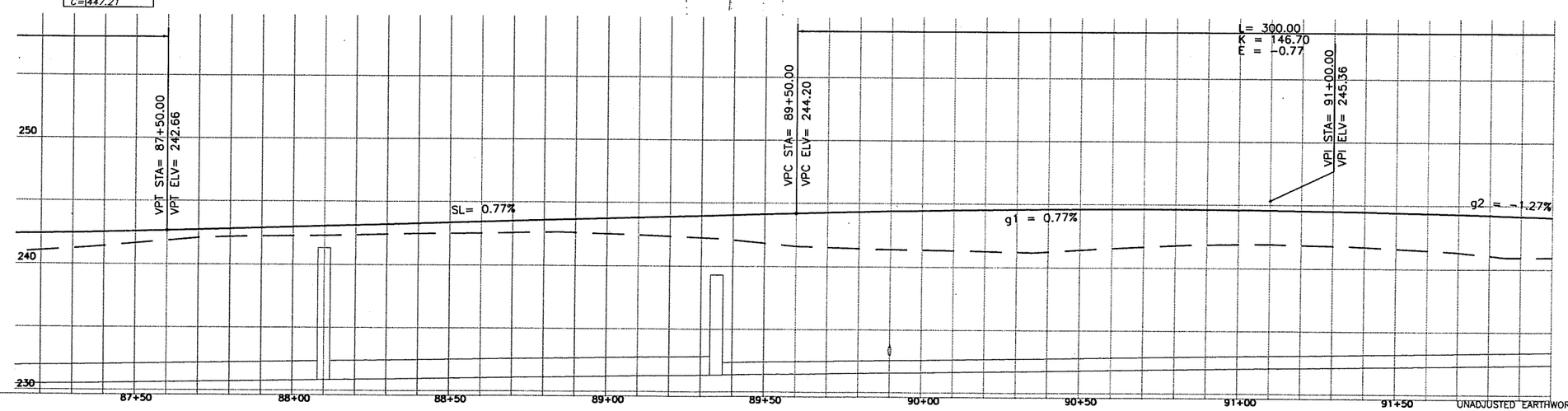

UNADJUSTED EARTHWORK QUANTITIES

EXCAVATION	550
EMBANKMENT	3090

DESIGNED	ME/JM
DRAWN	KB/RK
CRP	301422
HOR.	SEE SHEET
VERT.	SEE SHEET
DATE	07/31/05
DWG:	PP18
SHEET	60 OF 151

CALL 48 HOURS BEFORE YOU DIG 1-800-553-4344 "It's the Law" NORTHWEST UTILITIES NOTIFICATION CENTER

MICHAEL M. EMBRICK STATE OF WASHINGTON 20002 REGISTERED PROFESSIONAL ENGINEER EXPIRES MAR 28, 2007

ENGINEERING PROGRAM
DESIGN SECTION

ST JOHNS ROAD (NE 50TH AVE TO NE 72ND AVE)
PLAN & PROFILE 72ND AVE (STA 87+00 TO 92+00)

proud past, promising future

CLARK COUNTY WASHINGTON

n:\CIP\PROJECTS\301422-STJohns-50thTo72nd\DESIGN\DWGS\PP18.dwg, 7/27/2005 3:17:40 PM, kerinr

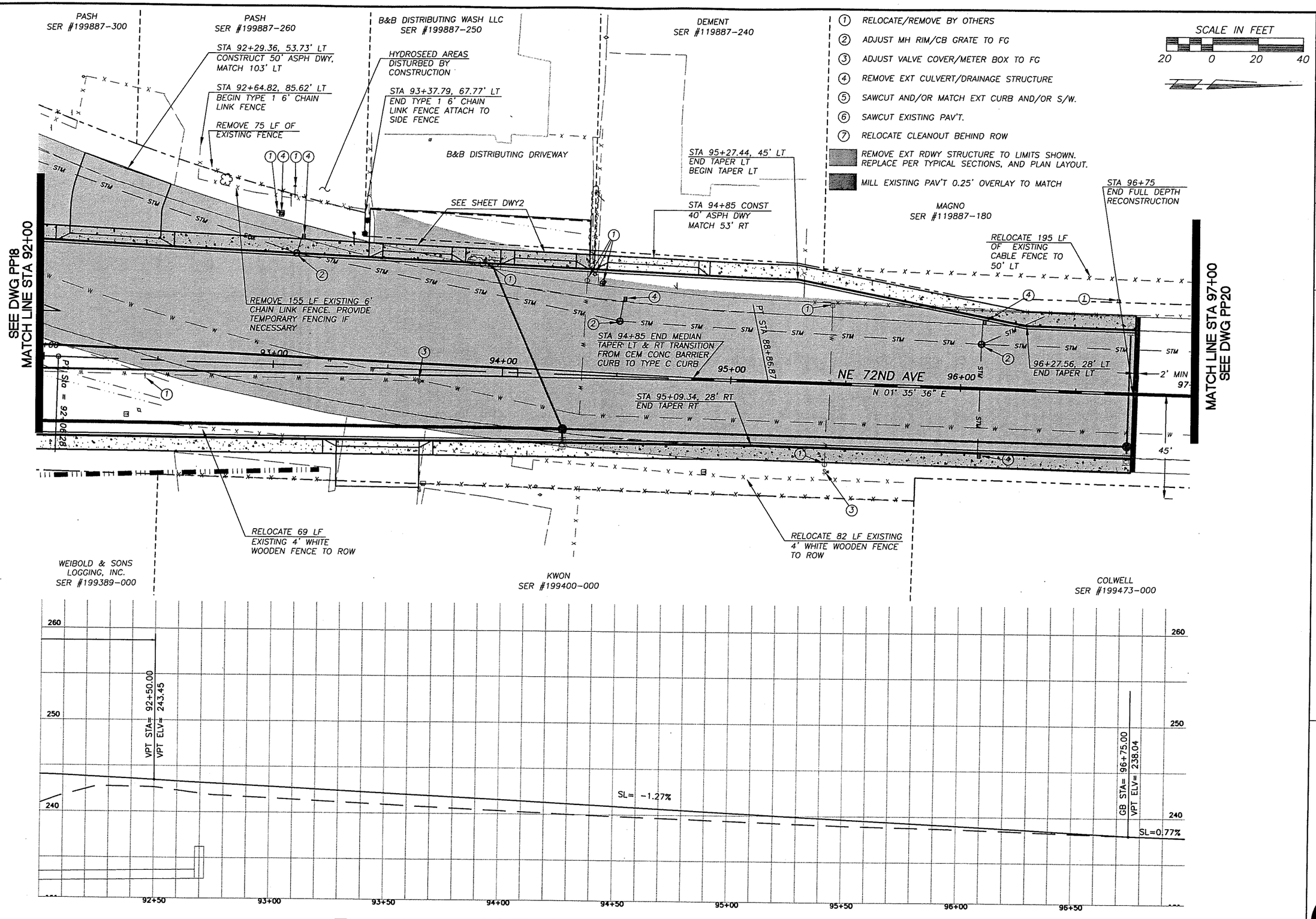

PRELIMINARY

UNADJUSTED EARTHWORK QUANTITIES

EXCAVATION	1,230
EMBANKMENT	250

DESIGNED ME/JM
DRAWN KB/RK
CRP 301422
HOR. SEE SHEET
VERT. SEE SHEET
DATE 07/31/05
DWG: PP19
SHEET 61 OF 151

CALL 48 HOURS BEFORE YOU DIG
1-800-553-4344
"It's the Law"
NORTHWEST UTILITIES NOTIFICATION CENTER

STATE OF WASHINGTON
MICHAEL M. EMRICK
PROFESSIONAL ENGINEER
EXPIRES MAR 29, 2006

ENGINEERING PROGRAM
DESIGN SECTION

ST JOHNS ROAD (NE 50TH AVE TO NE 72ND AVE)
PLAN & PROFILE 72ND AVE (STA 92+00 TO 97+00)

proud past, promising future
CLARK COUNTY
WASHINGTON

n:\CP\PROJECTS\301422-STJohns-50thTo72nd\DESIGN\DWGS\PP19.dwg, 7/27/2005 3:18:11 PM, kerlinr

PRELIMINARY

1. RELOCATE/REMOVE BY OTHERS
2. ADJUST MH RIM/CB GRATE TO FG
3. ADJUST VALVE COVER/METER BOX TO FG
4. REMOVE EXT CULVERT/DRAINAGE STRUCTURE
5. SAWCUT AND/OR MATCH EXT CURB AND/OR S/W.
6. SAWCUT EXISTING PAV'T.
7. RELOCATE CLEANOUT BEHIND ROW

REMOVE EXT RDWY STRUCTURE TO LIMITS SHOWN. REPLACE PER TYPICAL SECTIONS, AND PLAN LAYOUT.

MILL EXISTING PAV'T 0.25' OVERLAY TO MATCH

SCALE IN FEET

20 0 20 40

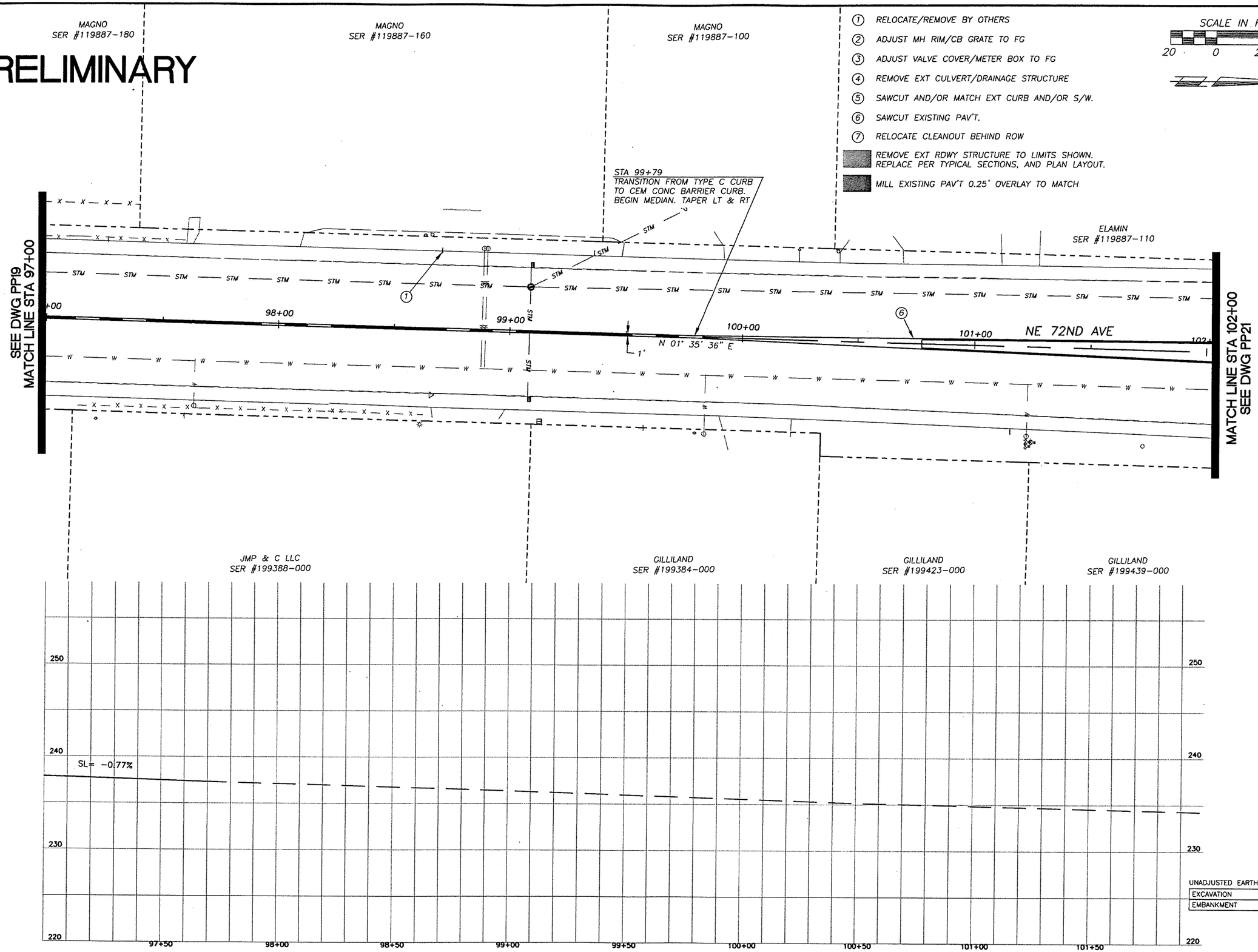

UNADJUSTED EARTHWORK QUANTITIES

EXCAVATION	0
EMBANKMENT	0

DESIGNED	ME/JM
DRAWN	KB/RK
CRP	301422
HOR.	SEE SHEET
VERT.	SEE SHEET
DATE	07/31/05
DWG:	PP20
SHEET	62 OF 151

CALL 48 HOURS BEFORE YOU DIG 1-800-553-4344 "It's the Law" NORTHWEST UTILITIES NOTIFICATION CENTER

MICHAEL M. ERICK STATE OF WASHINGTON REGISTERED PROFESSIONAL ENGINEER EXPIRES JULY 26, 2007

ENGINEERING PROGRAM
DESIGN SECTION

ST JOHNS ROAD (NE 50TH AVE TO NE 72ND AVE)
PLAN & PROFILE 72ND AVE (STA 97+00 TO 102+00)

proud past, promising future

CLARK COUNTY
WASHINGTON

n:\CIP\PROJECTS\301422-STJohns-50thTo72nd\DESIGN\DWGS\PP20.dwg, 7/27/2005 3:18:45 PM, kerlinr

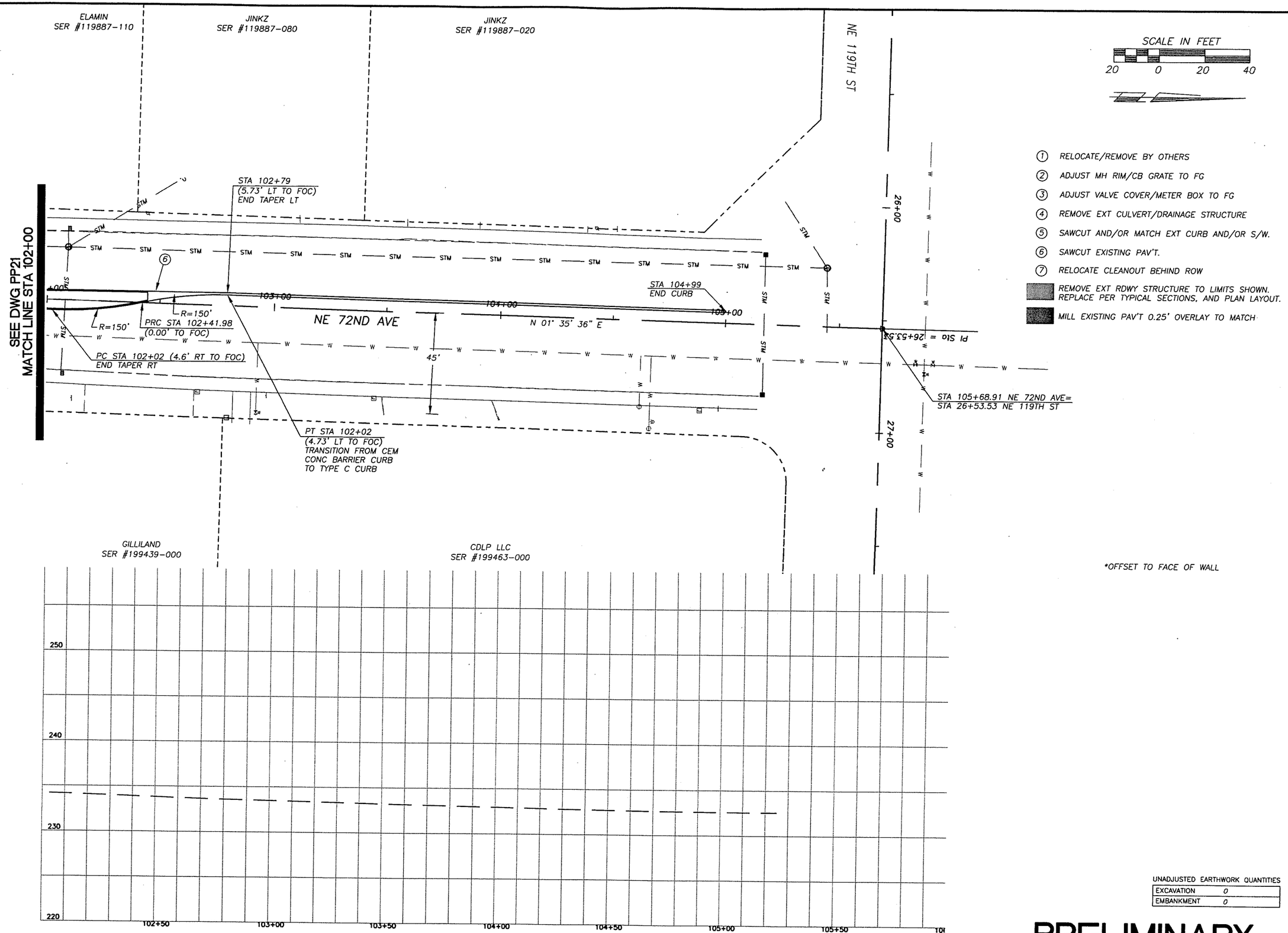

1. RELOCATE/REMOVE BY OTHERS
2. ADJUST MH RIM/CB GRATE TO FG
3. ADJUST VALVE COVER/METER BOX TO FG
4. REMOVE EXT CULVERT/DRAINAGE STRUCTURE
5. SAWCUT AND/OR MATCH EXT CURB AND/OR S/W.
6. SAWCUT EXISTING PAV'T.
7. RELOCATE CLEANOUT BEHIND ROW

REMOVE EXT RDWY STRUCTURE TO LIMITS SHOWN. REPLACE PER TYPICAL SECTIONS, AND PLAN LAYOUT.

MILL EXISTING PAV'T 0.25' OVERLAY TO MATCH

UNADJUSTED EARTHWORK QUANTITIES

EXCAVATION	0
EMBANKMENT	0

PRELIMINARY

DESIGNED	ME/JM
DRAWN	KB/RK
CRP	301422
HOR.	SEE SHEET
VERT.	SEE SHEET
DATE	07/31/05
DWG:	PP21
SHEET	63 OF 151

CALL 48 HOURS BEFORE YOU DIG
1-800-553-4344
"It's the Law"
NORTHWEST UTILITIES NOTIFICATION CENTER

MICHAEL M. EMRICK
STATE OF WASHINGTON
PROFESSIONAL ENGINEER
EXPIRES: JULY 26, 2007

ENGINEERING PROGRAM
DESIGN SECTION

ST JOHNS ROAD (NE 50TH AVE TO NE 72ND AVE)
PLAN & PROFILE 72ND AVE (STA 102+00 TO E.O.P.)

proud past, promising future
CLARK COUNTY
WASHINGTON

n:\CIP\PROJECTS\301422-STJohns-50thTo72nd\DESIGN\DWGS\PP21.dwg, 7/27/2005 3:19:17 PM, kerlinr

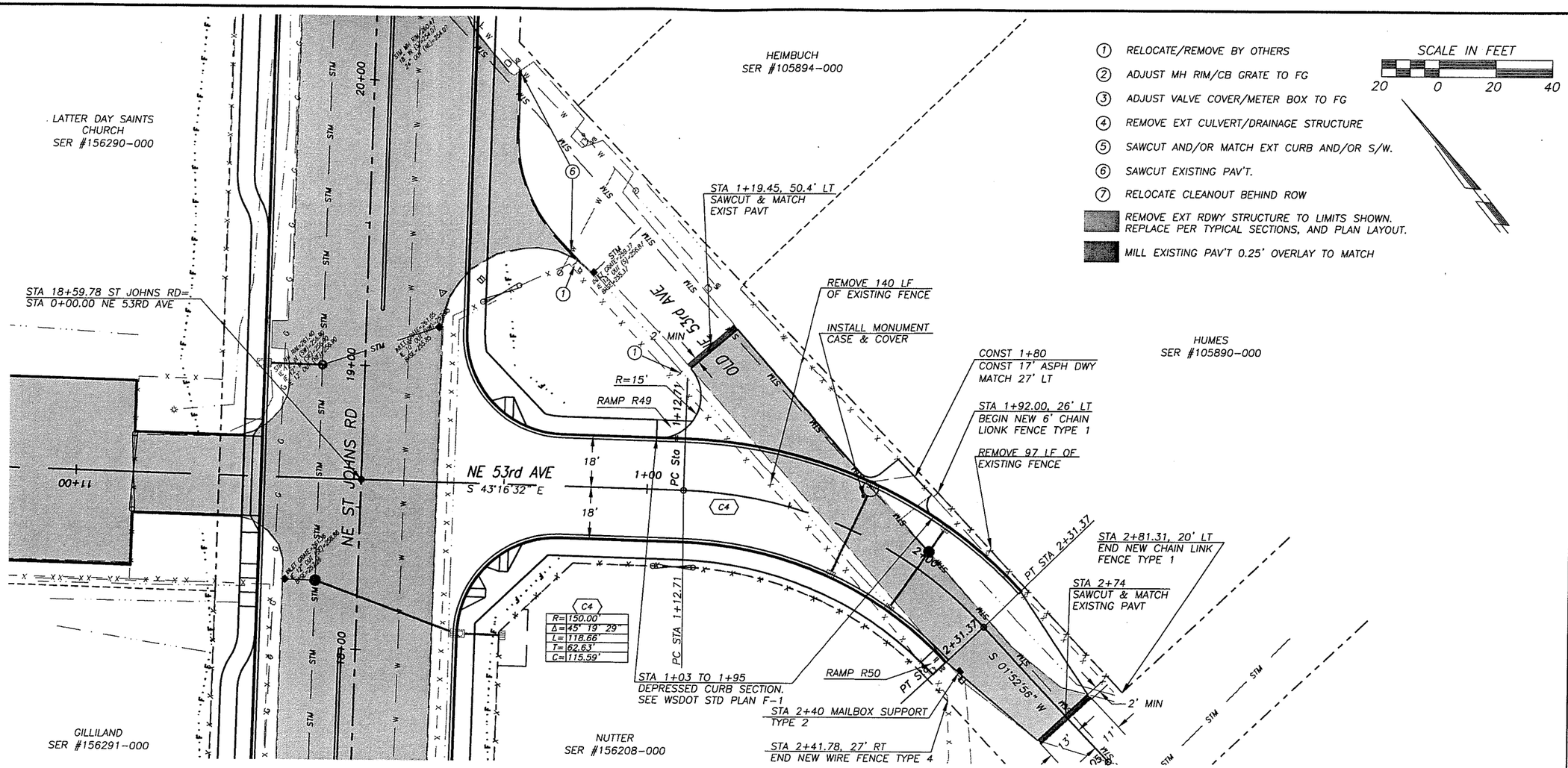

1. RELOCATE/REMOVE BY OTHERS
2. ADJUST MH RIM/CB GRATE TO FG
3. ADJUST VALVE COVER/METER BOX TO FG
4. REMOVE EXT CULVERT/DRAINAGE STRUCTURE
5. SAWCUT AND/OR MATCH EXT CURB AND/OR S/W.
6. SAWCUT EXISTING PAV'T.
7. RELOCATE CLEANOUT BEHIND ROW

REMOVE EXT RDWY STRUCTURE TO LIMITS SHOWN. REPLACE PER TYPICAL SECTIONS, AND PLAN LAYOUT.

MILL EXISTING PAV'T 0.25' OVERLAY TO MATCH

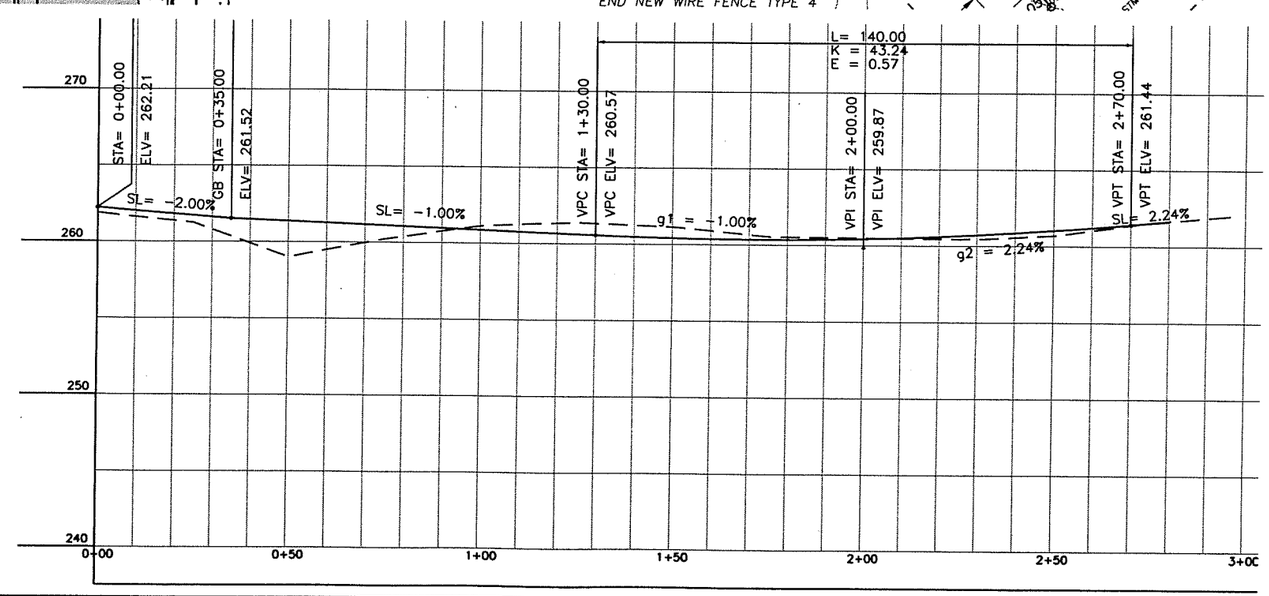

PRELIMINARY

UNADJUSTED EARTHWORK QUANTITIES

EXCAVATION	350
EMBANKMENT	20

DESIGNED	ME/JM
DRAWN	KB/RK
CRP.	301422
HOR.	SEE SHEET
VERT.	SEE SHEET
DATE	07/31/05
DWG:	PP22
SHEET	64 OF 151

CALL 48 HOURS BEFORE YOU DIG 1-800-553-4344 "It's the Law" NORTHWEST UTILITIES NOTIFICATION CENTER

MICHAEL M. ELDRICK STATE OF WASHINGTON 29535 REGISTERED PROFESSIONAL ENGINEER EXPIRES: MAY 26, 2007

ENGINEERING PROGRAM DESIGN SECTION

ST JOHNS ROAD (NE 50TH AVE TO NE 72ND AVE)
PLAN & PROFILE 53RD AVE (STA 0+00 TO 3+00)

proud past, promising future

CLARK COUNTY WASHINGTON

n:\CIP\PROJECTS\301422-STJohns-50thTo72nd\DESIGN\DWGS\PP22.dwg, 7/27/2005 3:19:49 PM, kerlinr

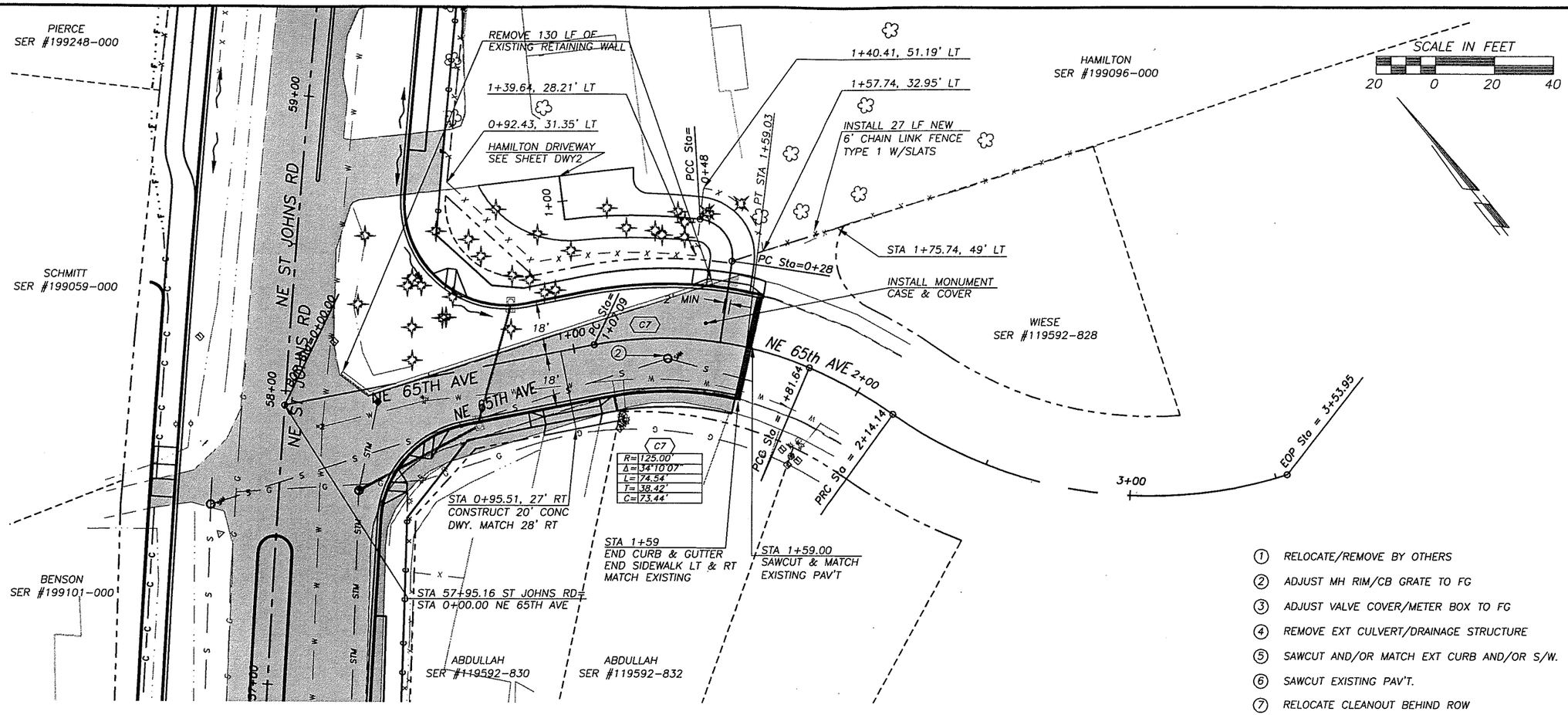

1. RELOCATE/REMOVE BY OTHERS
2. ADJUST MH RIM/CB GRATE TO FG
3. ADJUST VALVE COVER/METER BOX TO FG
4. REMOVE EXT CULVERT/DRAINAGE STRUCTURE
5. SAWCUT AND/OR MATCH EXT CURB AND/OR S/W.
6. SAWCUT EXISTING PAV'T.
7. RELOCATE CLEANOUT BEHIND ROW

REMOVE EXT RDWY STRUCTURE TO LIMITS SHOWN. REPLACE PER TYPICAL SECTIONS, AND PLAN LAYOUT.

MILL EXISTING PAV'T 0.25' OVERLAY TO MATCH

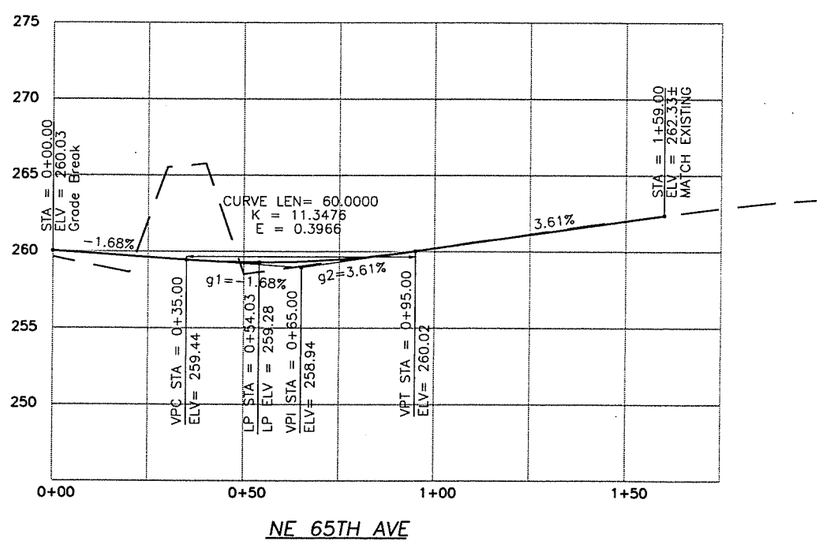

NE 65TH AVE

PRELIMINARY

UNADJUSTED EARTHWORK QUANTITIES

EXCAVATION	760
EMBANKMENT	10

DESIGNED	ME/JM
DRAWN	KB/RK
CRP	301422
HOR.	SEE SHEET
VERT.	SEE SHEET
DATE	07/31/05
DWG:	PP23
SHEET	65 OF 151

CALL 48 HOURS BEFORE YOU DIG 1-800-553-4344 "It's the Law" NORTHWEST UTILITIES NOTIFICATION CENTER

MICHAEL M. EMRICK STATE OF WASHINGTON 20020 PROFESSIONAL ENGINEER EXPIRES JAN 26, 2007

ENGINEERING PROGRAM
DESIGN SECTION

ST JOHNS ROAD (NE 50TH AVE TO NE 72ND AVE)
PLAN & PROFILE 65TH AVE (STA 0+00 TO 3+00)

proud past, promising future
CLARK COUNTY WASHINGTON

n:\CIP\PROJECTS\301422-STJohns-50thTo72nd\DESIGN\DWGS\PP23.dwg, 7/27/2005 3:20:19 PM, kerlinr

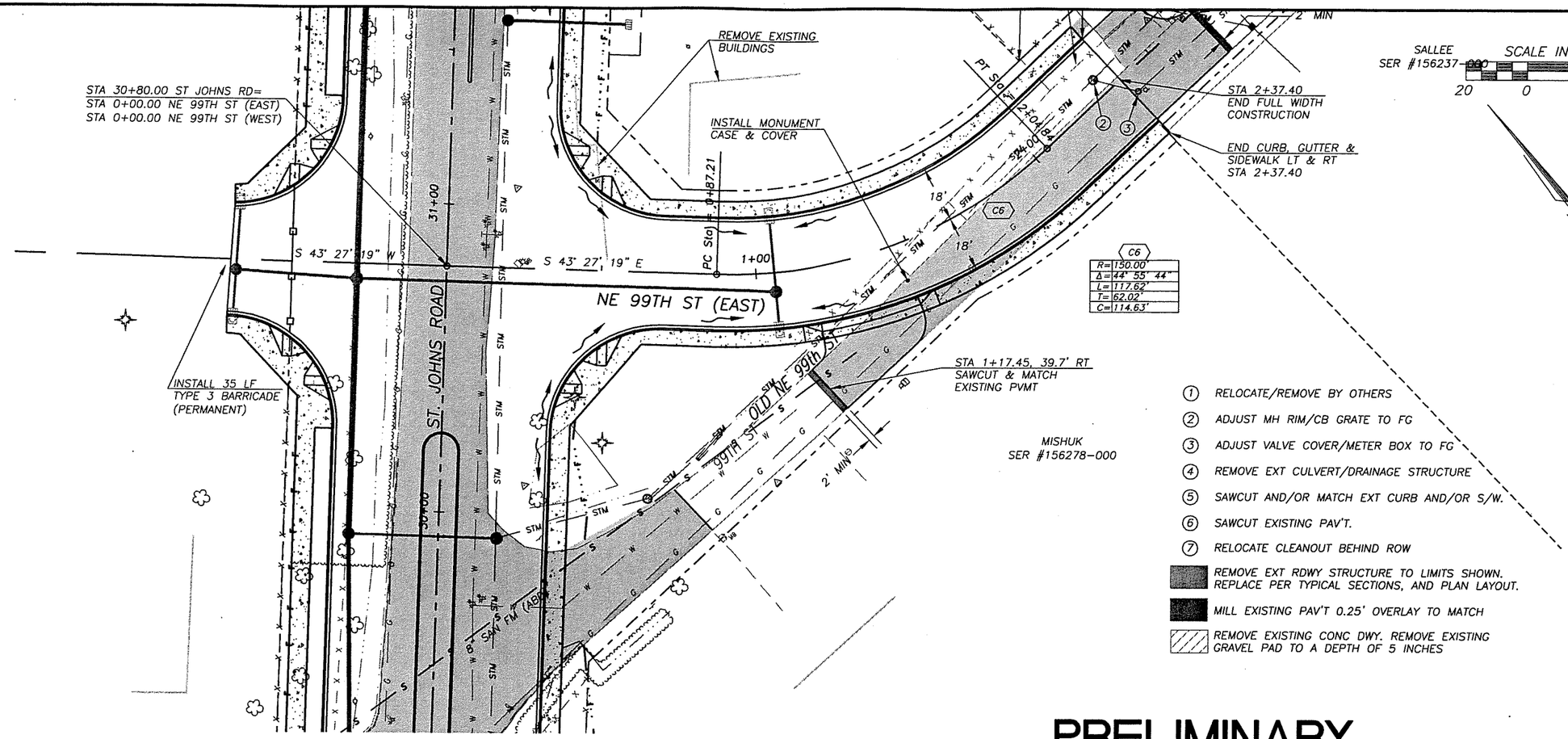

PRELIMINARY

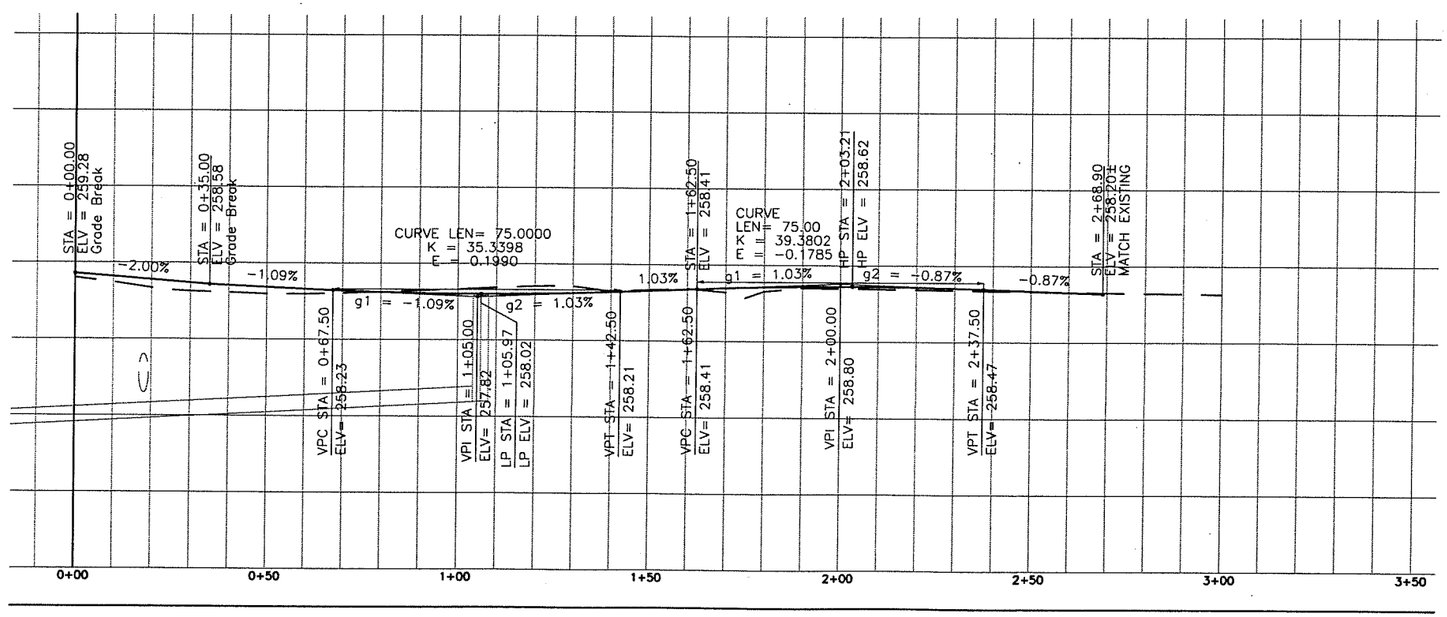

UNADJUSTED EARTHWORK QUANTITIES

EXCAVATION	300
EMBANKMENT	10

DESIGNED ME/JM
DRAWN KB/RK
CRP 301422
HOR. SEE SHEET
VERT. SEE SHEET
DATE 07/31/05
DWG: PP24
SHEET 66 OF 151

CALL 48 HOURS BEFORE YOU DIG
1-800-553-4344
"It's the Law"
NORTHWEST UTILITIES NOTIFICATION CENTER

MICHAEL W. LEMICK
STATE OF WASHINGTON
20930
REGISTERED PROFESSIONAL ENGINEER
EXPIRES: MAY 28, 2002

ENGINEERING PROGRAM
DESIGN SECTION

ST JOHNS ROAD (NE 50TH AVE TO NE 72ND AVE)
PLAN & PROFILE 99TH ST (STA 0+00 TO 3+00)

proud past, promising future
CLARK COUNTY
WASHINGTON

n:\CIP\PROJECTS\301422-STJohns-50thTo72nd\DESIGN\DWGS\PP24.dwg, 7/27/2005 3:20:52 PM, kerlinr

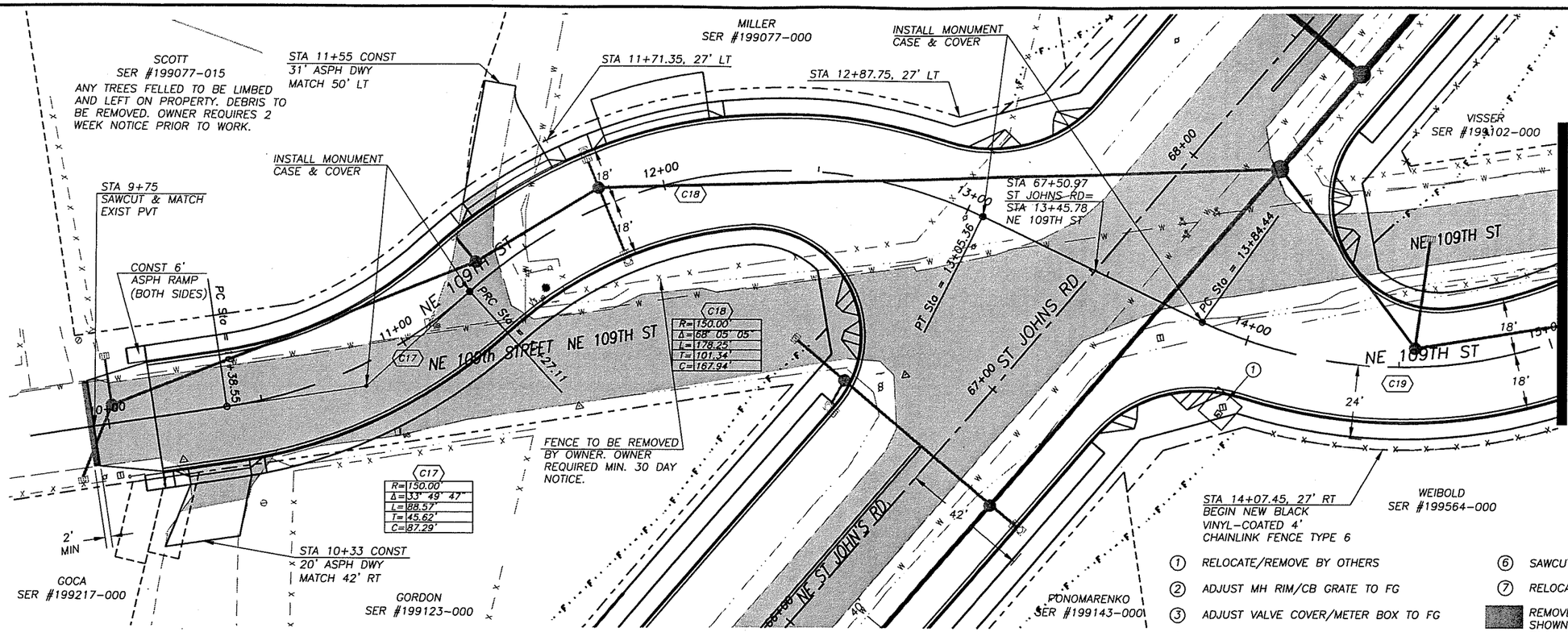

1. RELOCATE/REMOVE BY OTHERS
2. ADJUST MH RIM/CB GRATE TO FG
3. ADJUST VALVE COVER/METER BOX TO FG
4. REMOVE EXT CULVERT/DRAINAGE STRUCTURE
5. SAWCUT AND/OR MATCH EXT CURB AND/OR S/W.
6. SAWCUT EXISTING PAV'T.
7. RELOCATE CLEANOUT BEHIND ROW

REMOVE EXT RDWY STRUCTURE TO LIMITS SHOWN. REPLACE PER TYPICAL SECTIONS, AND PLAN LAYOUT.

MILL EXISTING PAV'T 0.25' OVERLAY TO MATCH

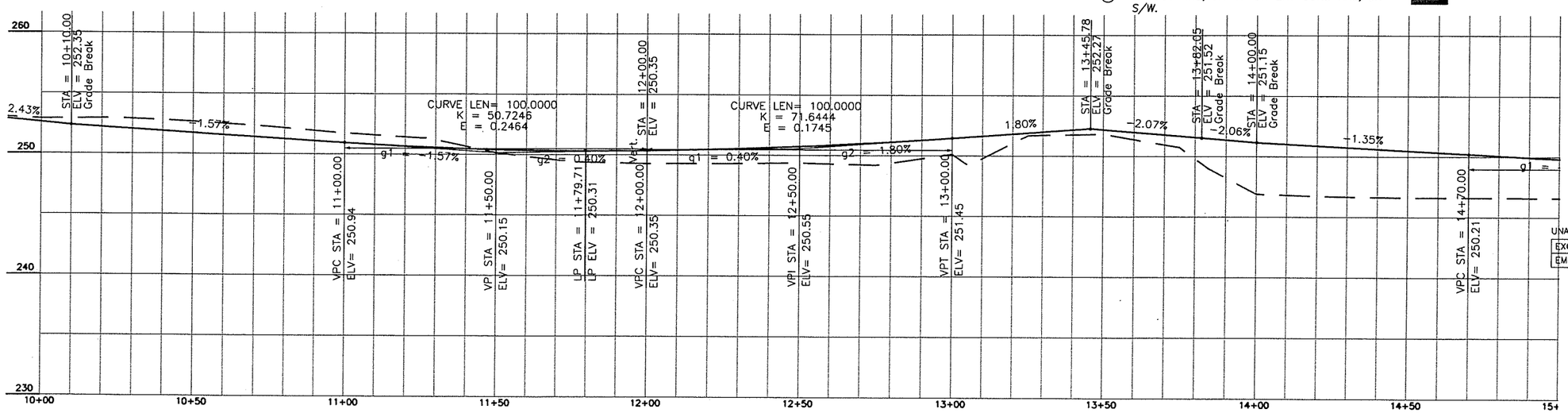

UNADJUSTED EARTHWORK QUANTITIES

EXCAVATION	410
EMBANKMENT	755

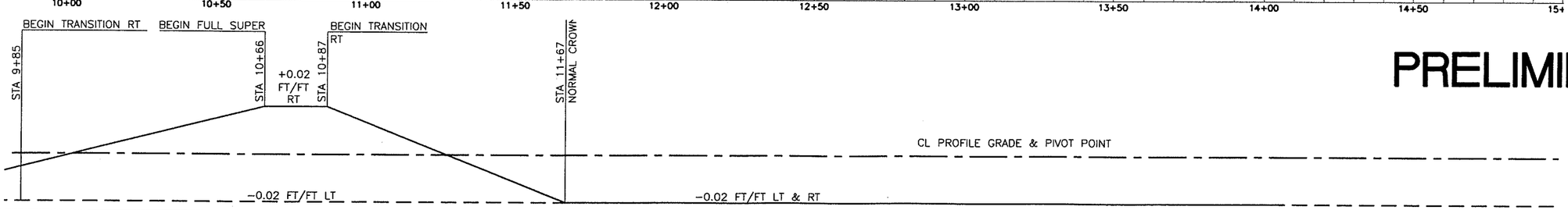

PRELIMINARY

DESIGNED	ME/JM
DRAWN	KB/RK
CRP	301422
HOR.	SEE SHEET
VERT.	SEE SHEET
DATE	07/31/05
DWG:	PP25
SHEET	67 OF 151

CALL 48 HOURS BEFORE YOU DIG 1-800-553-4344 "It's the Law" NORTHWEST UTILITIES NOTIFICATION CENTER

STATE OF WASHINGTON ROBERT M. EARICK 29030 REGISTERED PROFESSIONAL ENGINEER EXPIRES: MAY 28, 2007

ENGINEERING PROGRAM
DESIGN SECTION

ST JOHNS ROAD (NE 50TH AVE TO NE 72ND AVE)
PLAN & PROFILE 109TH ST (STA 10+00 TO 15+00)

proud past, promising future
CLARK COUNTY WASHINGTON

n:\CIP\PROJECTS\301422-STJohns-50thTo72nd\DESIGN\DWGS\PP25-26.dwg, 7/27/2005 3:21:25 PM, kerlinr

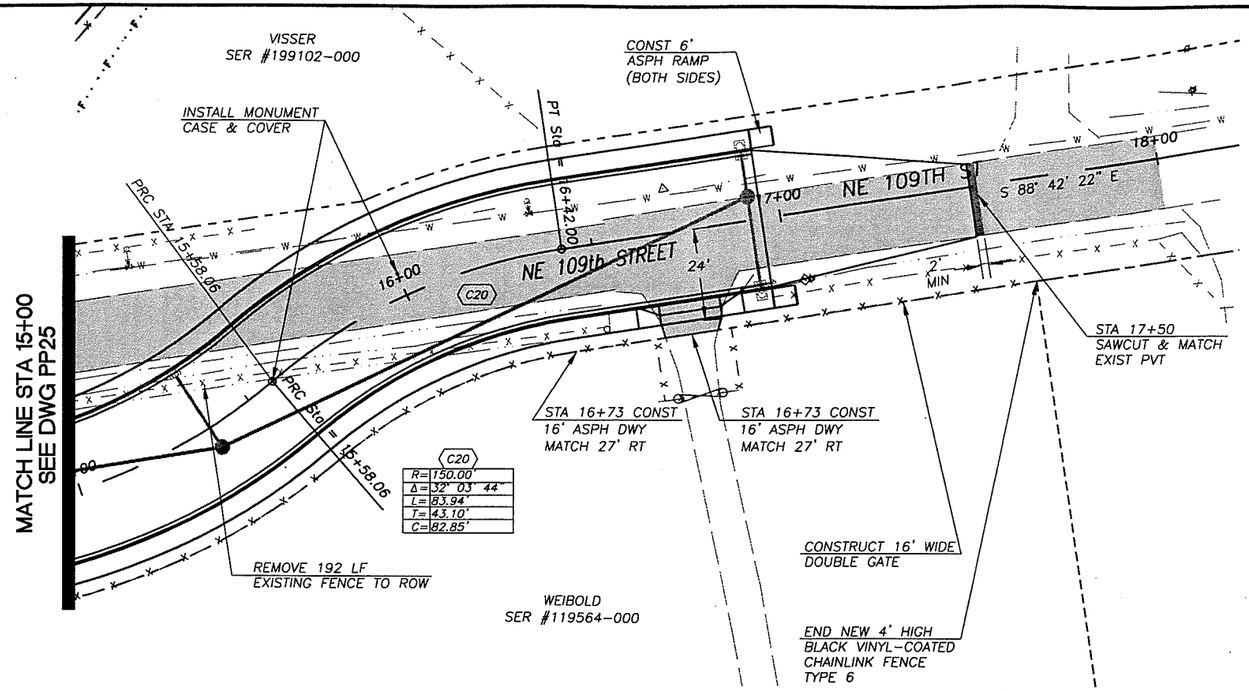

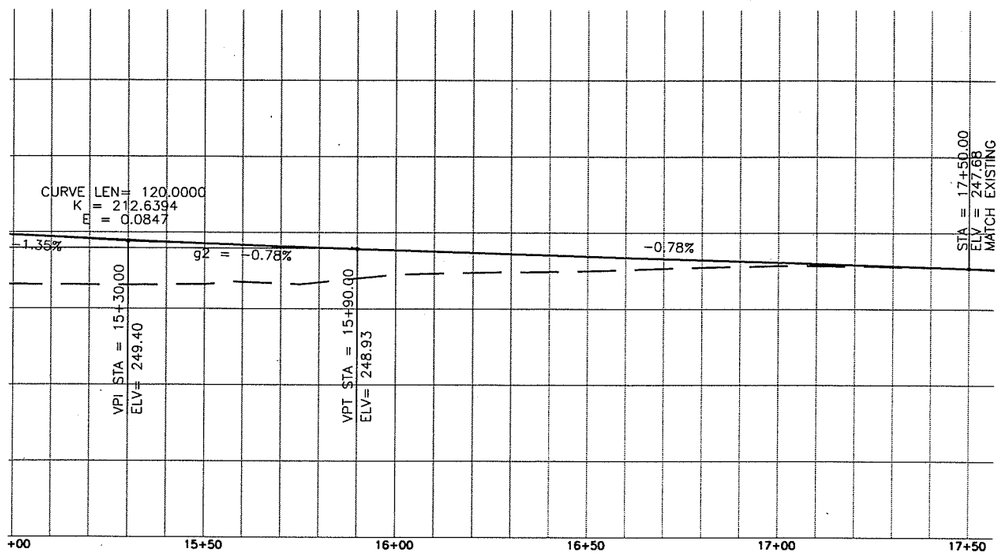

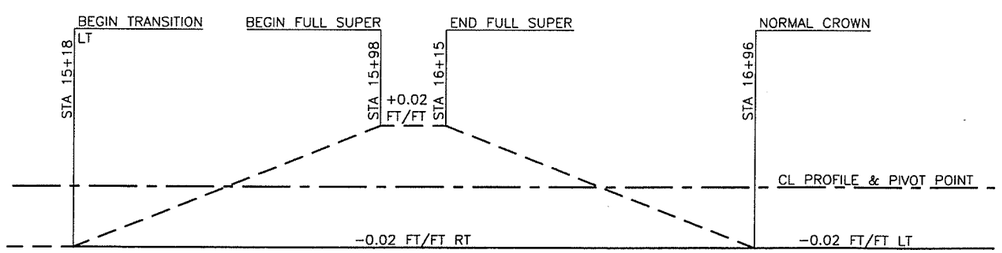

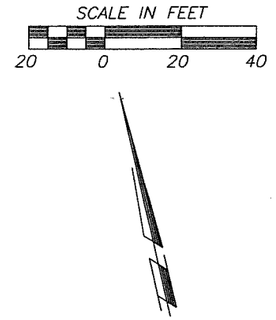

1. RELOCATE/REMOVE BY OTHERS
2. ADJUST MH RIM/CB GRATE TO FG
3. ADJUST VALVE COVER/METER BOX TO FG
4. REMOVE EXT CULVERT/DRAINAGE STRUCTURE
5. SAWCUT AND/OR MATCH EXT CURB AND/OR S/W.
6. SAWCUT EXISTING PAV'T.
7. RELOCATE CLEANOUT BEHIND ROW

REMOVE EXT RDWY STRUCTURE TO LIMITS SHOWN. REPLACE PER TYPICAL SECTIONS, AND PLAN LAYOUT.

MILL EXISTING PAV'T 0.25' OVERLAY TO MATCH

UNADJUSTED EARTHWORK QUANTITIES

EXCAVATION	80
EMBANKMENT	520

PRELIMINARY

DESIGNED	ME/JM
DRAWN	KB/RK
CRP	301422
HOR.	SEE SHEET
VERT.	SEE SHEET
DATE	07/31/05
DWG:	PP26
SHEET	68 OF 151

CALL 48 HOURS BEFORE YOU DIG 1-800-553-4344 "It's the Law" NORTHWEST UTILITIES NOTIFICATION CENTER

MICHAEL W. KIRKLICK STATE OF WASHINGTON 20362 REGISTERED PROFESSIONAL ENGINEER EXPIRES MAY 28, 2007

ENGINEERING PROGRAM
DESIGN SECTION

ST JOHNS ROAD (NE 50TH AVE TO NE 72ND AVE)
PLAN & PROFILE 109TH ST (STA 15+00 TO 20+00)

proud past, promising future
CLARK COUNTY WASHINGTON

n:\CIP\PROJECTS\301422-STJohns-50thTo72nd\DESIGN\DWGS\PP25-26.dwg, 7/27/2005 3:21:46 PM, kerlinr

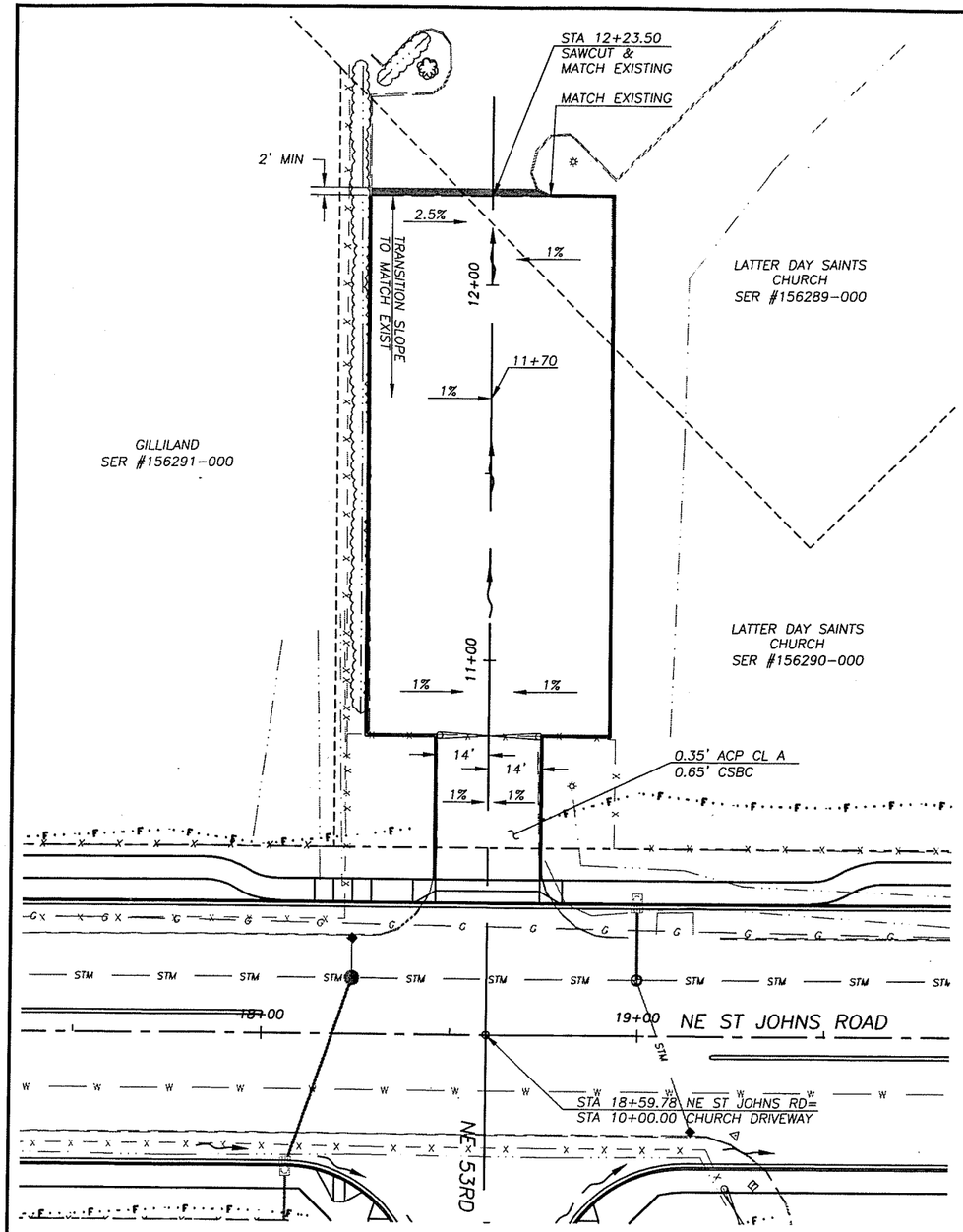

CHURCH PARKING LOT

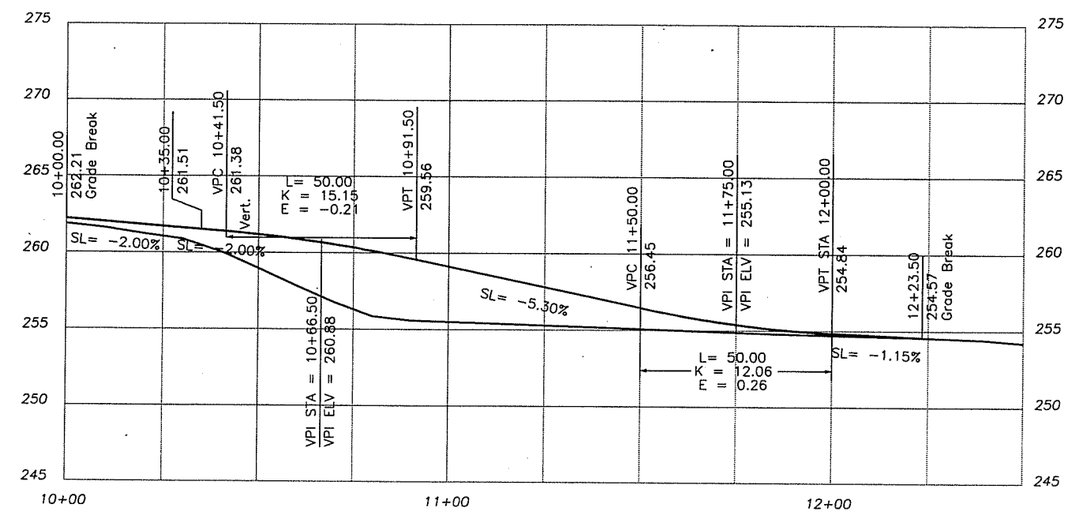

DRIVEWAY PROFILE

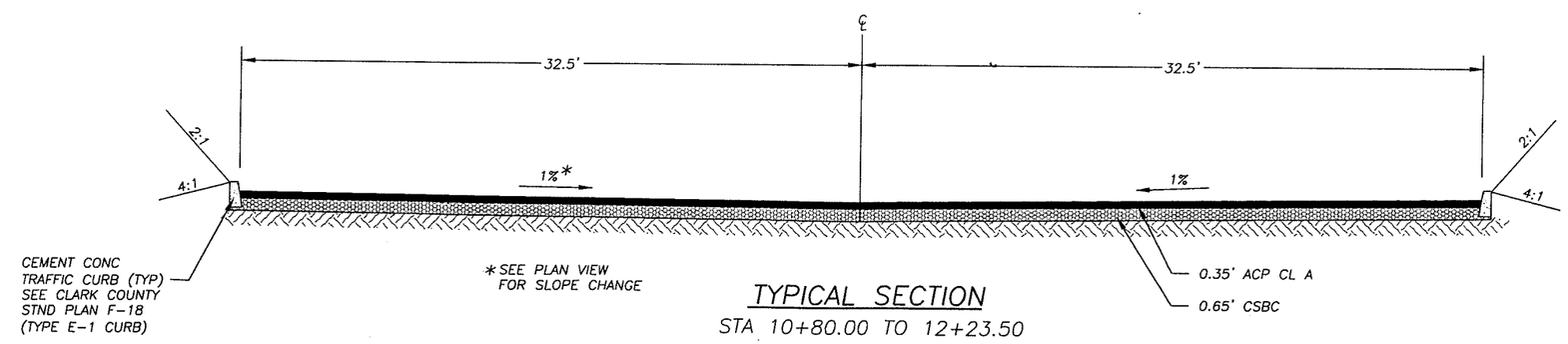

TYPICAL SECTION

STA 10+80.00 TO 12+23.50

SCALE IN FEET

20 0 20 40

PRELIMINARY

DESIGNED	ME/JM
DRAWN	KB/RK
CRP	301422
HOR.	SEE SHEET
VERT.	SEE SHEET
DATE	07/31/05
DWG:	DWY1
SHEET	69 OF 151

CALL 48 HOURS BEFORE YOU DIG
1-800-553-4344
"It's the Law"
NORTHWEST UTILITIES NOTIFICATION CENTER

MICHAEL M. KUNICK
STATE OF WASHINGTON
20030
REGISTERED PROFESSIONAL ENGINEER
EXPIRES: MAY 28, 2007

ENGINEERING PROGRAM
DESIGN SECTION

ST JOHNS ROAD (NE 50TH AVE TO NE 72ND AVE)
DRIVEWAY PLAN

proud past, promising future
CLARK COUNTY
WASHINGTON

n:\CIP\PROJECTS\301422-STJohns-50thTo72nd\DESIGN\DWGS\DWY1.dwg, 7/27/2005 3:22:18 PM, kerlinr

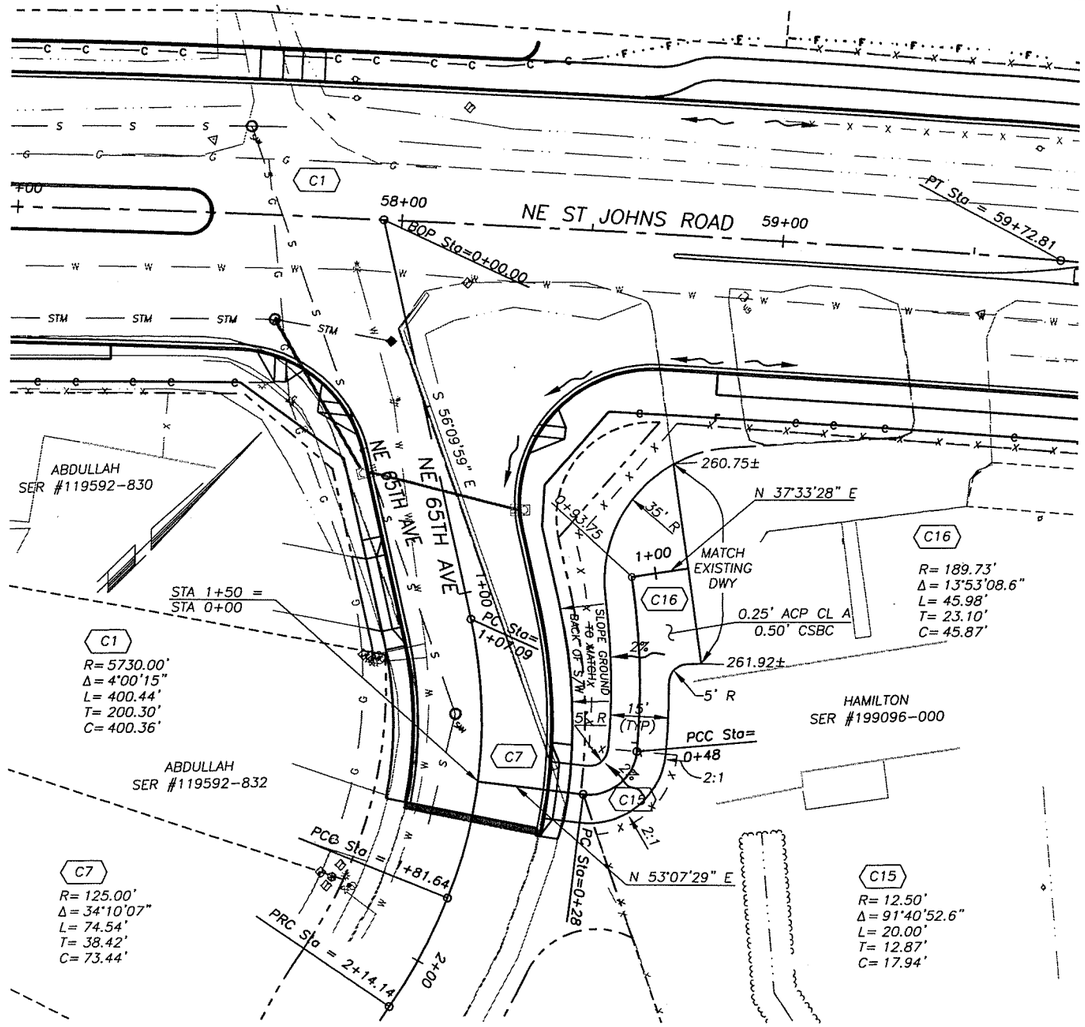

HAMILTON DRIVEWAY

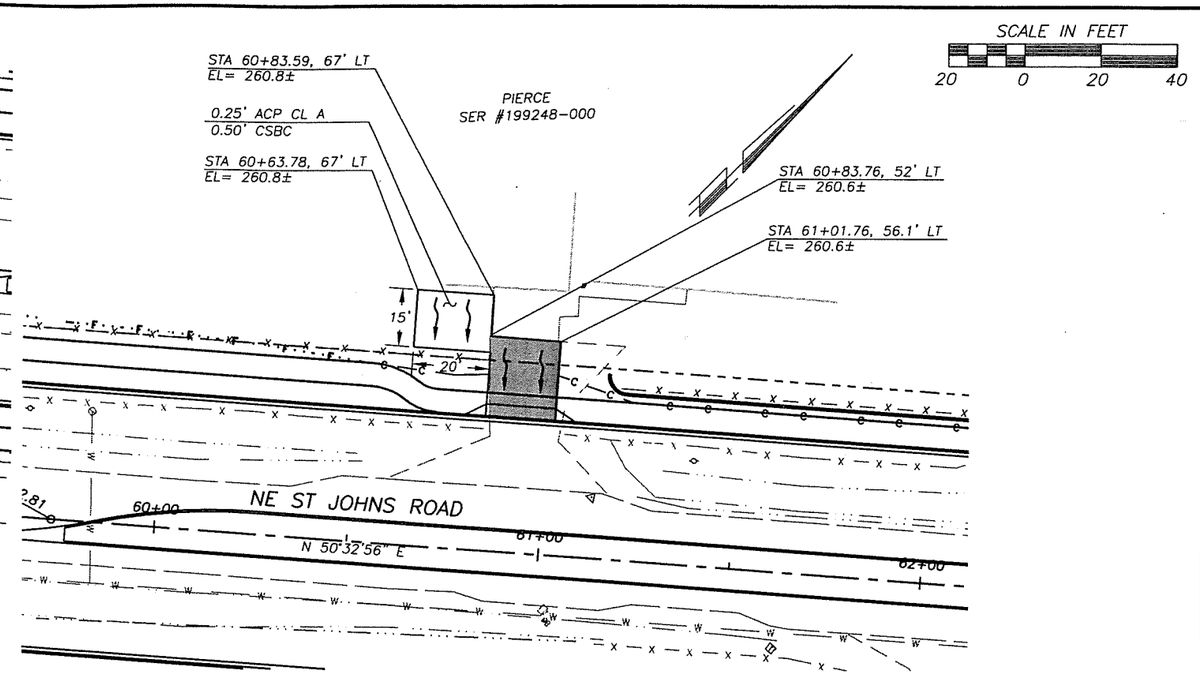

PIERCE DRIVEWAY

SCALE IN FEET

20 0 20 40

PRELIMINARY

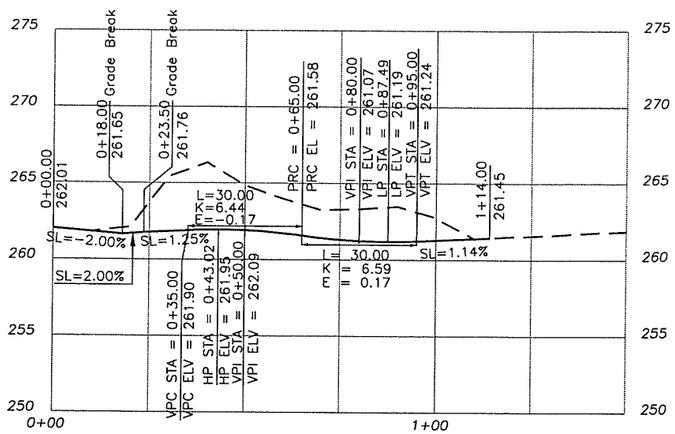

HAMILTON DRIVEWAY PROFILE

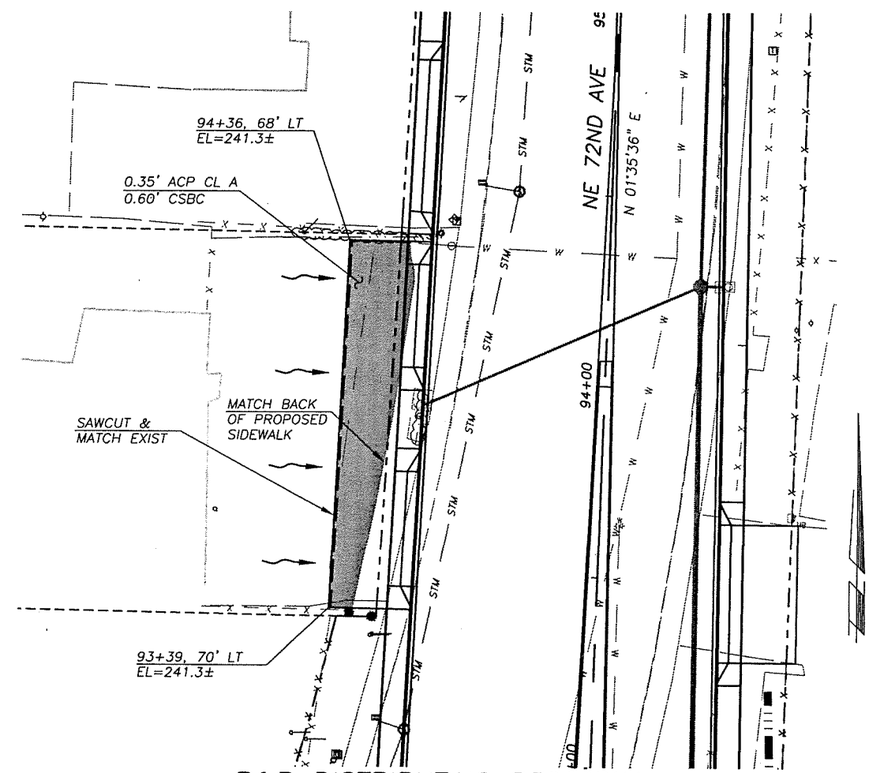

B&B DISTRIBUTING DRIVEWAY

DESIGNED ME/JM
DRAWN KB/RK
CRP 301422
HOR. SEE SHEET
VERT. SEE SHEET
DATE 07/31/05
DWG: DWY2
SHEET 70 OF 151

CALL 48 HOURS BEFORE YOU DIG
1-800-553-4344
"It's the Law"
NORTHWEST UTILITIES NOTIFICATION CENTER

MICHAEL M. EMICK
STATE OF WASHINGTON
PROFESSIONAL ENGINEER
EXPIRES: MAY 28, 2007

ENGINEERING PROGRAM
DESIGN SECTION

ST JOHNS ROAD (NE 50TH AVE TO NE 72ND AVE)
DRIVEWAY PLAN

proud past, promising future
CLARK COUNTY
WASHINGTON

n:\CIP\PROJECTS\301422-STJohns-50thTo72nd\DESIGN\DWGS\DWY2.dwg, 7/27/2005 3:22:54 PM, kerlinr

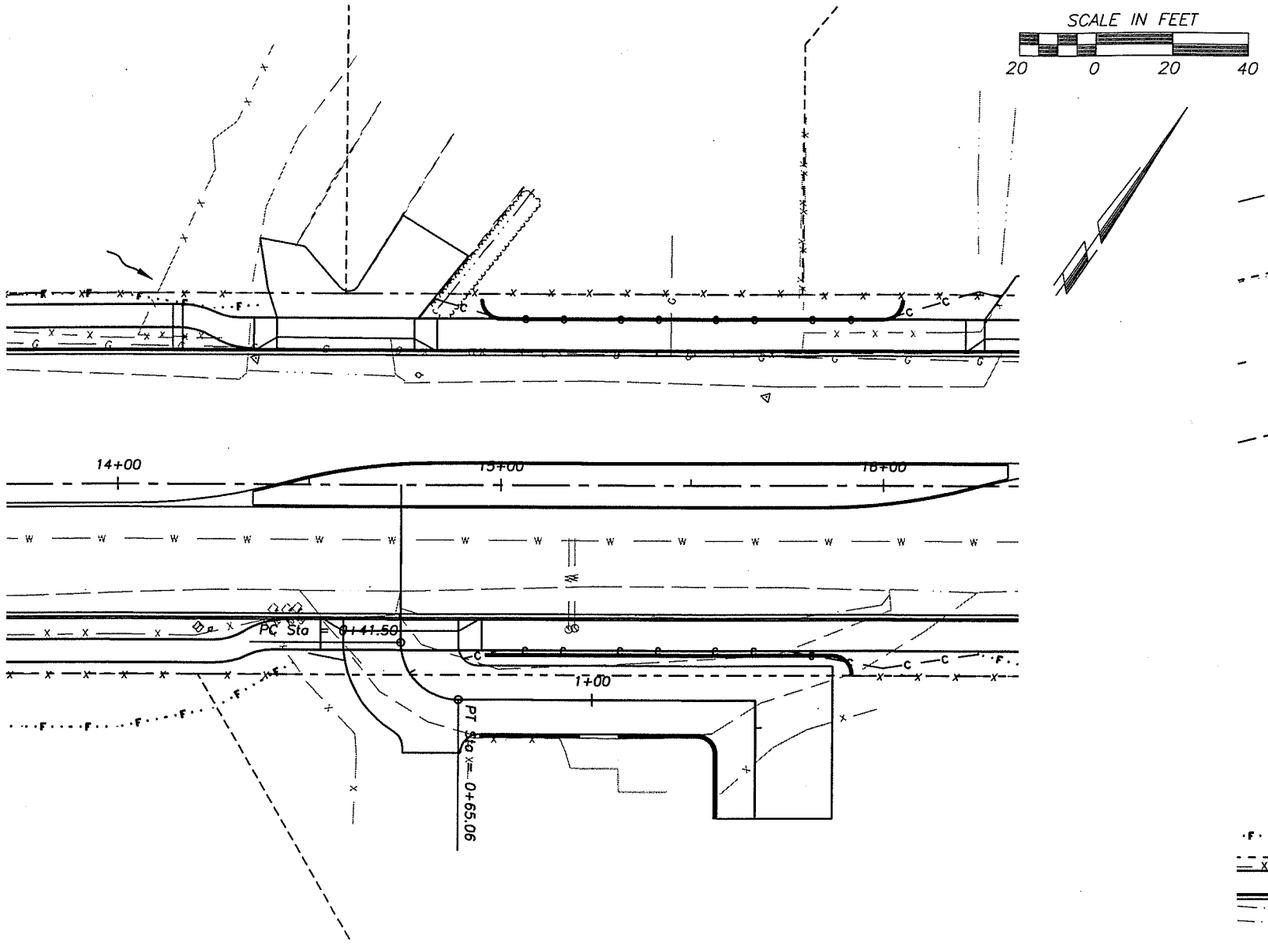

NUTTER DRIVEWAY

PRELIMINARY

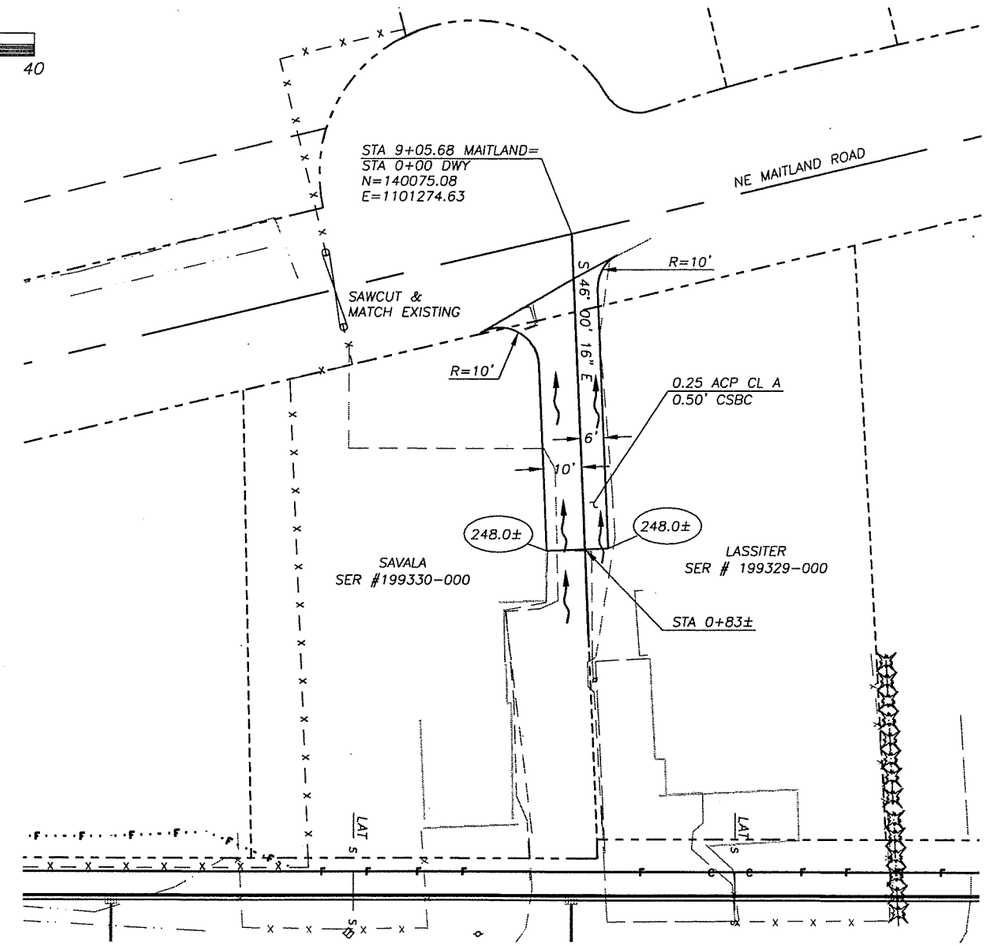

SAVALA/LASSITER DRIVEWAY

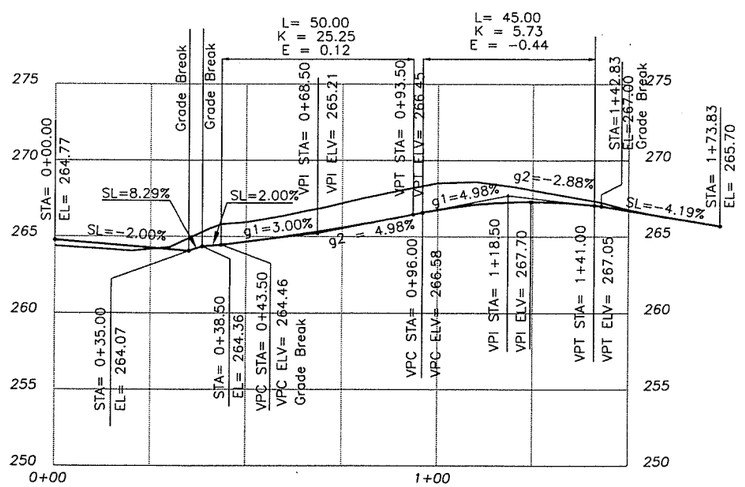

NUTTER DRIVEWAY PROFILE

DESIGNED	ME/JM
DRAWN	KB/RK
CRP	301422
HOR.	SEE SHEET
VERT.	SEE SHEET
DATE	07/31/05
DWG:	DWY3
SHEET	71 OF 151

CALL 48 HOURS BEFORE YOU DIG 1-800-553-4344 "It's the Law" NORTHWEST UTILITIES NOTIFICATION CENTER

STATE OF WASHINGTON M. L. MARCIC 20030 REGISTERED PROFESSIONAL ENGINEER EXPIRES: MAY 28, 2007

ENGINEERING PROGRAM
DESIGN SECTION

ST JOHNS ROAD (NE 50TH AVE TO NE 72ND AVE)
DRIVEWAY PLAN

proud past, promising future
CLARK COUNTY WASHINGTON

n:\CIP\PROJECTS\301422-STJohns-50thTo72nd\DESIGN\DWGS\DWY3.dwg, 7/27/2005 3:23:29 PM, kerlinr