CAPITAL IMPROVEMENTS PROGRAM
COUNTY ROAD PROJECT #310122

NE 72ND AVENUE

VICINITY NE 88TH STREET TO NE ST. JOHNS ROAD

PLANS FOR THE CONSTRUCTION OF
ROADWAYS AND STORM DRAINAGE

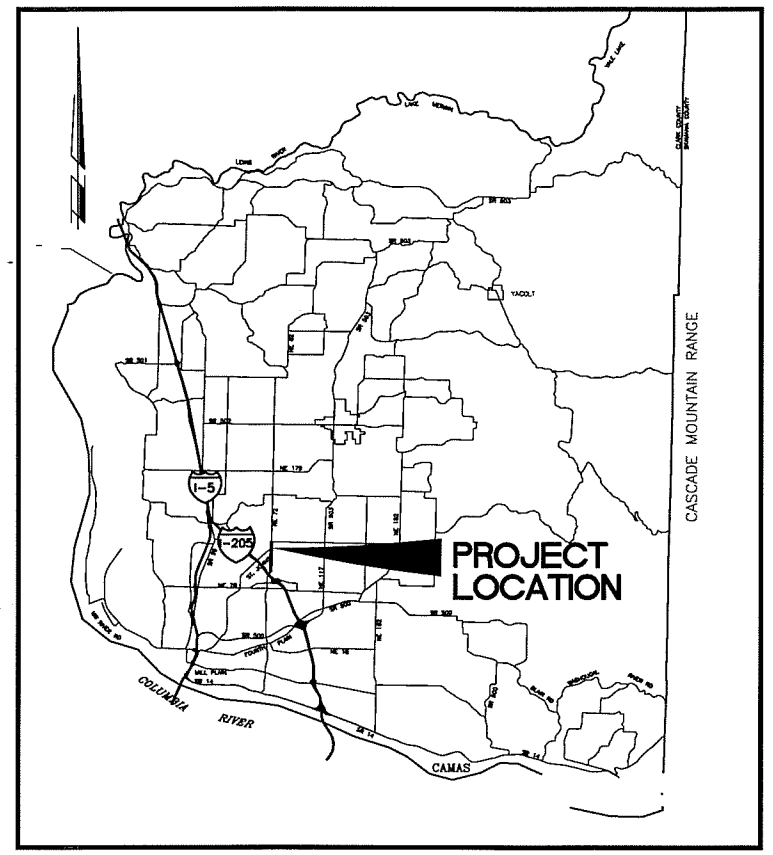

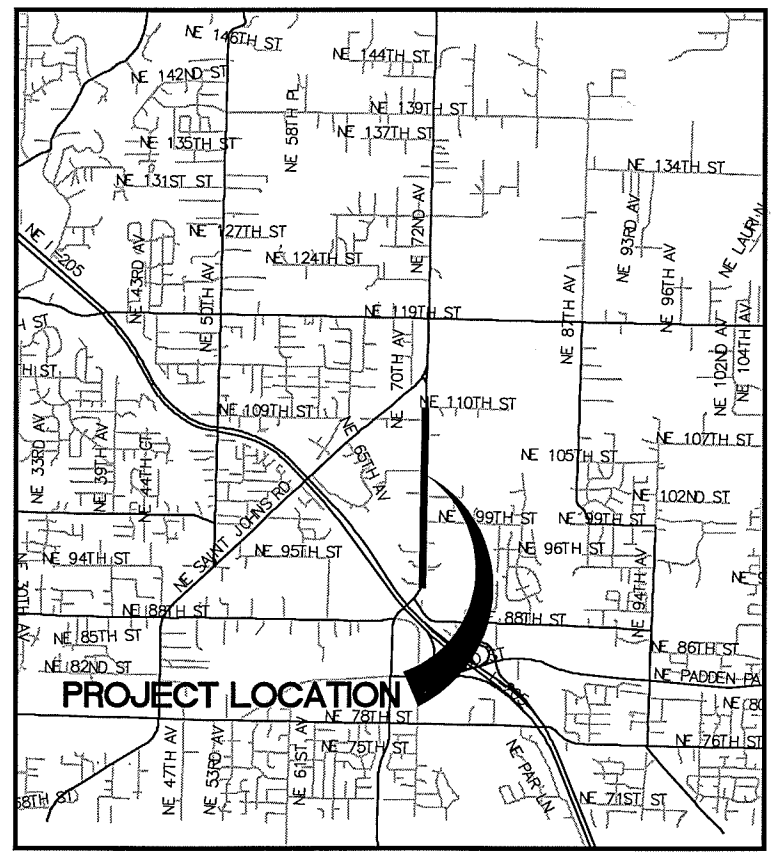

INDEX OF SHEETS

1	CV1	COVER SHEET
2	SQ1	SUMMARY OF QUANTITIES AND LEGEND
3	LAY	SHEET LAYOUT
4	TS1	TYPICAL SECTIONS
5	HV1	HORIZONTAL AND VERTICAL CONTROL
6	HV2	HORIZONTAL AND VERTICAL CONTROL (NE 99TH STREET)
7	SSP1	SLURRY SEAL PLAN
8	EC1	EROSION CONTROL PLAN
9	EC2	EROSION CONTROL PLAN
10	EC3	EROSION CONTROL DETAILS
11	RD1	ROADWAY DETAILS
12	RD2	ROADWAY DETAILS
13	DD1	DRAINAGE DETAILS I
14	DD2	DRAINAGE DETAILS II
15	DD3	DRAINAGE DETAILS III
16	DD4	DRAINAGE DETAILS IV
17	RW1	RETAINING WALL
18	RW2	RETAINING WALL DETAILS
19	PP1	PLAN & PROFILE NE 72ND AVE (STA 35+00 TO STA 40+00)
20	PP2	PLAN & PROFILE NE 72ND AVE (STA 40+00 TO STA 45+00)
21	PP3	PLAN & PROFILE NE 72ND AVE (STA 45+00 TO STA 50+00)
22	PP4	PLAN & PROFILE NE 72ND AVE (STA 50+00 TO STA 55+00)
23	PP5	PLAN & PROFILE NE 72ND AVE (STA 55+00 TO STA 60+00)
24	PP6	PLAN & PROFILE NE 72ND AVE (STA 60+00 TO STA 65+00)
25	PP7	PLAN & PROFILE NE 72ND AVE (STA 65+00 TO STA 70+00)
26	PP8	PLAN & PROFILE NE 72ND AVE (STA 70+00 TO STA 75+00)
27	PP9	PLAN & PROFILE NE 72ND AVE (STA 75+00 TO STA 80+00)
28	PP10	PLAN & PROFILE NE 72ND AVE (STA 80+00 TO STA 85+00)
29	PP11	PROFILES NE 99TH STREET AND NE 109TH STREET
30	DP1	DRAINAGE PLAN NE 72ND AVE (STA 35+00 TO STA 40+00)
31	DP1B	DRAINAGE PLAN NE 72ND AVE (STA 35+00 TO STA 40+00; LINE "J")
32	DP2	DRAINAGE PLAN NE 72ND AVE (STA 40+00 TO STA 45+00)
33	DP3	DRAINAGE PLAN NE 72ND AVE (STA 45+00 TO STA 50+00)
34	DP4	DRAINAGE PLAN NE 72ND AVE (STA 50+00 TO STA 55+00)
35	DP5	DRAINAGE PLAN NE 72ND AVE (STA 55+00 TO STA 60+00)
36	DP6	DRAINAGE PLAN NE 72ND AVE (STA 60+00 TO STA 65+00)
37	DP7	DRAINAGE PLAN NE 72ND AVE (STA 65+00 TO STA 70+00)
38	DP8	DRAINAGE PLAN NE 72ND AVE (STA 70+00 TO STA 75+00)
39	DP9	DRAINAGE PLAN NE 72ND AVE (STA 75+00 TO STA 80+00)
40	DP10	DRAINAGE PLAN NE 72ND AVE (STA 80+00 TO STA 85+00)
41	DP101	DRAINAGE PLAN NE 99TH STREET (STA 0+00 TO STA 5+00)
42	DP102	DRAINAGE PLAN NE 99TH STREET (STA 5+00 TO 10+00)
43	DP103	DRAINAGE PLAN NE 99TH STREET (STA 10+00 TO 15+00)
44	DP104	DRAINAGE PLAN NE 99TH STREET (STA 15+00 TO 20+00)
45	DP105	DRAINAGE PLAN NE 99TH STREET (STA 20+00 TO 25+00)
46	DP106	DRAINAGE PLAN NE 99TH STREET (STA 25+00 TO 30+00)
47	DP107	DRAINAGE PLAN NE 99TH STREET (STA 30+00 TO 35+00)
48	DP201	DRAINAGE PLAN STORM SEWER LINE D
49	WP1	WATER LINE PLAN (STA 35+00 TO STA 40+00)
50	WP2	WATER LINE PLAN (STA 40+00 TO STA 45+00)
51	WP3	WATER LINE PLAN (STA 45+00 TO STA 50+00)
52	WP4	WATER LINE PLAN (STA 50+00 TO STA 55+00)
53	I01	INTERSECTION PLAN
54	STR1	SIGNING & STRIPING PLAN
55	STR2	SIGNING & STRIPING PLAN
56	STR2	SIGNING & STRIPING PLAN
57	STR2	SIGNING & STRIPING PLAN
58	STR2	SIGNING & STRIPING DETAILS
59	L1	LAYOUT MAIN TRACK AND SIDING
60	L2	PROFILES MAIN TRACK AND SIDING
61	L3	RAILROAD CROSS SECTIONS
62	L4	RAILROAD CONSTRUCTION DETAILS
63	L5	RAILROAD TYPICAL SECTIONS
64	L6	RAILROAD CONSTRUCTION DETAILS
65	RR1	RAILROAD CROSSING STANDARD PLANS
66	RR2	RAILROAD CROSSING STANDARD PLANS
67	RR3	RAILROAD CROSSING STANDARD PLANS
68	RR4	RAILROAD CROSSING STANDARD PLANS
69	RTD1	RAILROAD TRACK DETAILS
70	LS1	LANDSCAPE PLAN
71	LS2	LANDSCAPE PLAN
72	LS3	LANDSCAPE PLAN
73	LS4	LANDSCAPE PLAN
74	LS5	LANDSCAPE PLAN

PRELIMINARY

99% PLANS

ENG #

COMMISSIONERS:

BETTY SUE MORRIS, Chair
JUDIE STANTON, Commissioner
CRAIG A. PRIDEMORE, Commissioner

CLARK COUNTY WASHINGTON
proud past, promising future

DEPARTMENT OF
PUBLIC WORKS

DESIGN AND ENGINEERING DIVISION- DESIGN SECTION

MICHAEL M. EMRICK — STATE OF WASHINGTON — 29030 — REGISTERED PROFESSIONAL ENGINEER — EXPIRES: MAY 26, 2005

JOHN MILNE — STATE OF WASHINGTON — 31148 — REGISTERED PROFESSIONAL ENGINEER — EXPIRES: JULY 7, 2005

Quality Assurance	Project Manager	Public Works Director/ County Engineer
Larry Maddux, PLS — DATE:	Scott Sawyer, P.E. — DATE:	Peter Capell, P.E. — DATE:

CLARK COUNTY WASHINGTON
proud past, promising future

Recommended for Approval

Grading _____ Erosion _____

Storm Water Plan _____

Development Review Manager — Date

N:\CIP\PROJECTS\310122-NE72Ave-H99toSTJohns\DESIGN\DWGS\72ndcov.dwg, 10/26/2004 2:34:09 PM, kerlinr

SUMMARY OF QUANTITIES

QUANT 310122	QUANT CITY VANC.	UNIT	BID ITEM DESCRIPTION
1		L.S.	MOBILIZATION
1		EST.	MINOR CHANGE
20		HOUR	REPLACEMENT STAKING SERVICES
			TRAFFIC CONTROL
6000		HOUR	TRAFFIC CONTROL LABOR
450		HOUR	TRAFFIC CONTROL SUPERVISOR
1		L.S.	TEMPORARY TRAFFIC CONTROL DEVICES
214		S.F.	CONSTRUCTION SIGNS CLASS "A"
			PREPARATION
1		L.S.	CLEARING AND GRUBBING ACRE?
1		EST.	ROADSIDE CLEANUP
1		L.S.	REMOVAL OF STRUCTURES AND OBSTRUCTIONS
			GRADING
13700		C.Y.	ROADWAY EXCAVATION (INCL HAUL)
75000		C.Y.	STORMWATER FACILITY EXCAVATION (INCL. HAUL)
0		C.Y.	UNSUITABLE FOUNDATION EXCAVATION (INCL. HAUL)
6130		C.Y.	EMBANKMENT COMPACTION
0		C.Y.	STORMWATER FACILITY EMBANKMENT COMPACTION
0		TON	GRAVEL BORROW (INCL. HAUL)
0		TON	COMMON BORROW (INCL. HAUL)
750		MGAL	WATER
0		S.Y.	CONSTRUCTION GEOTEXTILE FOR SOIL STABILIZATION
0		S.Y.	IMPERMEABLE LINER
0		S.Y.	WETLAND BALLAST
			SURFACING
0		S.Y.	GRAVEL DWY; GRAVEL ACCESS RD; GRAVEL APPROACH
21212		TON	CRUSHED SURFACING BASE COURSE
667		TON	CRUSHED SURFACING TOP COURSE
0		TON	BALLAST (INCL. HAUL)
6236		TON	ASPHALT CONCRETE PAVEMENT CL. A
7846		TON	ASPHALT CONCRETE PAVEMENT CL. E
218		L.F.	SAWCUT EXISTING (ASPHALT) PAVEMENT
2140		S.Y.	PLANING BITUMINOUS PAVEMENT
0		S.Y.	ASPHALT CONCRETE EXTENSION
			STRUCTURES
0		L.F.	COATED CHAIN LINK FENCE FOR WALL TYPE 6
0		S.F.	GEOGRID SOIL REINFORCEMENT FABRIC
0		S.F.	MODULAR/SEGMENTAL BLOCK RETAINING WALL (INCL. CAP UNIT)
			DRAINAGE STRUCTURES, STORM SEWERS, SANITARY SEWERS, WATERMAINS, AND CONDUITS
0		L.F.	CULVERT PIPE 18 IN. DIAM.
160		L.F.	CULVERT PIPE 24 IN. DIAM.
0		L.F.	CULVERT PIPE 30 IN. DIAM.
160		L.F.	CULVERT PIPE 36 IN. DIAM.
105		L.F.	DUCTILE IRON PIPE 10 IN. DIAM.
0		L.F.	DUCTILE IRON PIPE 12 IN. DIAM.
792		L.F.	STORM SEWER PIPE, 10 IN. DIAM.
1411		L.F.	STORM SEWER PIPE, 12 IN. DIAM.
10		L.F.	STORM SEWER PIPE, 15 IN. DIAM.
1914		L.F.	STORM SEWER PIPE, 18 IN. DIAM.
1427		L.F.	STORM SEWER PIPE, 24 IN. DIAM.
488		L.F.	STORM SEWER PIPE, 30 IN. DIAM.
1236		L.F.	STORM SEWER PIPE, 36 IN. DIAM.
3050		L.F.	STORM SEWER PIPE, 42 IN. DIAM.
130		L.F.	PLAIN CONCRETE CULVERT PIPE 36 IN. DIAM.
136		L.F.	CLASS IV REINF. CONC. CULVERT PIPE 18 IN. DIAM.
85		L.F.	CLASS IV REINF. CONC. CULVERT PIPE 42 IN. DIAM.
118		L.F.	CLASS V REINF. CONC. CULVERT PIPE 36 IN. DIAM.
0		L.F.	6'-1" X 4'-7" CM PIPE ARCH
11		EACH	MANHOLE 48 IN. DIAM. TYPE 1
2		EACH	MANHOLE 48 IN. DIAM. TYPE 3
1		EACH	CONSTRUCT MANHOLE 48 IN. DIAM. TYPE 3 OVER EXSTING STM SEWER
12		EACH	MANHOLE 60 IN. DIAM. TYPE 1
1		EACH	MANHOLE 60 IN. DIAM. TYPE 2 WITH SUMP
1		EACH	MANHOLE 60 IN. DIAM. TYPE 3
3		EACH	MANHOLE 72 IN. DIAM. TYPE 1
13		EACH	MANHOLE 72 IN. DIAM. TYPE 3
1		EACH	MANHOLE 72 IN. DIAM. TYPE 2 WITH SUMP
1		EACH	MANHOLE 72 IN. DIAM. TYPE 3 WITH SUMP
1		EACH	MANHOLE 84 IN. DIAM. TYPE 1
1		EACH	MANHOLE 84 IN. DIAM. TYPE 3 WITH SUMP AND FLOW SPLITTER
1		EACH	MANHOLE 96 IN. DIAM. TYPE 2
10		EACH	CATCH BASIN TYPE 1
2		EACH	COMBINATION CURB INLET TYPE 1
16		EACH	COMBINATION INLET
14		EACH	CONCRETE COMBINATION CURB INLET, TYPE 2 48 IN. DIAM.
16		EACH	CONCRETE DITCH INLET
0		EACH	SIDEWALK CHASE
0		C.Y.	STREAMBED ROCK
0		C.Y.	STREAMBED GRAVEL
0		L.F.	ROCK WEIRS
122		C.Y.	LIGHT, LOOSE RIPRAP
0		EACH	ADJUST MANHOLE/CATCH BASIN/INLET/DRYWELL METHOD 1
8100	2208	EACH	TRENCH SAFETY SYSTEM
2		EACH	TRASH RACK
	0	EACH	ADJUST WATER/GAS VALVE RIM, COVER & FRAME
	180	L.F.	DUCTILE IRON PIPE FOR WATER MAIN, 6 IN. DIAM.
	510	L.F.	DUCTILE IRON PIPE FOR WATER MAIN, 8 IN. DIAM.
	1518	L.F.	DUCTILE IRON PIPE FOR WATER MAIN, 12 IN. DIAM.
	2208	L.F.	TRENCH EXCAVATION AND BACKFILL
	7	EACH	MJ VALVE 8 INCH
	9	EACH	MJ BUTTERFLY VALVE 12 INCH
	1	EACH	12 IN. X 12 IN. MJ CROSS
	6	EACH	12 IN. X 12 IN. MJ TEE
	5	EACH	12 IN. X 6 IN. FLG TEE
	2	EACH	PLUG, 8"/12"
	7	EACH	TEMPORARY BLOWOFF VALVE
	5	EACH	6 IN. MJXFLG VALVE
	5	EACH	NEW FIRE HYDRANT ASSEMBLY

310122	CITY VANC.	UNIT	EROSION CONTROL AND PLANTING
20		ACRE	WETLAND PLANTING
14520		S.F.	OPEN CELL SYSTEM AND POROUS PAVERS
8500		L.F.	SILT FENCE
25		ACRE	EROSION CONTROL SEEDING & MULCHING FOR STORMWATER FACILITIES
0		ACRE	EROSION CONTROL SEEDING AND MULCHING
260		S.Y.	EROSION CONTROL BLANKET (PERMANENT)
2		EACH	STABILIZED CONSTRUCTION ENTRANCE
2		EACH	TIRE WASH
30		EACH	INLET PROTECTION
1		EACH	EROSION CONTROL & SPILL PREVENTION REINSPECTION FEE
150		HOUR	EROSION PREVENTION AND SEDIMENT CONTROL LEAD
1		L.S.	SPCC PLAN
782		C.Y.	TOPSOIL TYPE B
260		C.Y.	BARK MULCH
1		L.S.	LANDSCAPE RESTORATION
49		EACH	PSIPE 1-1/2 IN. CALIPER TREES (Acer platanoides "Crimson Sentry")
62		EACH	PSIPE 1-1/2 IN. CALIPER TREES (Prunus subhirtella "Autumn Flowering Cherry")
			OTHER
9381		L.F.	CEMENT CONC. BARRIER CURB AND GUTTER
958		S.Y.	CEMENT CONCRETE APPROACH, 3-DAY
253		L.F.	TYPE C PRECAST TRAFFIC CURB
150		L.F.	BEAM GUARDRAIL TYPE 1
2		EACH	BEAM GUARDRAIL FLARED TERMINAL
0		L.F.	FENCE RELOCATION
1450		L.F.	COATED CHAIN LINK FENCE - TYPE 1
1		EACH	DOUBLE 14 FT. COATED CHAIN LINK GATE
5629		S.Y.	CEMENT CONCRETE SIDEWALK
80		C.Y.	LIGHT LOOSE RIPRAP
1		L.S.	RAILROAD CROSSING AND SIDING UPGRADE
0		EACH	MAILBOX SUPPORT, TYPE 1
0		EACH	MAILBOX SUPPORT, TYPE 2
1		L.S.	RELOCATE POWER POLES

PRELIMINARY

LEGEND

- ROW LINE
- NEW EDGE OF PAVEMENT
- NEW CURB LINE
- NEW CENTER LINE
- NEW FENCE LINE
- NEW STORM DRAIN OR CULVERT
- NEW FILL LIMITS
- NEW CUT LIMITS
- SAWCUT LINE
- PERMANENT SLOPE EASEMENT
- NEW SILT FENCE
- EXISTING EDGE OF PAVEMENT
- EXISTING CURB LINE
- EXISTING CENTER LINE
- EXISTING FENCE LINE
- EXISTING TELEPHONE LINE
- EXISTING WATER LINE
- EXISTING UNDERGROUND ELECTRIC
- EXISTING SANITARY SEWER LINE
- EXISTING STORM DRAINAGE
- EXISTING GAS LINE
- EXISTING CULVERT
- EXISTING DITCH CENTER LINE
- EXISTING GUARDRAIL

SYMBOLS

- NEW CATCH BASIN (CB)
- NEW MANHOLE (MH)
- NEW CURB INLET (CI)
- NEW COMBINATION CURB INLET (CCI)
- NEW MAIL BOX
- NEW HANDICAP RAMP
- CURVE TABLE
- EXISTING TRANSFORMER
- EXISTING ELEC TOWER
- EXISTING SANITARY SEWER MH
- EXISTING FIRE HYDRANT
- EXISTING CLEAN OUT
- EXISTING GAS VALVE
- EXISTING WATER METER
- EXISTING WATER VALVE
- EXISTING SIGNAL POLE
- EXISTING TELEPHONE VAULT
- EXISTING TELEVISION BOX
- EXISTING WELL
- EXISTING BRUSH LINE
- EXISTING HEDGE
- EXISTING CURB INLET (CI)
- EXISTING CATCH BASIN (CB)
- EXISTING STORM MH
- EXISTING MISC MH
- EXISTING SHRUB
- EXISTING CONIFEROUS TREE
- EXISTING DECIDUOUS TREE
- EXISTING SIGN
- EXISTING DECIDUOUS TREE
- EXISTING J BOX
- EXISTING TELEPHONE MANHOLE
- EXISTING TELEPHONE POLE
- EXISTING LIGHT
- EXISTING GUY ANCHOR
- EXISTING POWER POLE
- EXISTING MAIL BOX
- EXISTING TELEPHONE PEDESTAL
- EXISTING SPRINKLER HEAD
- TRAVERSE POINT
- TEST HOLE

DESIGNED	MME
DRAWN	RRK
CRP	310122
HOR.	NA
VERT.	NA
DATE	10/29/04
DWG:	SQ1
SHEET	OF

CALL 48 HOURS BEFORE YOU DIG 1-800-553-4344 "It's the Law" NORTHWEST UTILITIES NOTIFICATION CENTER

STATE OF WASHINGTON MICHAEL M. ENDRICK 29630 REGISTERED PROFESSIONAL ENGINEER EXPIRES JULY 28, 2005

DESIGN & ENGINEERING DIVISION
DESIGN SECTION

NE 72ND AVENUE
SUMMARY OF QUANITITES AND LEGEND

proud past, promising future
CLARK COUNTY WASHINGTON

N:\CIP\PROJECTS\310122-NE72Ave-H99toSTJohns\DESIGN\DWGS\SQ01.dwg, 10/27/2004 8:34:35 AM, kerlinr

LEGEND

PP5: PLAN & PROFILE/DRAINAGE PLAN AND PROFILE
DP101: DRAINAGE PLAN AND PROFILE (OUTFALL PIPE)
WMA2: PLAN; WETLAND MITIGATION AREA

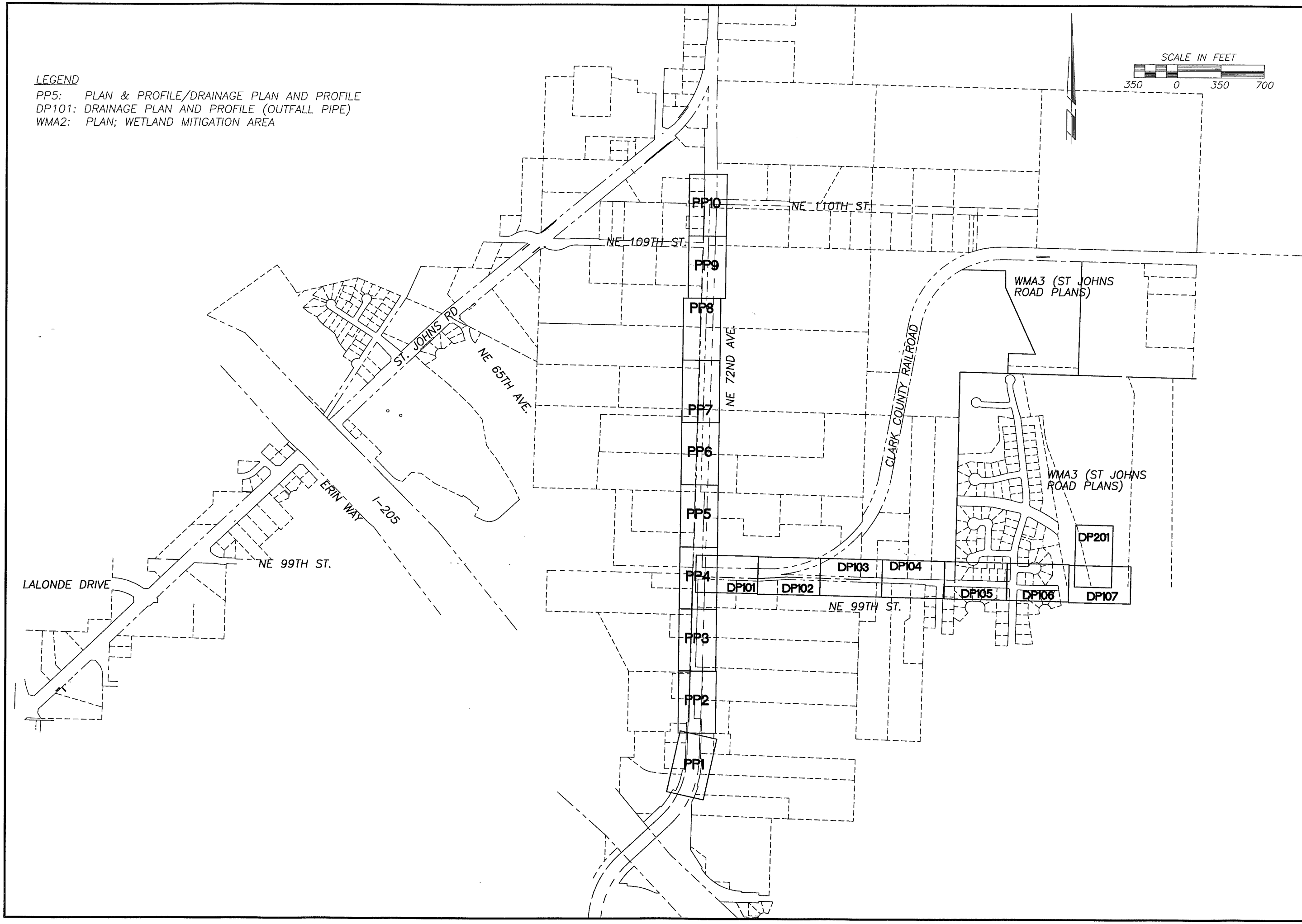

DESIGNED MME/JM
DRAWN KMB
CRP 310122
HOR. 1"=350'
VERT. NA
DATE 10/29/04
DWG: LAY1
SHEET OF

CALL 48 HOURS BEFORE YOU DIG
1-800-553-4344
"It's the Law"
NORTHWEST UTILITIES NOTIFICATION CENTER

MICHAEL S. EMMOCK
STATE OF WASHINGTON
20030
REGISTERED PROFESSIONAL ENGINEER
EXPIRES: MAY 28, 2005

DESIGN & ENGINEERING DIVISION
DESIGN SECTION

NE 72ND AVENUE
SHEET LAYOUT

proud past, promising future
CLARK COUNTY
WASHINGTON

N:\CIP\PROJECTS\310122-NE72Ave-H99toSTJohns\DESIGN\DWGS\72ndLAY.dwg, Layout1, 10/21/2004 3:28:05 PM, begleyk

PRELIMINARY

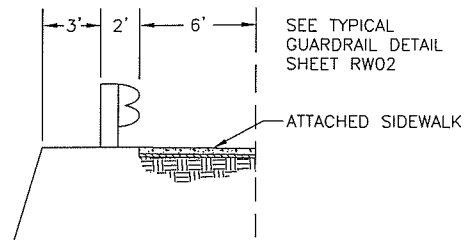

WALL SECTION

STA 49+50 TO 51+00

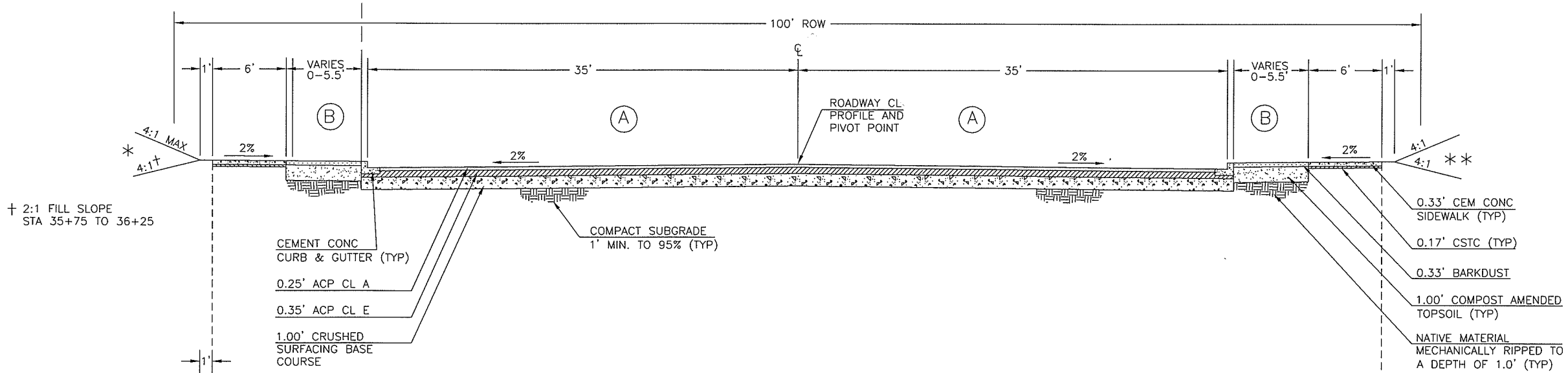

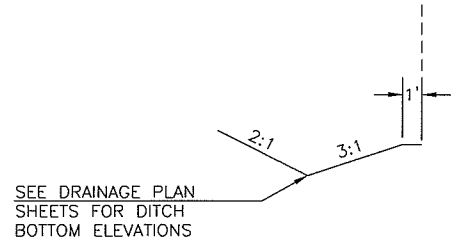

STA 45+25 TO 47+25

* DITCH SECTION

NE 72ND AVENUE

STA 40+00 TO 82+63.10

(A) 35' TYPICAL WIDTH. SEE PLAN SHEETS FOR TAPER WIDTHS AND LENGTHS.

(B) SEE PLAN SHEET FOR WIDTHS

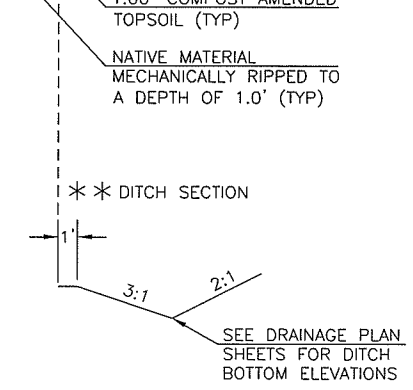

STA 40+92 TO 42+50
STA 48+25 TO 52+25
STA 59+63 TO 80+25

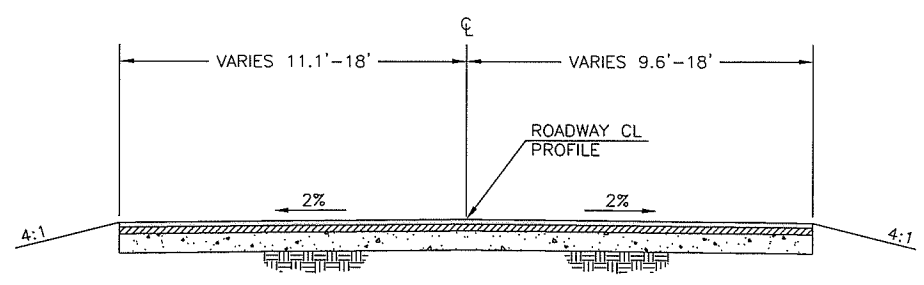

NE 99TH STREET

STA 0+94.76 TO 1+80.00

DESIGNED	MME
DRAWN	RRK
CRP	310122
HOR.	NA
VERT.	NA
DATE	6/20/03
DWG:	TS1
SHEET	OF

CALL 48 HOURS BEFORE YOU DIG 1-800-553-4344 "It's the Law" NORTHWEST UTILITIES NOTIFICATION CENTER

MICHAEL W. EMRICK STATE OF WASHINGTON 21030 REGISTERED PROFESSIONAL ENGINEER EXPIRES: MAY 26, 2005

DESIGN & ENGINEERING DIVISION
DESIGN SECTION

NE 72ND AVENUE TYPICAL SECTIONS

proud past, promising future

CLARK COUNTY WASHINGTON

N:\CIP\PROJECTS\310122-NE72Ave-H99toST Johns\DESIGN\DWGS\TS1.dwg, Layout1, 10/20/2004 10:22:35 AM, begleyk

PRELIMINARY

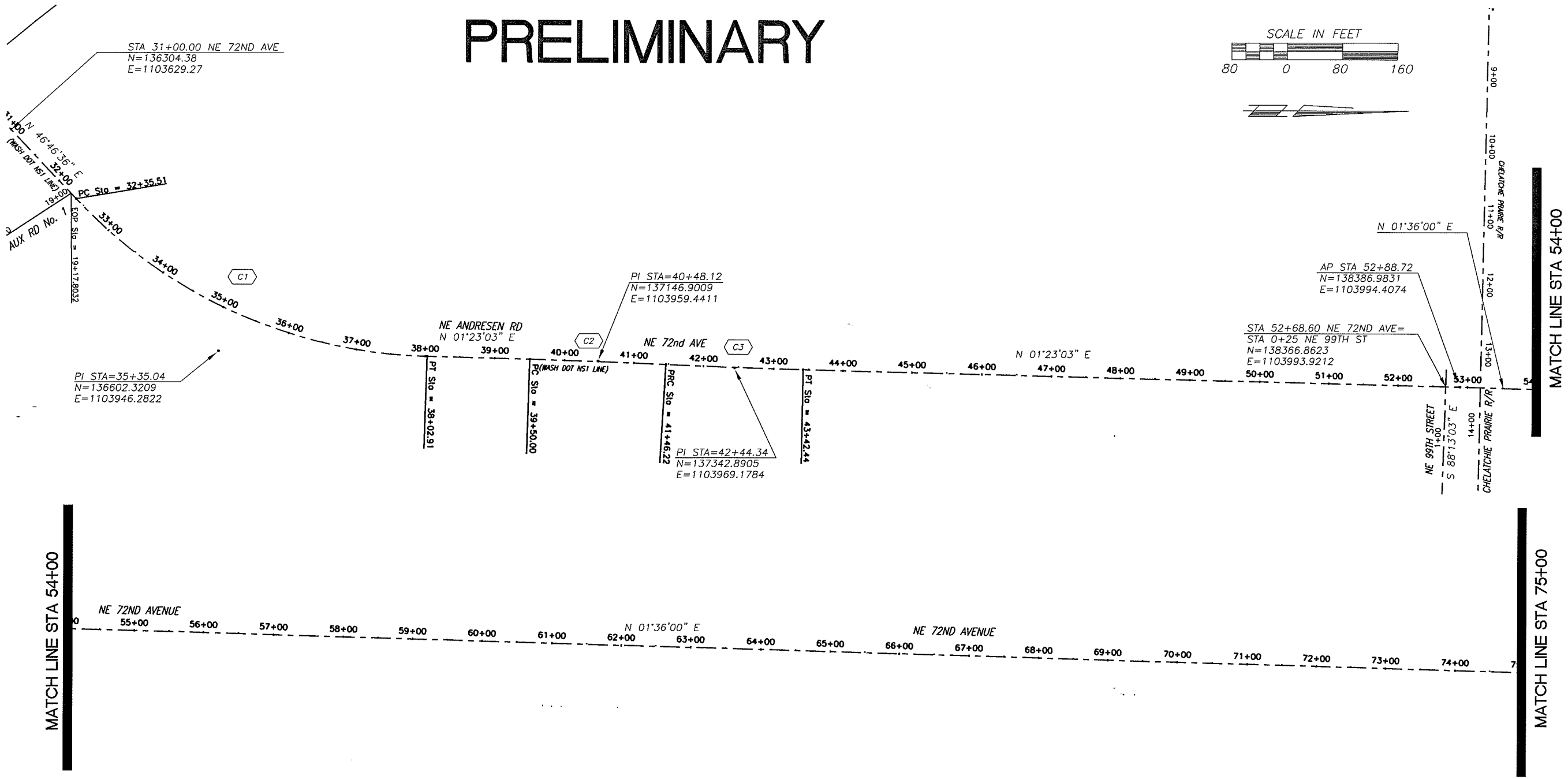

NUMBER	DELTA ANGLE	TANGENT	RADIUS	ARC LENGTH	CHORD LENGTH
C1	45°23'33"	299.54'	716.20'	567.41'	552.69'
C2	01°27'36"	98.12'	7700.00'	196.22'	196.22'
C3	01°27'36"	98.12'	7700.00'	196.22'	196.22'
C4	03°12'12"	223.69'	8000.00'	447.27'	447.21'
C5	03°12'12"	223.69'	8000.00'	447.27'	447.21'

DESIGNED	BAK
DRAWN	BAK
CRP	310122
HOR.	NA
VERT.	NA
DATE	3/28/03
DWG:	HV1
SHEET	OF

CALL 48 HOURS BEFORE YOU DIG 1-800-553-4344 "It's the Law" NORTHWEST UTILITIES NOTIFICATION CENTER

MICHAEL M. EMRICK STATE OF WASHINGTON 29630 REGISTERED PROFESSIONAL ENGINEER EXPIRES SEPT 26, 2005

DESIGN & ENGINEERING DIVISION
DESIGN SECTION

NE 72ND AVENUE
HORIZONTAL & VERTICAL CONTROL

proud past, promising future
CLARK COUNTY
WASHINGTON

N:\CIP\PROJECTS\310122-NE72Ave-H99toSTJohns\DESIGN\DWGS\HV1.dwg, Layout1, 10/20/2004 10:22:59 AM, beglevk

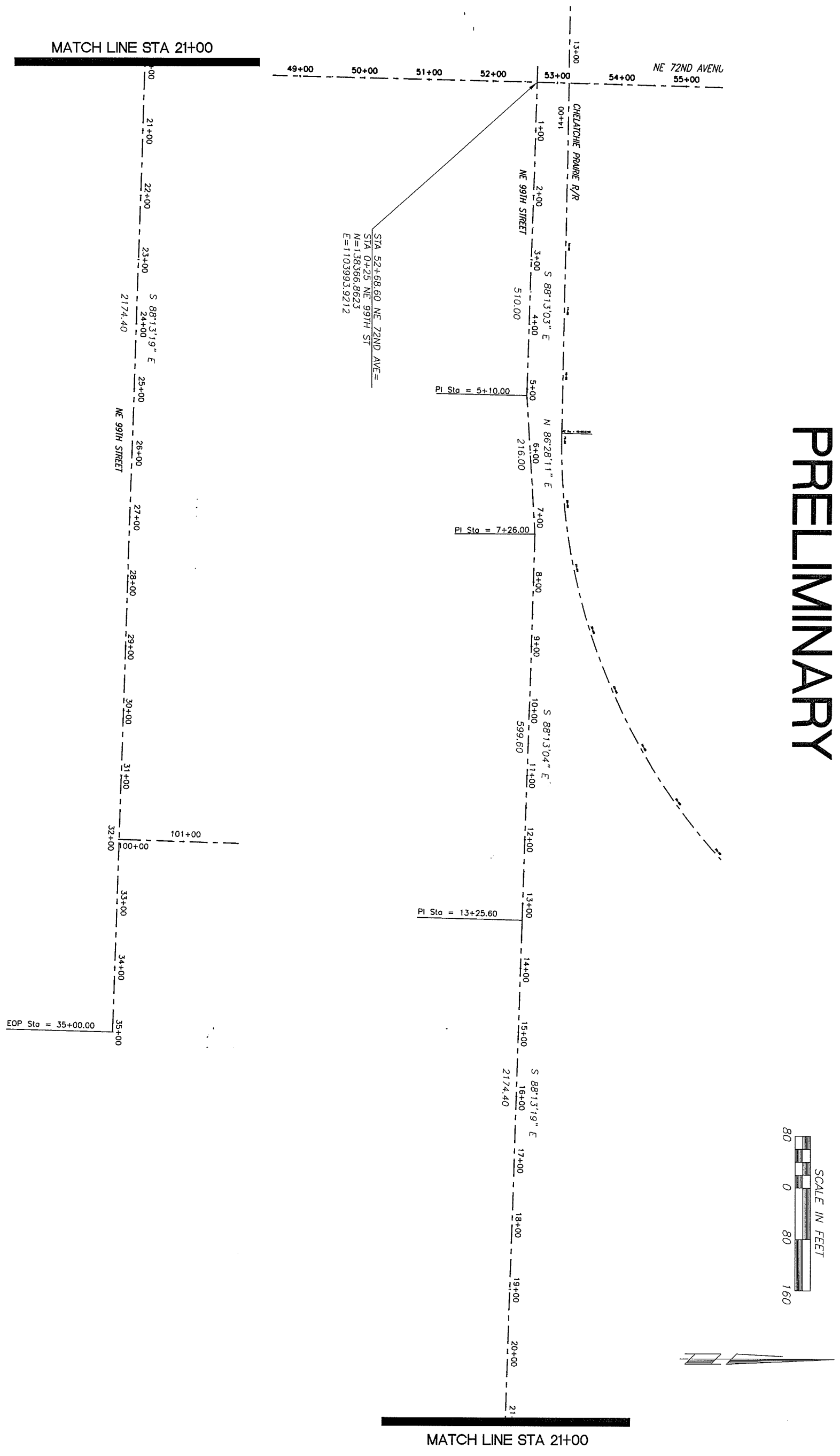

PRELIMINARY

proud past, promising future

CLARK COUNTY
WASHINGTON

DESIGN & ENGINEERING DIVISION
DESIGN SECTION

NE 72ND AVENUE
HORIZONTAL & VERTICAL CONTROL (NE 99TH ST)

MICHAEL M. ENRICK
STATE OF WASHINGTON
29030
REGISTERED
PROFESSIONAL ENGINEER
EXPIRES: MAY 26, 2005

CALL 48 HOURS BEFORE YOU DIG
1-800-553-4344
"It's the Law"
NORTHWEST UTILITIES NOTIFICATION CENTER

DESIGNED	BAK
DRAWN	BAK
CRP	310122
HOR.	NA
VERT.	NA
DATE	10/29/03
DWG:	HV2
SHEET	OF

PRELIMINARY

SCALE IN FEET

50 0 50 100

SLURRY SEAL
STA 32+75 TO STA 35+45.

MATCHLINE STA 38+00

REMOVE EXISTING STRIPING AND RPM'S. APPLY SLURRY SEAL.

MATCH LINE STA 78+00

SLURRY SEAL
STA 82+63.10 TO STA 88+50.

NE 72ND AVENUE

NE 110th ST (PRIVATE)

TO BE BUILT AS PART OF COUNTY ROAD PROJECT #301422 NE ST. JOHNS ROAD (EXCEPT MEDIAN)

NE ST JOHN'S RD

OLD NE 72nd AVE

DESIGNED	MME
DRAWN	RRK
CRP	310122
HOR.	1"=50'
VERT.	NA
DATE	10/29/04
DWG:	SSP1
SHEET	OF

CALL 48 HOURS BEFORE YOU DIG
1-800-553-4344
"It's the Law"
NORTHWEST UTILITIES NOTIFICATION CENTER

MICHAEL M. ENDICK
STATE OF WASHINGTON
21583
PROFESSIONAL ENGINEER
EXPIRES MAY 26, 2005

DESIGN & ENGINEERING DIVISION
DESIGN SECTION

NE 72ND AVENUE
SLURRY SEAL PLAN

proud past, promising future
CLARK COUNTY
WASHINGTON

N:\CIP\PROJECTS\310122-NE72Ave-H99toSTJohns\DESIGN\DWGS\SSP1.dwg, 10/27/2004 7:43:38 AM, kerlinr

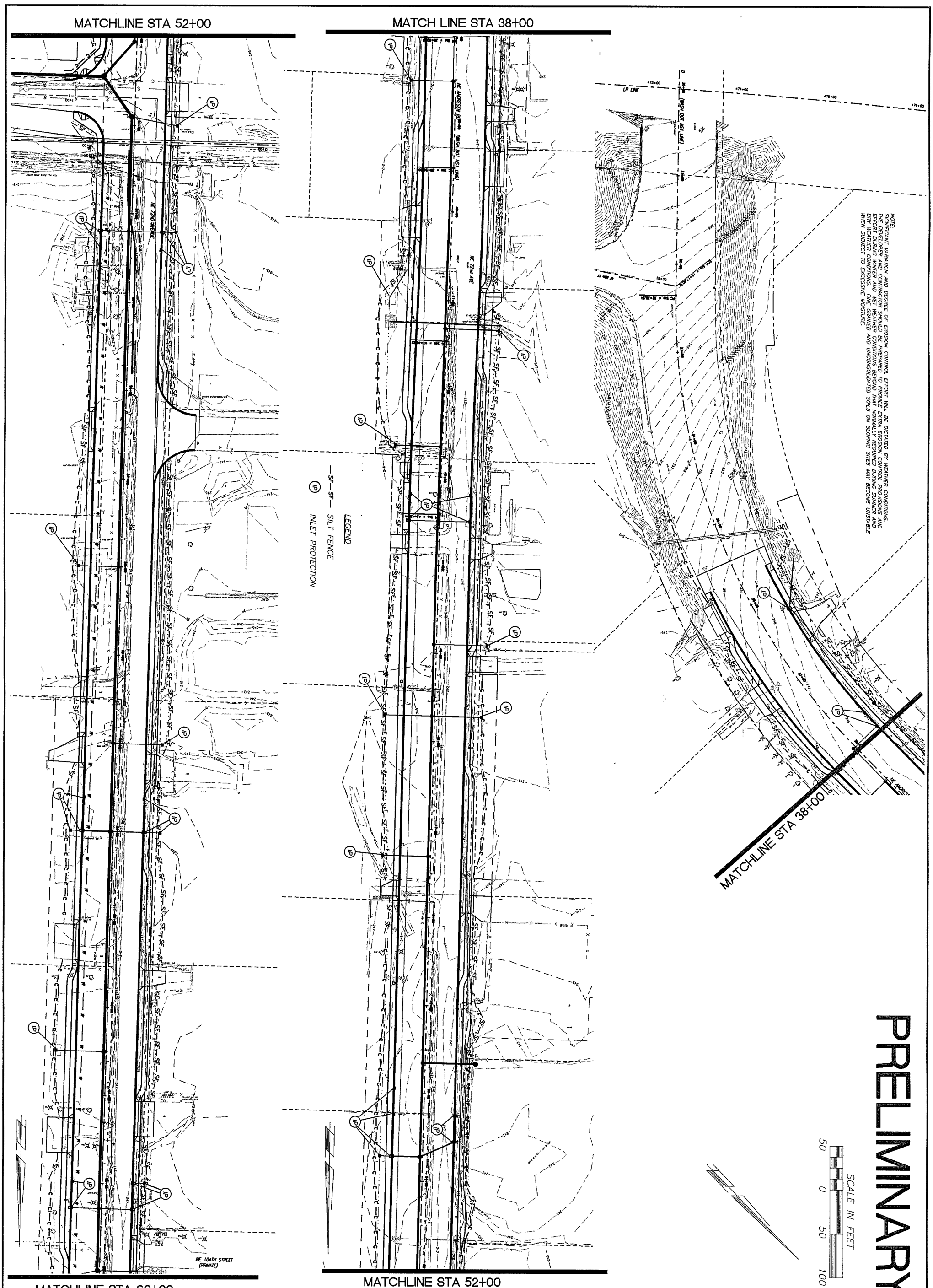

NOTE:
SIGNIFICANT VARIATION AND DEGREE OF EROSION CONTROL EFFORT WILL BE DICTATED BY WEATHER CONDITIONS. THE DEVELOPER AND CONTRACTOR SHOULD BE PREPARED TO PROVIDE EXTRA EROSION CONTROL PROVISIONS AND EFFORT DURING WINTER AND WET WEATHER CONDITIONS BEYOND THAT NORMALLY REQUIRED DURING SUMMER AND DRY WEATHER CONDITIONS. FINE GRAINED AND UNCONSOLIDATED SOILS ON SLOPING SITES MAY BECOME UNSTABLE WHEN SUBJECT TO EXCESSIVE MOISTURE.

PRELIMINARY

proud past, promising future
CLARK COUNTY
WASHINGTON

DESIGN & ENGINEERING DIVISION
DESIGN SECTION

NE 72ND AVENUE
EROSION CONTROL

MICHAEL M. EMRICK
STATE OF WASHINGTON
29930
REGISTERED
PROFESSIONAL ENGINEER
EXPIRES: MAY 26, 2005

CALL 48 HOURS BEFORE YOU DIG
1-800-553-4344
"It's the Law"
NORTHWEST UTILITIES NOTIFICATION CENTER

DESIGNED	MME
DRAWN	RRK
CRP	310122
HOR.	1"=50'
VERT.	NA
DATE	10/29/04
DWG:	EC01
SHEET	OF

NOTE:
SIGNIFICANT VARIATION AND DEGREE OF EROSION CONTROL EFFORT WILL BE DICTATED BY WEATHER CONDITIONS. THE DEVELOPER AND CONTRACTOR SHOULD BE PREPARED TO PROVIDE EXTRA EROSION CONTROL PROVISIONS AND EFFORT DURING WINTER AND WET WEATHER CONDITIONS BEYOND THAT NORMALLY REQUIRED DURING SUMMER AND DRY WEATHER CONDITIONS. FINE GRAINED AND UNCONSOLIDATED SOILS ON SLOPING SITES MAY BECOME UNSTABLE WHEN SUBJECT TO EXCESSIVE MOISTURE.

SCALE IN FEET
50 0 50 100

LEGEND
—SF—SF— SILT FENCE
(IP) INLET PROTECTION

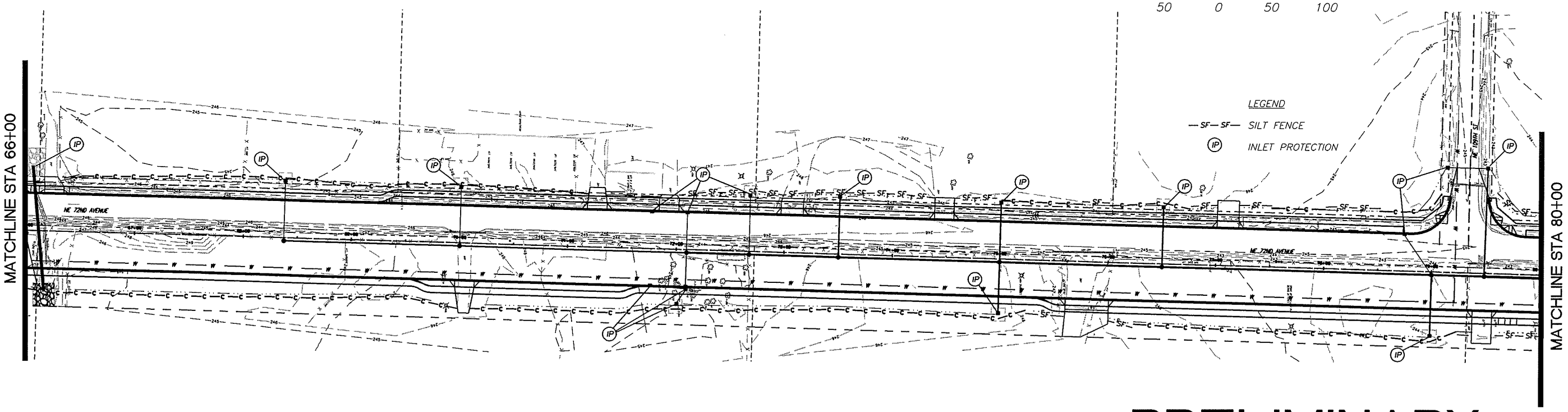

PRELIMINARY

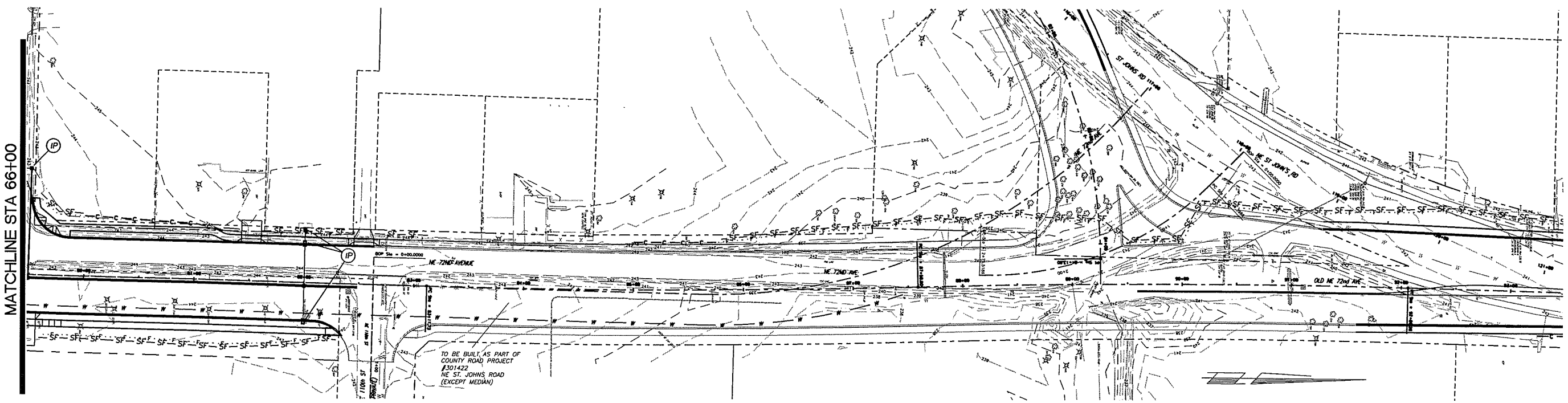

DESIGNED	MME
DRAWN	RRK
CRP	310122
HOR.	1"=50'
VERT.	NA
DATE	10/29/04
DWG:	EC02
SHEET	OF

CALL 48 HOURS BEFORE YOU DIG
1-800-553-4344
"It's the Law"
NORTHWEST UTILITIES NOTIFICATION CENTER

MICHAEL M. ENDRICK
STATE OF WASHINGTON
28030
REGISTERED PROFESSIONAL ENGINEER
EXPIRES MAY 26, 2005

DESIGN & ENGINEERING DIVISION
DESIGN SECTION

NE 72ND AVENUE
EROSION CONTROL PLAN

proud past, promising future
CLARK COUNTY
WASHINGTON

N:\CIP\PROJECTS\310122-NE72Ave-H99toSTJohns\DESIGN\DWGS\Ec01-3.dwg, EC02, 10/22/2004 3:12:03 PM, begleyk

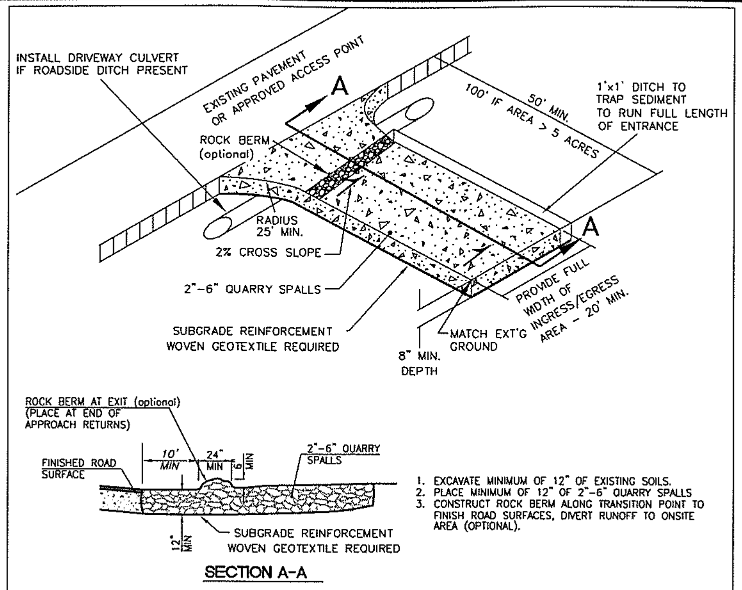

1. EXCAVATE MINIMUM OF 12" OF EXISTING SOILS.
2. PLACE MINIMUM OF 12" OF 2"-6" QUARRY SPALLS
3. CONSTRUCT ROCK BERM ALONG TRANSITION POINT TO FINISH ROAD SURFACES, DIVERT RUNOFF TO ONSITE AREA (OPTIONAL).

SECTION A-A

NOTES:

1. FOR DEVELOPMENT PROJECTS REVIEWED BY ENGINEERING SERVICES. NOT FOR USE WITH SINGLE FAMILY OR DUPLEX RESIDENTIAL BUILDING PERMITS. SEE BUILDING DEPT. FOR GRAVEL CONSTRUCTION ENTRANCE PLAN.
2. INSTALL WOVEN GEOTEXTILE FABRIC TO PREVENT SUB-SOIL PUMPING.
3. VEHICLE WASHDOWN AREA, IF REQUIRED, IS TO BE INSTALLED AND USED TO REMOVE SEDIMENT FROM VEHICLES THAT ARE ABOUT TO ENTER AN ESTABLISHED ROAD.
4. WASHDOWN AREA TO BE MADE UP OF CLEAN 2"- 6" QUARRY SPALLS, 1" DEEP (MIN) OVER WOVEN GEOTEXTILE FABRIC. WASHDOWN AREA TO BE FULL WIDTH OF ENTRANCE AND 50' (MIN.), AND 100' IF EXPOSED SOIL IS OVER 5 ACRES.
5. AT TIME OF PRECONSTRUCTION MEETING, THE COUNTY INSPECTOR MAY REQUIRE THE ENTRANCE TO BE PAVED TO THE EDGE OF THE RIGHT-OF-WAY PRIOR TO THE INSTALLATION OF A WASHDOWN ENTRANCE TO AVOID DAMAGE TO THE EXISTING ROADWAY.
6. THE RESPONSIBLE EROSION CONTROL INDIVIDUAL IS TO ENSURE THAT ALL VEHICLES USE THIS ENTRANCE AND ARE TO BE INSPECTED AND CLEANED OF SOILS BEFORE LEAVING PROJECT, AND THAT THE ENTRANCE IS TO BE KEPT CLEAN AT ALL TIMES.

NO.	REVISIONS	DATE	BY

DWG: E-1.DWG
Department of Public Works
CLARK COUNTY WASHINGTON
proud past, promising future
STANDARD CONSTRUCTION ENTRANCE
APPROVED
COUNTY ENGINEER — 01/01/04 DATE
STANDARD E-1

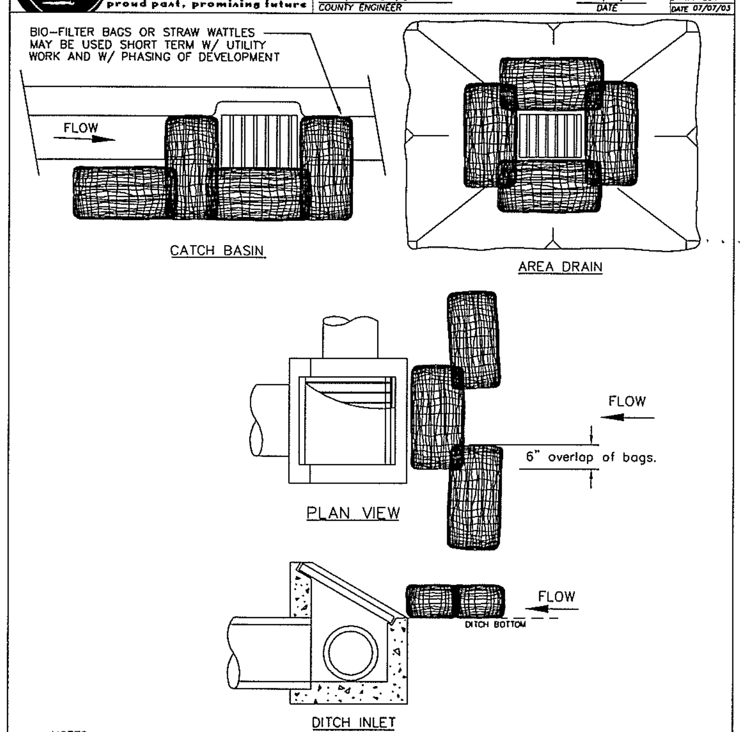

NOTES:

1. ADDITIONAL MEASURES MUST BE CONSIDERED DEPENDING ON SOIL TYPE.
2. BIO-FILTER BAGS SHOULD BE STAKED WHERE APPLICABLE USING (2) 1"x2" WOODEN STAKES OR APPROVED EQUAL PER BAG.
3. STRAW WATTLES MUST BE STABILIZED BY ATTACHING WIRE CLIPS TO THE CATCH BASIN PER MANUFACTURES SPECIFICATIONS.
4. INLET PROTECTION MUST BE REGULARLY INSPECTED BY THE EROSION CONTROL INDIVIDUAL TO INSURE PROPER PLACEMENT/FUNCTION AND MAINTENANCE.
5. SEE INLET PROTECTION NOTES STD. PLAN E-3

NO.	REVISIONS	DATE	BY

DWG: E-3c.DWG
Department of Public Works
CLARK COUNTY WASHINGTON
proud past, promising future
INLET PROTECTION TYPE 4 BIOFILTER BAGS
APPROVED
COUNTY ENGINEER — 01/01/04 DATE
STANDARD E-3c

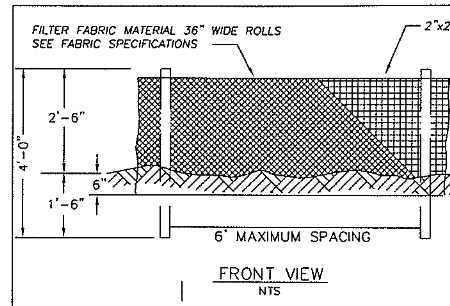

SEDIMENT FENCE FABRIC SPECIFICATIONS
(Woven Polyproylene sediment fence fabric)

PROPERTY	TEST PROCEDURE	MIN. FABRIC VALUE
Grab Tensile Strength	ASTM D-4632	180 lbs.
Grab elongation	ASTM D-4632	15%
trapezoid Tear	ASTM D-4533	70 lbs.
Mullen Burst	ASTM D-3786	300 psi.
Puncture	ASTM D-4833	80 lbs.
Permitivity	ASTM D-4491	0.07 sec-1
Permeability	ASTM D-4491	.005 cm/sec
A.O.S.	ASTM D-4751	50 U.S. Sieve
UV Resistance(500 hrs)	ASTM D-4355	90%

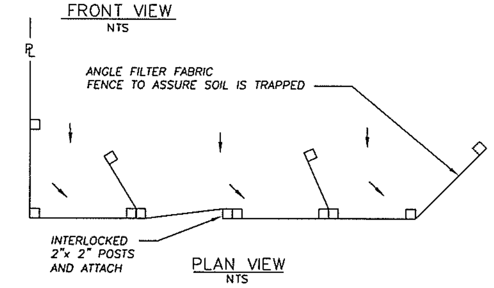

NOTES

1. THIS SEDIMENT BARRIER UTILIZES STANDARD STRENGTH OR EXTRA STRENGTH SYNTHETIC FILTER FABRICS, IT IS DESIGNED FOR SITUATIONS IN WHICH ONLY SHEET OR OVERLAND FLOWS ARE EXPECTED. (SEE FABRIC SPECIFICATIONS ABOVE)
2. BURY BOTTOM OF FILTER FABRIC 6" VERTICALLY BELOW FINISHED GRADE.
3. POST ARE TO BE 2"x2" FIR, PINE OR STEEL FENCE POSTS.
4. POST TO BE INSTALLED ON UPHILL SIDE OF SLOPE.
5. COMPACT BOTH SIDES OF FILTER FABRIC TRENCH.
6. SEDIMENT FENCE TO BE SPACED ON SLOPES PER TABLE BELOW.

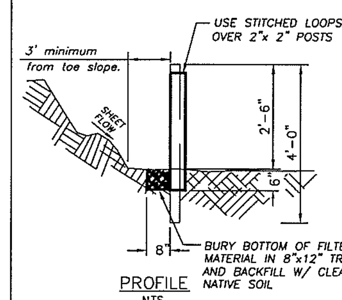

INSTALL PARALLEL ALONG CONTOURS AS FOLLOWS		
% SLOPE	SLOPE	MAX. SPACING ON SLOPE
10% FLATTER	10:1 OR FLATTER	300 ft.
10>%<15	10:1>x<7.5:1	150 ft.
15>%<20	7.5:1>x<5:1	100 ft.
20>%<30	5:1>x<3.5:1	50 ft.
30>%<50	3.5:1>x<2:1	25 ft.

NO.	REVISIONS	DATE	BY

DWG: E-4.DWG
Department of Public Works
CLARK COUNTY WASHINGTON
proud past, promising future
STANDARD SEDIMENT FENCE
APPROVED
COUNTY ENGINEER — 01/01/04 DATE
STANDARD E-4

STANDARD NOTES FOR EROSION CONTROL PLAN

1. The Contractor shall install and maintain BMP's as shown and perform all actions necessary to prevent erosion, and control sediment from leaving the construction site. Site Contractor shall comply with Clark County Code Chapter 40.380.050.

2. All erosion control measures shall be in-place and in working condition prior to disturbing and exposing any soil surfaces (i.e. silt fence, construction entrance, sedimentation barriers, sedimentation traps).

3. All erosion prevention and control BMP's shall be maintained and repaired as needed to insure continued performance of their intended function. Needed repairs shall be made as soon as practicable. They are to remain in place and operational during all phases of construction. Construction activities shall not continue or resume until repairs to erosion control facilities are made and the facilities are functional. Any sediment leaving the site or discharging to a sensitive area shall be stopped and controlled immediately. Contaminated areas shall be cleaned and restored.

4. Clearing limits and work area limits shall be delineated and marked. Do not disturb more area than needed for construction requirements.

5. All sensitive or critical areas (wetlands, steep slopes, natural waterways), and buffers shall all be clearly delineated and clearly marked, and protected from sediment deposition.
6. Sediment laden runoff shall be prevented from entering all existing storm water catch basins and inlets affected by construction.

7. No exposed, bare soils shall remain unstabilized for more than two days during the period October 1 thru April 30 or for more than seven days during the period of May 1 through September 30. All disturbed soil surfaces shall be stabilized by a suitable application of "Best Management Practices".

8. Where feasible, no more than 500 feet of trench shall be open at one time. Excavated material shall be placed on the up-hill side of trenches provided it does not conflict with safety requirements.

9. Dewatering devices shall discharge into a sediment trap or sediment pond. No discharge shall be made to a paved street or stormwater collection system without first removing sediment.

10. Cut and fill slopes shall be constructed in a manner that will minimize erosion. Erosion shall be controlled and prevented by such measures as roughening the surface, installation of interceptor ditches, terracing, covering with matting, mulch or plastic sheeting. Runoff shall be prevented from entering a slope and from undercutting the base of slopes.

11. Any soil or debris transported onto roadways and sidewalks shall be removed. Deposits shall be completely removed by shoveling and/or sweeping. Washing shall not be utilized unless specifically approved in writing by the County.

12. All permanent infiltration systems shall be isolated and protected from sediment laden runoff entering to avoid risk of reducing the ability of the systems to infiltrate. Isolation and protection shall not be removed until the drainage area tributary to the system is completely stabilized.

CONTINUED ON SHEET 2

NO.	REVISIONS	DATE	BY

DWG: ECN1.DWG
Department of Public Works
CLARK COUNTY WASHINGTON
proud past, promising future
STANDARD NOTES FOR EROSION CONTOL PLAN
APPROVED
COUNTY ENGINEER — 01/01/04 DATE
STANDARD ECN1

STANDARD NOTES FOR EROSION CONTROL PLAN (CONTINUED)

13. All conveyance channels, both temporary and permanent shall be stabilized to prevent erosion of the channel. Stabilization shall extend to areas at outlets and downstream reaches vulnerable to erosion resulting from flow discharging from the channel.

14. If BMP's shown are utilized but are insufficient to prevent sediment from reaching water bodies, adjacent properties, or public rights-of-way; additional BMP's shall be implemented immediately to prevent further encroachment of sediment.

15. Stabilized areas shall be provided for employee parking and storage of construction materials. Erodeable stockpiles of earthen materials, such as topsoil, silty and clayey soils; and landscape materials, shall be covered when not being incorporated in the work. Erosion control BMP's shall be utilized as necessary to prevent sediment laden runoff from leaving or sediment being transported from these areas from vehicle activity.

16. All pollutants other than sediment that occur during construction shall be handled and disposed of in a manner that does not cause contamination of storm water.

17. The Contractor shall keep an inspection log of the condition of the erosion control facilities. Erosion control facilities shall be inspected at least weekly and after each rainfall. The inspection log shall be kept at the project site at a designated location and shall be available for review by the County. An individual that has successfully completed the County's Erosion Control Certification course shall perform inspections and maintain the log.

18. All temporary BMP's shall be removed within 30 days after final site stabilization is achieved. Trapped sediment shall be deposited and stabilized on site. Areas disturbed resulting from removal shall be permanently stabilized.

19. Construction shall not be considered complete and acceptable until all disturbed soil surfaces have been protected from erosion with permanent landscaping, covering with impervious surfaces, restored to original undisturbed condition or permanently stabilized.

20. Vegetated stabilization and landscaping shall be fertilized, watered and maintained to insure that growth of vegetation is established and sustained.

21. During dry weather construction periods the contractor shall provide project-specific dust control measures that may include: Seeding, Mulching, Matting, Water, Tackifier, or Chemical Soil Stabilizers. The contractor shall maintain the dust control measures through dry weather periods until all disturbed areas have been stabilized. Immediately re-stabilize areas disturbed by contractor's operations or other activities (wind, water, vandalism, etc.).

22. Entry onto the construction site shall be restricted to a single approved entrance as shown on the plan.

23. Maintenance and repair of heavy equipment and vehicles which involve potential contaminants (oil,solvents,hydraulic fluid, etc.) must be conducted in a manner which prevents contamination of soils, surface water and ground water. Tarps, drip pans, or other appropriate measures shall be used as necessary.

24. Stripping, topsoil, and unsuitable material stockpiles shall be hydroseeded with "regreen wheat x wheat grass hybrid" by Hobbs and Hobkins (or approved equal). Maintenance of stockpile areas and reapplication of hydroseed covering shall be required if bare soil is present. During winter and wet weather conditions, stockpiles shall be covered with plastic sheeting per detail E-16.

SHEET 2 OF 2

NO.	REVISIONS	DATE	BY

DWG: ECN2.DWG
Department of Public Works
CLARK COUNTY WASHINGTON
proud past, promising future
STANDARD NOTES (CONTINUED) FOR EROSION CONTOL PLAN
APPROVED
COUNTY ENGINEER — 01/01/04 DATE
STANDARD ECN2

PRELIMINARY

CLARK COUNTY WASHINGTON
proud past, promising future

DESIGN & ENGINEERING DIVISION
DESIGN SECTION

NE 72ND AVENUE
EROSION CONTROL DETAILS & NOTES

MICHAEL M. EMRICK, STATE OF WASHINGTON, 29030, REGISTERED PROFESSIONAL ENGINEER
EXPIRES MAY 26, 2005

CALL 48 HOURS BEFORE YOU DIG
1-800-553-4344
"It's the Law"
NORTHWEST UTILITIES NOTIFICATION CENTER

DESIGNED	MME
DRAWN	KB
CRP	310122
HOR.	NA
VERT.	NA
DATE	6/20/03
DWG:	EC03
SHEET	OF

NEW CONSTRUCTION
FOR USE WITH SIDEWALKS LOCATED ANYWHERE IN THE RIGHT-OF-WAY

NOTES:

1. RAMPS TO BE POURED SEPARATELY FROM SIDEWALK.
2. CROSSWALKS TO BE CENTERED ON SIGNAL POLE TO POLE CENTERLINES. CURB RAMP TO BE CENTERED WITHIN CROSSWALK.
3. SIDEWALK SLOPE TO BE 2% MAXIMUM RADIALLY AROUND CORNER SECTION. SINGLE RAMPS CAN BE INSTALLED.
4. RAMP SLOPES SHALL NOT BE STEEPER THAN 12H:1V.

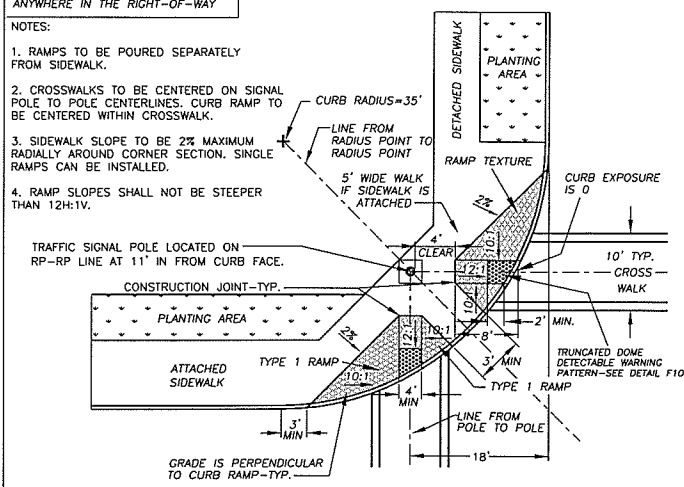

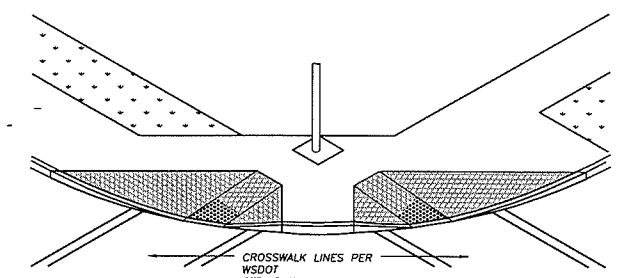

NO.	REVISIONS	DATE	BY
1	TRUNCATED DOMES	6/14/03	SCH

DWG: F2.dwg

Department of Public Works
CLARK COUNTY
WASHINGTON
proud past, promising future

TYPE 2 RAMP

APPROVED
PETER CAPELLI
COUNTY ENGINEER
8/22/00
DATE

F2

DESIGNED DB
DRAWN KB
DATE 7/24/00

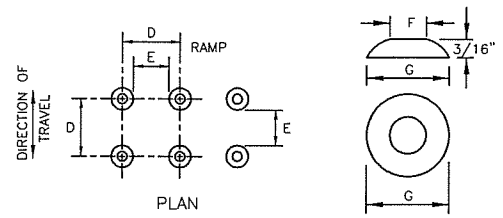

PLAN

TRUNCATED DOME DETAIL

	MIN.	MAX.
D	1 5/8"	2 3/8"
E	5/8"	1 1/2"
F	7/16"	3/4"
G	7/8"	1 7/16"

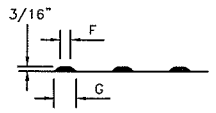

ELEVATION

TRUNCATED DOMES (SEE NOTE 2)
DETECTABLE WARNING
PATTERN DETAIL

NOTES

1. AVOID PLACING DRAINAGE STRUCTURES, JUNCTION BOXES OR OTHER OBSTRUCTIONS IN FRONT OF RAMP ACCESS AREA.
2. THE DETECTABLE WARNING PATTERNS CAN BE CREATED BY ACCEPTABLE MEANS THAT WILL ACHIEVE THE TRUNCATED DOME DIMENSIONS AND SPACING SHOWN.
3. PLACE TRUNCATED DOME DETECTABLE WARNING TEXTURE IN THE LOWER 24" OF THE THROAT OF THE RAMP ONLY. ARRANGE DOMES USING IN-LINE PATTERN ONLY AS SHOWN. COLOR OF TEXTURE (COATING) SHALL BE SAFETY YELLOW IN COMPLIANCE WITH WSDOT STD. SPEC. OR AS INSTRUCTED BY COUNTY INSPECTOR.
4. FOR CONSTRUCTION OF SIDEWALK RAMPS OUTSIDE OF PUBLIC RIGHT-OF-WAY, CHECK WITH STATE BUILDING CODES.

NO.	REVISIONS	DATE	BY

DWG: F10.DWG

Department of Public Works
CLARK COUNTY
WASHINGTON
proud past, promising future

TRUNCATED DOME DETECTABLE WARNING PATTERN

APPROVED
PETER CAPELLI
COUNTY ENGINEER
01/01/04
DATE

STANDARD
F10
PLAN No.

DESIGNED SCH
DRAWN SCH
DATE 6/15/03

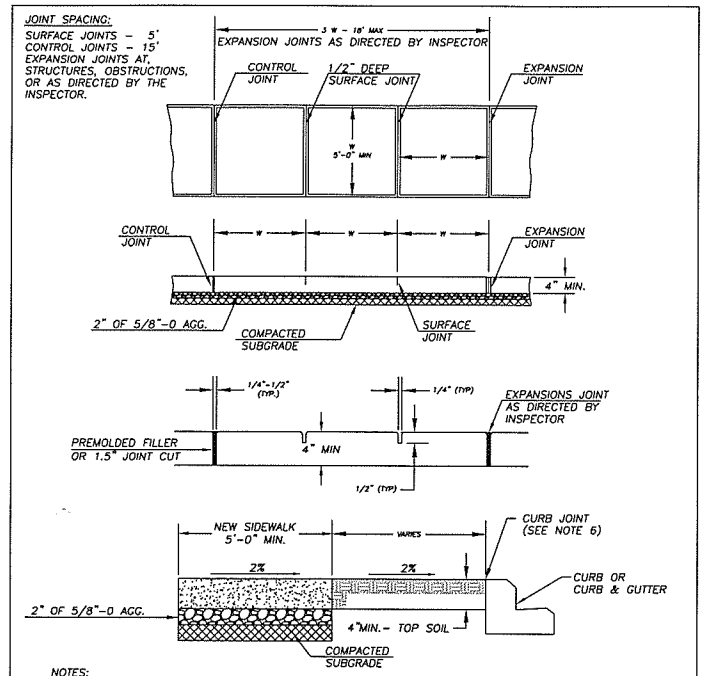

NOTES:

1. CONCRETE SHALL BE 3,000 PSI MIN. (CLASS 3000). 3 1/2" SLUMP (± 1") .
2 FINISH SHALL BE MEDIUM BROOM PERPENDICULAR TO PEDESTRIAN TRAFFIC UNLESS OTHERWISE DIRECTED.
3. ALL EXISTING EDGES SHALL BE SAWCUT.
4. NO FILLER REQUIRED FOR SURFACE JOINTS.
5. ALL JOINTS AND EDGES SHALL BE FINISHED WITH 1/4" RADIUS EDGER (3" SMOOTH EACH SIDE)
6. FOR SIDEWALKS ADJACENT TO THE CURB AND POURED AT THE SAME TIME AS THE CURB, THE JOINT BETWEEN THEM SHALL BE A TROWELED JOINT WITH A MIN. 1/2" RADIUS.

NO.	REVISIONS	DATE	BY
1	CHANGE SUBGRADE &	03/28/02	KB
2	In 3 BASE AGG. & NOTES	10/07/02	SCH

DWG: F12.dwg

Department of Public Works
CLARK COUNTY
WASHINGTON
proud past, promising future

SIDEWALK DETAIL

APPROVED
PETER CAPELLI
COUNTY ENGINEER
01/01/04
DATE

STANDARD
F12
PLAN No.

DESIGNED DB
DRAWN KB
DATE 10/08/02

NOTES:

1. A MINIMUM 3' WIDE ACCESSIBLE ROUTE SHALL BE MAINTAINED IN ALL PEDESTRIAN ACCESSIBLE AREAS.
2. CONTRACTION POINTS SHALL BE PLACED ALONG SIDEWALKS IN ACCORD WITH SIDEWALK DETAIL. ALL JOINTS SHALL BE CLEANED AND EDGED.
3. CHANGES IN LEVEL UP TO 1/4" MAY BE VERTICAL AND WITHOUT EDGE TREATMENT. CHANGES IN LEVEL BETWEEN 1/4" AND 1/2" SHALL BE BEVELED WITH A SLOPE NO GREATER THAN 2:1.
4. CEMENT CONCRETE APPROACHES SHALL BE CONSTRUCTED OF AIR-ENTRAINED CLASS 3000 AND MAY BE POURED INTEGRAL WITH CURB.
5. EXISTING CURB, GUTTER, AND SIDEWALK TO BE SAWCUT AND REMOVED FOR INSTALLATION OF APPROACH.
6. COMMERCIAL DRIVEWAY REQUIRES REINFORCING STEEL (6"x6" 10 GA WIRE MESH) MIN. 3" COVER.
7. 3" DEPTH 3/4"-0 CRUSHED AGGREGATE BASE COMPACTED TO 95% OF MAX. DRY DENSITY.
8. SUBGRADE PREPARATION PER WSDOT STD. SPEC. 2-06.3(1).

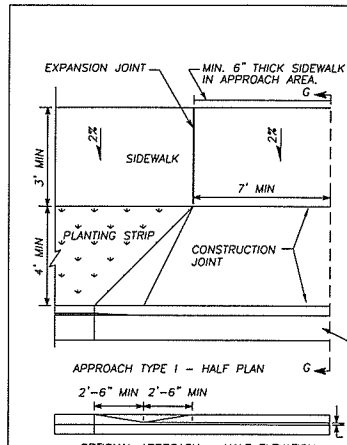

NOTE: USE TYPE 1 APPROACH ONLY WHEN A SIDEWALK IS USED AT THE BACK OF THE APPROACH.

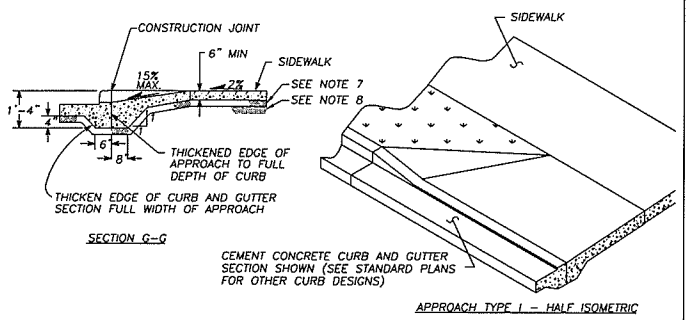

NO.	REVISIONS	DATE	BY
1	NOTE #6	10/09/02	SCH

DWG: F14.dwg

Department of Public Works
CLARK COUNTY
WASHINGTON
proud past, promising future

DETAIL - TYPE 1 CEMENT CONCRETE APPROACH

APPROVED
PETER CAPELLI
COUNTY ENGINEER
8/22/00
DATE

F14

DESIGNED DB
DRAWN KB
DATE 7/24/00

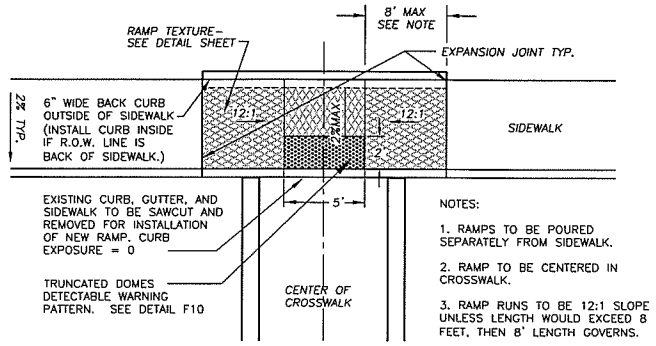

NOTES:

1. RAMPS TO BE POURED SEPARATELY FROM SIDEWALK.
2. RAMP TO BE CENTERED IN CROSSWALK.
3. RAMP RUNS TO BE 12:1 SLOPE UNLESS LENGTH WOULD EXCEED 8 FEET, THEN 8' LENGTH GOVERNS.
4. BACK CURB IS STANDARD BARRIER CURB.

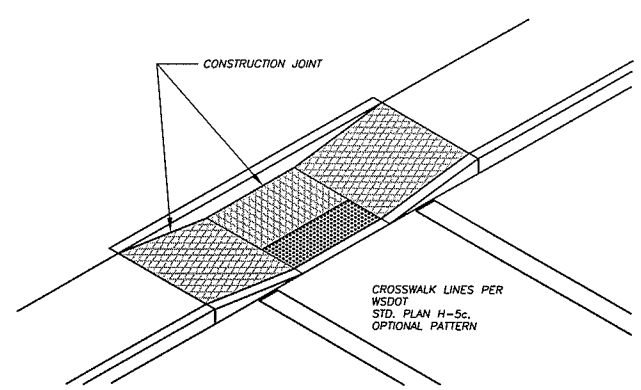

NO.	REVISIONS	DATE	BY
1	TRUNCATED DOME PATTERN	6/15/03	SCH

DWG: F3.dwg

Department of Public Works
CLARK COUNTY
WASHINGTON
proud past, promising future

TYPE 3 RAMP

APPROVED
PETER CAPELLI
COUNTY ENGINEER
8/22/00
DATE

F3

DESIGNED DB
DRAWN KB
DATE 7/24/00

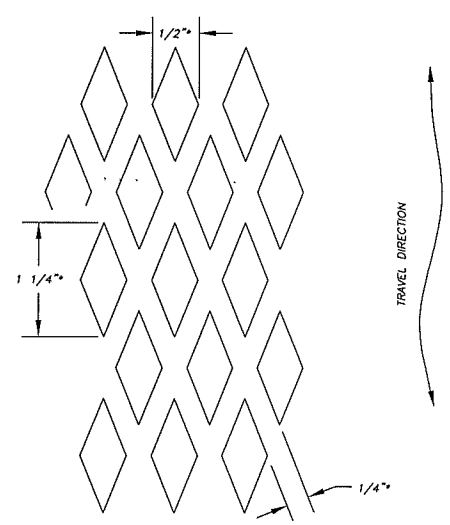

* NOMINAL DIMENSIONS

RAMP TEXTURE DETAIL

RAMP TEXTURE IS TO BE DONE WITH AN EXPANDED METAL GRATE PLACED AND REMOVED FROM WET CONCRETE TO LEAVE A DIAMOND PATTERN AS SHOWN. THE LONG AXIS OF THE DIAMOND PATTERN SHALL BE IN THE DIRECTION OF TRAVEL. GROOVES SHALL BE 1/8" DEEP AND 1/4" WIDE. ALTERNATIVE TEXTURE PATTERNS SHALL BE APPROVED BY REVIEWING AUTHORITY BEFORE USE.

NO.	REVISIONS	DATE	BY

DWG: F11.dwg

Department of Public Works
CLARK COUNTY
WASHINGTON
proud past, promising future

RAMP TEXTURE DETAIL

APPROVED
PETER CAPELLI
COUNTY ENGINEER
8/22/00
DATE

F11

DESIGNED DB
DRAWN KB
DATE 7/24/00

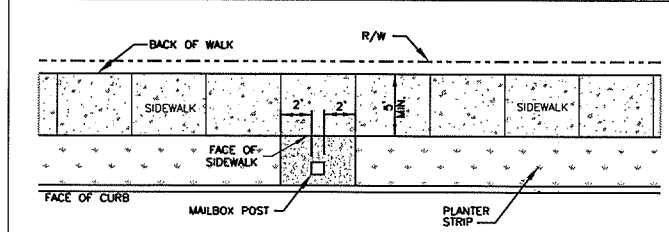

MAILBOX IN PLANTER STRIP

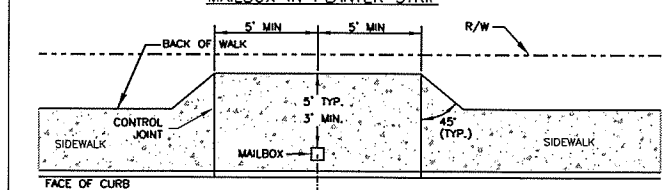

MAILBOX IN SIDEWALK

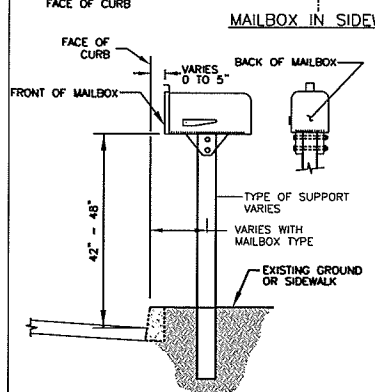

NOTES:

1. SEE CURRENT WSDOT STANDARD PLAN No. H-12 FOR MAILBOX, POST, BRACKET AND OTHER INSTALLATION DETAILS.
2. MAILBOXES MUST BE POSTMASTER APPROVED. CONTACT MIKE WENTZEL (MAINTENANCE MANAGER) AT 992-5052.
3. LOCATION OF MAILBOXES ARE SUBJECT TO APPROVAL BY COUNTY ENGINEERING FOR ACCESS AND SIGHT DISTANCE REQUIREMENTS. CONTACT ENGINEERING SERVICES AT 397-2375 ext. 4997
4. INSTALL EXPANSION JOINT MATERIAL AROUND MAILBOX POST WHEN SET IN SIDEWALK.
5. EXTEND SIDEWALK JOINTS THROUGH WIDENED SIDEWALK SECTION.
6. COLLECTION BOX UNITS (CBU) AND CONCRETE BASE ARE INSTALLED BY THE U.S. POSTAL SERVICE. SEE NOTE 2 FOR CONTACT.
7. A MAILBOX TURNOUT CONFORMING TO DETAIL F13b IS REQUIRED FOR ALL STREETS EXCEPT ACCESS AND SUBCOLLECTOR STREETS WHERE THE POSTED SPEED LIMIT IS 25 MPH OR LESS.

WSDOT STD. PLANS WEB SITE ADDRESS:
http://www.wsdot.wa.gov/eesc/design/designstandards/HTM/TOC.pdf

NO.	REVISIONS	DATE	BY

DWG: F13.DWG

Department of Public Works
CLARK COUNTY
WASHINGTON
proud past, promising future

SIDEWALK MAILBOX PLACEMENT

APPROVED
PETER CAPELLI
COUNTY ENGINEER
01/01/04
DATE

STANDARD
F13
PLAN No.

DESIGNED SCH
DRAWN SCH
DATE 07/31/02

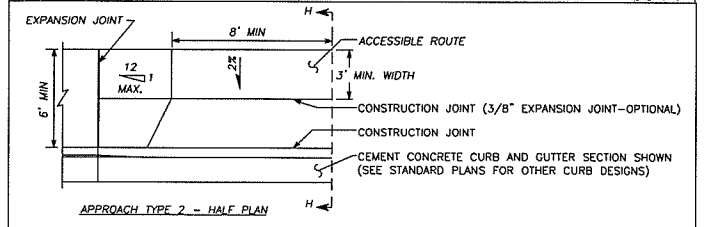

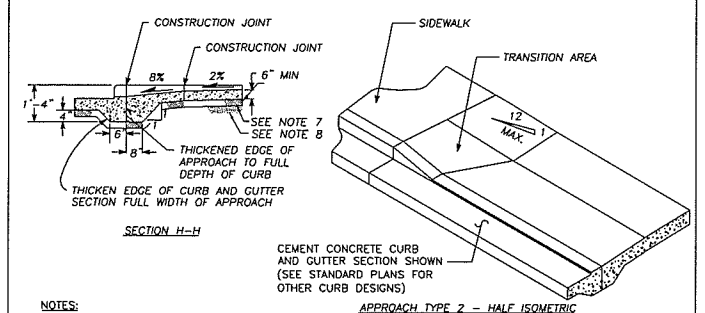

NOTES:

1. A MINIMUM 3' WIDE ACCESSIBLE ROUTE SHALL BE MAINTAINED IN ALL PEDESTRIAN ACCESSIBLE AREAS.
2. CONTRACTION JOINTS SHALL BE PLACED ALONG SIDEWALKS IN ACCORD WITH SIDEWALK DETAIL. ALL JOINTS SHALL BE CLEANED AND EDGED.
3. CHANGES IN LEVEL UP TO 1/4" MAY BE VERTICAL AND WITHOUT EDGE TREATMENT. CHANGES IN LEVEL BETWEEN 1/4" AND 1/2" SHALL BE BEVELED WITH A SLOPE NO GREATER THAN 2:1.
4. CEMENT CONCRETE APPROACHES SHALL BE CONSTRUCTED OF AIR-ENTRAINED CONCRETE CLASS 3000 AND MAY BE POURED INTEGRAL WITH CURB.
5. EXISTING CURB, GUTTER AND SIDEWALK TO BE SAWCUT AND REMOVED FOR INSTALLATION OF APPROACH.
6. COMMERCIAL DRIVEWAY REQUIRES REINFORCING STEEL (6"x6" 10 GA WIRE MESH) MIN. 3" COVER
7. 3" DEPTH 3/4"-0 CRUSHED AGGREGATE BASE COMPACTED TO 95% OF MAX. DRY DENSITY.
8. SUBGRADE PREPARATION PER WSDOT STD. SPEC. 2-06.3(1).

NO.	REVISIONS	DATE	BY
1	NOTES #6, 7, 8	10/09/02	SCH

DWG: F15.DWG

Department of Public Works
CLARK COUNTY
WASHINGTON
proud past, promising future

CEMENT CONCRETE APPROACH DETAIL - TYPE 2

APPROVED
PETER CAPELLI
COUNTY ENGINEER
8/22/00
DATE

F15

DESIGNED DB
DRAWN KB
DATE 7/24/00

DESIGNED	JM
DRAWN	BAK
CRP	310122
HOR.	NA
VERT.	NA
DATE	6/20/03
DWG:	RD1
SHEET	OF

CALL 48 HOURS BEFORE YOU DIG
1-800-553-4344
"It's the Law"
NORTHWEST UTILITIES NOTIFICATION CENTER

STATE OF WASHINGTON
RAFAEL M. ESCRICK
22040
REGISTERED PROFESSIONAL ENGINEER
EXPIRES: MAY 28, 2005

DESIGN & ENGINEERING DIVISION
DESIGN SECTION

NE 72ND AVENUE
ROADWAY DETAILS I

proud past, promising future
CLARK COUNTY
WASHINGTON

N:\CIP\PROJECTS\310122-NE72Ave-H99toST Johns\DESIGN\DWGS\RD1-2.dwg, Layout1, 10/20/2004 10:32:22 AM, begleyk

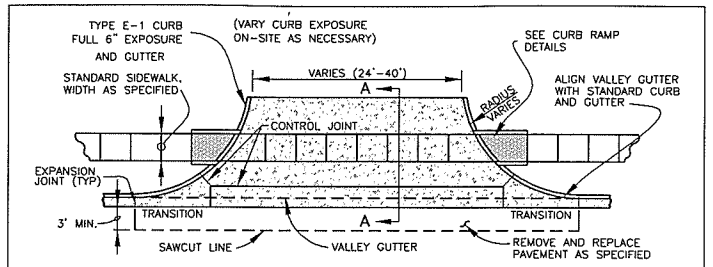

PLAN VIEW
COMMERCIAL DRIVEWAY ENTRANCE

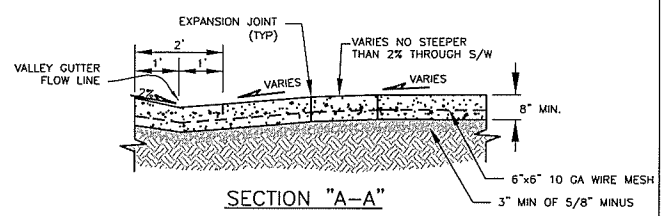

SECTION "A-A"

NOTES:

1. CONCRETE SHALL BE 3300 PSI (MIN. BREAKING STRENGTH @ 28 DAYS) WITH 3" SLUMP (±1"). TOTAL AIR CONTENT (% BY VOLUME OF CONCRETE) SHALL NOT BE LESS THAN 4% OR MORE THAN 7%. MEDIUM BROOM FINISH PARALLEL TO DRIVEWAY CENTERLINE.
2. ALL JOINTS SHALL BE FINISHED WITH 1/4" RADIUS EDGE UNLESS OTHERWISE NOTED.
3. DRIVEWAYS EXCEEDING 15' IN TOTAL WIDTH SHALL HAVE ADDITIONAL LONGITUDINAL JOINTS AS DIRECTED. CONTROL JOINT SPACING SHALL NOT EXCEED 15'.
4. DRIVEWAY SHALL BE CONSTRUCTED WITH REINFORCING STEEL (6x6 10 GA WIRE MESH), MIN. 3" COVER.
5. ALL EXISTING EDGES SHALL BE SAW CUT.
6. 3" DEPTH 5/8"-0 CRUSHED AGGREGATE BASE COMPACTED TO 95% OF MAX. DRY DENSITY.
7. SUBGRADE PREPARATION PER WSDOT STD. SPEC. 2-06.3(1).
8. EXISTING CURB SHALL BE REMOVED TO EXISTING JOINT OR SAWCUT SUCH THAT 3' MIN. OF NEW STREET SECTION IS CONSTRUCTED ADJACENT TO NEW DRIVEWAY.
9. MAXIMUM 2% CROSS SLOPE ACROSS PEDESTRIAN CROSSING.
10. CURB RADIUS PER TABLES 40.350.030-2 THRU 6, OR AS APPROVED BY COUNTY ENGINEER.

NO.	REVISIONS	DATE	BY

DWG: F17.DWG

Department of Public Works
CLARK COUNTY
WASHINGTON
proud past, promising future

MAJOR COMMERCIAL CONCRETE APPROACH

APPROVED
Peter Capen
COUNTY ENGINEER
01/01/04
DATE

F17
DESIGNED SCH
DRAWN SCH
DATE 07/18/03

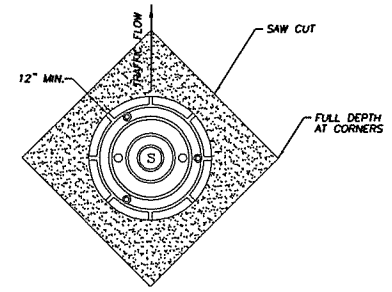

PLAN VIEW

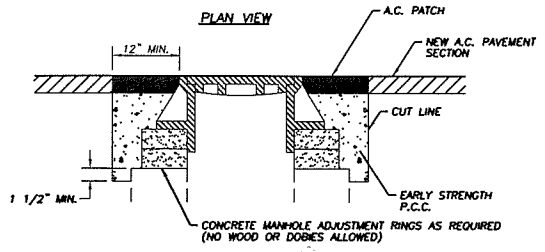

STEPS 2,3, & 4

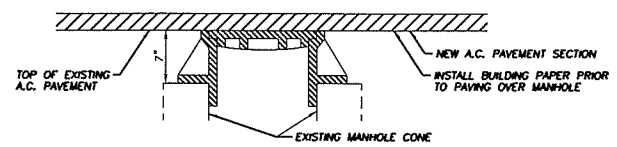

STEP 1

STEP 1 COVER EXISTING MANHOLE WITH BUILDING PAPER AND CONSTRUCT A.C. PAVEMENT OVER TOP OF MANHOLE.
STEP 2 SAW CUT AND REMOVE PAVEMENT AROUND MANHOLE 12" MIN. FROM MANHOLE FRAME.
STEP 3 RAISE MANHOLE FRAME AND COVER USING CONCRETE RINGS AND MECHANICAL ADJUSTMENT DEVICES TO FINISH GRADE MATCHING PROFILE AND CROSS SLOPE.
STEP 4 BACKFILL WITH EARLY STRENGTH P.C.C. AND A.C. TO DEPTHS AS DIRECTED.

NO.	REVISIONS	DATE	BY

DWG:

Department of Public Works
CLARK COUNTY
WASHINGTON
proud past, promising future

APPROVED
Peter Capen
COUNTY ENGINEER
9/12/00
DATE

F27
DESIGNED
DRAWN
DATE

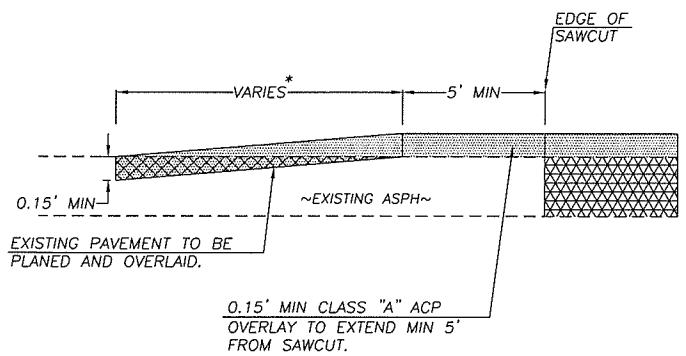

* LENGTH VARIES TO MAKE SMOOTH TRANSITION TO EXISTING ROAD GRADE. (MINIMUM 15 FEET)

TO BE USED AS AN ALTERNATIVE IN LIEU OF FULL LANE REMOVAL AND REPLACEMENT WHEN APPROVED BY CLARK COUNTY.

NO.	REVISIONS	DATE	BY
1	NOTE	03/02/011	BK
2	FIG 7	03/02/011	DS
3	CHANGED ACP CLASS	03/28/021	KB

DWG: U7.DWG

Department of Public Works
CLARK COUNTY
WASHINGTON
proud past, promising future

BUTT JOINT PLANING AND OVERLAY DETAIL

APPROVED
Peter Capen
COUNTY ENGINEER
9/20/02
DATE

STANDARD
U7
PLAN No.
DESIGNED
DRAWN
DATE 3/28/02

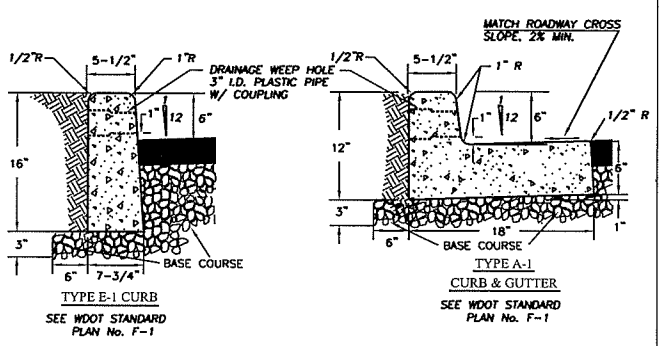

NOTES

1. CONCRETE SHALL BE 3000 PSI MIN. (CLASS 3000) 3 1/2" SLUMP (MAX.)
2. CURBS ADJACENT TO PAVEMENT OR SIDEWALK TO HAVE EXPANSION AND/OR CONTRACTION JOINTS TO MATCH EXISTING PATTERNS.
3. 3/8" EXPANSION JOINTS TO BE PROVIDED AT EACH POINT OF TANGENCY OF THE CURB, COLD JOINTS, EACH SIDE OF INLET STRUCTURES AND DRIVEWAYS. MATERIAL TO BE PRE-MOLDED, ASPHALT IMPREGNATED AND NON EXTRUDING.
4. CONTRACTION JOINT SPACING NOT TO EXCEED 15 FEET. THE DEPTH OF THE JOINT SHALL BE AT LEAST 1-1/2 INCHES. WEEP HOLES TO BE CENTERED WITH CONTRACTION JOINTS.
5. BASE COURSE SHALL BE TO SUBGRADE OF STREET SECTION OR 3 INCHES, WHICHEVER IS GREATER, AND SHALL EXTEND 6" BEHIND THE CURB.
6. DRAINAGE WEEP HOLES TO BE 3" I.D. PLASTIC PIPE WITH COUPLING. FINISH PIPE END FLUSH WITH FACE OF CURB.
7. GROUT ANY VOIDS IN CONCRETE SURROUNDING PIPE.
8. DRAINAGE ACCESS THROUGH EXISTING CURBS SHALL BE CORE DRILLED.
9. CURB TO BE BRUSH FINISHED. ALL EXISTING EDGES SHALL BE SAWCUT.
10. ALL MATERIALS AND WORKMANSHIP FOR TYPE E-1 & A-1 SHALL BE IN ACCORDANCE WITH WDOT STANDARD PLAN No. F-1, APPROVED 7/18/97 OR MOST CURRENT REVISION.

NO.	REVISIONS	DATE	BY

DWG: F18.DWG

Department of Public Works
CLARK COUNTY
WASHINGTON
proud past, promising future

CONCRETE CURBS

APPROVED
Peter Capen
COUNTY ENGINEER
01/01/04
DATE

STANDARD
F18
PLAN No.
DESIGNED SCH
DRAWN SCH
DATE 07/22/02

OPEN CUT UTILITY TRENCH BACKFILL DETAIL (COLLECTOR OR ARTERIAL)

SURFACING:

1. All A.C.P. shall be saw cut to provide a straight, clean edge prior to paving.
2. The cut line shall be one continuous straight line from the outer excavation limits of manhole, valve box, etc. to manhole, valve box, etc.
3. Pave with an 0.5 ft. minimum compacted depth A.C.P., or match existing or design section, whichever is greater.
4. Lifts for A.C.P. (Class A) shall be 0.15 ft. minimum and 0.35 ft. maximum for non-surface lifts (0.25' maximum for surface lift); the temperature shall be 250 degree minimum, 350 degree maximum, compacted to 92% of the theoretical maximum.
5. All joints shall be tacked, sealed and sanded.
6. Trench shall be plated until paved.
7. For longitudinal installation, full lane width including turn lanes restoration shall be required or as directed by Clark County. For transverse installation refer to surfacing restoration of detail U6. See Section 12.20A.120.C.

BASE COURSE:

1. 0.80 ft. minimum depth (1-1/4" minus) C.S.B.C. (W.S.D.O.T. approved material).
2. Compacted to 95% of maximum density. See trench zone.
3. Equivalent depth of A.T.B. may be substituted.
4. For transverse or diagonal trenches in existing roadway pavement, CDF will be used from the bottom of full pavement section to a maximum CDF section of 3 feet or to 6" above the top of the pipe, which ever is less. See note 13 of Std. Plan UGN of this Manual.

TRENCH ZONE:

1. Granular backfill as approved by local agency or W.S.D.O.T. specifications for granular backfill. Compacted to 95% of maximum density in the trench zone using Method C compaction as per Section 2-03.3(14)C.
2. Native material may be used if approved prior to construction by Clark County.
3. Trench zone width -- see below.

PIPE ZONE:

1. Pipe zone material as specified by utility owner, and shall conform to section 9-03.12(3) WSDOT Specs.
2. 1.0 ft. max. from top of the pipe. 6" from top of pipe when CDF backfill used.

CONDITIONS:

1. A copy of the permit and requirements shall be on the job site at all times.
2. The permit holder shall be responsible for all restoration and maintenance of ditches, shoulders, driveways, landscaping, etc.
3. Call Clark County at 397-2446 twenty-four hours prior to commencing work.

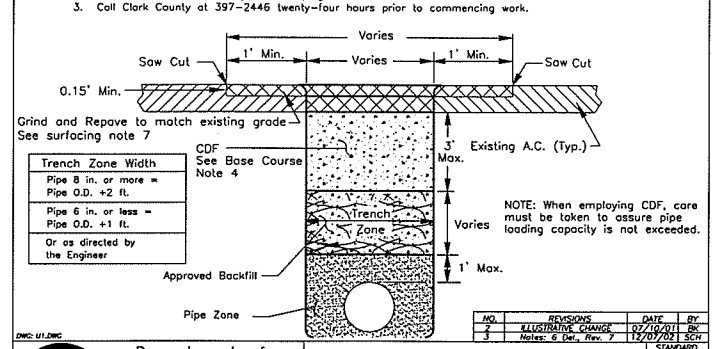

NO.	REVISIONS	DATE	BY
2	ILLUSTRATIVE CHANGE	07/10/011	BK
3	Notes: 6 Del., Rev. 7	12/07/02	SCH

DWG: U1.DWG

Department of Public Works
CLARK COUNTY
WASHINGTON
proud past, promising future

OPEN CUT UTILITY TRENCH BACKFILL DETAIL COLLECTOR OR ARTERIAL ROADWAY

APPROVED
Peter Capen
COUNTY ENGINEER
7/20/01
DATE

STANDARD
U1
PLAN No.
DESIGNED
DRAWN
DATE 04/29/03

DESIGNED JM
DRAWN BAK
CRP 310122
HOR. NA
VERT. NA
DATE 6/20/03
DWG: RD2
SHEET OF

CALL 48 HOURS BEFORE YOU DIG
1-800-553-4344
"It's the Law"
NORTHWEST UTILITIES NOTIFICATION CENTER

STATE OF WASHINGTON
PETER M. EABECK
REGISTERED PROFESSIONAL ENGINEER
EXPIRES: MAR. 26, 2005

DESIGN & ENGINEERING DIVISION
DESIGN SECTION

NE 72ND AVENUE
ROADWAY DETAILS II

proud past, promising future
CLARK COUNTY
WASHINGTON

N:\CIP\PROJECTS\310122-NE72Ave-H99toST Johns\DESIGN\DWGS\RD1-2.dwg, Layout1 (2), 10/20/2004 10:33:38 AM, beglerjk

STANDARD MANHOLE TYPE 2 — 72" & 96" (D1.2)

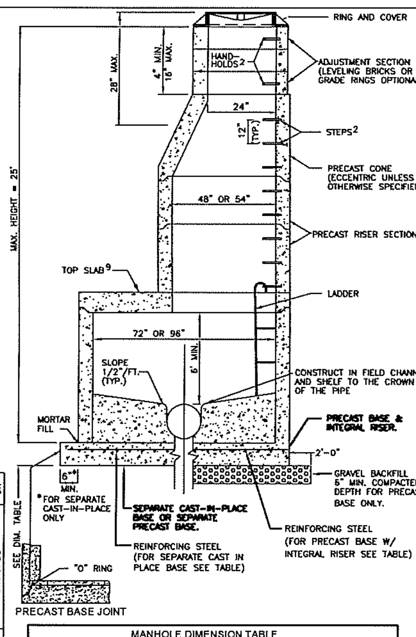

MANHOLE DIMENSION TABLE						
DIA.	THICKNESS		MAXIMUM KNOCKOUT SIZE	MINIMUM DISTANCE BETWEEN KNOCKOUTS	BASE REINFORCING STEEL SQ IN/FT EACH DIRECTION	
	WALL	BASE			INTEGRAL BASE	SEPARATE BASE
72"	6"	8"	60"	12"	0.24	0.35
96"	8"	12"	84"	12"	0.29	0.39

NOTES:

1. MANHOLES SHALL BE CONSTRUCTED IN ACCORDANCE WITH AASHTO M199 UNLESS OTHERWISE SHOWN ON PLANS OR NOTED IN THE WSDOT/APWA STANDARD SPECIFICATIONS.
2. HANDHOLDS IN ADJUSTMENT SECTION SHALL HAVE 3" MIN. CLEARANCE. STEPS IN MANHOLE SHALL HAVE 6" MIN. CLEARANCE. SEE PLAN NO. D1.5, "MANHOLE DETAILS." HANDHOLDS SHALL BE PLACED IN ALTERNATING GRADE RINGS OR LEVELING BRICK COURSE WITH A MIN. OF ONE HAND HOLD BETWEEN THE LAST STEP AND THE TOP OF THE MANHOLE.
3. ALL REINFORCED CAST-IN-PLACE CONCRETE SHALL BE CLASS 4000. ALL PRECAST CONCRETE SHALL BE CLASS 4000. NON-REINFORCED CONCRETE IN CHANNEL AND SHELF SHALL BE CLASS 3000.
4. PRECAST BASES SHALL BE FURNISHED WITH CUTOUTS OR KNOCKOUTS. KNOCKOUTS SHALL HAVE WALL THICKNESS OF 2" MIN. UNUSED KNOCKOUTS NEED NOT BE GROUTED IF WALL IS LEFT INTACT. PIPES SHALL BE INSTALLED ONLY IN FACTORY KNOCKOUTS UNLESS OTHERWISE APPROVED BY THE ENGINEER.
5. KNOCKOUT OR CUTOUT HOLE SIZE SHALL EQUAL PIPE OUTER DIAM. PLUS MANHOLE WALL THICKNESS. SEE MANHOLE DIMENSION TABLE BELOW.
6. MANHOLE RINGS AND COVERS SHALL BE IN ACCORDANCE WITH SEC. 7.05 AND MEET THE STRENGTH REQUIREMENTS OF FEDERAL SPECIFICATION RR-F-621D. MATING SURFACES SHALL BE FINISHED TO ASSURE NON-ROCKING FIT WITH ANY COVER POSITION.
7. ALL BASE REINFORCING STEEL SHALL HAVE A MIN. YIELD STRENGTH OF 60,000 PSI AND BE PLACED IN THE UPPER HALF OF THE BASE WITH 1" MIN. CLEARANCE.
8. FOR HEIGHTS OF 12' OR LESS, MIN. SOIL BEARING VALUE SHALL EQUAL 3,300 POUNDS PER SQUARE FOOT. FOR HEIGHTS OVER 12', MIN. SOIL BEARING VALUE SHALL EQUAL 3,800 POUNDS PER SQUARE FOOT.
9. FOR DETAILS SHOWING GRADE RING, LADDER, STEPS, HANDHOLDS, AND TOP SLABS, SEE PLAN NO. D1.5, "MANHOLE DETAILS."
10. INSIDE DROP MAXIMUM TO BE 4' VERTICAL DISTANCE I.E. TO I.E.
11. KNOCKOUTS TO BE USED WHEN STUB OUT PIPE IS 3' OR LESS.
12. MINIMUM 0.20' FALL BETWEEN INLET AND OUTLET, ANY REDUCTION IN THIS DESIGN REQUIREMENT MUST BE APPROVED BY REVIEWING AUTHORITY.
13. SEE THE WSDOT/APWA STANDARD SPECIFICATIONS SEC. 7-05.3 FOR JOINT REQUIREMENTS.

Department of Public Works — CLARK COUNTY WASHINGTON — proud past, promising future
MANHOLE TYPE 2 72" & 96" — APPROVED — COUNTY ENGINEER — 01/01/04 DATE — STANDARD D1.2 PLAN No. — DESIGNED SCH — DRAWN SCH — DATE 07/07/03 — DWG: D1-2.DWG

STANDARD MANHOLE TYPE 1 — 48", 54", & 60" (D1.1)

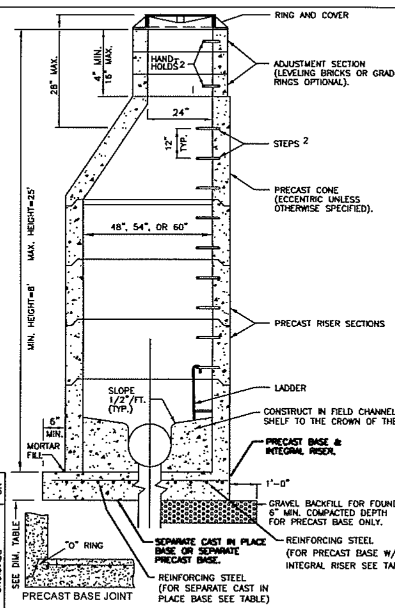

MANHOLE DIMENSION TABLE						
DIA.	THICKNESS		MAXIMUM KNOCKOUT SIZE	MINIMUM DISTANCE BETWEEN KNOCKOUTS	BASE REINFORCING STEEL SQ IN/FT EACH DIRECTION	
	WALL	BASE			INTEGRAL BASE	SEPARATE BASE
48"	4"	6"	36"	8"	0.15	0.23
54"	4.5"	8"	42"	8"	0.19	0.19
60"	5"	8"	48"	8"	0.25	0.25

NOTES:

1. MANHOLES SHALL BE CONSTRUCTED IN ACCORDANCE WITH AASHTO M199 UNLESS OTHERWISE SHOWN ON PLANS OR NOTED IN THE WSDOT/APWA STANDARD SPECIFICATIONS.
2. HANDHOLDS IN ADJUSTMENT SECTION SHALL HAVE 3" MIN. CLEARANCE. STEPS IN MANHOLE SHALL HAVE 6" MIN. CLEARANCE. SEE PLAN NO. D1.5, "MANHOLE DETAILS." HANDHOLDS SHALL BE PLACED IN ALTERNATING GRADE RINGS OR LEVELING BRICK COURSE WITH A MIN. OF ONE HAND HOLD BETWEEN THE LAST STEP AND THE TOP OF THE MANHOLE.
3. ALL REINFORCED CAST-IN-PLACE CONCRETE SHALL BE CLASS 4000. ALL PRECAST CONCRETE SHALL BE CLASS 4000. NON-REINFORCED CONCRETE IN CHANNEL AND SHELF SHALL BE CLASS 3000.
4. PRECAST BASES SHALL BE FURNISHED WITH CUTOUTS OR KNOCKOUTS. KNOCKOUTS SHALL HAVE WALL THICKNESS OF 2" MIN. UNUSED KNOCKOUTS NEED NOT BE GROUTED IF WALL IS LEFT INTACT. PIPES SHALL BE INSTALLED ONLY IN FACTORY KNOCKOUTS UNLESS OTHERWISE APPROVED BY THE ENGINEER.
5. KNOCKOUT OR CUTOUT HOLE SIZE SHALL EQUAL PIPE OUTER DIAM. PLUS MANHOLE WALL THICKNESS. SEE MANHOLE DIMENSION TABLE BELOW.
6. MANHOLE RINGS AND COVERS SHALL BE IN ACCORDANCE WITH SEC. 7.05 AND MEET THE STRENGTH REQUIREMENTS OF FEDERAL SPECIFICATION RR-F-621D. MATING SURFACES SHALL BE FINISHED TO ASSURE NON-ROCKING FIT WITH ANY COVER POSITION.
7. ALL BASE REINFORCING STEEL SHALL HAVE A MIN. YIELD STRENGTH OF 60,000 PSI AND BE PLACED IN THE UPPER HALF OF THE BASE WITH 1" MIN. CLEARANCE.
8. FOR HEIGHTS OF 12' OR LESS, MIN. SOIL BEARING VALUE SHALL EQUAL 3,300 POUNDS PER SQUARE FOOT. FOR HEIGHTS OVER 12', MIN. SOIL BEARING VALUE SHALL EQUAL 3,800 POUNDS PER SQUARE FOOT.
9. FOR DETAILS SHOWING GRADE RING, LADDER, STEPS, HANDHOLDS, AND TOP SLABS, SEE PLAN NO. D1.5, "MANHOLE DETAILS."
10. INSIDE DROP MAXIMUM TO BE 4' VERTICAL DISTANCE I.E. TO I.E.
11. KNOCKOUTS TO BE USED WHEN STUB OUT PIPE IS 3' OR LESS.
12. MINIMUM 0.20' FALL BETWEEN INLET AND OUTLET, ANY REDUCTION IN THIS DESIGN REQUIREMENT MUST BE APPROVED BY REVIEWING AUTHORITY.
13. SEE THE WSDOT/APWA STANDARD SPECIFICATIONS SEC. 7-05.3 FOR JOINT REQUIREMENTS.

Department of Public Works — CLARK COUNTY WASHINGTON — proud past, promising future
STANDARD MANHOLE TYPE 1 48", 54", & 60" — APPROVED — COUNTY ENGINEER — 01/01/04 DATE — STANDARD D1.1 PLAN No. — DESIGNED SCH — DRAWN SCH — DATE 07/07/03 — DWG: D1-1.DWG

MANHOLE DETAILS (D1.5)

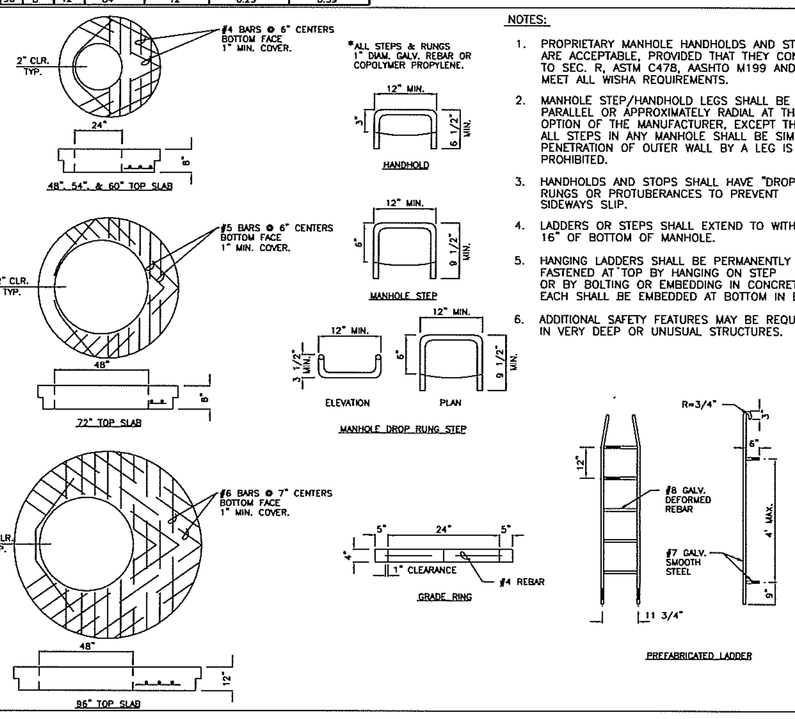

NOTES:

1. PROPRIETARY MANHOLE HANDHOLDS AND STEPS ARE ACCEPTABLE, PROVIDED THAT THEY CONFORM TO SEC. R, ASTM C478, AASHTO M199 AND MEET ALL WISHA REQUIREMENTS.
2. MANHOLE STEP/HANDHOLD LEGS SHALL BE PARALLEL OR APPROXIMATELY RADIAL AT THE OPTION OF THE MANUFACTURER, EXCEPT THAT ALL STEPS IN ANY MANHOLE SHALL BE SIMILAR. PENETRATION OF OUTER WALL BY A LEG IS PROHIBITED.
3. HANDHOLDS AND STOPS SHALL HAVE "DROP" RUNGS OR PROTUBERANCES TO PREVENT SIDEWAYS SLIP.
4. LADDERS OR STEPS SHALL EXTEND TO WITHIN 16" OF BOTTOM OF MANHOLE.
5. HANGING LADDERS SHALL BE PERMANENTLY FASTENED AT TOP BY HANGING ON STEP OR BY BOLTING OR EMBEDDING IN CONCRETE. EACH SHALL BE EMBEDDED AT BOTTOM IN BASE.
6. ADDITIONAL SAFETY FEATURES MAY BE REQUIRED IN VERY DEEP OR UNUSUAL STRUCTURES.

Department of Public Works — CLARK COUNTY WASHINGTON — proud past, promising future
MANHOLE DETAILS — APPROVED — COUNTY ENGINEER — 01/01/04 DATE — STANDARD D1.5 PLAN No. — DESIGNED SCH — DRAWN SCH — DWG: D1-5.DWG

MANHOLE TYPE 3 — 48", 54", 60", 72", & 96" (D1.3)

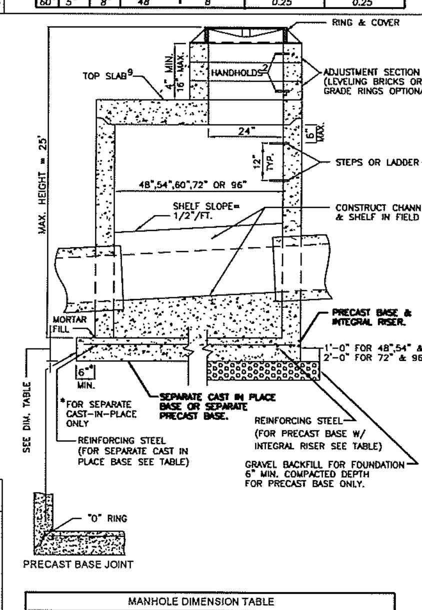

MANHOLE DIMENSION TABLE						
DIA.	THICKNESS		MAXIMUM KNOCKOUT SIZE	MINIMUM DISTANCE BETWEEN KNOCKOUTS	BASE REINFORCING STEEL SQ IN/FT EACH DIRECTION	
	WALL	BASE			INTEGRAL BASE	SEPARATE BASE
48"	4"	6"	36"	8"	0.15	0.23
54"	4.5"	8"	42"	8"	0.19	0.19
60"	5"	8"	48"	8"	0.25	0.25
72"	6"	8"	60"	12"	0.24	0.35
96"	8"	12"	84"	12"	0.29	0.39

NOTES:

1. MANHOLES SHALL BE CONSTRUCTED IN ACCORDANCE WITH AASHTO M199 UNLESS OTHERWISE SHOWN ON PLANS OR NOTED IN THE WSDOT/APWA STANDARD SPECIFICATIONS.
2. HANDHOLDS IN ADJUSTMENT SECTION SHALL HAVE 3" MIN. CLEARANCE. STEPS IN MANHOLE SHALL HAVE 6" MIN. CLEARANCE. SEE PLAN D1.5, "MANHOLE DETAILS." HANDHOLDS SHALL BE PLACED IN ALTERNATING GRADE RINGS OR LEVELING BRICK COURSE WITH A MIN. OF ONE HANDHOLD BETWEEN THE LAST STEP AND THE TOP OF THE MANHOLE.
3. ALL REINFORCED CAST-IN-PLACE CONCRETE SHALL BE CLASS4000. NON-REINFORCED CONCRETE IN CHANNEL AND SHELF SHALL BE CLASS 3000. ALL PRECAST CONCRETE SHALL BE CLASS 4000.
4. PRECAST BASES SHALL BE FURNISHED WITH CUTOUTS OR KNOCKOUTS. KNOCKOUTS SHALL HAVE WALL THICKNESS OF 2" MIN. UNUSED KNOCKOUTS NEED NOT BE GROUTED IF WALL IS LEFT INTACT. PIPES SHALL BE INSTALLED ONLY IN FACTORY KNOCKOUTS UNLESS OTHERWISE APPROVED BY THE ENGINEER.
5. KNOCKOUT OR CUTOUT HOLE SIZE SHALL EQUAL PIPE OUTER DIAM. PLUS MANHOLE WALL THICKNESS. SEE MANHOLE DIMENSION TABLE BELOW.
6. MANHOLE RINGS AND COVERS SHALL BE IN ACCORDANCE WITH SEC. 7.05 AND MEET THE STRENGTH REQUIREMENTS OF FEDERAL SPECIFICATION RR-F-621D. MATING SURFACES SHALL BE FINISHED TO ASSURE NON-ROCKING FIT WITH ANY COVER POSITION.
7. ALL BASE REINFORCING STEEL SHALL HAVE A MIN. YIELD STRENGTH OF 60,000 PSI AND BE PLACED IN THE UPPER HALF OF THE BASE WITH 1" MIN. CLEARANCE.
8. FOR HEIGHTS OF 12' OR LESS, MIN. SOIL BEARING VALUE SHALL EQUAL 3,300 POUNDS PER SQUARE FOOT. FOR HEIGHTS OVER 12', MIN. SOIL BEARING VALUE SHALL EQUAL 3,800 POUNDS PER SQUARE FOOT.
9. FOR DETAILS SHOWING GRADE RING, LADDER, STEPS, HANDHOLDS, AND TOP SLABS, SEE PLAN D1.5, "MANHOLE DETAILS."
10. INSIDE DROP MAXIMUM TO BE 4' VERTICAL DISTANCE I.E. TO I.E.
11. KNOCKOUTS TO BE USED WHEN STUB OUT PIPE IS 3' OR LESS.
12. MINIMUM 0.20' FALL BETWEEN INLET AND OUTLET, ANY REDUCTION IN THIS DESIGN REQUIREMENT MUST BE APPROVED BY REVIEWING AUTHORITY.
13. SEE THE WSDOT/APWA STANDARD SPECIFICATIONS SEC. 7-05.3 FOR JOINT REQUIREMENTS.

Department of Public Works — CLARK COUNTY WASHINGTON — proud past, promising future
MANHOLE TYPE 3 48", 54", 60", 72", & 96" — APPROVED — COUNTY ENGINEER — 01/01/04 DATE — STANDARD D1.3 PLAN No. — DESIGNED SCH — DRAWN SCH — DATE 07/07/03 — DWG: D1-3.DWG

STANDARD TYPE 1 COMBINATION CURB INLET (D3.0)

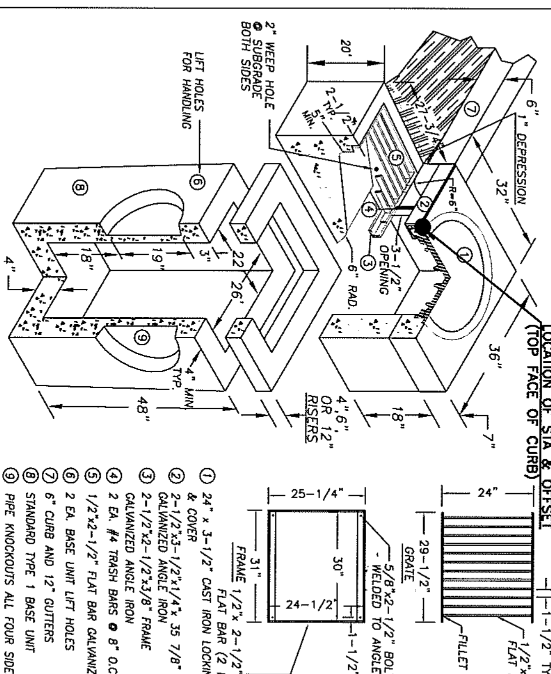

1. 24" x 3-1/2" CAST IRON LOCKING FRAME & COVER
2. 2-1/2"x3-1/2"x1/4"x 35 7/8" GALVANIZED ANGLE IRON
3. 2-1/2"x2-1/2"x3/8" FRAME GALVANIZED ANGLE IRON
4. 2 EA. #4 TRASH BARS @ 8" O.C.
5. 1/2"x2-1/2" FLAT BAR GALVANIZED GRATE
6. 2 EA. BASE UNIT LIFT HOLES
7. 6" CURB AND 12" GUTTERS
8. STANDARD TYPE 1 BASE UNIT
9. PIPE KNOCKOUTS ALL FOUR SIDES.

NOTES

1. COMBINATION CURB INLET TO BE CONSTRUCTED IN ACCORDANCE WITH ASTM C478 & C890 UNLESS SHOWN ON PLANS OR NOTED IN STANDARD SPECIFICATIONS.
2. REINFORCING FOR INLET UNIT, 3 EA. #4 HORZONTAL BARS; REINFORCING FOR TOP UNIT, 2 EA. #3 HORZONTAL BARS; REINFORCING FOR INLET SLOPED BASE, 4x4 MESH.
3. ALL REBAR TO MEET ASTM A615 GRADE 60.
4. AS AN ACCEPTABLE ALTERNATIVE TO REBAR, WELDED WIRE FABRIC HAVING A MIN. AREA OF 0.12 SQAURE INCHES PER FOOT MAY BE USED. WELDED WIRE FABRIC SHALL COMPLY TO ASTM A497. WIRE FABRIC SHALL NOT BE PLACED IN KNOCKOUTS.
5. ALL REINFORCED CAST-IN-PLACE CONCRETE SHALL BE CLASS 4,000.
6 PRECAST BASES SHALL BE FURNISHED WITH CUTOUTS OR KNOCKOUTS. KNOCKOUTS SHALL HAVE A WALL THICKNESS OF 2" MIN. ALL PIPE SHALL BE INSTALLED IN FACTORY PROVIDED KNOCKOUTS. UNUSED KNOCKOUTS NEED NOT BE GROUTED IF WALL IS LEFT INTACT.
7. KNOCKOUTS OR CUTOUT HOLE SIZE IS EQUAL TO PIPE OUTER DIAM. PLUS INLET WALL THICKNESS.
8. ROUND KNOCKOUTS MAY BE ON ALL 4 SIDES WITH MAX. DIAM. OF 17".
9. THE MAX. DEPTH FROM THE FINISHED GRADE TO THE PIPE INVERT IS 5'-0".
10. ANY PROTUDING ENDS OF PIPES SHALL BE TRIMMED FLUSH WITH THE INSIDE WALLS AND GROUTED TO THE SATISFACTION OF ENGINEER.
11. GRATE TO HAVE 1" DEPRESSION AT GUTTER INLET WITH GUTTER TO BE TAPERED DOWN TO INLET.
12. INSTALL REMOVABLE APWA TYPE 60A TRAP OR EQUAL, SEE STD. PLAN D2.1.
13. CONTRACTOR SHALL HAVE THE OPTION OF FURNISHING PRECAST OR CAST-IN-PLACE INLET STRUCTURES, UNLESS SPECIFIED.
14. SEE STD. PLAN 4.1 FOR BASIN GUTTER PAN DETAIL.

Department of Public Works — CLARK COUNTY WASHINGTON — proud past, promising future
STANDARD TYPE 1 COMBINATION CURB INLET — APPROVED — COUNTY ENGINEER — 01/01/04 DATE — STANDARD D3.0 PLAN No. — DESIGNED SCH — DRAWN SCH — DWG: D3-0.DWG

STANDARD MANHOLE FRAME AND COVER (D1.6)

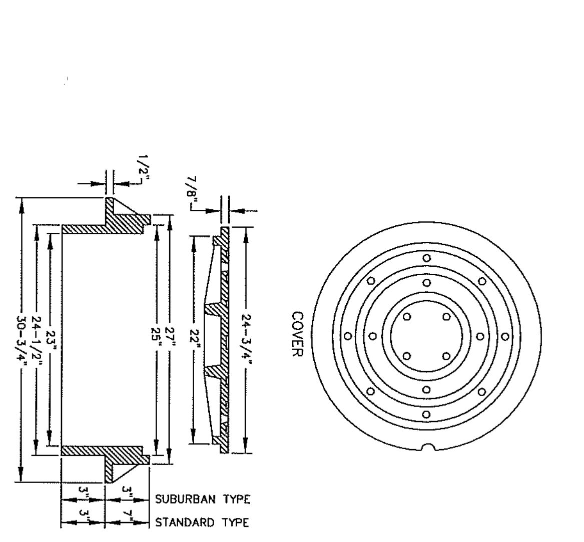

NOTES:

1. USE SUBURBAN TYPE ONLY IN NON-TRAFFIC AREAS, AND ONLY WITH APPROVAL BY COUNTY.
2. COVER MATERIAL TO BE DUCTILE IRON ASTM A536 GRADE 80-55-06
3. FRAME MATERIAL TO BE GRAY CAST IRON ASTM A-48 CLASS 30.
4. SEE WSDOT STANDARD SPECIFICATIONS SEC. 7.05
5. COVER AND FRAME TO BE MACHINED TO A TRUE BEARING ALL AROUND.
6. NOTCH LID FOR LIFTING HOOK.

Department of Public Works — CLARK COUNTY WASHINGTON — proud past, promising future
STANDARD MANHOLE FRAME AND COVER — APPROVED — COUNTY ENGINEER — 01/01/04 DATE — STANDARD D1.6 PLAN No. — DESIGNED SCH — DRAWN SCH — DWG: D1-6.DWG

HERRINGBONE GRATE FOR CATCH BASIN (D4.3)

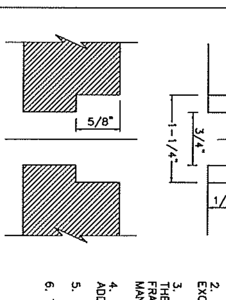

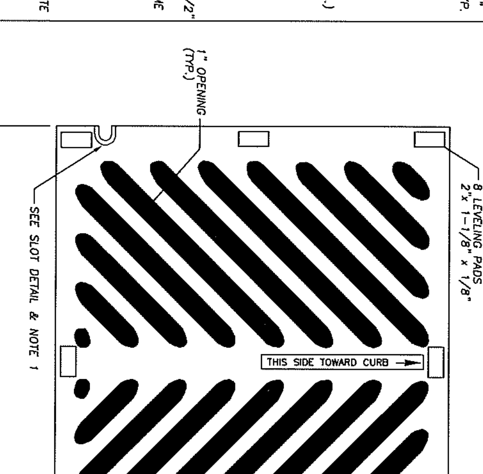

NOTES

1. WELDING NOT PERMITTED
2. USE VANED GRATE PER STD. PLAN D4.4 WHERE LONGITUDINAL SLOPE EXCEEDS 4%.
3. WHEN BOLT DOWN GRATES ARE SPECIFIED, PROVIDE TWO SLOTS IN THE GRATE THAT ARE VERTICALLY ALIGNED WITH THE HOLES IN THE FRAME. LOCATION OF BOLT DOWN SLOTS VARIES AMONG DIFFERENT MANUFACTURERS.
4. REFER TO WSDOT STANDARD SPECIFICATION 9-05.15(2) FOR ADDITIONAL REQUIREMENTS.
5. FOR FRAME DETAIL, SEE STD. PLAN D4.2
6. THE THICKNESS OF THE GRATE SHALL NOT EXCEED 1-5/8".

Department of Public Works — CLARK COUNTY WASHINGTON — proud past, promising future
HERRINGBONE GRATE FOR CATCH BASIN — APPROVED — COUNTY ENGINEER — 01/01/04 DATE — STANDARD D4.3 PLAN No. — DESIGNED SCH — DRAWN SCH — DWG: D4-3.dwg

CATCH BASIN OUTLET PIPE TRAP (D2.1)

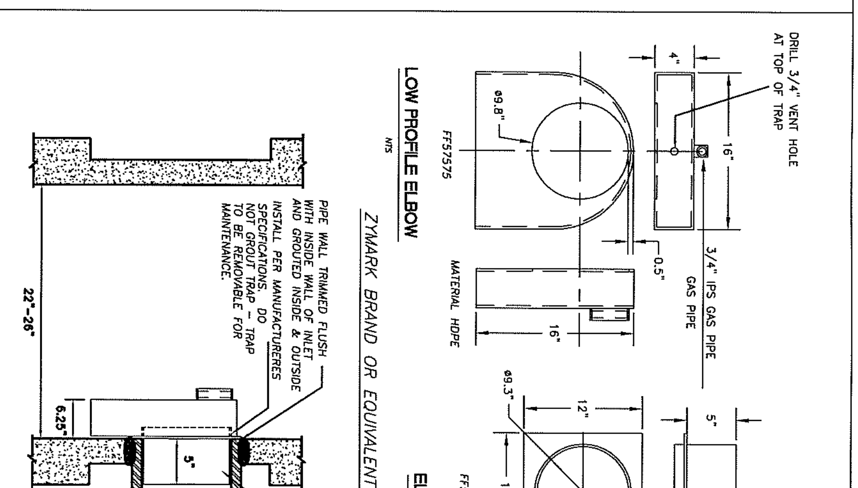

Department of Public Works — CLARK COUNTY WASHINGTON — proud past, promising future
CATCH BASIN OUTLET PIPE TRAP — APPROVED — COUNTY ENGINEER — 01/01/04 DATE — STANDARD D2.1 PLAN No. — DESIGNED SCH — DRAWN SCH — DWG: D2-1.DWG

CLARK COUNTY WASHINGTON — proud past, promising future

DESIGN & ENGINEERING DIVISION
DESIGN SECTION

NE 72ND AVENUE
DRAINAGE DETAILS I

JOHN MILNE — STATE OF WASHINGTON — 31148 — REGISTERED PROFESSIONAL ENGINEER — EXPIRES: JULY 7, 2003

CALL 48 HOURS BEFORE YOU DIG 1-800-553-4344 "It's the Law" — NORTHWEST UTILITIES NOTIFICATION CENTER

DESIGNED	JM
DRAWN	BAK
CRP	310122
HOR.	NA
VERT.	NA
DATE	10/29/04
DWG:	DD1
SHEET	OF

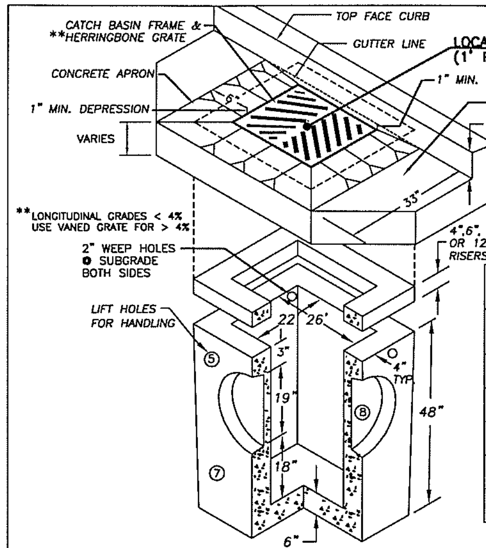

PIPE ALLOWANCES	
PIPE MATERIAL	MAXIMUM INSIDE DIAMETER
REINFORCED OR PLAIN CONCRETE	18"
ALL METAL PIPE	21"
CPSSP * (Std. Spec. 9-05.20	18"
SOLID WALL PVC (Std. Spec. 9-05.12(1)	21"
PROFILE WALL PVC (Std. Spec. 9-05.12(2)	21"

*CORRUGATED POLYETHYLENE STORM SEWER PIPE

NOTES:

1. CURB INLET TO BE CONSTRUCTED IN ACCORDANCE WITH ASTM C478 (AASHTO) M 199) & C890 UNLESS SHOWN ON PLANS OR NOTED IN STANDARD SPECIFICATIONS.
2. REINFORCING FOR INLET UNIT, 3 EA. #4 HORIZONTAL BARS.
3. REINFORCING FOR TOP UNIT, 2 EA. #3 HORIZONTAL BARS.
4. ALL REBAR TO MEET ASTM A615 GRADE 60.
5. AS AN ACCEPTABLE ALTERNATIVE TO REBAR, WELDED WIRE FABRIC HAVING A MIN. AREA OF 0.12 SQUARE INCHES PER FOOT MAY BE USED. WELDED WIRE FABRIC SHALL COMPLY TO ASTM A497. WIRE FABRIC SHALL NOT BE PLACED IN KNOCKOUTS.
6. ALL REINFORCED CAST-IN-PLACE CONCRETE SHALL BE CLASS 4,000.
7. PRECAST BASES SHALL BE FURNISHED WITH CUTOUTS OR KNOCKOUTS. KNOCKOUTS SHALL HAVE A WALL THICKNESS OF 2" MIN. ALL PIPE SHALL BE INSTALLED IN FACTORY PROVIDED KNOCKOUTS. UNUSED KNOCKOUTS NEED NOT BE GROUTED IF WALL IS LEFT INTACT.
8. KNOCKOUTS OR CUTOUT HOLE SIZE IS EQUAL TO PIPE OUTER DIAM. PLUS INLET WALL THICKNESS.
9. ROUND KNOCKOUTS MAY BE ON ALL 4 SIDES WITH MAX. DIAM. OF 20".
10. THE MAX. DEPTH FROM THE FINISHED GRADE TO THE PIPE INVERT IS 5'-0".
11. ANY PROTRUDING ENDS OF PIPES SHALL BE TRIMMED FLUSH WITH THE INSIDE WALLS AND GROUTED TO THE SATISFACTION OF ENGINEER.
12. CATCH BASIN FRAME AND GRATE SHALL BE IN ACCORDANCE WITH WDOT STANDARD SPECIFICATIONS AND MEET THE STRENGTH REQUIREMENTS OF FEDERAL SPECIFICATION RR-F-621D. MATING SURFACES SHALL BE FINISHED TO ASSURE NON-ROCKING FIT WITH ANY COVER POSITION.
13. FRAME MAY BE INSTALLED WITH FLANGE DOWN OR CAST INTO RISER.
14 INSTALL REMOVABLE APWA TYPE 60A TRAP OR EQUAL, SEE STD. PLAN D2.1.
15. CONTRACTOR SHALL HAVE THE OPTION OF FURNISHING PRECAST OR CAST-IN-PLACE INLET STRUCTURES, UNLESS SPECIFIED.

DWG: D4-0.DWG — Department of Public Works, CLARK COUNTY WASHINGTON, proud past, promising future — STANDARD CATCH BASIN TYPE 1 — APPROVED, COUNTY ENGINEER, 01/01/04 — STANDARD PLAN No. D4.0

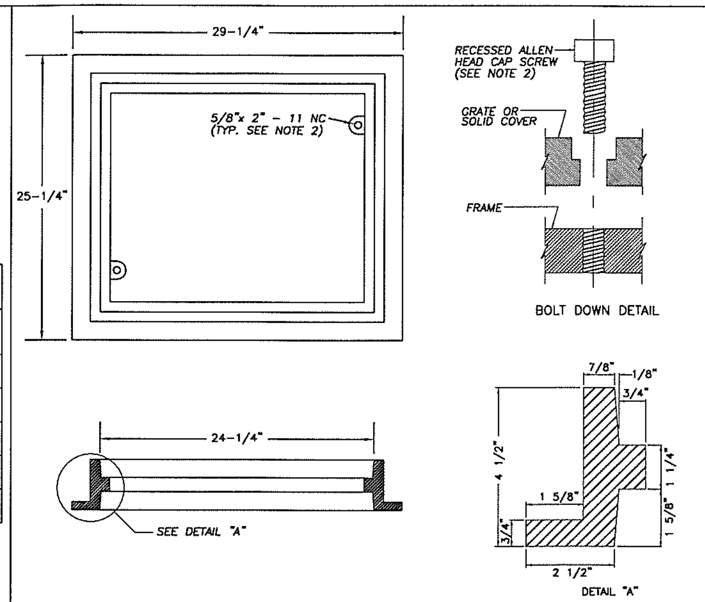

NOTES

1. THIS FRAME IS DESIGNED TO ACCOMODATE 20"x 24" GRATES OR COVERS AS SHOWN ON STD. PLANS D4.3 AND D4.4.

2. WHEN BOLT DOWN GRATES OR COVERS ARE SPECIFIED, PROVIDE TWO HOLES IN THE FRAME THAT ARE VERTICALLY ALIGNED WITH THE GRATE OR COVER SLOTS. TAP EACH HOLE TO ACCEPT A 5/8"x 2" - 11 NC ALLEN HEAD CAP SCREW. LOCATION OF BOLT DOWN HOLES VARIES AMONG DIFFERENT MANUFACTURERS.

3. REFER TO WSDOT STANDARD SPECIFICATION 9-05.15(2) FOR ADDITIONAL REQUIREMENTS.

4. SEE WSDOT STD. SPEC. SECTION 7.05.

DWG: D4-2.dwg — Department of Public Works, CLARK COUNTY WASHINGTON — REVERSIBLE FRAME FOR CATCH BASIN — APPROVED, COUNTY ENGINEER, 01/01/04 — STANDARD PLAN No. D4.2

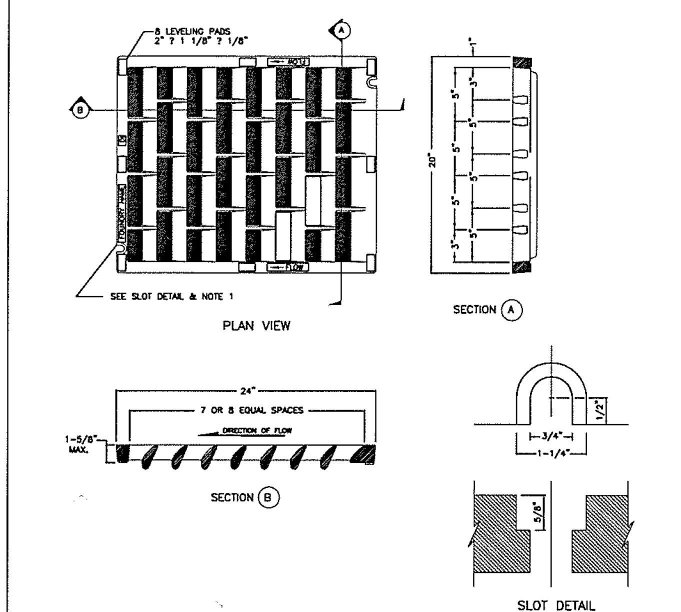

NOTES

1. WELDING NOT PERMITTED

2. USE HERRINGBONE GRATE PER STD. PLAN D4.3 WHERE LONGITUDINAL SLOPE IS LESS THAN 4%.

3. WHEN BOLT DOWN GRATES ARE SPECIFIED, PROVIDE TWO SLOTS IN THE GRATE THAT ARE VERTICALLY ALIGNED WITH THE HOLES IN THE FRAME. LOCATION OF BOLT DOWN SLOTS VARIES AMONG DIFFERENT MANUFACTURERS.

4. REFER TO WSDOT STANDARD SPECIFICATION 9-05.15(2) FOR ADDITIONAL REQUIREMENTS.

5. FOR FRAME DETAIL, SEE STD. PLAN D4.2

DWG: D4-4.dwg — Department of Public Works, CLARK COUNTY WASHINGTON — VANE GRATE FOR CATCH BASIN — APPROVED, COUNTY ENGINEER, 01/01/04 — STANDARD PLAN No. D4.4

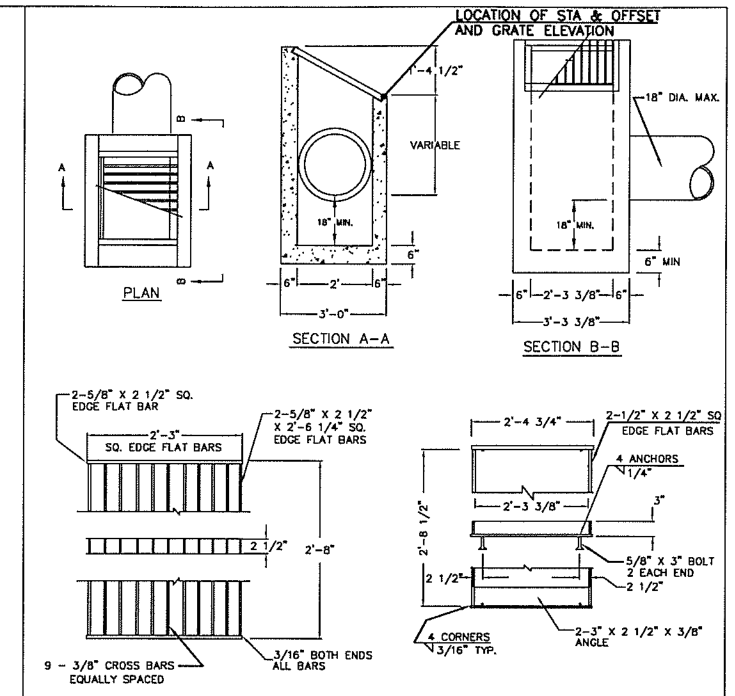

NOTES:

1. DITCH INLET CONSTRUCTION IN ACCORDANCE WITH ASTM C-478
2. CATCH BASIN, FRAME, AND GRATES SHALL BE FLAT BAR STEEL OR APPROVED EQUAL.
3. INSIDE FRAME DIMENSIONS: 2'-3 3/8"x 2'-8 1/2"".
4. 3/8" CROSS BARS SHALL BE FLUSH WITH THE GRATE SURFACE AND MAY BE FILLET WELDED, RESISTANCE WELDED OR ELECTROFORGED TO BEARING BARS.

DWG: D6.DWG — Department of Public Works, CLARK COUNTY WASHINGTON — DITCH INLET — APPROVED, COUNTY ENGINEER, 01/01/04 — STANDARD PLAN No. D6

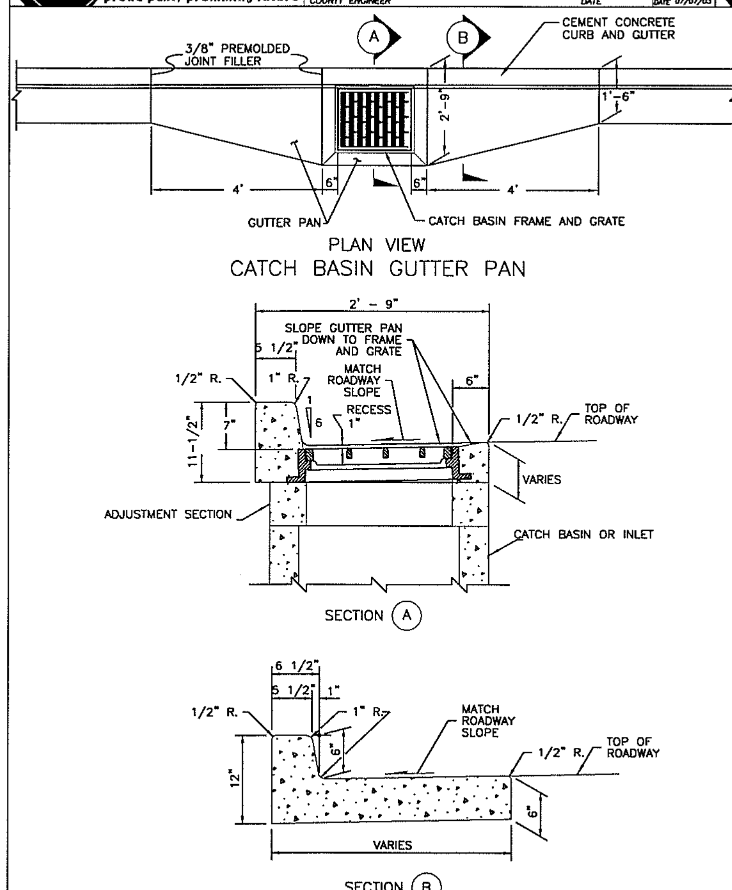

DWG: D4-1.DWG — Department of Public Works, CLARK COUNTY WASHINGTON — CATCH BASIN GUTTER PAN — APPROVED, COUNTY ENGINEER, 01/01/04 — STANDARD PLAN No. D4.1

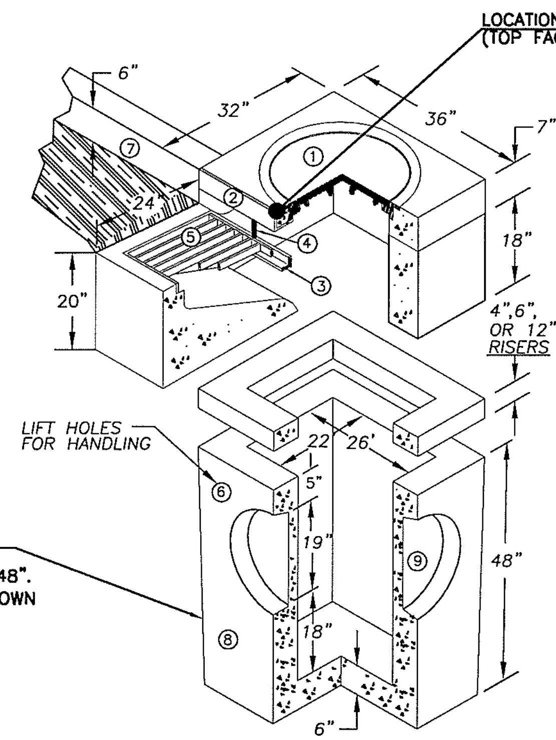

TYPE 1 BASE SHOWN (FOR TYPE 2 BASE, SEE STD. PLAN B-1e; DIA. = 48". ALIGN INLET FRAME AS SHOWN ON PLAN VIEW, THIS SHT.)

#	
1	24"ALUMINUM LOCKING FRAME & COVER
2	2 1/2"x3 1/2"x1/4"x 35 7/8" GALVANIZED ANGLE IRON
3	2"x2 1/2"x1/4"x33" GALVANIZED ANGLE IRON
4	2 EA. #4 TRASH BARS @12" O.C.
5	24 3/4"x 28 1/2" GALVANIZED GRATE
6	2 EA. BASE UNIT LIFT HOLES
7	6" CURB AND 18" GUTTERS
8	STANDARD TYPE 1 BASE UNIT
9	PIPE KNOCKOUTS ALL FOUR SIDES.

WEIGHT:

TOP WEIGHT 420 LB.
RISER WITH GRATE WEIGHT 1920 LB.
BASE WEIGHT 2200 LB.

NOTES:

1 REINFORCING FOR INLET UNIT 3 EA. #4 HORIZONTAL BARS.
2 REINFORCING FOR TOP UNIT 2 EA. #3 HORIZONTAL BARS
3 REINFORCING FOR INLET SLOPED BASE, 4x4 MESH
4 GUTTER IS TAPERED DOWN TO GRATE INLET
5 ALL CONCRETE IS 4,000 PSI MIN.
6 ALL REBAR MEETS ASTM A615 GRADE 60.

ISOMETRIC VIEW

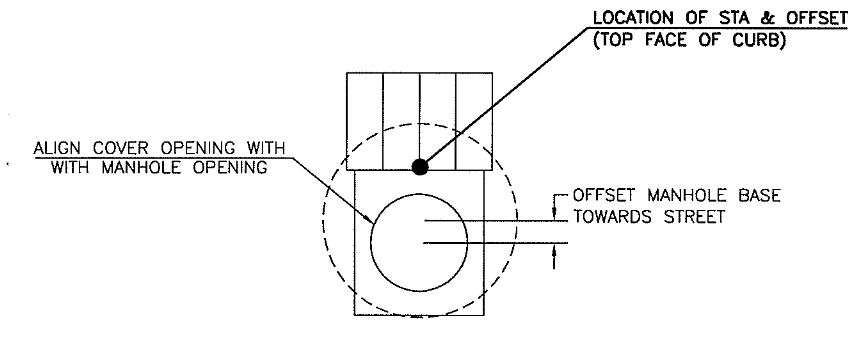

PLAN VIEW AND PLACEMENT DETAIL

TYPE 2 COMBINATION CURB INLET

NTS

DESIGN & ENGINEERING DIVISION
DESIGN SECTION

NE 72ND AVENUE
DRAINAGE DETAILS II

CLARK COUNTY WASHINGTON — proud past, promising future

CALL 48 HOURS BEFORE YOU DIG 1-800-553-4344 "It's the Law" NORTHWEST UTILITIES NOTIFICATION CENTER

JOHN MILNE — STATE OF WASHINGTON — 31148 — REGISTERED PROFESSIONAL ENGINEER — EXPIRES: JULY 7, 2003

DESIGNED	JM
DRAWN	BAK
CRP	310122
HOR.	NA
VERT.	NA
DATE	10/29/04
DWG:	DD2
SHEET	OF

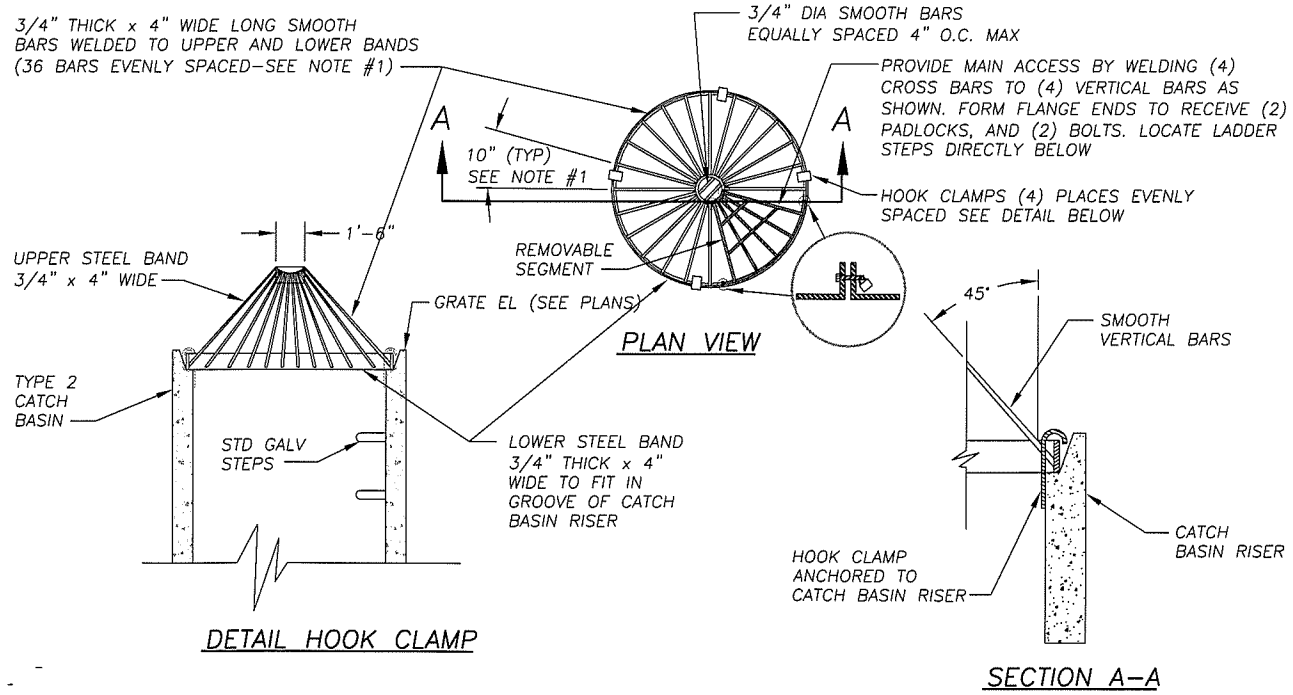

DROP INLET TRASH RACK

NTS

PRELIMINARY

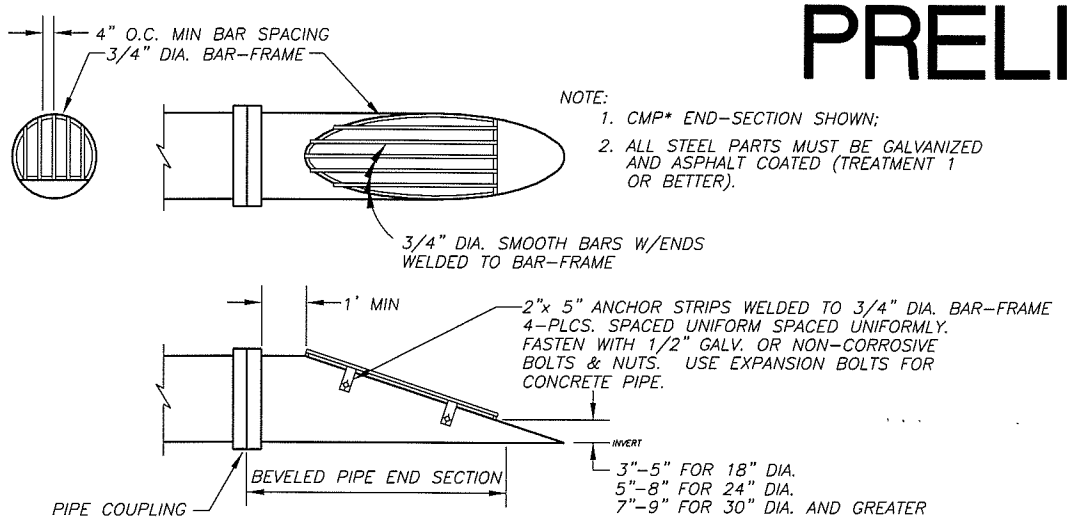

NOTE:
1. CMP* END-SECTION SHOWN;
2. ALL STEEL PARTS MUST BE GALVANIZED AND ASPHALT COATED (TREATMENT 1 OR BETTER).

DEBRIS RACK

NTS

NOTE: FOR 12" DIP TRAP USE 12" * 90 DEG. DIP ELBOW

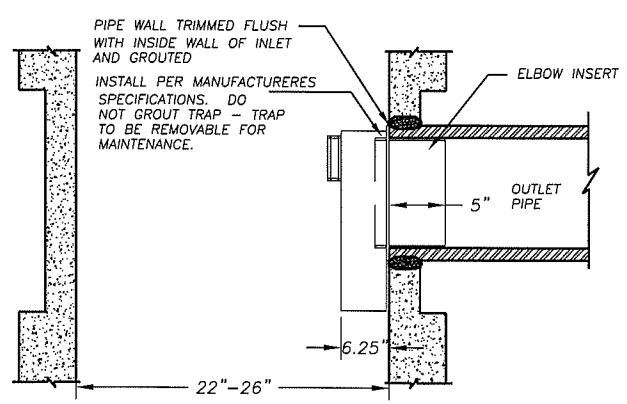

CATCH BASIN OUTLET PIPE TRAP

NTS

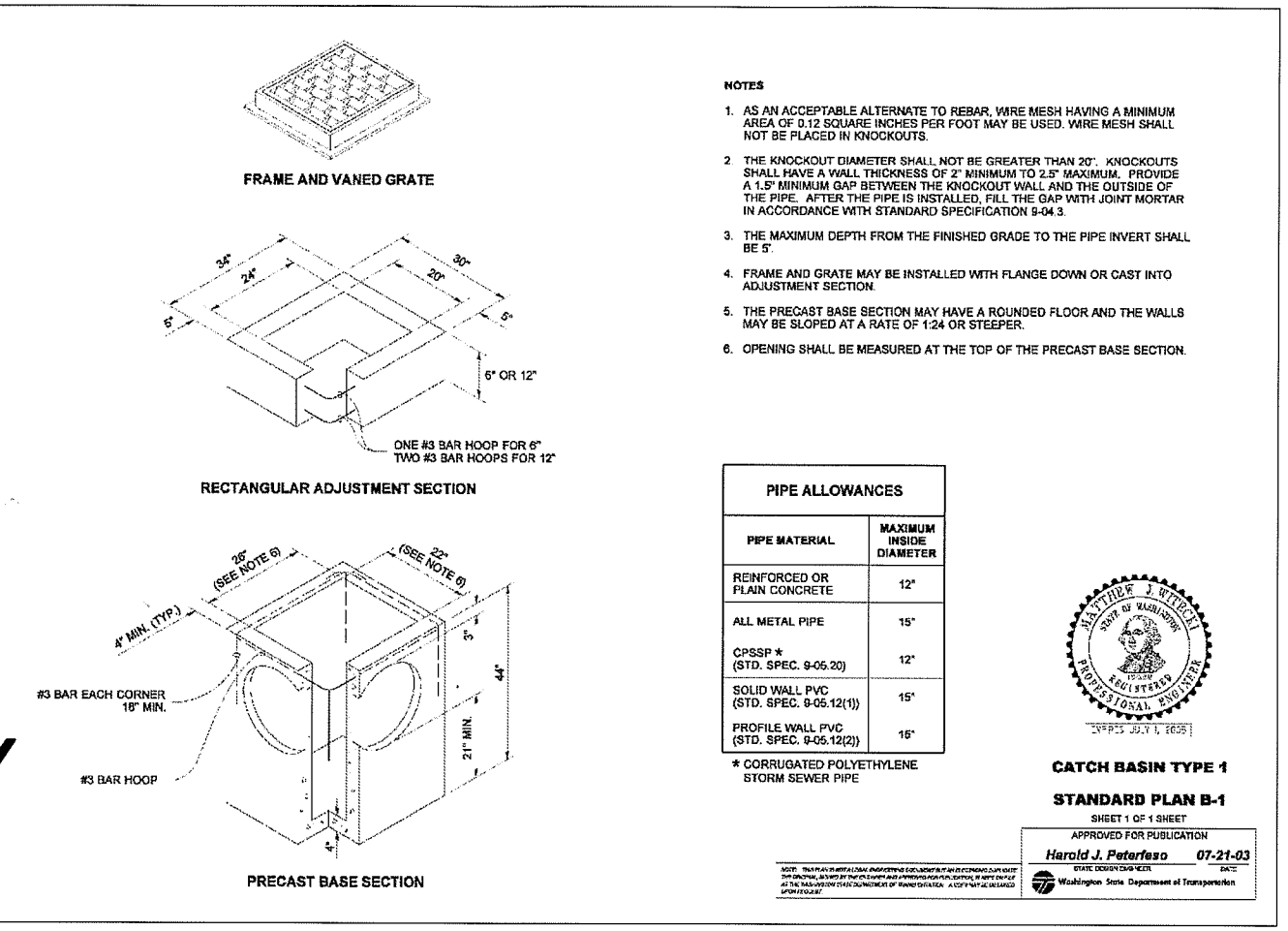

NOTES

1. AS AN ACCEPTABLE ALTERNATE TO REBAR, WIRE MESH HAVING A MINIMUM AREA OF 0.12 SQUARE INCHES PER FOOT MAY BE USED. WIRE MESH SHALL NOT BE PLACED IN KNOCKOUTS.
2. THE KNOCKOUT DIAMETER SHALL NOT BE GREATER THAN 20". KNOCKOUTS SHALL HAVE A WALL THICKNESS OF 2" MINIMUM TO 2.5" MAXIMUM. PROVIDE A 1.5" MINIMUM GAP BETWEEN THE KNOCKOUT WALL AND THE OUTSIDE OF THE PIPE. AFTER THE PIPE IS INSTALLED, FILL THE GAP WITH JOINT MORTAR IN ACCORDANCE WITH STANDARD SPECIFICATION 9-04.3.
3. THE MAXIMUM DEPTH FROM THE FINISHED GRADE TO THE PIPE INVERT SHALL BE 5'.
4. FRAME AND GRATE MAY BE INSTALLED WITH FLANGE DOWN OR CAST INTO ADJUSTMENT SECTION.
5. THE PRECAST BASE SECTION MAY HAVE A ROUNDED FLOOR AND THE WALLS MAY BE SLOPED AT A RATE OF 1:24 OR STEEPER.
6. OPENING SHALL BE MEASURED AT THE TOP OF THE PRECAST BASE SECTION.

PIPE ALLOWANCES

PIPE MATERIAL	MAXIMUM INSIDE DIAMETER
REINFORCED OR PLAIN CONCRETE	12"
ALL METAL PIPE	15"
CPSSP * (STD. SPEC. 9-05.20)	12"
SOLID WALL PVC (STD. SPEC. 9-05.12(1))	15"
PROFILE WALL PVC (STD. SPEC. 9-05.12(2))	15"

* CORRUGATED POLYETHYLENE STORM SEWER PIPE

MATTHEW J. WITHEAR — STATE OF WASHINGTON — 31146 — REGISTERED PROFESSIONAL ENGINEER — EXPIRES JULY 1, 2005

CATCH BASIN TYPE 1

STANDARD PLAN B-1

SHEET 1 OF 1 SHEET

APPROVED FOR PUBLICATION

Harold J. Peterfeso 07-21-03

STATE DESIGN ENGINEER DATE

Washington State Department of Transportation

NOTE: THIS PLAN IS INTENDED FOR INFORMATION PURPOSES ONLY. IT IS NOT A CONTRACT DOCUMENT. THE ORIGINAL SEALED PLAN IS ON FILE AT THE WASHINGTON STATE DEPARTMENT OF TRANSPORTATION. A COPY MAY BE OBTAINED UPON REQUEST.

DRAWN BY: MARK SUJKA

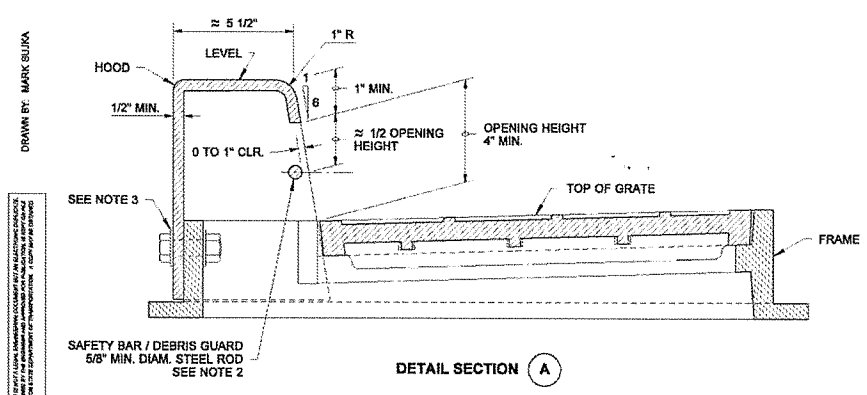

NOTES

1. THE ASYMMETRY OF THE COMBINATION INLET SHALL BE CONSIDERED WHEN CALCULATING THE OFFSET DISTANCE FOR THE CATCH BASIN. SEE SECTION "A".
2. THE DIMENSIONS OF THE FRAME AND HOOD MAY VARY SLIGHTLY AMONG DIFFERENT MANUFACTURERS. THE FRAME MAY HAVE CAST FEATURES INTENDED TO SUPPORT A GRATE GUARD. HOOD UNITS SHALL MOUNT OUTSIDE OF THE FRAME. THE METHODS FOR FASTENING THE SAFETY BAR / DEBRIS GUARD ROD TO THE HOOD MAY VARY. THE HOOD MAY INCLUDE CASTING LUGS. THE TOP OF THE HOOD MAY BE CAST WITH A PATTERN.
3. ATTACH THE HOOD TO THE FRAME WITH TWO 3/4" × 2" HEX HEAD BOLTS, NUTS, AND OVERSIZE WASHERS. THE WASHERS SHALL BE USED ON THE SLOTTED SIDE, AND SHALL HAVE DIAMETERS ADEQUATE TO ASSURE FULL BEARING ACROSS THE SLOTS.
4. WHEN BOLT DOWN GRATES ARE SPECIFIED IN THE CONTRACT, PROVIDE TWO HOLES IN THE FRAME THAT ARE VERTICALLY ALIGNED WITH THE GRATE SLOTS. TAP EACH HOLE TO ACCEPT A 5/8" × - 11 NC × 2" ALLEN HEAD CAP SCREW. LOCATION OF BOLT DOWN HOLES VARIES AMONG DIFFERENT MANUFACTURERS. SEE "BOLT DOWN DETAIL", STANDARD PLAN B-2a.
5. ONLY DUCTILE IRON VANED GRATES SHALL BE USED. SEE STANDARD PLANS B-2b AND B-2c FOR GRATE DETAILS. REFER TO STANDARD SPECIFICATION 9-05.15(2) FOR ADDITIONAL REQUIREMENTS.
6. THIS PLAN IS INTENDED TO SHOW THE INSTALLATION DETAILS OF A MANUFACTURED PRODUCT. IT IS NOT THE INTENT OF THIS PLAN TO SHOW THE SPECIFIC DETAILS NECESSARY TO FABRICATE THE CASTINGS SHOWN ON THIS DRAWING.

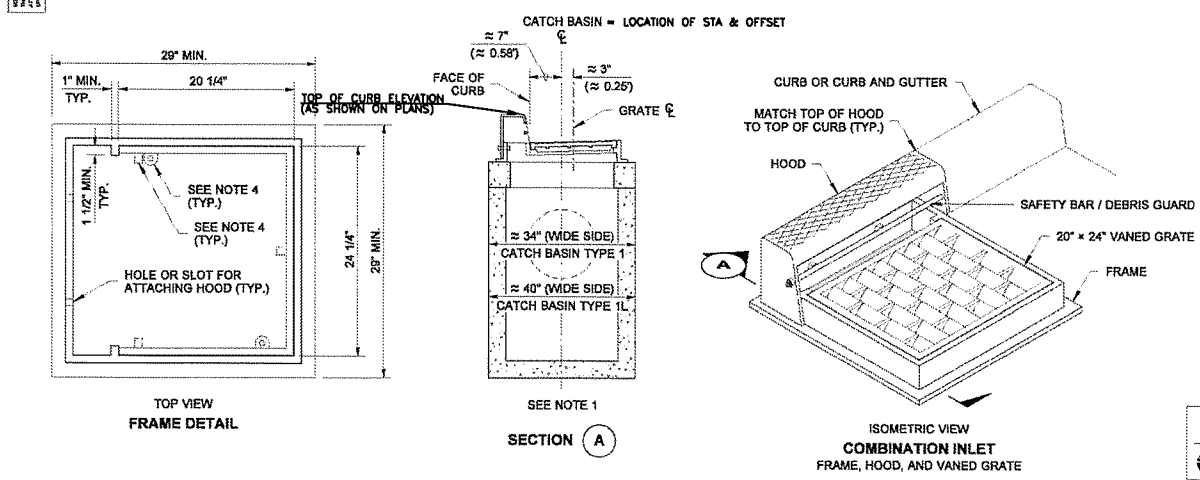

MATTHEW J. WITHEAR — STATE OF WASHINGTON — 31146 — REGISTERED PROFESSIONAL ENGINEER — EXPIRES JULY 1, 2005

COMBINATION INLET

STANDARD PLAN B-2e

SHEET 1 OF 1 SHEET

APPROVED FOR PUBLICATION

Harold J. Peterfeso 02-25-04

STATE DESIGN ENGINEER DATE

Washington State Department of Transportation

DESIGNED	JM
DRAWN	KB
CRP	310122
HOR.	NA
VERT.	NA
DATE	10/29/04
DWG:	DD3
SHEET	OF

CALL 48 HOURS BEFORE YOU DIG 1-800-553-4344 "It's the Law" NORTHWEST UTILITIES NOTIFICATION CENTER

STATE OF WASHINGTON — 31146 — REGISTERED PROFESSIONAL ENGINEER — EXPIRES JULY 1, 2005

DESIGN & ENGINEERING DIVISION
DESIGN SECTION

NE 72ND AVENUE
DRAINAGE DETAILS III

proud past, promising future

CLARK COUNTY WASHINGTON

SPECIFICATIONS

UNIT SIZE – 50 CM X 50 CM X 2.5 CM (20" X 20" X 1")

UNIT WEIGHT – 510 GRAMS (18 OZ.) OR 2.0 KG (4.5 POUNDS)

STRENGTH – 402 KG/CM (5720 PSI)

COLOR – BLACK (STANDARD)

RESIN – HDPE (WITH SOME POST-CONSUMER RECYCLED CONTENT)

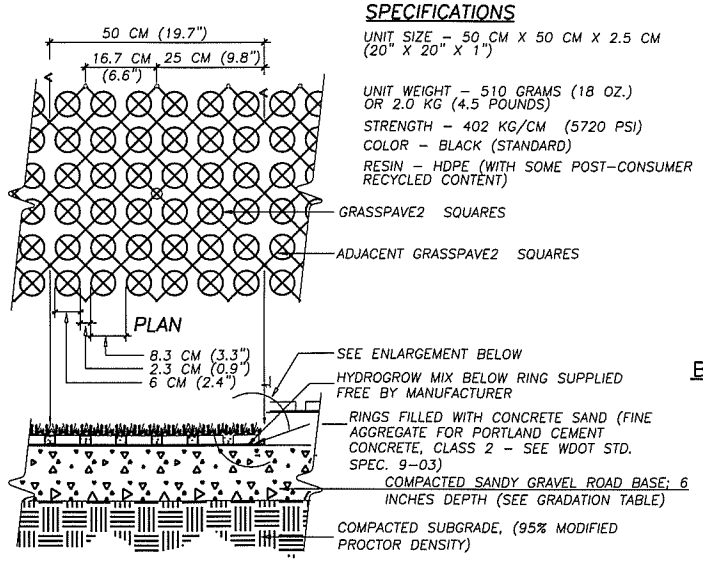

SECTION

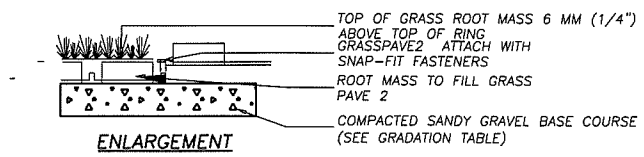

ENLARGEMENT

BASE COURSE GRADATION

SEIVE SIZE	% PASSING
3/4"	72"
3/8"	24"
#4 SCREEN	24"
#40 SCREEN	256.07
#200 SCREEN	258.07

NOTES

1. POROUS PAVERS SHALL BE "GRASSPAVE 2" OR APPROVED EQUAL ("GRASSPAVE" SHOWN)
2. INSTALL PER MANUFACTURERS INSTRUCTIONS AND AS DIRECTED BY ENGINEER.
3. GRASS MIX AS FOR STORMWATER FACILITY
4. PROVISION & INSTALLATION OF ALL MATERIALS INCLUDING BASE COURSE INCLUDED IN COST FOR POROUS PAVER BID ITMES.

POROUS PAVER DETAIL

NOT TO SCALE

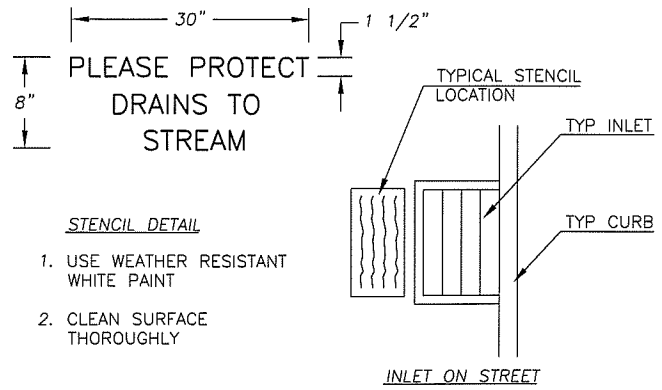

STENCIL DETAIL

1. USE WEATHER RESISTANT WHITE PAINT
2. CLEAN SURFACE THOROUGHLY

INLET STENCIL DETAIL

NTS

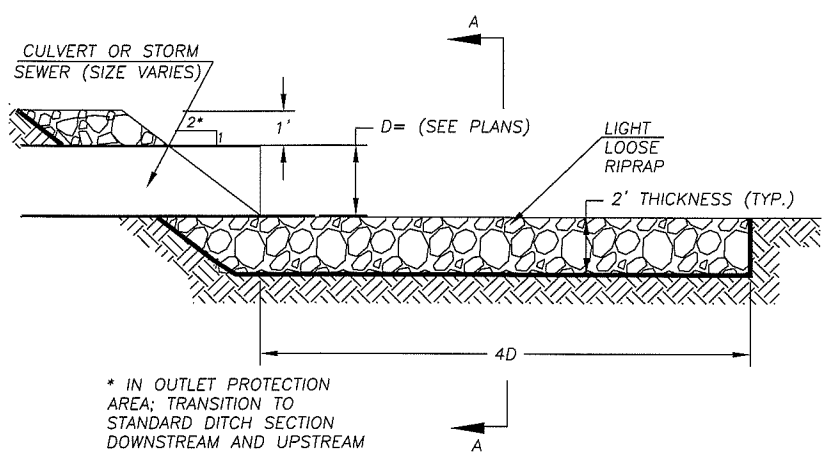

* IN OUTLET PROTECTION AREA; TRANSITION TO STANDARD DITCH SECTION DOWNSTREAM AND UPSTREAM

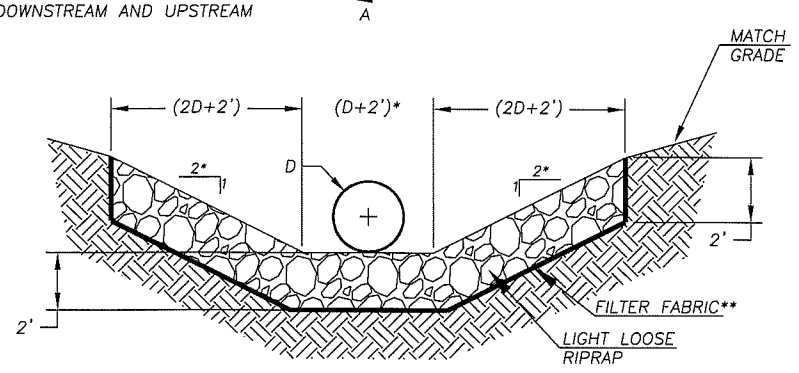

SECTION A-A

** CONSTRUCTION GEOTEXTILE FOR SEPARATION OR SOIL STABILIZATION (WSDOT 9-33, TABLE 3)

OUTFALL DISCHARGE PROTECTION

N.T.S.

PRELIMINARY

DESIGNED	JM
DRAWN	KB
CRP	310122
HOR.	NA
VERT.	NA
DATE	10/29/04
DWG:	DD4
SHEET	OF

CALL 48 HOURS BEFORE YOU DIG 1-800-553-4344 "It's the Law" NORTHWEST UTILITIES NOTIFICATION CENTER

STATE OF WASHINGTON KEVIN W. MILLER 31148 REGISTERED PROFESSIONAL ENGINEER

EXPIRES JULY 7, 2003

DESIGN & ENGINEERING DIVISION
DESIGN SECTION

NE 72ND AVENUE
DRAINAGE DETAILS IV

proud past, promising future

CLARK COUNTY WASHINGTON

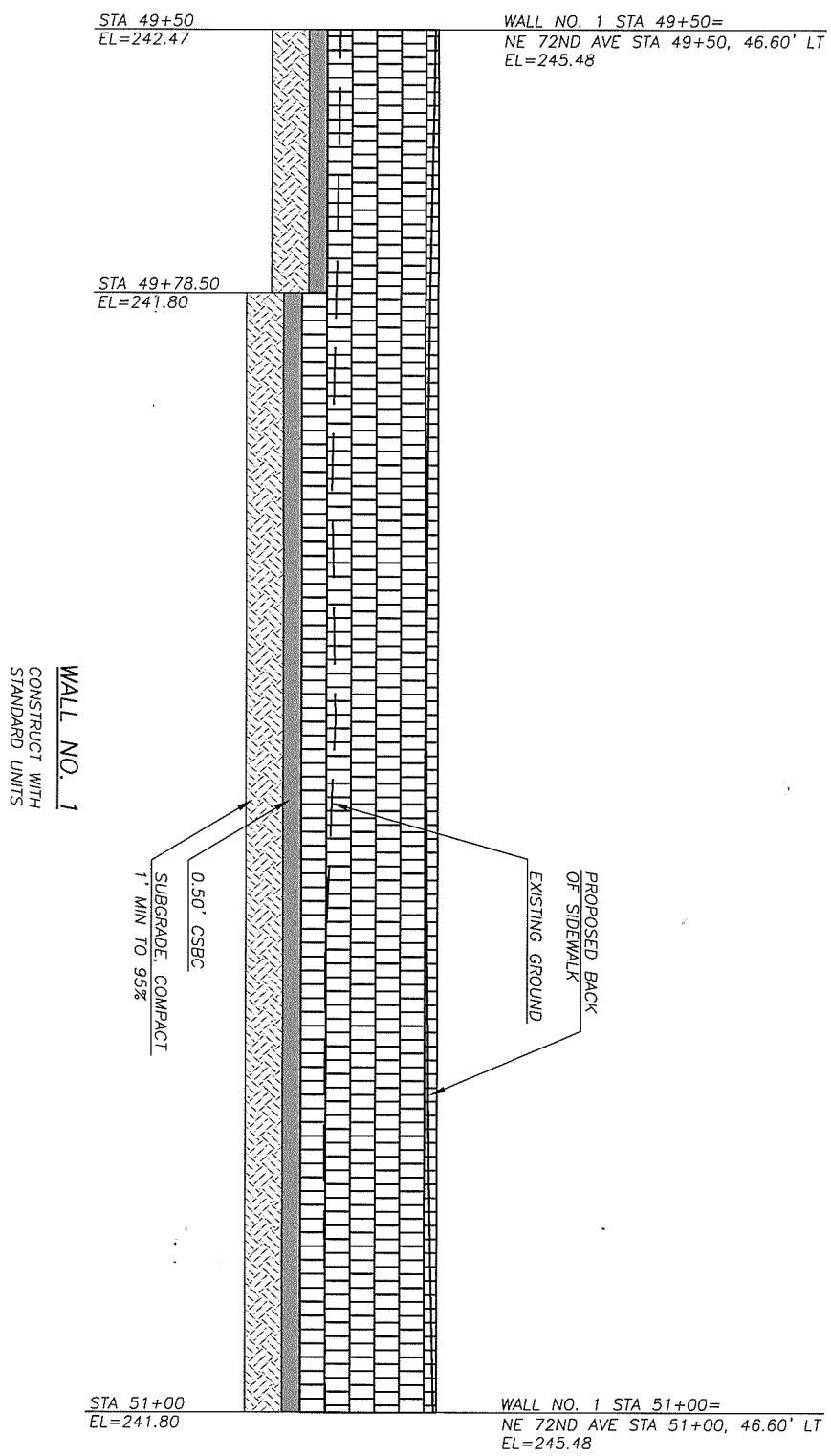

PRELIMINARY

proud past, promising future

CLARK COUNTY
WASHINGTON

DESIGN & ENGINEERING DIVISION
DESIGN SECTION

NE 72ND AVENUE
RETAINING WALL

JOHN MILNER
STATE OF WASHINGTON
31148
REGISTERED
PROFESSIONAL ENGINEER
EXPIRES:JULY 7, 2003

CALL 48 HOURS
BEFORE YOU DIG
1-800-
553-4344
"It's the Law"
NORTHWEST
UTILITIES
NOTIFICATION CENTER

DESIGNED	ME
DRAWN	KB
CRP	310122
HOR.	1"=10'
VERT.	1"=4'
DATE	7/23/04
DWG:	RW01
SHEET	OF

Base Leveling Pad Notes:

1. The leveling pad is to be constructed of crushed stone or 2,000 psi± unreinforced concrete
2. The base foundation is to be approved by the site geotechnical engineer prior to placement of the leveling pad.

Standard Unit	
Width:	18"
*Depth:	18"
Height:	8"
*Weight:	102 lbs

Cap Unit	
Width:	18"
*Depth:	10 1/2"
Height:	4"
*Weight:	45 lbs

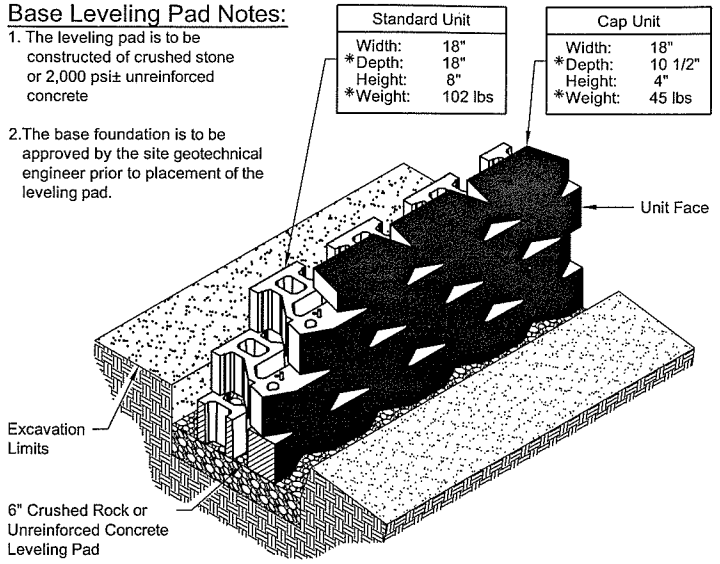

Standard Unit/Base Pad Isometric Section View

* Dimensions & Weight May Vary by Region

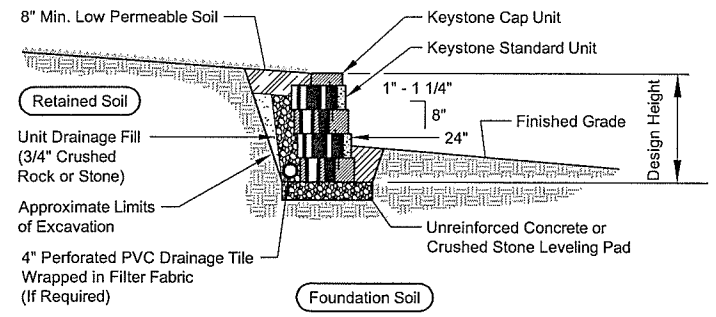

Typical Gravity Wall Section

Standard Unit - 1" Setback

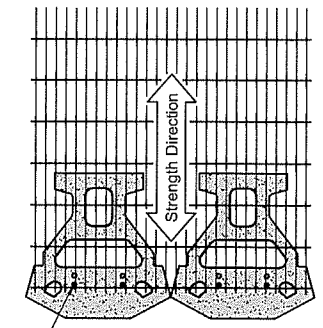

Geogrid is to be Placed on Level Backfill and Extended Over the Fiberglass Pins. Place Next Unit. Pull Grid Taught and Backfill. Stake as required.

Grid & Pin Connection

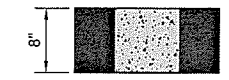

Standard Elevation

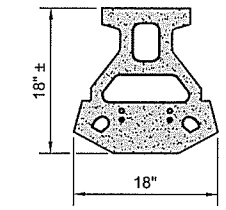

Standard Plan

Standard Unit

* Dimensions May Vary by Region

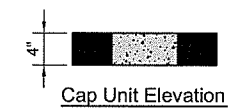

Cap Unit Elevation

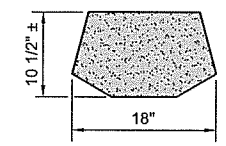

Cap Unit Plan

3-Plane Split Cap Unit Option

* Dimensions & Availability Will Vary by Region

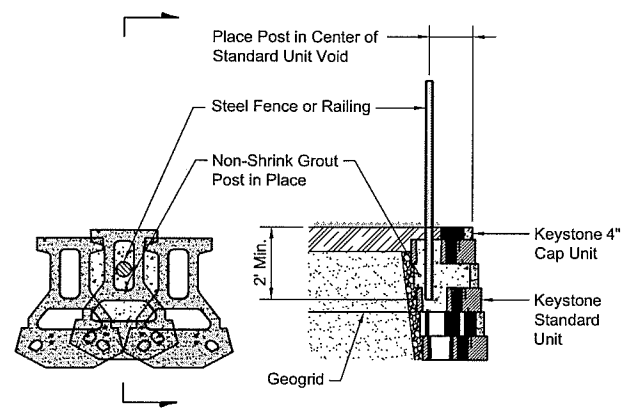

Fence Plan Detail

Fence SectionDetail

Standard Unit - 1" Setback

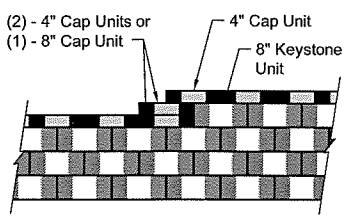

Note:

1. Secure all cap units with Keystone Kapseal or equal.

Top of Wall Steps

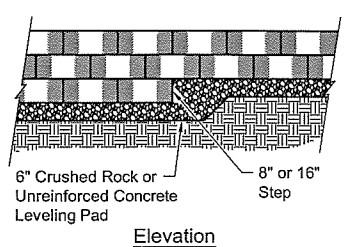

Elevation

Note:

1. The leveling pad is to be constructed of crushed stone or 2000 psi ± unreinforced concrete.

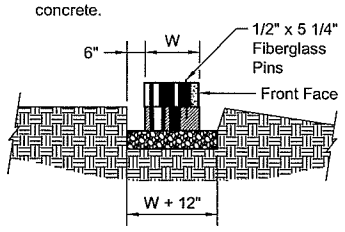

Section

Leveling Pad Detail

Note:

1. Auger through geogrid layers.
2. Backfill or concrete guardrail post in place.

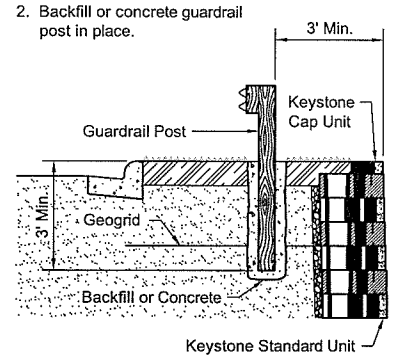

Typical Guardrail Detail

Standard Unit - Near Vertical Setback Shown

PRELIMINARY

DESIGNED ME
DRAWN KB
CRP 310122
HOR. 1"=10'
VERT. 1"=4'
DATE 7/23/04
DWG: RW02
SHEET OF

CALL 48 HOURS BEFORE YOU DIG 1-800-553-4344 "It's the Law" NORTHWEST UTILITIES NOTIFICATION CENTER

STATE OF WASHINGTON MICHAEL J. BEGLEYK 31148 REGISTERED PROFESSIONAL ENGINEER
EXPIRES JULY 7, 2005

DESIGN & ENGINEERING DIVISION
DESIGN SECTION

NE 72ND AVENUE
RETAINING WALL DETAILS

proud past, promising future
CLARK COUNTY WASHINGTON

N:\CIP\PROJECTS\310122-NE72Ave-H99toST Johns\DESIGN\DWGS\RW01-2.dwg, Layout1 (2), 10/20/2004 12:39:22 PM, begleyk

PRELIMINARY

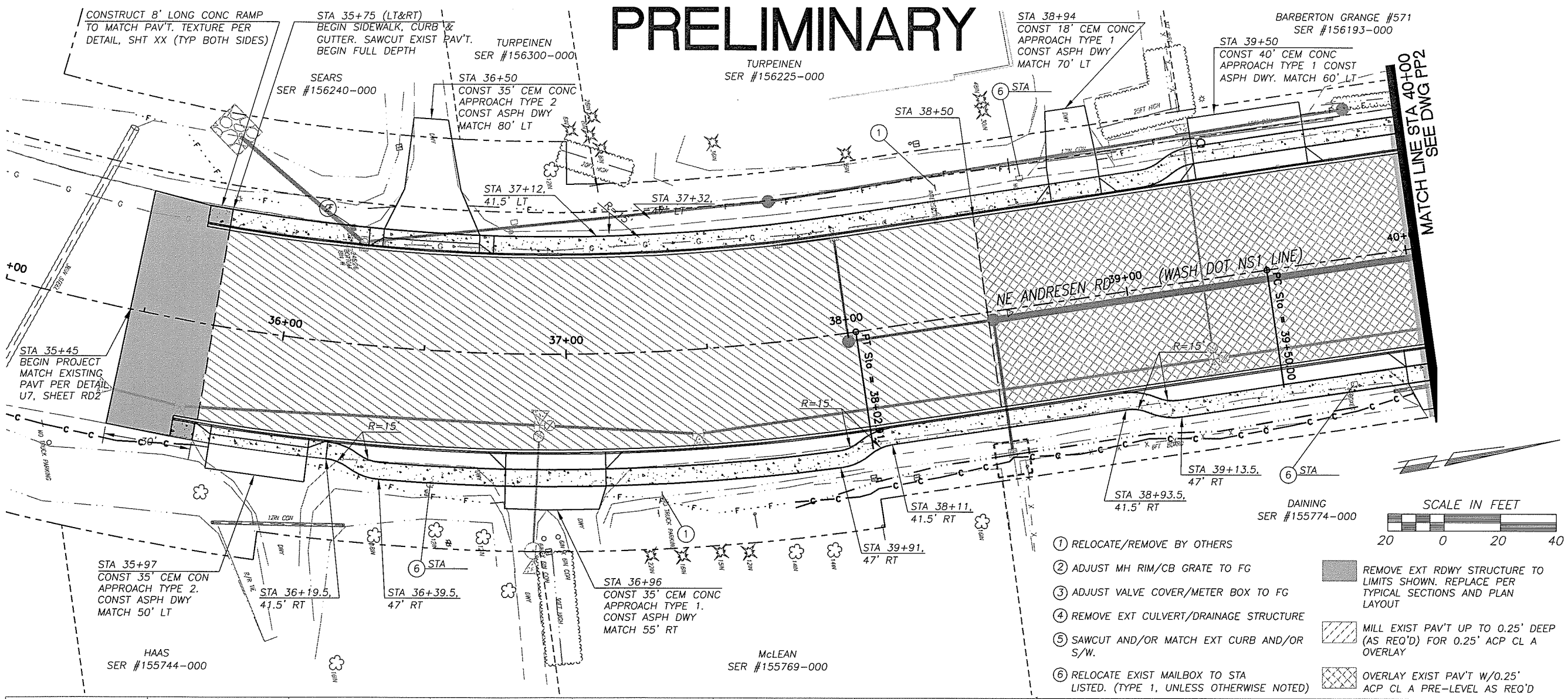

1. RELOCATE/REMOVE BY OTHERS
2. ADJUST MH RIM/CB GRATE TO FG
3. ADJUST VALVE COVER/METER BOX TO FG
4. REMOVE EXT CULVERT/DRAINAGE STRUCTURE
5. SAWCUT AND/OR MATCH EXT CURB AND/OR S/W.
6. RELOCATE EXIST MAILBOX TO STA LISTED. (TYPE 1, UNLESS OTHERWISE NOTED)

- REMOVE EXT RDWY STRUCTURE TO LIMITS SHOWN. REPLACE PER TYPICAL SECTIONS AND PLAN LAYOUT
- MILL EXIST PAV'T UP TO 0.25' DEEP (AS REQ'D) FOR 0.25' ACP CL A OVERLAY
- OVERLAY EXIST PAV'T W/0.25' ACP CL A PRE-LEVEL AS REQ'D

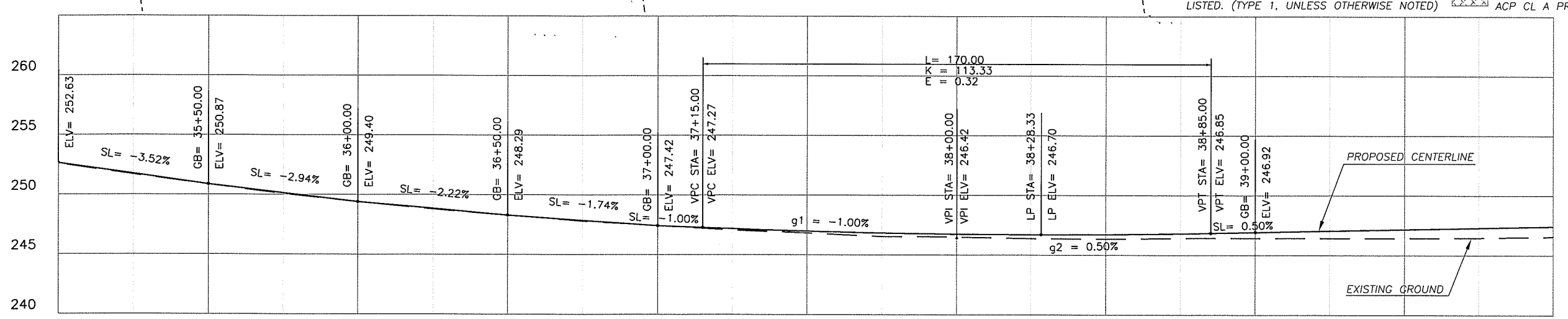

UNADJUSTED EARTHWORK QUANTITIES

EXCAVATION	230 CY
EMBANKMENT	490 CY

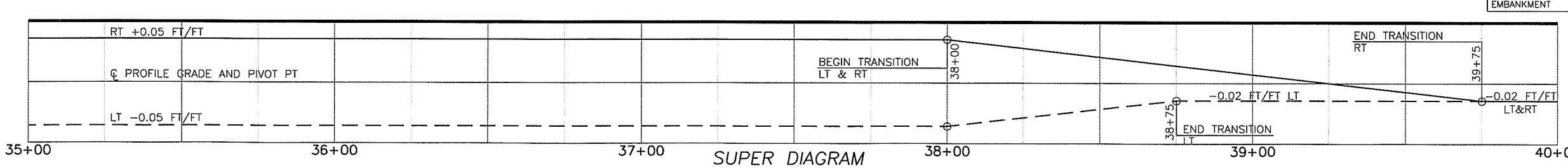

SUPER DIAGRAM

DESIGNED	MME
DRAWN	RRK
CRP	310122
HOR.	1"=20'
VERT.	1"=5'
DATE	6/20/03
DWG:	PP1
SHEET	OF

CALL 48 HOURS BEFORE YOU DIG 1-800-553-4344 "It's the Law" NORTHWEST UTILITIES NOTIFICATION CENTER

STATE OF WASHINGTON JAMES M. EMRICK 22630 PROFESSIONAL ENGINEER EXPIRES MAY 26, 2005

DESIGN & ENGINEERING DIVISION
DESIGN SECTION

NE 72ND AVENUE
PLAN & PROFILE (STA 35+00 TO 40+00)

proud past, promising future
CLARK COUNTY WASHINGTON

N:\CIP\PROJECTS\310122-NE72Ave-H99toSTJohns\DESIGN\DWGS\PP1.dwg, Layout1, 10/20/2004 12:44:56 PM, begleyk

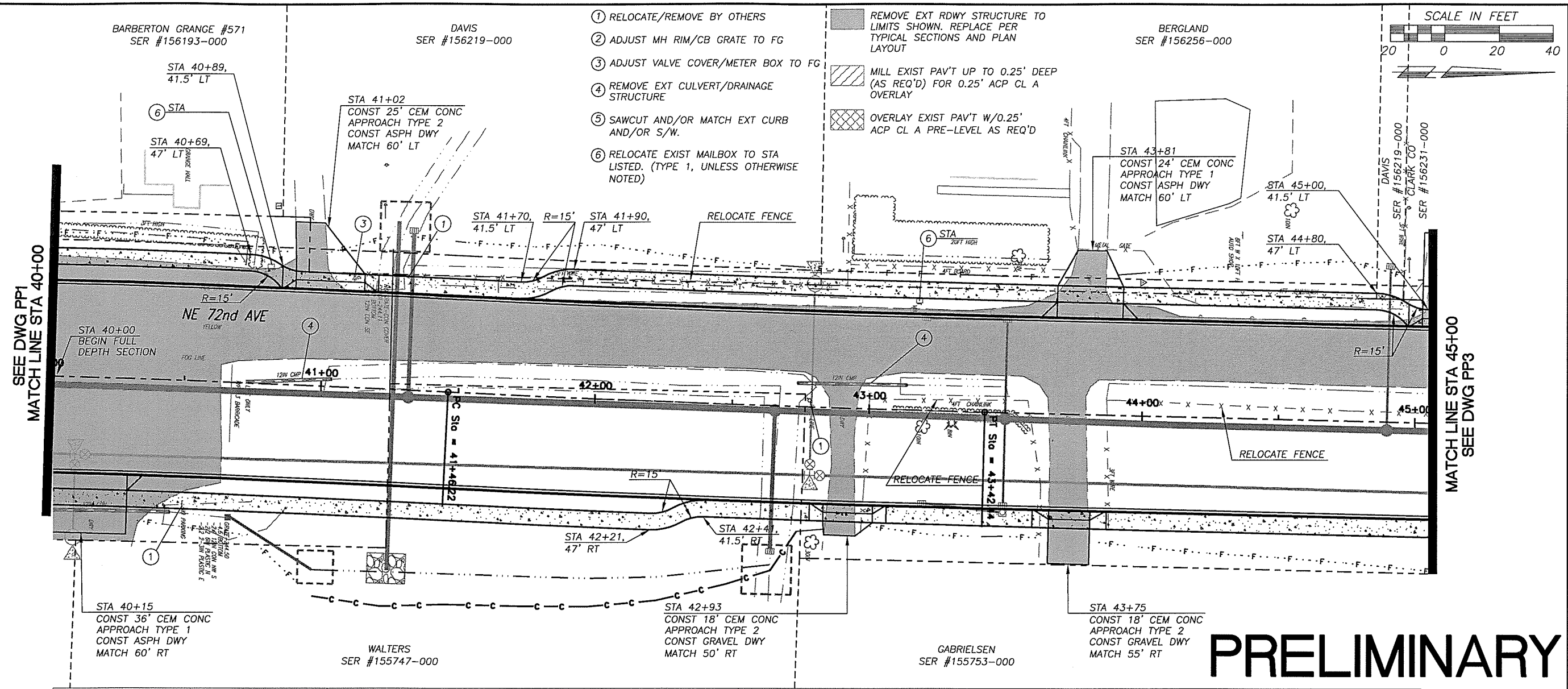

PRELIMINARY

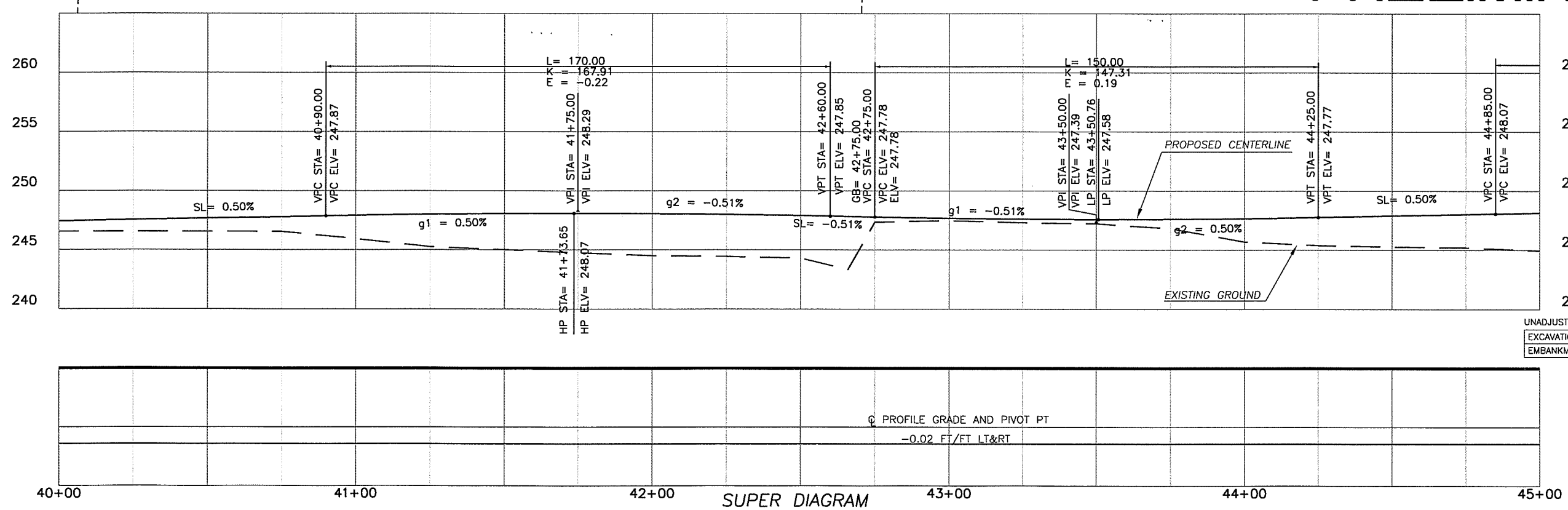

SUPER DIAGRAM

UNADJUSTED EARTHWORK QUANTITIES

EXCAVATION	1250 CY
EMBANKMENT	950 CY

DESIGNED	MME
DRAWN	RRK
CRP	310122
HOR.	1"=20'
VERT.	1"=5'
DATE	6/20/03
DWG:	PP2
SHEET	OF

CALL 48 HOURS BEFORE YOU DIG 1-800-553-4344 "It's the Law" NORTHWEST UTILITIES NOTIFICATION CENTER

STATE OF WASHINGTON STEVEN M. EDRICK 21202 REGISTERED PROFESSIONAL ENGINEER
EXPIRES MAY 28, 2005

DESIGN & ENGINEERING DIVISION
DESIGN SECTION

NE 72ND AVENUE
PLAN & PROFILE (STA 40+00 TO 45+00)

proud past, promising future
CLARK COUNTY WASHINGTON

N:\CIP\PROJECTS\310122-NE72Ave-H99toST.Johns\DESIGN\DWGS\PP2.dwg, Layout1, 10/20/2004 1:33:55 PM, begleyk

PRELIMINARY

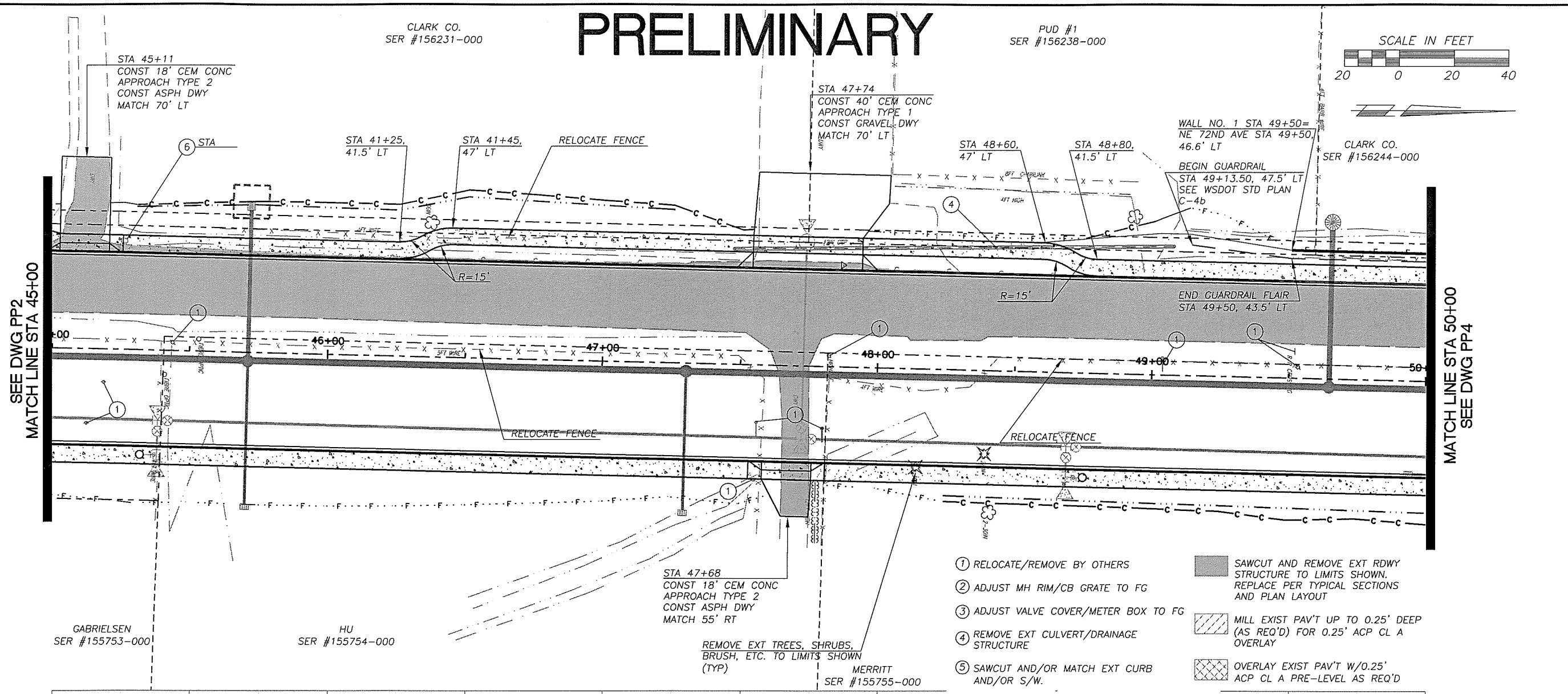

1. RELOCATE/REMOVE BY OTHERS
2. ADJUST MH RIM/CB GRATE TO FG
3. ADJUST VALVE COVER/METER BOX TO FG
4. REMOVE EXT CULVERT/DRAINAGE STRUCTURE
5. SAWCUT AND/OR MATCH EXT CURB AND/OR S/W.
6. RELOCATE EXIST MAILBOX TO STA LISTED. (TYPE 1, UNLESS OTHERWISE NOTED)

SAWCUT AND REMOVE EXT RDWY STRUCTURE TO LIMITS SHOWN. REPLACE PER TYPICAL SECTIONS AND PLAN LAYOUT

MILL EXIST PAV'T UP TO 0.25' DEEP (AS REQ'D) FOR 0.25' ACP CL A OVERLAY

OVERLAY EXIST PAV'T W/0.25' ACP CL A PRE-LEVEL AS REQ'D

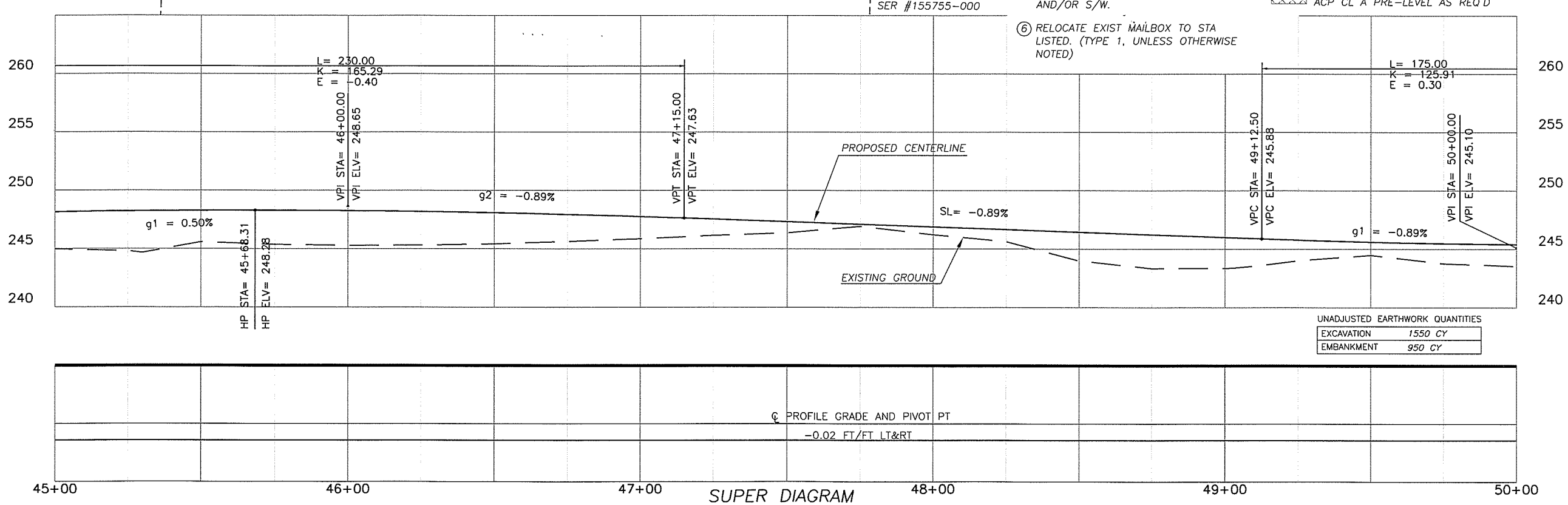

SUPER DIAGRAM

UNADJUSTED EARTHWORK QUANTITIES

EXCAVATION	1550 CY
EMBANKMENT	950 CY

DESIGNED	MME
DRAWN	RRK
CRP	310122
HOR.	1"=20'
VERT.	1"=5'
DATE	6/20/03
DWG:	PP3
SHEET	OF

CALL 48 HOURS BEFORE YOU DIG 1-800-553-4344 "It's the Law" NORTHWEST UTILITIES NOTIFICATION CENTER

MICHAEL M. EUDICK STATE OF WASHINGTON 23040 REGISTERED PROFESSIONAL ENGINEER
EXPIRES MAY 26, 2005

DESIGN & ENGINEERING DIVISION
DESIGN SECTION

NE 72ND AVENUE
PLAN & PROFILE (STA 45+00 TO 50+00)

proud past, promising future
CLARK COUNTY WASHINGTON

N:\CIP\PROJECTS\310122-NE72Ave-H99toST Johns\DES\GN\DWGS\PP3.dwg, Layout1, 10/20/2004 1:35:10 PM, begleyk

PRELIMINARY

SCALE IN FEET
20 0 20 40

CLARK CO.
SER#156244-000

SMITH
SER #156220-000

STA 52+54
CONST 32' CEM CONC
APPROACH TYPE 2
CONST GRAVEL DWY
MATCH 60' LT

CLARK CO.
SER #119590-008

WALL NO.1 STA 51+00=
NE 72ND AVE STA 51+00, 46.6' LT

BEGIN GUARDRAIL FLAIR
STA 51+00, 43.5' LT

END GUARDRAIL
STA 51+36.50, 47.5' LT
SEE WSDOT STD PLAN C-4b

CLARK CO.
SER #300002-000

PC 53+74.45, 5.5' RT*
PRC 54+14.83, 0.00*
PT 54+54.95, 5.5' LT*

SEE DWG PP3
MATCH LINE STA 50+00

MATCH LINE STA 55+00
SEE DWG PP5

RELOCATE FENCE

53+27.70, 5.5' RT*
BEGIN TYPE C
TRAFFIC CURB

NE 72ND AVENUE

51+00 52+00 53+00 54+00 55

R= 50

RELOCATE FENCE

GIBSON
SER #155756-000

RELOCATE FENCE

RELOCATE FENCE

REMOVE EXT TREES,
SHRUBS, BRUSH, ETC.
TO LIMITS SHOWN (TYP)

MERRITT
SER #155755-000

1. RELOCATE/REMOVE BY OTHERS
2. ADJUST MH RIM/CB GRATE TO FG
3. ADJUST VALVE COVER/METER BOX TO FG
4. REMOVE EXT CULVERT/DRAINAGE STRUCTURE
5. SAWCUT AND/OR MATCH EXT CURB AND/OR S/W.
6. RELOCATE EXIST MAILBOX TO STA LISTED. (TYPE 1, UNLESS OTHERWISE NOTED)

SAWCUT AND REMOVE EXT RDWY STRUCTURE TO LIMITS SHOWN. REPLACE PER TYPICAL SECTIONS AND PLAN LAYOUT

MILL EXIST PAV'T UP TO 0.25' DEEP (AS REQ'D) FOR 0.25' ACP CL A OVERLAY

OVERLAY EXIST PAV'T W/0.25' ACP CL A PRE-LEVEL AS REQ'D

MUTUAL MATERIALS COMPANY
SER #119460-000

*OFFSET IS TO
CENTER OF CURB

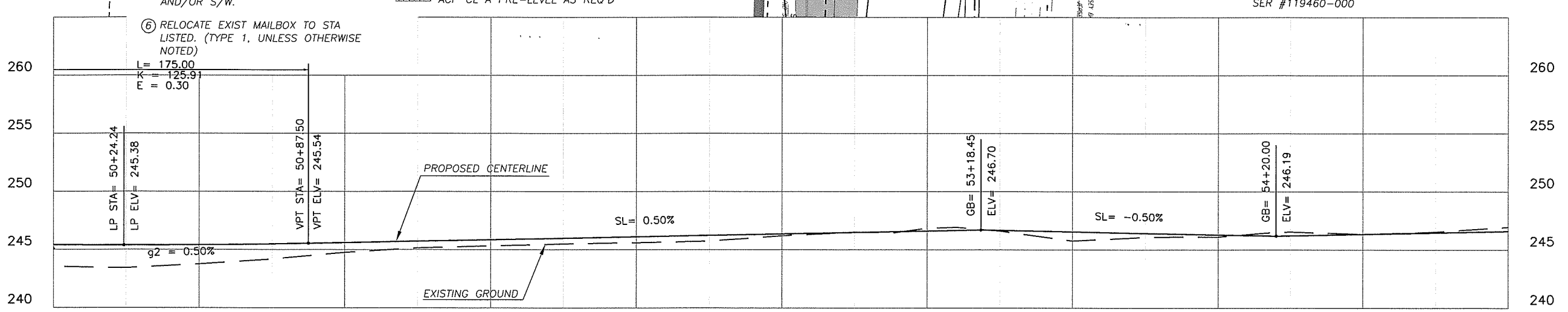

UNADJUSTED EARTHWORK QUANTITIES

EXCAVATION	2900 CY
EMBANKMENT	200 CY

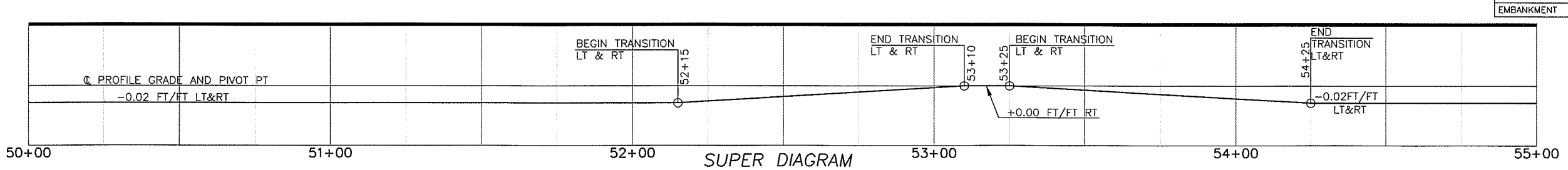

SUPER DIAGRAM

DESIGNED	MME
DRAWN	RRK
CRP	310122
HOR.	1"=20'
VERT.	1"=5'
DATE	6/20/03
DWG:	PP4
SHEET	OF

CALL 48 HOURS BEFORE YOU DIG
1-800-553-4344
"It's the Law"
NORTHWEST UTILITIES NOTIFICATION CENTER

MICHAEL M. EUDRICK
STATE OF WASHINGTON
29030
REGISTERED PROFESSIONAL ENGINEER
EXPIRES: MAY 26, 2005

DESIGN & ENGINEERING DIVISION
DESIGN SECTION

NE 72ND AVENUE
PLAN & PROFILE (STA 50+00 TO 55+00)

proud past, promising future
CLARK COUNTY
WASHINGTON

N:\CIP\PROJECTS\310122-NE72Ave-H99toST Johns\DESIGN\DWGS\PP4.dwg, Layout1, 10/20/2004 1:35:44 PM, begleyk

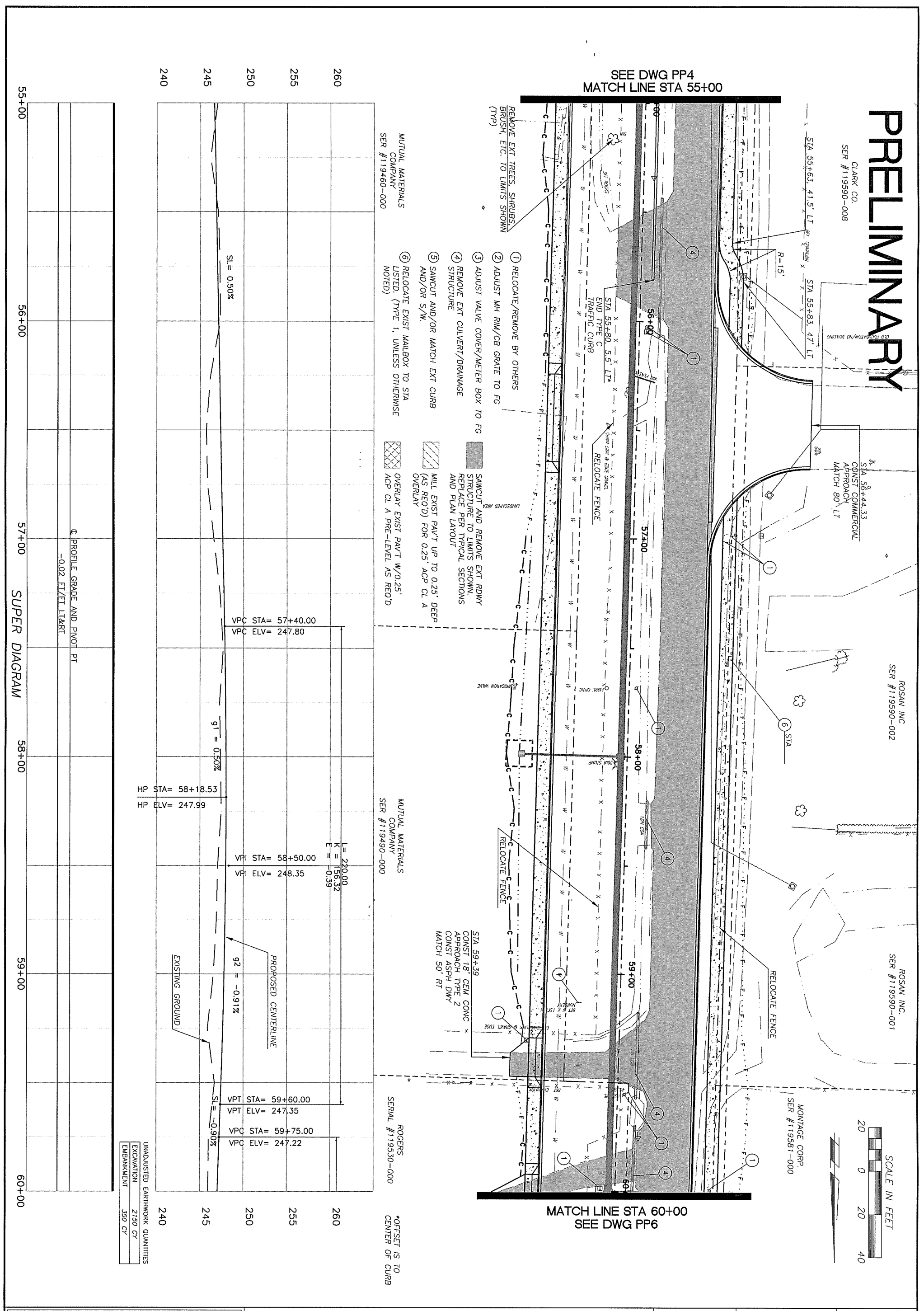

CLARK COUNTY WASHINGTON
proud past, promising future

DESIGN & ENGINEERING DIVISION
DESIGN SECTION

NE 72ND AVENUE
PLAN & PROFILE (STA 55+00 TO 60+00)

MICHAEL M. ENRICK
STATE OF WASHINGTON
29030
REGISTERED PROFESSIONAL ENGINEER
EXPIRES: MAY 26, 2005

CALL 48 HOURS BEFORE YOU DIG
1-800-553-4344
"It's the Law"
NORTHWEST UTILITIES NOTIFICATION CENTER

DESIGNED	MME
DRAWN	RRK
CRP	310122
HOR.	1"=20'
VERT.	1"=5'
DATE	6/20/03
DWG:	PP5
SHEET	OF

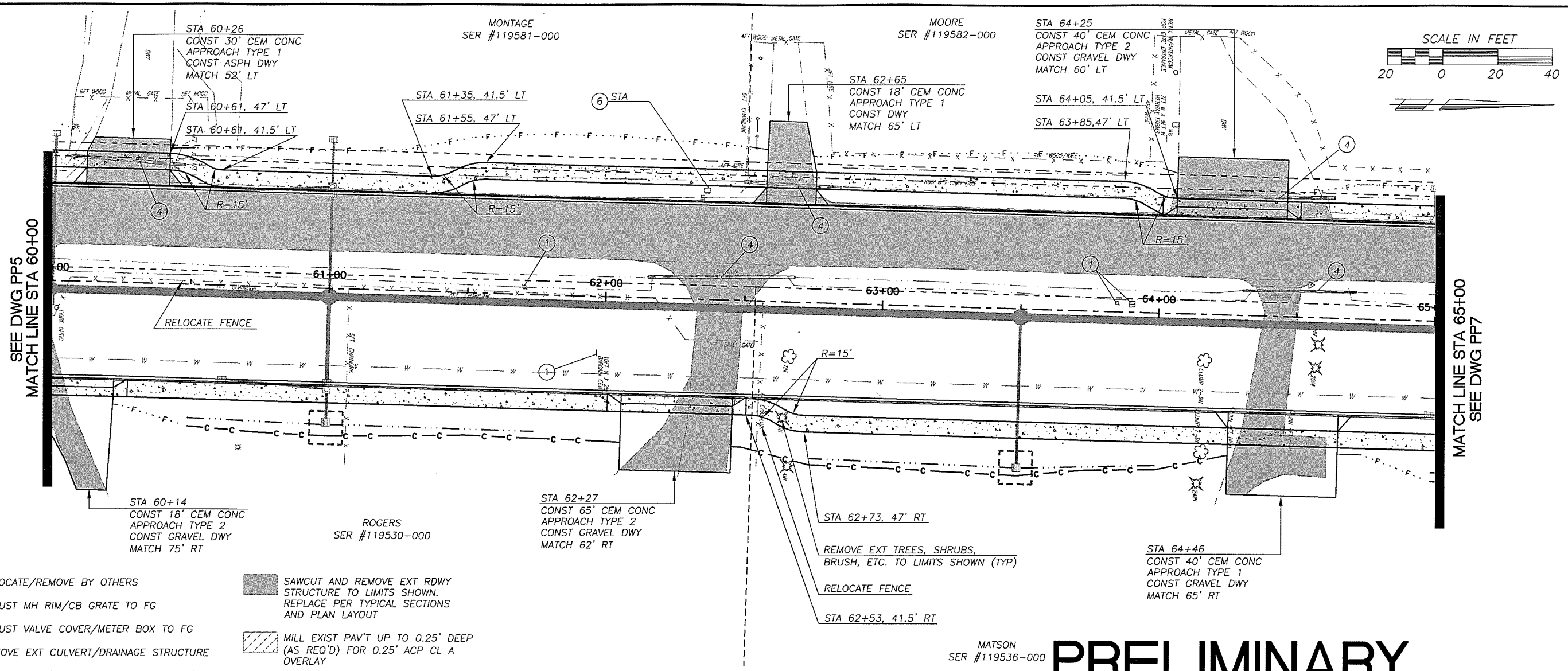

PRELIMINARY

(1) RELOCATE/REMOVE BY OTHERS

(2) ADJUST MH RIM/CB GRATE TO FG

(3) ADJUST VALVE COVER/METER BOX TO FG

(4) REMOVE EXT CULVERT/DRAINAGE STRUCTURE

(5) SAWCUT AND/OR MATCH EXT CURB AND/OR S/W.

(6) RELOCATE EXIST MAILBOX TO STA LISTED. (TYPE 1, UNLESS OTHERWISE NOTED)

SAWCUT AND REMOVE EXT RDWY STRUCTURE TO LIMITS SHOWN. REPLACE PER TYPICAL SECTIONS AND PLAN LAYOUT

MILL EXIST PAV'T UP TO 0.25' DEEP (AS REQ'D) FOR 0.25' ACP CL A OVERLAY

OVERLAY EXIST PAV'T W/0.25' ACP CL A PRE-LEVEL AS REQ'D

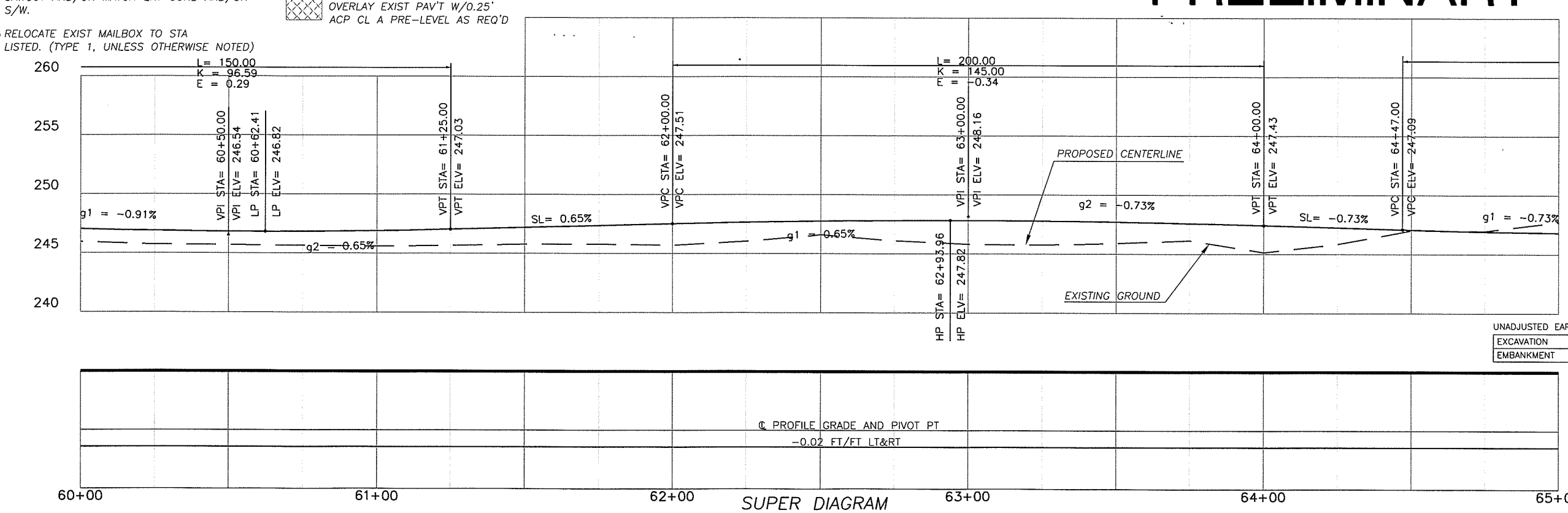

SUPER DIAGRAM

UNADJUSTED EARTHWORK QUANTITIES

EXCAVATION	1600
EMBANKMENT	600

DESIGNED	MME
DRAWN	RRK
CRP	310122
HOR.	1"=20'
VERT.	1"=5'
DATE	6/20/03
DWG:	PP6
SHEET	OF

CALL 48 HOURS BEFORE YOU DIG 1-800-553-4344 "It's the Law" NORTHWEST UTILITIES NOTIFICATION CENTER

STATE OF WASHINGTON MICHAEL M. EMICK REGISTERED PROFESSIONAL ENGINEER 19800 EXPIRES: MAY 28, 2005

DESIGN & ENGINEERING DIVISION
DESIGN SECTION

NE 72ND AVENUE
PLAN & PROFILE (STA 60+00 TO 65+00)

proud past, promising future
CLARK COUNTY WASHINGTON

N:\CIP\PROJECTS\310122-NE72Ave-H99toSTJohns\DESIGN\DWGS\PP6.dwg, Layout1, 10/20/2004 1:37:06 PM, begleyk

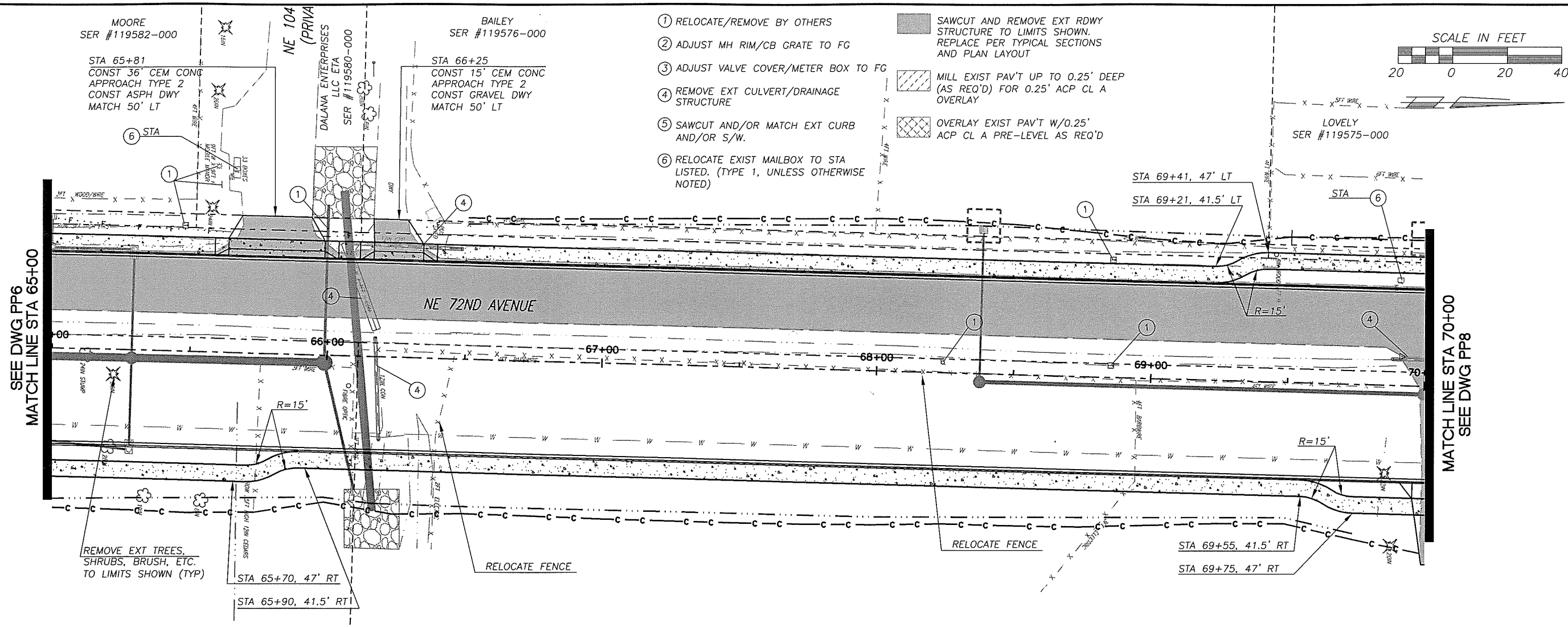

PRELIMINARY

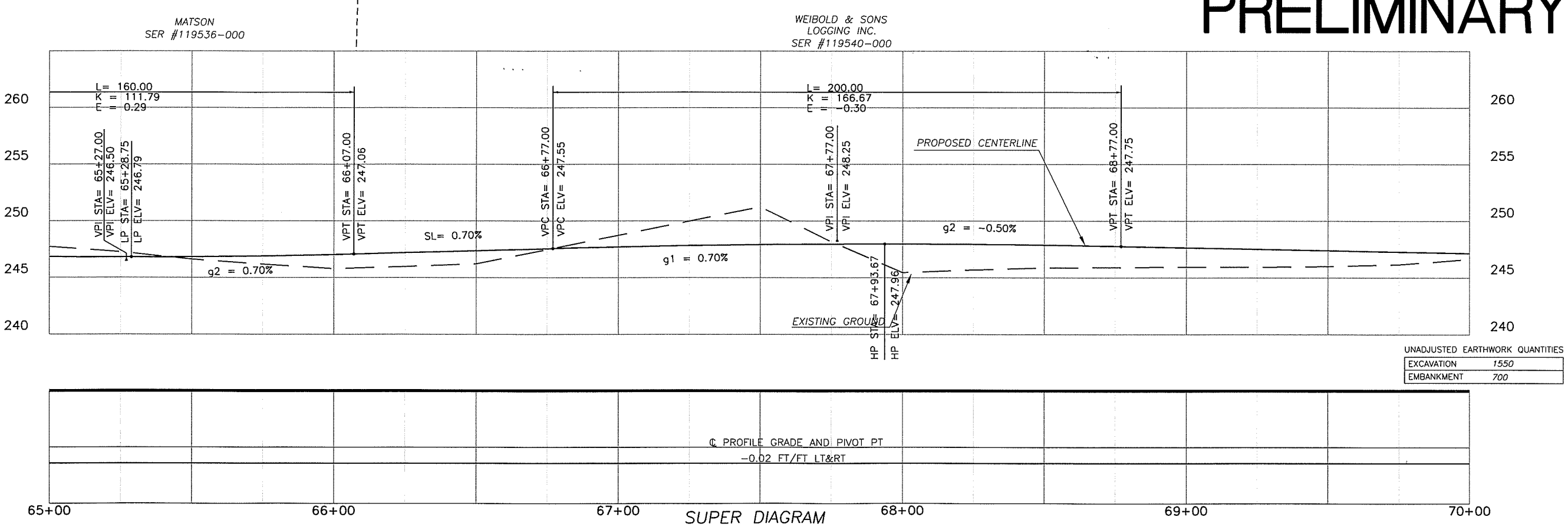

SUPER DIAGRAM

UNADJUSTED EARTHWORK QUANTITIES

EXCAVATION	1550
EMBANKMENT	700

DESIGNED	MME
DRAWN	RRK
CRP	310122
HOR.	1"=20'
VERT.	1"=5'
DATE	6/20/03
DWG.	PP7
SHEET	OF

CALL 48 HOURS BEFORE YOU DIG 1-800-553-4344 "It's the Law" NORTHWEST UTILITIES NOTIFICATION CENTER

MICHAEL M. EDDICK STATE OF WASHINGTON 37127 REGISTERED PROFESSIONAL ENGINEER EXPIRES MAY 28, 2005

DESIGN & ENGINEERING DIVISION
DESIGN SECTION

NE 72ND AVENUE
PLAN & PROFILE (STA 65+00 TO 70+00)

proud past, promising future
CLARK COUNTY WASHINGTON

N:\CIP\PROJECTS\310122-NE72Ave-H99toST Johns\DESIGN\DWGS\PP7.dwg, Layout1, 10/20/2004 1:38:36 PM, begleyk

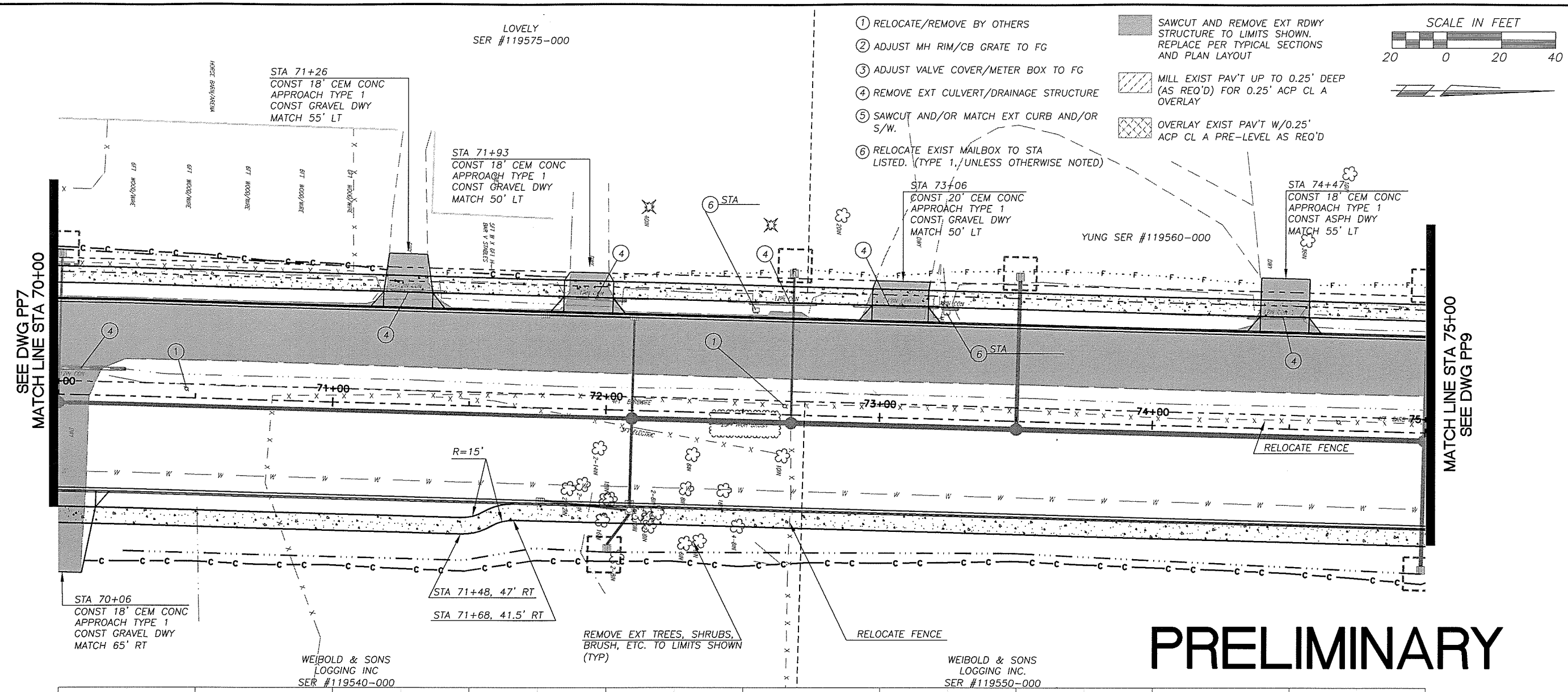

PRELIMINARY

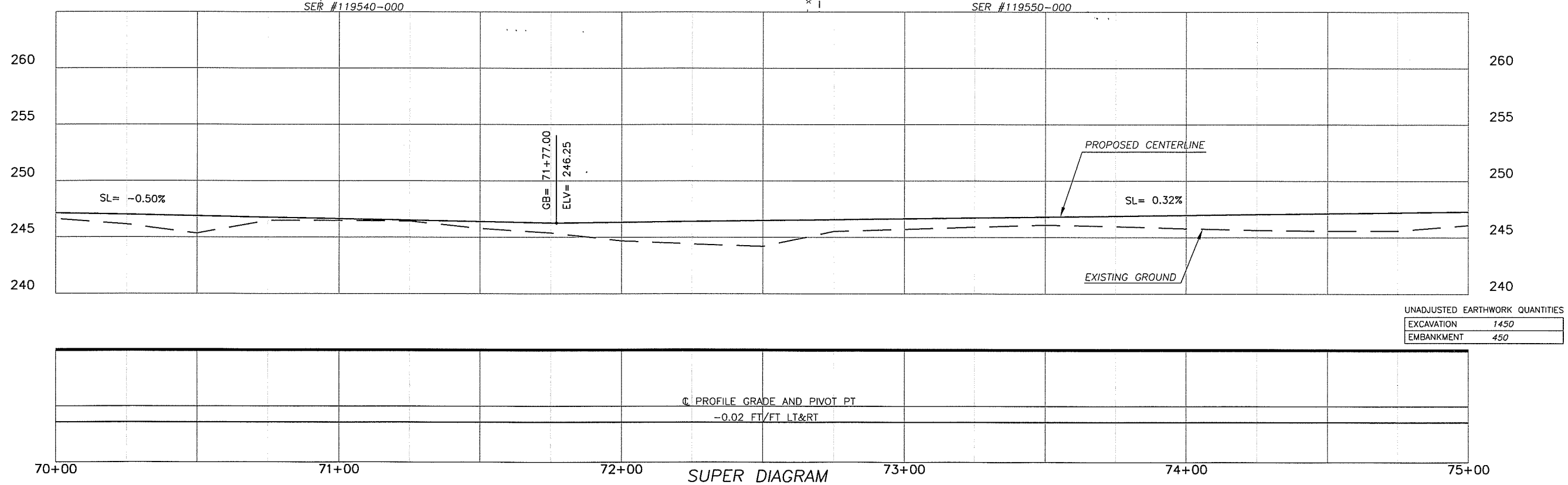

UNADJUSTED EARTHWORK QUANTITIES

EXCAVATION	1450
EMBANKMENT	450

DESIGNED	MME
DRAWN	RRK
CRP	310122
HOR.	1"=20'
VERT.	1"=5'
DATE	6/20/03
DWG:	PP8
SHEET	OF

CALL 48 HOURS BEFORE YOU DIG 1-800-553-4344 "It's the Law" NORTHWEST UTILITIES NOTIFICATION CENTER

MICHAEL M. EMBRE STATE OF WASHINGTON 17777 REGISTERED PROFESSIONAL ENGINEER
EXPIRES JULY 26, 2005

DESIGN & ENGINEERING DIVISION
DESIGN SECTION

NE 72ND AVENUE
PLAN & PROFILE (STA 70+00 TO 75+00)

proud past, promising future
CLARK COUNTY WASHINGTON

N:\CIP\PROJECTS\310122-NE72Ave-H99toSTJohns\DESIGN\DWGS\PP8.dwg, Layout1, 10/20/2004 1:39:10 PM, beglerjk

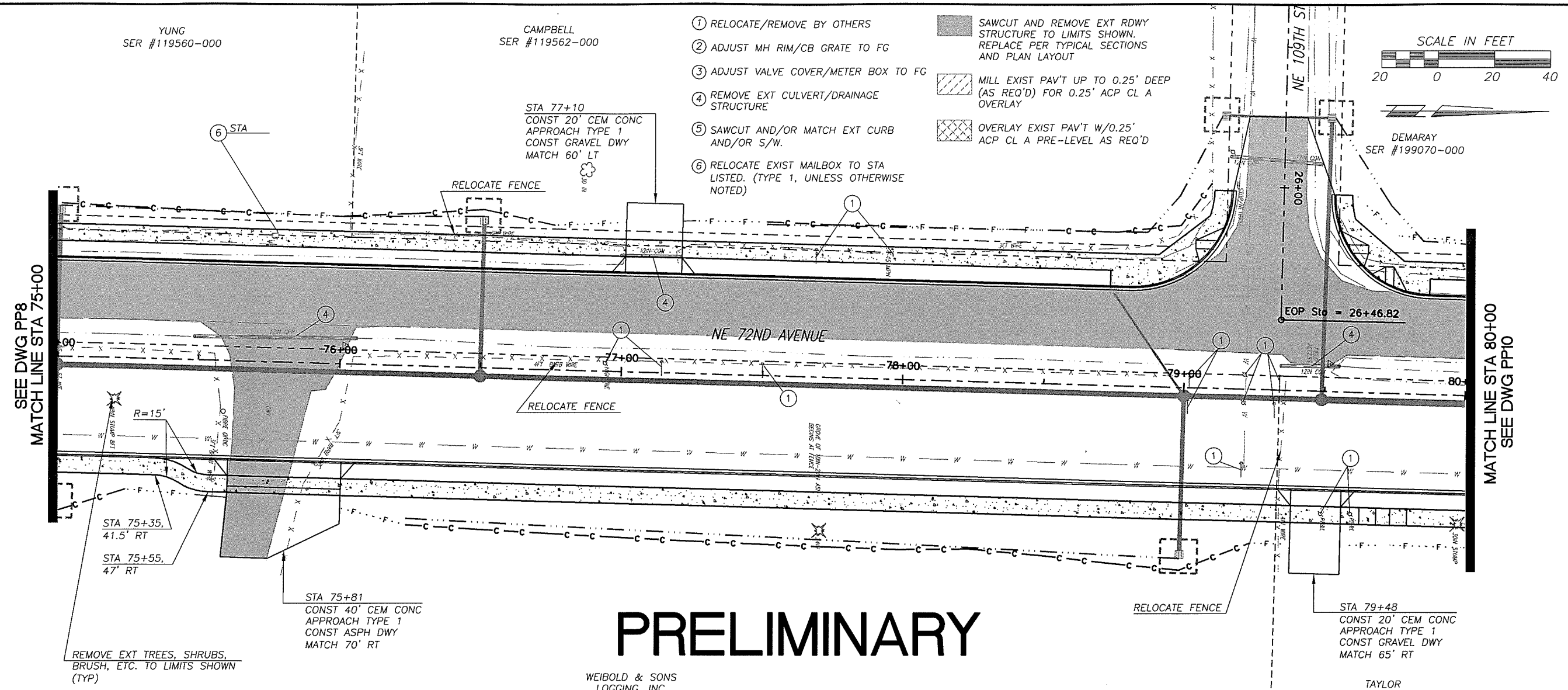

PRELIMINARY

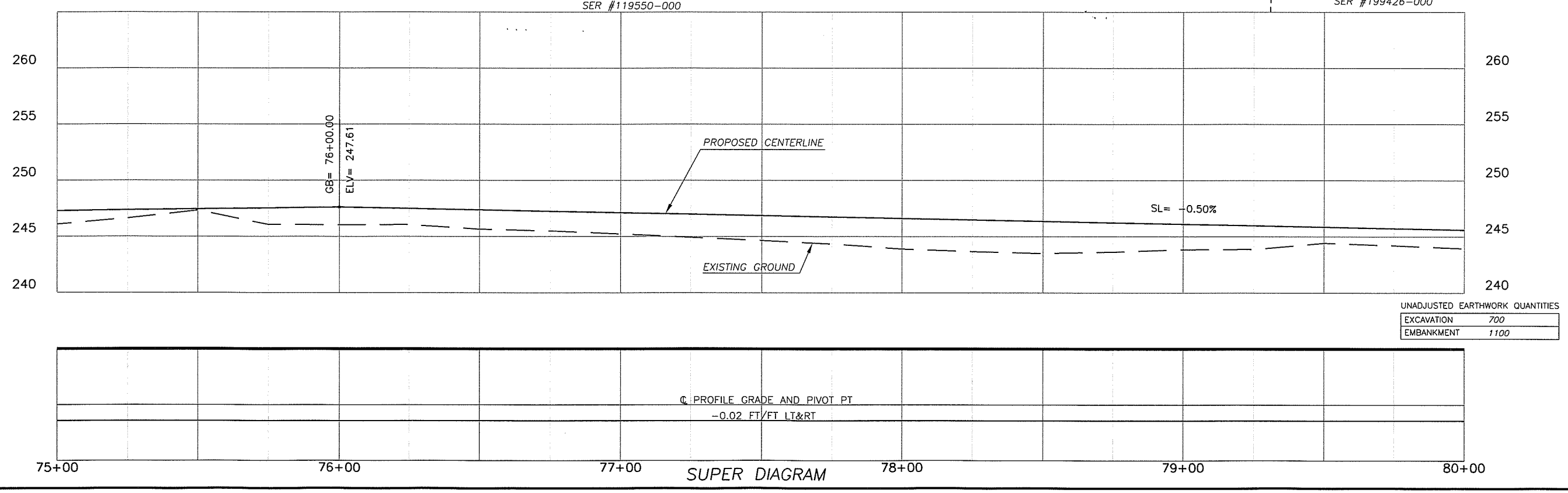

UNADJUSTED EARTHWORK QUANTITIES

EXCAVATION	700
EMBANKMENT	1100

DESIGNED	MME
DRAWN	RRK
CRP	310122
HOR.	1"=20'
VERT.	1"=5'
DATE	6/20/03
DWG:	PP9
SHEET	OF

CALL 48 HOURS BEFORE YOU DIG 1-800-553-4344 "It's the Law" NORTHWEST UTILITIES NOTIFICATION CENTER

STATE OF WASHINGTON JAMES M. EUBICK REGISTERED PROFESSIONAL ENGINEER EXPIRES MAY 26, 2005

DESIGN & ENGINEERING DIVISION
DESIGN SECTION

NE 72ND AVENUE
PLAN & PROFILE (STA 75+00 TO 80+00)

proud past, promising future
CLARK COUNTY WASHINGTON

N:\CIP\PROJECTS\310122-NE72Ave-H99toSTJohns\DESIGN\DWGS\PP9.dwg, Layout1, 10/20/2004 1:39:45 PM, beglerk

PRELIMINARY

DEMARAY SER #199070-000
SCRIBNER SER #199208-000
DEMARAY SER #199070-000
DEMARAY SER #199324-000
DEMARAY SER #199273-000
BLOEMKE SER #199173-000
DEMARAY #199090-000
TAYLOR SER #199426-000
HOMESTEAD WEST LTD SER #199429-005

SCALE IN FEET
20 0 20 40

STA 81+51
CONST 18' CEM CONC
APPROACH TYPE 2
CONST GRAVEL DWY
MATCH 55' LT

STA 82+54
CONST 18' CEM CONC
APPROACH TYPE 2
CONST GRAVEL DWY
MATCH 50' LT

STA 82+63.10
END FULL DEPTH SECTION.
SAWCUT & MATCH EXIST
CURB SIDEWALK

BOP Sta = 0+00.0000

NE 72ND AVENUE

PC Sta = 83+11.43

TO BE BUILT AS PART
OF COUNTY ROAD
PROJECT #301422
NE ST. JOHNS ROAD

NE 110th ST (PRIVATE)

SEE DWG PP9
MATCH LINE STA 80+00

MATCH LINE STA 85+00
SEE DWG PP11

REMOVE EXT TREES, SHRUBS, BRUSH, ETC. TO LIMITS SHOWN (TYP)

(1) RELOCATE/REMOVE BY OTHERS
(2) ADJUST MH RIM/CB GRATE TO FG
(3) ADJUST VALVE COVER/METER BOX TO FG
(4) REMOVE EXT CULVERT/DRAINAGE STRUCTURE
(5) SAWCUT AND/OR MATCH EXT CURB AND/OR S/W.
(6) RELOCATE EXIST MAILBOX TO STA LISTED. (TYPE 1, UNLESS OTHERWISE NOTED)

SAWCUT AND REMOVE EXT RDWY STRUCTURE TO LIMITS SHOWN. REPLACE PER TYPICAL SECTIONS AND PLAN LAYOUT

MILL EXIST PAV'T UP TO 0.25' DEEP (AS REQ'D) FOR 0.25' ACP CL A OVERLAY

OVERLAY EXIST PAV'T W/0.25' ACP CL A PRE-LEVEL AS REQ'D

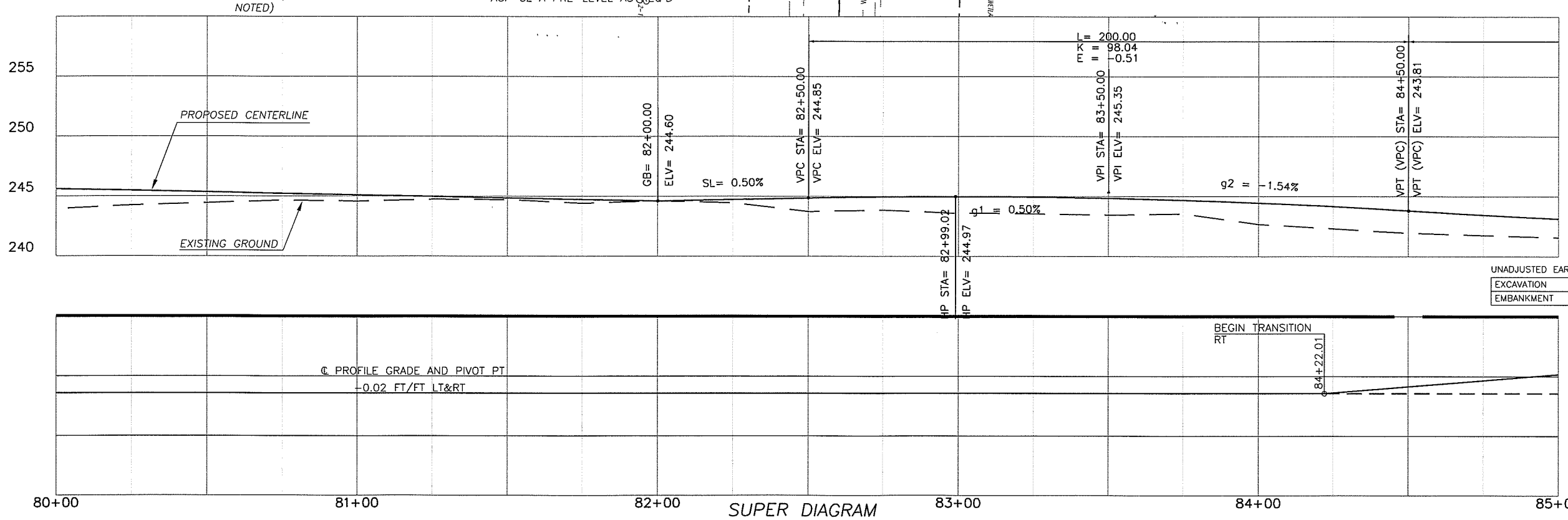

SUPER DIAGRAM

UNADJUSTED EARTHWORK QUANTITIES

EXCAVATION	750
EMBANKMENT	250

DESIGNED	MME
DRAWN	RRK
CRP	310122
HOR.	1"=20'
VERT.	1"=5'
DATE	6/20/03
DWG:	PP10
SHEET	OF

CALL 48 HOURS BEFORE YOU DIG 1-800-553-4344 "It's the Law" NORTHWEST UTILITIES NOTIFICATION CENTER

MICHAEL M. EMRICK STATE OF WASHINGTON 22400 REGISTERED PROFESSIONAL ENGINEER EXPIRES MAY 26, 2005

DESIGN & ENGINEERING DIVISION
DESIGN SECTION

NE 72ND AVENUE
PLAN & PROFILE (STA 80+00 TO 85+00)

proud past, promising future
CLARK COUNTY WASHINGTON

N:\CIP\PROJECTS\310122-NE72Ave-H99toSTJohns\DESIGN\DWGS\PP10.dwg, Layout1, 10/20/2004 1:40:49 PM, beglayk

N:\CIP\PROJECTS\310122-NE72Ave-H99toST\Johns\DESIGN\DWGS\PP11.dwg, Layout1, 10/20/2004 1:41:10 PM, begleyk

PRELIMINARY

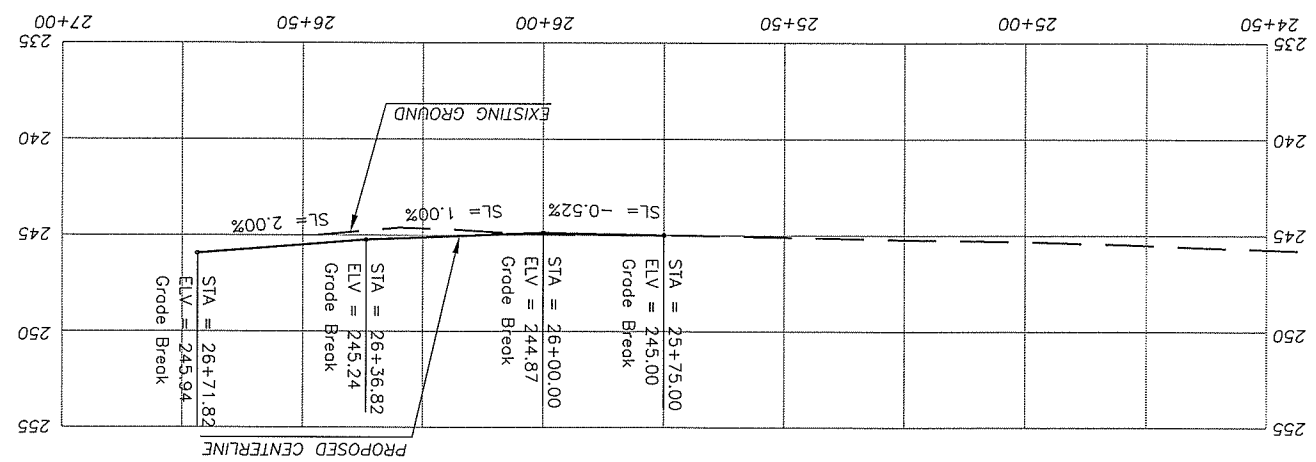

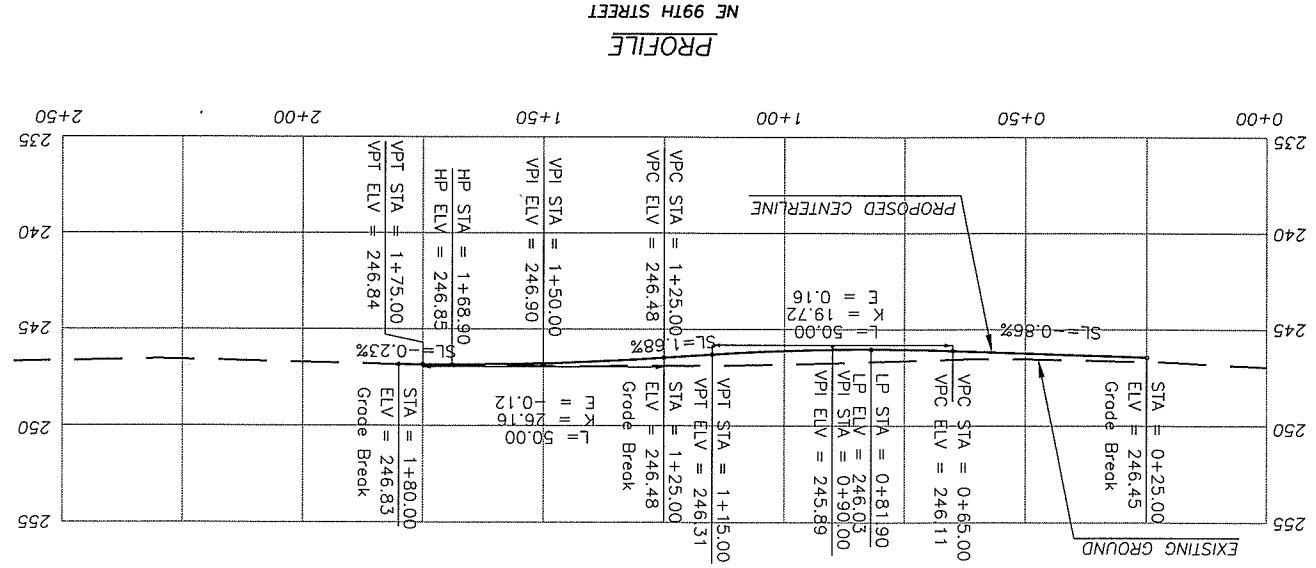

SCALE IN FEET

20 0 20 40

CLARK COUNTY WASHINGTON

proud past, promising future

DESIGN & ENGINEERING DIVISION

DESIGN SECTION

NE 72ND AVENUE

PROFILES

NE 99TH STREET AND NE 109TH STREET

MICHAEL M. EMRICK
STATE OF WASHINGTON
PROFESSIONAL ENGINEER
EXPIRES MAY 26, 2005

CALL 48 HOURS BEFORE YOU DIG
1-800-553-4344
"It's the Law"
NORTHWEST UTILITIES NOTIFICATION CENTER

DESIGNED	MME
DRAWN	RRK
CRP	310122
HOR.	1"=20'
VERT.	1"=5'
DATE	6/20/03
DWG:	PP11
SHEET	OF

NOTES:

1. CONTRACTOR SHALL FIELD VERIFY (POTHOLE) ALL POTENTIAL UTILITY CROSSINGS PRIOR TO CONSTRUCTION. IF DIRECT CONFLICT EXISTS, NOTIFY THE ENGINEER AND UTILITY COMPANY. PROCEED ONLY AS DIRECTED AND PER STANDARD POLICY AND REGULATIONS. (COST INCLUDED IN BID ITEMS FOR STORM SEWER AND CULVERT PIPE).

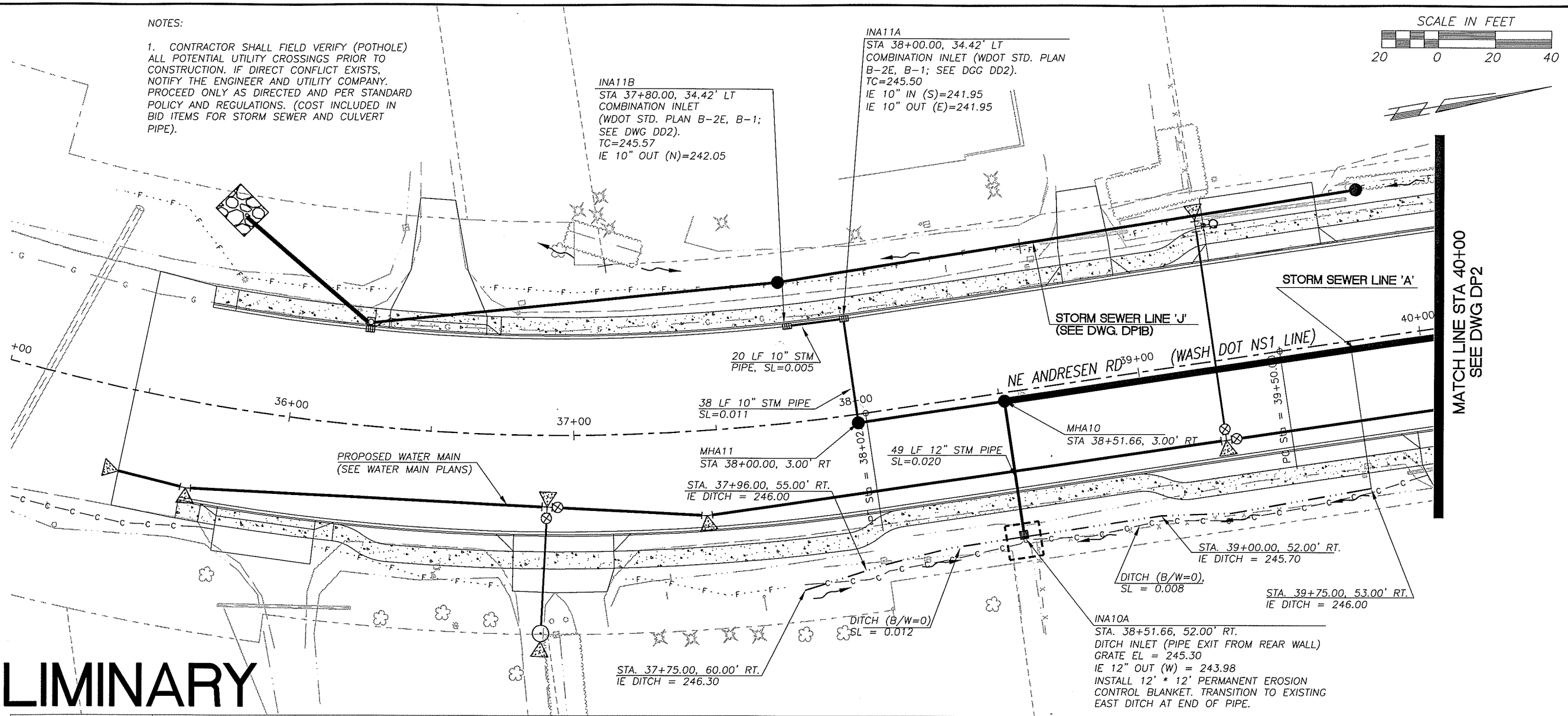

PRELIMINARY

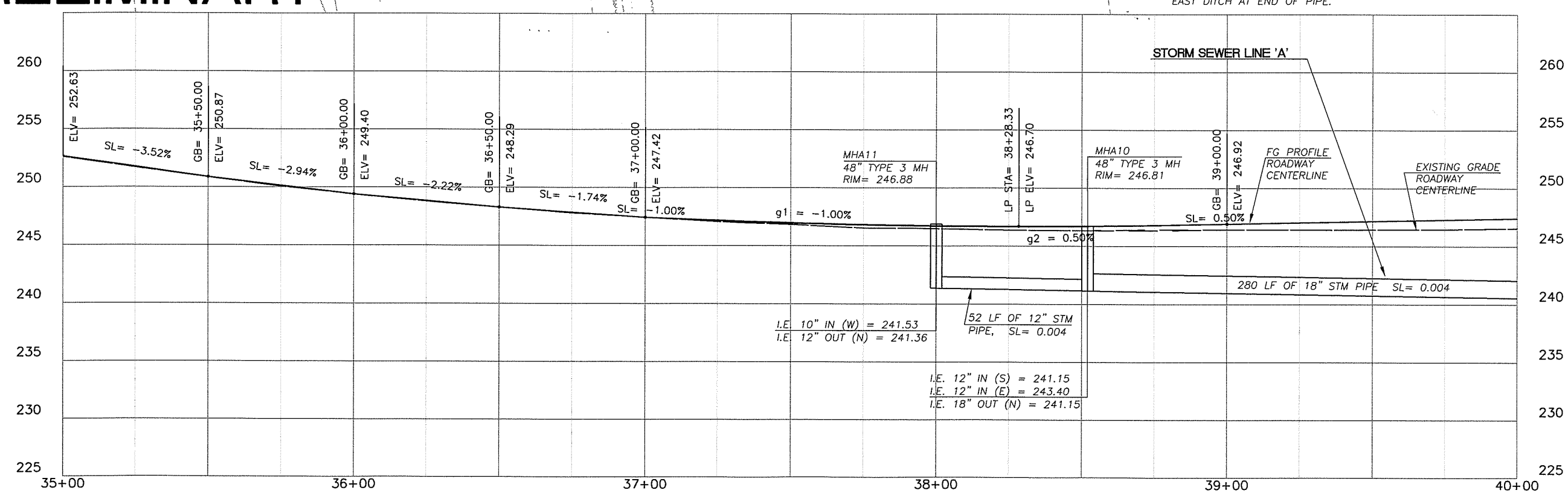

DESIGNED	JM
DRAWN	RRK
CRP	310122
HOR.	1"=20'
VERT.	1"=5'
DATE	10/29/04
DWG:	DP1
SHEET	OF

CALL 48 HOURS BEFORE YOU DIG
1-800-553-4344
"It's the Law"
NORTHWEST UTILITIES NOTIFICATION CENTER

STATE OF WASHINGTON
MILNE
31148
REGISTERED PROFESSIONAL ENGINEER
EXPIRES: JULY 7, 2005

DESIGN & ENGINEERING DIVISION
DESIGN SECTION

NE 72ND AVENUE
DRAINAGE PLAN (STA 35+00 TO 40+00)

proud past, promising future
CLARK COUNTY
WASHINGTON

N:\CIP\PROJECTS\310122-NE72Ave-I99toSTJohns\DESIGN\DWGS\DP1.dwg, 10/26/2004 7:29:50 AM, kerlinr

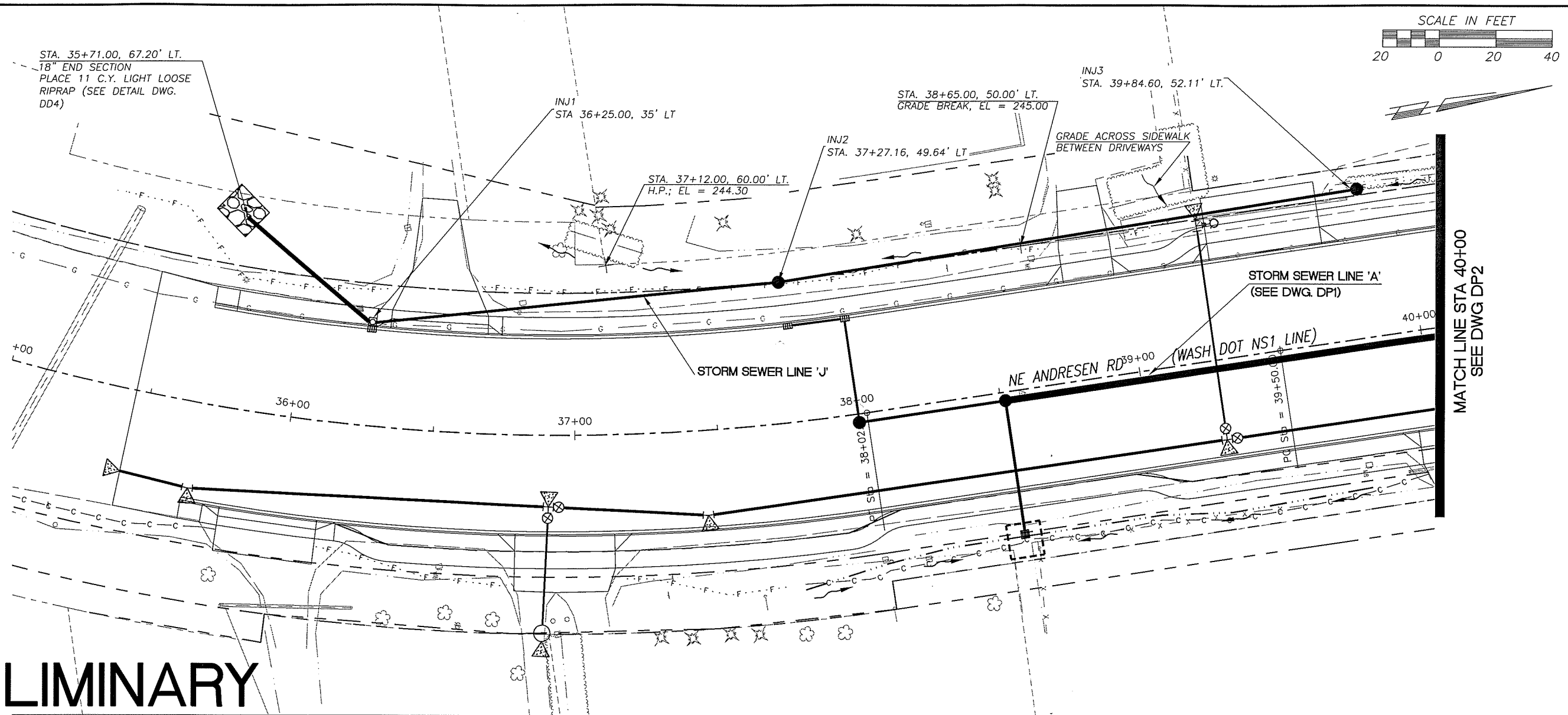

PRELIMINARY

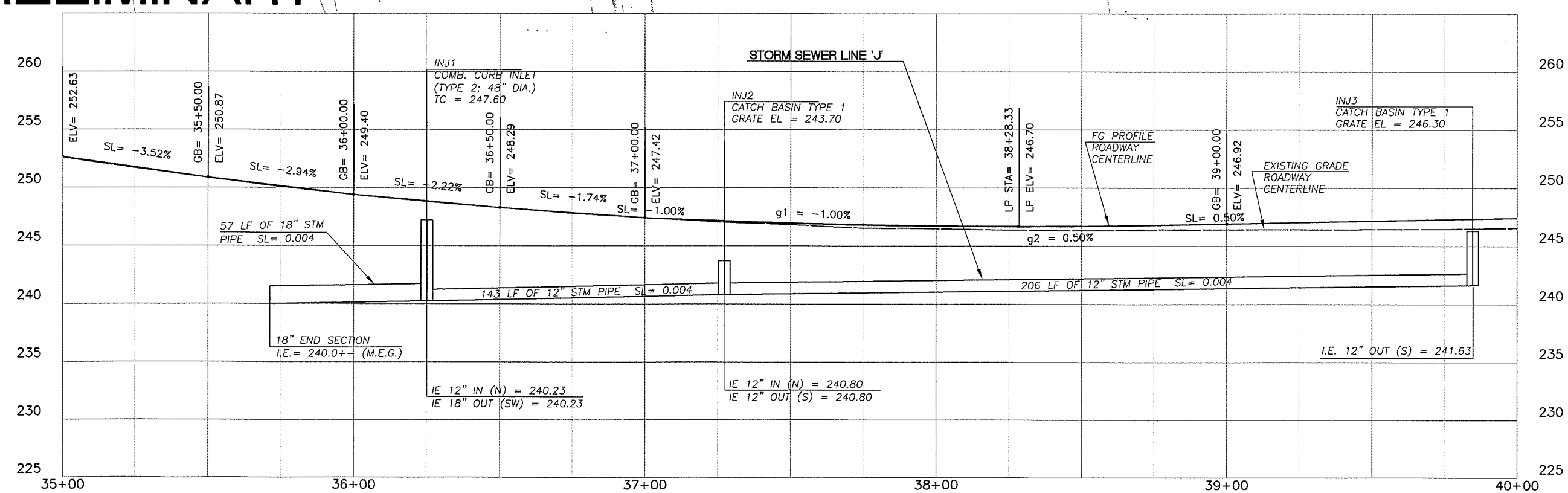

DESIGNED	JM
DRAWN	RRK
CRP	310122
HOR.	1"=20'
VERT.	1"=5'
DATE	10/29/04
DWG:	DP1B
SHEET	OF

CALL 48 HOURS BEFORE YOU DIG
1-800-553-4344
"It's the Law"
NORTHWEST UTILITIES NOTIFICATION CENTER

STATE OF WASHINGTON
MILTON R. ROBERTSON
11148
REGISTERED PROFESSIONAL ENGINEER
EXPIRES JULY 7, 2003

DESIGN & ENGINEERING DIVISION
DESIGN SECTION

NE 72ND AVENUE: DRAINAGE PLAN
(STA 35+00 TO 40+00; STORM SEWER LINE "J")

proud past, promising future
CLARK COUNTY
WASHINGTON

N:\CIP\PROJECTS\310122-NE72Ave-H99toSTJohns\DESIGN\DWGS\DP1B.dwg, 10/25/2004 3:18:54 PM, kerlinr

PRELIMINARY

NOTES:

1. CONTRACTOR SHALL FIELD VERIFY (POTHOLE) ALL POTENTIAL UTILITY CROSSINGS PRIOR TO CONSTRUCTION. IF DIRECT CONFLICT EXISTS, NOTIFY THE ENGINEER AND UTILITY COMPANY. PROCEED ONLY AS DIRECTED AND PER STANDARD POLICY AND REGULATIONS. (COST INCLUDED IN BID ITEMS FOR STORM SEWER AND CULVERT PIPE).

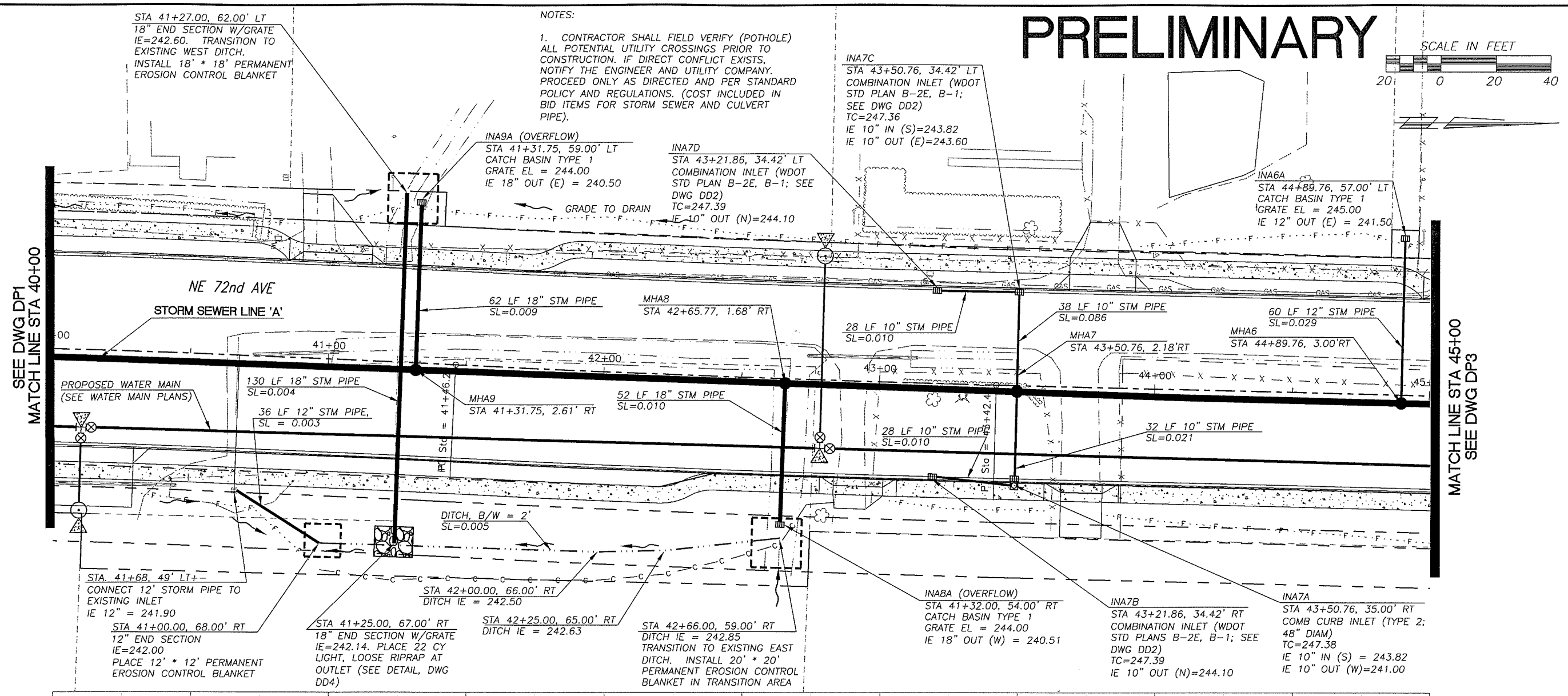

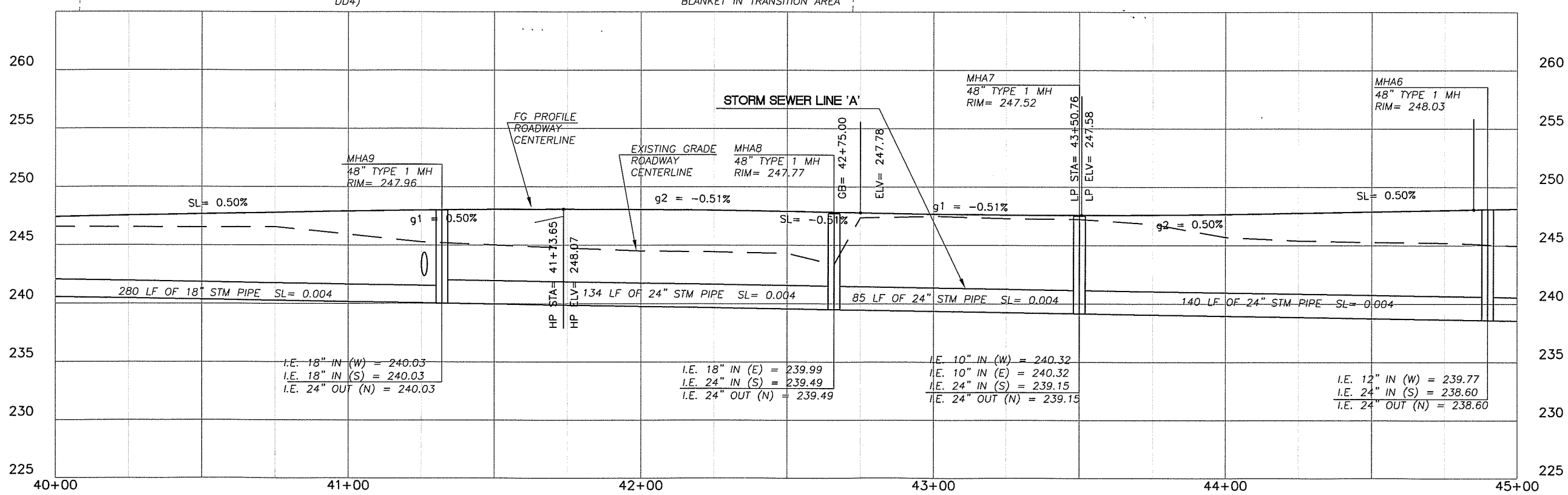

DESIGNED	JM
DRAWN	RRK
CRP	310122
HOR.	1"=20'
VERT.	1"=5'
DATE	10/29/04
DWG:	DP2
SHEET	OF

CALL 48 HOURS BEFORE YOU DIG 1-800-553-4344 "It's the Law" NORTHWEST UTILITIES NOTIFICATION CENTER

MILNE WASHINGTON STATE REGISTERED PROFESSIONAL ENGINEER 31148 EXPIRES: JULY 7, 2005

DESIGN & ENGINEERING DIVISION
DESIGN SECTION

NE 72ND AVENUE
DRAINAGE PLAN (STA 40+00 TO 45+00)

proud past, promising future
CLARK COUNTY WASHINGTON

N:\CIP\PROJECTS\310122-NE72Ave-H99toSTJohns\DESIGN\DWGS\DP2.dwg, 10/25/2004 3:19:41 PM, kerlinr

PRELIMINARY

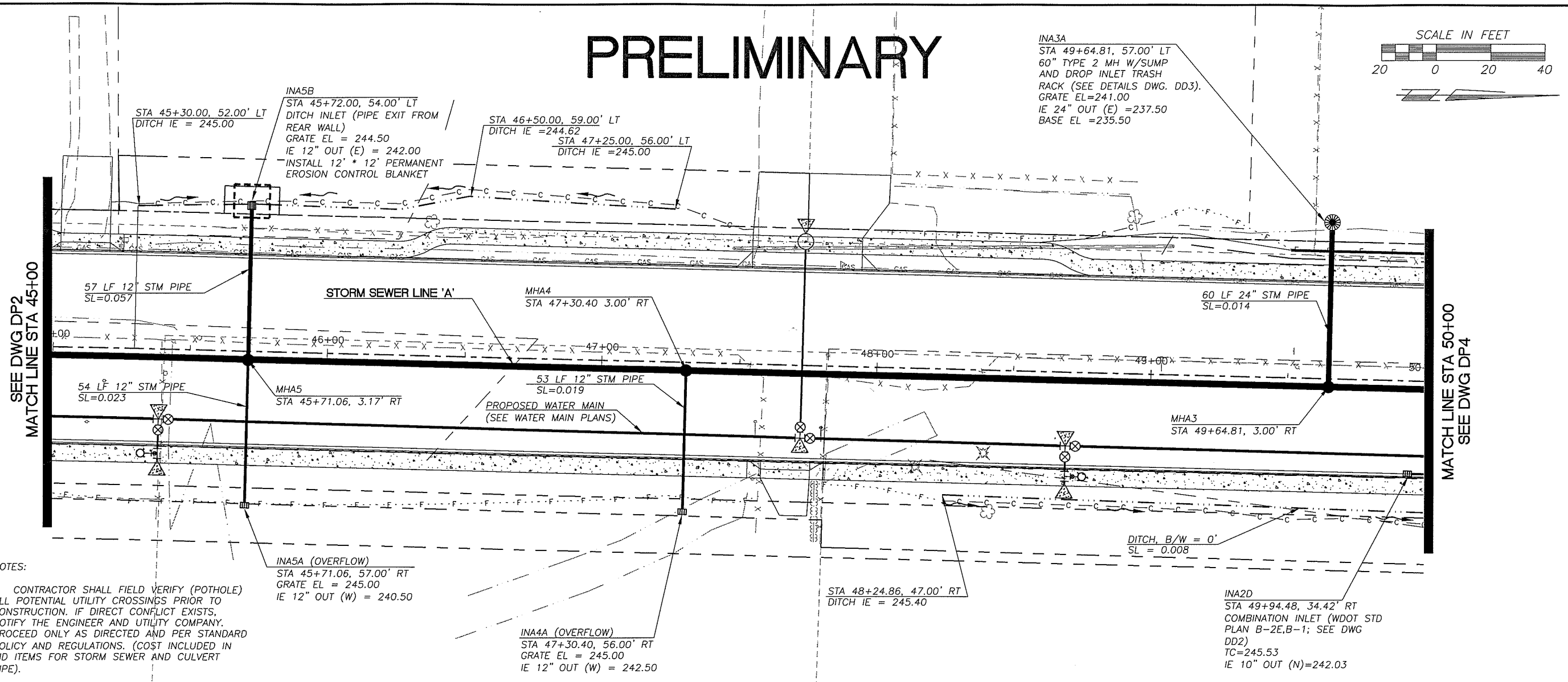

NOTES:

1. CONTRACTOR SHALL FIELD VERIFY (POTHOLE) ALL POTENTIAL UTILITY CROSSINGS PRIOR TO CONSTRUCTION. IF DIRECT CONFLICT EXISTS, NOTIFY THE ENGINEER AND UTILITY COMPANY. PROCEED ONLY AS DIRECTED AND PER STANDARD POLICY AND REGULATIONS. (COST INCLUDED IN BID ITEMS FOR STORM SEWER AND CULVERT PIPE).

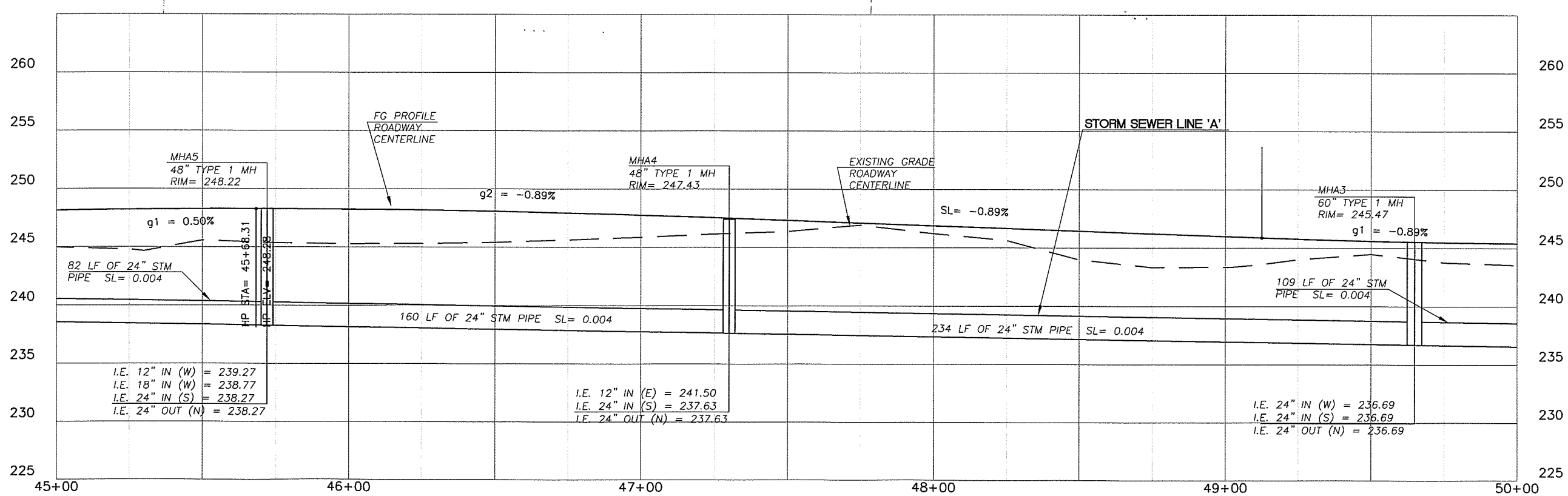

DESIGNED	JM
DRAWN	RRK
CRP	310122
HOR.	1"=20'
VERT.	1"=5'
DATE	10/29/04
DWG:	DP3
SHEET	OF

CALL 48 HOURS BEFORE YOU DIG
1-800-553-4344
"It's the Law"
NORTHWEST UTILITIES NOTIFICATION CENTER

STATE OF WASHINGTON
MILLE
WASHINGTON
31148
REGISTERED PROFESSIONAL ENGINEER
EXPIRES JULY 7, 2005

DESIGN & ENGINEERING DIVISION
DESIGN SECTION

NE 72ND AVENUE
DRAINAGE PLAN (STA 45+00 TO 50+00)

proud past, promising future
CLARK COUNTY
WASHINGTON

N:\CIP\PROJECTS\310122-NE72Ave-H99toSTJohns\DESIGN\DWGS\DP3.dwg, 10/26/2004 7:55:14 AM, kerlinr

NOTES:

1. CONTRACTOR SHALL FIELD VERIFY (POTHOLE) ALL POTENTIAL UTILITY CROSSINGS PRIOR TO CONSTRUCTION. IF DIRECT CONFLICT EXISTS, NOTIFY THE ENGINEER AND UTILITY COMPANY. PROCEED ONLY AS DIRECTED AND PER STANDARD POLICY AND REGULATIONS. (COST INCLUDED IN BID ITEMS FOR STORM SEWER AND CULVERT PIPE).

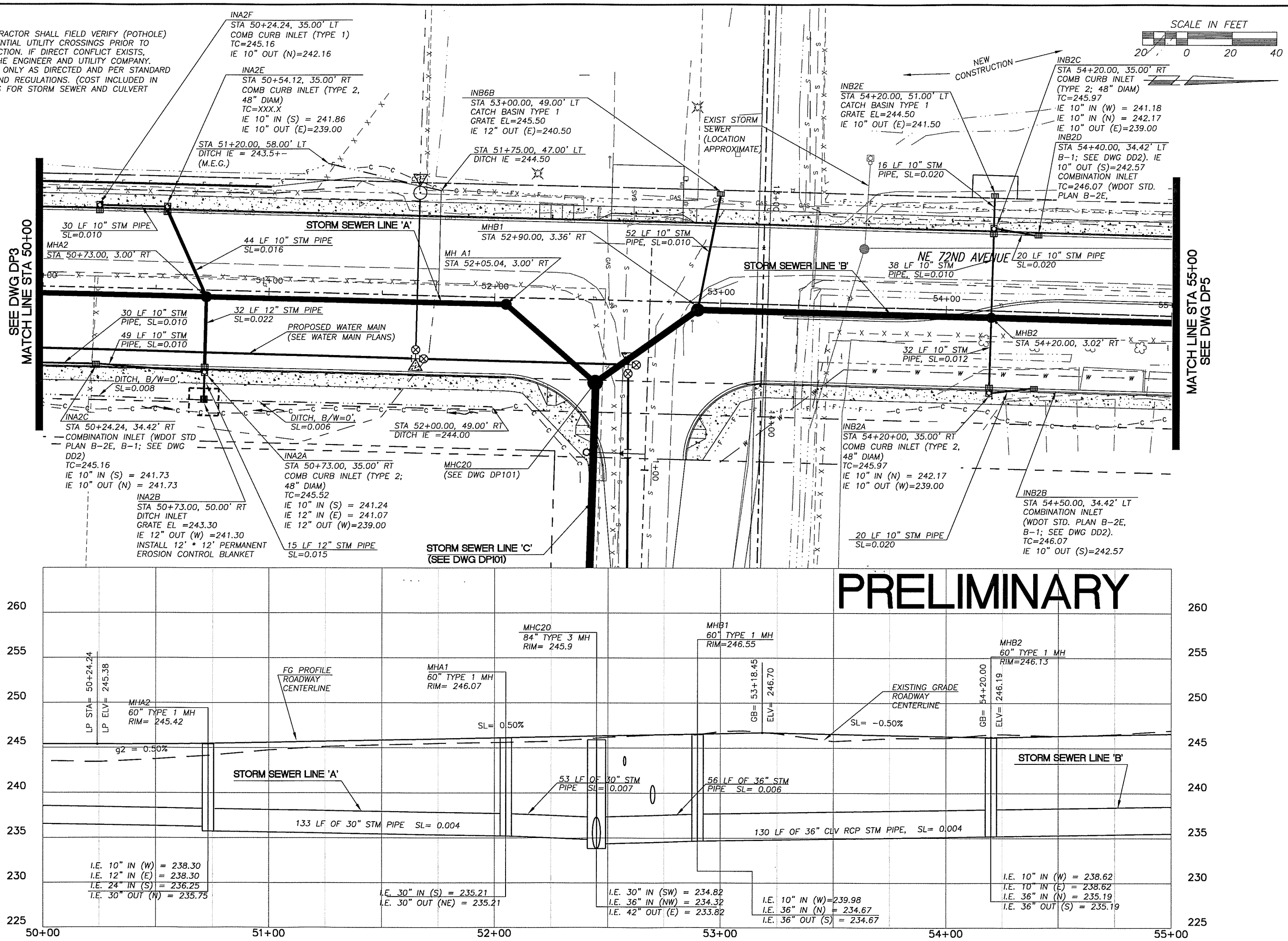

DESIGNED	JM
DRAWN	RRK
CRP	310122
HOR.	1"=20'
VERT.	1"=5'
DATE	10/29/04
DWG:	DP4
SHEET	OF

CALL 48 HOURS BEFORE YOU DIG 1-800-553-4344 "It's the Law" NORTHWEST UTILITIES NOTIFICATION CENTER

MILLIE WASHINGTON STATE REGISTERED PROFESSIONAL ENGINEER 31148 EXPIRES: JULY 7, 2005

DESIGN & ENGINEERING DIVISION
DESIGN SECTION

NE 72ND AVENUE
DRAINAGE PLAN (STA 50+00 TO 55+00)

proud past, promising future
CLARK COUNTY WASHINGTON

N:\CIP\PROJECTS\310122-NE72Ave-H99toSTJohns\DESIGN\DWGS\DP4.dwg, 10/26/2004 7:47:01 AM, kerlinr

NOTE: APPROVAL REQUIRED FROM CLARK COUNTY DEVELOPMENT ENGINEERING DIVISION PRIOR TO REMOVAL OF TEMPORARY PIPE RESTRICTIONS AND ANY NEW CONNECTIONS TO STORM SEWERS

SCALE IN FEET
20 0 20 40

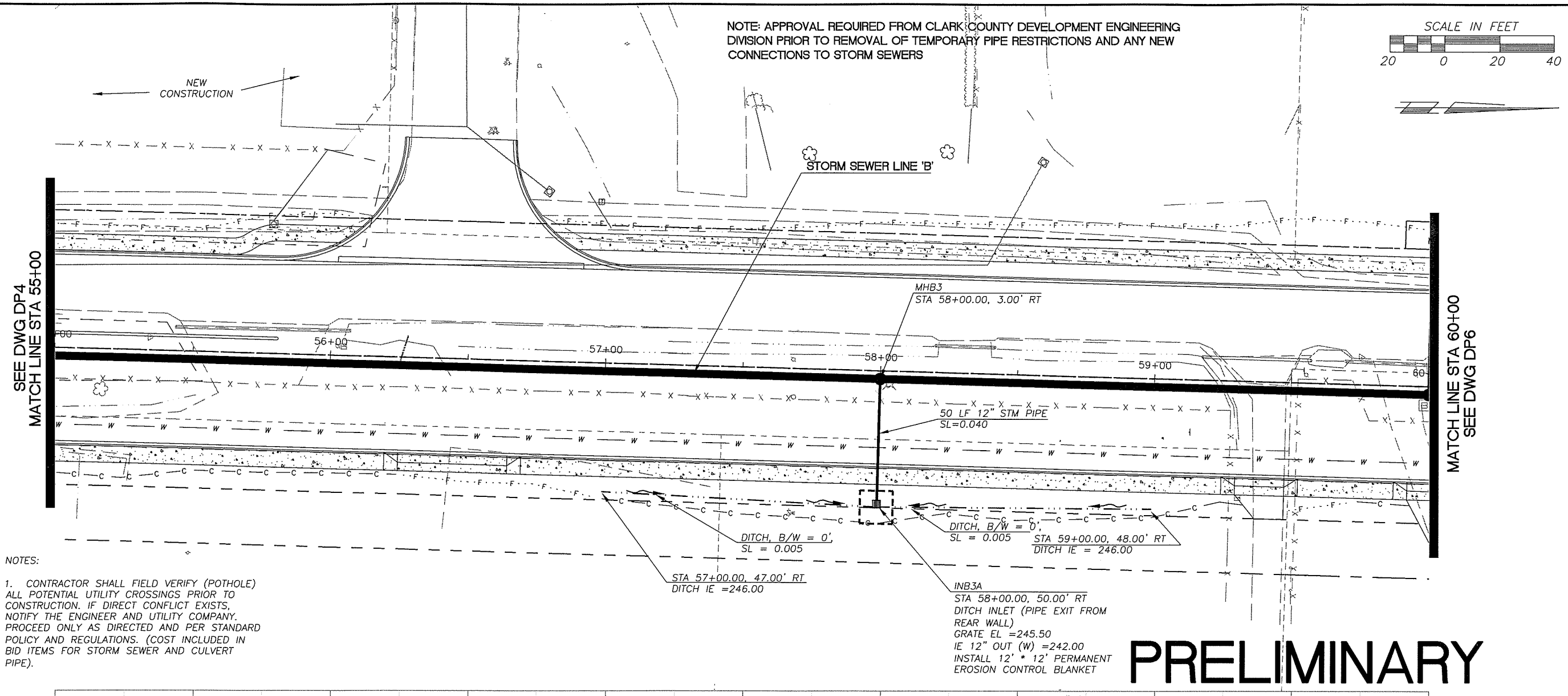

NOTES:

1. CONTRACTOR SHALL FIELD VERIFY (POTHOLE) ALL POTENTIAL UTILITY CROSSINGS PRIOR TO CONSTRUCTION. IF DIRECT CONFLICT EXISTS, NOTIFY THE ENGINEER AND UTILITY COMPANY. PROCEED ONLY AS DIRECTED AND PER STANDARD POLICY AND REGULATIONS. (COST INCLUDED IN BID ITEMS FOR STORM SEWER AND CULVERT PIPE).

PRELIMINARY

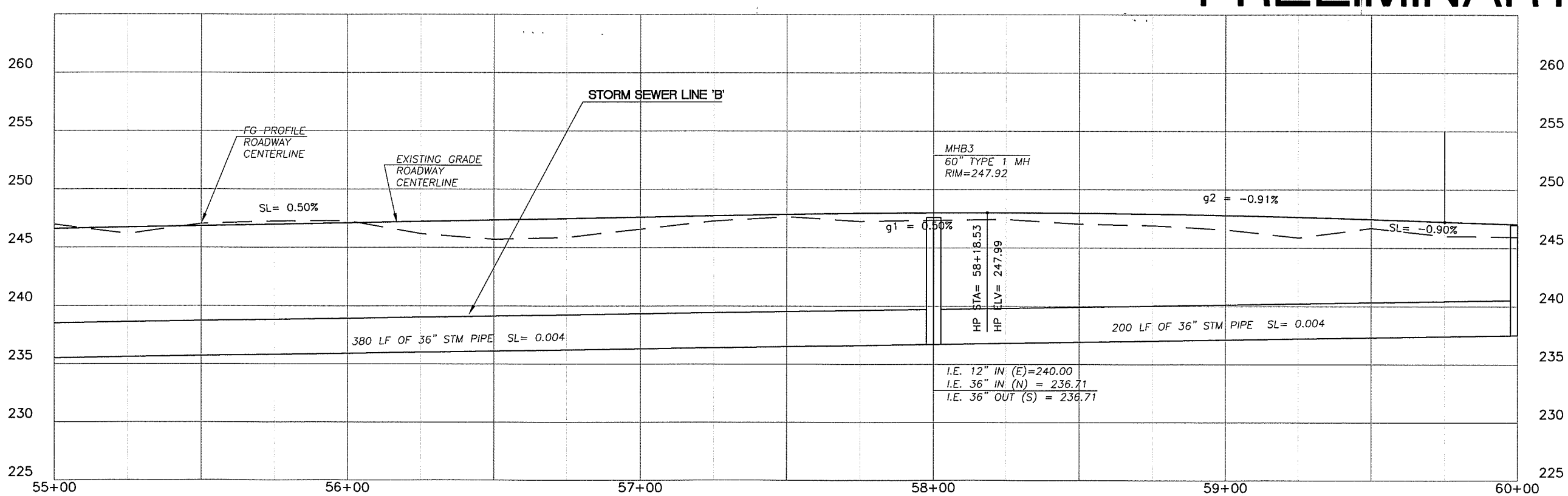

DESIGNED	JM
DRAWN	RRK
CRP	310122
HOR.	1"=20'
VERT.	1"=5'
DATE	10/29/04
DWG:	DP5
SHEET	OF

CALL 48 HOURS BEFORE YOU DIG
1-800-553-4344
It's the Law
NORTHWEST UTILITIES NOTIFICATION CENTER

STATE OF WASHINGTON
JULIE WASHINGTON
31148
REGISTERED PROFESSIONAL ENGINEER
EXPIRES: JULY 7, 2005

DESIGN & ENGINEERING DIVISION
DESIGN SECTION

NE 72ND AVENUE
DRAINAGE PLAN (STA 55+00 TO 60+00)

proud past, promising future
CLARK COUNTY
WASHINGTON

N:\CIP\PROJECTS\310122-NE72Ave-H99toSTJohns\DESIGN\DWGS\DP5.dwg, 10/25/2004 3:22:30 PM, kerlinr

NOTES:

1. CONTRACTOR SHALL FIELD VERIFY (POTHOLE) ALL POTENTIAL UTILITY CROSSINGS PRIOR TO CONSTRUCTION. IF DIRECT CONFLICT EXISTS, NOTIFY THE ENGINEER AND UTILITY COMPANY. PROCEED ONLY AS DIRECTED AND PER STANDARD POLICY AND REGULATIONS. (COST INCLUDED IN BID ITEMS FOR STORM SEWER AND CULVERT PIPE).

NOTE: APPROVAL REQUIRED FROM CLARK COUNTY DEVELOPMENT ENGINEERING DIVISION PRIOR TO REMOVAL OF TEMPORARY PIPE RESTRICTIONS AND ANY NEW CONNECTIONS TO STORM SEWERS

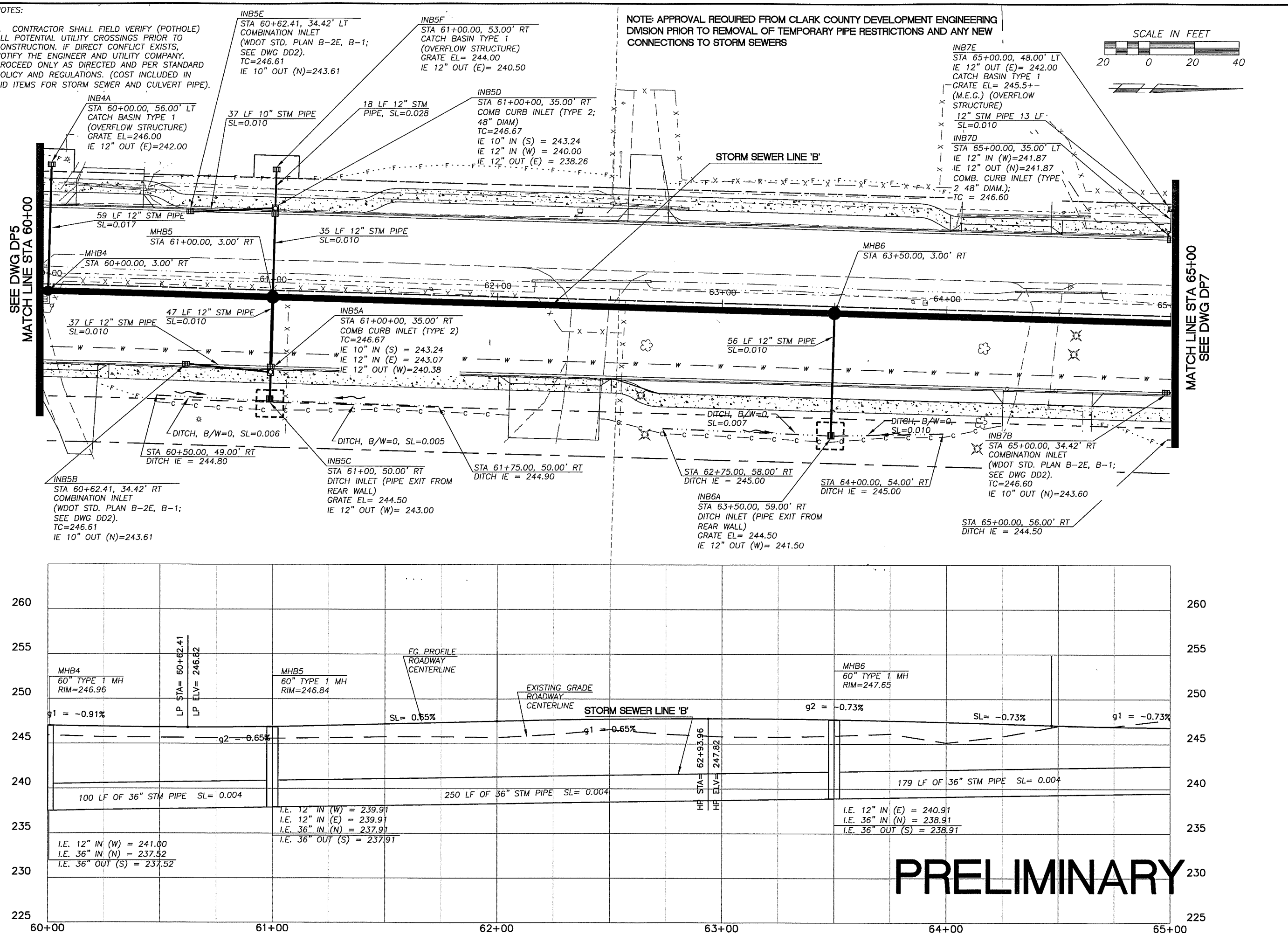

DESIGNED	JM
DRAWN	RRK
CRP	310122
HOR.	1"=20'
VERT.	1"=5'
DATE	10/29/04
DWG:	DP6
SHEET	OF

CALL 48 HOURS BEFORE YOU DIG 1-800-553-4344 "It's the Law" NORTHWEST UTILITIES NOTIFICATION CENTER

EXPIRES: JULY 2, 2003

DESIGN & ENGINEERING DIVISION
DESIGN SECTION

NE 72ND AVENUE
DRAINAGE PLAN (STA 60+00 TO 65+00)

proud past, promising future

CLARK COUNTY WASHINGTON

N:\CIP\PROJECTS\310122-NE72Ave-H99toSTJohns\DESIGN\DWGS\DP6.dwg, 10/26/2004 8:16:45 AM, kerlinr

NOTE: APPROVAL REQUIRED FROM CLARK COUNTY DEVELOPMENT ENGINEERING DIVISION PRIOR TO REMOVAL OF TEMPORARY PIPE RESTRICTIONS AND ANY NEW CONNECTIONS TO STORM SEWERS

NOTES:

1. CONTRACTOR SHALL FIELD VERIFY (POTHOLE) ALL POTENTIAL UTILITY CROSSINGS PRIOR TO CONSTRUCTION. IF DIRECT CONFLICT EXISTS, NOTIFY THE ENGINEER AND UTILITY COMPANY. PROCEED ONLY AS DIRECTED AND PER STANDARD POLICY AND REGULATIONS. (COST INCLUDED IN BID ITEMS FOR STORM SEWER AND CULVERT PIPE).

SCALE IN FEET
20 0 20 40

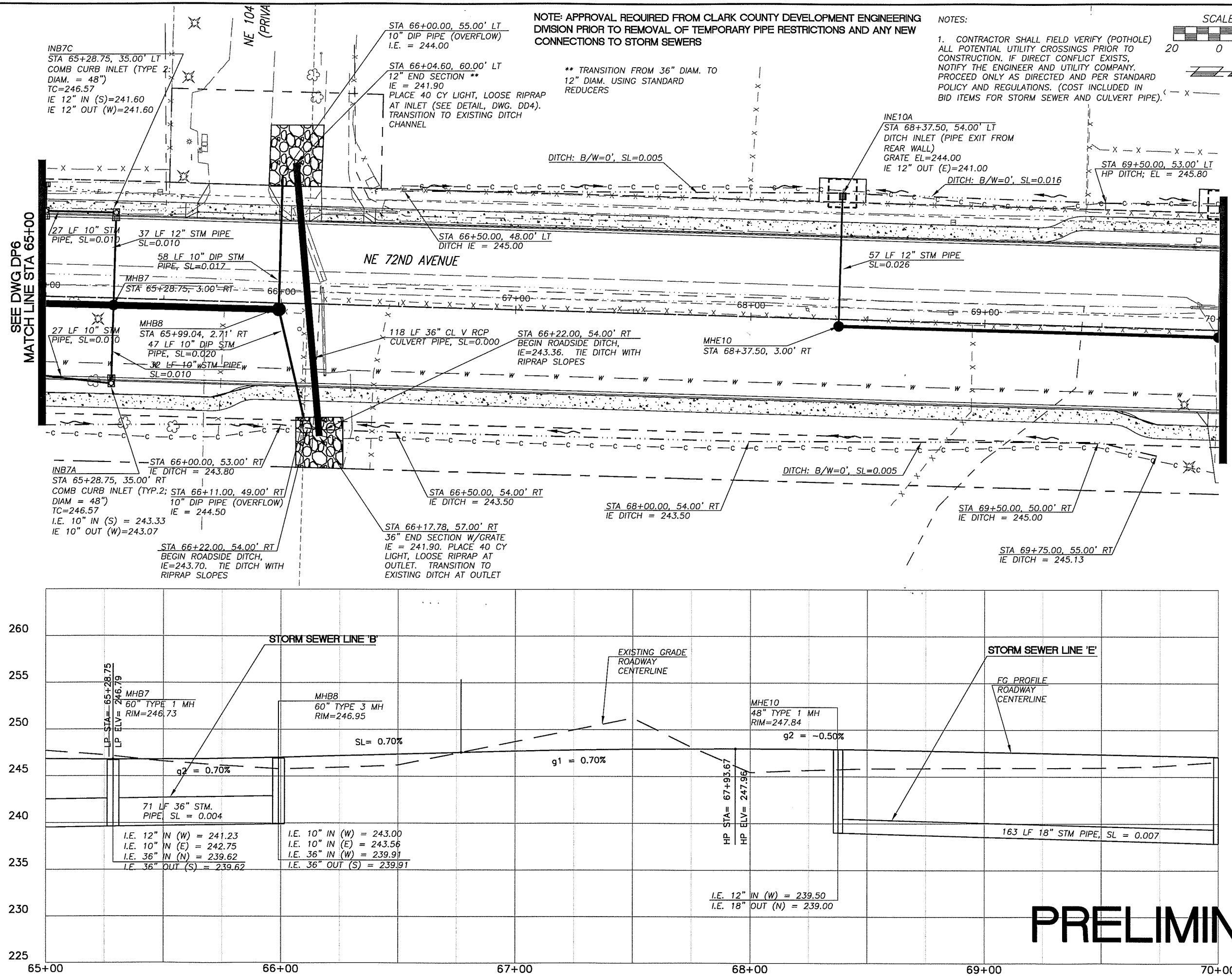

PRELIMINARY

DESIGNED	JM
DRAWN	RRK
CRP	310122
HOR.	1"=20'
VERT.	1"=5'
DATE	10/29/04
DWG:	DP7
SHEET	OF

CALL 48 HOURS BEFORE YOU DIG 1-800-553-4344 "It's the Law" NORTHWEST UTILITIES NOTIFICATION CENTER

STATE OF WASHINGTON RICHARD MALLIE 31148 REGISTERED PROFESSIONAL ENGINEER EXPIRES JULY 7, 2003

DESIGN & ENGINEERING DIVISION
DESIGN SECTION

NE 72ND AVENUE
DRAINAGE PLAN (STA 65+00 TO 70+00)

proud past, promising future
CLARK COUNTY WASHINGTON

N:\CIP\PROJECTS\310122-NE72Ave-H99toSTJohns\DESIGN\DWGS\DP7.dwg, 10/26/2004 8:30:13 AM, kerlinr

NOTE: APPROVAL REQUIRED FROM CLARK COUNTY DEVELOPMENT ENGINEERING DIVISION PRIOR TO REMOVAL OF TEMPORARY PIPE RESTRICTIONS AND ANY NEW CONNECTIONS TO STORM SEWERS

NOTES:

1. CONTRACTOR SHALL FIELD VERIFY (POTHOLE) ALL POTENTIAL UTILITY CROSSINGS PRIOR TO CONSTRUCTION. IF DIRECT CONFLICT EXISTS, NOTIFY THE ENGINEER AND UTILITY COMPANY. PROCEED ONLY AS DIRECTED AND PER STANDARD POLICY AND REGULATIONS. (COST INCLUDED IN BID ITEMS FOR STORM SEWER AND CULVERT PIPE).

SCALE IN FEET

20 0 20 40

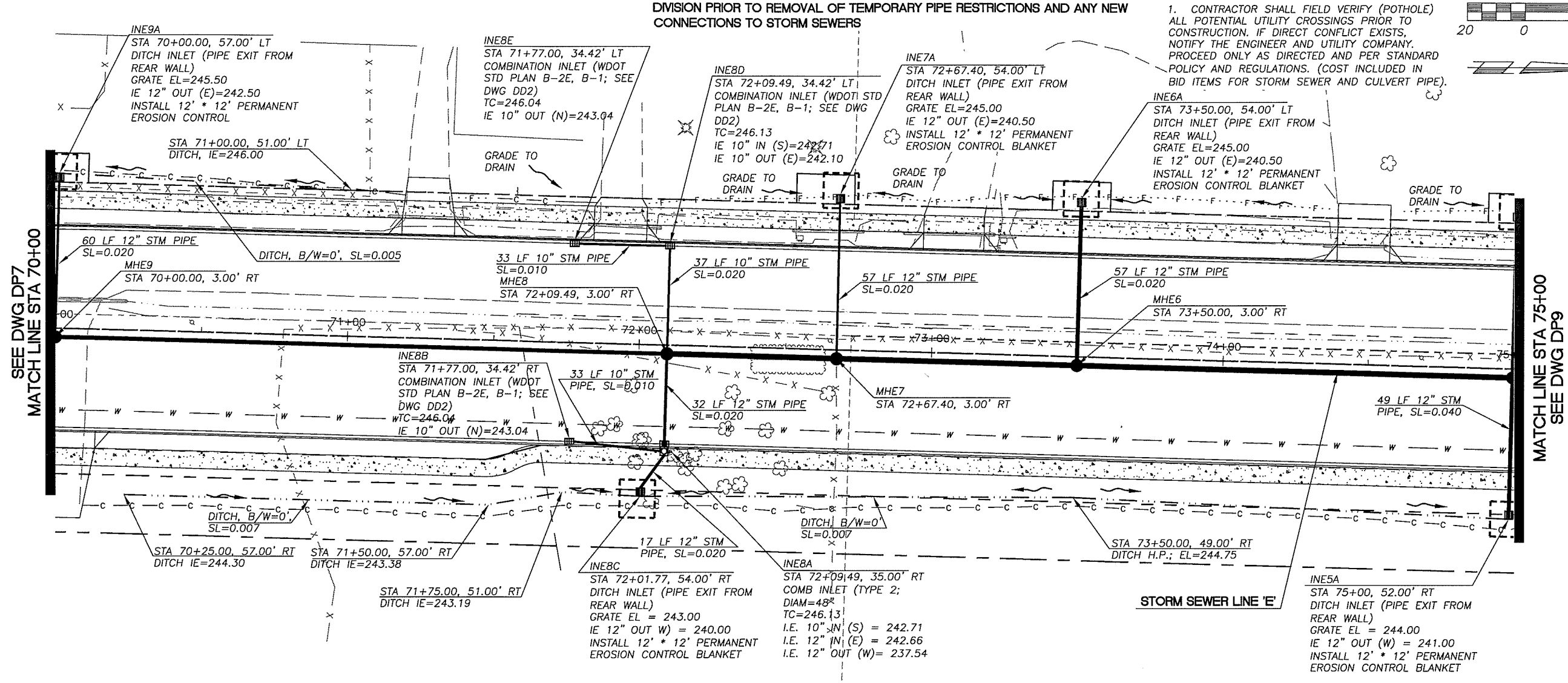

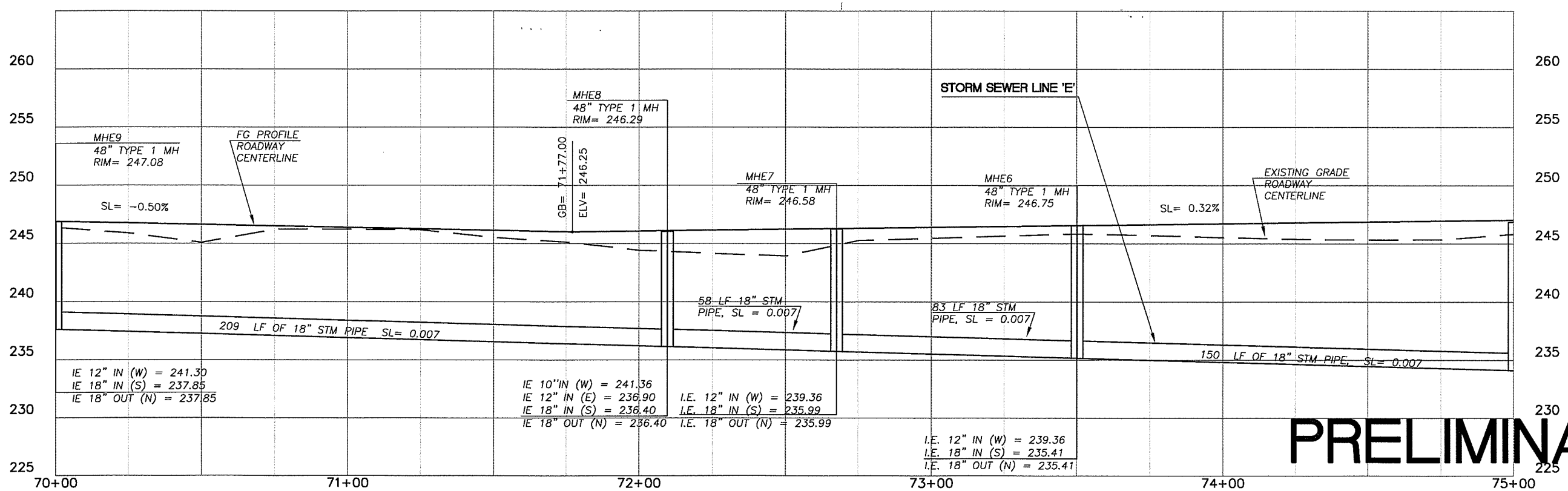

PRELIMINARY

DESIGNED	JM
DRAWN	RRK
CRP	310122
HOR.	1"=20'
VERT.	1"=5'
DATE	10/29/04
DWG:	DPB
SHEET	OF

CALL 48 HOURS BEFORE YOU DIG 1-800-553-4344 "It's the Law" NORTHWEST UTILITIES NOTIFICATION CENTER

STATE OF WASHINGTON JOHN MILLER BERNTSEN 31149 REGISTERED PROFESSIONAL ENGINEER EXPIRES: JULY 7, 2003

DESIGN & ENGINEERING DIVISION
DESIGN SECTION

NE 72ND AVENUE
DRAINAGE PLAN (STA 70+00 TO 75+00)

proud past, promising future
CLARK COUNTY WASHINGTON

N:\CIP\PROJECTS\310122-NE72Ave-H99toSTJohns\DESIGN\DWGS\DP8.dwg, 10/26/2004 8:39:34 AM, kerlintr

NOTE: APPROVAL REQUIRED FROM CLARK COUNTY DEVELOPMENT ENGINEERING DIVISION PRIOR TO REMOVAL OF TEMPORARY PIPE RESTRICTIONS AND ANY NEW CONNECTIONS TO STORM SEWERS

SCALE IN FEET
20 0 20 40

INE5B
STA 75+00.00, 55.00' LT
DITCH INLET (PIPE EXIT FROM REAR WALL)
GRATE EL. = 245.50
IE 12" OUT (S) = 242.50
INSTALL 12' * 12' PERMANENT EROSION CONTROL BLANKET

STA 76+00.00, 53.00' LT
DITCH HP, EL=246.20

INE4A
STA 76+50.00, 55.00' LT
DITCH INLET (PIPE EXIT FROM REAR WALL)
GRATE EL. = 245.50
IE 12" OUT (E) = 242.50
INSTALL 12' * 12' PERMANENT EROSION CONTROL BLANKET

STA 77+50, 54' LT
BEGIN DITCH
IE = 245.00

INE2B
STA 25+75.00, 19.00' RT
DITCH INLET (PIPE EXIT FROM REAR WALL)
GRATE EL. = 242.40
IE 18" OUT (N)=238.33

36 LF 18" CL IV
RCP PIPE, SL=0.010

INE2A
STA 25+75.00, 16.50' LT
DITCH INLET (PIPE EXIT FROM SIDE WALL)
GRATE EL. = 242.10
IE 18" IN (S) = 237.98
IE 18" OUT (E) =237.98

STA 25+75 (NE 109TH), 19' RT, END DITCH,
IE = 242.40
DITCH, B/W=0', SL=0.034

STA 78+96, 68' LT
DITCH IE = 243.50

STA 78+85, 55' LT
DITCH IE = 244.00

DITCH, B/W=0'
SL=0.028

DITCH, B/W=0', SL=0.007

DITCH, B/W=0'
SL=0.014

GRADE TO DRAIN

DITCH, B/W=0', SL=0.007

STA. 79+72.00, 67.00' LT
IE DITCH = 243.17

STA. 79+84.00, 55.00' LT
IE DITCH = 243.33

58 LF 18" STM PIPE
SL=0.060

58 LF 18" STM PIPE
SL=0.060

INE3B
STA 78+74.20, 34.42' LT
COMBINATION INLET (WDOT STD PLAN B-2E,B-1; SEE DWG DD2)
TC=246.01
IE 10" OUT (NE)=243.01

47 LF 10" STM PIPE
SL=0.050

EOP Sta = 26+46.82

100 LF 18" CL IV
RCP PIPE, SL=0.020

MHE2
STA 79+48.87,
3.00' RT

NE 72ND AVENUE

NE 109TH ST

26+00

SEE DWG DP8
MATCH LINE STA 75+00

MATCH LINE STA 80+00
SEE DWG DP10

MHE5
STA 75+00.00, 3.00' RT

MHE4,
STA 76+50.00, 3.00' RT

MHE3
STA 79+00.00, 3.00' RT

58 LF 18" STM PIPE
SL=0.020

STA 76+25, 54.5' RT
BEGIN DITCH; EL=245.38

DITCH, B/W=0', SL=0.013

INE3A
STA 79+00, 61.00' RT
DITCH INLET (PIPE EXIT FROM REAR WALL)
GRATE EL = 241.80
IE 18" OUT (W) = 238.80
INSTALL 12' * 12' PERMANENT EROSION CONTROL BLANKET

STORM SEWER LINE 'E'

NOTES:

1. CONTRACTOR SHALL FIELD VERIFY (POTHOLE) ALL POTENTIAL UTILITY CROSSINGS PRIOR TO CONSTRUCTION. IF DIRECT CONFLICT EXISTS, NOTIFY THE ENGINEER AND UTILITY COMPANY. PROCEED ONLY AS DIRECTED AND PER STANDARD POLICY AND REGULATIONS. (COST INCLUDED IN BID ITEMS FOR STORM SEWER AND CULVERT PIPE).

PRELIMINARY

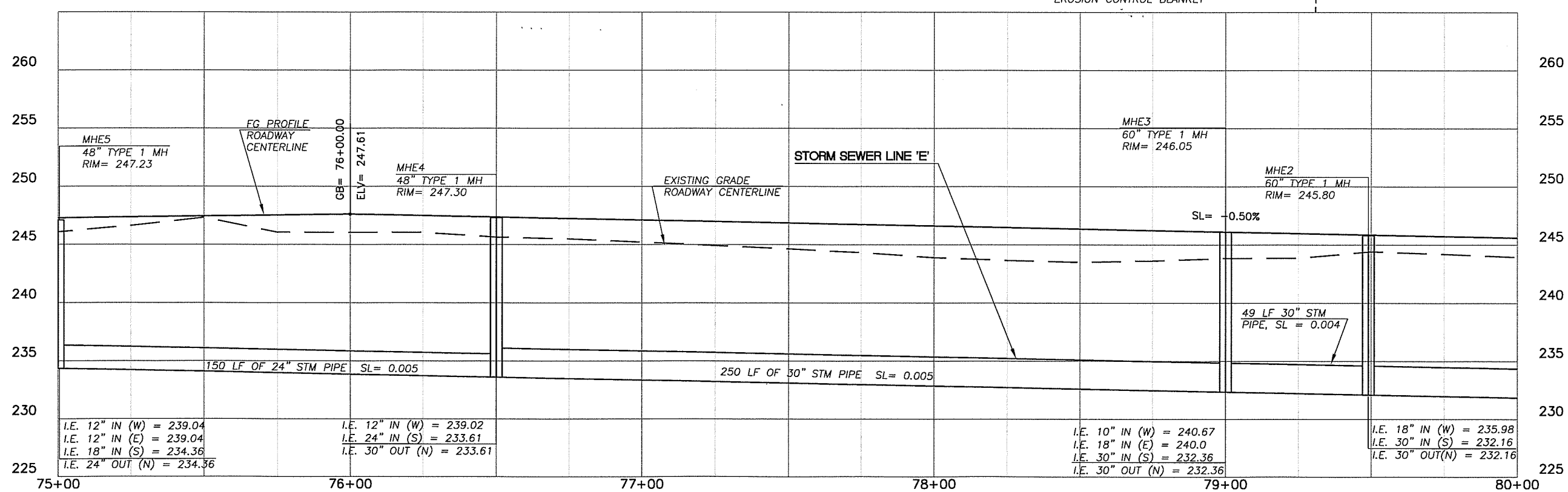

DESIGNED JM
DRAWN RRK
CRP 310122
HOR. 1"=20'
VERT. 1"=5'
DATE 10/29/04
DWG: DP9
SHEET OF

CALL 48 HOURS BEFORE YOU DIG
1-800-553-4344
"It's the Law"
NORTHWEST UTILITIES NOTIFICATION CENTER

MILLINE, STATE OF WASHINGTON, 31148, REGISTERED PROFESSIONAL ENGINEER
EXPIRES: JULY 7, 2005

DESIGN & ENGINEERING DIVISION
DESIGN SECTION

NE 72ND AVENUE
DRAINAGE PLAN (STA 75+00 TO 80+00)

proud past, promising future
CLARK COUNTY WASHINGTON

N:\CIP\PROJECTS\310122-NE72Ave-H99toSTJohns\DESIGN\DWGS\DP9.dwg, 10/26/2004 8:45:18 AM, kerlinr

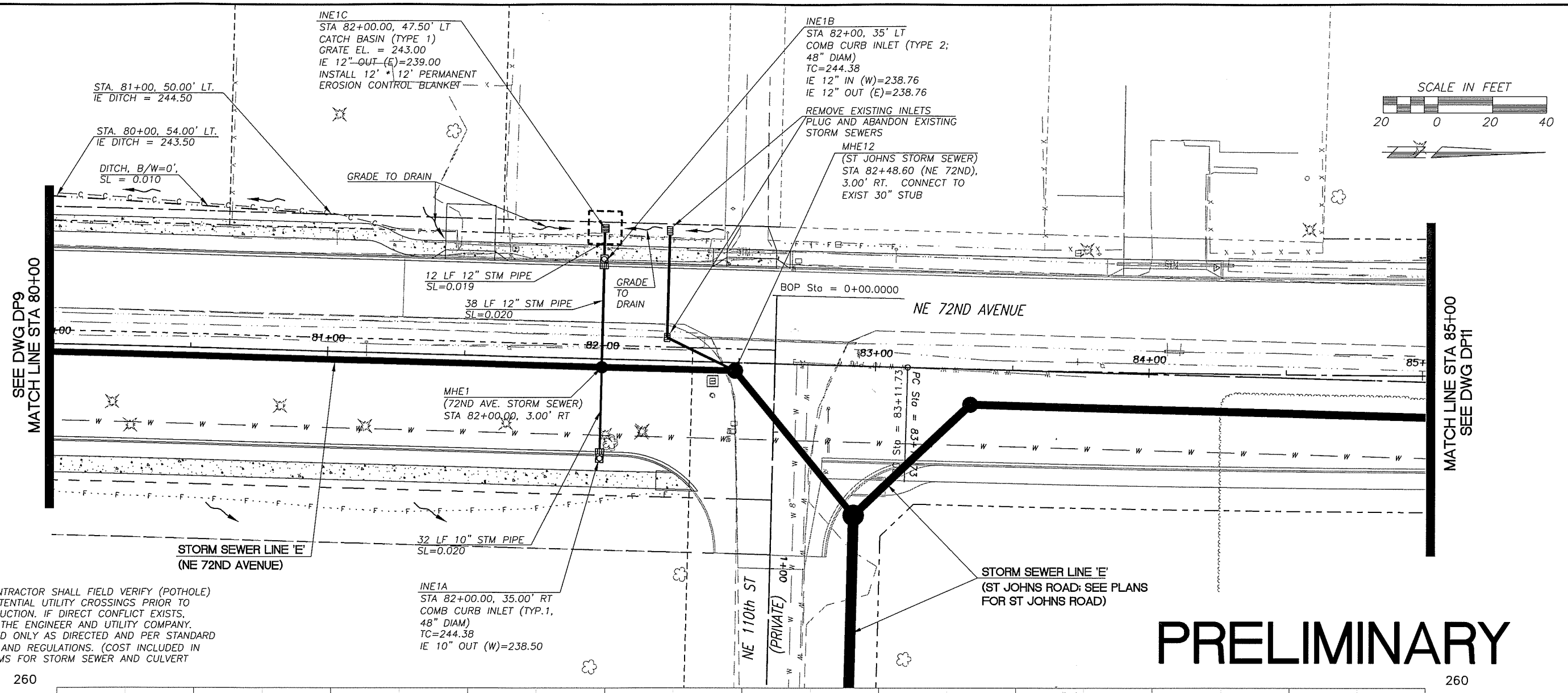

NOTES:

1. CONTRACTOR SHALL FIELD VERIFY (POTHOLE) ALL POTENTIAL UTILITY CROSSINGS PRIOR TO CONSTRUCTION. IF DIRECT CONFLICT EXISTS, NOTIFY THE ENGINEER AND UTILITY COMPANY. PROCEED ONLY AS DIRECTED AND PER STANDARD POLICY AND REGULATIONS. (COST INCLUDED IN BID ITEMS FOR STORM SEWER AND CULVERT PIPE).

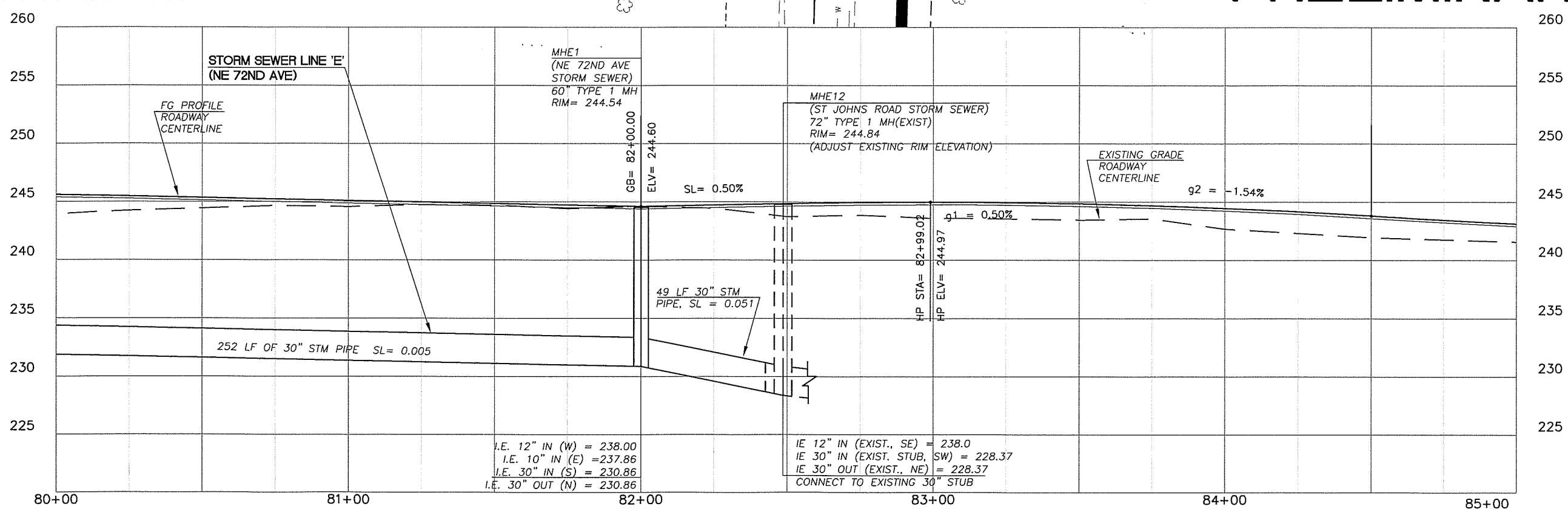

DESIGNED	JM
DRAWN	RRK
CRP	310122
HOR.	1"=20'
VERT.	1"=5'
DATE	10/29/04
DWG:	DP10
SHEET	OF

CALL 48 HOURS BEFORE YOU DIG
1-800-553-4344
"It's the Law"
NORTHWEST UTILITIES NOTIFICATION CENTER

STATE OF WASHINGTON
JOHN MILLER
21148
REGISTERED PROFESSIONAL ENGINEER
EXPIRES: JULY 2, 2005

DESIGN & ENGINEERING DIVISION
DESIGN SECTION

NE 72ND AVENUE
DRAINAGE PLAN (STA 80+00 TO 85+00)

proud past, promising future
CLARK COUNTY
WASHINGTON

N:\CIP\PROJECTS\310122-NE72Ave-H99toSTJohns\DESIGN\DWGS\DP10.dwg, 10/25/2004 3:34:41 PM, kerlinr

NOTES:

1. CONTRACTOR SHALL FIELD VERIFY (POTHOLE) ALL POTENTIAL UTILITY CROSSINGS PRIOR TO CONSTRUCTION. IF DIRECT CONFLICT EXISTS, NOTIFY THE ENGINEER AND UTILITY COMPANY. PROCEED ONLY AS DIRECTED AND PER STANDARD POLICY AND REGULATIONS. (COST INCLUDED IN BID ITEMS FOR STORM SEWER AND CULVERT PIPE).

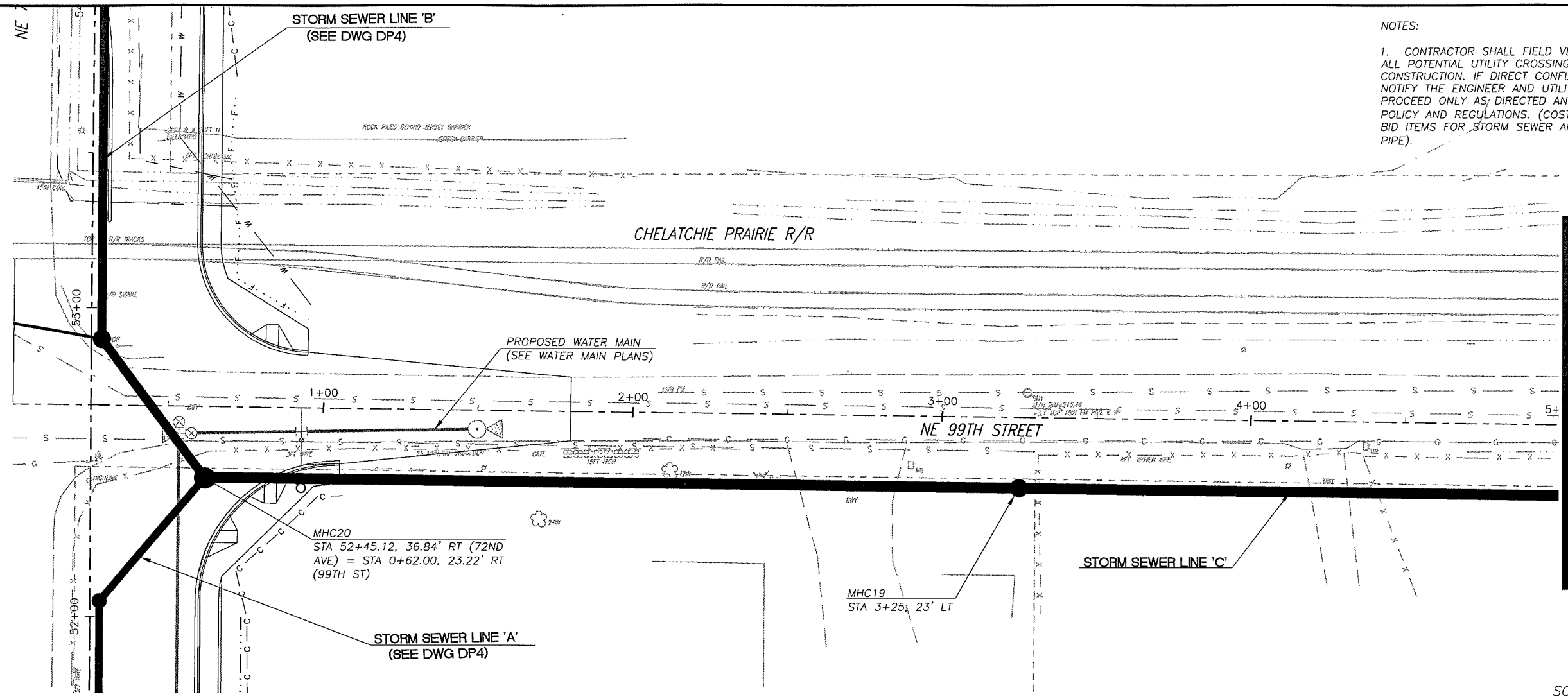

PRELIMINARY

SCALE IN FEET
20 0 20 40

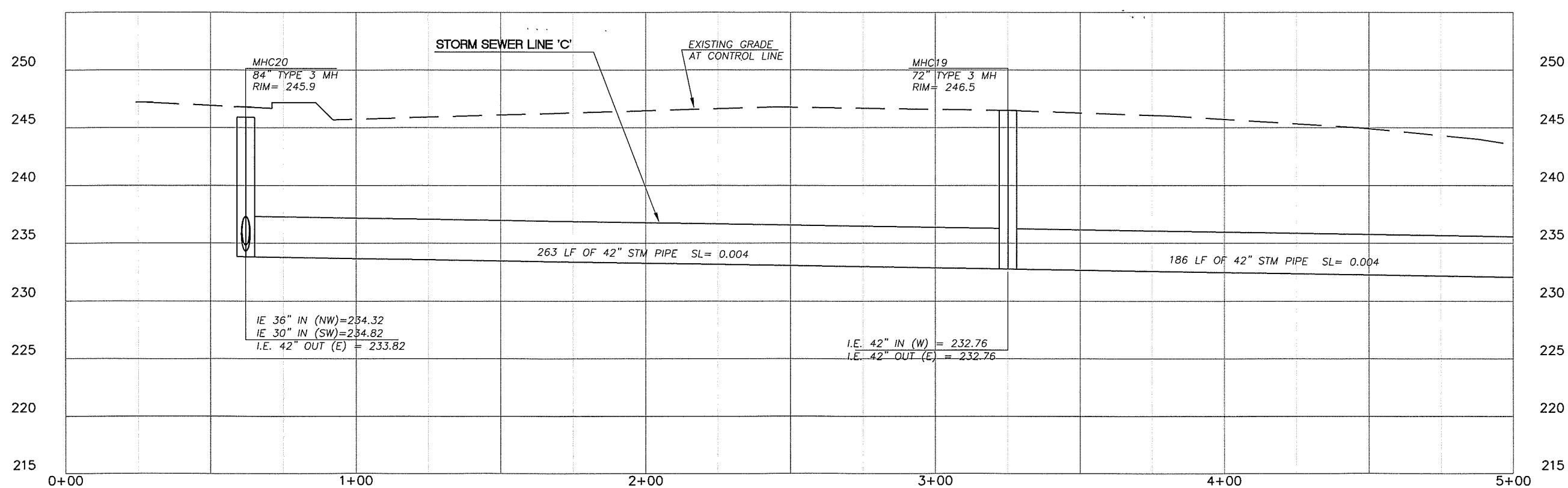

DESIGNED	JM
DRAWN	RRK
CRP	310122
HOR.	1"=20'
VERT.	1"=5'
DATE	10/29/04
DWG:	DP101
SHEET	OF

CALL 48 HOURS BEFORE YOU DIG 1-800-553-4344 "It's the Law" NORTHWEST UTILITIES NOTIFICATION CENTER

STATE OF WASHINGTON MILTON R. SIGLER JR. 17148 PROFESSIONAL ENGINEER EXPIRES: JULY 7, 2005

DESIGN & ENGINEERING DIVISION
DESIGN SECTION

NE 99TH STREET STORM SEWER
DRAINAGE PLAN (STA 0+00 TO 5+00)

proud past, promising future
CLARK COUNTY WASHINGTON

N:\CIPPROJECTS\310122-NE72Ave-H99toSTJohns\DESIGN\DWGS\DP101.dwg, 10/25/2004 3:37:00 PM, kerlinr

NOTES:

1. CONTRACTOR SHALL FIELD VERIFY (POTHOLE) ALL POTENTIAL UTILITY CROSSINGS PRIOR TO CONSTRUCTION. IF DIRECT CONFLICT EXISTS, NOTIFY THE ENGINEER AND UTILITY COMPANY. PROCEED ONLY AS DIRECTED AND PER STANDARD POLICY AND REGULATIONS. (COST INCLUDED IN BID ITEMS FOR STORM SEWER AND CULVERT PIPE).

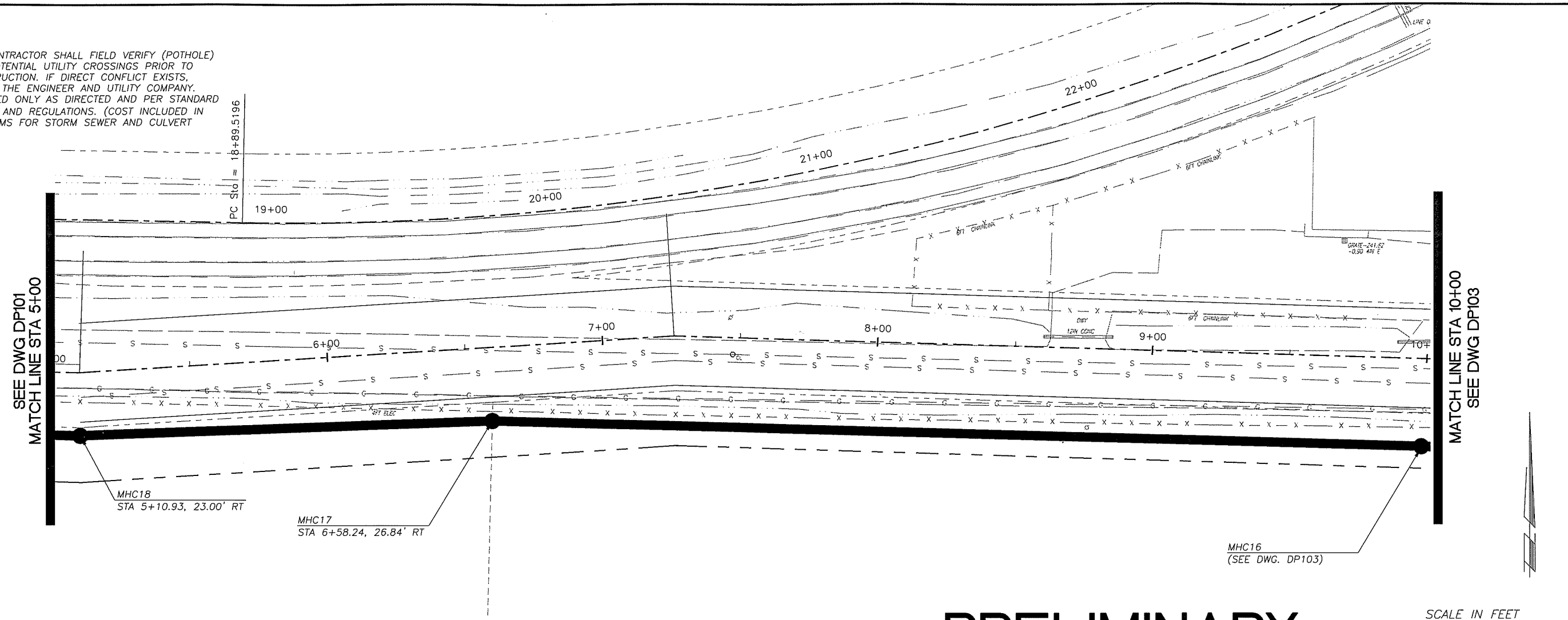

PRELIMINARY

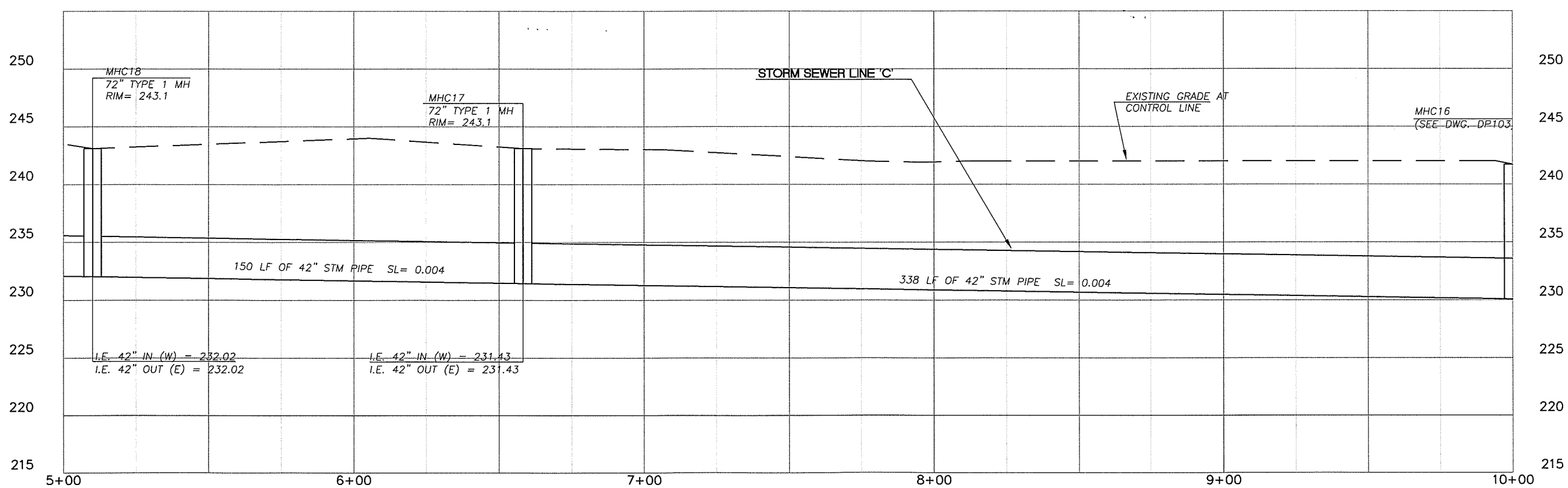

DESIGNED	JM
DRAWN	RRK
CRP	310122
HOR.	1"=20'
VERT.	1"=5'
DATE	10/29/04
DWG:	DP102
SHEET	OF

CALL 48 HOURS BEFORE YOU DIG
1-800-553-4344
"It's the Law"
NORTHWEST UTILITIES NOTIFICATION CENTER

STATE OF WASHINGTON
JOHN WILLIAM CROCKETT
31149
REGISTERED PROFESSIONAL ENGINEER
EXPIRES JULY 7, 2005

DESIGN & ENGINEERING DIVISION
DESIGN SECTION

NE 99TH STREET STORM SEWER
DRAINAGE PLAN (STA 5+00 TO 10+00)

proud past, promising future
CLARK COUNTY
WASHINGTON

N:\CIP\PROJECTS\310122-NE72Ave-H99toSTJohns\DESIGN\DWGS\DP102.dwg, 10/25/2004 3:37:40 PM, kerlinr

NOTES:

1. CONTRACTOR SHALL FIELD VERIFY (POTHOLE) ALL POTENTIAL UTILITY CROSSINGS PRIOR TO CONSTRUCTION. IF DIRECT CONFLICT EXISTS, NOTIFY THE ENGINEER AND UTILITY COMPANY. PROCEED ONLY AS DIRECTED AND PER STANDARD POLICY AND REGULATIONS. (COST INCLUDED IN BID ITEMS FOR STORM SEWER AND CULVERT PIPE).

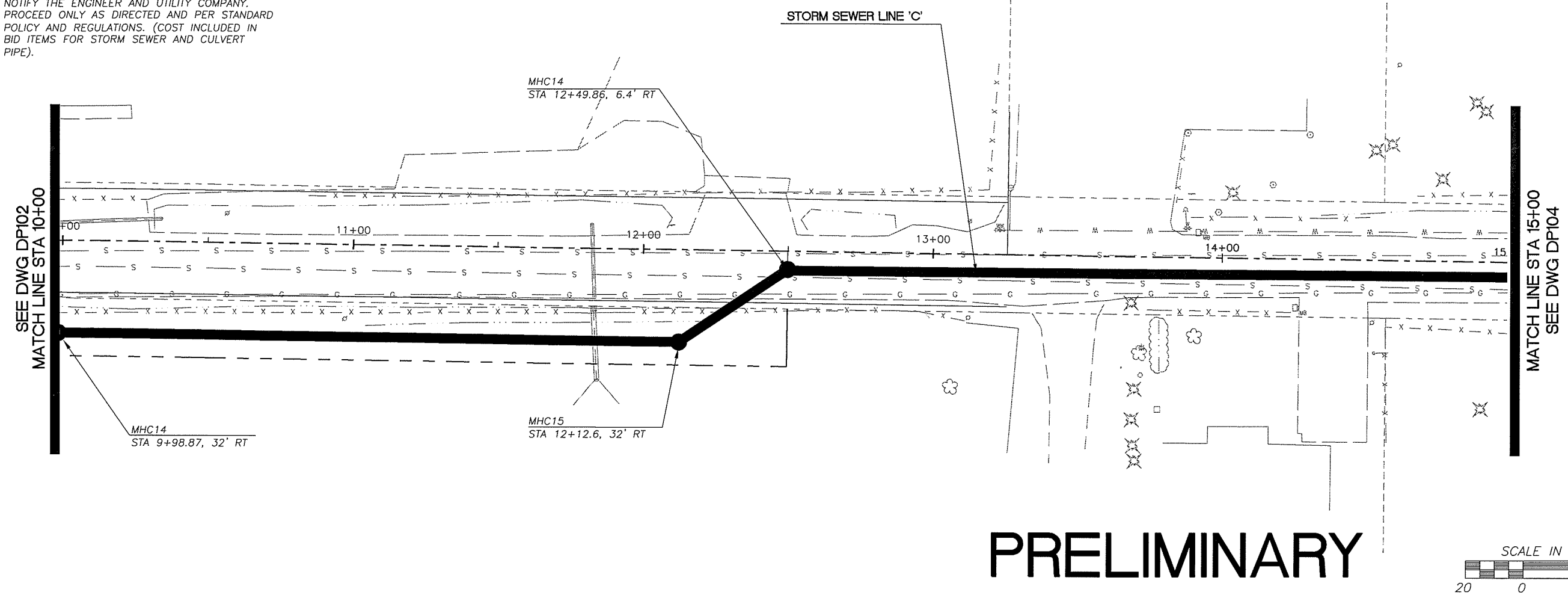

PRELIMINARY

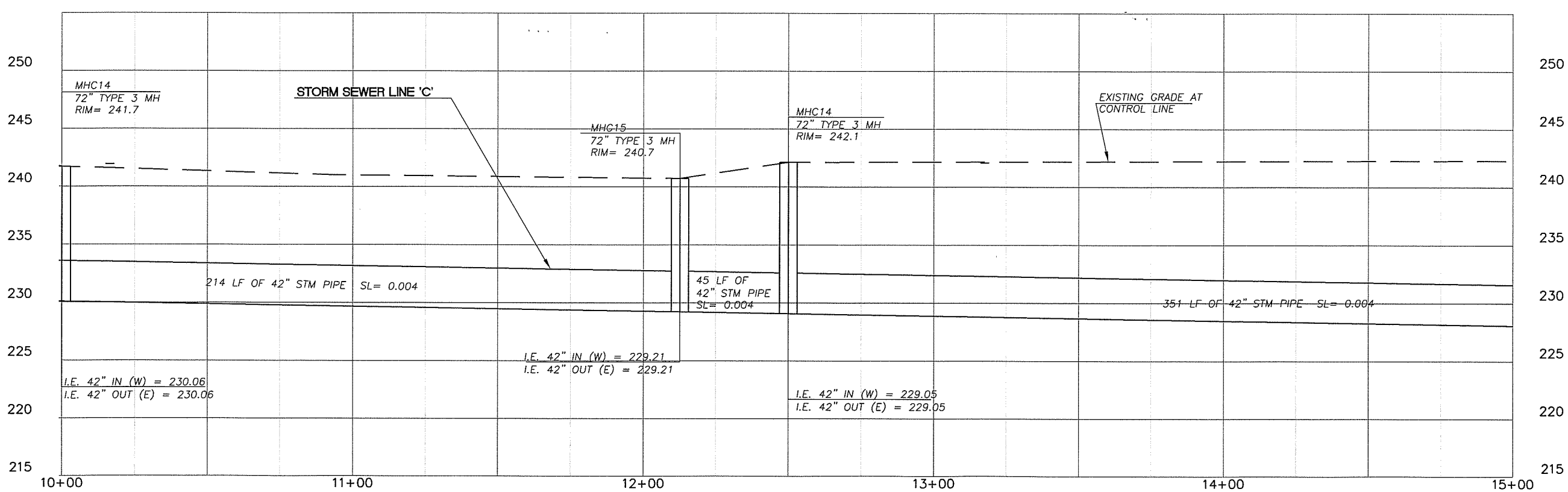

DESIGNED	JM
DRAWN	RRK
CRP	310122
HOR.	1"=20'
VERT.	1"=5'
DATE	10/29/04
DWG:	DP103
SHEET	OF

CALL 48 HOURS BEFORE YOU DIG
1-800-553-4344
"It's the Law"
NORTHWEST UTILITIES NOTIFICATION CENTER

STATE OF WASHINGTON
JILL M. MORRISON
31148
REGISTERED PROFESSIONAL ENGINEER
EXPIRES: JULY 7, 2005

DESIGN & ENGINEERING DIVISION
DESIGN SECTION

NE 99TH STREET STORM SEWER
DRAINAGE PLAN (STA 10+00 TO 15+00)

proud past, promising future
CLARK COUNTY
WASHINGTON

N:\CIP\PROJECTS\310122-NE72Ave-H99toSTJohns\DESIGN\DWGS\DP103.dwg, 10/25/2004 3:52:54 PM, kerlinr

NOTES:

1. CONTRACTOR SHALL FIELD VERIFY (POTHOLE) ALL POTENTIAL UTILITY CROSSINGS PRIOR TO CONSTRUCTION. IF DIRECT CONFLICT EXISTS, NOTIFY THE ENGINEER AND UTILITY COMPANY. PROCEED ONLY AS DIRECTED AND PER STANDARD POLICY AND REGULATIONS. (COST INCLUDED IN BID ITEMS FOR STORM SEWER AND CULVERT PIPE).

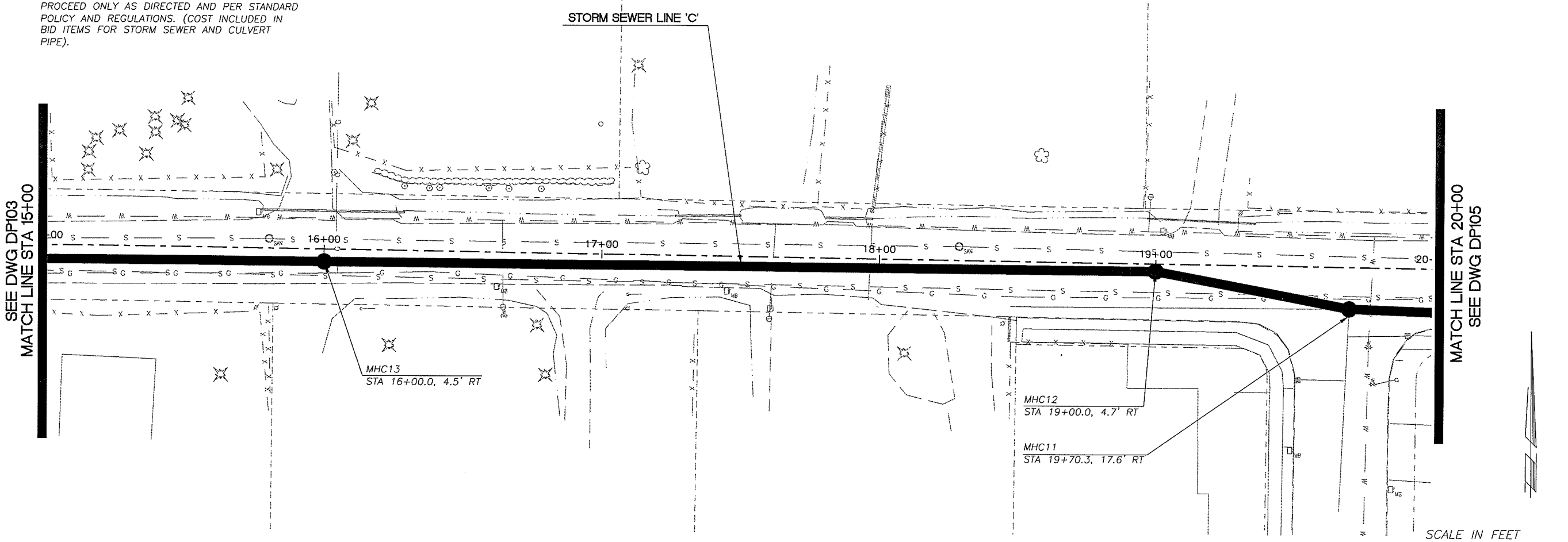

PRELIMINARY

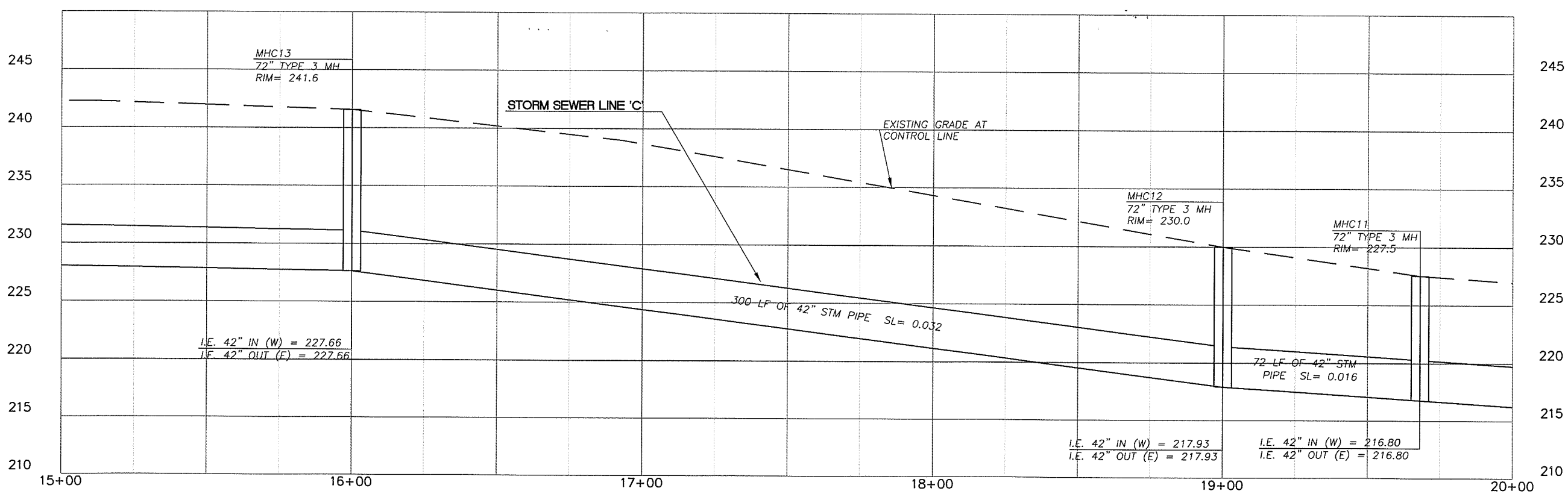

DESIGNED	JM
DRAWN	RRK
CRP	310122
HOR.	1"=20'
VERT.	1"=5'
DATE	10/29/04
DWG:	DP104
SHEET	OF

CALL 48 HOURS BEFORE YOU DIG
1-800-553-4344
"It's the Law"
NORTHWEST UTILITIES NOTIFICATION CENTER

STATE OF WASHINGTON
JAMES M. KEARNEY
31148
REGISTERED PROFESSIONAL ENGINEER
EXPIRES JULY 7, 2005

DESIGN & ENGINEERING DIVISION
DESIGN SECTION

NE 99TH STREET STORM SEWER
DRAINAGE PLAN (STA 15+00 TO 20+00)

proud past, promising future
CLARK COUNTY
WASHINGTON

N:\CIP\PROJECTS\310122-NE72Ave-H99toSTJohns\DESIGN\DWGS\DP104.dwg, 10/25/2004 3:39:05 PM, kerlinr

NOTES:

1. CONTRACTOR SHALL FIELD VERIFY (POTHOLE) ALL POTENTIAL UTILITY CROSSINGS PRIOR TO CONSTRUCTION. IF DIRECT CONFLICT EXISTS, NOTIFY THE ENGINEER AND UTILITY COMPANY. PROCEED ONLY AS DIRECTED AND PER STANDARD POLICY AND REGULATIONS. (COST INCLUDED IN BID ITEMS FOR STORM SEWER AND CULVERT PIPE).

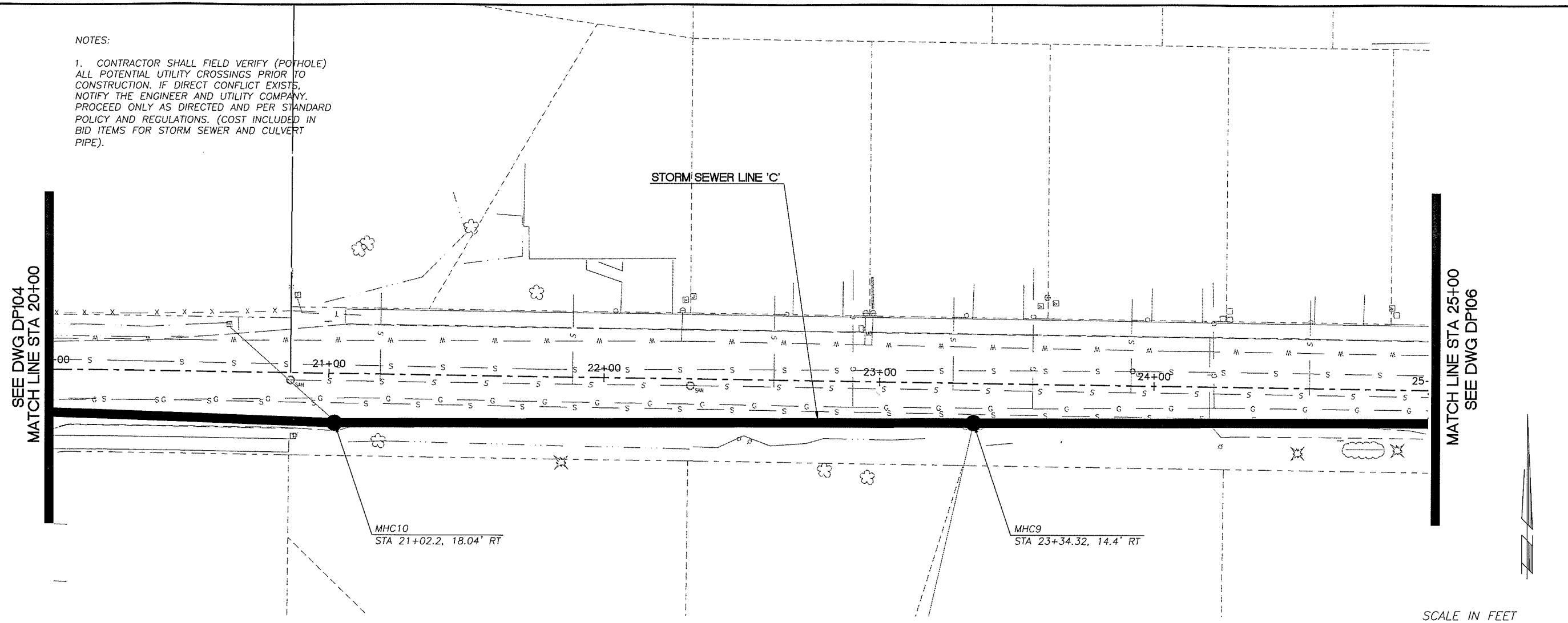

PRELIMINARY

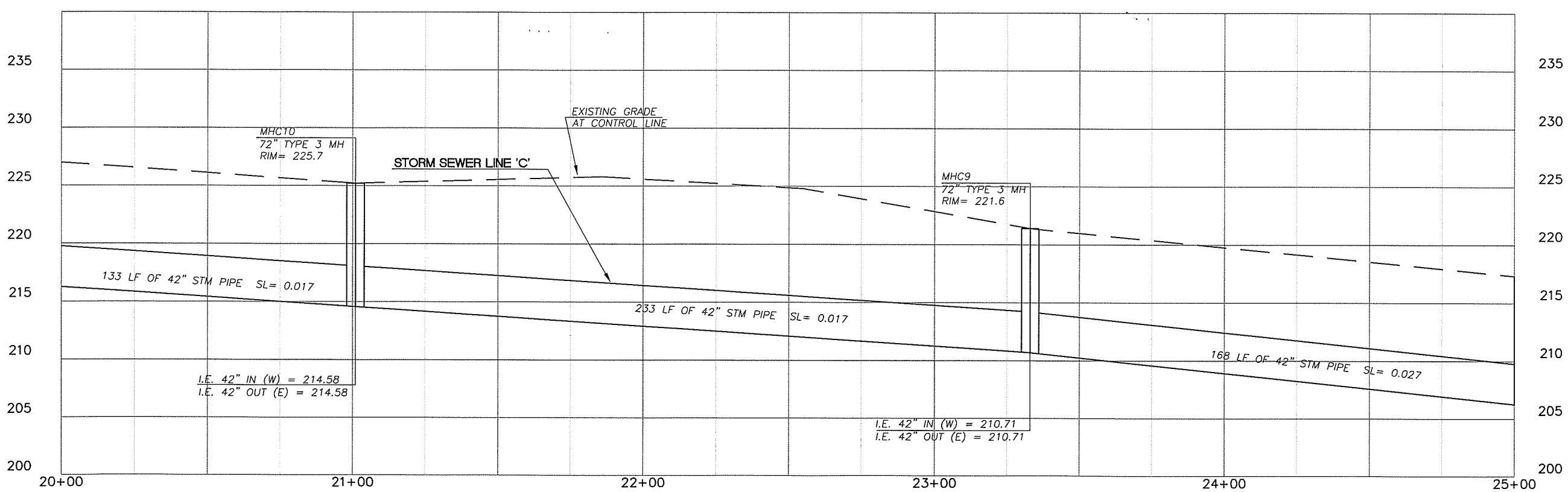

DESIGNED	JM
DRAWN	RRK
CRP	310122
HOR.	1"=20'
VERT.	1"=5'
DATE	10/29/04
DWG:	DP105
SHEET	OF

CALL 48 HOURS BEFORE YOU DIG
1-800-553-4344
"It's the Law"
NORTHWEST UTILITIES NOTIFICATION CENTER

STEVEN MILANE
STATE OF WASHINGTON
31148
REGISTERED PROFESSIONAL ENGINEER
EXPIRES JULY 7, 2005

DESIGN & ENGINEERING DIVISION
DESIGN SECTION

NE 99TH STREET STORM SEWER
DRAINAGE PLAN (STA 20+00 TO 25+00)

proud past, promising future
CLARK COUNTY
WASHINGTON

N:\CIP\PROJECTS\310122-NE72Ave-H99toSTJohns\DESIGN\DWGS\DP105.dwg, 10/25/2004 3:40:30 PM, kerlinr

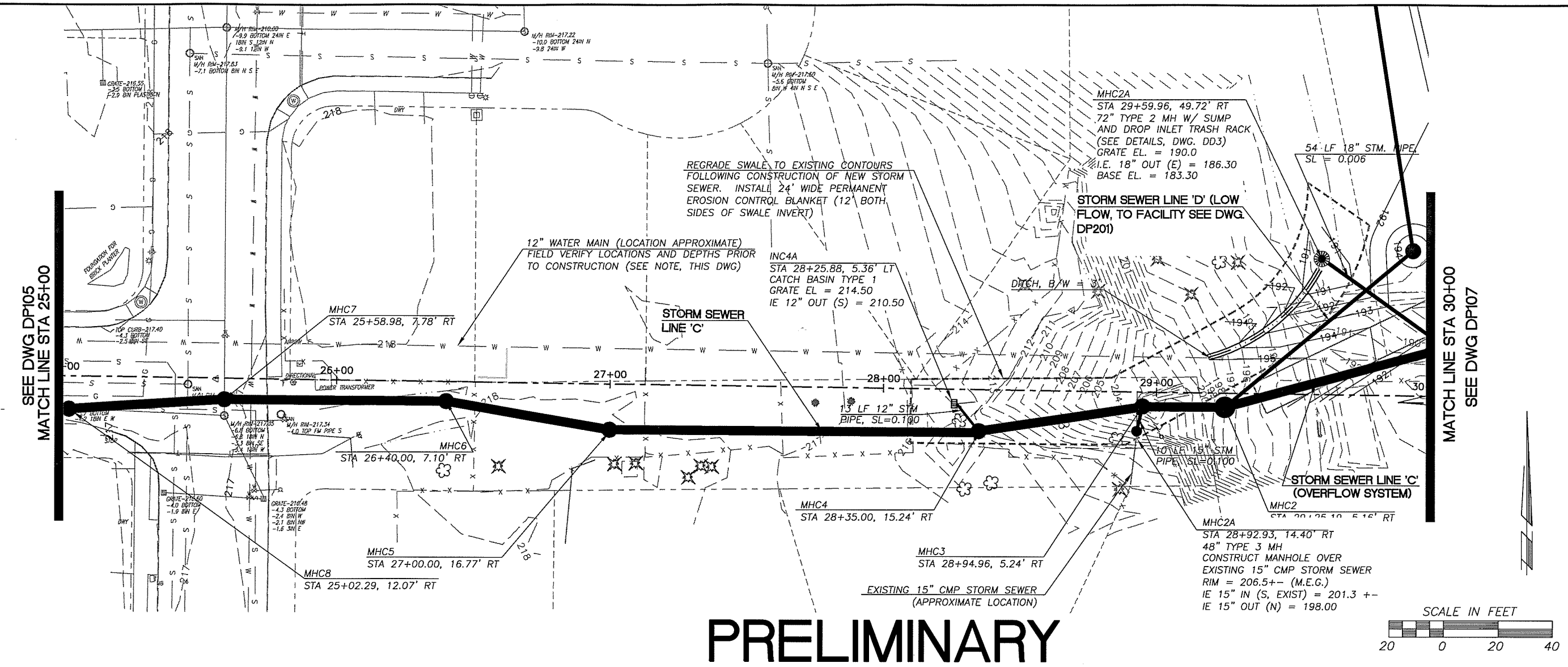

PRELIMINARY

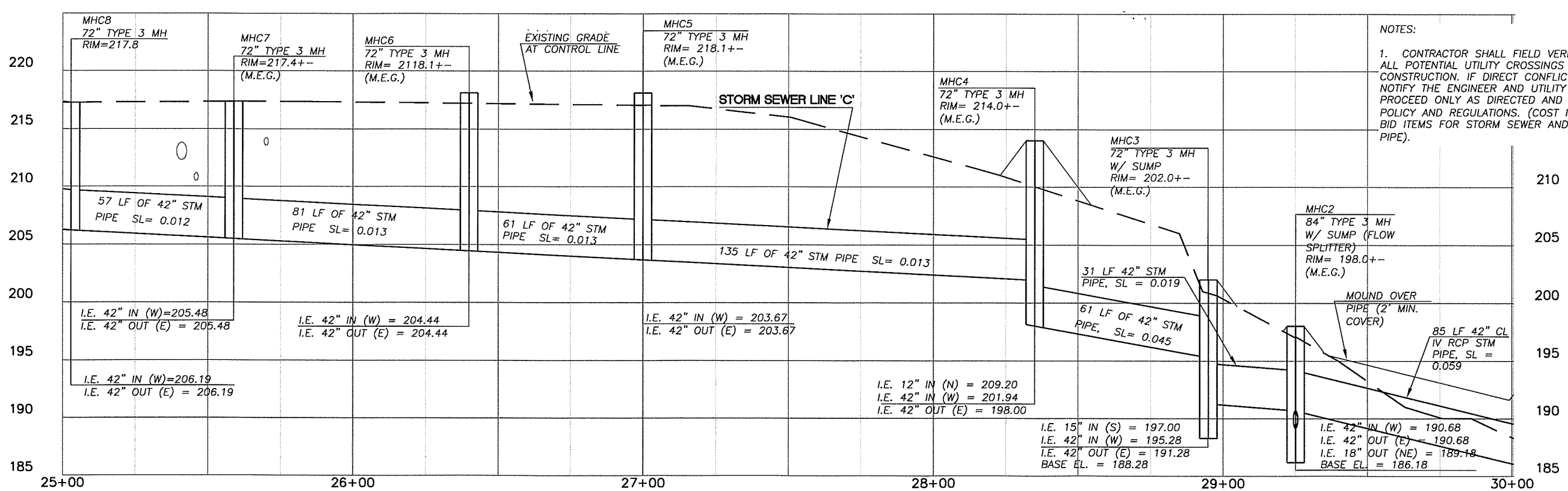

NOTES:

1. CONTRACTOR SHALL FIELD VERIFY (POTHOLE) ALL POTENTIAL UTILITY CROSSINGS PRIOR TO CONSTRUCTION. IF DIRECT CONFLICT EXISTS, NOTIFY THE ENGINEER AND UTILITY COMPANY. PROCEED ONLY AS DIRECTED AND PER STANDARD POLICY AND REGULATIONS. (COST INCLUDED IN BID ITEMS FOR STORM SEWER AND CULVERT PIPE).

DESIGNED	JM
DRAWN	RRK
CRP	310122
HOR.	1"=20'
VERT.	1"=5'
DATE	10/29/04
DWG:	DP106
SHEET	OF

CALL 48 HOURS BEFORE YOU DIG 1-800-553-4344 "It's the Law" NORTHWEST UTILITIES NOTIFICATION CENTER

STATE OF WASHINGTON WILLIAM R. MARNOCH 21148 REGISTERED PROFESSIONAL ENGINEER EXPIRES: JULY 7, 2005

DESIGN & ENGINEERING DIVISION
DESIGN SECTION

NE 99TH STREET STORM SEWER
DRAINAGE PLAN (STA 25+00 TO 30+00)

proud past, promising future
CLARK COUNTY WASHINGTON

N:\CIP\PROJECTS\310122-NE72Ave-H99toST\Johns\DESIGN\DWGS\DP106.dwg, 10/26/2004 8:56:31 AM, kerlinr

NOTES:

1. CONTRACTOR SHALL FIELD VERIFY (POTHOLE) ALL POTENTIAL UTILITY CROSSINGS PRIOR TO CONSTRUCTION. IF DIRECT CONFLICT EXISTS, NOTIFY THE ENGINEER AND UTILITY COMPANY. PROCEED ONLY AS DIRECTED AND PER STANDARD POLICY AND REGULATIONS. (COST INCLUDED IN BID ITEMS FOR STORM SEWER AND CULVERT PIPE).

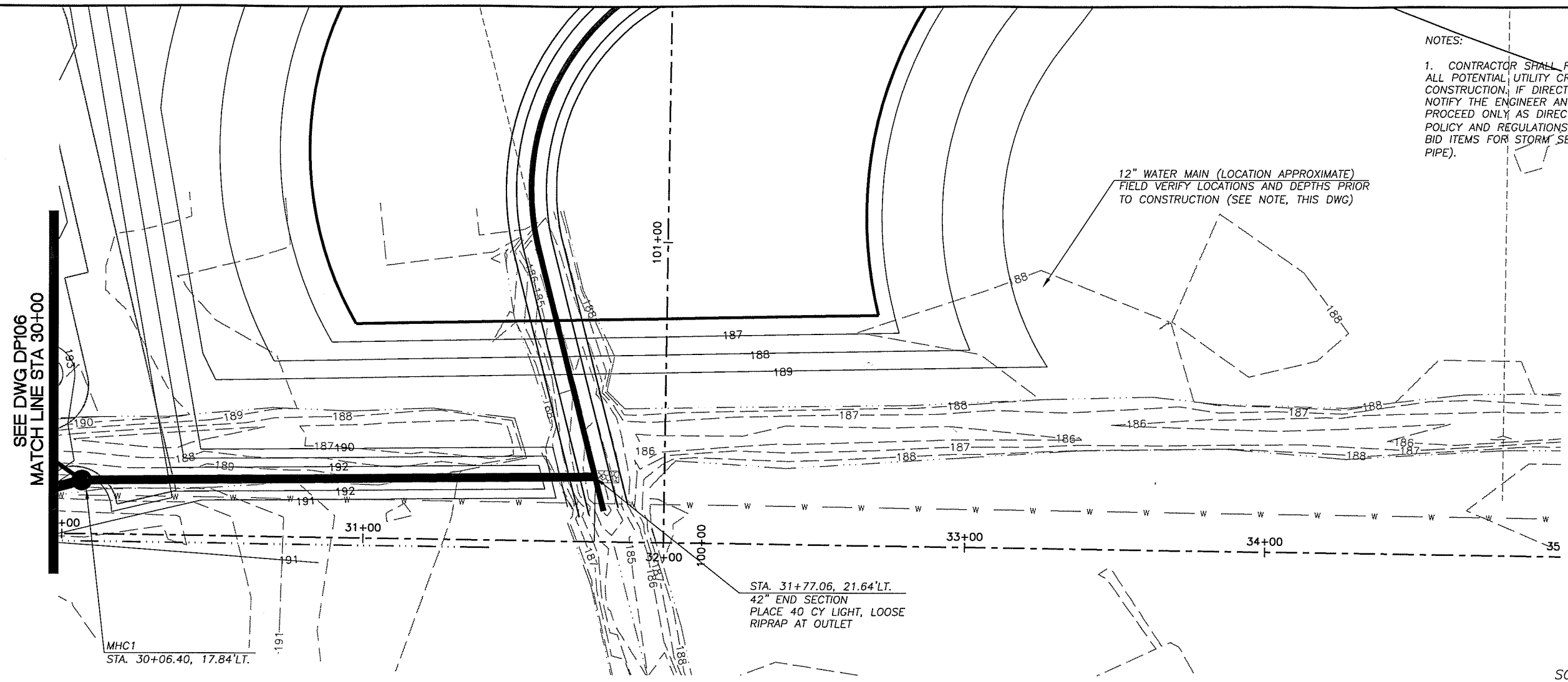

SCALE IN FEET

20 0 20 40

PRELIMINARY

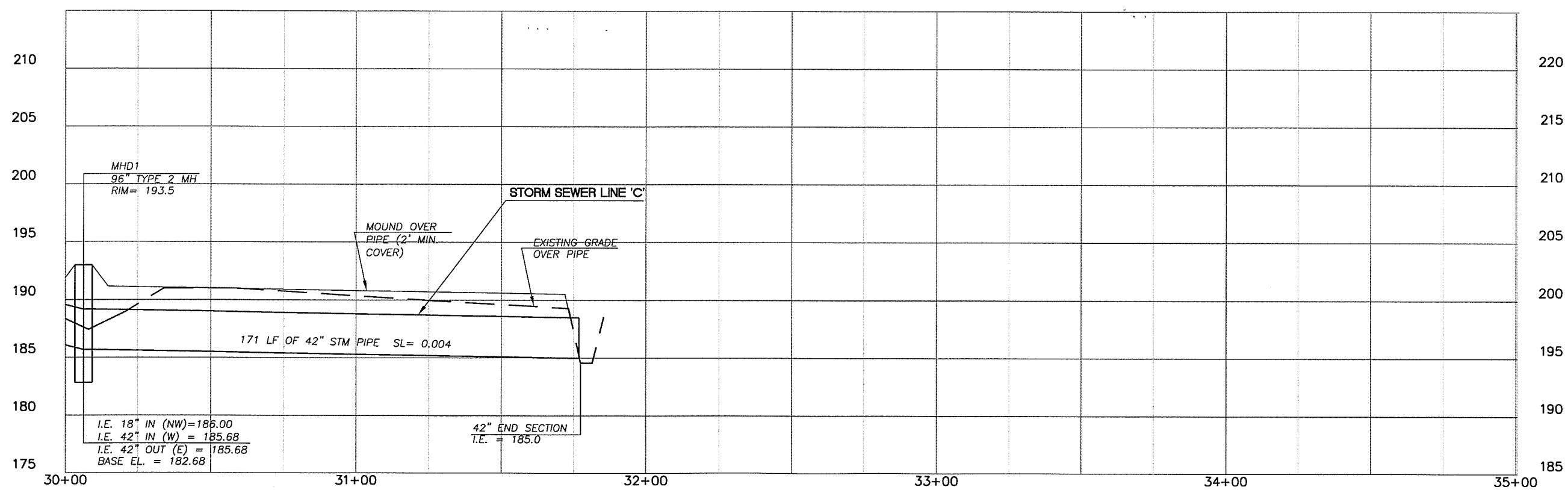

DESIGNED	JM
DRAWN	RRK
CRP	310122
HOR.	1"=20'
VERT.	1"=5'
DATE	10/29/04
DWG:	DP107
SHEET	OF

CALL 48 HOURS BEFORE YOU DIG
1-800-553-4344
"It's the Law"
NORTHWEST UTILITIES NOTIFICATION CENTER

JOHN E. MILLINE
STATE OF WASHINGTON
22318
REGISTERED PROFESSIONAL ENGINEER
EXPIRES OCT 7, 2005

DESIGN & ENGINEERING DIVISION
DESIGN SECTION

NE 99TH STREET STORM SEWER
DRAINAGE PLAN (STA 30+00 TO 35+00)

proud past, promising future
CLARK COUNTY
WASHINGTON

N:\CIP\PROJECTS\310122-NE72Ave-H99toST1ohns\DESIGN\DWG\SD\P107.dwg, 10/26/2004 9:12:16 AM, kerlinr

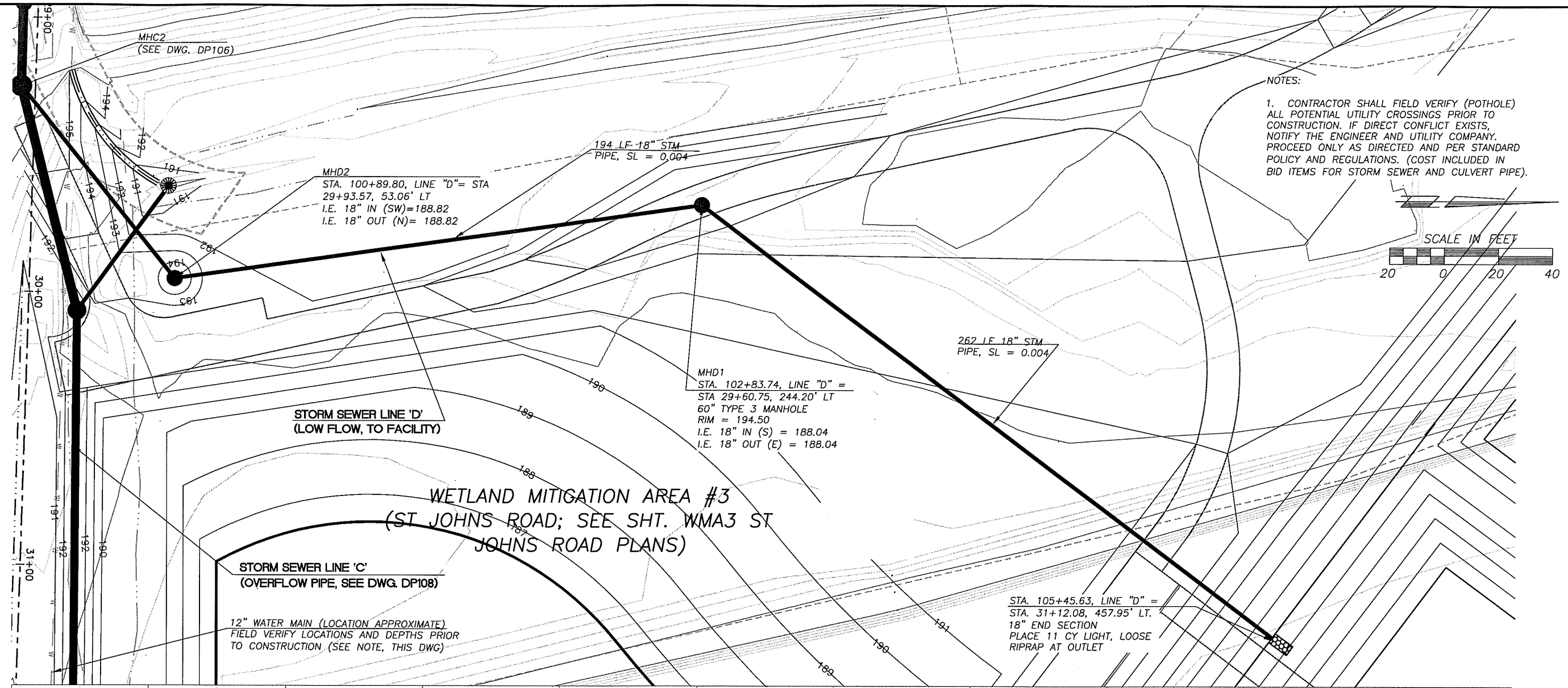

NOTES:

1. CONTRACTOR SHALL FIELD VERIFY (POTHOLE) ALL POTENTIAL UTILITY CROSSINGS PRIOR TO CONSTRUCTION. IF DIRECT CONFLICT EXISTS, NOTIFY THE ENGINEER AND UTILITY COMPANY. PROCEED ONLY AS DIRECTED AND PER STANDARD POLICY AND REGULATIONS. (COST INCLUDED IN BID ITEMS FOR STORM SEWER AND CULVERT PIPE).

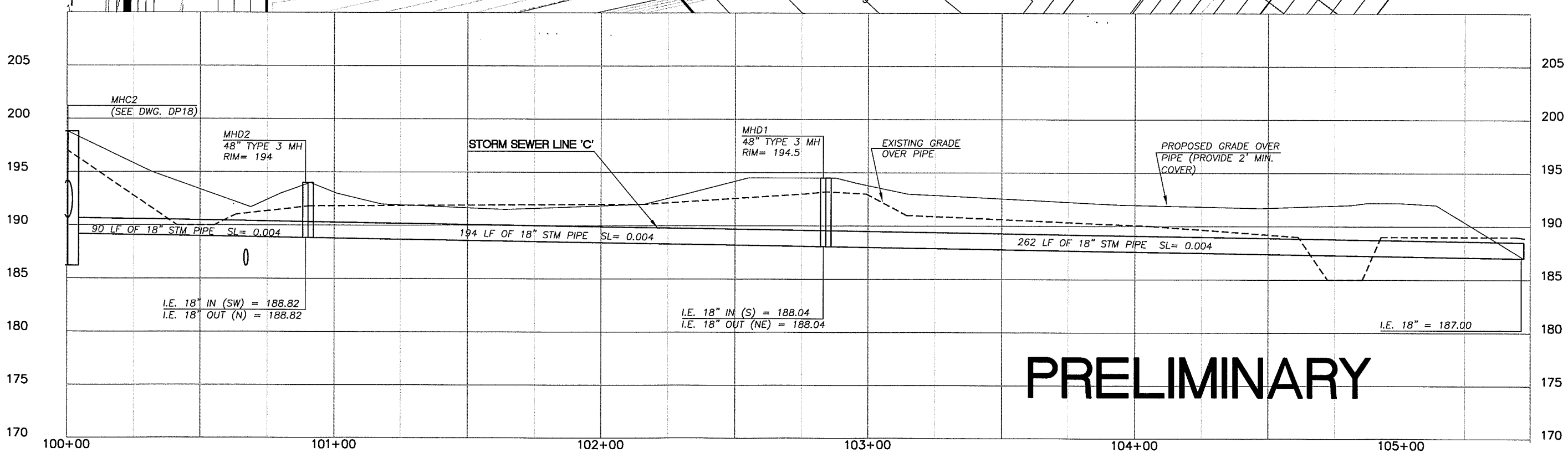

PRELIMINARY

DESIGNED JM
DRAWN RRK
CRP 310122
HOR. 10/11/04
VERT. 1"=5'
DATE 10/29/04
DWG. DP201
SHEET OF

CALL 48 HOURS BEFORE YOU DIG 1-800-553-4344 "It's the Law" NORTHWEST UTILITIES NOTIFICATION CENTER

STATE OF WASHINGTON JOHN MILNE BERNTSEN 31148 REGISTERED PROFESSIONAL ENGINEER EXPIRES: JULY 7, 2005

DESIGN & ENGINEERING DIVISION
DESIGN SECTION

NE 72ND AVENUE
DRAINAGE PLAN; STORM SEWER LINE "D"

proud past, promising future
CLARK COUNTY WASHINGTON

N:\CIP\PROJECTS\310122-NE72Ave-H99toSTJohns\DESIGN\DWGS\DP201.dwg, 10/26/2004 9:39:43 AM, kerlinr

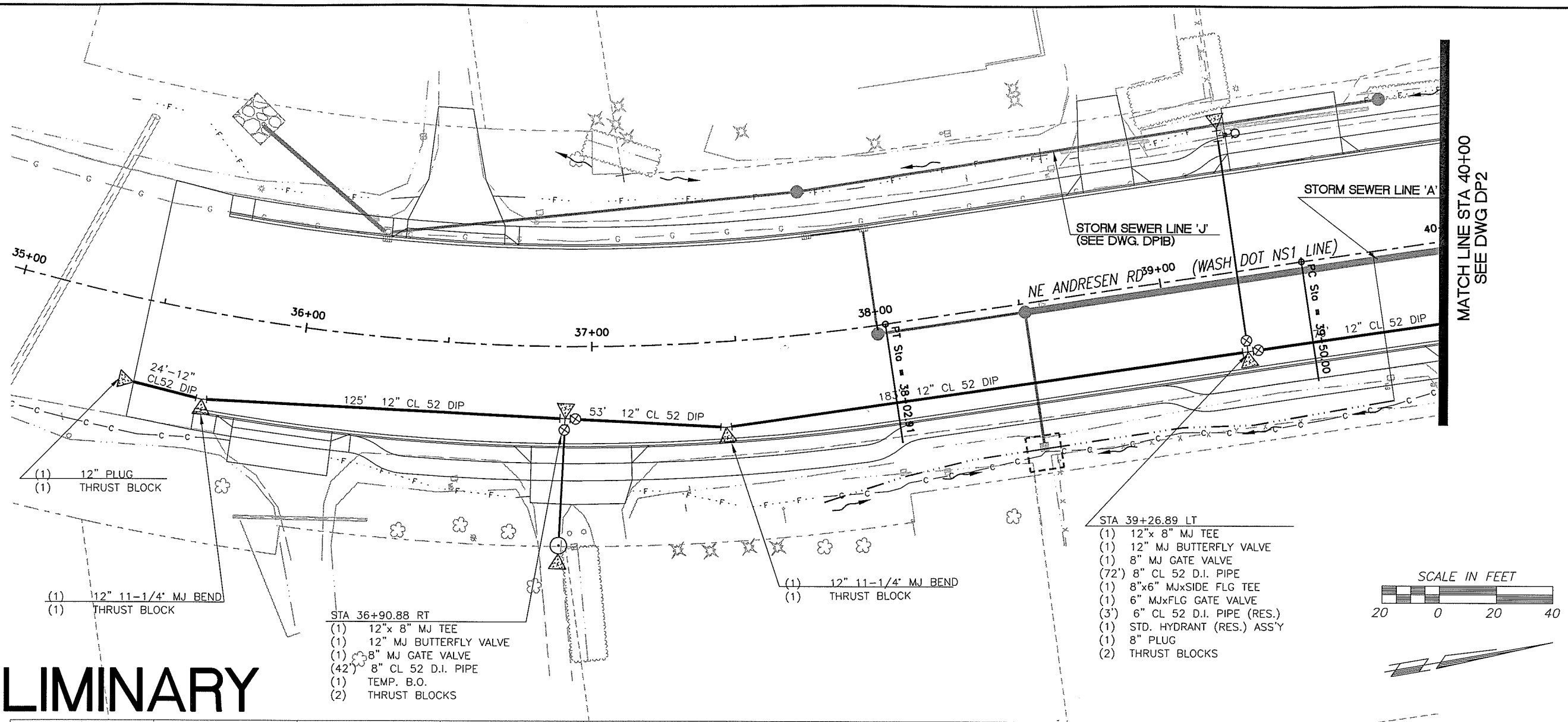

PRELIMINARY

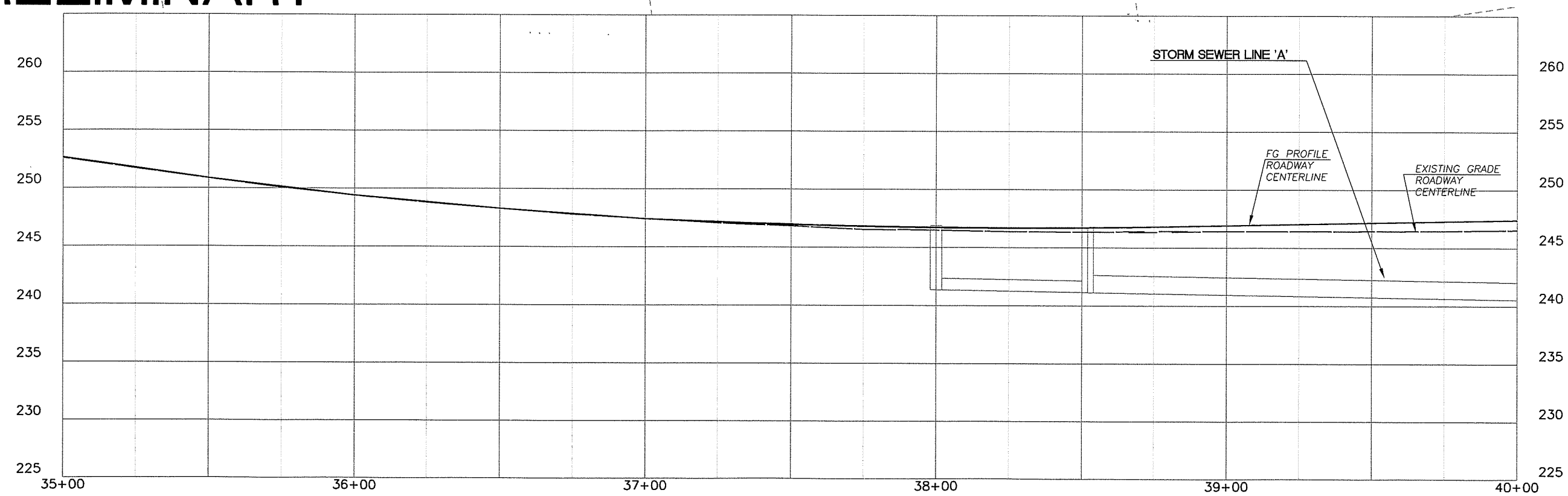

DESIGNED	JM
DRAWN	RRK
CRP	310122
HOR.	1"=20'
VERT.	1"=5'
DATE	10/29/04
DWG:	WP1
SHEET	OF

CALL 48 HOURS BEFORE YOU DIG
1-800-553-4344
It's the Law
NORTHWEST UTILITIES NOTIFICATION CENTER

STATE OF WASHINGTON
JAMES MILLER
31148
REGISTERED PROFESSIONAL ENGINEER
EXPIRES JULY 7, 2005

DESIGN & ENGINEERING DIVISION
DESIGN SECTION

NE 72ND AVENUE
WATER LINE PLAN (STA 35+00 TO 40+00)

proud past, promising future
CLARK COUNTY
WASHINGTON

N:\C\P\PROJECTS\310122-NE72Ave-H99toST Johns\DESIGN\DWGS\WP1.dwg, Layout1, 10/20/2004 1:46:22 PM, begleyk

PRELIMINARY

SCALE IN FEET
20 0 20 40

SEE DWG DP1
MATCH LINE STA 40+00

NE 72nd AVE

STORM SEWER LINE 'A'

41+00 42+00 43+00 44+00 45+

PC Sta = 41+46.22

PT Sta = 42+42.14

264' 12" CL 52 DIP

256' 12" CL 52 DIP

MATCH LINE STA 45+00
SEE DWG DP3

STA 40+11.21 RT
(1) 12"x 8" MJ TEE
(1) 12" MJ BUTTERFLY VALVE
(1) 8" MJ GATE VALVE
(42') 8" CL 52 D.I. PIPE
(1) TEMP. B.O.
(2) THRUST BLOCKS

STA 42+79.10 LT
(1) 12"x 8" MJ TEE
(1) 12" MJ BUTTERFLY VALVE
(1) 8" MJ GATE VALVE
(67') 8" CL 52 D.I. PIPE
(1) TEMP. B.O.
(2) THRUST BLOCKS

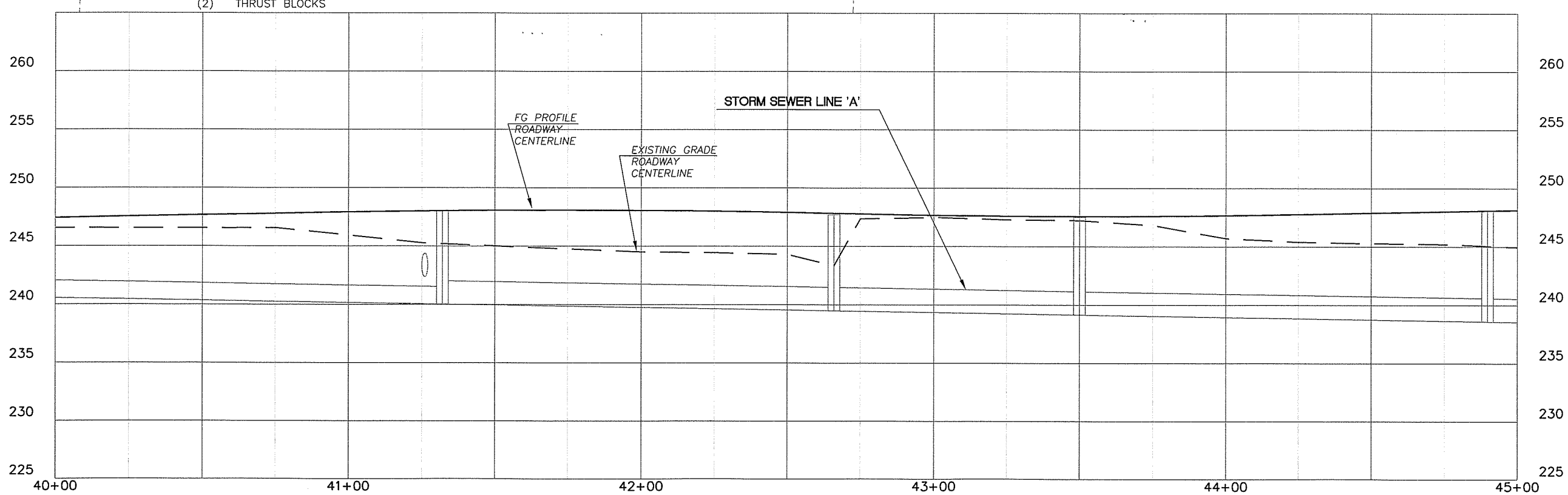

DESIGNED	JM
DRAWN	RRK
CRP	310122
HOR.	1"=20'
VERT.	1"=5'
DATE	10/29/04
DWG.	WP2
SHEET	OF

CALL 48 HOURS BEFORE YOU DIG
1-800-553-4344
"It's the Law"
NORTHWEST UTILITIES NOTIFICATION CENTER

JOHN STUART MILNE
STATE OF WASHINGTON
21148
REGISTERED PROFESSIONAL ENGINEER
EXPIRES JULY 7, 2005

DESIGN & ENGINEERING DIVISION
DESIGN SECTION

NE 72ND AVENUE
WATER LINE PLAN (STA 40+00 TO 45+00)

proud past, promising future
CLARK COUNTY
WASHINGTON

N:\CIP\PROJECTS\310122-NE72Ave-H99toSTJohns\DESIGN\DWGS\WP2.dwg, Layout1, 10/20/2004 1:48:40 PM, begleyk

PRELIMINARY

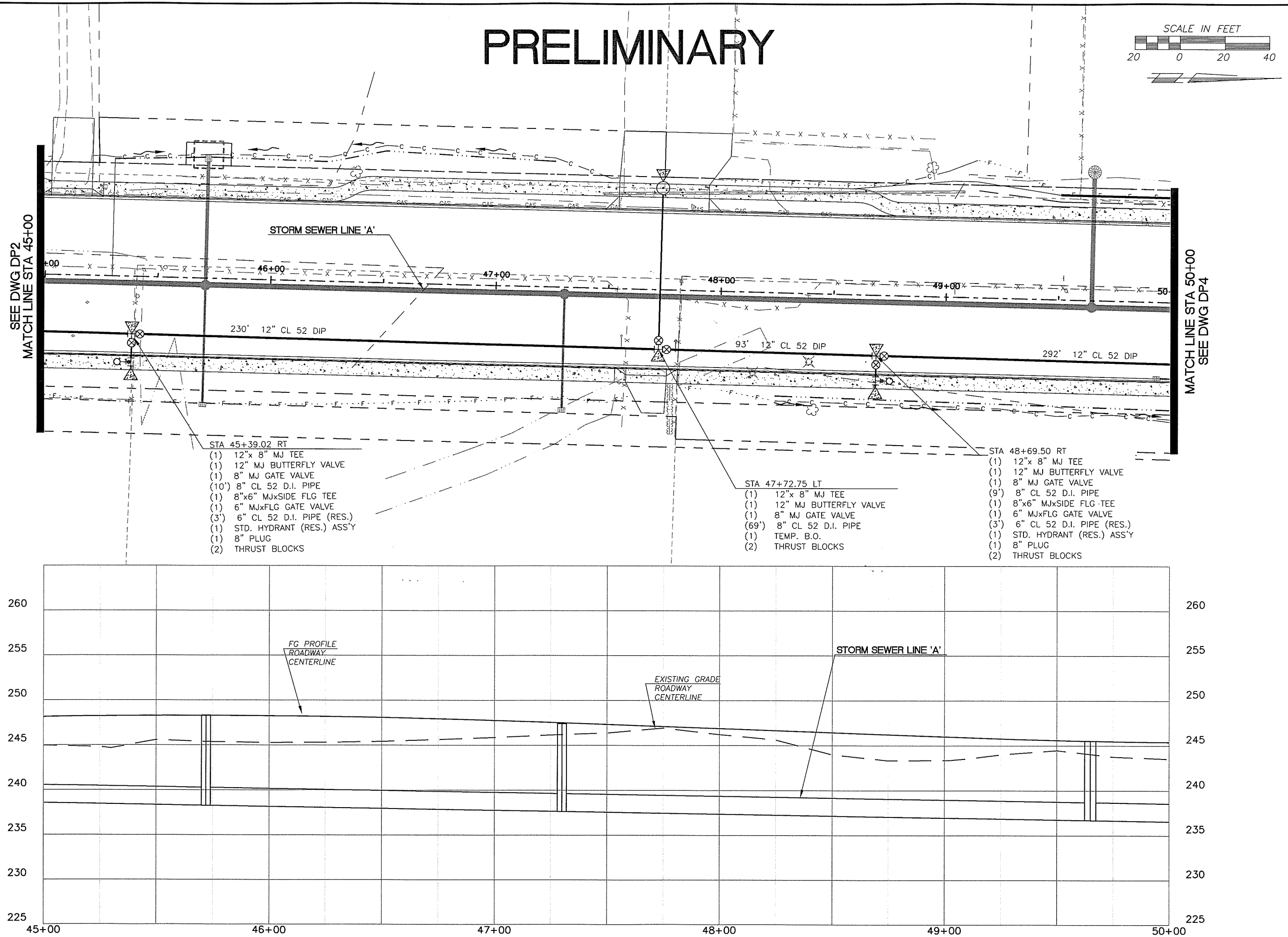

DESIGNED	JM
DRAWN	RRK
CRP	310122
HOR.	1"=20'
VERT.	1"=5'
DATE	10/29/04
DWG:	WP3
SHEET	OF

CALL 48 HOURS BEFORE YOU DIG
1-800-553-4344
"It's the Law"
NORTHWEST UTILITIES NOTIFICATION CENTER

STATE OF WASHINGTON
MILNE
REGISTERED PROFESSIONAL ENGINEER
EXPIRES: JULY 2, 2005

DESIGN & ENGINEERING DIVISION
DESIGN SECTION

NE 72ND AVENUE
WATER LINE PLAN (STA 45+00 TO 50+00)

proud past, promising future
CLARK COUNTY
WASHINGTON

N:\CIP\PROJECTS\310122-NE72Ave-H99toST.Johns\DESIGN\DWGS\WP3.dwg, Layout1, 10/20/2004 1:51:26 PM, begleyk

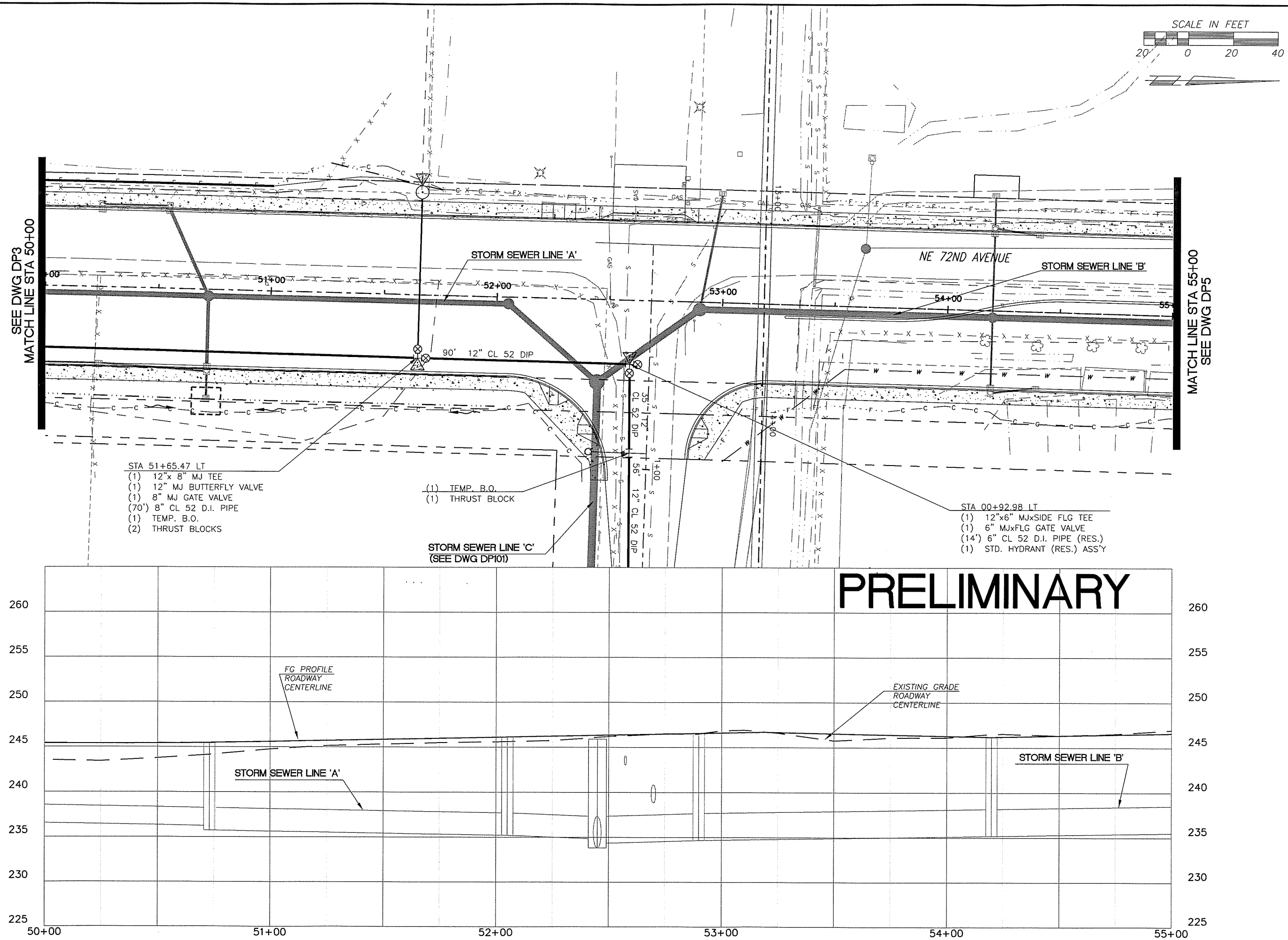

DESIGNED	JM
DRAWN	RRK
CRP	310122
HOR.	1"=20'
VERT.	1"=5'
DATE	10/29/04
DWG:	WP4
SHEET	OF

CALL 48 HOURS BEFORE YOU DIG
1-800-553-4344
"It's the Law"
NORTHWEST UTILITIES NOTIFICATION CENTER

LARRY D. MILNE
STATE OF WASHINGTON
31148
REGISTERED PROFESSIONAL ENGINEER
EXPIRES JULY 7, 2005

DESIGN & ENGINEERING DIVISION
DESIGN SECTION

NE 72ND AVENUE
WATER LINE PLAN (STA 50+00 TO 55+00)

proud past, promising future
CLARK COUNTY
WASHINGTON

N:\CIP\PROJECTS\310122-NE72Ave-H99toST Johns\DESIGN\DWGS\WP4.dwg, Layout1, 10/20/2004 1:53:39 PM, begleyk

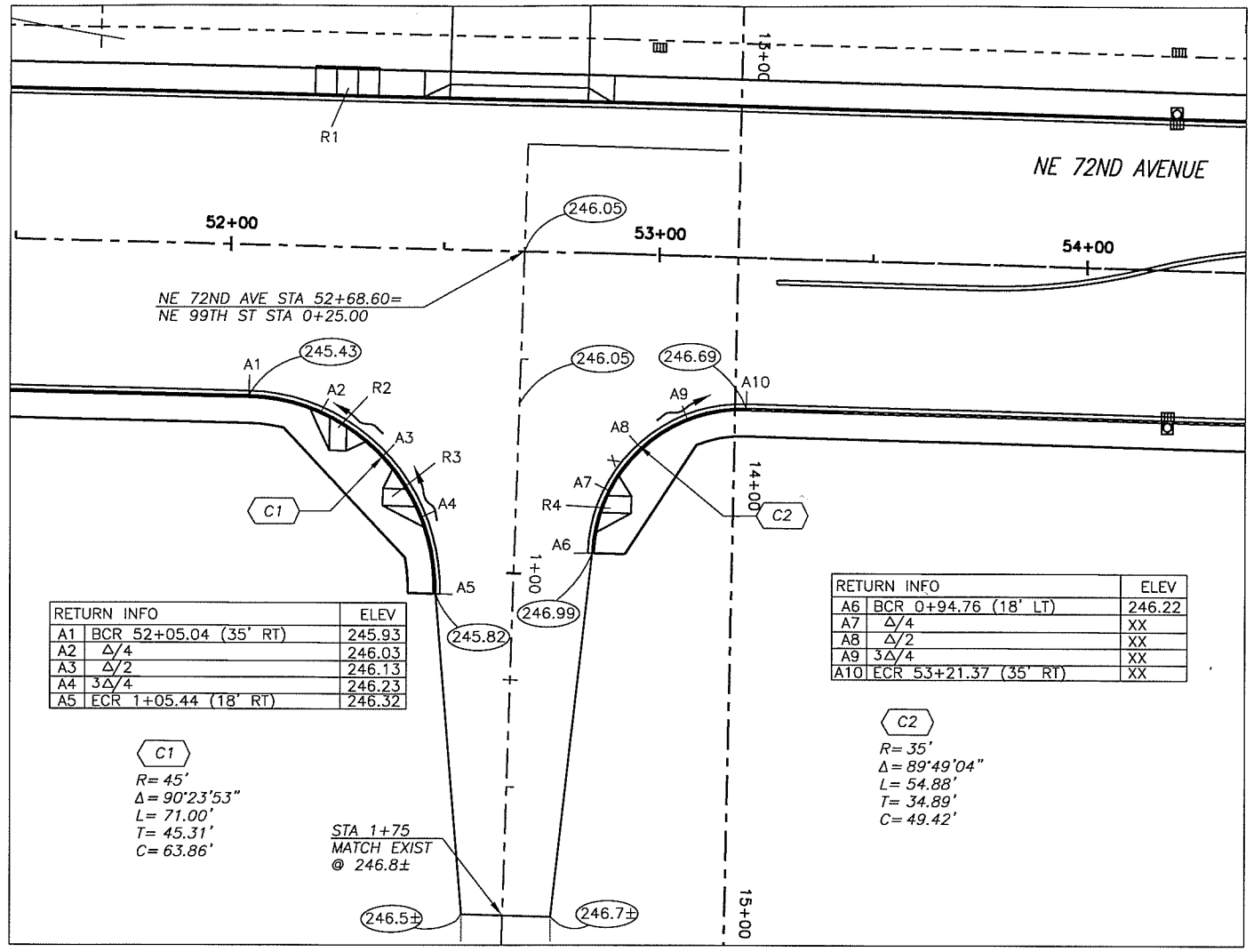

RETURN INFO		ELEV
A1	BCR 52+05.04 (35' RT)	245.93
A2	Δ/4	246.03
A3	Δ/2	246.13
A4	3Δ/4	246.23
A5	ECR 1+05.44 (18' RT)	246.32

C1
R= 45'
Δ= 90°23'53"
L= 71.00'
T= 45.31'
C= 63.86'

RETURN INFO		ELEV
A6	BCR 0+94.76 (18' LT)	246.22
A7	Δ/4	XX
A8	Δ/2	XX
A9	3Δ/4	XX
A10	ECR 53+21.37 (35' RT)	XX

C2
R= 35'
Δ= 89°49'04"
L= 54.88'
T= 34.89'
C= 49.42'

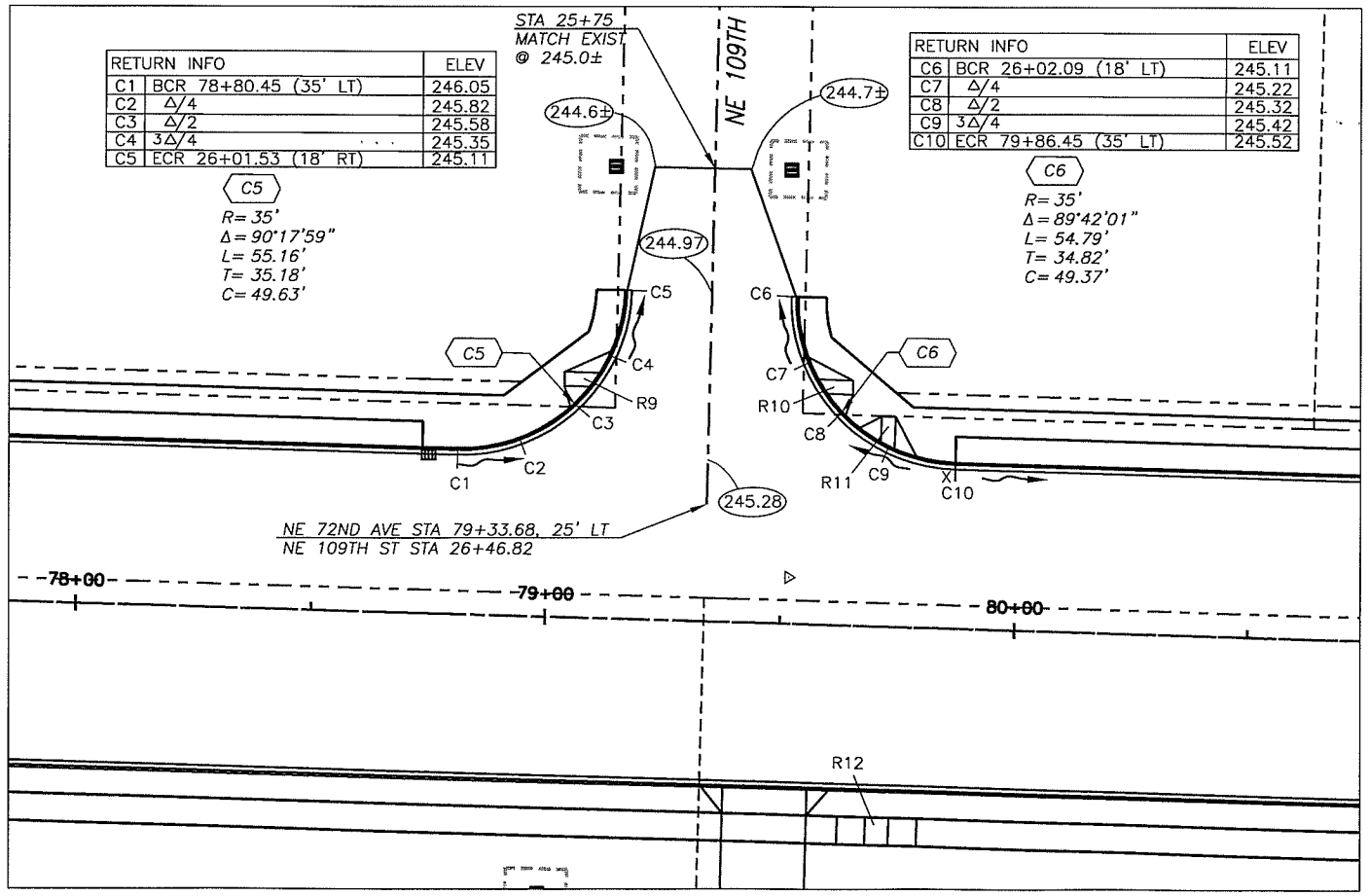

RETURN INFO		ELEV
C1	BCR 78+80.45 (35' LT)	246.05
C2	Δ/4	245.82
C3	Δ/2	245.58
C4	3Δ/4	245.35
C5	ECR 26+01.53 (18' RT)	245.11

C5
R= 35'
Δ= 90°17'59"
L= 55.16'
T= 35.18'
C= 49.63'

RETURN INFO		ELEV
C6	BCR 26+02.09 (18' LT)	245.11
C7	Δ/4	245.22
C8	Δ/2	245.32
C9	3Δ/4	245.42
C10	ECR 79+86.45 (35' LT)	245.52

C6
R= 35'
Δ= 89°42'01"
L= 54.79'
T= 34.82'
C= 49.37'

SCALE IN FEET
20 0 20 40

CL OF RAMPS @ FACE			
#	STATION	OFFSET	TYPE
R1	52+29.7	35.0' LT	TYPE 3
R2	52+29.7	38.1' RT	TYPE 1
R3	0+76.3	23.6' RT	TYPE 1
R4	0+75.7	23.6' LT	TYPE 1
R5	XX+XX	XX.X' RT	TYPE 1
R6	XX+XX	XX.X' LT	TYPE 1
R7	66+19.2	38.1' LT	TYPE 1
R8	66+19.2	35.0' RT	TYPE 3
R9	26+20.8	23.8' RT	TYPE 1
R10	26+21.1	23.6' RT	TYPE 1
R11	79+72.0	37.0' LT	TYPE 1
R12	79+72.0	35.0' LT	TYPE 3

PRELIMINARY

DESIGNED	MME
DRAWN	RRK
CRP	310122
HOR.	1"=20'
VERT.	1"=5'
DATE	6/20/03
DWG:	101
SHEET	OF

CALL 48 HOURS BEFORE YOU DIG
1-800-553-4344
"It's the Law"
NORTHWEST UTILITIES NOTIFICATION CENTER

STATE OF WASHINGTON
MICHAEL W. MEMICK
REGISTERED PROFESSIONAL ENGINEER
20030
EXPIRES: MAY 28, 2005

DESIGN & ENGINEERING DIVISION
DESIGN SECTION

NE 72ND AVENUE
INTERSECTION PLAN

CLARK COUNTY
WASHINGTON
proud past, promising future

N:\CIP\PROJECTS\310122-NE72Ave-H99toST.Johns\DESIGN\DWGS\\01.dwg, Layout1, 10/21/2004 1:36:10 PM, begleyk

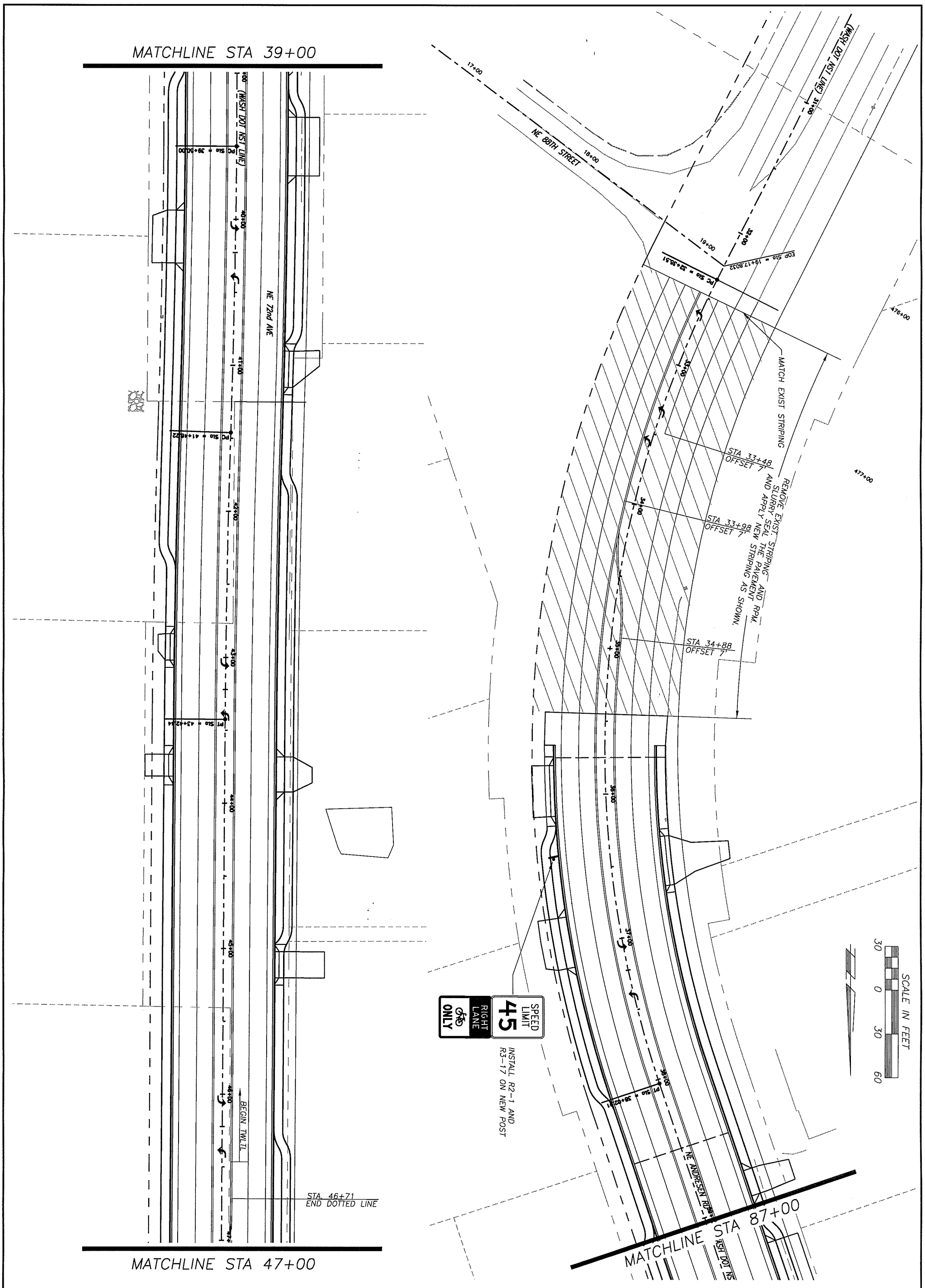

CLARK COUNTY WASHINGTON
proud past, promising future

DESIGN & ENGINEERING DIVISION
DESIGN SECTION

NE 72ND AVENUE
RAILROAD CROSSING SIGNING AND STRIPING

EJAZ KHAN STATE OF WASHINGTON 35938 REGISTERED PROFESSIONAL ENGINEER
EXPIRES: JAN. 01, 2006

CALL 48 HOURS BEFORE YOU DIG
1-800-553-4344
"It's the Law"
NORTHWEST UTILITIES NOTIFICATION CENTER

DESIGNED	EK
DRAWN	KB
CRP	310122
HOR.	1"=30'
VERT.	NA
DATE	9/1/04
DWG:	SS01
SHEET	OF

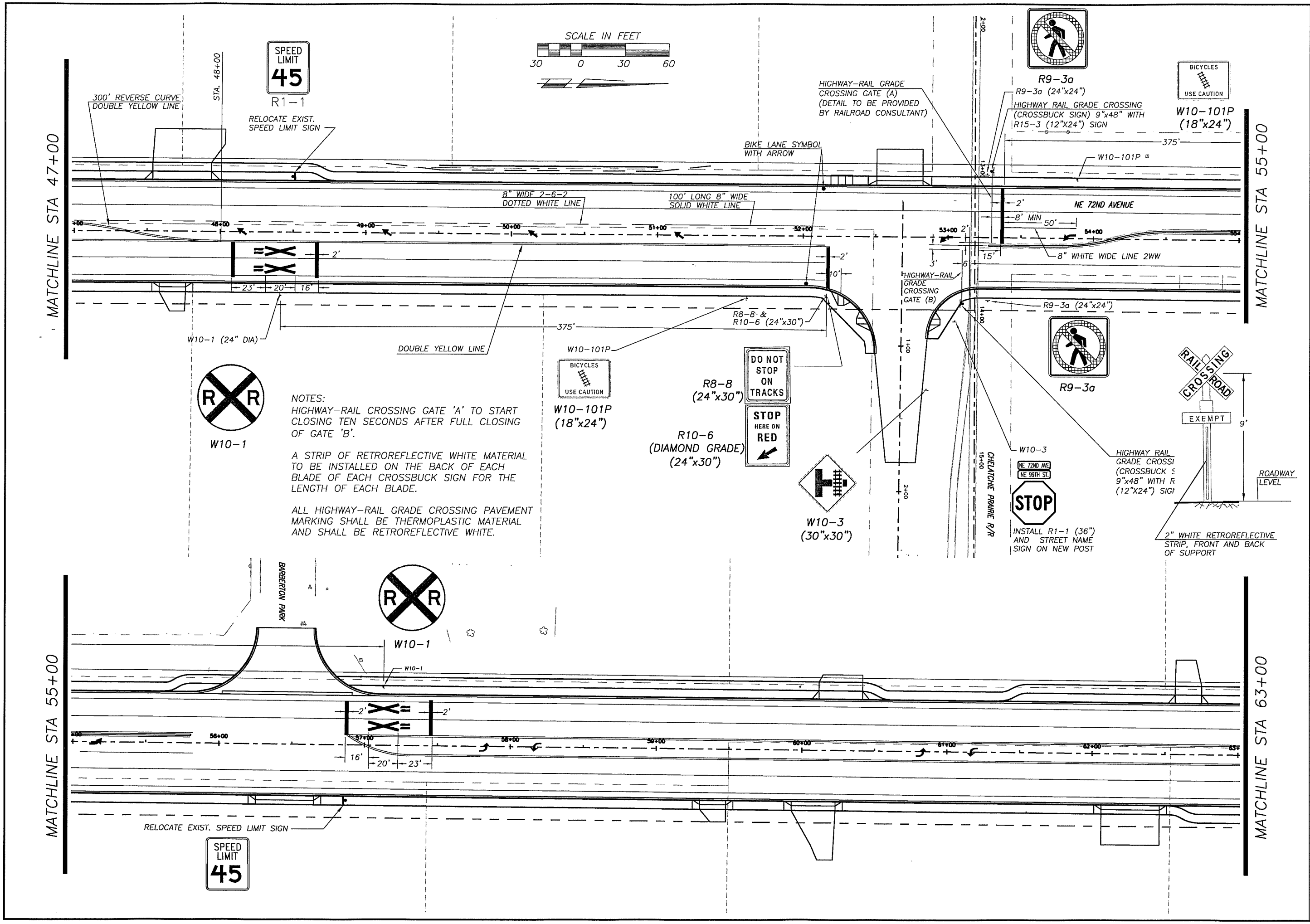

DESIGNED EK
DRAWN KB
CRP 310122
HOR. 1"=30'
VERT. NA
DATE 9/1/04
DWG: SS02
SHEET OF

CALL 48 HOURS BEFORE YOU DIG 1-800-553-4344 "It's the Law" NORTHWEST UTILITIES NOTIFICATION CENTER

STATE OF WASHINGTON 35938 REGISTERED PROFESSIONAL ENGINEER
EXPIRES JAN. 31, 2005

DESIGN & ENGINEERING DIVISION
DESIGN SECTION

NE 72ND AVENUE
RAILROAD CROSSING SIGNING AND STRIPING

proud past, promising future
CLARK COUNTY WASHINGTON

J:\SS72ndS01-4.dwg, 10/26/2004 3:03:07 PM, kerlinr

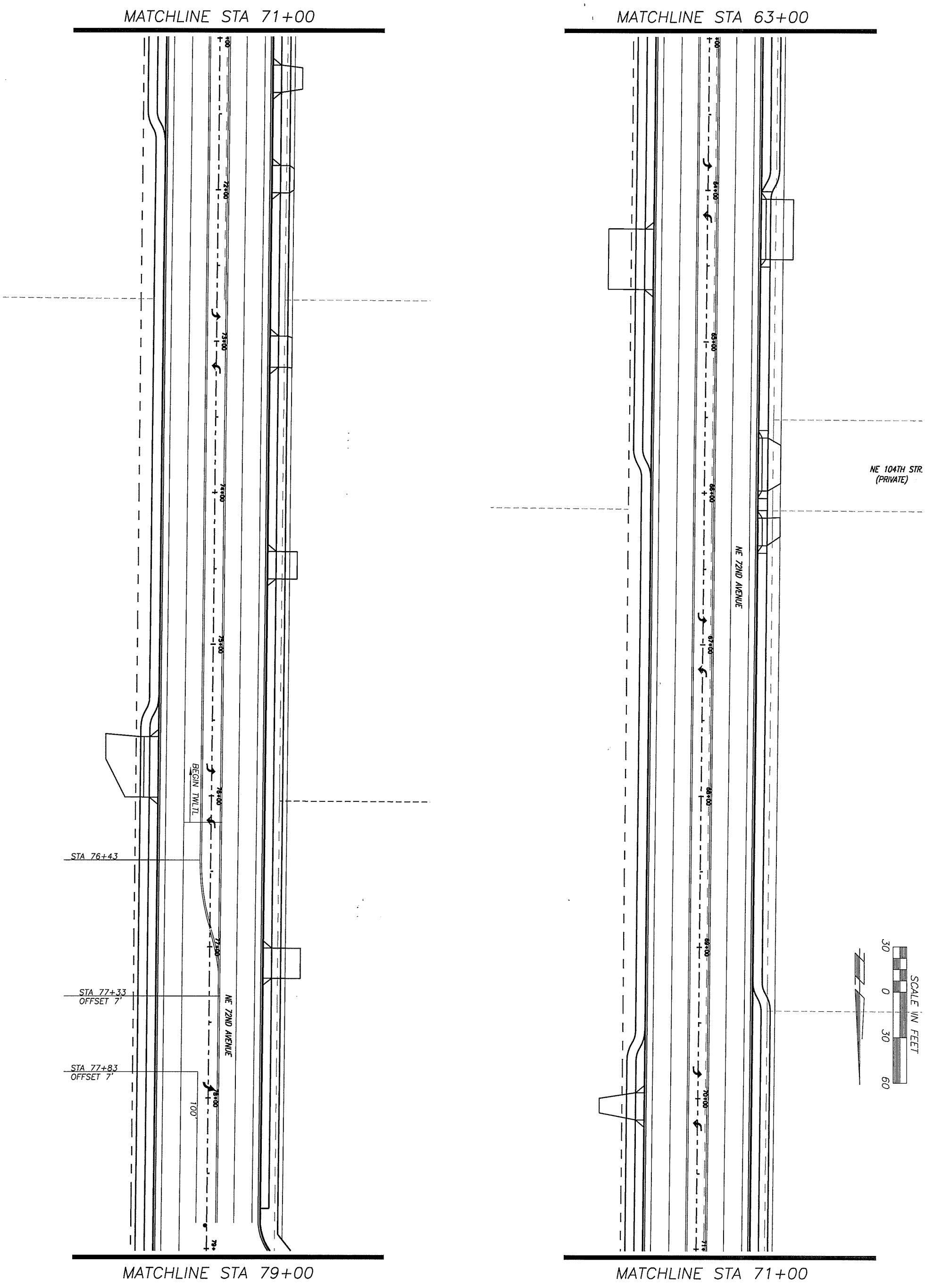

proud past, promising future

CLARK COUNTY
WASHINGTON

DESIGN & ENGINEERING DIVISION
DESIGN SECTION

NE 72ND AVENUE
RAILROAD CROSSING SIGNING AND STRIPING

EJAZ KHAN
STATE OF WASHINGTON
35938
REGISTERED
PROFESSIONAL ENGINEER
EXPIRES: JAN. 01, 2006

CALL 48 HOURS
BEFORE YOU DIG
1-800-
553-4344
"It's the Law"
NORTHWEST
UTILITIES
NOTIFICATION CENTER

DESIGNED	EK
DRAWN	KB
CRP	310122
HOR.	1"=30'
VERT.	NA
DATE	9/1/04
DWG:	SS03
SHEET	OF

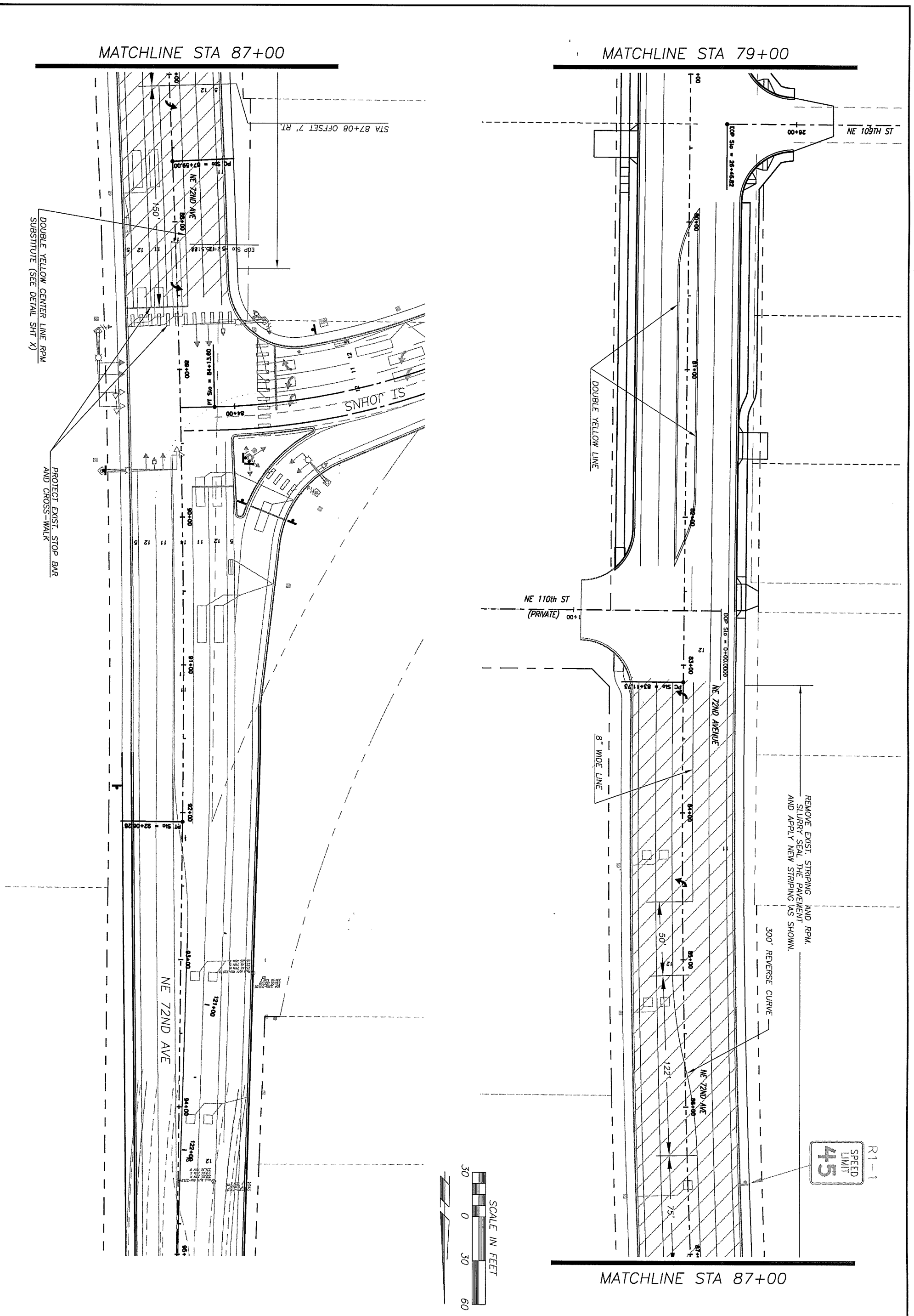

CLARK COUNTY
WASHINGTON
proud past, promising future

DESIGN & ENGINEERING DIVISION
DESIGN SECTION

NE 72ND AVENUE
RAILROAD CROSSING SIGNING AND STRIPING

EJAZ KHAN
STATE OF WASHINGTON
35938
REGISTERED
PROFESSIONAL ENGINEER
EXPIRES: JAN. 01, 2006

CALL 48 HOURS BEFORE YOU DIG
1-800-553-4344
"It's the Law"
NORTHWEST UTILITIES NOTIFICATION CENTER

DESIGNED	EK
DRAWN	KB
CRP	310122
HOR.	1"=30'
VERT.	NA
DATE	9/1/04
DWG:	SS04
SHEET	OF

NOTES:

1. ADJUST TO MATCH EXISTING TRACK FROM STATION 1+00.00 TO 1+50.00.
2. REMOVE EXISTING TRACKS AND INSTALL NEW TRACKS.
3. ADJUST TO MATCH EXISTING TRACK FROM STATION 4+33.21 TO 5+41.10
4. ADJUST TO MATCH EXISTING TRACK FROM STATION 101+90.10 TO 103+41.00
5. RR GRADE CROSSING GATE, AT THE DISCRETION OF THE ENGINEER, WILL BE SUPPLEMENTED/COMPLIMENTED BY WARNING SIGNAL MOUNTED ON CANTILEVER ARM TYPE 18-1-70 OF CALTRANS STANDARD DRAWING ES-6J OR SIMILAR. CONTRACTOR SHALL SUBMIT DETAILED DRAWINGS OF GATE MECHANISM FOR ALL OPTIONS OF THE BID SCHEDULE BEING QUOTED BY THE BIDDER.

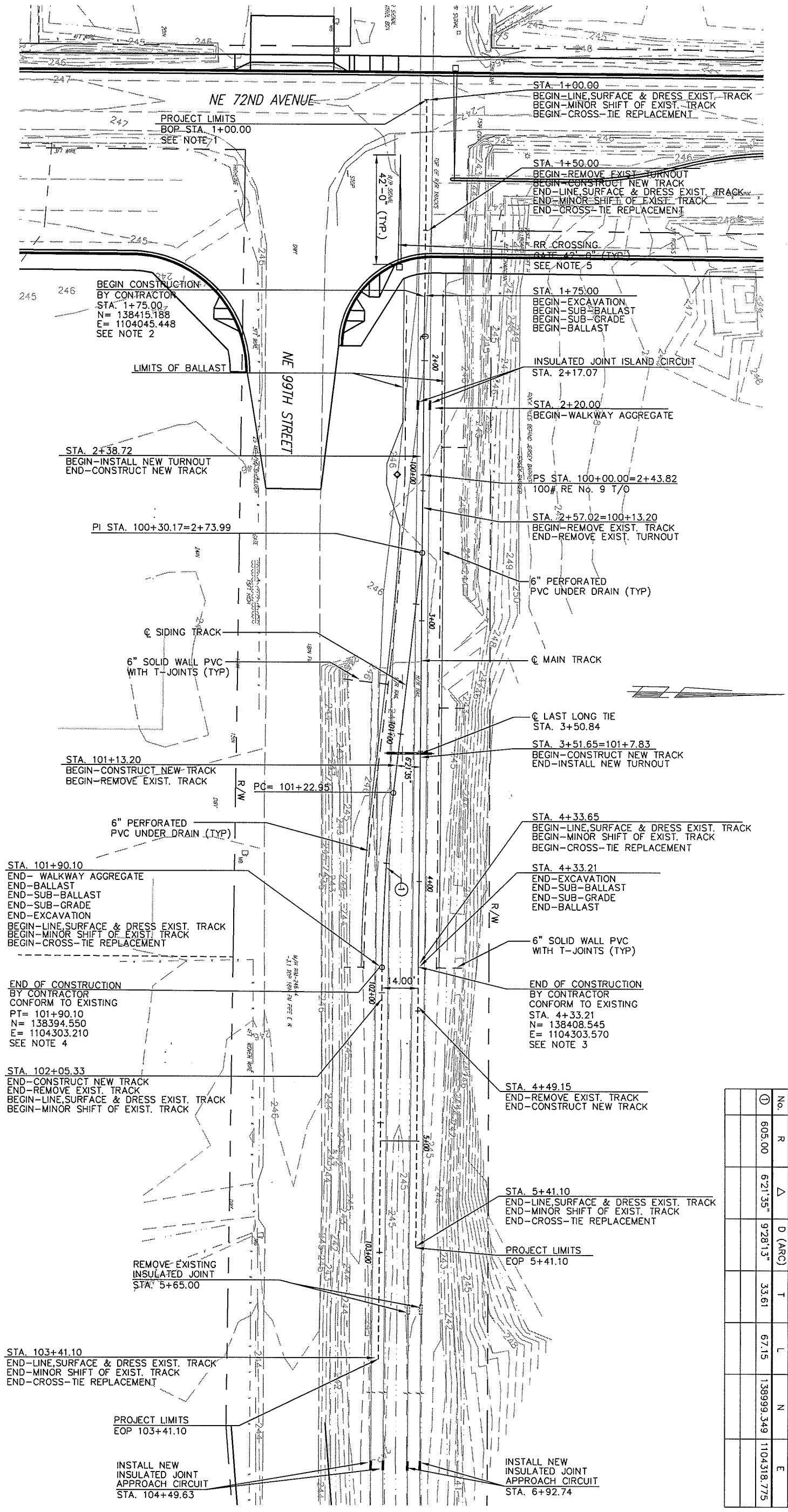

CURVE DATA

No.	R	Δ	D (ARC)	T	L	N	E
1	605.00	6°21'35"	9°28'13"	33.61	67.15	138999.349	1104318.775

proud past, promising future
CLARK COUNTY
WASHINGTON

DESIGN & ENGINEERING DIVISION
DESIGN SECTION

NE 72ND AVENUE
LAYOUT MAIN TRACK AND SIDING

MICHAEL M. EMRICK
STATE OF WASHINGTON
29030
REGISTERED PROFESSIONAL ENGINEER
EXPIRES: MAY 26, 2005

CALL 48 HOURS BEFORE YOU DIG
1-800-553-4344
"It's the Law"
NORTHWEST UTILITIES NOTIFICATION CENTER

DESIGNED	KC
DRAWN	JC
CRP	180257
HOR.	1"=20'
VERT.	
DATE	06/03/04
DWG:	L-1
SHEET 1	OF 6

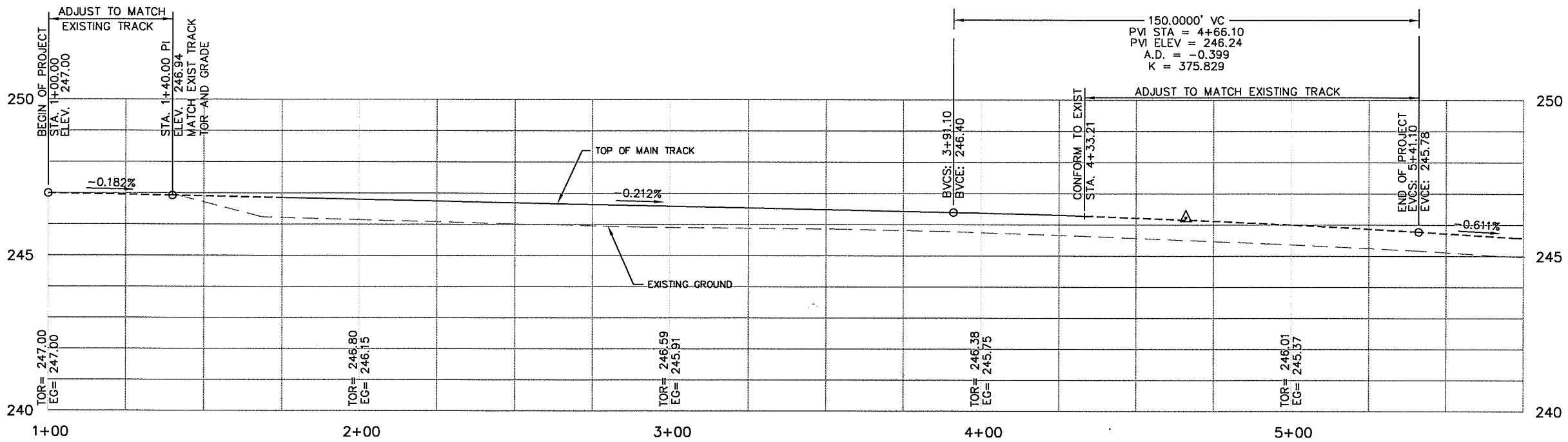

PROFILE MAIN TRACK

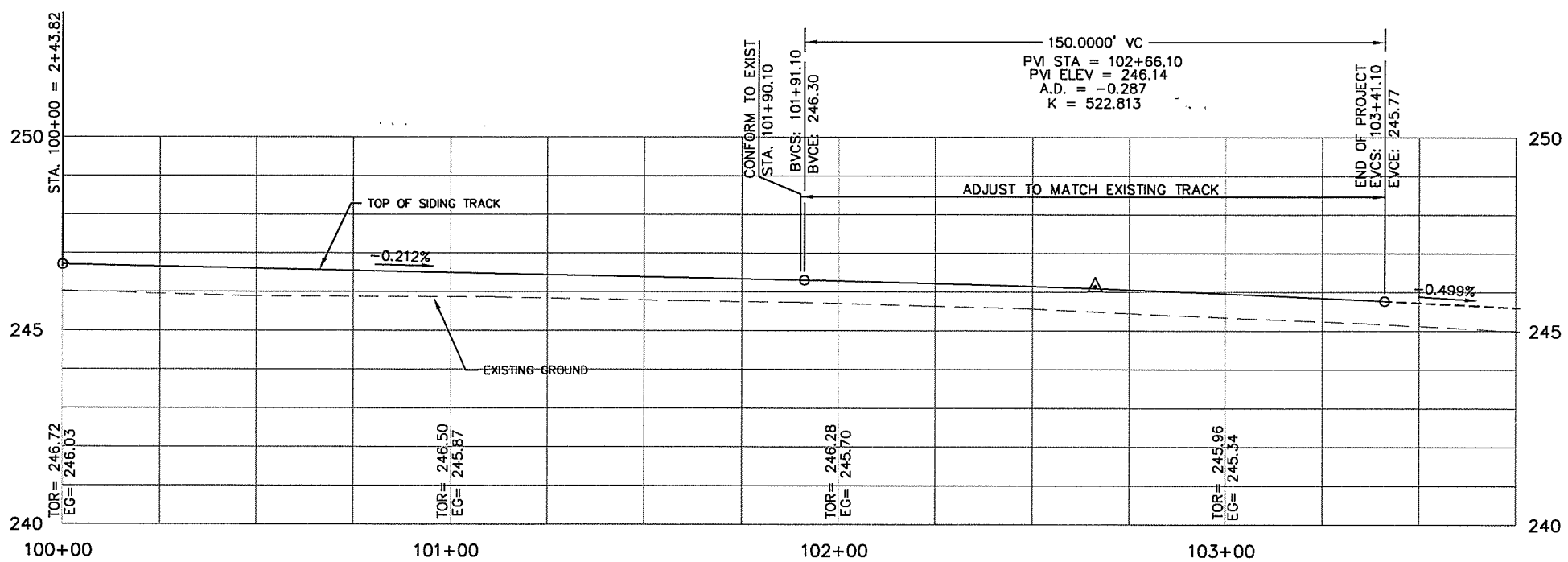

PROFILE SIDING TRACK

SCALE IN FEET
20 0 20 40

DESIGNED	KC
DRAWN	JC
CRP	180257
HOR.	1"=20'
VERT.	1"=2'
DATE	06/03/04
DWG:	L-2
SHEET 2	OF 6

CALL 48 HOURS BEFORE YOU DIG
1-800-553-4344
"It's the Law"
NORTHWEST UTILITIES NOTIFICATION CENTER

MICHAEL M. EBRIGHT
STATE OF WASHINGTON
PROFESSIONAL ENGINEER
EXPIRES: MAY 26, 2005

DESIGN & ENGINEERING DIVISION
DESIGN SECTION

NE 72ND AVENUE
PROFILES MAIN TRACK AND SIDING

proud past, promising future
CLARK COUNTY
WASHINGTON

N:\CIP\PROJECTS\310122-NE72Ave-H99toST.Johns\DESIGN\Consultants\CH2M Hill\rail-10-21-04\BD-L2.dwg, Layout1, 10/21/2004 4:04:19 PM, begleyk

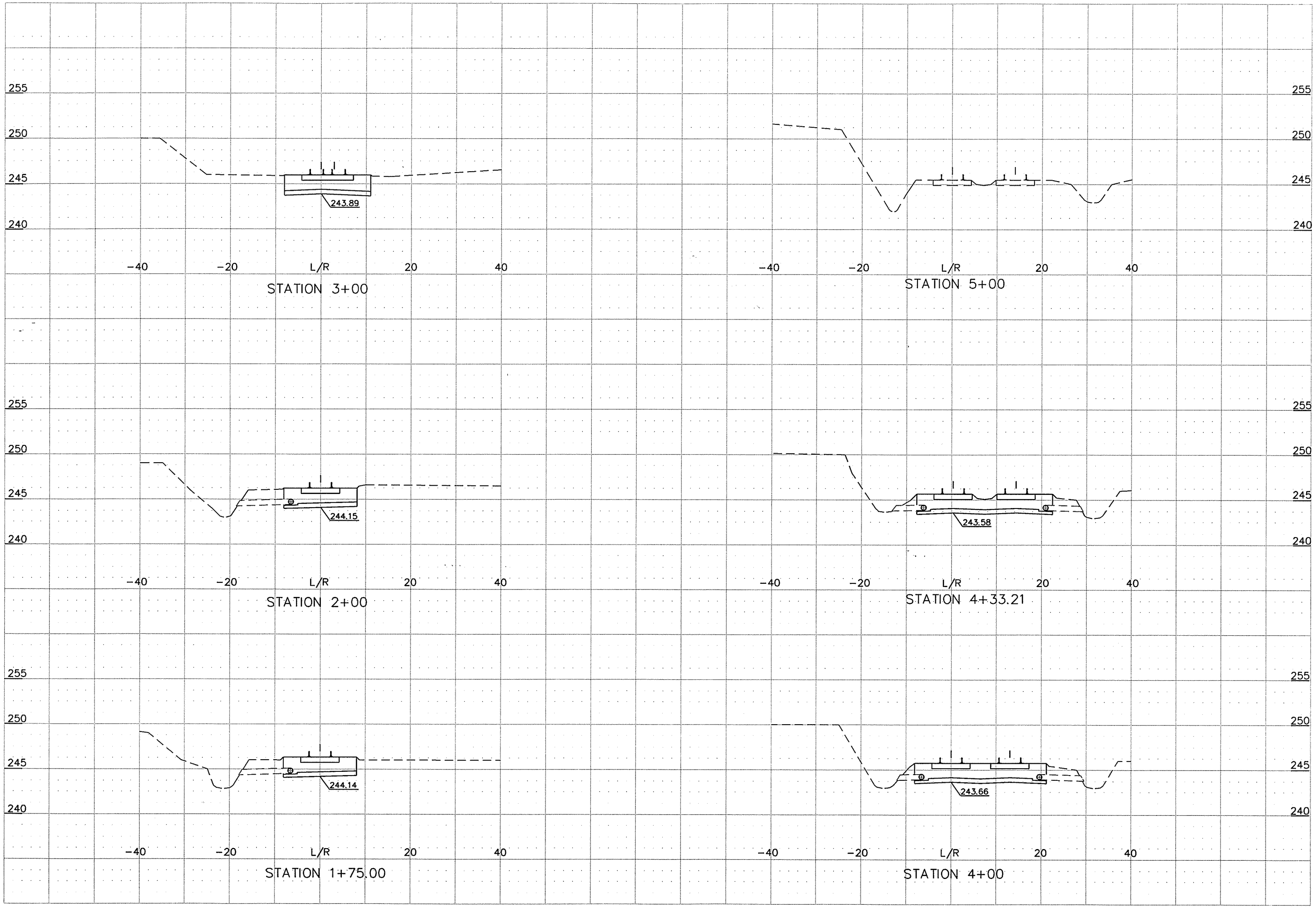

DESIGNED	KC
DRAWN	JC
CRP	180257
HOR.	1"=10'
VERT.	1"=5'
DATE	06/03/04
DWG:	L-3
SHEET 3	OF 6

CALL 48 HOURS BEFORE YOU DIG
1-800-553-4344
"It's the Law"
NORTHWEST UTILITIES NOTIFICATION CENTER

STATE OF WASHINGTON
MICHAEL M. ELDRICK
23600
PROFESSIONAL ENGINEER
EXPIRES MAY 28, 2005

DESIGN & ENGINEERING DIVISION
DESIGN SECTION

NE 72ND AVENUE
CROSS SECTIONS

proud past, promising future
CLARK COUNTY
WASHINGTON

N:\CIP\PROJECTS\310122-NE72Ave-H99toSTJohns\DESIGN\Consultants\CH2M Hillrail-10-21-04\BD-L3.dwg, Layout1, 10/21/2004 4:05:12 PM, bagleyk

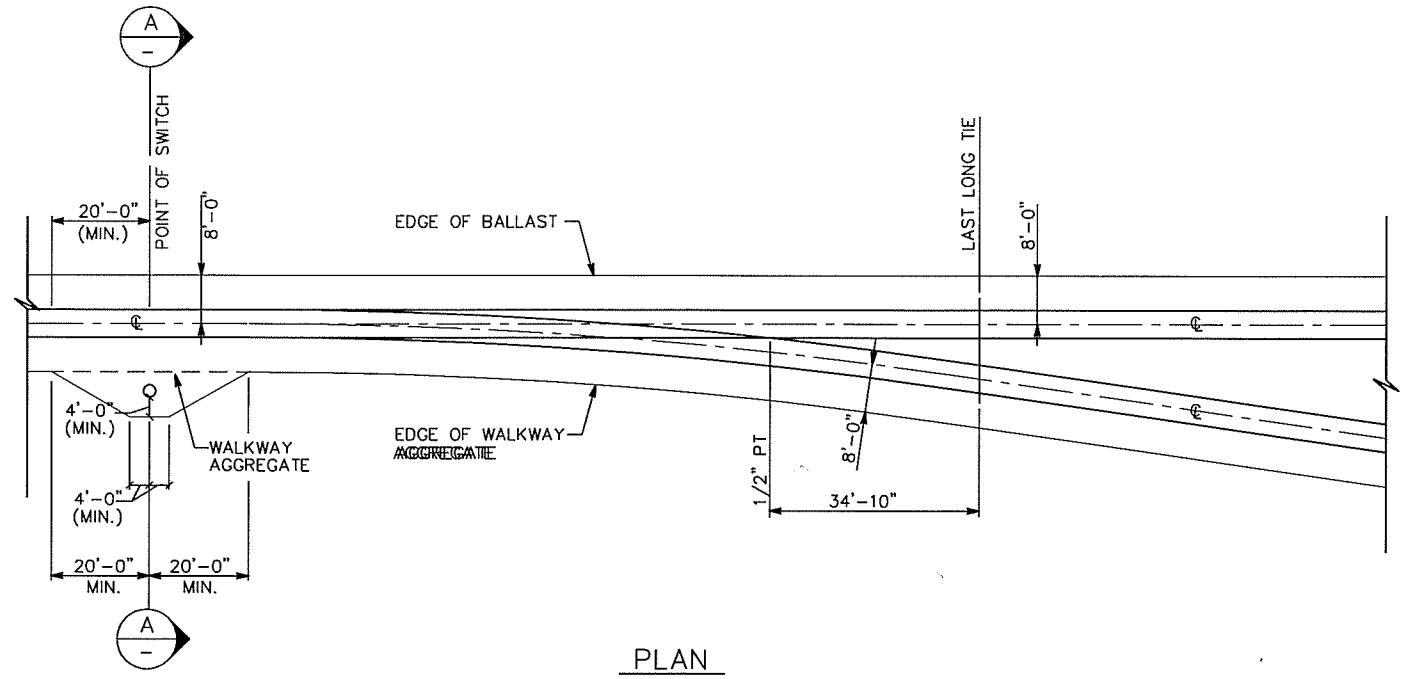

PLAN

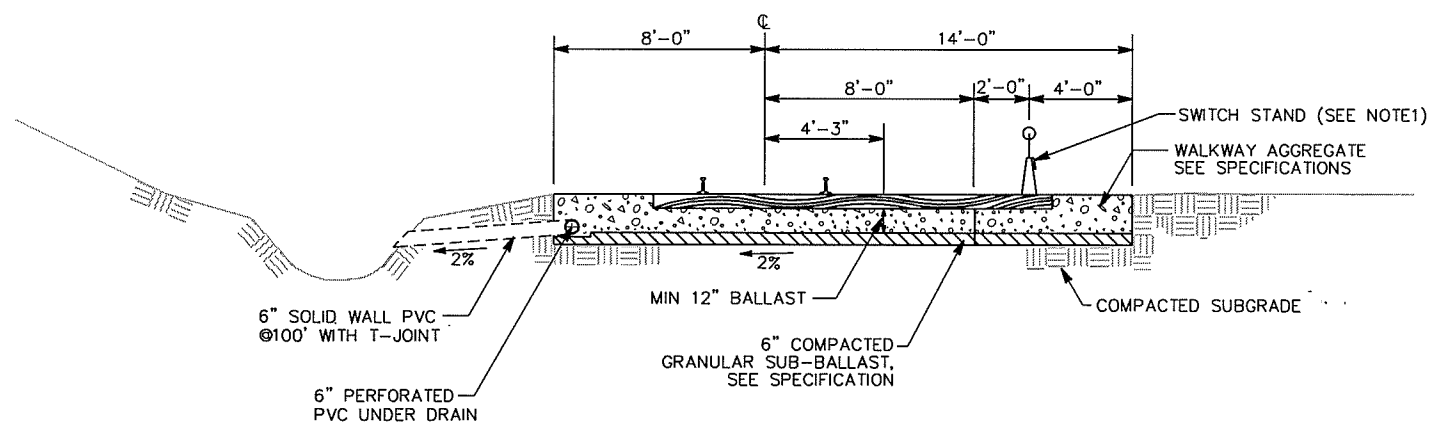

SECTION A-A

GRADING AND BALLAST
THROUGH TURNOUT DETAILS
NTS

NOTES

1. SWITCH STAND SHALL CONFORM TO BNSF STANDARD PLAN-DWG. NO. 2153 REV. NO. 8 OR LATER FOR RACOR STYLE 36E & 36EH RIGID SWITCH STAND WITH TRI-HANDLE AT 30° OR STRAIGHT.

DESIGNED	KC
DRAWN	JC
CRP	180257
HOR.	N.T.S
VERT.	
DATE	06/03/04
DWG:	L-4
SHEET 4	OF 6

CALL 48 HOURS BEFORE YOU DIG
1-800-553-4344
"It's the Law"
NORTHWEST UTILITIES NOTIFICATION CENTER

STATE OF WASHINGTON
MICHAEL M. EMRICK
22420
REGISTERED PROFESSIONAL ENGINEER
EXPIRES MAY 28, 2005

DESIGN & ENGINEERING DIVISION
DESIGN SECTION

NE 72ND AVENUE
CONSTRUCTION DETAILS

proud past, promising future
CLARK COUNTY
WASHINGTON

N:\CIP\PROJECTS\310122-NE72Ave-H99toST.Johns\DESIGN\Consultants\CH2M Hillrail-10-21-04\BD-L4.dwg, Layout1, 10/21/2004 4:06:08 PM, begleyk

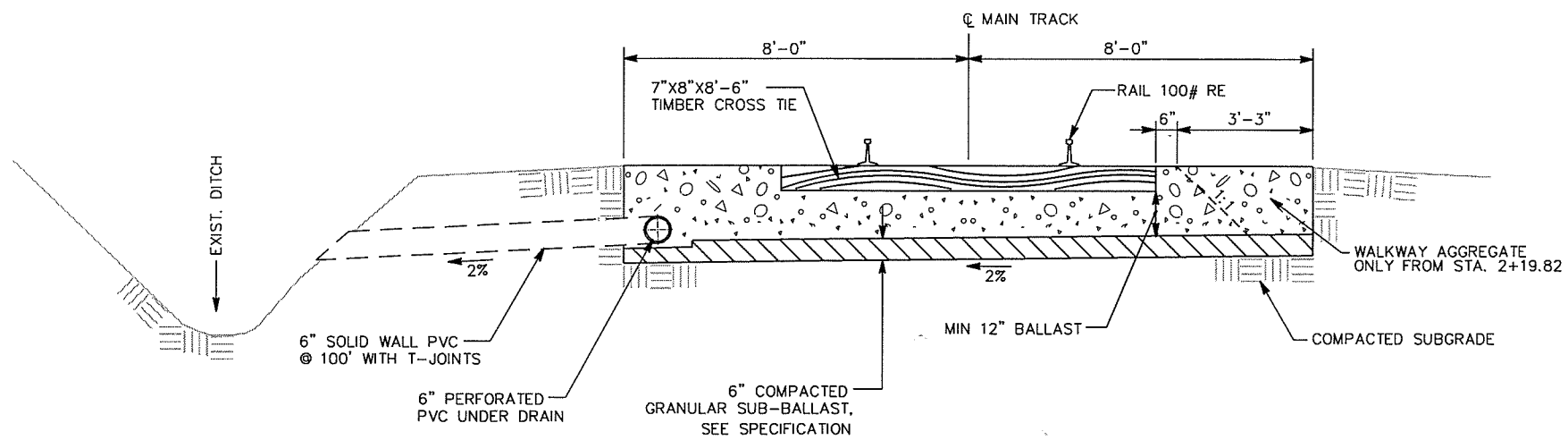

MAIN TRACK TYPICAL SECTION
STA. 1+75.00 TO 2+43.82
NTS

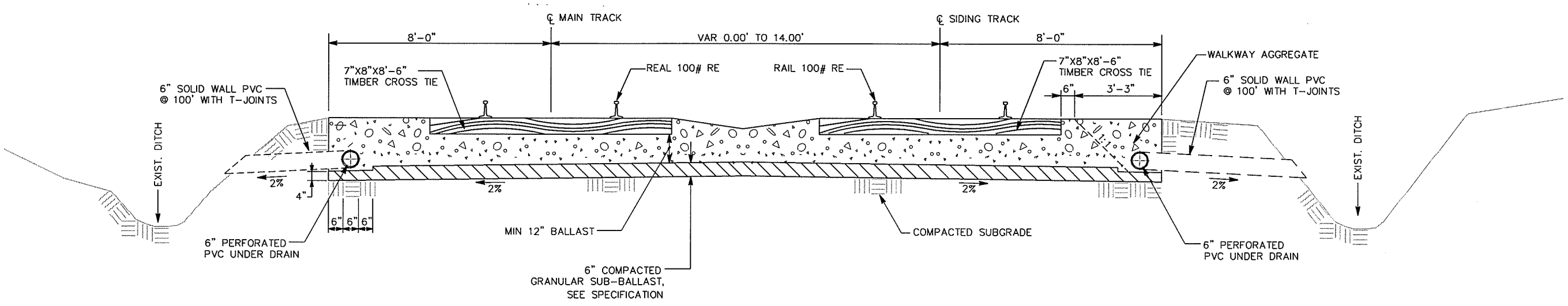

SIDING TRACK TYPICAL SECTION
STA. 2+43.82 TO 4+33.21
NTS

DESIGNED	KC
DRAWN	JC
CRP	180257
HOR.	N.T.S
VERT.	
DATE	06/03/04
DWG:	L-5
SHEET 5	OF 6

CALL 48 HOURS BEFORE YOU DIG
1-800-553-4344
"It's the Law"
NORTHWEST UTILITIES NOTIFICATION CENTER

STATE OF WASHINGTON
MICHAEL W. EDRICK
29030
REGISTERED PROFESSIONAL ENGINEER
EXPIRES: MAY 26, 2005

DESIGN & ENGINEERING DIVISION
DESIGN SECTION

NE 72ND AVENUE
TYPICAL SECTIONS

proud past, promising future
CLARK COUNTY
WASHINGTON

N:\CIP\PROJECTS\310122-NE72Ave-H99toST Johns\DESIGN\Consultants\CH2M Hill\rail-10-21-04\BD-L5.dwg, Layout1, 10/21/2004 4:06:53 PM, begleyk

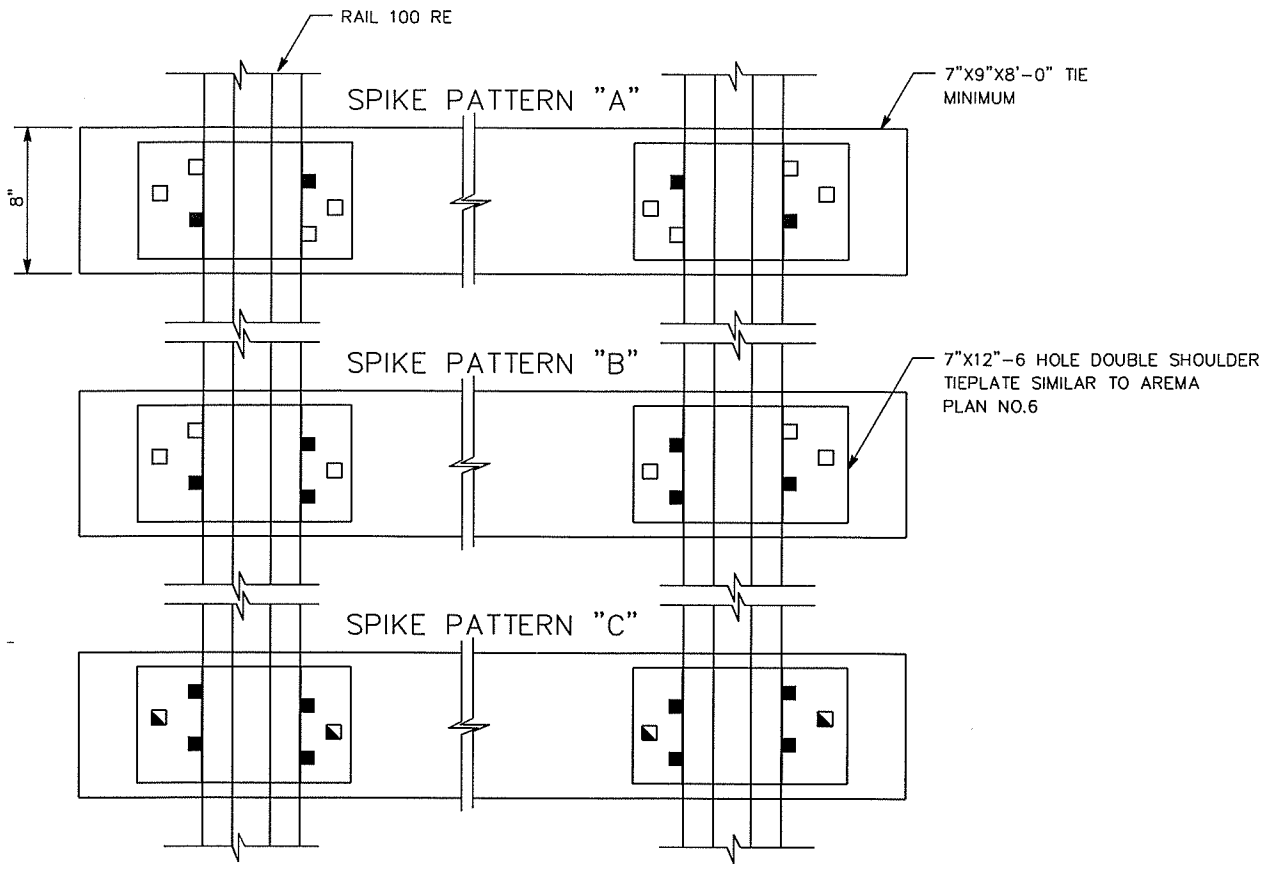

TRACK ALIGNMENT	SPIKES PER TIE PLATE	SPIKING PATTERN
TANGENTS AND CURVES LESS THAN 6 DEGREE	2	A
CURVES 6 DEGREE AND OVER BUT LESS THAN 12 DEGREE	3	B
GRADE CROSSING 9'-0" LONG TIES RAIL JOINT TO RAIL JOINT	6	C

■ TRACK SPIKE

◪ HOLD DOWN SPIKE

TRACK SPIKING PATTERNS

16 ANCHORS PER 39 FT. RAIL

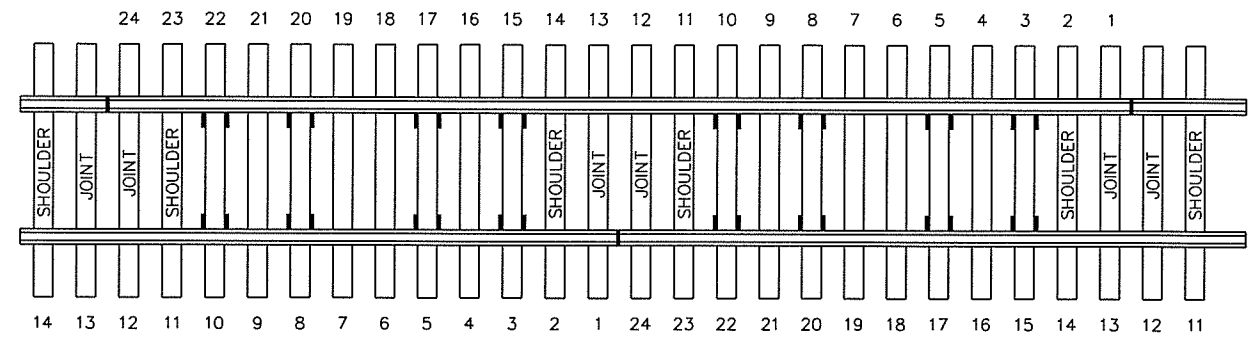

APPLICATION OF RAIL ANCHORS ON TANGENT & CURVE TRACK

NTS

NOTES:

1. RAIL ANCHORS MUST NOT BE PLACED AGAINST JOINT OR SHOULDER TIES
2. RAIL ANCHORS SHALL BE DRIVEN ON BASE OF RAIL UNTIL LOCKING NOTCH ENGAGES EDGE OF OPPOSITE FLANGE. ANCHORS MUST NOT BE DRIVEN ALONG THE RAIL: IF ADJUSTMENTS ARE NECESSARY, REMOVE AND REAPPLY.

DESIGNED	KC
DRAWN	JC
CRP	180257
HOR.	N.T.S
VERT.	
DATE	06/03/04
DWG:	L-6
SHEET 6	OF 6

CALL 48 HOURS BEFORE YOU DIG 1-800-553-4344 "It's the Law" NORTHWEST UTILITIES NOTIFICATION CENTER

MICHAEL M. EMRICK STATE OF WASHINGTON REGISTERED PROFESSIONAL ENGINEER EXPIRES MAY 26, 2005

DESIGN & ENGINEERING DIVISION
DESIGN SECTION

NE 72ND AVENUE
CONSTRUCTION DETAILS

proud past, promising future
CLARK COUNTY WASHINGTON

N:\CIP\PROJECTS\310122-NE72Ave-H99toST Johns\DESIGN\Consultants\CH2M Hill\rail-10-21-04\BD-L6.dwg, Layout1, 10/21/2004 4:07:30 PM, begleyk

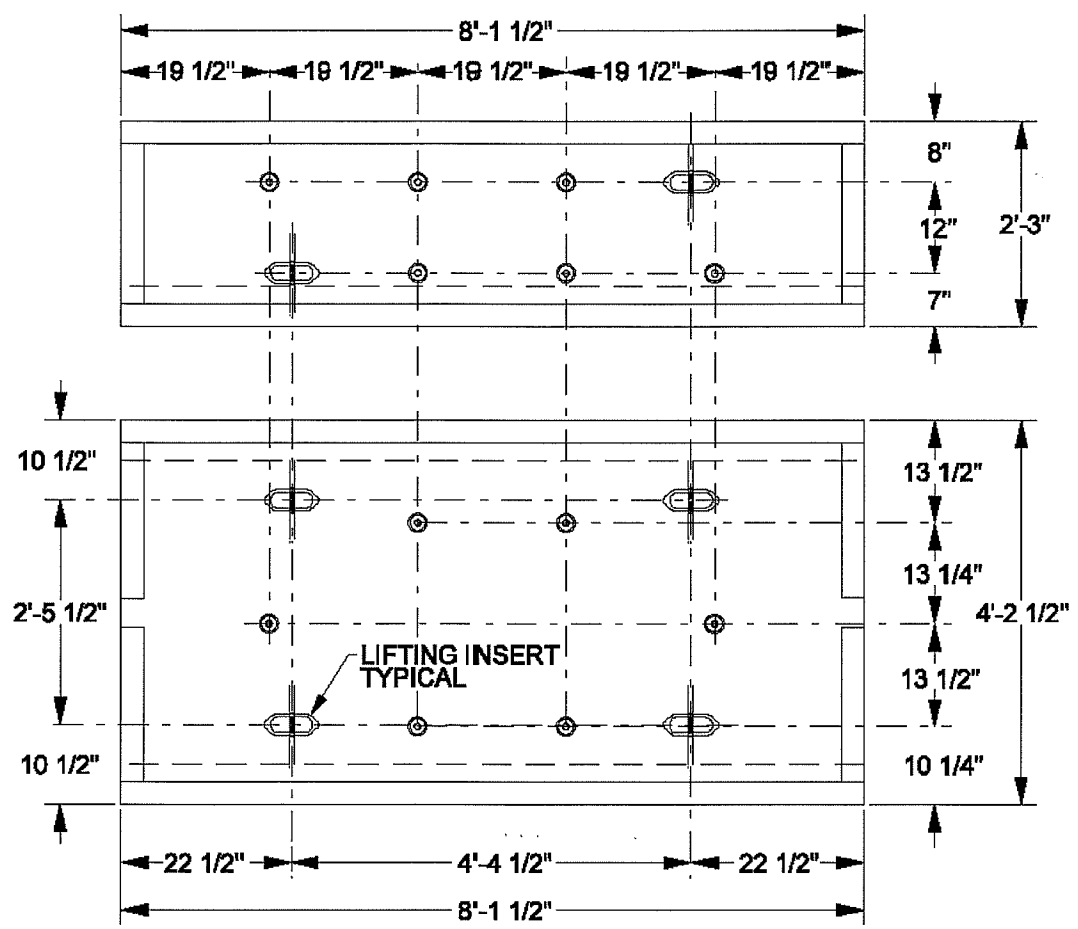

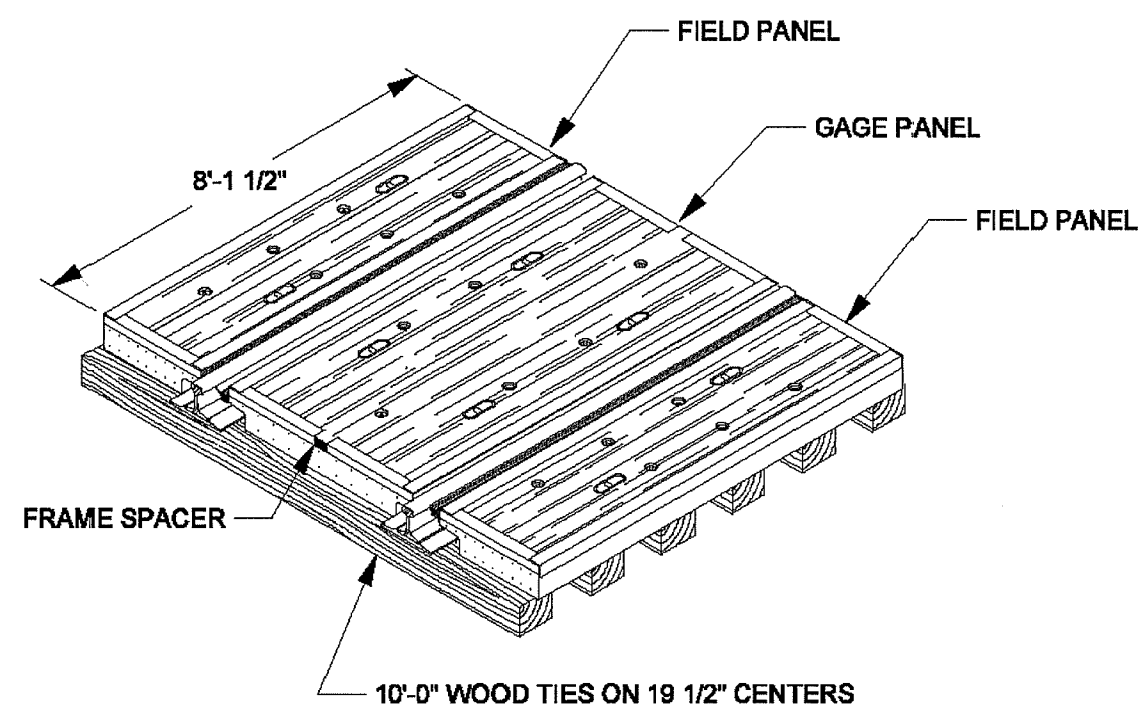

NOTES:
1/4" RUBBER INTERFACE PAD TO BE PLACED BETWEEN PANEL AND TIES FOR 141 LB. RAIL SECTION. PAD TO BE NAILED TO TIES,

CROSSING TYPE - 10W

RAIL SIZE	PANEL HEIGHT	GAGE PANEL WEIGHT	FIELD PANEL WEIGHT
115	7 1/8"	2850 LBS.	1550 LBS.
133-141	7 7/8"	3125 LBS.	1675 LBS.

ITEM NUMBERS			
133-141 LB. UPRR	133-141 LB. BNSF	115 LB. UPRR	115 LB. BNSF
540-1301	055590975	540-0202	055590973

COMMON STANDARDS

LAYOUT FOR CONCRETE PANELS ON 10'-0" LONG WOOD TIES (10W)

FILE OWNER: UPRR	DATE: APRIL 24, 2001
REV. NO.: 0	DWG NO: 200100

200100

DESIGNED	XX
DRAWN	BAK
CRP	310122
HOR.	NA
VERT.	NA
DATE	6/20/03
DWG:	RR1
SHEET	OF

CALL 48 HOURS BEFORE YOU DIG 1-800-553-4344 "It's the Law" NORTHWEST UTILITIES NOTIFICATION CENTER

DESIGN & ENGINEERING DIVISION
DESIGN SECTION

NE 72ND AVENUE
RAILROAD CROSSING STANDARD PLANS

proud past, promising future
CLARK COUNTY WASHINGTON

N:\CIP\PROJECTS\310122-NE72Ave-H99toST.Johns\DESIGN\DWGS\RR1-6.dwg, RR1, 8/6/2004 10:29:43 AM, begleyk

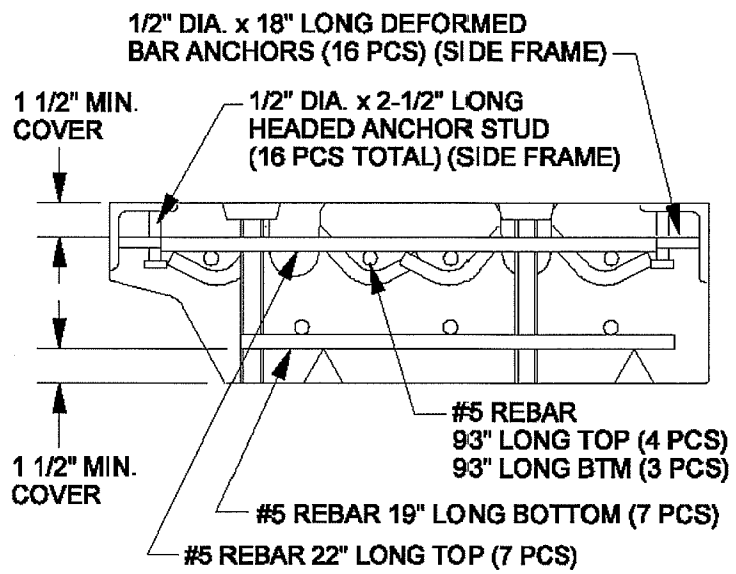

CROSS SECTION - FIELD PANEL

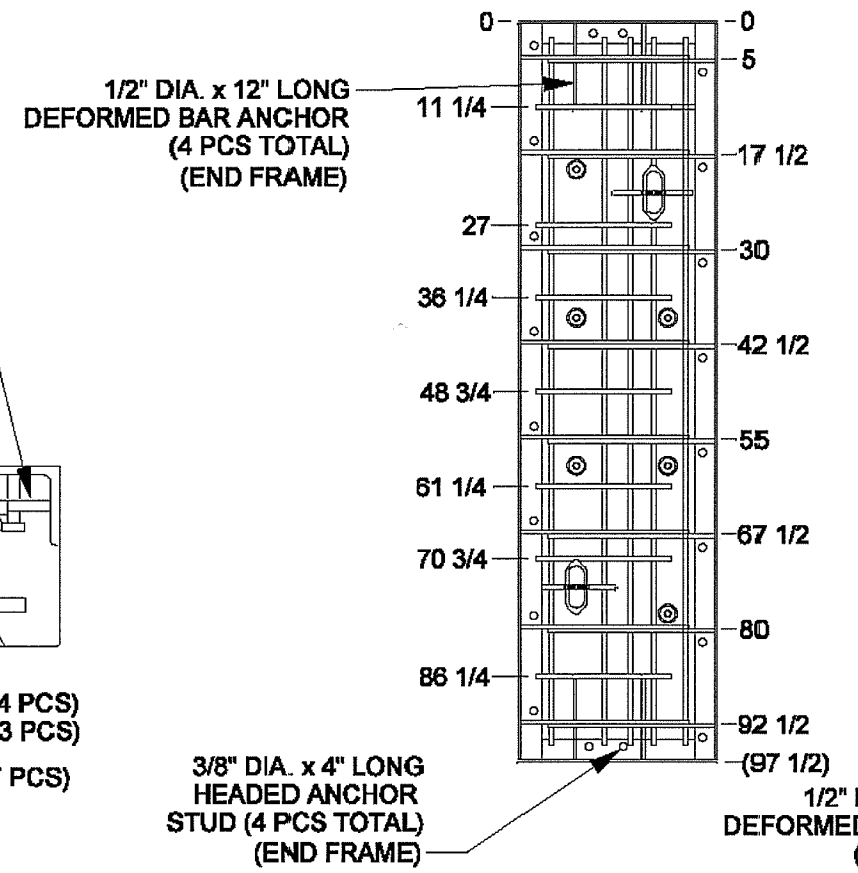

FIELD PANEL

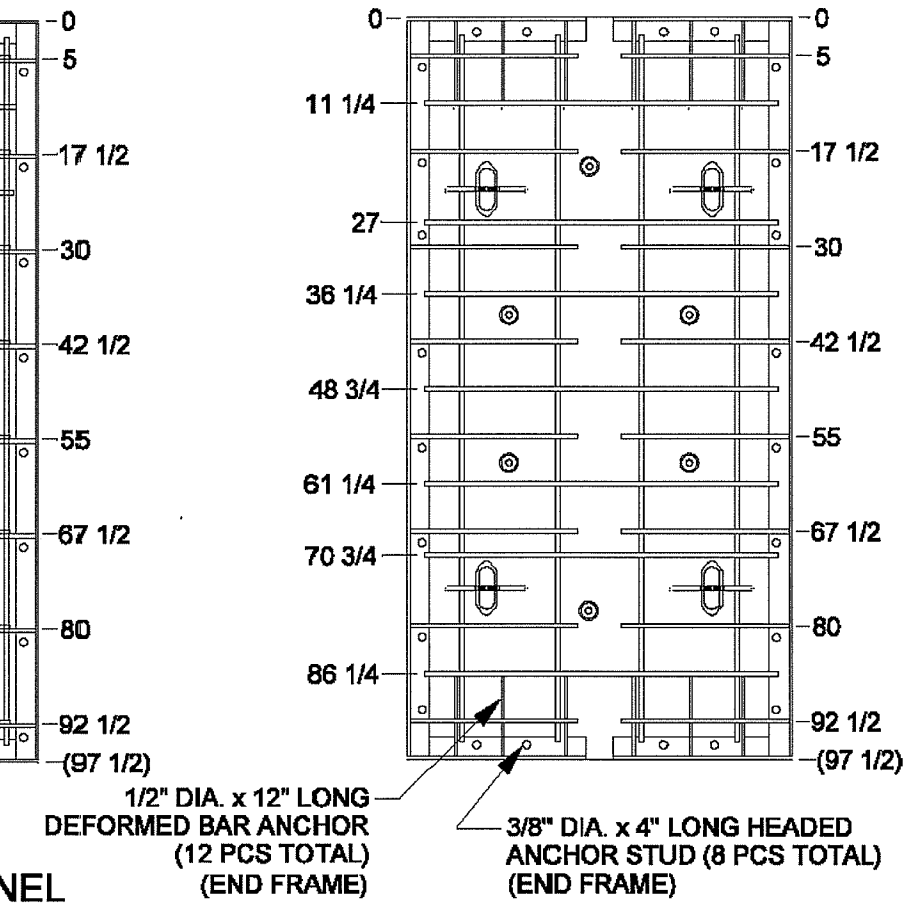

GAGE PANEL

NOTES:
CONCRETE COMPRESSIVE STRENGTH SHALL BE AS FOLLOWS:
@ 28DAYS = 6000 psi MINIMUM
@ SHIPMENT = 4000 psi MINIMUM
@ REMOVAL FROM FORMS = 2500 psi MINIMUM.

CROSSING TYPE - 10W

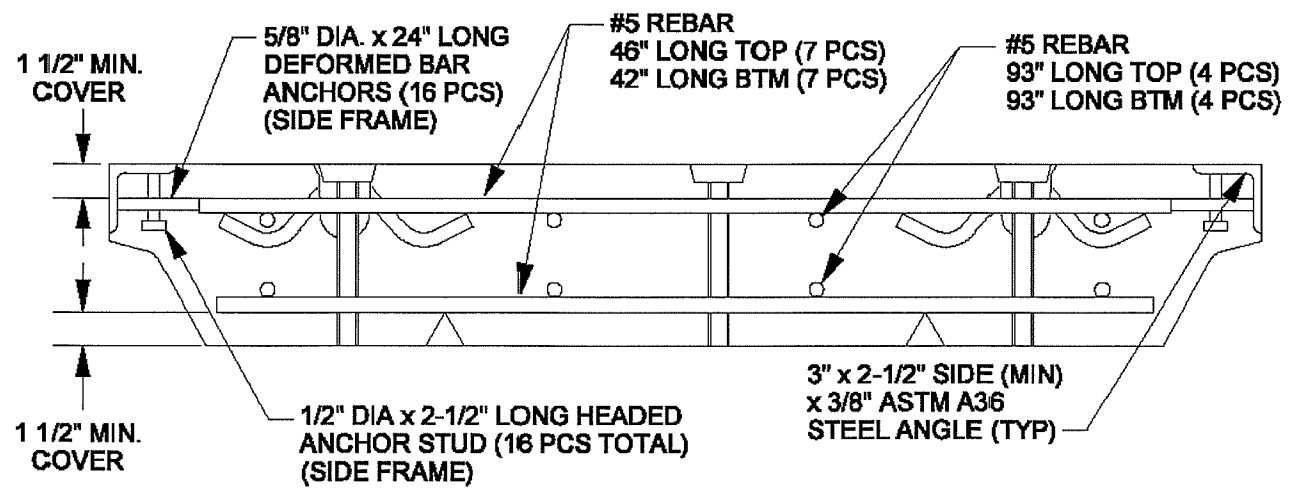

CROSS SECTION - GAGE PANEL

200102

COMMON STANDARDS

PRECAST CONCRETE PANELS FOR 10'-0" LONG WOOD TIES (10W)

FILE OWNER: UPRR	DATE: APRIL 24, 2001
REV. NO.: 0	DWG NO: 200102

DESIGNED XX
DRAWN BAK
CRP 310122
HOR. NA
VERT. NA
DATE 6/20/03
DWG: RR2
SHEET OF

CALL 48 HOURS BEFORE YOU DIG 1-800-553-4344 "It's the Law" NORTHWEST UTILITIES NOTIFICATION CENTER

DESIGN & ENGINEERING DIVISION
DESIGN SECTION

NE 72ND AVENUE RAILROAD CROSSING STANDARD PLANS

proud past, promising future
CLARK COUNTY WASHINGTON

N:\CIP\PROJECTS\310122-NE72Ave-H99toST Johns\DESIGN\DWGS\RR1-6.dwg, RR2, 8/6/2004 10:30:04 AM, begleyk

200901

MATERIAL SPECIFICATIONS:

1) STRUCTURAL STEEL SHALL CONFORM TO ASTM A-36 SPECIFICATIONS. WELDING TO BE PER AWS CODE.

2) ALL EXPOSED STEEL TO RECEIVE ONE COAT PRIMER.

3) END ANGLES FOR GAGE PANEL SHOULD HAVE 3" GAP MINIMUM TO IMPROVE SHUNT RESISTANCE. REINFORCING MATERIAL AND CLADDING TO BE CONSTRUCTED TO MEET SHUNTING REQUIREMENT. A NON-CONDUCTIVE SPACER TO BE ATTACHED TO GAGE FRAME.

4) CLADDING ON ENDS OF PANELS SHOULD EXTEND BEYOND CONCRETE +1/8", -0" TO IMPROVE MATCH WITH ADJACENT PANELS.

5) REINFORCING STEEL SHALL CONFORM TO CURRENT ASTM A615 SPECIFICATION, GRADE 60. IF ANY WELDING OF REINFORCEMENT STEEL IS REQUIRED, MATERIAL SHALL CONFORM TO ASTM A706 SPECIFICATION, GRADE 60.

6) CONCRETE MATERIAL MIXING, PLACING AND CURING TO BE IN ACCORDANCE WITH PCI "MANUAL FOR QUALITY CONTROL: PRECAST AND PRESTRESSED CONCRETE." MANUAL 115, EDITION 4. CEMENT SHALL HAVE NO MORE THAN 0.6% TOTAL ALKALI CONTENT. MAXIMUM WATER/CEMENT RATIO=0.44 (BY WEIGHT). AIR ENTRAINMENT=6%+/- 1% IN PLASTIC CONCRETE. SLUMP 3" MAXIMUM.

7) COPIES OF THE CONCRETE DESIGN MIX TO BE SUBMITTED TO RAILROADS FOR APPROVAL PRIOR TO THE START OF THE CASTING OPERATION.

8) TOP SURFACE SHALL BE NON-CRACK DESIGN AND IS TO BE SEALED TO PREVENT ION MIGRATION DUE TO SALTING.

9) CURING SHALL FOLLOW THE RECOMMENDATIONS AND PROCEDURES OF PCI IN 4TH EDITION DIVISION 4.

10) 3/16" WEEP/INSPECTION HOLES SHALL BE PLACED EVERY 2-FT. MIN. ALONG THE TOP OF THE STEEL FRAME ALONG A LINE 3/4" FROM OUTSIDE EDGE.

11) FLANGEWAY FILLER TO BE PERMANENTLY PREATTACHED AND HAVE THE FOLLOWING PROPERTIES:

* TENSILE STRENGTH (ASTM D412) 850PSI MIN.
* ULTIMATE ELONGATION (ASTM D412) 400% MIN.
* TEAR STRENGTH (ASTM D624) AT 25 DEGREES CELSIUS, 150-PLI MIN.
* HARDNESS (ASTM D2240) 75+/-5% SHORE A.
* COMPRESSION SET (ASTM 395 METHOD B) 100 DEGREES CELSIUS FOR 70 HOURS 45% MAX.
* ACCELERATED AGING TEST (ASTM D573) 70 HOURS AT 100 DEGREES CELSIUS MUST NOT EXHIBIT A REDUCTION IN PROPERTIES BY GREATER THAN 20%.
* OZONE RESISTANCE TEST (ASTM D518) MUST HAVE NO CRACKING AFTER EXPOSURE TO 50-PPHM OZONE FOR 96 HOURS AT 40 DEGREES CELSIUS.
* VOLUME RESISTIVITY = $1X10^{12}$ (OHM-CM) OR GREATER (ASTM D257), BUT USING 18% NACL/WATER SOLUTION IN PLACE OF DISTILLED WATER FOR 168 HOURS AT 25 DEGREES CELSIUS AND TESTED AT 500 VDC.
* ELECTRICAL RESISTANCE: MINIMUM RESISTANCE 10 MEGA OMS MEASURED AT 500 VDC.
* LOW TEMPERATURE BRITTLENESS (ASTM D2137) AT -40 DEGREES CELSIUS.
* A SAMPLE SECTION OF THE FLANGEWAY MATERIAL SHALL BE PHYSICALLY TESTED BY APPLYING A LATERAL FORCE OF 10 LB/IN AT 50 DEGREES CELSIUS. THE MAXIMUM LATERAL DISPLACEMENT OF THE TEST IS NOT TO EXCEED 1/4" (CROSSING TYPE 10C ONLY). TEST RESULTS MUST BE SUBMITTED FOR RAILROAD APPROVAL.
* MANUFACTURER TO DESIGN THE PREATTACHED FLANGEWAY FILLER TO ALLOW FOR REMOVAL OF PANELS FOR MAINTENANCE WITHOUT DAMAGING THE FLANGEWAY FILLER OR ANY OTHER COMPONENTS DESIGNED TO HOLD IT TOGETHER..

TOLERANCES:

1) OUT OF SQUARE 3/16" (MEASURED ALONG THE DIAGONAL)

2) LENGTH, WIDTH, AND THICKNESS: +/-1/8"

3) THE BOTTOM SURFACE, WHICH WILL BE IN CONTACT WITH THE TIES, SHALL NOT UNDULATE IN ANY DIRECTION MORE THAN 3/32". SEE SPECIAL TESTING NOTE 3 BELOW.

4) REINFORCEMENT PLACEMENT SHALL BE +/-3/4" HORIZONTAL, +/-1/8" VERTICAL.

FINISH:

1) ALL RECESSES AND MINOR CONCRETE SPALLS ARE TO BE FILLED AND FINISHED TO THE PANEL DIMENTIONS USING THE PROPER BONDING AGENT AND REPAIR MATERIAL SURFACE OF THE REPAIRED AREA IS TO MATCH THE COLOR AND TEXTURE OF THE SURROUNDING AREAS.

2) THE DRIVING SURFACE IS TO HAVE A LIGHT BROOM FINISH OR AS APPROVED BY RAILROADS. THE ADDITION OF WATER TO THE CONCRETE SURFACE FINISH DURING CASTING IS NOT PERMITTED.

SPECIAL TESTING:

1) TWICE ANNUALY, VENDORS SHALL SUBMIT (VIA AN INDEPENDENT TESTING LABORATORY TO THE RAILROADS) THE FOLLOWING TEST ON THE APPROVED MIXED DESIGN
   * ASTM C666 FREEZE/THAW
   * ASTM C227 MORTAR BAR METHOD
   * ASTM.C1260 AT TOTAL ALKALI BURDEN = 0.06%

2) GAGE PANELS SHALL BE DESIGNED WITH SHUNT RESISTANT FEATURES IN ORDER TO PROVIDE A MINIMUM ELECTRICAL RESISTANCE IN ACCORDANCE WITH THE STANDARD ELECTRICAL TEST (DWG 500930).

3) A REPRESENTATIVE SAMPLE OF PANELS SHALL BE CHECKED PERIODICALLY FOR BOTTOM FLATNESS BY USING A STRAIGHT EDGE CALIBRATED TO WITHIN +/-1/32" AND A TAPER GAGE AS FOLLOWS:
   8 POSITIONS OF FLATBAR (—) CHECK FLATNESS AT EACH POSITION USING TAPER GAGE.

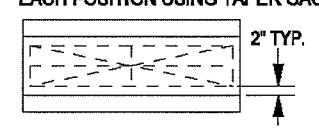

GENERAL:

1) THE MANUFACTURER SHALL BE ISO 9000 OR AAR M-1003 CERTIFIED. ALL TESTING PERSONNEL SHALL BE A MINIMUM OF ACI LEVEL I CERTIFIED.

2) THE FABRICATOR SHALL BE RESPONSIBLE FOR LOADING AND PROPERLY SECURING ALL PRECASTCONCRETE MEMBERS FOR SHIPMENT.

3) THE MANUFACTURER SHALL WARRANTY PRODUCT FOR A MINIMUM OF TEN YEARS AGAINST DEFECTS IN MATERIALS AND WORKMANSHIP.

4) MAUNFACTURER TO PERMANENTLY MARK EACH PANEL WITH A CONCRETE IMPRINT FOR SIZE OF RAIL, WEIGHT OF PANEL, MANUFACTURER'S I.D., MONTH/DAY/YEAR OF MANUFACTURE, AND CROSSING TYPE. END OF EACH PANEL TO BE STENCILED PAINTED WITH SIZE OF RAIL, WEIGHT OF PANEL AND CROSSING TYPE.

COMMON STANDARDS

GENERAL SPECIFICATIONS FOR ROAD CROSSINGS WITH CONCRETE PANELS

FILE OWNER: UPRR	DATE: APRIL 24, 2001
REV. NO.: 0	DWG NO:200901

DESIGNED	XX
DRAWN	BAK
CRP	310122
HOR.	NA
VERT.	NA
DATE	6/20/03
DWG:	RR3
SHEET	OF

CALL 48 HOURS BEFORE YOU DIG 1-800-553-4344 "It's the Law" NORTHWEST UTILITIES NOTIFICATION CENTER

DESIGN & ENGINEERING DIVISION
DESIGN SECTION

NE 72ND AVENUE
RAILROAD CROSSING STANDARD PLANS

proud past, promising future
CLARK COUNTY WASHINGTON

N:\CIP\PROJECTS\310122-NE72Ave-H99toSTJohns\DESIGN\DWGS\RR1-6.dwg, RR3, 8/6/2004 10:30:51 AM, begleyk

200903

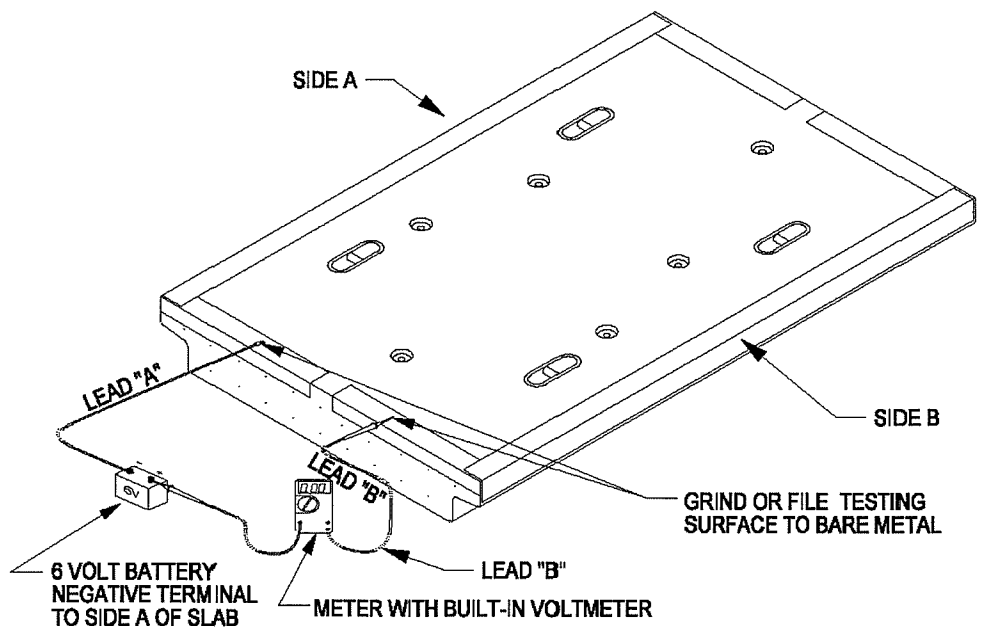

STANDARD ELECTRICAL TEST

ELECTRICAL TEST STEPS:

1. BATTERY SHALL BE 5.0 (FIVE) AMPS OR GREATER.
2. SLABS ARE READY FOR TESTING WHEN 72 HOURS HAVE ELAPSED FROM CASTINGOF CONCRETE.
3. MUST BE LESS THAN 2.0 (TWO) AMPS TO PASS THE TEST. RE-TEST AFTER TWO (2) DAYS IF GREATER THAN 2.0 (TWO) AMPS. REJECT IF AMPERAGE REMAINS ABOVE 2.0 (TWO) AMPS.
4. 0.3-0.4 AMPS IS A NORMAL READING. 2.0 (TWO) AMPS OR LESS PASS THE TEST.

COMMON STANDARDS

SHUNT RESISTANCE TEST FOR CONCRETE PANELS

FILE OWNER: UPRR	DATE: APRIL 24, 2001
REV. NO.: 0	DWG NO:200903

200902

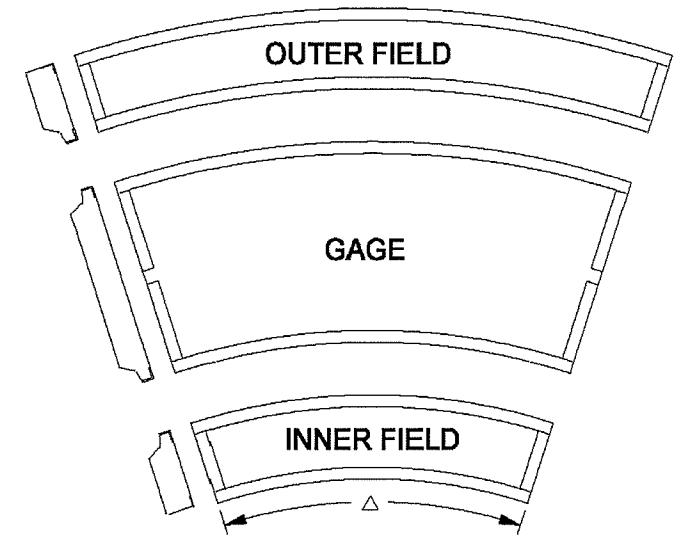

(SEE PANEL CURVATURE TABLES)

CURVATURE TABLE (ON CONCRETE TIES)

DEGREE OF CURVE	RADIUS IN FEET	Δ	CURVE PANEL?
2° OR LESS	2865'	0.20°	NO
3°	1910'	0.30°	YES
4°	1433'	0.40°	YES
5°	1146'	0.50°	YES
6°	955'	0.60°	YES
7°	819'	0.70°	YES
8°	717'	0.80°	YES
9°	637'	0.90°	YES
10°	574'	1.00°	YES
11°	522'	1.10°	YES
12°	478'	1.20°	YES
13°	442'	1.30°	YES
14°	410'	1.40°	YES

CURVATURE TABLE (ON WOOD TIES)

DEGREE OF CURVE	RADIUS IN FEET	Δ	CURVE PANEL?
3° OR LESS	1910'	0.24°	NO
4°	1433'	0.32°	YES
5°	1146'	0.40°	YES
6°	955'	0.48°	YES
7°	819'	0.56°	YES
8°	717'	0.66°	YES
9°	637'	0.74°	YES
10°	574'	0.82°	YES
11°	522'	0.90°	YES
12°	478'	0.98°	YES
13°	442'	1.06°	YES
14°	410'	1.14°	YES

NOTES:
A CURVED PANEL IS A PANEL THAT IS PIE SHAPED WITH A LONGER OUTER LENGTH THAN THE INNER LENGTH WITH TRUE RADIUSED OUTER AND INNER STEEL.

CURVED PANELS USE STANDARD REINFORCEMENT SIMILAR TO TANGENT PANEL STANDARD REINFORCEMENT.

LAG HOLES ON 10W AND 9W CROSSINGS MUST LINE UP WITH THE CENTERLINE OF TIES.

XING TYPE (RAIL WT.)	BNSF ITEM NO.	UPRR ITEM NO.
10W (115)	055590002	NON-STOCK
10W (133-141)	055590001	NON-STOCK
9W	NON-STOCK	NON-STOCK
10C	NON-STOCK	NON-STOCK
85C	NON-STOCK	NON-STOCK

COMMON STANDARDS

CURVED CONCRETE PANELS

FILE OWNER: UPRR	DATE: APRIL 24, 2001
REV. NO.: 0	DWG NO:200902

DESIGNED	XX
DRAWN	BAK
CRP	310122
HOR.	NA
VERT.	NA
DATE	6/20/03
DWG:	RR4
SHEET	OF

CALL 48 HOURS BEFORE YOU DIG 1-800-553-4344 "It's the Law" NORTHWEST UTILITIES NOTIFICATION CENTER

DESIGN & ENGINEERING DIVISION
DESIGN SECTION

NE 72ND AVENUE
RAILROAD CROSSING STANDARD PLANS

proud past, promising future
CLARK COUNTY WASHINGTON

N:\CIP\PROJECTS\310122-NE72Ave-H99toSTJohns\DESIGN\DWGS\RR1-6.dwg, RR4, 8/6/2004 10:31:17 AM, begleyk

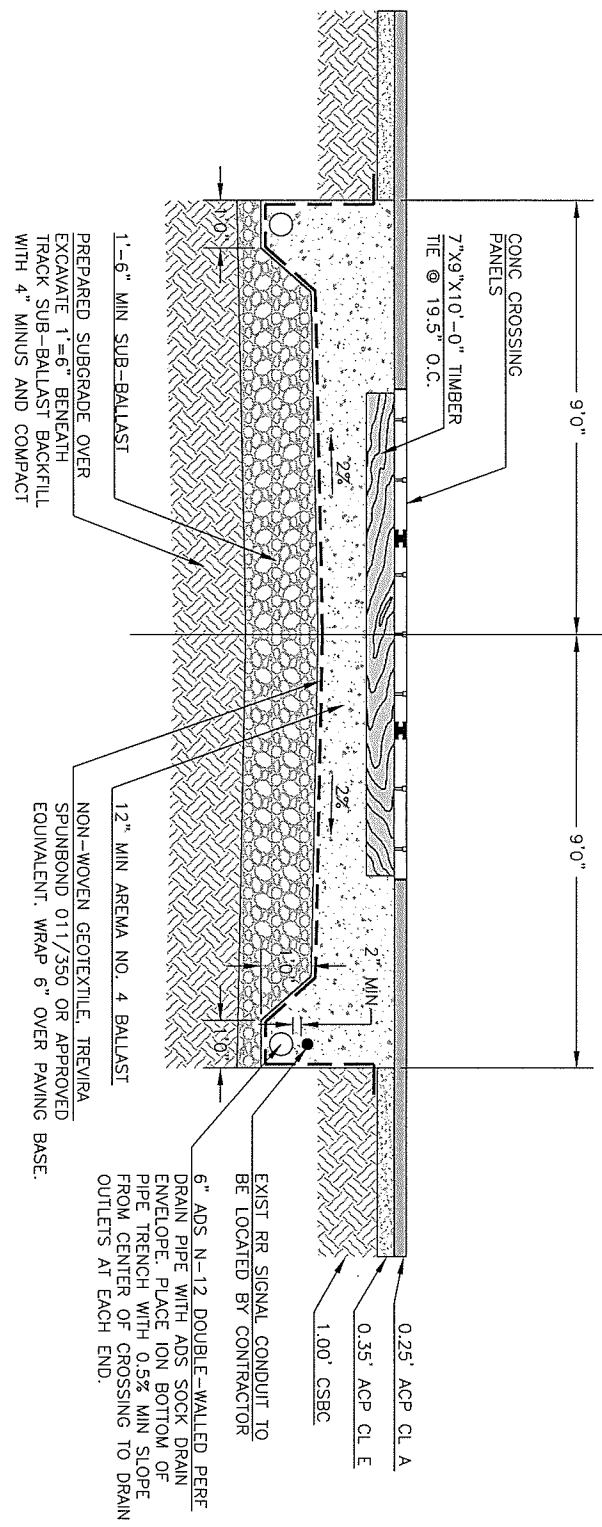

CROSSING DRAINAGE DETAIL

TYPICAL SECTION

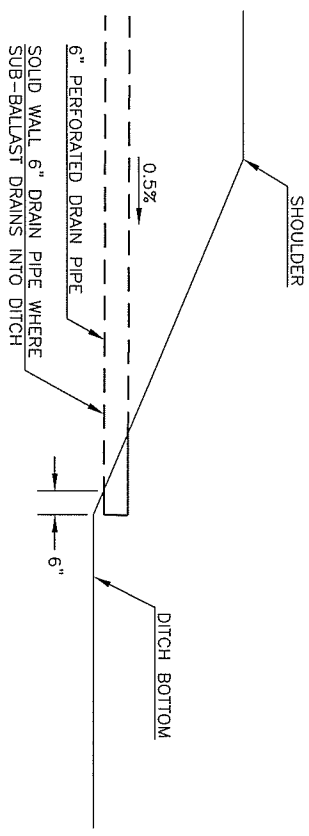

CROSSING DRAINAGE DETAIL

TYPICAL OUTFALL

CLARK COUNTY WASHINGTON

proud past, promising future

DESIGN & ENGINEERING DIVISION
DESIGN SECTION

NE 72ND AVENUE
RAILROAD TRACK DETAILS

CALL 48 HOURS BEFORE YOU DIG
1-800-553-4344
"It's the Law"
NORTHWEST UTILITIES NOTIFICATION CENTER

DESIGNED	ME
DRAWN	KB
CRP	310122
HOR.	NTS
VERT.	NTS
DATE	8/10/04
DWG:	RTD1
SHEET X	OF X

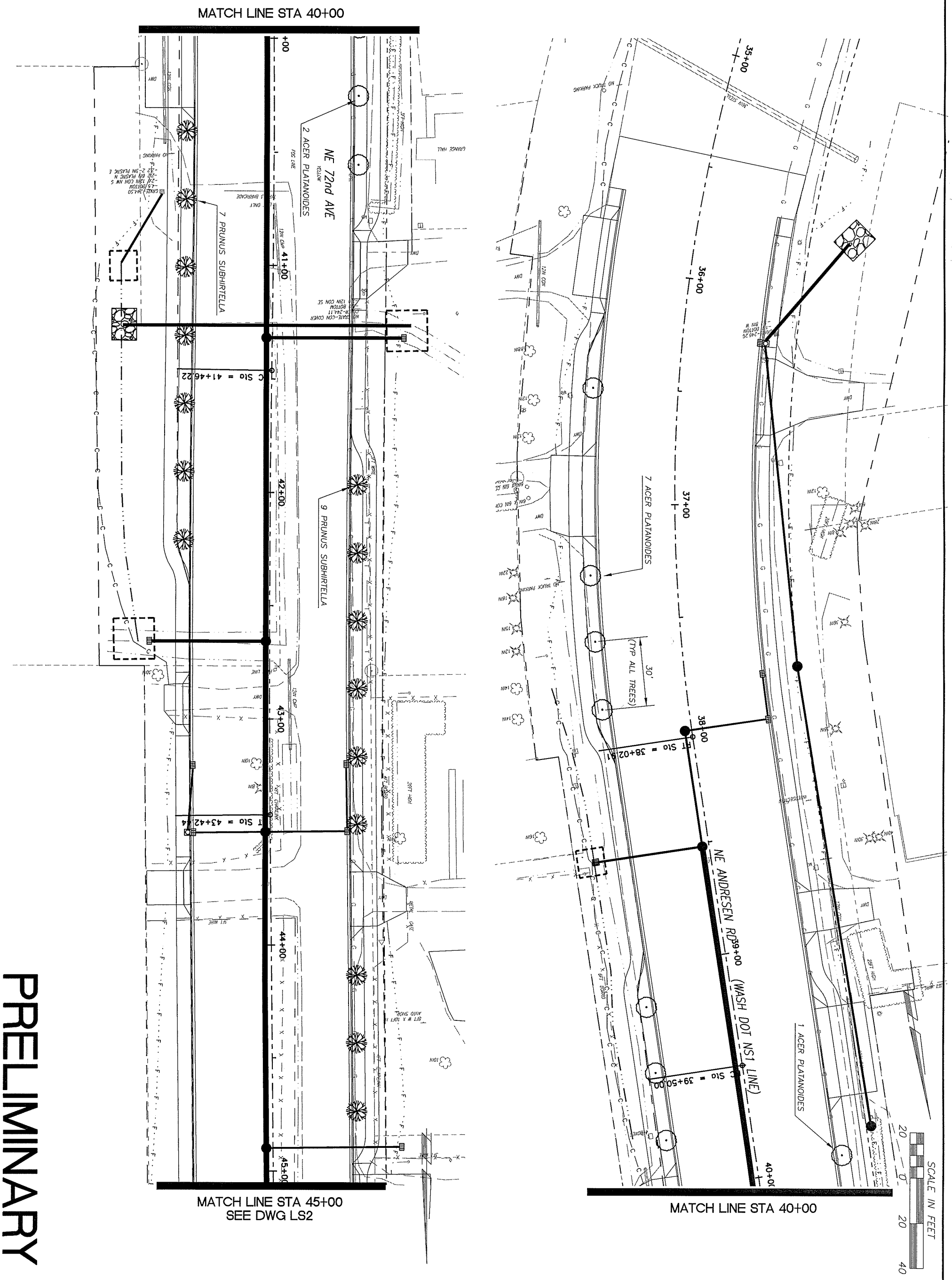

PRELIMINARY

proud past, promising future

CLARK COUNTY
WASHINGTON

DESIGN & ENGINEERING DIVISION
DESIGN SECTION

NE 72ND AVENUE
LANDSCAPE PLAN

MICHAEL M. EMRICK
STATE OF WASHINGTON
29030
REGISTERED
PROFESSIONAL ENGINEER
EXPIRES: MAY 26, 2005

CALL 48 HOURS BEFORE YOU DIG
1-800-553-4344
"It's the Law"
NORTHWEST UTILITIES NOTIFICATION CENTER

DESIGNED	ME
DRAWN	KB
CRP	310122
HOR.	1"=20'
VERT.	NA
DATE	8/5/04
DWG:	LS1
SHEET	OF

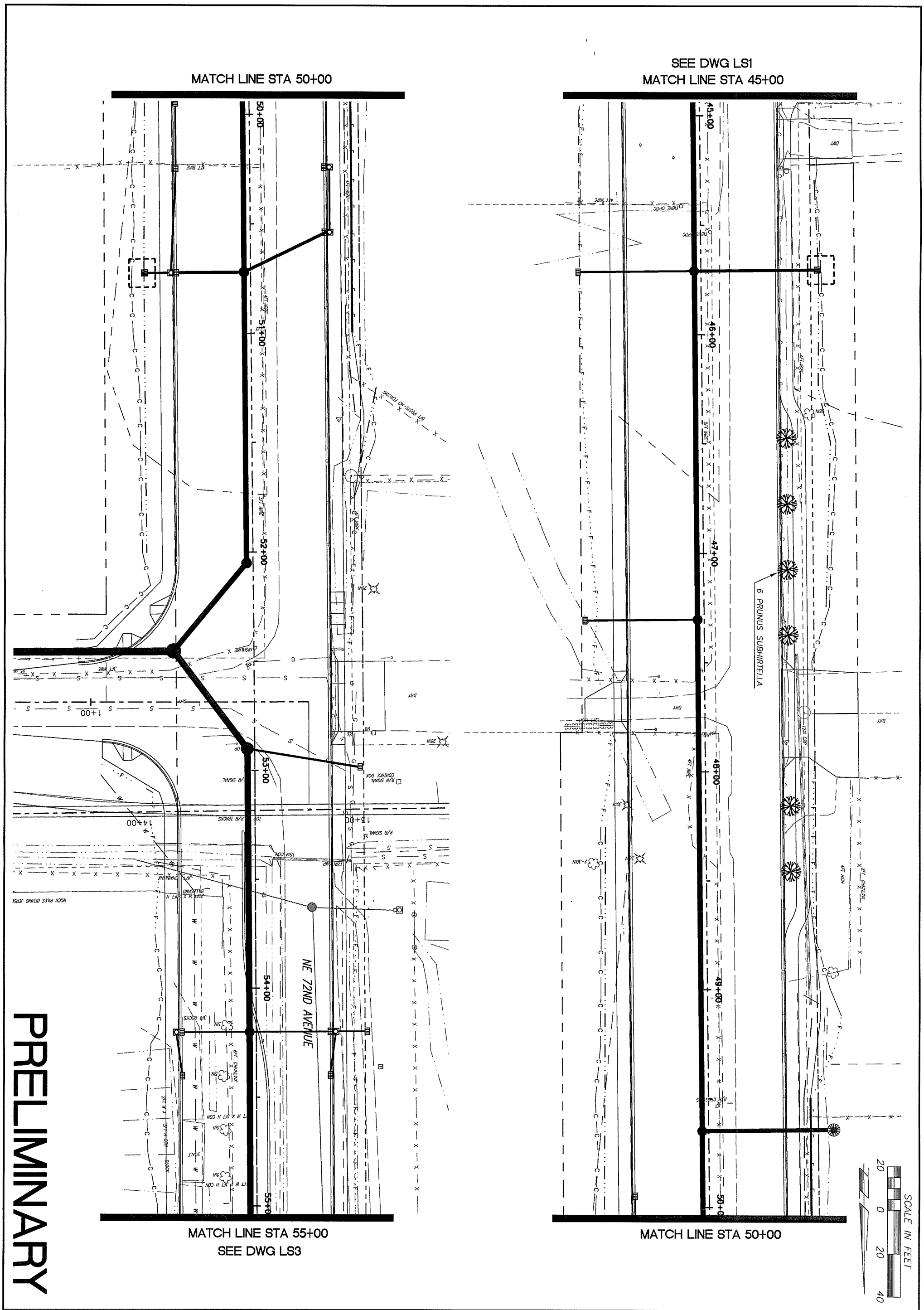

PRELIMINARY

proud past, promising future

CLARK COUNTY
WASHINGTON

DESIGN & ENGINEERING DIVISION
DESIGN SECTION

NE 72ND AVENUE
LANDSCAPE PLAN

MICHAEL M. ENRICK
STATE OF WASHINGTON
29030
REGISTERED
PROFESSIONAL ENGINEER
EXPIRES: MAY 26, 2005

CALL 48 HOURS BEFORE YOU DIG
1-800-553-4344
"It's the Law"
NORTHWEST UTILITIES NOTIFICATION CENTER

DESIGNED	ME
DRAWN	KB
CRP	310122
HOR.	1"=20'
VERT.	NA
DATE	8/5/04
DWG:	LS2
SHEET	OF

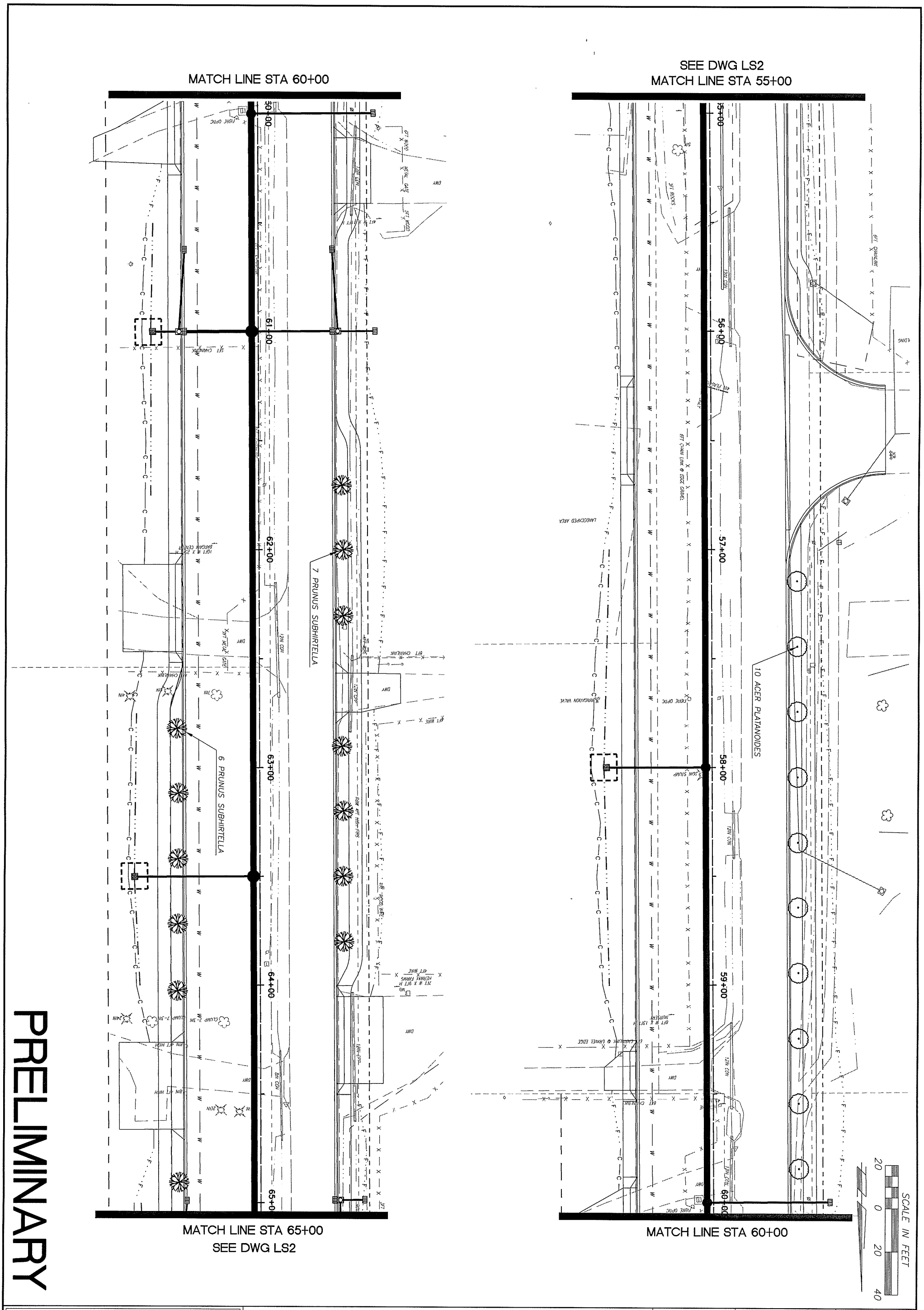

PRELIMINARY

proud past, promising future

CLARK COUNTY
WASHINGTON

DESIGN & ENGINEERING DIVISION
DESIGN SECTION

NE 72ND AVENUE
LANDSCAPE PLAN

MICHAEL M. EMRICK
STATE OF WASHINGTON
29030
REGISTERED
PROFESSIONAL ENGINEER
EXPIRES:MAY 26, 2005

CALL 48 HOURS BEFORE YOU DIG
1-800-553-4344
"It's the Law"
NORTHWEST UTILITIES NOTIFICATION CENTER

DESIGNED	ME
DRAWN	KB
CRP	310122
HOR.	1"=20'
VERT.	NA
DATE	8/5/04
DWG:	LS3
SHEET	OF

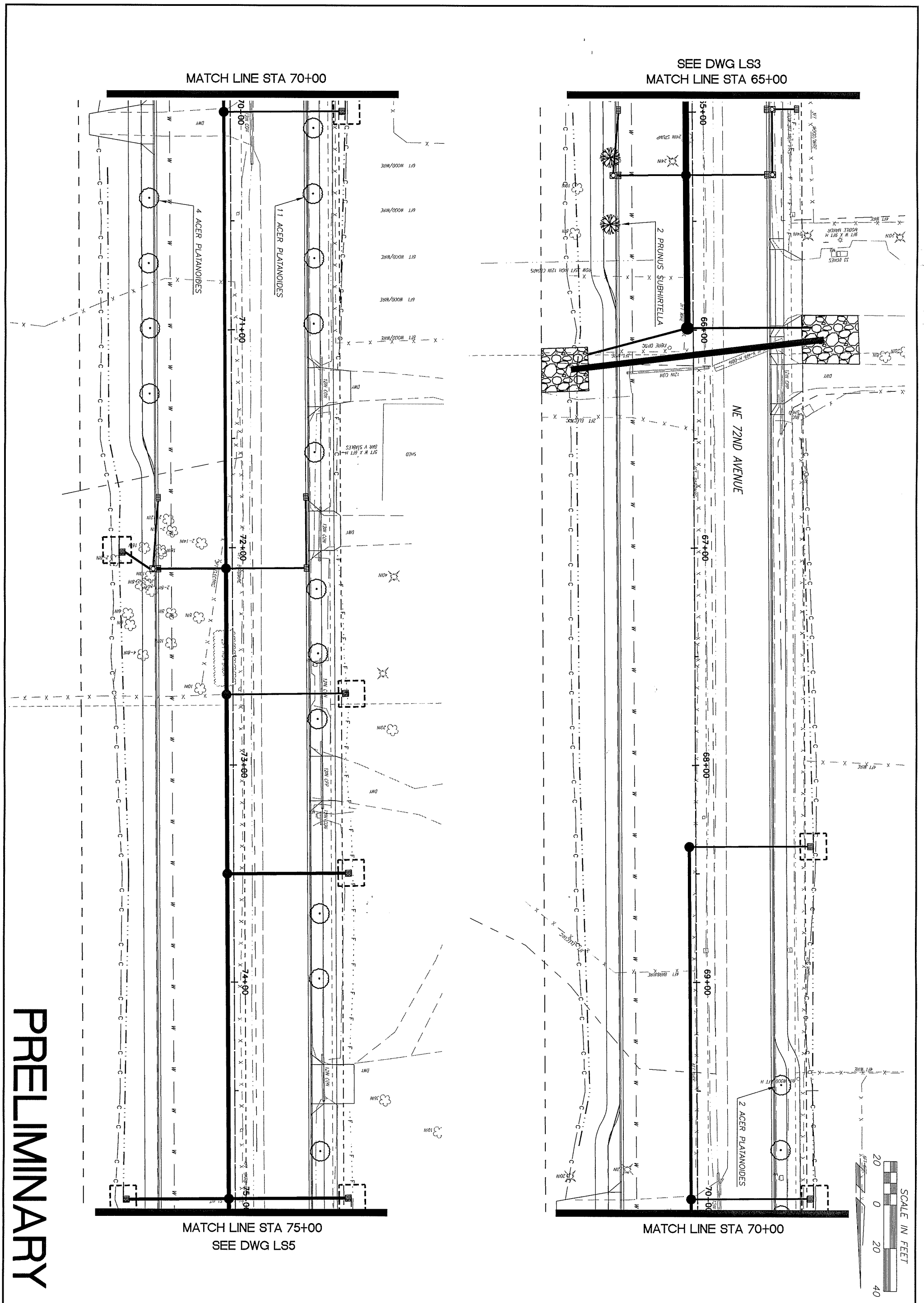

PRELIMINARY

proud past, promising future

CLARK COUNTY
WASHINGTON

DESIGN & ENGINEERING DIVISION
DESIGN SECTION

NE 72ND AVENUE
LANDSCAPE PLAN

MICHAEL M. ENRICK
STATE OF WASHINGTON
29030
REGISTERED
PROFESSIONAL ENGINEER
EXPIRES:MAY 26, 2005

CALL 48 HOURS BEFORE YOU DIG
1-800-553-4344
"It's the Law"
NORTHWEST UTILITIES NOTIFICATION CENTER

DESIGNED	ME
DRAWN	KB
CRP	310122
HOR.	1"=20'
VERT.	NA
DATE	8/5/04
DWG:	LS4
SHEET	OF

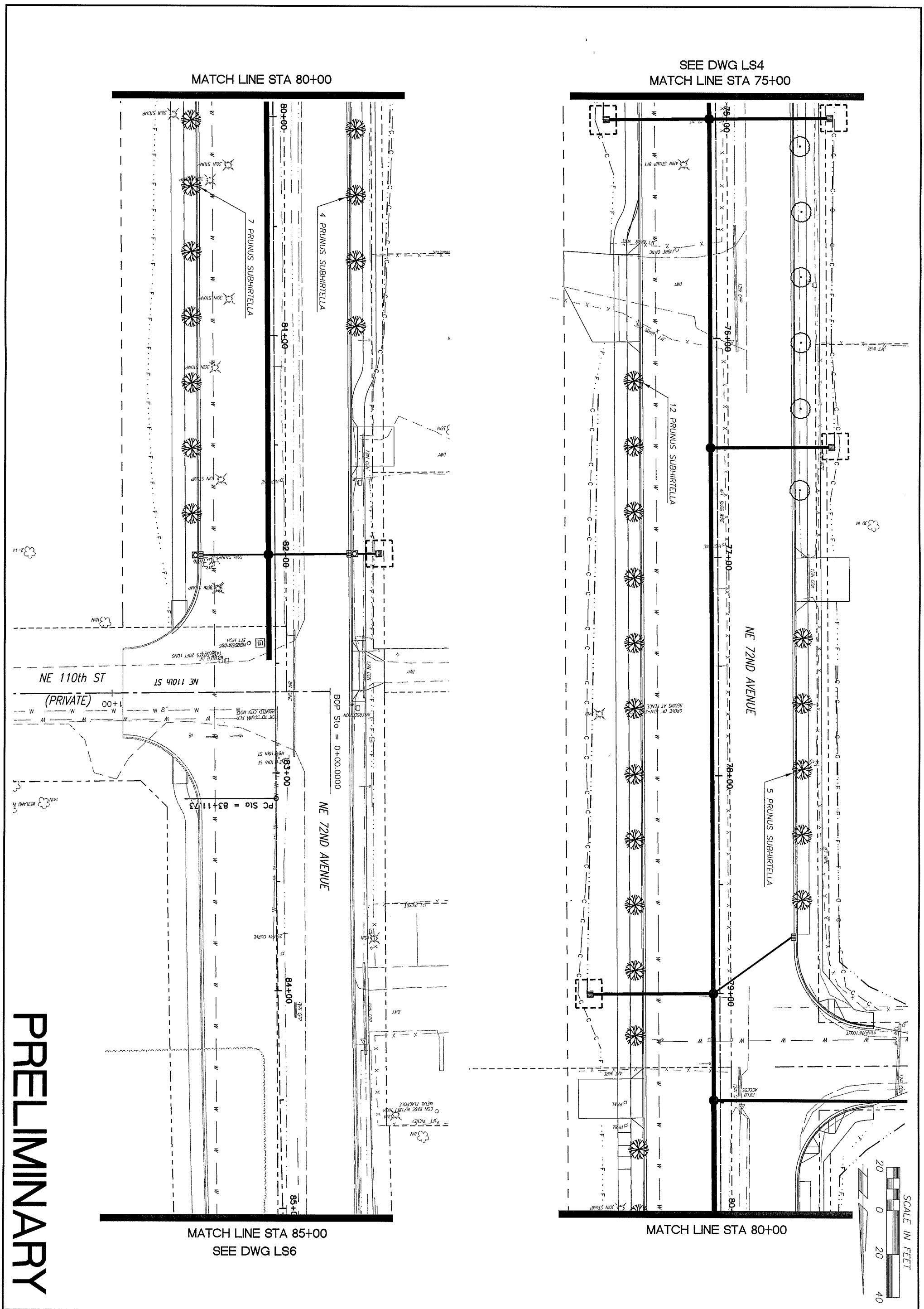

PRELIMINARY

proud past, promising future
CLARK COUNTY
WASHINGTON

DESIGN & ENGINEERING DIVISION
DESIGN SECTION

NE 72ND AVENUE
LANDSCAPE PLAN

MICHAEL M. EMRICK
STATE OF WASHINGTON
29030
REGISTERED
PROFESSIONAL ENGINEER
EXPIRES: MAY 26, 2005

CALL 48 HOURS BEFORE YOU DIG
1-800-553-4344
"It's the Law"
NORTHWEST UTILITIES NOTIFICATION CENTER

DESIGNED	ME
DRAWN	KB
CRP	310122
HOR.	1"=20'
VERT.	NA
DATE	8/5/04
DWG:	LS5
SHEET	OF