CAPITAL IMPROVEMENTS PROGRAM
COUNTY ROAD PROJECT #381022 & #320322

NW 119TH STREET/NE 117TH STREET

FROM NW 7TH AVENUE TO HWY 99

PLANS FOR THE CONSTRUCTION OF
ROADWAY, RETAINING WALLS, STORM DRAINAGE, AND SIGNALIZATION

VOLUME 2 OF 2

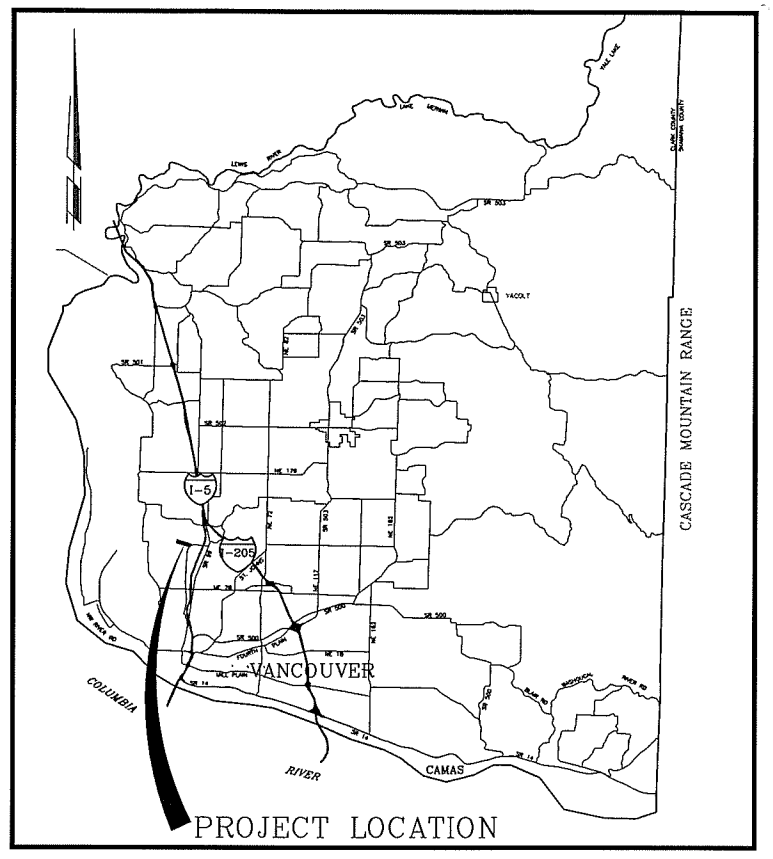

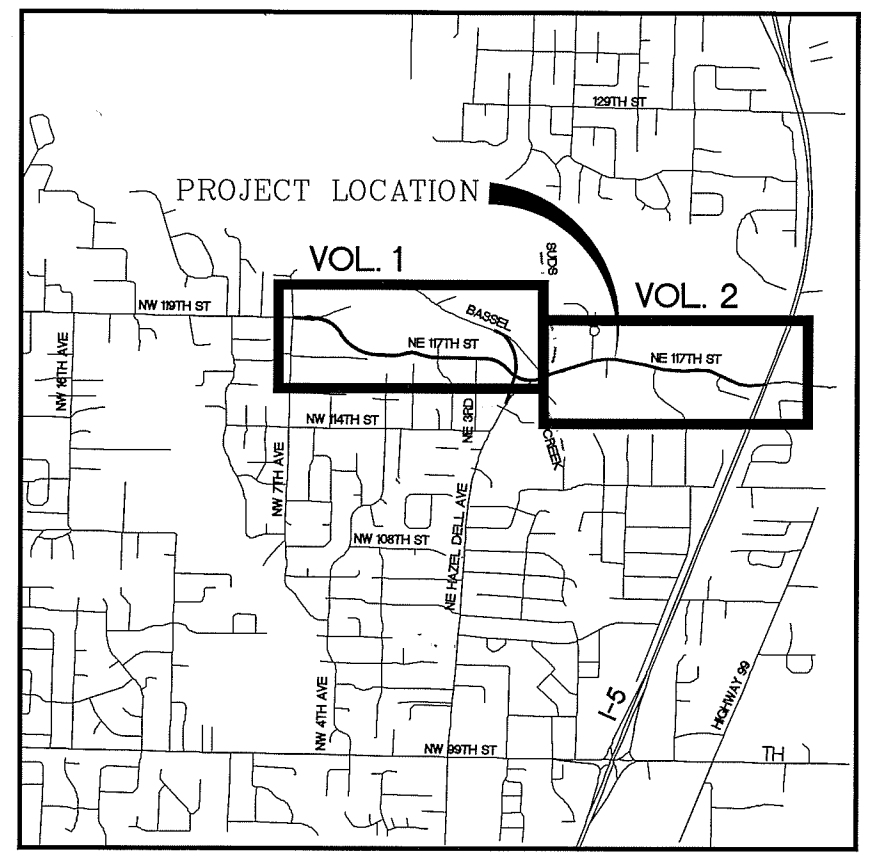

COMMISSIONERS:

BETTY SUE MORRIS, Chair
JUDIE STANTON, Commissioner
CRAIG A. PRIDEMORE, Commissioner

proud past, promising future
CLARK COUNTY
WASHINGTON

DEPARTMENT OF
PUBLIC WORKS

DESIGN AND ENGINEERING DIVISION- DESIGN SECTION

100% REVIEW SET

N:\CIP\PROJECTS\381022-NW117-119\DESIGN\DWGS\119COV-VOL2.dwg, Layout1, 10/18/2004 5:02:18 PM, begleyk

SUMMARY OF QUANTITIES - ROADWAY

ItemNum	BID ITEM	UNIT	QUANTITY	381022	320322
109.07	MOBILIZATION	L.S.	1	L.S.	L.S.
109.10	MINOR CHANGE	CALC.	2	1	1
109.13	REPLACEMENT STAKING SERVICES	HOUR	20	10	10
109.15	TEMP CONSTRUCTION PERMIT/PROPERTY OWNER AGREEMENT	L.S.	L.S.	0	L.S.
110.00	TRAFFIC CONTROL LABOR	HOUR	8200	3200	5000
110.10	TRAFFIC CONTROL SUPERVISOR	HOUR	2400	800	1600
110.21	TRAFFIC CONTROL VEHICLE	DAY	200	0	200
110.30	TEMPORARY TRAFFIC CONTROL DEVICES	L.S.	L.S.	L.S.	L.S.
110.31	PORTABLE CHANGEABLE MESSAGE SIGN	EACH	2	0	2
110.32	OPERATION OF PORTABLE CHANGEABLE MESSAGE SIGN	HOUR	500	0	500
110.40	CONSTRUCTION SIGNS CLASS "A"	S.F.	454	240	214
201.01	CLEARING AND GRUBBING	ACRE	18.3	12.5	5.8
201.20	ROADSIDE CLEANUP	EST.	EST.	EST.	EST.
201.31	CREEK BED RESTORATION	L.S.	L.S.	L.S.	0
202.00	REMOVAL OF STRUCTURES AND OBSTRUCTION	L.S.	L.S.	L.S.	L.S.
110.31	REMOVAL OF BUILDING	EACH	5	3	2
202.00	DEMOLITION OF SEPTC TANKS - FORCE ACCOUNT	EST.	EST.	0	EST.
202.12	DECOMMISION WELL	EACH	1	1	0
203.10	ROADWAY EXCAVATION (INCL. HAUL)	C.Y.	56380	47660	8720
203.12	WALKWAY EXCAVATION (INCL. HAUL)	C.Y.	220	220	0
203.15	STORMWATER FACILITY EXCAVATION (INCL HAUL)	C.Y.	32672	28830	3842
203.20	EMBANKMENT COMPACTION	C.Y.	48034	44250	3784
203.21	STORMWATER FACILITY EMBANKMENT COMPACTION	C.Y.	8689	7627	1062
207.00	WATER	MGAL	668	500	168
210.00	DITCH EXCAVATION (INCL. HAUL)	C.Y.	1465	0	1465
212.00	CONSTRUCTION GEOTEXTILE FOR SOIL STABILIZATION	S.Y.	5722	0	5722
212.00	CONSTRUCTION GEOTEXTILE FOR DITCH LINING	S.Y.	914	911	3
	IMPERMEABLE LINER	S.Y.	4783	0	4783
212.11	WETLAND BALLAST	S.Y.	10532	10532	0
404.50	CRUSHED SURFACING BASE COURSE	TON	48857	40389	8468
404.52	CRUSHED SURFACING TOP COURSE	TON	656	656	0
404.54	BALLAST (INCL. HAUL)	TON	6390	0	6390
504.02	ASPHALT CONCRETE PAVEMENT CL. A	TON	6043	3108	2935
504.03	ASPHALT CONCRETE PAVEMENT CL. E	TON	9716	4156	5560
504.11	SAWCUT EXISTING ASPHALT PAVEMENT	L.F.	1933	946	987
504.14	PLANING BITUMINOUS PAVEMENT	S.Y.	644	56	588
504.21	ASPHALT CONCRETE APPROACH CL. A	S.Y.	1464	789	675
505.01	SAWCUT CEMENT CONC. PAVEMENT	L.F.	939	939	0
602.35	STRUCTURAL EARTH WALL W/ HANDRAIL	S.F.	9514	0	9514
602.56	COATED CHAIN LINK FENCE FOR WALL TYPE 6	L.F.	370	370	0
604.00	TIMBER STRUCTURE (WOODEN FOOTBRIDGE W/ PED. HANDRAIL	L.S.	1	0	$15,000.00
606.05	HANDRAIL FOR WALL	L.F.	484	484	0
610.19	CONCRETE BARRIER W/ TYPE 3 ANCHORS	L.F.	13	0	13
610.26	CAST-IN-PLACE CONC. BARRIER/SIDEWALK	L.F.	484	484	0
612.30	NOISE BARRIER/RETAINING WALL DESIGN	L.S.	1	1	0
612.32	NOISE BARRIER/RETAINING WALL	S.F.	6252	6252	0
612.41	GEOGRID SOIL REINFORCEMENT FABRIC	S.Y.	3851	3851	0
612.49	CAST-IN-PLACE RETAINING WALL (WITH TYPE 1 FENCE)	S.F.	3441	0	3441
612.51	MODULAR / SEGMENTAL BLOCK RET. WALL (INCL. CAP UNIT)	S.F.	7056	7056	0
612.59	ECOLOGY BLOCK FOR WALL	EACH	351	351	0
615.00	BINWALL CATHODIC PROTECT.REPLACEMENT(CONTRACTOR DESIGN)	L.S.	L.S.	0	L.S.
701.12	PERFORATED UNDERDRAIN PIPE 12 IN. DIAM.	L.F.	10	10	0
701.18	PERFORATED UNDERDRAIN PIPE 18 IN. DIAM.	L.F.	238	0	238
702.18	CULVERT PIPE 18 IN. DIAM	L.F.	539	0	539
702.24	CULVERT PIPE 24 IN. DIAM	L.F.	115	115	0
703.01	ALUM ST. CULV. PIPE ARCH 0.075 IN. TH 60 IN. SPAN	L.F.	90	90	0
703.02	ALUM ST. CULV. PIPE ARCH 0.075 IN. TH 73 IN. SPAN	L.F.	111	111	0
704.10	STORM SEWER PIPE, 10 IN. DIAM.	L.F.	1433	1030	403
704.11	DUCTILE IRON STORM SEWER PIPE, 10 IN. DIAM.	L.F.	425	0	425
704.12	STORM SEWER PIPE, 12 IN. DIAM.	L.F.	3350	3311	39
704.18	STORM SEWER PIPE, 18 IN. DIAM.	L.F.	6712	3772	2940
	CORRUGATED STORM SEWER PIPE, 18 IN. DIAM.	L.F.	3241	301	2940
704.24	STORM SEWER PIPE, 24 IN. DIAM.	L.F.	23	23	0
	TRASH RACK	EACH	3	3	0
704.75	HDPE STORM SEWER PIPE, 18 IN. DIAM.	L.F.	240	0	240
705.00	CONSTRUCT MANHOLE 48 IN. DIAM OVER EXISTING SEWER LINE	EACH	1	1	0

ItemNum	BID ITEM	UNIT	QUANTITY	381022	320322
705.01	MANHOLE 48 IN. DIAM. TYPE 1	EACH	20	20	0
705.14	MANHOLE 48 IN. DIAM. TYPE 3	EACH	50	28	22
705.14	MANHOLE 60 IN. DIAM. TYPE 3	EACH	2	2	0
705.18	MANHOLE 60 IN. DIAM. TYPE 3 WITH FLOW CONTROL	EACH	3	3	0
705.23	MANHOLE 96 IN. DIAM. TYPE 3	EACH	2	0	2
705.35	CATCH BASIN TYPE 1	EACH	1	1	0
705.50	MODIFIED INLET TYPE 2 (OUTLET STRUCTURE)	EACH	1	0	1
705.51	MODIFIED RISER OUTLET	EACH	1	1	0
705.62	CONCRETE CURB INLET	EACH	27	6	21
705.63	CONCRETE COMBINATION CURB INLET	EACH	46	30	16
705.64	CONCRETE DITCH INLET	EACH	11	5	6
705.70	AREA DRAIN/INLET	EACH	3	3	0
705.80	ADJUST MANHOLE/ CATCH BASIN/ INLET/ DRYWELL METHOD 1	EACH	40	17	23
705.85	ADJUST TELEPHONE MANHOLE	EACH	18	0	18
705.86	CONNECT TO DRAINAGE STRUCTURE	EACH	6	0	6
706.01	STANDARD PRECAST STORMFILTER UNIT	L.S.	L.S.	L.S.	0
706.51	LOG WEIR	EACH	7	7	0
708.00	TRENCH SAFETY SYSTEM	L.F.	8292	5047	3245
708.03	PLUGGING EXISTING PIPE	EACH	6	1	5
709.00	ADJUST WATER/GAS/SANITARY VALVE RIM, COVER & FRAME	EACH	33	23	10
801.20	ESC LEAD	HOUR	750	250	500
801.21	EROSION CONTROL SEEDING AND MULCHING	ACRE	8.8	5.8	3
801.22	EROSION CONTROL BLANKET	S.Y.	17250	17250	
801.40	STABILIZED CONSTRUCTION ENTRANCE	EACH	5	4	1
801.41	TIRE WASH	EACH	5	4	1
801.50	INLET PROTECTION	EACH	99	42	57
801.51	SILT FENCE	L.F.	14355	6115	8240
801.52	WATTLE	L.F.	40	0	40
801.53	EROSION CONTROL & SPILL PREVENTION REINSPECTION FEE	EACH	2	1	1
801.57	SPCC PLAN	L.S.	L.S.	L.S.	L.S.
802.02	TOPSOIL TYPE B	C.Y.	1440	1440	0
802.24	PSIPE - 1.5 IN. CALIPER TREES (Prunus)	EACH	15	15	0
802.25	PSIPE - 1.5 IN. CALIPER TREES (Acer platanoides "Crimson Sentry")	EACH	42	42	0
802.40	PSIPE - SHRUB, EVERGREEN, 1 GAL. (Lavandula angustifolia)	EACH	534	534	0
802.45	PSIPE - SHRUB, EVERGREEN, 2 GAL. (Viburnum davidii)	EACH	271	271	0
802.51	PSIPE - SHRUB, DECIDUOUS, 2 GAL. (Spiraea japonica "Goldflame")	EACH	343	343	0
802.63	PSIPE - GROUNDCOVER, 1 GAL (Arctostaphylos uva-ursi)	EACH	2521	2521	0
802.63	PSIPE - GROUNDCOVER, 1 GAL (Cotoneaster dammeri "Coral Beauty"	EACH	1751	1751	0
802.70	WILLOW STAKES	L.S.	L.S.	0	L.S.
802.82	COMPOST AMENDED TOPSOIL	C.Y.	1300	0	1300
802.86	BARK MULCH	C.Y.	600	480	120
802.90	STORMWATER FACILITY SEEDING AND MULCHING	ACRE	2.7	2.7	
802.95	TURF REINFORCEMENT	S.F.	1168	1088	80
	BIOENGINEERED STREAMBANK PROTECTION	L.S.	L.S.	L.S.	0
804.00	CEMENT CONC. TRAFFIC CURB	L.F.	430	430	0
804.01	CEMENT CONC. BARRIER CURB AND GUTTER	L.F.	20118	12766	7352
804.03	SINGLE-FACED MOUNTABLE CEMENT CONC. CURB	L.F.	150	150	0
804.20	EXTRUDED CURB, TYPE 1	L.F.	47	47	0
806.00	CEMENT CONCRETE APPROACH, 3-DAY	S.Y.	1014	467	547
811.00	BEAM GUARDRAIL TYPE 1	L.F.	527	527	0
811.13	BEAM GUARDRAIL FLARED TERMINAL	EACH	2	2	0
811.16	BEAM GUARDRAIL SRT 350 TERMINAL	EACH	2	2	0
811.17	BEAM GUARDRAIL NON-FLARED TERMINAL	EACH	1	0	1
811.19	BEAM GUARDRAIL BARRIER TRANSITION	EACH	1	1	0
811.20	REMOVING BEAM GUARDRAIL	L.F.	939	0	939
811.22	REMOVING BEAM GUARDRAIL ANCHOR	EACH	8	0	8
812.13	CHAIN LINK FENCE - TYPE 6	L.F.	570	0	570
812.39	COATED CHAIN LINK FENCE - TYPE 1	L.F.	3655	1935	1720
812.42	DOUBLE 14 FT. COATED CHAIN LINK GATE	EACH	2	0	2
812.43	DOUBLE 20 FT. COATED CHAIN LINK GATE	EACH	4	4	0
812.52	WOOD FENCE RELOCATION	L.F.	30	0	30
812.53	FENCE REMOVAL	L.F.	2722	1999	723
813.00	MONUMENT CASE AND COVER	EACH	41	21	20
814.01	CEMENT CONCRETE SIDEWALK	S.Y.	10325	5460	4865
815.11	LIGHT LOOSE RIPRAP	C.Y.	84	45	39
815.30	HAND PLACED RIP RAP	C.Y.	25	25	0
815.31	QUARRY SPALLS	C.Y.	334	249	85
818.00	MAILBOX SUPPORT, TYPE 1	EACH	10	3	7
818.20	MAILBOX SUPPORT, TYPE 2	EACH	10	3	7
818.30	NBU MAILBOX, 8 UNIT TYPE 1	EACH	2	0	2
820.30	TRAFFIC SIGNAL SYSTEM (NE 117th St/Hazel Dell)	L.S.	L.S.	L.S.	0

GENERAL LEGEND

- ROW LINE
- NEW EDGE OF PAVEMENT
- NEW CURB LINE
- NEW CONSTRUCTION CENTER LINE
- NEW ROW/SURVEY CENTER LINE
- NEW FENCE LINE
- NEW STORM DRAIN OR CULVERT
- NEW FILL LIMITS
- NEW CUT LIMITS
- PERMANENT SLOPE EASEMENT
- NEW SILT FENCE
- EXISTING EDGE OF PAVEMENT
- EXISTING CURB LINE
- EXISTING CENTER LINE
- EXISTING FENCE LINE
- EXISTING TELEPHONE LINE
- EXISTING WATER LINE
- EXISTING UNDERGROUND ELECTRIC
- EXISTING SANITARY SEWER LINE
- EXISTING STORM DRAINAGE
- EXISTING GAS LINE
- EXISTING CULVERT
- EXISTING DITCH CENTER LINE
- EXISTING GUARDRAIL

GENERAL SYMBOLS

- NEW CATCH BASIN (CB)
- NEW MANHOLE (MH)
- NEW CURB INLET (CI)
- NEW COMBINATION CURB INLET (CCI)
- NEW MAIL BOX
- NEW HANDICAP RAMP
- C100 CURVE TABLE
- EXISTING TRANSFORMER
- EXISTING ELEC TOWER
- SAN EXISTING SANITARY SEWER MH
- EXISTING FIRE HYDRANT
- CL EXISTING CLEAN OUT
- EXISTING GAS VALVE
- EXISTING WATER METER
- EXISTING WATER VALVE
- EXISTING SIGNAL POLE
- T EXISTING TELEPHONE VAULT
- TV EXISTING TELEVISION BOX
- EXISTING WELL
- EXISTING BRUSH LINE
- EXISTING HEDGE
- EXISTING CURB INLET (CI)
- EXISTING CATCH BASIN (CB)
- EXISTING STORM MH
- EXISTING MISC MH
- EXISTING SHRUB
- EXISTING CONIFEROUS TREE
- EXISTING DECIDUOUS TREE
- EXISTING SIGN
- EXISTING DECIDUOUS TREE
- EXISTING J BOX
- EXISTING TELEPHONE MANHOLE
- EXISTING TELEPHONE POLE
- EXISTING LIGHT
- EXISTING GUY ANCHOR
- EXISTING POWER POLE
- MB EXISTING MAIL BOX
- T EXISTING TELEPHONE PEDESTAL
- EXISTING SPRINKLER HEAD
- TRAVERSE POINT
- TEST HOLE

DESIGNED	MME
DRAWN	BAK
CRP	381022
HOR.	NA
VERT.	NA
DATE	10/20/01
DWG:	S001
SHEET	OF

CALL 48 HOURS BEFORE YOU DIG 1-800-553-4344 "It's the Law" NORTHWEST UTILITIES NOTIFICATION CENTER

MICHAEL M. BURLICK STATE OF WASHINGTON 29300 REGISTERED PROFESSIONAL ENGINEER
EXPIRES JULY 26, 2005

DESIGN & ENGINEERING DIVISION
DESIGN SECTION

NW 119TH / 117TH STREET
SUMMARY OF QUANTITIES AND LEGEND

proud past, promising future
CLARK COUNTY WASHINGTON

SUMMARY OF QUANTITIES - CPU WATERLINE WEST

BID ITEM		DESCRIPTION	UNIT	QUANTITY
1A		MOBILIZATION	LS	LS
2A		MINOR CHANGES	CALC	CALC
3A		TRAFFIC CONTROL LABOR	HR	24
4A		TEMPORARY TRAFFIC CONTROL DEVICES	LS	LS
5	1	CONNECT TO EXTG 12" PVC (W) w/12" PVC C-900 PC-150 (W) 12" STAINLESS STEEL TAPPING SLEEVE w/TB 12" FLGxMJ TAPPING GATE VALVE w/VALVE BOX & Mega Lug Restraints	EA	1
6		4" PVC C-900, PC-150 PIPE Type "C-1" Asphalt Surface Restoration	LF	20
7		6" PVC C-900, PC-150 PIPE Type "C-1" Asphalt Surface Restoration	LF	185
8		6" PVC C-900, PC-150 PIPE Type "R" Surface Restoration	LF	60
9		8" PVC C-900, PC-150 PIPE Type "R" Surface Restoration	LF	110
10		12" PVC C-900, PC-150 PIPE Type "R" Surface Restoration	LF	2540
11		12" PVC C-900, PC-150 PIPE Type "C-1" Asphalt Surface Restoration	LF	860
12	2	12"x 8" FLG TEE w/TB 12" FLGxMJ BF VALVE w/VALVE BOX & Mega Lug Restraints 8" FLGxMJ GATE VALVE w/VALVE BOX & Mega Lug Restraints 12" FLGxMJ ADAPTER w/Mega Lug Restraints	EA	3
13	3	8" MJ x 6" SIDE FLG TEE w/TB 6" FLGxMJ GATE VALVE w/VALVE BOX & Mega Lug Restraints STANDARD FIRE HYDRANT ASSEMBLY LOCATE HYDRANT AS DIRECTED BY CLARK PUBLIC UTILITIES	EA	3
14	4	CAP & BLOCK 8" PVC C-900, PC-150(W)	EA	3
15	5	12" MJ 22½° BEND w/TB & Mega Lug Restraints	EA	2
16	6	12" FLG CROSS 12" FLGxMJ BF VALVE w/VALVE BOX & Mega Lug Restraint 12" x 6" FLGxMJ REDUCER w/Mega Lug Restraint 12" FLGxMJ ADAPTER w/Mega Lug Restraints 6" FLGxMJ GATE VALVE w/VALVE BOX & Mega Lug Restraint 12"x6" FLG REDUCER	EA	1
17	7	AFTER SATISFACTORY TESTING & ACCEPTANCE OF NEW MAIN, CONNECT TO EXTG 6" PVC(W)/6" PVC C-900 PC-150 (W) 6" MJ SLEEVE (PVC C-900 PC-150 TO PVC) CUT & CAP EXTG 6" PVC(W)	EA	2
18	8	12" MJ 45° BEND w/TB & Mega Lug Restraints	EA	3
19	9	12" x 6" FLG TEE w/TB 12" FLGxMJ BF VALVE w/VALVE BOX & Mega Lug Restraint 6" FLGxMJ GATE VALVE w/VALVE BOX & Mega Lug Restraint 12" FLGxMJ ADAPTER w/Mega Lug Restraints	EA	1
20	10	6" x 4" FLG TEE w/TB 6" FLGxMJ GATE VALVE w/VALVE BOX & Mega Lug Restraint 4" FLGxMJ GATE VALVE w/VALVE BOX & Mega Lug Restraint 6" FLGxMJ ADAPTER w/Mega Lug Restraints	EA	1
21	11	STD BLOW OFF ASSEMBLY w/PRECAST TB	EA	4
22	12	4" MJ 90° BEND w/TB & Mega Lug Restraints	EA	1
23	13	AFTER SATISFACTORY TESTING & ACCEPTANCE OF NEW MAIN, CONNECT TO EXTG 4" STL(W)/4" PVC C-900 PC-150 (W) 4" TRANSITION COUPLING (PVC C-900 PC-150 TO STEEL) CUT & CAP EXTG 4" STL(W)	EA	1
24	14	12" FLG TEE w/TB (3)12" FLGxMJ BF VALVE w/VALVE BOX & Mega Lug Restraint	EA	1
25	15	12" MJ 90° BEND w/TB & Mega Lug Restraints	EA	3
26	16	AFTER SATISFACTORY TESTING & ACCEPTANCE OF NEW MAIN, CONNECT TO EXTG 12" PVC CL-200(W)/12" PVC C-900 PC-150 (W) 12" MJ SLEEVE (PVC C-900 PC-150 TO PVC CL-200) CUT & CAP EXTG 12" PVC CL-200(W)	EA	2
27	17	STANDARD WATER SERVICE - NEAR SIDE	EA	5
28	18	STANDARD WATER SERVICE - FAR SIDE	EA	2
		TRANSFER EXTG WATER SERVICE LINE TO NEW TAP AFTER TESTING & ACCEPTANCE OF NEW MAIN. EACH METER TO HAVE INDIVIDUAL SERVICE PER CLARK PUBLIC UTILITIES STD DETAILS, SHEET 5. EXTG WATER SERVICES OTHER THAN P.E. CL-200 SHALL BE REPLACED AND NEW SERVICES SHALL BE EXTENDED TO THE METER. FOR FAR SIDE SERVICES, THE CONTRACTOR SHALL BORE OR PUSH THE SERVICE UNDER THE ROADWAY.		
29	19	12" FLGxMJ TEE W/TB & Mega Lug Restraints 12"FLGxMJ BF VALVE W/VALVE BOX & Mega Lug Restraints 12" FLGxMJ ADAPTER W/Mega Lug Restraints	EA	1
30	20	6" MJ 45° BENDS W/TB & Mega Lug Restraints	EA	4
31	21	AFTER SATISFACTORY TESTING & ACCEPTANCE OF NEW MAIN, REMOVE BLOW-OFF ASSEMBLIES AND CONNECT TO 12" PVC C-900, PC-150(W) 74 LF 12" PVC C-900, PC-150(W) 12" 11 1/4° MJ BEND W/TB & MEGA LUG RESTRAINTS (2) 12" MJ SLEEVE (PVC C-900 TO PVC-C900) W/MEGA LUG RESTRAINTS EMERGENCY CONNECTION	EA	1

SUMMARY OF QUANTITIES - CPU WATERLINE EAST

Item	Description	Unit	Quan.
1	Mobilization	L.S.	L.S.
2	Traffic Control	L.S.	L.S.
3	12" D.I. Main w/ Type R Restoration	L.F.	3,260
4	Std. Perpendicular Blow-off Assembly, Assembly No. 1	EA.	2
5	Pipe, Valves and Fittings, Assembly No. 2	EA.	1
6	Cut, Connect and Fittings, Assembly No. 3A	EA.	2
7	Cut, Connect and Fittings, Assembly No. 3B	EA.	1
8	Cut, Connect and Fittings, Assembly No. 3C	EA.	1
9	Cut, Connect and Fittings, Assembly No. 3D	EA.	2
10	Near-side Water Service, Assembly No. 4N	EA.	2
11	Far-side Water Service, Assembly No. 4F	EA.	6
12	Near-side Water Service, Assembly No. 5N-R	EA.	6
13	Far-side Water Service, Assembly No. 5F	EA.	4
14	Far-side Water Service, Assembly No. 5F-R	EA.	5
15	Std. Fire Hydrant Assembly (removal / return), Assembly No. 6	EA.	3
16	Pipe, Valves and Fittings, Assembly No. 7	EA.	1
17	Fittings, Assembly No. 8	EA.	5
18	Pipe, Valve and Fittings, Assembly No. 9	EA.	1
19	Pipe, Valves and Fittings, Assembly No. 10	EA.	1
20	Pipe, Valve and Fittings, Assembly No. 11	EA.	1
21	Pipe, Valve and Fittings, Assembly No. 12	EA.	1
22	Pipe, Valve and Fittings, Assembly No. 13	EA.	1
23	Connect and Fittings, Assembly No. 14	EA.	1
24	Cut and Fittings, Assembly No. 15	EA.	2
25	Near-side Water Service, Assembly No. 16N-R	EA.	1

SUMMARY OF QUANTITIES
CLARK COUNTY - SANITARY SEWER

SEGMENT 1

ItemNum	BID ITEM	UNIT	QUANTITY
	MOBILIZATION	L.S.	L.S.
	ASPHALT CONCRETE PAVEMENT		
504.11	SAWCUT EXISTING ASPHALT PAVEMENT	L.F.	119
	DRAINAGE STRUCTURES/STORM SEWER UTILITIES		
705.XX	RELOCATION OF EXISTING SANITARY SEWER MANHOLE	EACH	1
708.00	TRENCH SAFETY SYSTEM	L.F.	6089
708.03	PLUGGING EXISTING PIPE	EACH	1
717.17	SANITARY SEWER FORCE MAIN, DUAL 36-INCH DIAM.	L.F.	4233
717.18	SANITARY SEWER FORCE MAIN, SINGLE 36-INCH DIAM.	L.F.	1851
717.36	EXTEND SANITARY SEWER LATERALS	EACH	2
717.40	TESTING SEWER PIPE (FORCE MAIN)	L.F.	10317
717.65	AIR/VACUUM VAULT	EACH	1
717.XX	REMOVAL AND REPLACEMENT OF UNSUITABLE MATERIAL	C.Y.	100
717A.00	LOCATOR STATION	EACH	22
717B.00	SANITARY SEWER BYPASS SYSTEM	L.S.	L.S.
	EROSION CONTROL AND RESTORATION		
801.51	SILT FENCE	L.F.	115
802.08	LANDSCAPE RESTORATION	L.S.	L.S.
802.89	SEEDING AND MULCHING	ACRE	2

SEGMENT 2

ItemNum	BID ITEM	UNIT	QUANTITY
	MOBILIZATION	L.S.	L.S.
	ASPHALT CONCRETE PAVEMENT		
504.11	SAWCUT EXISTING ASPHALT PAVEMENT	L.F.	526
	DRAINAGE STRUCTURES/STORM SEWER UTILITIES		
705.11	MANHOLE 72 IN. DIAM. TYPE 2	EACH	5
705.11	MANHOLE 72 IN. DIAM. TYPE 2 W/ 36-INCH OPENING	EACH	1
705.17	MANHOLE 72 IN. DIAM. TYPE 3	EACH	1
705.XX	FURNISH AND INSTALL MANHOLE SEALANT WRAPS	EACH	3
708.00	TRENCH SAFETY SYSTEM	L.F.	2093
717.07	SANITARY SEWER PIPE 48-INCH DIAM	L.F.	2093
717.19	SANITARY SEWER PIPE 24-INCH DIAM	L.F.	18
717.40	TESTING SEWER PIPE (GRAVITY MAIN)	L.F.	2093
717.50	CONNECT TO EXISTING SANITARY SEWER MANHOLE	EACH	1
717.XX	REMOVAL AND REPLACEMENT OF UNSUITABLE MATERIAL	C.Y.	100
717A.00	LOCATOR STATION	EACH	2
717C.00	CONNECT TO EXISTING SANITARY SEWER	EACH	1
	EROSION CONTROL AND RESTORATION		
802.08	LANDSCAPE RESTORATION	L.S.	L.S.
802.89	SEEDING AND MULCHING	ACRE	1

DESIGNED MME
DRAWN BAK
CRP 381022
HOR. NA
VERT. NA
DATE 10/20/01
DWG. SQ02
SHEET OF

CALL 48 HOURS BEFORE YOU DIG 1-800-553-4344 "It's the Law" NORTHWEST UTILITIES NOTIFICATION CENTER

EXPIRES: MAY 29, 2005

DESIGN & ENGINEERING DIVISION
DESIGN SECTION

NW 119TH / 117TH STREET
SUMMARY OF QUANTITIES

proud past, promising future
CLARK COUNTY WASHINGTON

CAPITAL IMPROVEMENTS PROGRAM

COUNTY ROAD PROJECT # 320322

NE 117th STREET

NE HAZEL DELL AVENUE TO NE HIGHWAY 99

PLANS FOR THE CONSTRUCTION OF
ROADWAY, RETAINING WALLS, AND STORM DRAINAGE

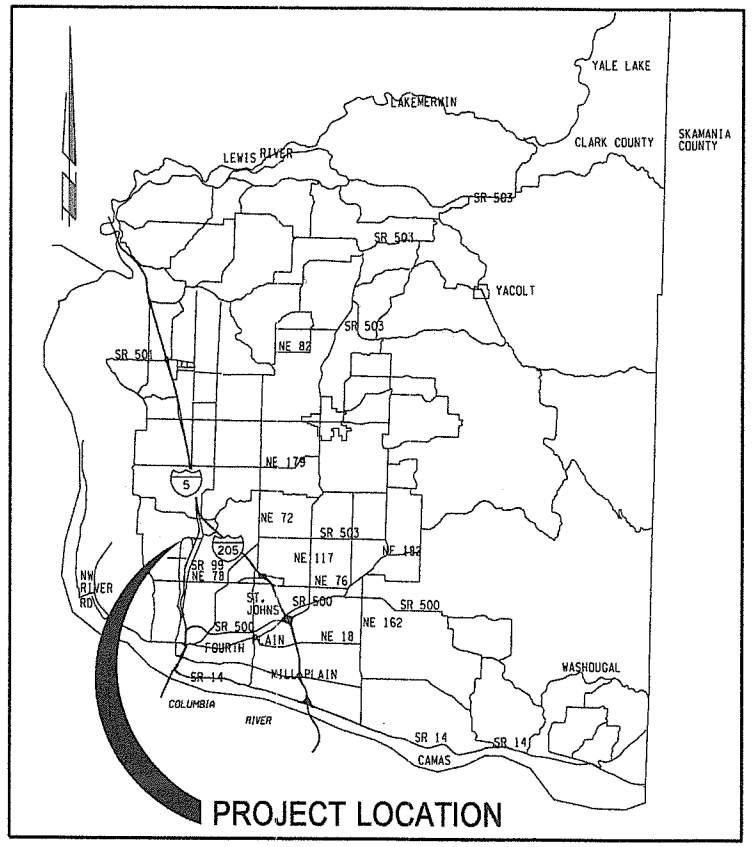

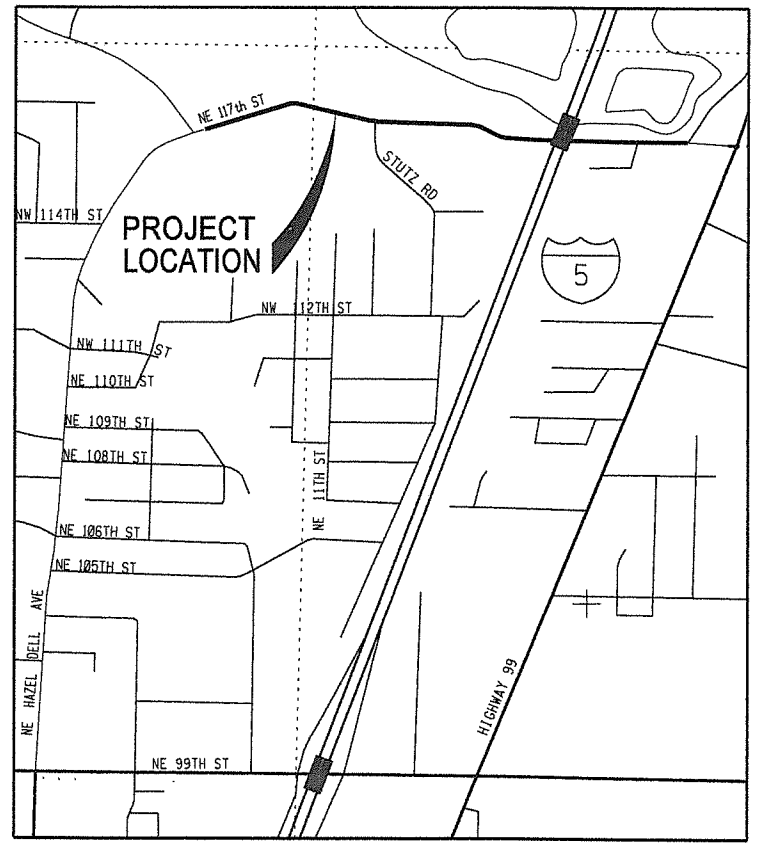

INDEX OF SHEETS

SHT NO.		
1	CV	COVER SHEET
2	SQ	SUMMARY OF QUANTITIES AND LEGEND
3	LAY	SHEET LAYOUT
4	TS1	TYPICAL SECTIONS
5	TS2	TYPICAL SECTIONS
6	HV1	HORIZONTAL AND VERTICAL CONTROL
7	HV2	HORIZONTAL AND VERTICAL CONTROL
8	EC1	EROSION CONTROL PLAN
9	EC2	EROSION CONTROL PLAN
10	SW1	STORMWATER FACILITY-WETLAND
11	SW2	STORMWATER FACILITY-STAKING PLAN
12	SW3	STORMWATER FACILITY-OFFSITE BYPASS
13	SW4	STORMWATER FACILITY-OFFSITE BYPASS
14	SW5	STORMWATER FACILITY-BYPASS DITCH PROFILES
15	ED1	EROSION CONTROL DETAILS
16	ED2	EROSION CONTROL DETAILS
17	SD1	STORMWATER FACILITY DETAILS
18	SD2	STORMWATER FACILITY DETAILS
19	DD1	DRAINAGE DETAILS
20	DD2	DRAINAGE DETAILS
21	DD3	DRAINAGE DETAILS
22	DD4	DRAINAGE DETAILS
23	DD5	DRAINAGE DETAILS
24	DD6	DRAINAGE DETAILS
25	AD1	APPROACH DETAILS
26	RD1	MISCELLANEOUS DETAILS
27	RD2	MISCELLANEOUS DETAILS
28	RD3	FOOT BRIDGE DETAILS
29	WD1	WALL DETAILS
30	WD2	WALL DETAILS
31	WP1	WALL PROFILE
32	WP2	WALL PROFILE
33	WP3	WALL PROFILE
34	WP4	WALL PROFILE
35	WP5	WALL PROFILE
36	WP6	WALL PROFILE
37	WP7	WALL PROFILE
38	WP8	WALL PROFILE
39	WP9	WALL PROFILE
40	PP1	PLAN & PROFILE NE 117TH (STA 10+00 TO 14+00)
41	PP2	PLAN & PROFILE NE 117TH (STA 14+00 TO 19+00)
42	PP3	PLAN & PROFILE NE 117TH (STA 19+00 TO 24+00
43	PP4	PLAN & PROFILE NE 117TH (STA 24+00 TO 29+00)
44	PP5	PLAN & PROFILE NE 117TH (STA 29+00 TO 34+00)
45	PP6	PLAN & PROFILE NE 117TH (STA 34+00 TO 39+00)
46	PP7	PLAN & PROFILE NE 117TH (STA 39+00 TO 42+52.27)
47	PP8	PLAN & PROFILE NE 117TH (STA 42+52.27 TO EOP)
48	PP9	PLAN & PROFILE SALMON CREEK SPORTS COMPLEX (STA 10+00 TO 11+64)
49	PP10	PLAN & PROFILE STUTZ ROAD (STA 10+00 TO 11+00)
50	PP11	PLAN & PROFILE KLINELINE PARK (STA 10+00 TO 12+00)
51	PP12	PLAN & PROFILE 19th AVENUE (STA 10+00 TO 11+00)
52	DW1	DRIVEWAY PLAN AND PROFILE
53	DW2	DRIVEWAY SECTIONS AND WALL PROFILES
54	DP1	DRAINAGE PLAN NE 117TH (BOP TO 14+00)
55	DP2	DRAINAGE PLAN NE 117TH (STA 14+00 TO 19+00)
56	DP3	DRAINAGE PLAN NE 117TH (STA 19+00 TO 24+00)
57	DP4	DRAINAGE PLAN NE 117TH (STA 24+00 TO 29+00)
58	DP5	DRAINAGE PLAN NE 117TH (STA 29+00 TO 34+00)
59	DP6	DRAINAGE PLAN NE 117TH (STA 34+00 TO 39+00)
60	DP7	DRAINAGE PLAN NE 117TH (STA 39+00 TO 44+00)
61	DP8	DRAINAGE PLAN NE 117TH (STA 42+52.27 TO EOP)
62	DP9	DRAINAGE PLAN STORMWATER FACILITY LINE (STA 0+00 TO 4+00)
63	DP10	DRAINAGE PLAN STORMWATER FACILITY LINE (STA 4+00 TO 8+00)
64	DP11	DRAINAGE PLAN STORMWATER FACILITY LINE (STA 8+00 TO 13+72)
65	DP12	DRAINAGE PLAN CROSS CULVERT DETAILS
66	INT1	INTERSECTION PLAN HAZEL DELL SPORTS COMPLEX
67	INT2	INTERSECTION PLAN STUTZ ROAD
68	INT3	INTERSECTION PLAN KLINELINE PARK
69	INT4	INTERSECTION PLAN NE 19TH AVENUE
70	INT5	INTERSECTION PLAN NE KLINELINE ROAD
71	STO1	SIGNING AND STRIPING PLAN NE 117TH (STA 10+00 TO 14+00)
72	STO2	SIGNING AND STRIPING PLAN NE 117TH (STA 14+00 TO 19+00)
73	STO3	SIGNING AND STRIPING PLAN NE 117TH (STA 19+00 TO 24+00
74	STO4	SIGNING AND STRIPING PLAN NE 117TH (STA 24+00 TO 29+00)
75	STO5	SIGNING AND STRIPING PLAN NE 117TH (STA 29+00 TO 34+00)
76	STO6	SIGNING AND STRIPING PLAN NE 117TH (STA 34+00 TO 39+00)
77	STO7	SIGNING AND STRIPING PLAN NE 117TH (STA 39+00 TO 42+52.27)
78	STO8	SIGNING AND STRIPING PLAN NE 117TH (STA 42+52.2 TO EOP)

COMMISSIONERS:

BETTY SUE MORRIS, Chair
CRAIG PRIDEMORE, Commissioner
JUDIE STANTON, Commissioner

proud past, promising future
CLARK COUNTY
WASHINGTON

DEPARTMENT OF
PUBLIC WORKS

DESIGN AND ENGINEERING DIVISION- DESIGN SECTION

CONTRACT PLANS

DON A. OWINGS
STATE OF WASHINGTON
REGISTERED
PROFESSIONAL ENGINEER
3/30/04
EXPIRES 09/25/2004

ENG # 2004-00010

Quality Assurance	Project Manager	Public Works Director / County Engineer
4-14-04 DATE	4-14-04 DATE	4/14/04 DATE
Michael Emrick, P.E.	Robert Rogers	Peter Capell, P.E.

proud past, promising future
CLARK COUNTY
WASHINGTON

Recommended for Approval

Grading 4/14/04 Erosion 4/14/04

Storm Water Plan 4/14/04

Development Review Manager Date 4/14/2004

PRELIMINARY SUMMARY OF QUANTITIES

ITEM NO	BID ITEM IDENT NO	QUANTITY	BID ITEM DESCRIPTION	UNIT
1	109.07	1	MOBILIZATION	L.S.
2	109.10	1	MINOR CHANGE	CALC.
3	109.15	1	TEMPORARY CONSTRUCTION PERMIT/PROPERTY OWNER AGREEMENT	L.S.
			TRAFFIC CONTROL	
4	110.00	5,000	TRAFFIC CONTROL LABOR	HOUR
5	110.10	1,600	TRAFFIC CONTROL SUPERVISOR	HOUR
6	110.21	200	TRAFFIC CONTROL VEHICLE	DAY
7	110.30	1	TEMPORARY TRAFFIC CONTROL DEVICES	L.S.
8	110.31	2	PORTABLE CHANGEABLE MESSAGE SIGN	EACH
9	110.32	500	OPERATION OF PORTABLE CHANGEABLE MESSAGE SIGN	HOUR
10	110.40	214	CONSTRUCTION SIGNS CLASS A	S.F.
			PREPARATION	
11	201.01	6	CLEARING AND GRUBBING	ACRE
12	201.20	1	ROADSIDE CLEANUP	EST.
13	202.00	1	REMOVAL OF STRUCTURES AND OBSTRUCTIONS	L.S.
14	202.08	2	REMOVAL OF BUILDING	EACH
15	202.10	1	DEMOLITION OF SEPTIC TANKS - FORCE ACCOUNT	EST.
			GRADING	
16	203.10	8,850	ROADWAY EXCAVATION (INCL HAUL)	C.Y.
17	203.15	3,842	STORMWATER FACILITY EXCAVATION (INCL. HAUL)	C.Y.
18	203.20	3,830	EMBANKMENT COMPACTION	C.Y.
19	203.21	1,062	STORMWATER FACILITY EMBANKMENT COMPACTION	C.Y.
20	207.00	168	WATER	MGAL
21	210.00	1,465	DITCH EXCAVATION (INCL. HAUL)	C.Y.
22	212.03	5,722	CONST. GEOTEXTILE FOR SOIL STABILIZATION	S.Y.
23	212.05	3	CONST. GEOTEXTILE FOR DITCH LINING	S.Y.
24	212.10	4,783	IMPERMEABLE LINER	S.Y.
			SURFACING	
25	404.50	8,536	CRUSHED SURFACING BASE COURSE	TON
26	404.54	6,390	BALLAST	TON
			ASPHALT CONCRETE PAVEMENT	
27	504.02	2,935	ASPHALT CONCRETE PAVEMENT CLASS A	TON
28	504.03	5,560	ASPHALT CONCRETE PAVEMENT CLASS E	TON
29	504.11	987	SAWCUT EXISTING ASPHALT PAVEMENT	L.F.
30	504.14	588	PLANING BITUMINOUS PAVEMENT	S.Y.
31	504.21	950	ASPHALT CONCRETE APPROACH CL A	S.Y.
			STRUCTURES	
32	602.35	9,514	STRUCTURAL EARTH WALL W/ HANDRAIL	S.F.
33	604.00	1	TIMBER STRUCTURE (WOODEN FOOT BRIDGE W/ PED. HANDRAIL)	L.S.
34	610.19	13	CONCRET BARRIER W/ TYPE 3 ANCHORS	L.F.
35	612.40	172	MASONRY RETAINING WALL	S.F.
36	612.50	3,667	CONCRETE RETAINING WALL (WITH TYPE 1 FENCE)	S.F.
37	615.00	1	BIN WALL CATHODIC PROTECTION REPLACEMENT (CONTRACTOR DESIGN)	L.S.
			DRAINAGE STRUCTURES, STORM SEWER, UTILITIES	
38	701.18	238	UNDERDRAIN PIPE 18 IN. DIAM (PERFORATED)	L.F.
39	702.18	539	CULVERT PIPE 18 IN. DIAM	L.F.
40	704.10	403	STORM SEWER PIPE, 10 IN. DIAM.	L.F.
41	704.11	425	DUCTILE IRON STORM SEWER PIPE, 10 IN. DIAM	L.F.
42	704.12	39	STORM SEWER PIPE, 12 IN. DIAM.	L.F.
43	704.18	2,940	STORM SEWER PIPE, 18 IN DIAM.	L.F.
44	704.75	240	HDPE STORM SEWER PIPE, 18 IN. DIAM.	L.F.
45	705.14	22	MANHOLE 48 IN. DIAM. TYPE 3	EACH
46	705.18	2	MANHOLE 96 IN. DIAM. TYPE 3	EACH
47	705.24	1	MODIFIED INLET TYPE 2 (OUTLET STRUCTURE)	EACH
48	705.62	21	CONCRETE CURB INLET	EACH
49	705.63	16	CONCRETE COMBINATION CURB INLET	EACH
50	705.64	6	CONCRETE DITCH INLET	EACH
51	705.80	23	ADJUST MANHOLE/ CATCH BASIN/ INLET/DRYWELL METHOD 1	EACH
52	705.85	18	ADJUST TELEPHONE MANHOLE	EACH
53	705.86	6	CONNECTION TO DRAINAGE STRUCTURE	EACH
54	708.00	3,245	TRENCH SAFETY SYSTEM	L.F.
55	708.03	5	PLUGGING EXISTING PIPE	EACH
56	709.00	10	ADJUST WATER/GAS VALVE RIM COVER & FRAME	EACH
57	714.02	1	MOVING EXISTING HYDRANTS	EACH
58	715.09	20	RELOCATE WATER METER BOX & SERVICE	EACH
59	717.20	887	DUCTILE IRON SEWER PIPE 18 IN. DIAM.	L.F.
60	717.40	4,694	TESTING STORM SEWER PIPE	L.F.
			EROSION CONTROL AND PLANTING	
61	801.51	8,240	SILT FENCE	L.F.
62	801.52	40	WATTLE	L.F.
63	801.40	1	STABILIZED CONSTRUCTION ENTRANCE	EACH
64	801.41	1	TIRE WASH	EACH
65	801.50	57	INLET PROTECTION	EACH
66	801.20	140	ESC LEAD	DAY
67	801.53	1	EROSION CONTROL AND SPILL PREVENTION REINSPECTION FEE	EACH
68	801.57	1	SPCC PLAN	L.S.
69	802.70	40	WILLOW STAKES	EACH
70	802.82	940	COMPOST AMENDED TOPSOIL	C.Y.
71	802.86	120	BARK MULCH	C.Y.
72	802.88	3	EROSION CONTROL SEEDING AND MULCHING	ACRE
73	802.95	80	TURF REINFORCEMENT	S.F.
			OTHER	
74	804.01	7,352	CEMENT CONC. BARRIER CURB AND GUTTER	L.F.
75	806.00	729	CEMENT CONCRETE APPROACH, 3 DAY	S.Y.
76	811.17	1	BEAM GUARDRAIL NON-FLARED TERMINAL	EACH
77	811.20	939	REMOVING BEAM GUARDRAIL	L.F.
78	811.22	8	REMOVING BEAM GUARDRAIL ANCHOR	EACH
79	812.13	570	CHAIN LINK FENCE - TYPE 6	L.F.
80	812.37	1,720	COATED CHAINLINK FENCE TYPE 1	L.F.
81	812.42	2	DOUBLE 14 FT. COATED CHAIN LINK GATE	EACH
82	812.52	30	WOOD FENCE RELOCATION (INCL. GATE)	L.F.
83	812.53	723	FENCE REMOVAL - CHAIN LINK FENCE	L.F.
84	813.00	20	MONUMENT CASE AND COVER	EACH
85	814.01	4,865	CEMENT CONC. SIDEWALK	S.Y.
86	815.11	39	LIGHT LOOSE RIPRAP	C.Y.
87	815.31	85	QUARRY SPALLS	C.Y.
88	818.00	7	MAILBOX SUPPORT - TYPE 1	EACH
89	818.20	7	MAILBOX SUPPORT - TYPE 2	EACH
90	818.30	2	NBU MAILBOX, 8 UNIT TYPE 1	EACH

LEGEND

- NEW DITCH CENTERLINE
- NEW GUARDRAIL
- RETAINING WALL
- ROW LINE
- NEW EDGE OF PAVEMENT
- NEW CURB LINE (FACE AND BACK)
- NEW CENTER LINE
- NEW FENCE LINE
- NEW STORM DRAIN OR CULVERT
- FILL — NEW FILL LIMITS
- CUT — NEW CUT LIMITS
- SAW — SAWCUT LINE
- PERMANENT SLOPE EASEMENT
- NEW SILT FENCE
- S — NEW SANITARY SEWER
- EXISTING RETAINING WALL
- EXISTING EDGE OF PAVEMENT
- EXISTING CENTER LINE
- EXISTING FENCE LINE
- BT — EXISTING TELEPHONE LINE
- W — EXISTING WATER LINE
- BP — EXISTING UNDERGROUND ELECTRIC
- S — EXISTING SANITARY SEWER LINE
- ST — EXISTING STORM DRAINAGE
- G — EXISTING GAS LINE
- EXISTING CULVERT
- EXISTING DITCH CENTER LINE
- DELINEATED WETLAND
- EXISTING GUARDRAIL
- L — EXISTING LANDSCAPING
- EXISTING ROW LINE

SYMBOLS

- NEW DITCH INLET
- NEW CATCH BASIN
- NEW MANHOLE
- NEW CURB INLET
- NEW COMBINATION CURB INLET
- MB — NEW MAILBOX
- CURVE TABLE
- WATTLE
- EXISTING WELL
- EXISTING BRUSH LINE
- EXISTING HEDGE/SHRUB
- EXISTING CONIFEROUS TREE
- EXISTING DECIDUOUS TREE
- MB — EXISTING MAILBOX
- EXISTING TRANSFORMER
- EXISTING ELECTRIC TOWER
- SAN — EXISTING SANITARY MANHOLE
- EXISTING FIRE HYDRANT
- CL — EXISTING CLEANOUT
- G — EXISTING GAS VALVE
- EXISTING OSPREY NEST
- EXISTING POST
- EXISTING WATER METER
- HB — EXISTING HOSE BIB
- W — EXISTING WATER VALVE
- T — EXISTING TELEPHONE VAULT
- tv — EXISTING TELEVISION BOX
- T — EXISTING TELEPHONE MANHOLE
- EXISTING TELEPHONE POLE
- EXISTING GUY ANCHOR
- EXISTING POWER POLE
- T — EXISTING TELEPHONE PEDESTAL
- EXISTING SERVICE POLE
- EXISTING CURB INLET
- EXISTING CATCH BASIN
- S — EXISTING STORM MANHOLE
- EXISTING MISC MANHOLE
- EXISTING SIGN
- EXISTING LUMINAIRE
- J — EXISTING J BOX
- EXISTING LUMINAIRE
- EXISTING SPRINKLER HEAD
- TRAVERSE POINT
- TEST HOLE
- CURB RAMP

NOTE:
CONTRACTOR TO CHECK AND VERIFY ANY PROPERTY AGREEMENTS.

DESIGNED ATH/CRB	
DRAWN	CRB
CRP	320322
HOR.	N/A
VERT.	N/A
DATE	11/27/03
DWG:	SO
SHEET	2 OF 78

CALL 48 HOURS BEFORE YOU DIG 1-800-553-4344 "It's the Law" NORTHWEST UTILITIES NOTIFICATION CENTER

DESIGN & ENGINEERING DIVISION
DESIGN SECTION

NE 117th STREET
SUMMARY OF QUANTITIES AND LEGEND

proud past, promising future
CLARK COUNTY WASHINGTON

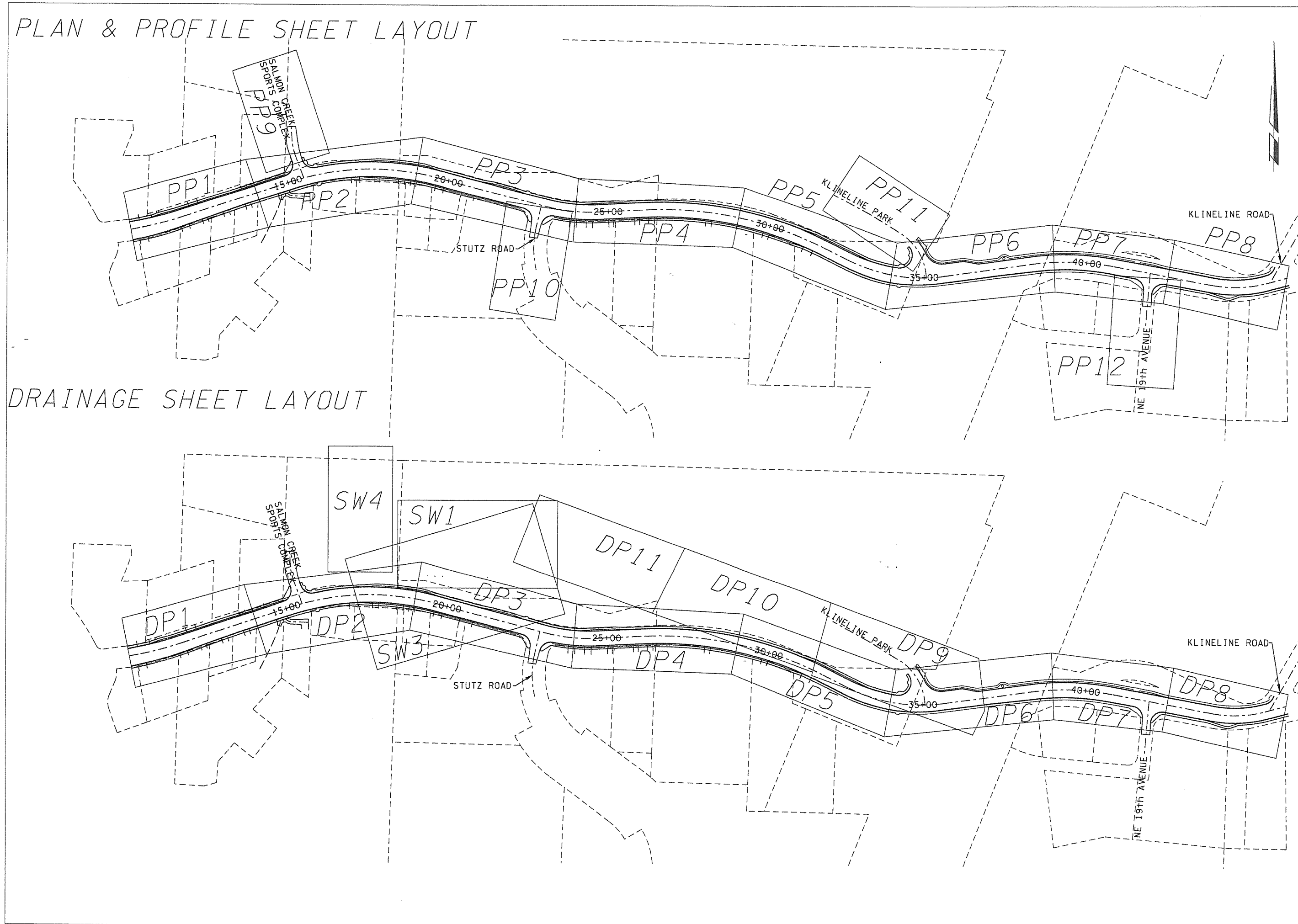

DESIGN & ENGINEERING DIVISION
DESIGN SECTION

NE 117th STREET
SHEET LAYOUT

DESIGNED	ATH/CRB
DRAWN	CRB
CRP	320322
HOR.	1" = 133'
VERT.	N/A
DATE	11/27/03
DWG:	LAY
SHEET	3 OF 78

CALL 48 HOURS BEFORE YOU DIG
1-800-553-4344
"It's the Law"
NORTHWEST UTILITIES NOTIFICATION CENTER

DON B. OWINGS
STATE OF WASHINGTON
EXPIRES SEPT. 25, 2004

proud past, promising future
CLARK COUNTY
WASHINGTON

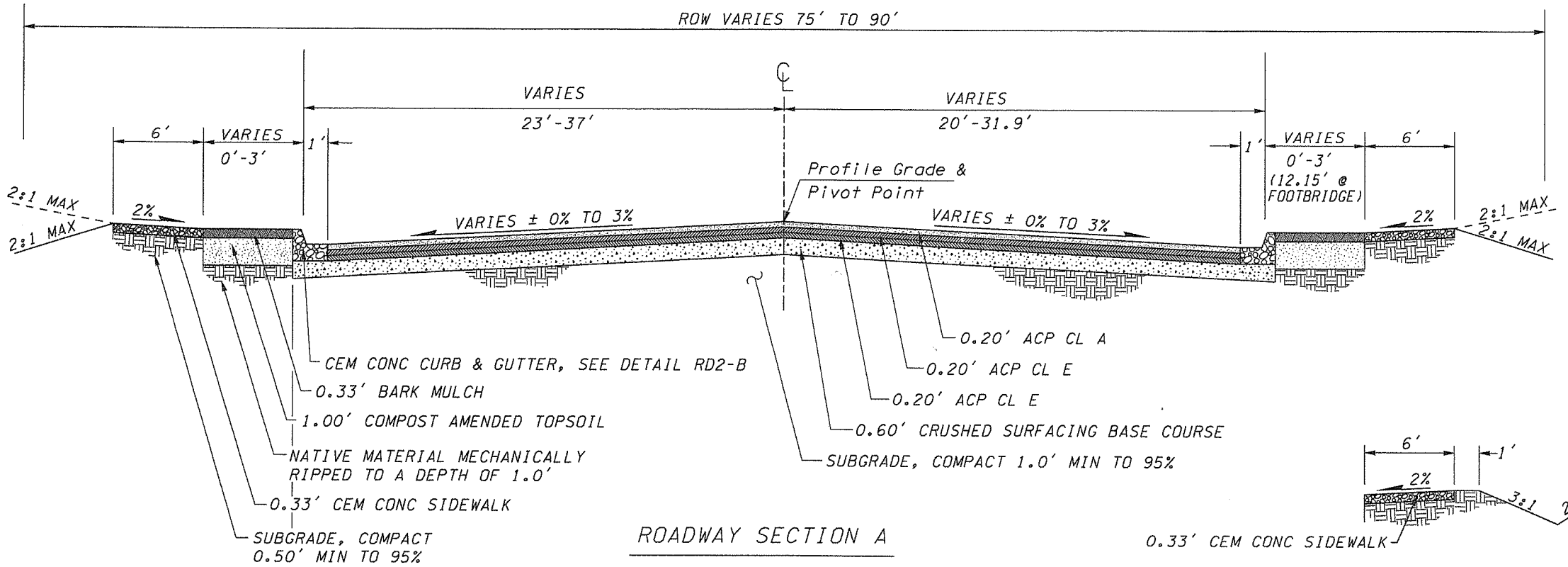

ROADWAY SECTION A

NE 117TH STA 10+00.00 TO 46+22.78

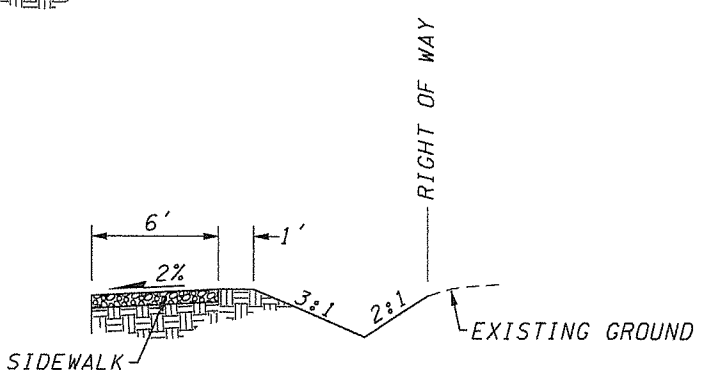

NOTE:
BOTTOM OF DITCH IS 0.50' BELOW SUBGRADE
OR 2.0' BELOW BACK OF SIDEWALK,
WHICHEVER IS LOWER.

NE 117TH STA 10+00.00 TO 10+17.00
NE 117TH STA 10+50.00 TO 11+45.00
NE 117TH STA 11+78.00 TO 12+13.00
NE 117TH STA 12+38.00 TO 12+80.00
NE 117TH STA 13+06.00 TO 13+51.00
NE 117TH STA 13+77.00 TO 14+25.00
NE 117TH STA 15+90.00 TO 16+95.00
NE 117TH STA 23+30.00 TO 23+81.00
NE 117TH STA 24+09.00 TO 24+29.00
NE 117TH STA 24+56.00 TO 26+18.00
NE 117TH STA 26+44.00 TO 27+98.00
NE 117TH STA 28+24.00 TO 29+20.00
NE 117TH STA 30+10.00 TO 31+14.00
NE 117TH STA 31+54.00 TO 33+85.00

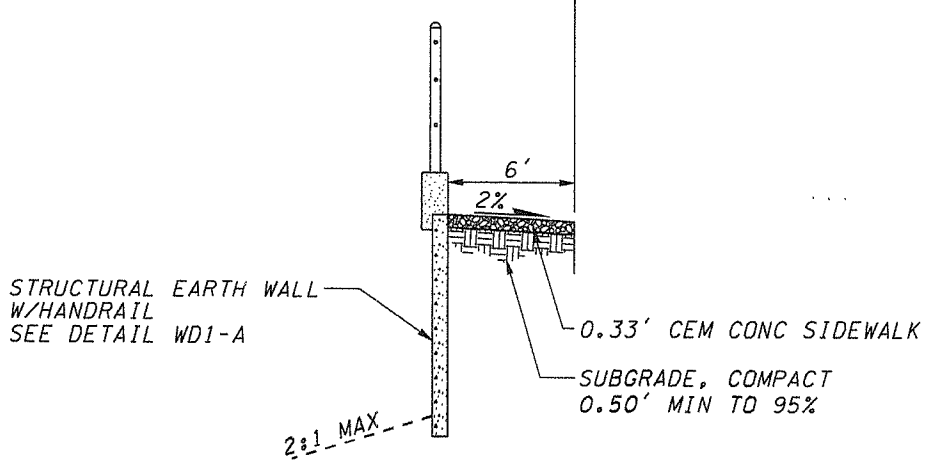

NE 117TH STA 16+03 TO 17+07
NE 117TH STA 19+45 TO 21+15
NE 117TH STA 22+45 TO 24+30
NE 117TH STA 25+60 TO 29+23
NE 117TH STA 30+24 TO 31+70
NE 117TH STA 34+60 TO 35+60
NE 117TH STA 37+95 TO 39+15
NE 117TH STA 42+19 TO 45+43

NOTE:
SEE PLAN/PROFILE SHEETS AND SUPER DIAGRAM
FOR WIDTHS, LOCATIONS, AND SLOPES.

DESIGNED	ATH
DRAWN	CRB
CRP	320322
HOR.	N/A
VERT.	N/A
DATE	9/11/02
DWG:	TS1
SHEET	4 OF 78

CALL 48 HOURS BEFORE YOU DIG
1-800-553-4344
"It's the Law"
NORTHWEST UTILITIES NOTIFICATION CENTER

EXPIRES SEPT. 23, 2002

DESIGN & ENGINEERING DIVISION
DESIGN SECTION

NE 117th STREET
TYPICAL SECTIONS

proud past, promising future
CLARK COUNTY
WASHINGTON

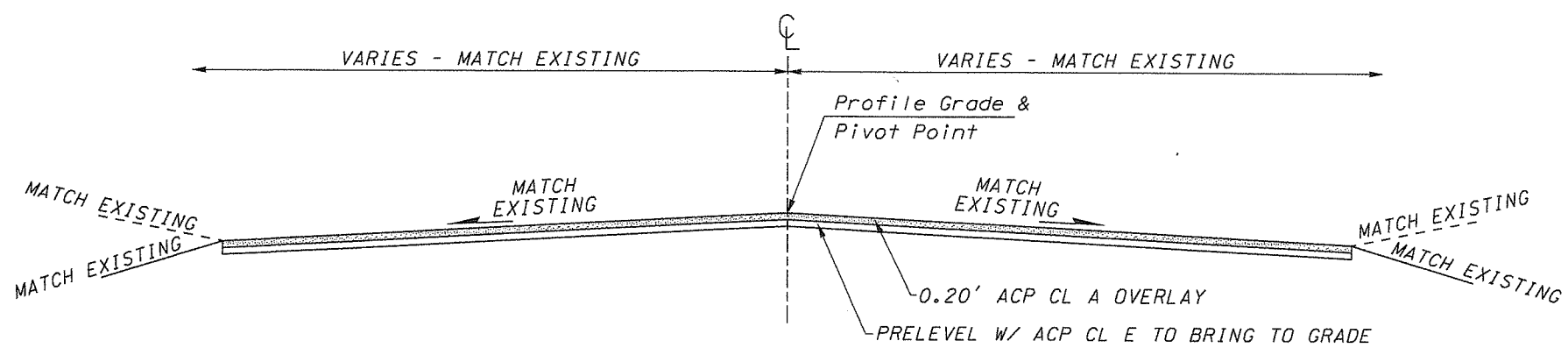

ROADWAY SECTION B

SALMON CREEK SPORTS COMPLEX STA 10+60.00 TO 11+64.00
STUTZ RD STA 10+57.00 TO 11+00.00
LINE PARK STA 11+15.00 TO 12+00.00
NE 19TH AVE STA 10+63.00 TO 11+00.00
NE KLINELINE RD STA 10+00.00 TO 10+63.90

DESIGNED	ATH
DRAWN	CRB
CRP	320322
HOR.	N/A
VERT.	N/A
DATE	11/27/03
DWG:	TS2
SHEET	5 OF 78

CALL 48 HOURS BEFORE YOU DIG
1-800-553-4344
"It's the Law"
NORTHWEST UTILITIES NOTIFICATION CENTER

STATE OF WASHINGTON
NATHAN B. OWINGS
EXPIRES SEPT. 25, 2004

DESIGN & ENGINEERING DIVISION
DESIGN SECTION

NE 117th STREET
TYPICAL SECTIONS

proud past, promising future
CLARK COUNTY
WASHINGTON

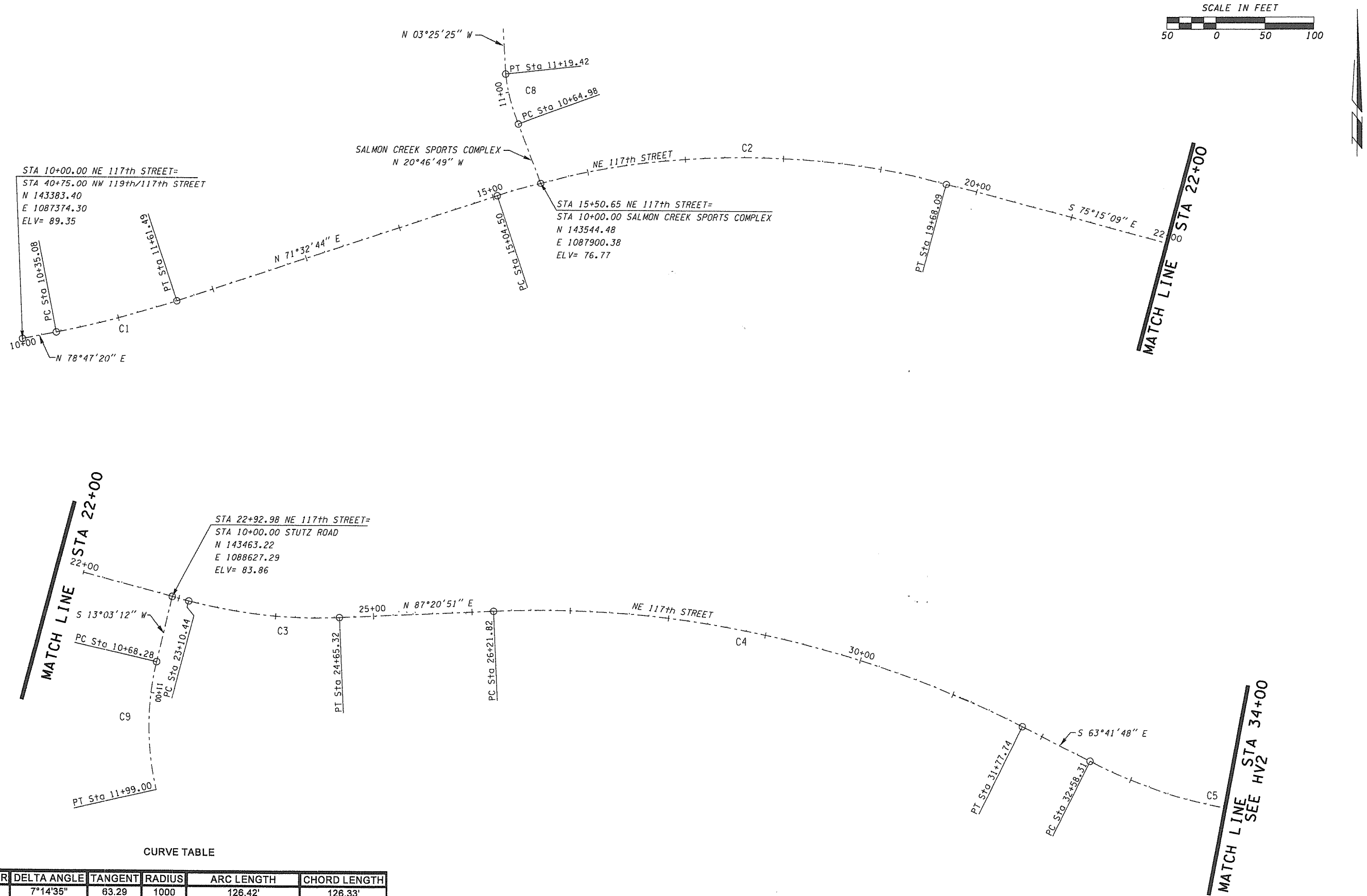

CURVE TABLE

NUMBER	DELTA ANGLE	TANGENT	RADIUS	ARC LENGTH	CHORD LENGTH
C1	7°14'35"	63.29	1000	126.42'	126.33'
C2	33°12'07"	238.51	800	463.59'	457.13'
C3	17°24'00"	78.04	510	154.88'	154.29'
C4	28°57'21"	284.03	1100	555.91'	550.02'
C5	34°07'16"	156.51	510	303.72'	299.25'
C8	15°35'47"	27.39	200	54.44	54.27
C9	26°08'35"	66.52	286	130.72	129.59

NOTE: INSTALL MONUMENT CASE AND COVER AT EACH PC AND PT
SEE DETAIL RD1-B

DESIGNED	ATH
DRAWN	CRB
CRP	320322
HOR.	1" = 50'
VERT.	N/A
DATE	11/27/02
DWG:	HV1
SHEET	6 OF 78

CALL 48 HOURS BEFORE YOU DIG
1-800-553-4344
"It's the Law"
NORTHWEST UTILITIES NOTIFICATION CENTER

DON B. OWINGS
STATE OF WASHINGTON
22344
REGISTERED PROFESSIONAL ENGINEER
EXPIRES: SEPT. 2003 COUNTY

DESIGN & ENGINEERING DIVISION
DESIGN SECTION

NE 117th STREET
HORIZONTAL / VERTICAL CONTROL

proud past, promising future
CLARK COUNTY
WASHINGTON

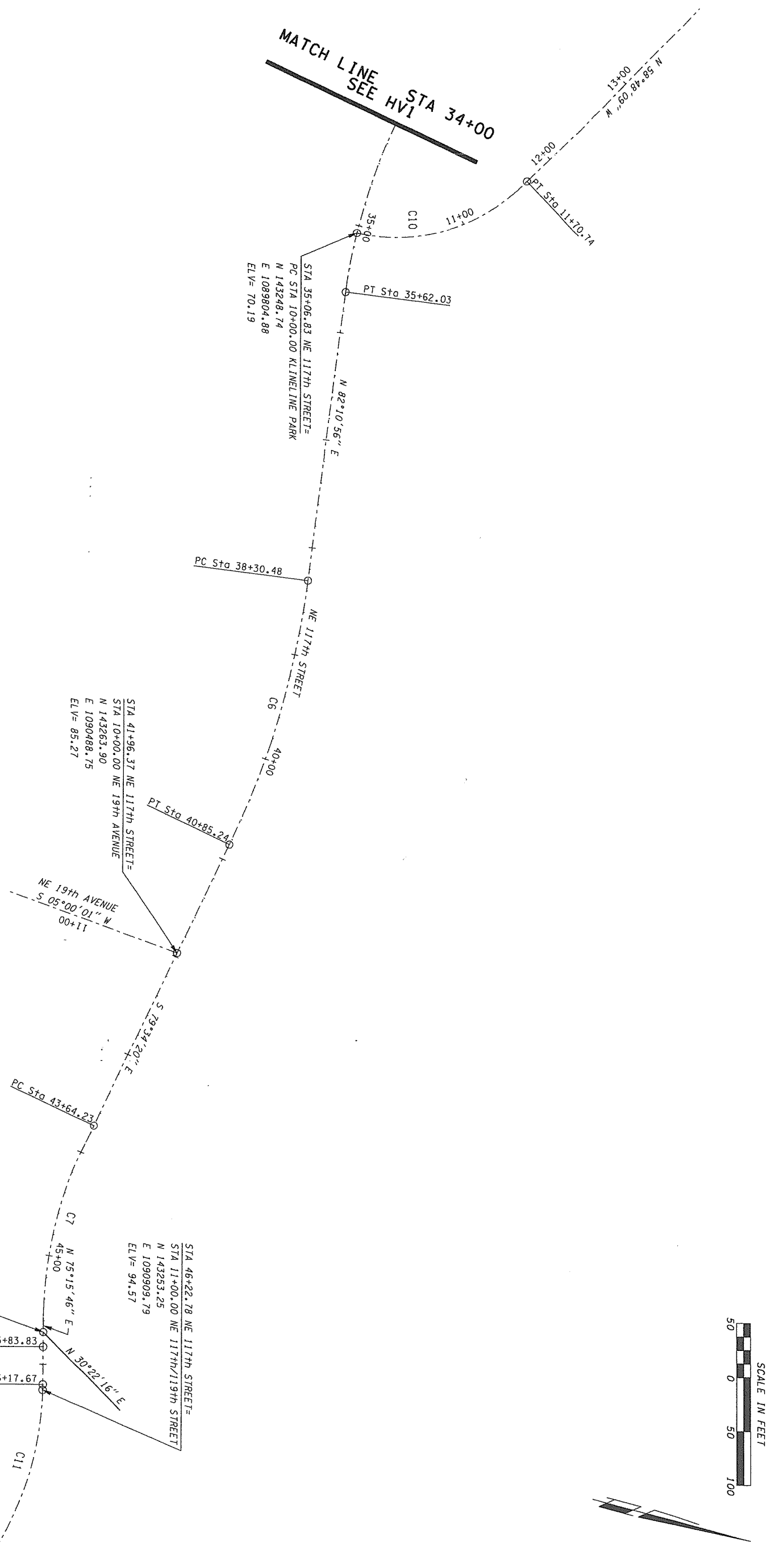

CURVE TABLE

NUMBER	DELTA ANGLE	TANGENT	RADIUS	ARC LENGTH	CHORD LENGTH
C6	18°14'44"	128.46	800	254.75	253.68
C7	25°09'54"	111.60	500	219.61	217.85
C10	59°17'23"	93.9	165	170.74	163.23
C11	33°28'48"	90.23	300	175.30	172.82

NOTE: INSTALL MONUMENT CASE AND COVER AT EACH PC AND PT
SEE DETAIL RDI-B

CLARK COUNTY
WASHINGTON
proud past, promising future

DESIGN & ENGINEERING DIVISION
DESIGN SECTION

NE 117th STREET
HORIZONTAL / VERTICAL CONTROL

DON B. OWINGS
STATE OF WASHINGTON
EXPIRES SEPT. 25, 2004

CALL 48 HOURS BEFORE YOU DIG
1-800-553-4344
"It's the Law"
NORTHWEST UTILITIES NOTIFICATION CENTER

DESIGNED	ATH
DRAWN	CRB
CRP	320322
HOR.	1" = 50'
VERT.	N/A
DATE	11/27/03
DWG:	HV2
SHEET	7 OF 78

LEGEND

- SILT FENCE SEE DETAIL, ED1(A)
- CUT — CUT LINE
- FILL — FILL LINE
- WATTLE SEE DETAIL, ED2(A)
- IP INLET PROTECTION SEE DETAIL, ED1(B)
- DELINEATED WETLAND

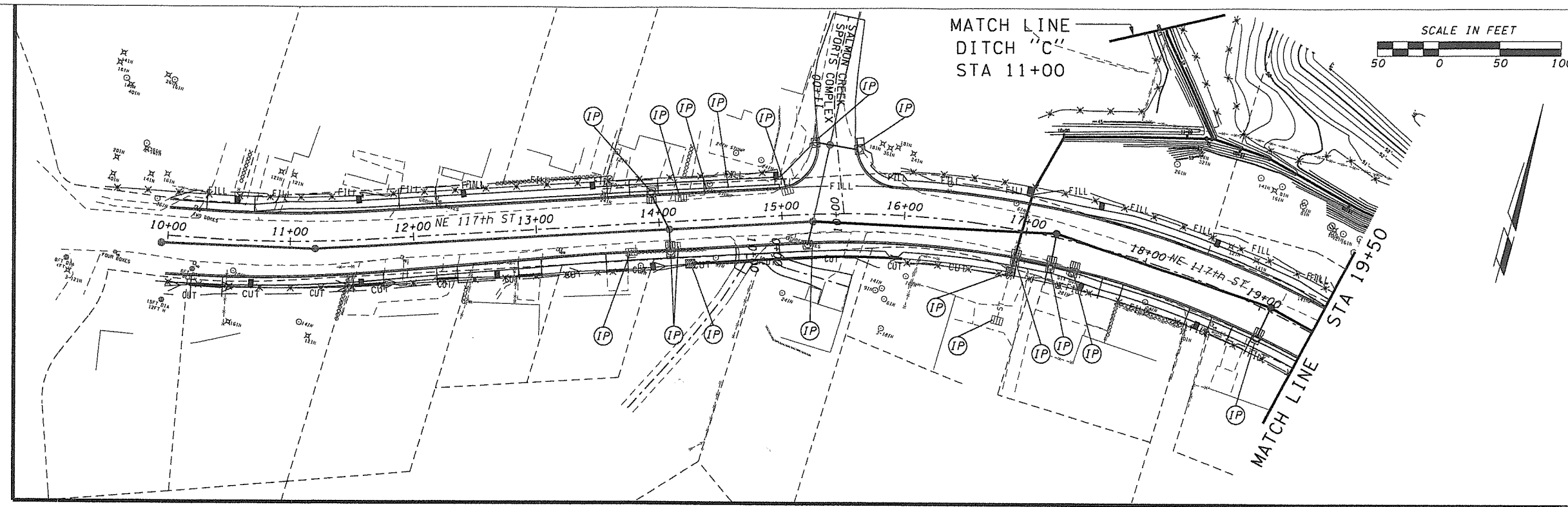

EROSION CONTROL INSPECTION REQUIRED
CALL 397-2375 EXT. 2499
BEFORE YOU BEGIN ANY SITEWORK

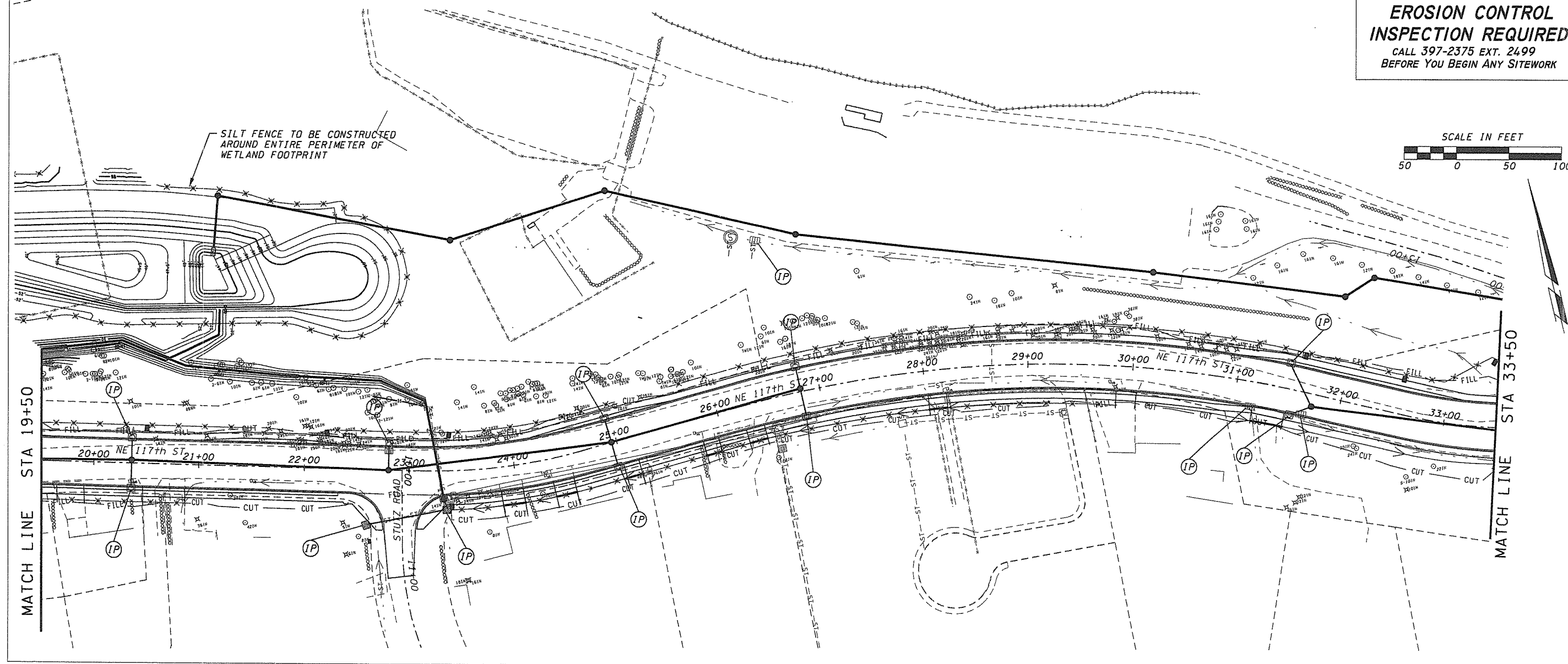

DESIGNED	KAM/JPC
DRAWN	CRB
CRP	320322
HOR.	1" = 50'
VERT.	N/A
DATE	11/27/03
DWG:	EC1
SHEET	8 OF 78

CALL 48 HOURS BEFORE YOU DIG
1-800-553-4344
"It's the Law"
NORTHWEST UTILITIES NOTIFICATION CENTER

STATE OF WASHINGTON
JOHN B. OWINGS
EXPIRES SEPT. 25, 2004

DESIGN & ENGINEERING DIVISION
DESIGN SECTION

NE 117th STREET
EROSION CONTROL PLANS

proud past, promising future
CLARK COUNTY WASHINGTON

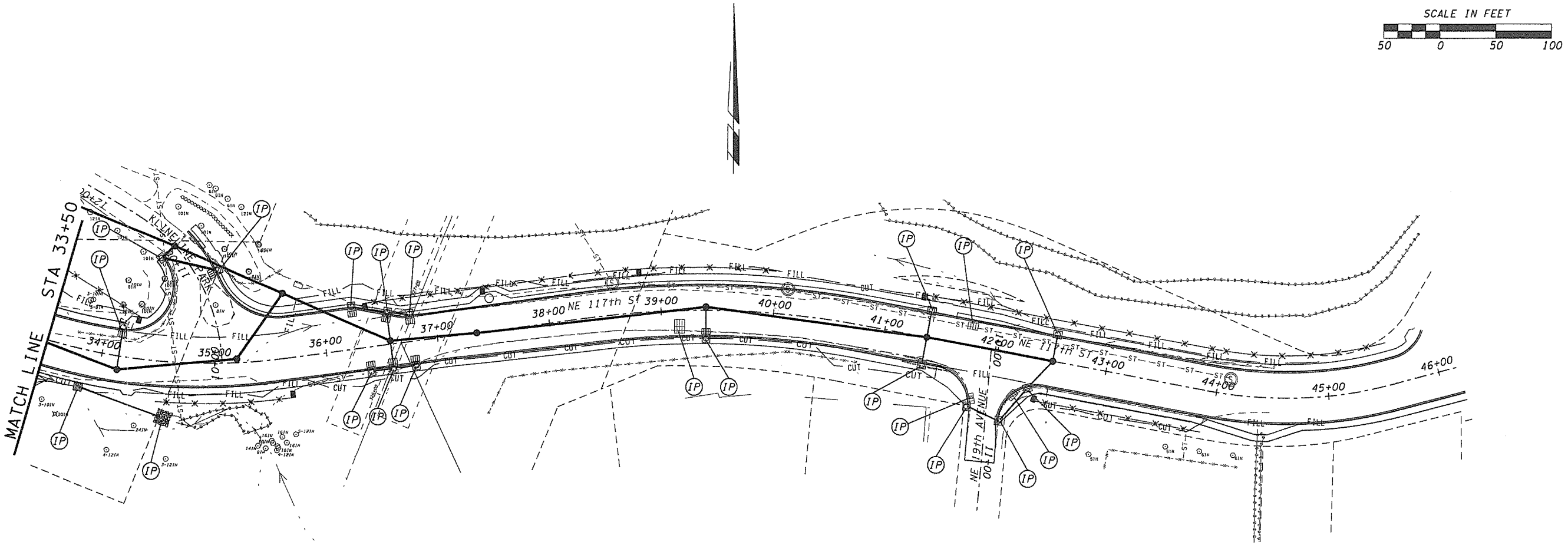

EROSION CONTROL INSPECTION REQUIRED
CALL 397-2375 EXT. 2499
BEFORE YOU BEGIN ANY SITEWORK

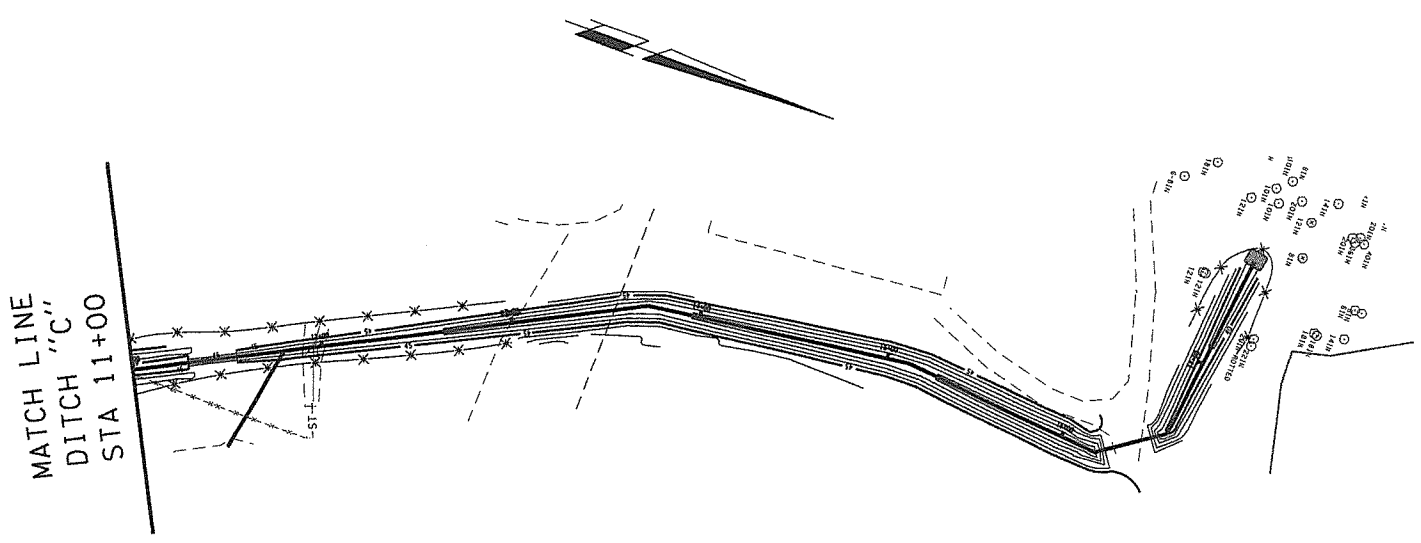

LEGEND

- SILT FENCE-SEE DETAIL, ED1(A)
- CUT — CUT LINE
- FILL — FILL LINE
- WATTLE-SEE DETAIL, ED2(A)
- IP — INLET PROTECTION-SEE DETAIL, ED1(B)
- DELINEATED WETLAND

DESIGNED	KAM/JPG
DRAWN	CRB
CRP	320322
HOR.	1" = 50'
VERT.	N/A
DATE	11/27/03
DWG:	EC2
SHEET	9 OF 78

CALL 48 HOURS BEFORE YOU DIG
1-800-553-4344
"It's the Law"
NORTHWEST UTILITIES NOTIFICATION CENTER

DON B. DOUGLAS
STATE OF WASHINGTON
EXPIRES SEPT. 25, 2004

DESIGN & ENGINEERING DIVISION
DESIGN SECTION

NE 117th STREET
EROSION CONTROL PLANS

proud past, promising future
CLARK COUNTY WASHINGTON

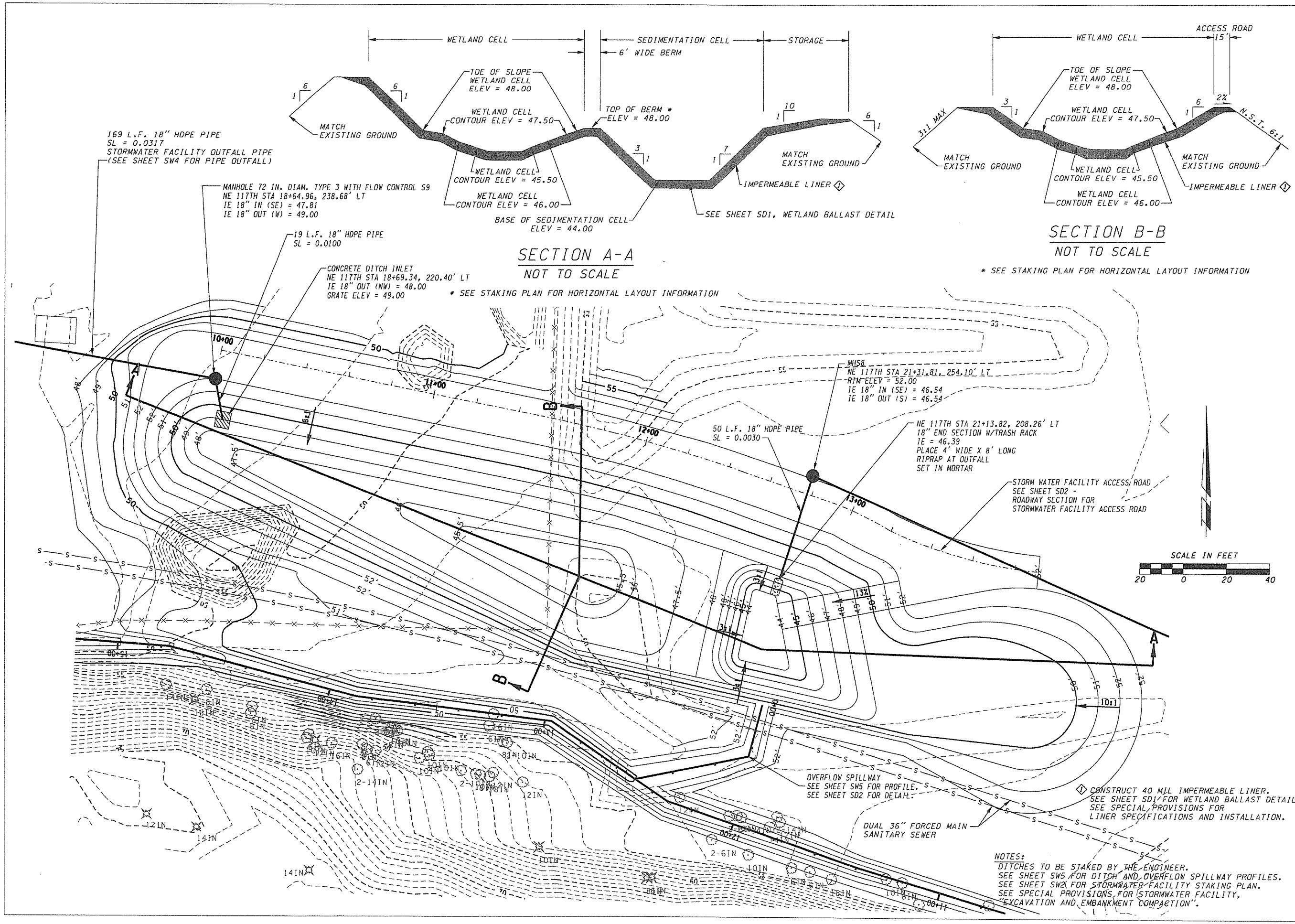

DESIGNED	ATH/KAM
DRAWN	CRB
CRP	320322
HOR.	N/A
VERT.	N/A
DATE	11/27/03
DWG.	SW1
SHEET	10 OF 78

CALL 48 HOURS BEFORE YOU DIG 1-800-553-4344 "It's the Law" NORTHWEST UTILITIES NOTIFICATION CENTER

DAN A. OTTINGER STATE OF WASHINGTON 22000 PROFESSIONAL ENGINEER EXPIRES 09/25/04

DESIGN & ENGINEERING DIVISION
DESIGN SECTION

NE 117TH STREET
STORMWATER FACILITY-WETLAND

proud past, promising future

CLARK COUNTY WASHINGTON

NOTES:

SEE STAKING DATA (THIS SHEET) FOR FOR STORMWATER FACILITY LAYOUT.
SEE SHEET SW1 FOR OVERFLOW SPILLWAY ALIGNMENT.
SEE SHEET SW5 FOR OVERFLOW SPILLWAY PROFILE.
SEE SHEET SD2 FOR SPILLWAY DETAIL.
SEE SPECIAL PROVISIONS FOR STORMWATER FACILITY, "EXCAVATION AND EMBANKMENT COMPACTION".

CURVE TABLE

NUMBER	PC	PT	RADIUS	DELTA	ARC LENGTH
1	S3	S4	19.00	54° 55' 17"	18.21
2	S4	S5	215.00	06° 40' 36"	25.40
3	S6	S7	745.00	07° 18' 59"	95.03
4	S8	S9	36.70	138° 16' 49"	88.73
5	S14	S15	41.70	163° 22' 23"	118.84
6	S16	S17	19.00	90° 00' 00"	29.85
7	S18	S19	71.30	36° 27' 16"	45.38
8	S19	S20	21.70	149° 39' 35"	56.63
9	S22	S23	5.00	113° 31' 07"	9.91
10	S24	S25	14.00	90° 00' 00"	21.99
11	S26	S27	15.00	96° 20' 52"	25.22
12	S30	S31	2.00	60° 08' 08"	2.10
13	S34	S35	2.00	113° 31' 06"	3.96
14	S36	S37	2.00	90° 00' 00"	3.14
15	S38	S39	2.00	96° 20' 52"	3.36
16	S41	S42	6.50	132° 01' 29"	15.06
17	S44	S45	13.00	180° 19' 26"	40.91
18	S46	S47	3.80	172° 31' 19"	11.56
19	S48	S49	7.00	113° 31' 09"	13.87
20	S50	S51	7.00	60° 07' 59"	7.35
P1	11+50.04	12+46.61	756.35	07° 34' 31"	96.58
P2	12+91.46	13+19.30	163.43	09° 45' 40"	27.84
P3	13+19.96	13+90.73	207.44	19° 32' 59"	70.78

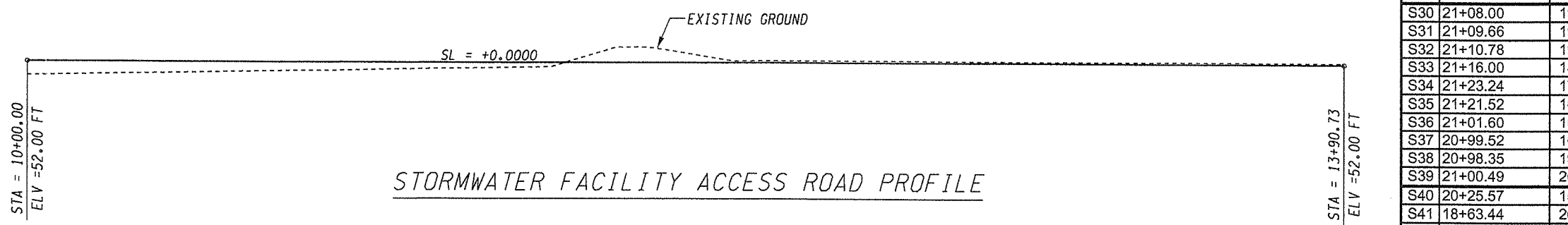

STORMWATER FACILITY ACCESS ROAD PROFILE

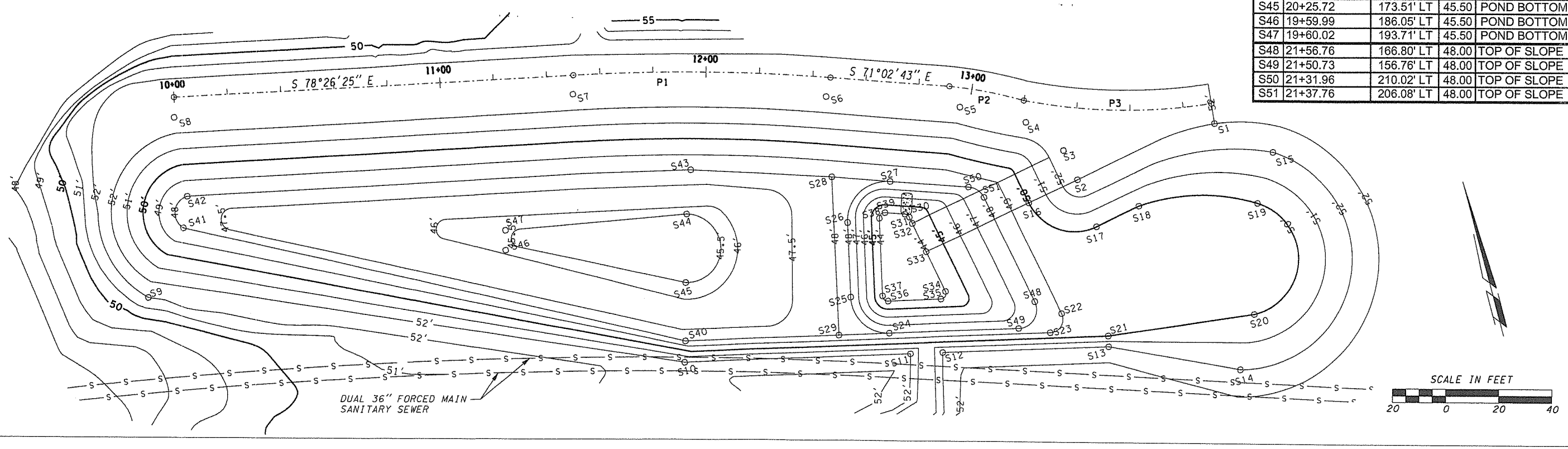

POND GRADING POINTS-SHOWN TO FINISHED GRADE

PNT	117th STA	OFFSET	ELEV	DESC
S1	22+24.37	234.07' LT	52.00	TOP OF SLOPE
S2	21+72.85	212.94' LT	52.00	TOP OF SLOPE
S3	21+67.62	223.75' LT	52.00	TOP OF SLOPE
S4	21+53.55	234.29' LT	52.00	TOP OF SLOPE
S5	21+28.77	239.84' LT	52.00	TOP OF SLOPE
S6	20+78.43	243.70' LT	52.00	TOP OF SLOPE
S7	19+83.43	244.63' LT	52.00	TOP OF SLOPE
S8	18+64.99	244.70' LT	52.00	TOP OF SLOPE
S9	18+49.87	178.70' LT	52.00	TOP OF SLOPE
S10	20+25.26	143.75' LT	52.00	TOP OF SLOPE
S11	21+10.01	147.10' LT	52.00	TOP OF SLOPE
S12	21+22.18	147.61' LT	52.00	TOP OF SLOPE
S13	21+84.47	150.10' LT	52.00	TOP OF SLOPE
S14	22+33.96	141.74' LT	52.00	TOP OF SLOPE
S15	22+46.30	223.29' LT	52.00	TOP OF SLOPE
S16	21+54.58	204.11' LT	50.00	TOE OF SLOPE
S17	21+79.96	195.28' LT	50.00	TOE OF SLOPE
S18	21+95.88	202.97' LT	50.00	TOE OF SLOPE
S19	22+40.48	204.16' LT	50.00	TOE OF SLOPE
S20	22+39.21	162.33' LT	50.00	TOE OF SLOPE
S21	21+84.31	154.10' LT	50.00	TOE OF SLOPE
S22	21+66.82	162.40' LT	49.00	TOE OF SLOPE
S23	21+62.52	155.23' LT	49.00	TOE OF SLOPE
S24	21+02.08	154.82' LT	48.00	BERM
S25	20+87.53	168.25' LT	48.00	BERM
S26	20+86.40	196.55' LT	48.00	BERM
S27	21+02.46	212.11' LT	48.00	BERM
S28	20+80.50	213.74' LT	48.00	BERM
S29	20+83.10	154.06' LT	48.00	BERM
S30	21+08.00	199.69' LT	44.00	POND BOTTOM
S31	21+09.66	198.57' LT	44.00	POND BOTTOM
S32	21+10.78	196.30' LT	44.00	POND BOTTOM
S33	21+16.00	185.46' LT	44.00	POND BOTTOM
S34	21+23.24	170.47' LT	44.00	POND BOTTOM
S35	21+21.52	167.61' LT	44.00	POND BOTTOM
S36	21+01.60	166.81' LT	44.00	POND BOTTOM
S37	20+99.52	168.73' LT	44.00	POND BOTTOM
S38	20+98.35	198.15' LT	44.00	POND BOTTOM
S39	21+00.49	200.22' LT	44.00	POND BOTTOM
S40	20+25.57	151.77' LT	48.00	TOE OF SLOPE
S41	18+63.44	203.10' LT	48.00	TOE OF SLOPE
S42	18+65.80	214.67' LT	48.00	TOE OF SLOPE
S43	20+27.69	216.26' LT	48.00	TOE OF SLOPE
S44	20+26.13	199.51' LT	45.50	POND BOTTOM
S45	20+25.72	173.51' LT	45.50	POND BOTTOM
S46	19+59.99	186.05' LT	45.50	POND BOTTOM
S47	19+60.02	193.71' LT	45.50	POND BOTTOM
S48	21+56.76	166.80' LT	48.00	TOP OF SLOPE
S49	21+50.73	156.76' LT	48.00	TOP OF SLOPE
S50	21+31.96	210.02' LT	48.00	TOP OF SLOPE
S51	21+37.76	206.08' LT	48.00	TOP OF SLOPE

DESIGNED ATH/KAM
DRAWN CRB
CRP 320322
HOR. N/A
VERT. N/A
DATE 11/27/03
DWG. SW2
SHEET 11 OF 78

CALL 48 HOURS BEFORE YOU DIG
1-800-553-4344
"It's the Law"
NORTHWEST UTILITIES NOTIFICATION CENTER

DON LOVINGS
STATE OF WASHINGTON
REGISTERED PROFESSIONAL ENGINEER
EXPIRES 09/25/06

DESIGN & ENGINEERING DIVISION
DESIGN SECTION

NE 117TH STREET
STORMWATER FACILITY-STAKING PLAN

proud past, promising future
CLARK COUNTY
WASHINGTON

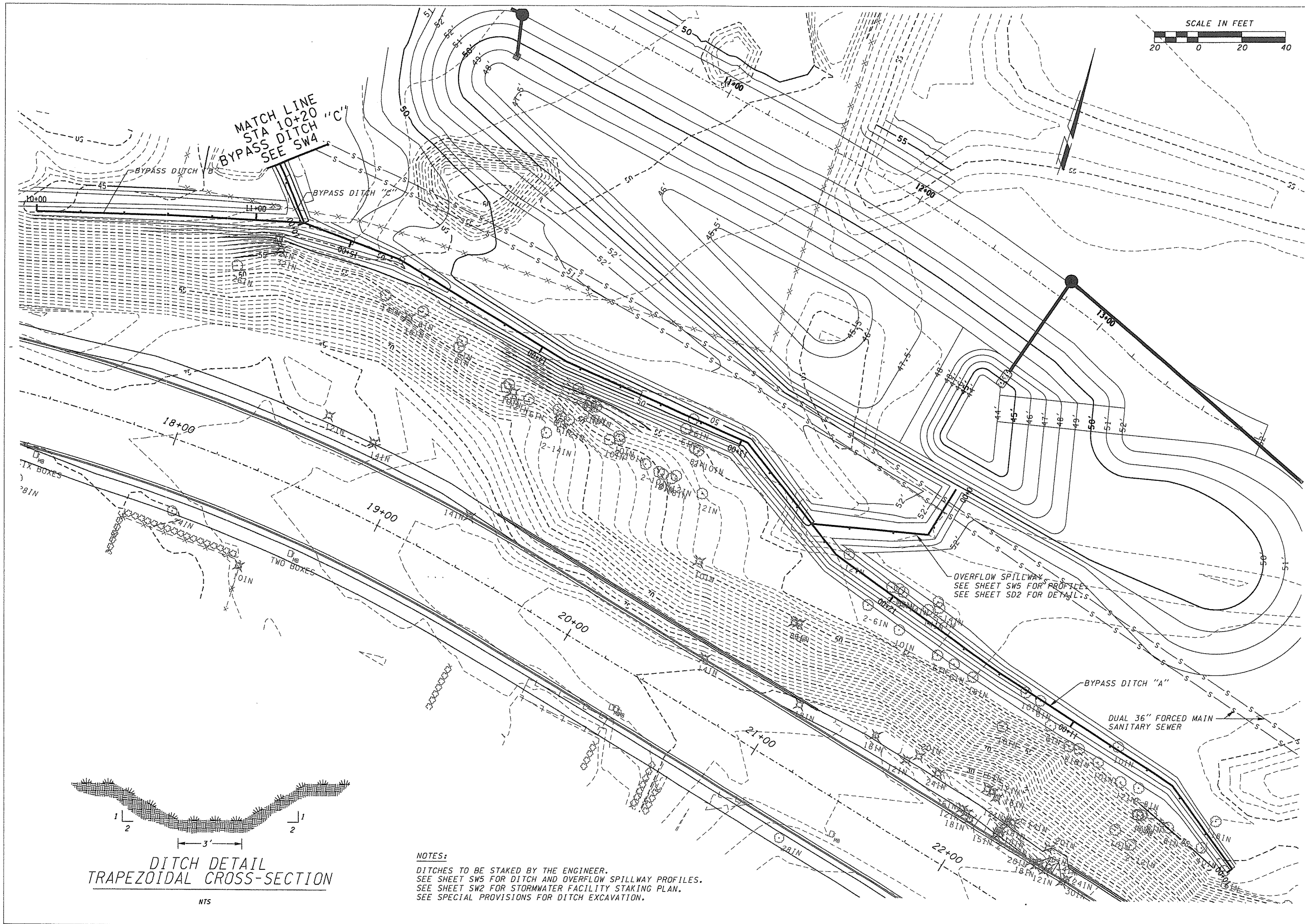

DITCH DETAIL
TRAPEZOIDAL CROSS-SECTION

NTS

NOTES:

DITCHES TO BE STAKED BY THE ENGINEER.
SEE SHEET SW5 FOR DITCH AND OVERFLOW SPILLWAY PROFILES.
SEE SHEET SW2 FOR STORMWATER FACILITY STAKING PLAN.
SEE SPECIAL PROVISIONS FOR DITCH EXCAVATION.

DESIGNED	ATH/KAM
DRAWN	CRB
CRP	320322
HOR.	N/A
VERT.	N/A
DATE	11/27/03
DWG:	SW3
SHEET	12 OF 78

CALL 48 HOURS BEFORE YOU DIG
1-800-553-4344
"It's the Law"
NORTHWEST UTILITIES NOTIFICATION CENTER

DON D. GWINGS
STATE OF WASHINGTON
30306
REGISTERED PROFESSIONAL ENGINEER
EXPIRES 09/25/04

DESIGN & ENGINEERING DIVISION
DESIGN SECTION

NE 117TH STREET
STORMWATER FACILITY-OFFSITE BYPASS

proud past, promising future

CLARK COUNTY
WASHINGTON

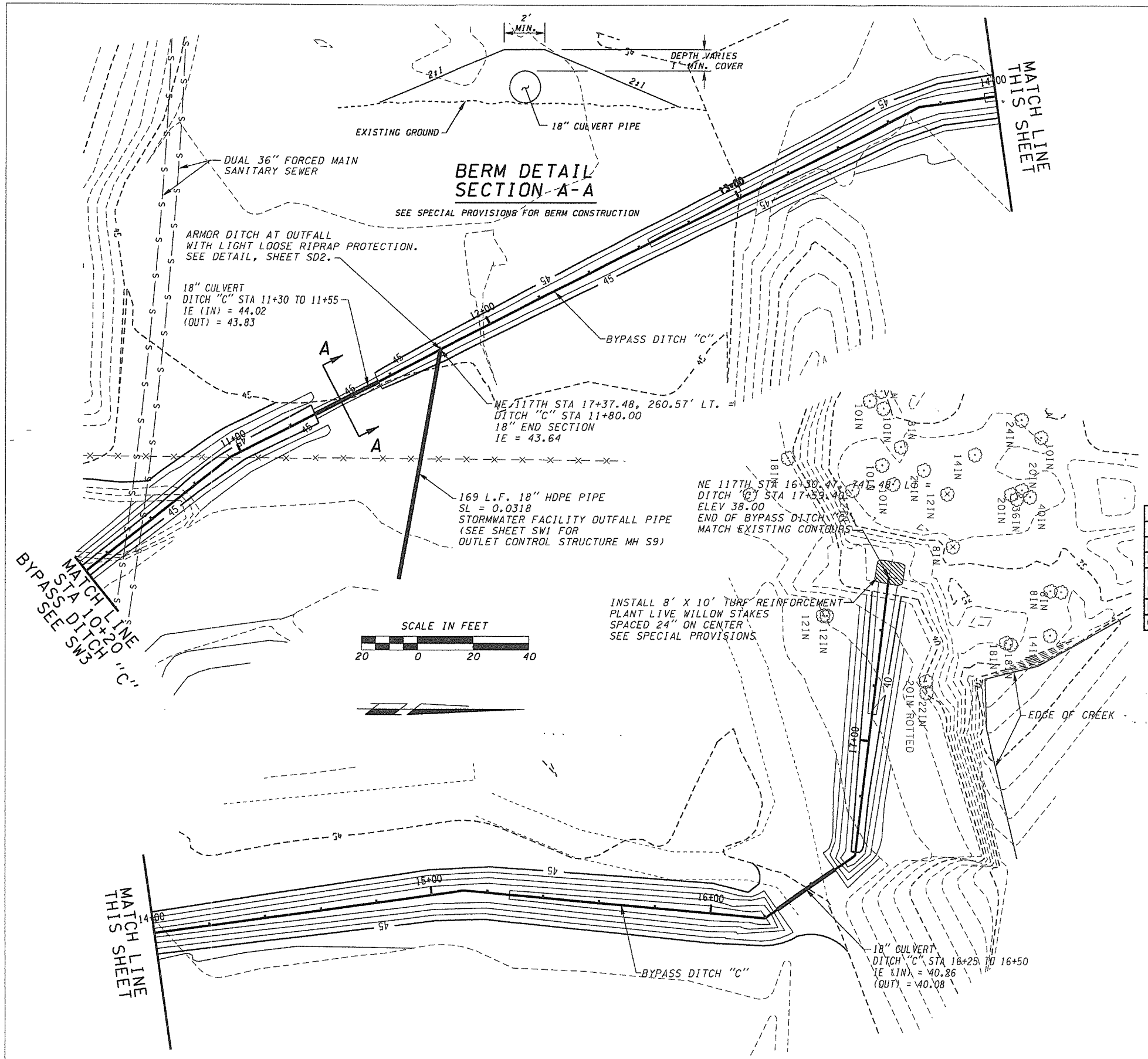

Bypass Ditch "A"			
From STA	to STA	Distance (feet)	Bearing
10+00.00	10+46.58	46.58	N 52°43'16" W
10+46.58	11+39.70	93.13	N 73°46'38" W
11+39.70	12+32.08	92.38	N 71°04'06" W
12+32.08	12+96.91	64.83	N 55°16'36" W
12+96.91	13+87.15	90.24	N 82°54'31" W
13+87.15	14+76.51	89.36	N 75°18'18" W
14+76.51	15+23.17	46.66	N 85°53'56" W

Bypass Ditch "B"			
From STA	to STA	Distance (feet)	Bearing
10+00.00	10+60.82	60.82	N 74°52'14" E
10+60.82	11+21.90	61.08	N 76°17'50" E

Bypass Ditch "C"			
From STA	to STA	Distance (feet)	Bearing
10+00.00	10+95.63	95.63	N 38°27'14" W
10+95.63	13+72.22	276.59	N 27°12'40" W
13+72.22	15+11.62	139.4	N 7°55'52" W
15+11.62	16+19.61	107.99	N 5°06'34" E
16+19.61	16+58.78	39.17	N 34°57'00" W
16+58.78	17+59.43	100.65	N 83°12'54" W

Overflow Spillway			
From STA	to STA	Distance (feet)	Bearing
0+00.00	0+24.19	24.19	S 14°58'03.54" W
0+24.19	0+77.41	53.22	S 78°20'40.03" W

Coordinates for Beginning and End Points of Ditches			
Ditch Location	Northing	Easting	Elevation
Ditch "A", STA 10+00.00	143524.15	1088664.45	52.00
Ditch "B", STA 10+00.00	143652.08	1088056.71	45.70
Ditch "A" and "B" endpoint= Ditch "C", STA 10+00.00	143682.42	1088174.77	45.00
Ditch"C"Outfall,STA17+59.43	144292.92	1087856.82	38.00
Overflow Spillway	143652.68	1088494.23	51.00

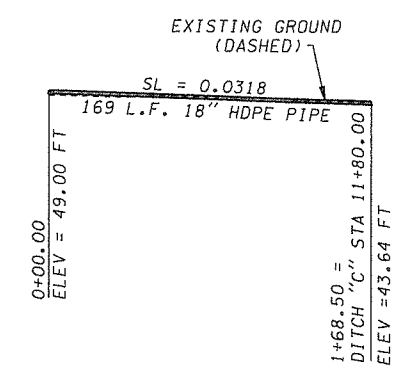

STORMWATER FACILITY
OUTLET PIPE PROFILE

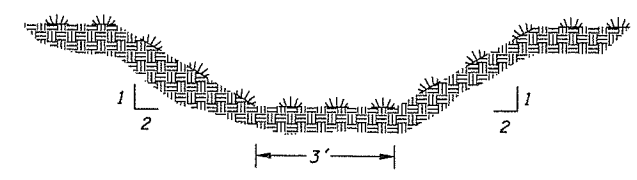

BYPASS DITCH DETAIL
TRAPEZOIDAL CROSS-SECTION

NTS

NOTES:
DITCHES TO BE STAKED BY THE ENGINEER.
SEE SHEET SW5 FOR DITCH PROFILES.
SEE SPECIAL PROVISIONS FOR DITCH EXCAVATION.

DESIGNED	ATH/KAM
DRAWN	CRB
CRP	320322
HOR.	N/A
VERT.	N/A
DATE	11/21/03
DWG#	SW4
SHEET	13 OF 78

CALL 48 HOURS BEFORE YOU DIG 1-800-553-4344 "It's the Law" NORTHWEST UTILITIES NOTIFICATION CENTER

DON R. OTTINGER STATE OF WASHINGTON 22000 PROFESSIONAL ENGINEER EXPIRES 09/25/04

DESIGN & ENGINEERING DIVISION
DESIGN SECTION

NE 117TH STREET
STORMWATER FACILITY-OFFSITE BYPASS

proud past, promising future
CLARK COUNTY WASHINGTON

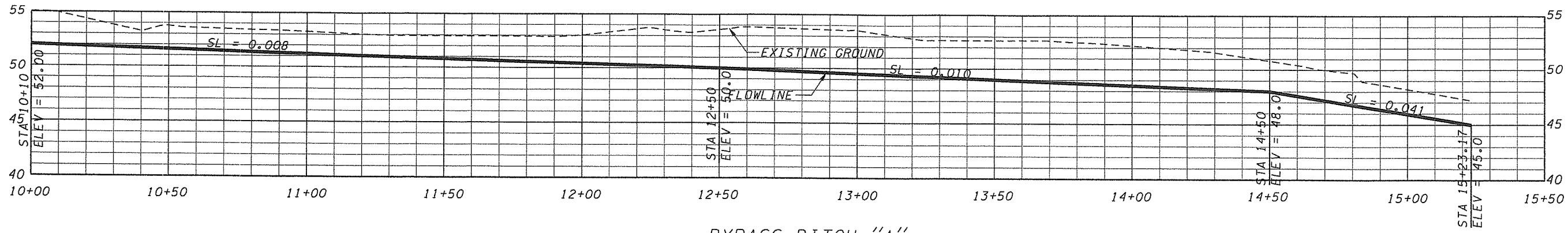

BYPASS DITCH "A"

SEE SHEET SW3 FOR DITCH "A" ALIGNMENT

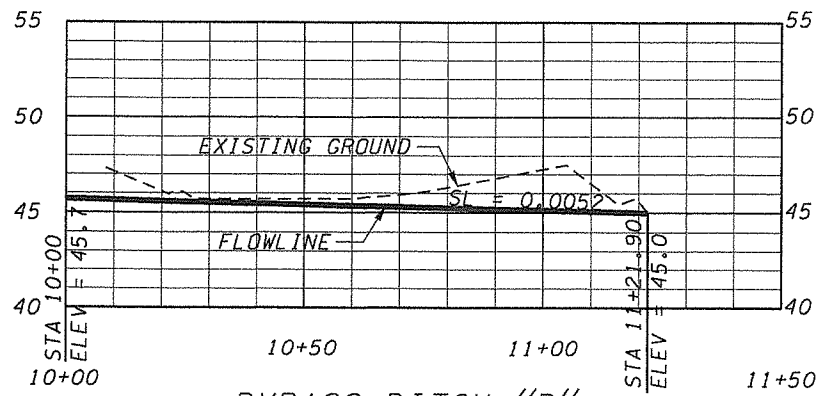

BYPASS DITCH "B"

SEE SHEET SW3 FOR DITCH "B" ALIGNMENT

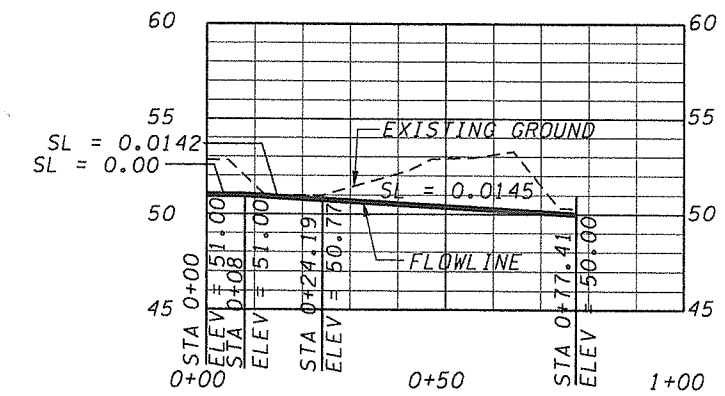

OVERFLOW SPILLWAY

SEE SHEET SW3 FOR OVERFLOW SPILLWAY ALIGNMENT
SEE SHEET SD2 FOR OVERFLOW SPILLWAY DETAIL

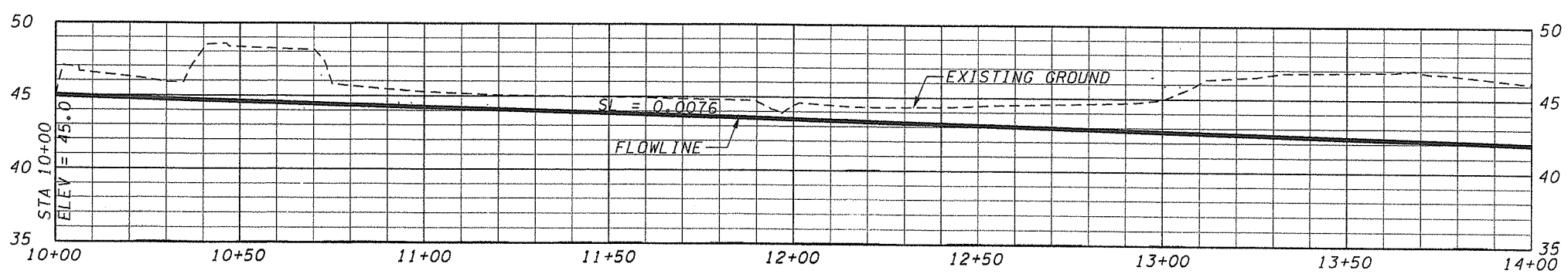

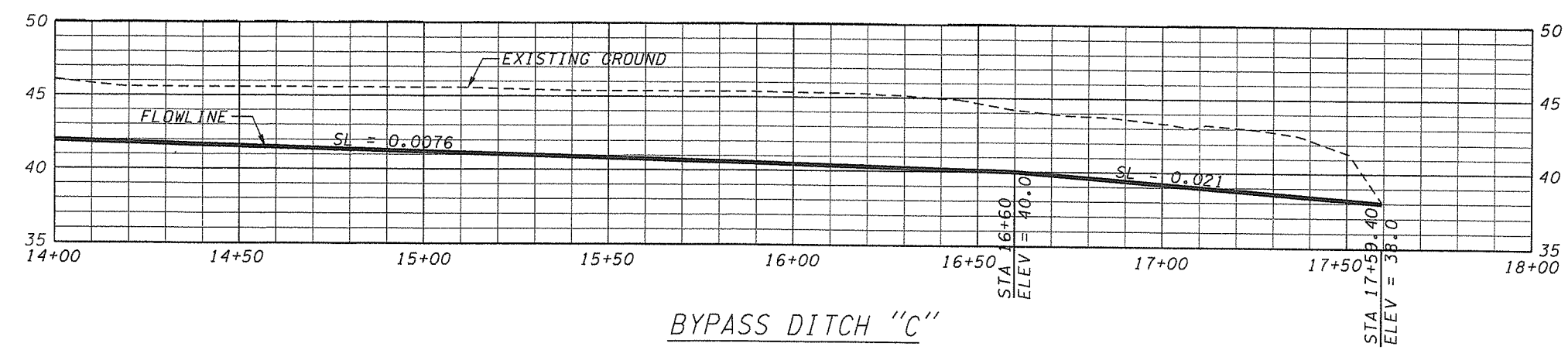

BYPASS DITCH "C"

SEE SHEET SW3 AND SW4 FOR DITCH "C" ALIGNMENT

DESIGNED ATH/KAM
DRAWN CRB
CRP 320322
HOR. N/A
VERT. N/A
DATE 11/27/03
DWG. SW5
SHEET 14 OF 78

CALL 48 HOURS BEFORE YOU DIG
1-800-553-4344
"It's the Law"
NORTHWEST UTILITIES NOTIFICATION CENTER

DON B. ORWIGS
STATE OF WASHINGTON
EXPIRES SEPT. 25, 2004

DESIGN & ENGINEERING DIVISION
DESIGN SECTION

NE 117TH STREET
STORMWATER FACILITY-OFFSITE BYPASS

proud past, promising future
CLARK COUNTY
WASHINGTON

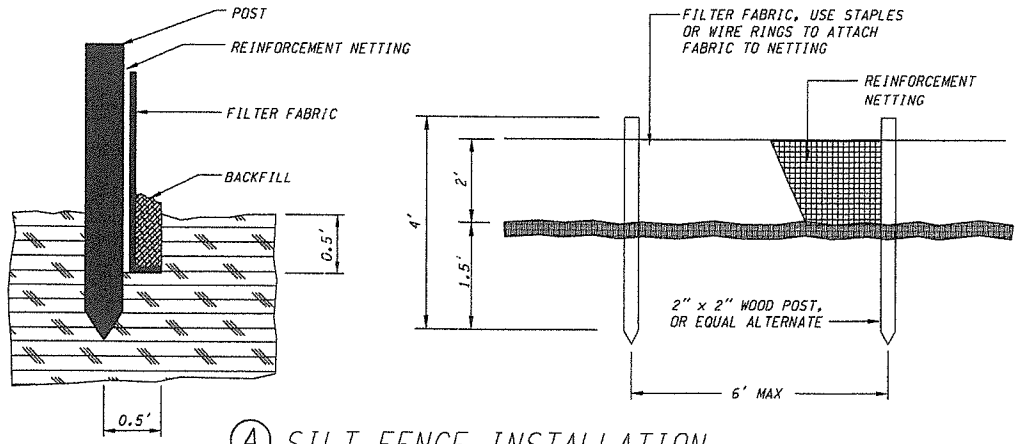

(A) SILT FENCE INSTALLATION

NTS

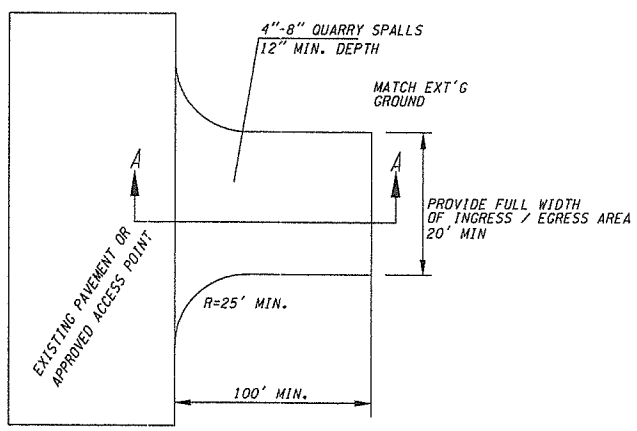

(C) STABILIZED CONSTRUCTION ENTRANCE

NTS

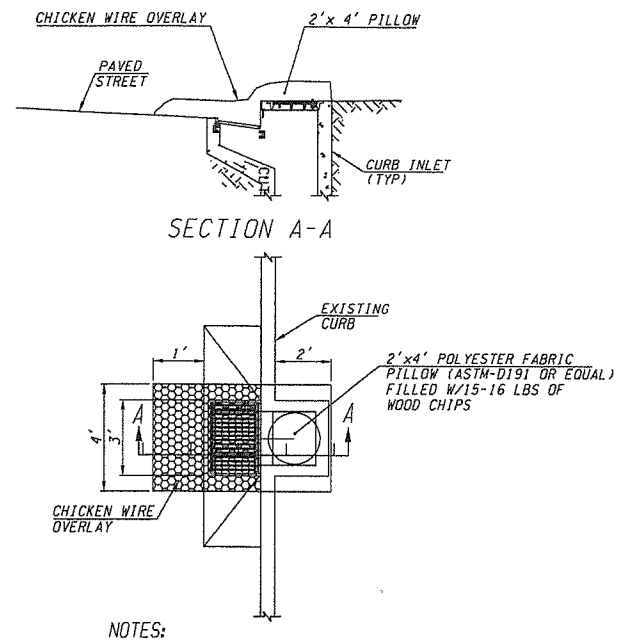

NOTES:

1. STRAWBALES MAY BE SUBSTITUTED, BUT ONLY BEFORE STREETS ARE PAVED.
2. ONCE STREETS ARE PAVED THIS METHOD OR EQUIVALENT MUST BE USED

COMBINATION CURB INLET SILT BARRIER

NTS

(B) INLET PROTECTION

NTS

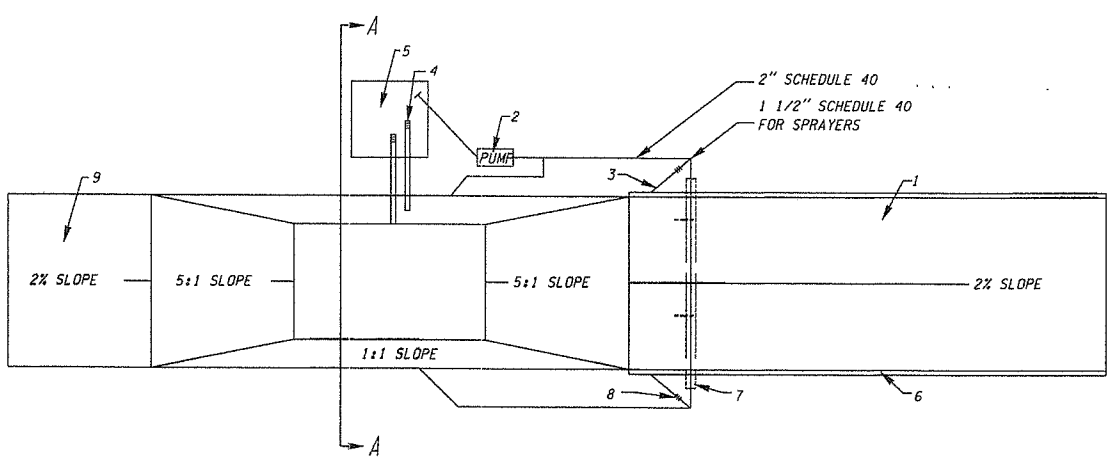

(D) TIRE WASH PLAN

NTS

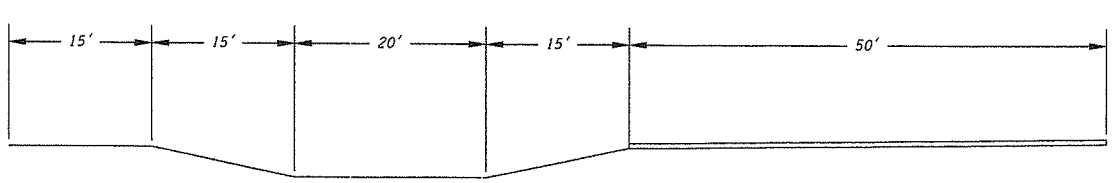

ELEVATION VIEW

NTS

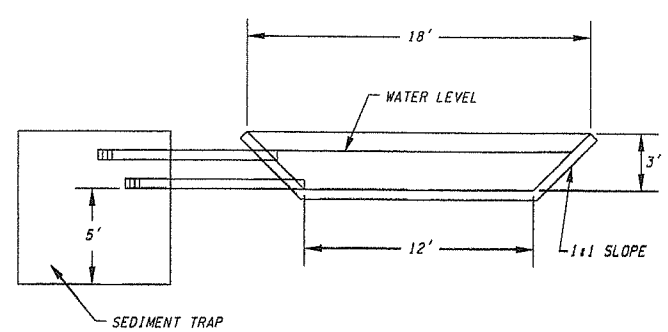

SECTION A-A

NTS

Recirculating Tire Wash Notes:

1. Asphalt construction entrance 6 in. asphalt concrete.
2. 3-inch trash pump with floats on the suction hose.
3. Midpoint spray nozzles, if needed.
4. 6-inch sewer pipe with butterfly valves. Bottom one is a drain. Locate top pipe's invert 1 foot above bottom of wheel wash.
5. 8 foot x 8 foot sump with 5 feet of catch. Build so can be cleaned with trackhoe.
6. Asphalt curb on the low road side to direct water back to pond.
7. 6-inch sleeve under road.
8. Ball valves.
9. 15 foot. asphalt concrete apron to protect ground from splashing water.
10. The recirculating tire wash plan is a general schematic. Details for the installation are left to the contractor. The tire wash must prevent tracking and recirculate the wash water to minimize water use.

STANDARD NOTES FOR EROSION CONTROL PLAN

1. The Contractor shall install and maintain BMP's as shown and perform all actions necessary to prevent erosion, and control sediment from leaving the construction site. Site Contractor shall comply with Clark County Code Chapter 13 .29, Article IV.

2. All erosion control measures shall be in-place and in working condition prior to disturbing and exposing any soil surfaces (i.e. silt fence, construction entrance, sedimentation barriers, sedimentation traps).

3. All erosion prevention and control BMP's shall be maintained and repaired as needed to insure continued performance of their intended function. Needed repairs shall be made as soon as practicable. They are to remain in place and operational during all phases of construction. Construction activities shall not continue or resume until repairs to erosion control facilities are made and the facilities are functional. Any sediment leaving the site or discharging to a sensitive area shall be stopped and controlled immediately. Contaminated areas shall be cleaned and restored.

4. Clearing limits and work area limits shall be delineated and marked. Do not disturb more area than needed for construction requirements.

5. All sensitive or critical areas (wetlands, steep slopes, natural waterways), and buffers shall all be clearly delineated and clearly marked, and protected from sediment deposition.

6. Sediment laden runoff shall be prevented from entering all existing storm water catch basins and inlets affected by construction.

7. No exposed, bare soils shall remain unstabilized for more than two days during the period October 1 thru April 30 or for more than seven days during the period of May 1 through September 30. All disturbed soil surfaces shall be stabilized by a suitable application of "Best Management Practices".

8. Where feasible, no more than 500 feet of trench shall be open at one time. Excavated material shall be placed on the up-hill side of trenches provided it does not conflict with safety requirements.

9. Dewatering devices shall discharge into a sediment trap or sediment pond. No discharge shall be made to a paved street or stormwater collection system without first removing sediment.

10. Cut and fill slopes shall be constructed in a manner that will minimize erosion. Erosion shall be controlled and prevented by such measures as roughening the surface, installation of interceptor ditches, terracing, covering with matting, mulch or plastic sheeting. Runoff shall be prevented from entering a slope and from undercutting the base of slopes.

11. Any soil or debris transported onto roadways and sidewalks shall be removed. Deposits shall be completely removed by shoveling and/or sweeping. Washing shall not be utilized unless specifically approved in writing by the County.

12. All permanent infiltration systems shall be isolated and protected from sediment laden runoff entering to avoid risk of reducing the ability of the systems to infiltrate. Isolation and protection shall not be removed until the drainage area tributary to the system is completely stabilized.

13. All conveyance channels, both temporary and permanent shall be stabilized to prevent erosion of the channel. Stabilization shall extend to areas at outlets and downstream reaches vulnerable to erosion resulting from flow discharging from the channel.

14. If BMP's shown are utilized but are insufficient to prevent sediment from reaching water bodies, adjacent properties, or public rights-of-way; additional BMP's shall be implemented immediately to prevent further encroachment of sediment.

15. Stabilized areas shall be provided for employee parking and storage of construction materials. Erodeable stockpiles of earthen materials, such as topsoil, silty and clayey soils; and landscape materials, shall be covered when not being incorporated in the work. Erosion control BMP's shall be utilized as necessary to prevent sediment laden runoff from leaving or sediment being transported from these areas from vehicle activity.

16. All pollutants other than sediment that occur during construction shall be handled and disposed of in a manner that does not cause contamination of storm water.

17. The Contractor shall keep an inspection log of the condition of the erosion control facilities. Erosion control facilities shall be inspected at least weekly and after each rainfall. The inspection log shall be kept at the project site at a designated location and shall be available for review by the County. An individual that has successfully completed the County's Erosion Control Certification course shall perform inspections and maintain the log.

18. All temporary BMP's shall be removed within 30 days after final site stabilization is achieved. Trapped sediment shall be deposited and stabilized on site. Areas disturbed resulting from removal shall be permanently stabilized.

19. Construction shall not be considered complete and acceptable until all disturbed soil surfaces have been protected from erosion with permanent landscaping, covering with impervious surfaces, restored to original undisturbed condition or permanently stabilized.

20. Vegetated stabilization and landscaping shall be fertilized, watered and maintained to insure that growth of vegetation is established and sustained.

21. During dry weather construction periods the contractor shall provide project-specific dust control measures that may include: Seeding, Mulching, Matting, Water, Tackifier, or Chemical Soil Stabilizers. The contractor shall maintain the dust control measures through dry weather periods until all disturbed areas have been stabilized. Immediately re-stabilize areas disturbed by contractor's operations or other activities (wind, water, vandalism, etc.).

DESIGNED	MME
DRAWN	BAK
CRP	320322
HOR.	N/A
VERT.	N/A
DATE	11/21/03
DWG:	ED1
SHEET	15 OF 78

CALL 48 HOURS BEFORE YOU DIG 1-800-553-4344 "It's the Law" NORTHWEST UTILITIES NOTIFICATION CENTER

DON B. OWINGS STATE OF WASHINGTON 35005 REGISTERED PROFESSIONAL ENGINEER EXPIRES SEPT. 25, 2004

DESIGN & ENGINEERING DIVISION
DESIGN SECTION

NE 117th STREET
EROSION CONTROL DETAILS

proud past, promising future
CLARK COUNTY WASHINGTON

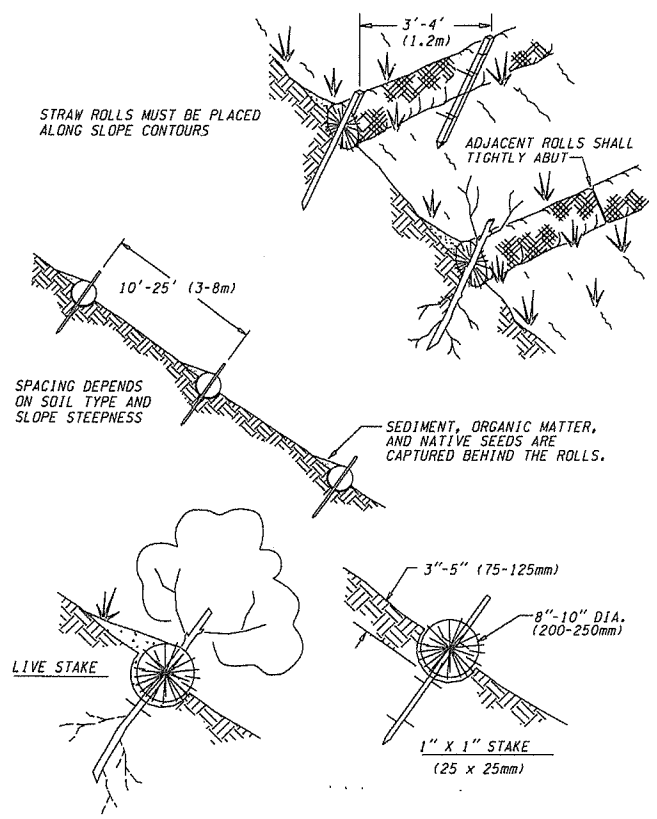

(A) WATTLE DETAIL

NTS

Construction Specifications:

Prepare the slope before the wattling procedure is started.

Shallow gullies should be smoothed as work progresses.

Dig small trenches across the slope on contour, to place rolls in. The trench should be deep enough to accommodate half the thickness of the roll. When the soil is loose and uncompacted, the trench should be deep enough to bury the roll 2/3 of its thickness because the ground will settle.

It is critical that rolls are installed perpendicular to water movement, parallel to the slope contour.

Start building trenches and install rolls from the bottom of the slope and work up.

Construct trenches at contour intervals of 3-12 feet (1-4 m) apart depending on steepness of slope. The steeper the slope, the closer together the trenches.

Lay the roll along the trenches fitting it snugly against the soil. Make sure no gaps exist between the soil and the straw wattle.

Use a straight bar to drive holes through the wattle and into the soil for the willow or wooden stakes.

Drive the stake through prepared hole into soil. Leave only 1 or 2 inches (25 or 51 mm) of stake exposed above roll.

If using willow stakes refer to Live Staking BMP.

Install stakes at least every 4 feet (1.2 m) apart through the wattle. Additional stakes may be driven on the downslope side of the trenches on highly erosive or very steep slopes.

Inspection and Maintenance:

Inspect the straw rolls and the slopes after significant storms. Make sure the rolls are in contact with the soil.

Repair any rills or gullys promptly.

Reseed or replant vegetation if necessary until the slope is stabilized.

DESIGNED	MME
DRAWN	BAK
CRP	320322
HOR.	N/A
VERT.	N/A
DATE	11/27/03
DWG:	ED2
SHEET	16 OF 78

CALL 48 HOURS BEFORE YOU DIG
1-800-553-4344
"It's the Law"
NORTHWEST UTILITIES NOTIFICATION CENTER

DON B. OWINGS
STATE OF WASHINGTON
REGISTERED PROFESSIONAL ENGINEER
EXPIRES SEPT. 25, 2004

DESIGN & ENGINEERING DIVISION
DESIGN SECTION

NE 117TH STREET
EROSION CONTROL DETAILS

proud past, promising future

CLARK COUNTY
WASHINGTON

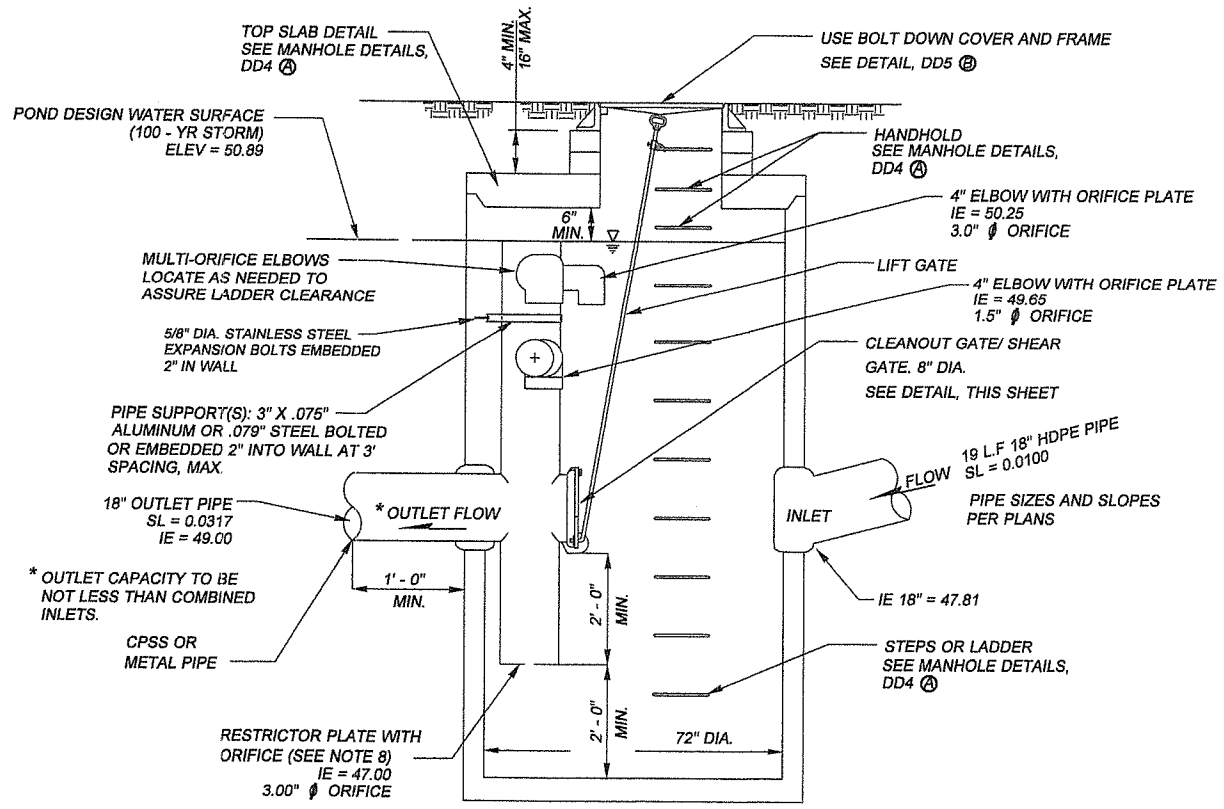

MODIFIED INLET TYPE 2 (OUTLET STRUCTURE)

N.T.S

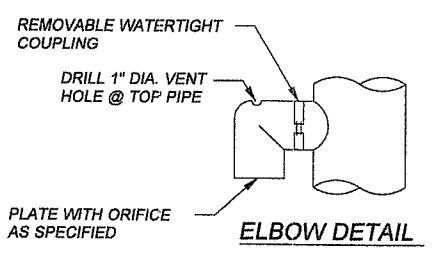

ELBOW DETAIL

SEE NOTES, THIS SHEET

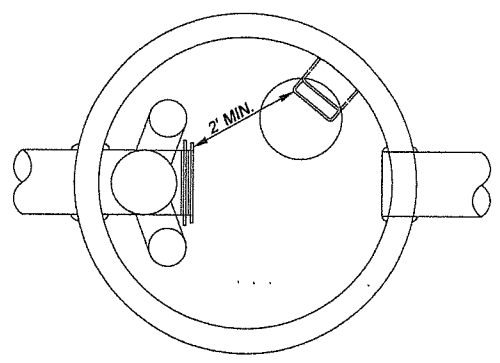

PLAN

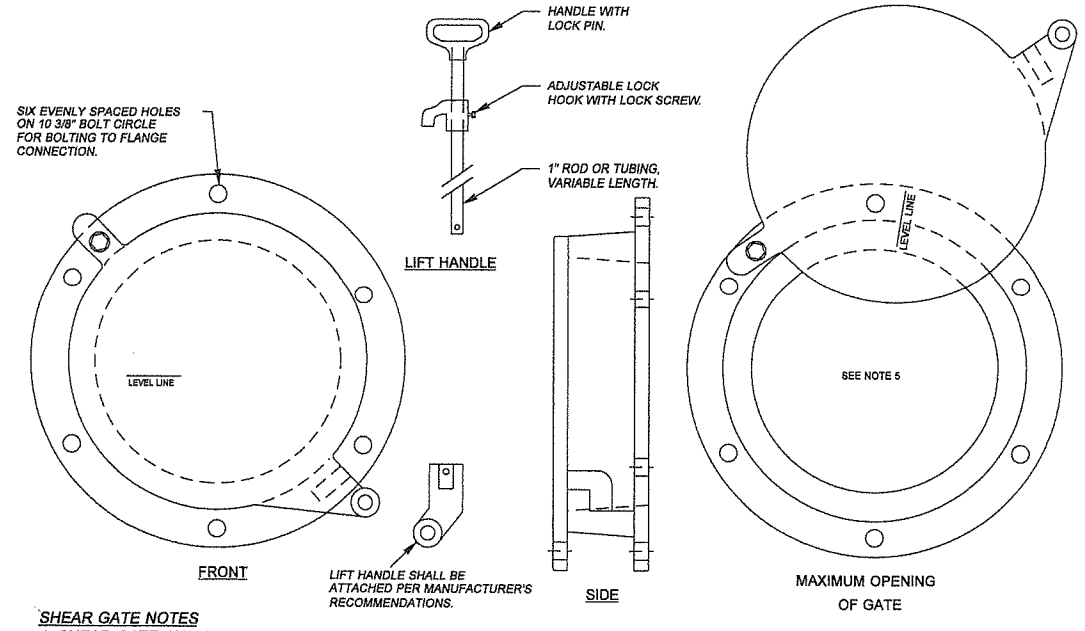

SHEAR GATE NOTES

1. SHEAR GATE SHALL BE ALUMINUM ALLOY PER ASTM B-26-ZG-32a OR CAST IRON ASTM A48 CLASS 30B AS REQUIRED.
2. GATE SHALL BE 8" DIAM. UNLESS OTHERWISE SPECIFIED.
3. GATE SHALL BE JOINED TO TEE SECTION BY BOLTING (THROUGH FLANGE), WELDING, OR OTHER SECURE MEANS.
4. LIFT ROD: AS SPECIFIED BY MFR. WITH HANDLE EXTENDING TO WITHIN ONE FOOT OF COVER AND ADJUSTABLE HOOK LOCK FASTENED TO FRAME OR UPPER HANDHOLD.
5. GATE SHALL NOT OPEN BEYOND THE CLEAR OPENING BY LIMITED HINGE MOVEMENT, STOP TAB, OR SOME OTHER DEVICE.
6. NEOPRENE RUBBER GASKET REQUIRED BETWEEN RISER MOUNTING FLANGE AND GATE FLANGE.
7. MATING SURFACES OF LID AND BODY TO BE MACHINED FOR PROPER FIT.
8. FLANGE MOUNTING BOLTS SHALL BE 3/8" DIAM. STAINLESS STEEL.
9. ALTERNATE CLEANOUT/SHEAR GATES TO THE DESIGN SHOWN ARE ACCEPTABLE, PROVIDED THEY MEET THE MATERIAL SPECIFICATIONS ABOVE AND HAVE A SIX BOLTS, 10-3/8" BOLT CIRCLE FOR BOLTING TO THE FLANGE CONNECTION.

FLOW CONTROL DEVICE NOTES

1. EXCEPT AS SHOWN OR NOTED, UNITS SHALL BE CONSTRUCTED IN ACCORDANCE WITH THE REQUIREMENTS FOR WSDOT CATCH BASIN TYPE 2, 54" MIN. DIA.
2. FOR DETAILS SHOWING GRADE RING, LADDER, STEPS, HANDHOLDS, AND TOP SLABS, SEE DD4 Ⓐ.
3. THE RESTRICTOR/SEPARATOR AND PIPE SUPPORTS SHALL BE OF THE SAME MATERIAL AND SHALL BE FABRICATED FROM 0.060" ALUMINUM OR 0.064" ALUMINIZED STEEL OR 0.064" GALVANIZED STEEL PIPE IN ACCORDANCE WITH AASHTO M 36, M 196, M 197 AND M 274. GALVANIZED STEEL SHALL HAVE TREATMENT 1.
4. OUTLET SHALL BE CONNECTED TO CULVERT OR SEWER PIPE WITH A STANDARD COUPLING BAND FOR CORRUGATED METAL PIPE OR GROUTED INTO THE BELL OF CONCRETE PIPE.
5. THE VERTICAL RISER STEM OF THE RESTRICTOR/SEPARATOR SHALL BE THE SAME DIAMETER AS THE HORIZONTAL OUTLET PIPE WITH AN 8" MIN. SIZE.
6. FRAME AND LATTER, OR STEPS TO BE OFFSET SO THAT:
   A. CLEANOUT GATE IS VISIBLE FROM TOP
   B. CLIMB-DOWN SPACE IS CLEAR OF RISER AND CLEANOUT GATE.
   C. FRAME IS CLEAR OF CURB (IF ANY EXISTS).
7. MULTI-ORIFICE ELBOWS MAY BE LOCATED AS SHOWN OR ALL ON ONE SIDE OF RISER TO ASSURE LADDER CLEARANCE. SIZE OF ELBOWS TO BE DETERMINED BY ENGINEER.
8. RESTRICTOR PLATE WITH ORIFICE AS SPECIFIED IN THE PLANS. OMIT PLATE IF ONLY FOR OIL POLLUTION CONTROL. SPECIFIED OPENING TO BE CUT ROUND AND SMOOTH EDGED.

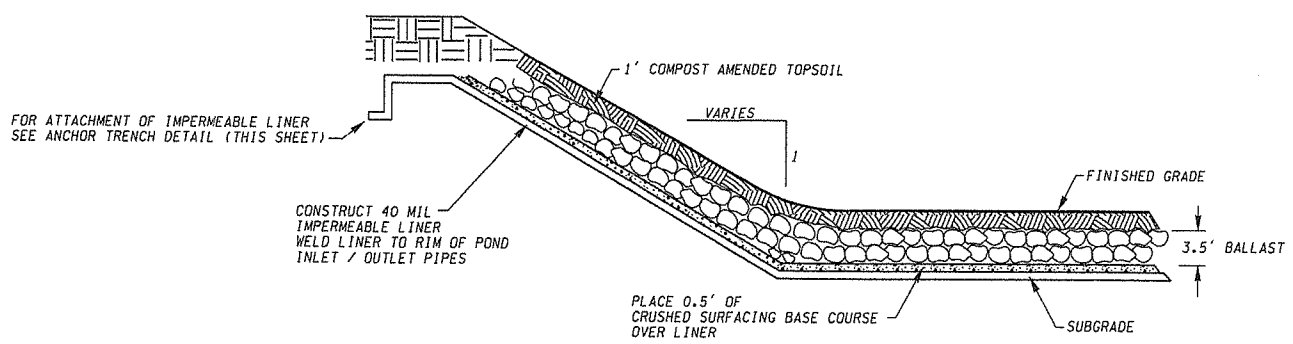

WETLAND BALLAST DETAIL

SEE SPECIAL PROVISIONS
FOR LINER SPECIFICATIONS AND INSTALLATION

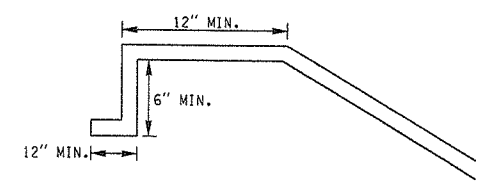

ANCHOR TRENCH DETAIL

DESIGNED	KAM
DRAWN	CRB
CRP	320322
HOR.	N/A
VERT.	N/A
DATE	11/27/03
DWG:	SD1
SHEET	17 OF 78

CALL 48 HOURS BEFORE YOU DIG 1-800-553-4344 "It's the Law" NORTHWEST UTILITIES NOTIFICATION CENTER

DOUGLAS B. OWINGS STATE OF WASHINGTON 18396 REGISTERED PROFESSIONAL ENGINEER EXPIRES SEPT. 25, 2004

DESIGN & ENGINEERING DIVISION
DESIGN SECTION

NE 117th STREET
DRAINAGE DETAILS

proud past, promising future
CLARK COUNTY WASHINGTON

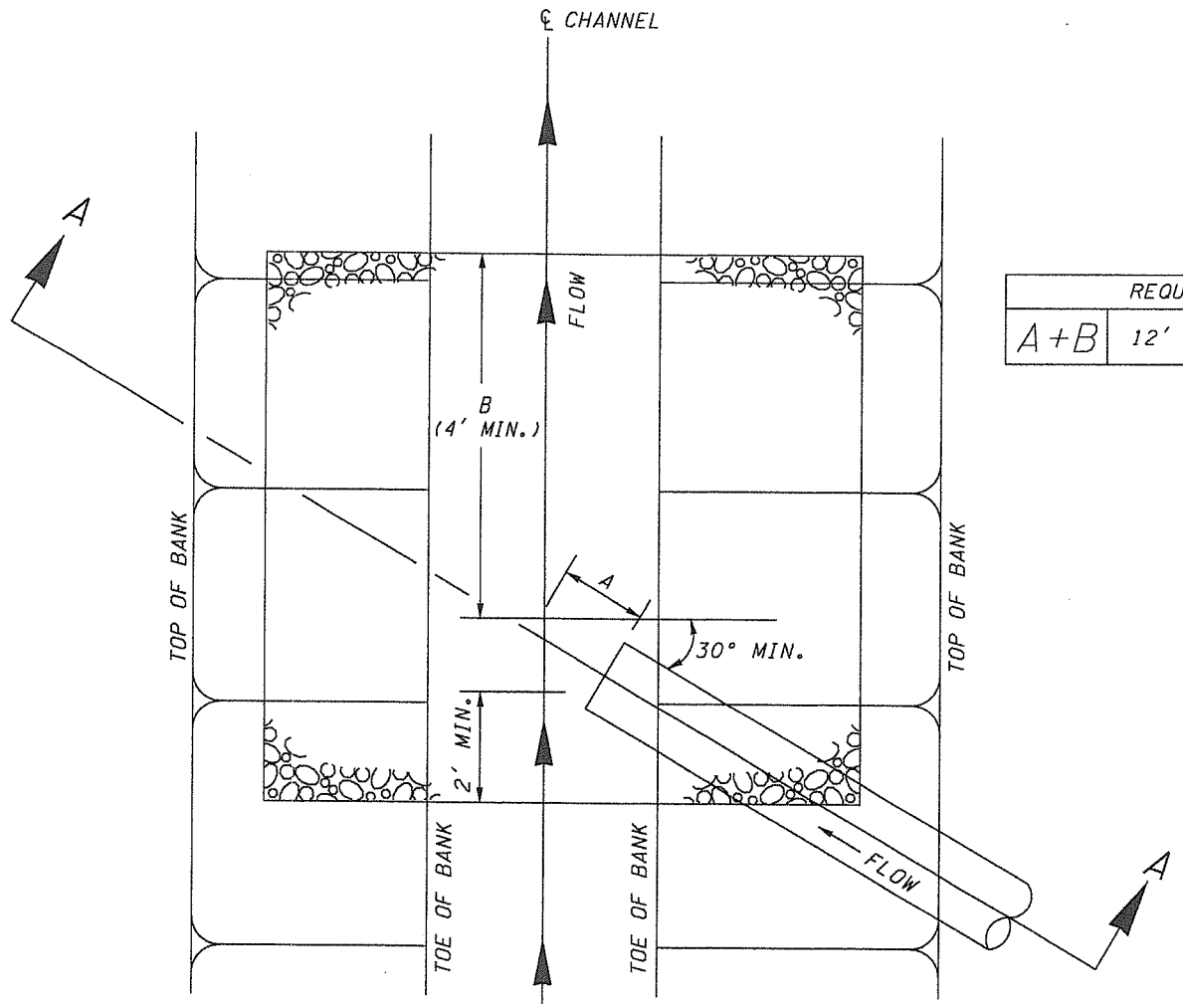

PLAN

REQUIRED DIMENSIONS	
A+B	12' FOR LIGHT LOOSE RIPRAP

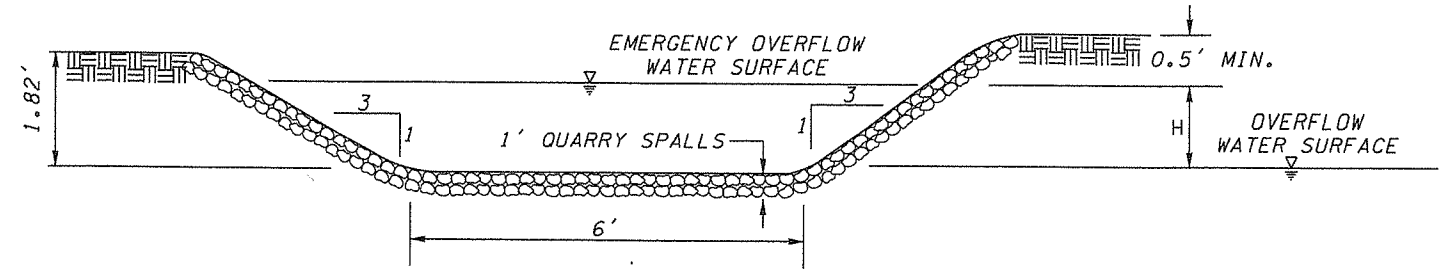

OVERFLOW SPILLWAY DETAIL

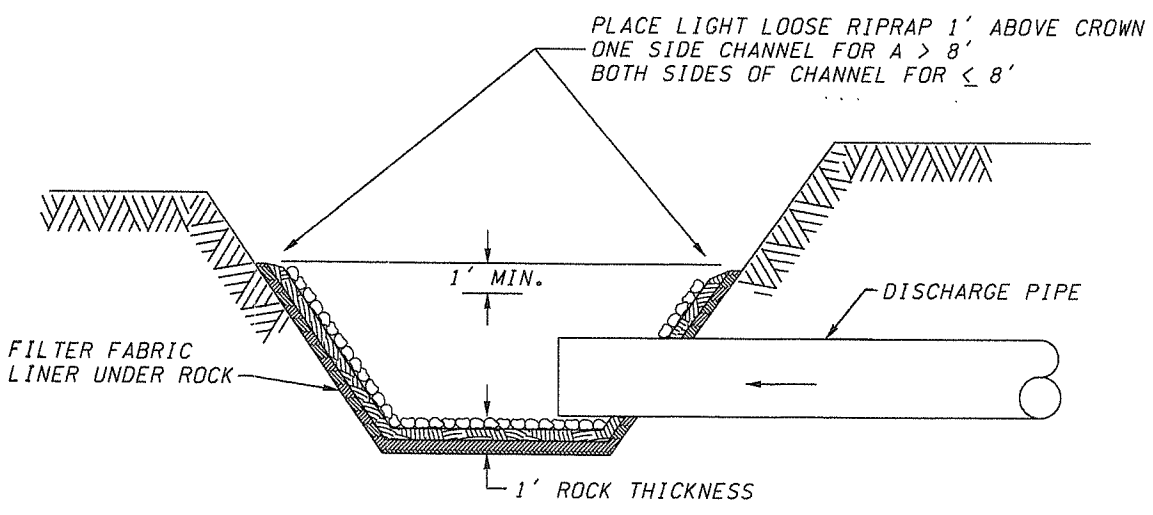

SECTION A-A

RIPRAP PROTECTION DETAIL

SEE SPECIAL PROVISION FOR RIPRAP

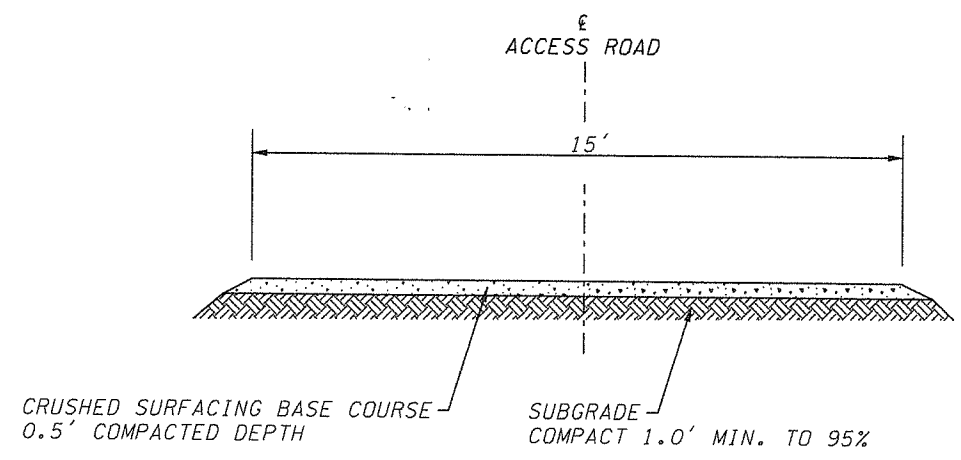

ROADWAY SECTION
FOR STORMWATER FACILITY
ACCESS ROAD

DESIGN & ENGINEERING DIVISION
DESIGN SECTION

NE 117TH STREET
STORMWATER FACILITY DETAILS

CALL 48 HOURS BEFORE YOU DIG
1-800-553-4344
"It's the Law"
NORTHWEST UTILITIES NOTIFICATION CENTER

DESIGNED MME
DRAWN BAK
CRP 320322
HOR. N/A
VERT. N/A
DATE 11/27/03
DWG: SD2
SHEET 18 OF 78

EXPIRES SEPT. 25, 2004

proud past, promising future
CLARK COUNTY WASHINGTON

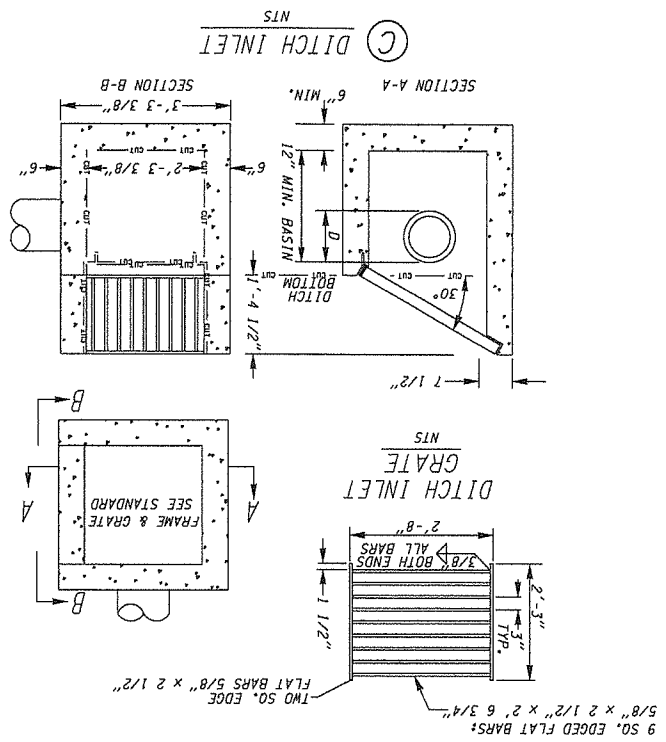

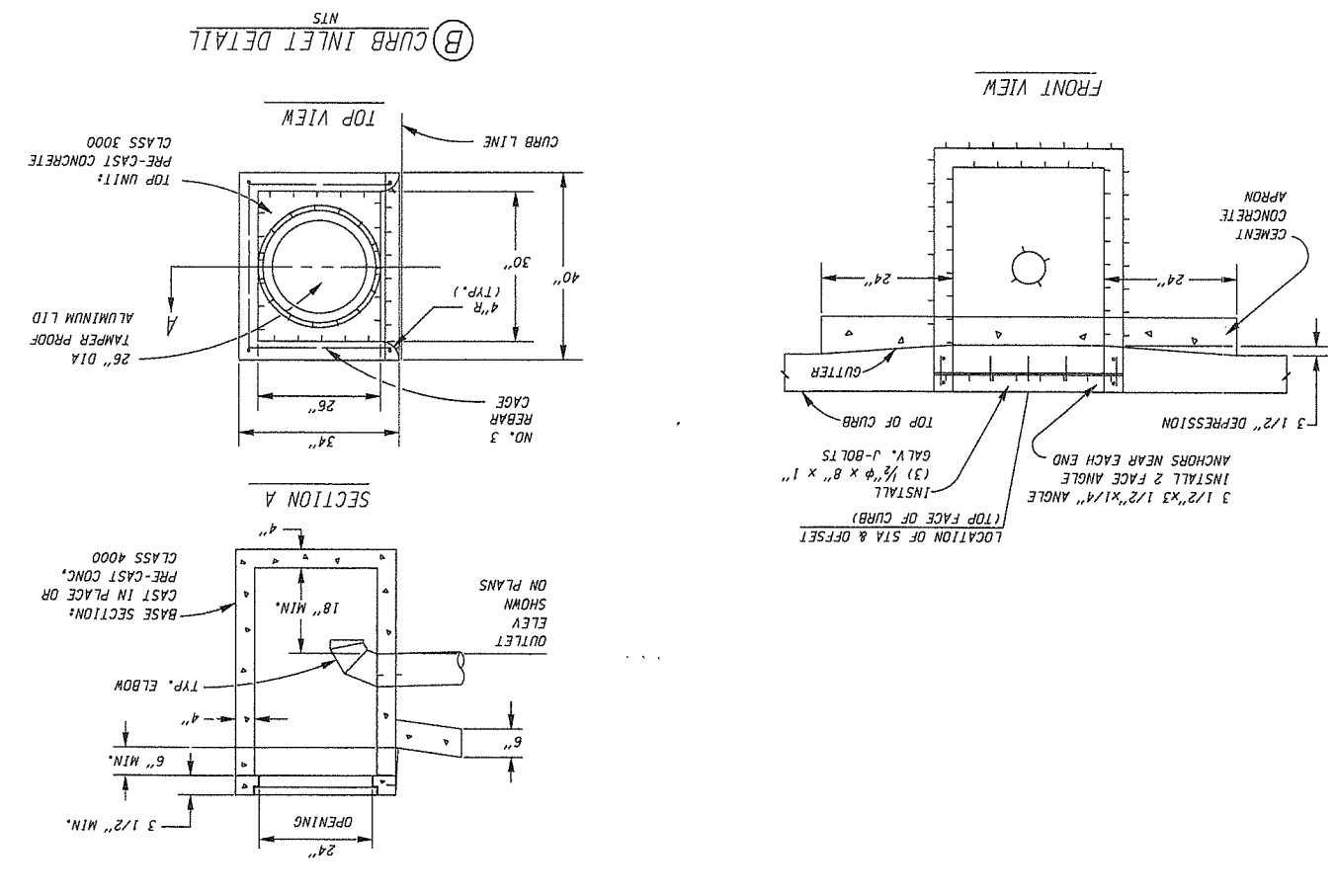

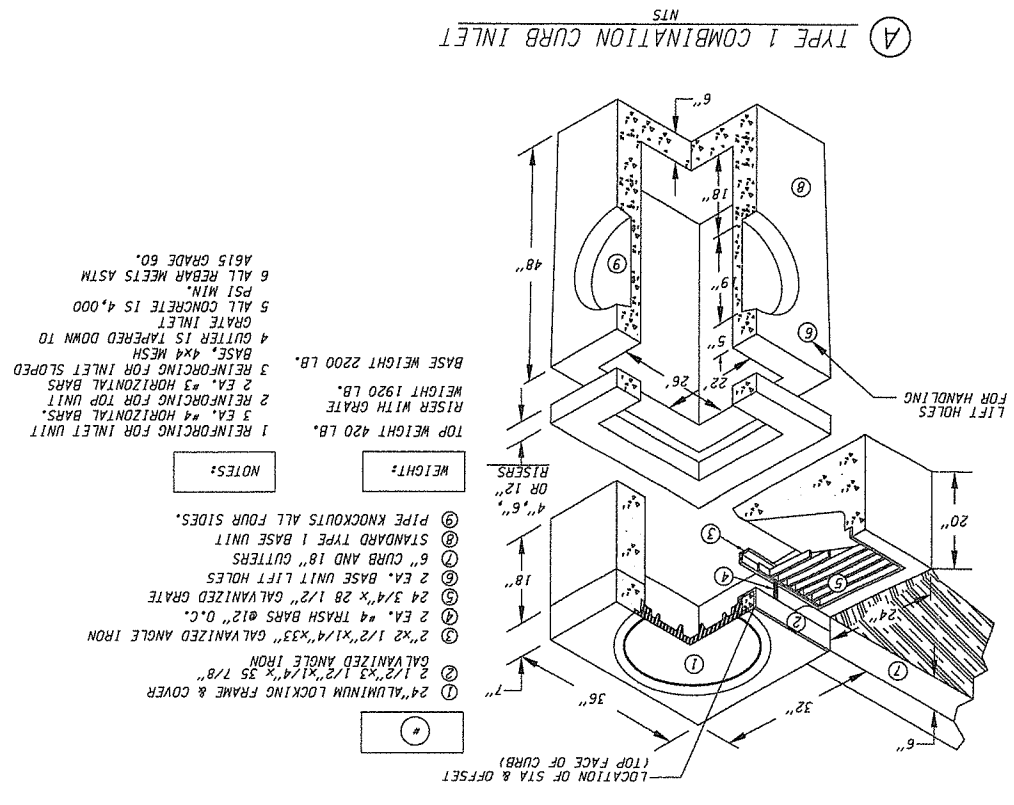

#	
①	24" ALUMINUM LOCKING FRAME & COVER
②	2 1/2"x3 1/2"x1/4"x 35 7/8" GALVANIZED ANGLE IRON
③	2"x2 1/2"x1/4"x33" GALVANIZED ANGLE IRON
④	2 EA. #4 TRASH BARS @12" O.C.
⑤	24 3/4"x 28 1/2" GALVANIZED GRATE
⑥	2 EA. BASE UNIT LIFT HOLES
⑦	6" CURB AND 18" GUTTERS
⑧	STANDARD TYPE 1 BASE UNIT
⑨	PIPE KNOCKOUTS ALL FOUR SIDES.

WEIGHT:	NOTES:
TOP WEIGHT 420 LB.	1 REINFORCING FOR INLET UNIT
RISER WITH GRATE WEIGHT 1920 LB.	3 EA. #4 HORIZONTAL BARS.
BASE WEIGHT 2200 LB.	2 REINFORCING FOR TOP UNIT
	2 EA. #3 HORIZONTAL BARS
	3 REINFORCING FOR INLET SLOPED BASE, 4x4 MESH
	4 GUTTER IS TAPERED DOWN TO GRATE INLET
	5 ALL CONCRETE IS 4,000 PSI MIN.
	6 ALL REBAR MEETS ASTM A615 GRADE 60.

CLARK COUNTY WASHINGTON

proud past, promising future

DESIGN & ENGINEERING DIVISION
DESIGN SECTION

NE 117th STREET
DRAINAGE DETAILS

DON B. OWINGS
STATE OF WASHINGTON
PROFESSIONAL ENGINEER
EXPIRES SEPT. 25, 2004

CALL 48 HOURS BEFORE YOU DIG
1-800-553-4344
"It's the Law"
NORTHWEST UTILITIES NOTIFICATION CENTER

DESIGNED	MME
DRAWN	BAK
CRP	320322
HOR.	N/A
VERT.	N/A
DATE	11/27/03
DWG:	DD1
SHEET	19 OF 78

(A) OPEN CUT UTILITY TRENCH BACKFILL DETAIL (COLLECTOR OR ARTERIAL)

SURFACING:

1. All A.C.P. shall be saw cut to provide a straight, clean edge prior to paving.
2. The cut line shall be one continuous straight line from the outer excavation limits of manhole, valve box, etc. to manhole, valve box, etc.
3. Pave with an 0.5 ft. minimum compacted depth A.C.P., or match existing or design section, whichever is greater.
4. Lifts for A.C.P. (Class A) shall be 0.15 ft. minimum and 0.35 ft. maximum for non-surface lifts (0.25' maximum for surface lift); the temperature shall be 250 degree minimum, 350 degree maximum, compacted to 92% of the theoretical maximum.
5. All joints shall be tacked, sealed and sanded.
6. Trench shall be plated until paved.
7. For longitudinal installation, full lane width including turn lanes restoration shall be required or as directed by Clark County. For transverse installation refer to surfacing restoration of detail U6. See Section 12.20A.120.C.

BASE COURSE:

1. 0.80 ft. minimum depth (1-1/4" minus) C.S.B.C. (W.S.D.O.T. approved material).
2. Compacted to 95% of maximum density. See trench zone.
3. Equivalent depth of A.T.B. may be substituted.
4. For transverse or diagonal trenches in existing roadway pavement, CDF (as defined in the standard specifications section 2-09.3(1)E) will be used for a minimum of 3' in depth or from 6" above the top of the pipe to the bottom of full pavement section which ever is less.

TRENCH ZONE:

1. Granular backfill as approved by local agency or W.S.D.O.T. specifications for granular backfill. Compacted to 95% of maximum density in the trench zone using Method C compaction as per Section 2-03.3(14)C.
2. Native material may be used if approved prior to construction by Clark County.
3. Trench zone width -- see below.

PIPE ZONE:

1. Pipe zone material as specified by utility owner, and shall conform to section 9-03.12(3) WSDOT Specs.
2. 1.0 ft. max. from top of the pipe. 6" from top of pipe when CDF backfill used.

CONDITIONS:

1. A copy of the permit and requirements shall be on the job site at all times.
2. The permit holder shall be responsible for all restoration and maintenance of ditches, shoulders, driveways, landscaping, etc.
3. Call Clark County at 397-2446 twenty-four hours prior to commencing work.

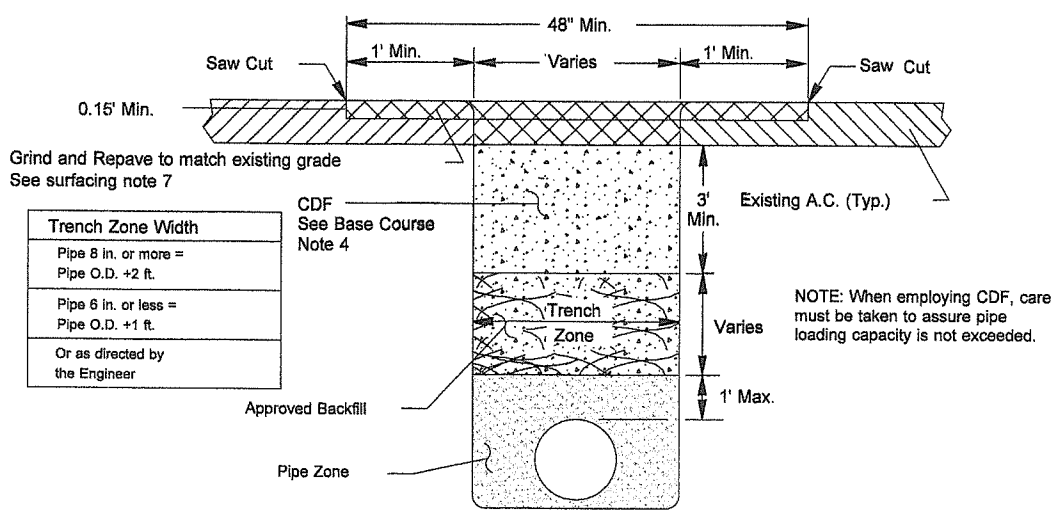

Trench Zone Width
Pipe 8 in. or more = Pipe O.D. +2 ft.
Pipe 6 in. or less = Pipe O.D. +1 ft.
Or as directed by the Engineer

STANDARD TRENCH RESTORATION NOTES:

1. UNLESS OTHERWISE EXEMPTED IN CCC 12.20A.070.F, A WRITTEN UTILITY PERMIT SHALL BE REQUIRED FOR EACH CONSTRUCTION ACTIVITY WITHIN EXISTING COUNTY ROAD RIGHT-OF-WAY TO INSTALL, MOVE OR REPAIR A UTILITY INCLUDING PRIVATE LINES. NO WORK MAY COMMENCE PRIOR TO PERMIT APPROVAL BY THE COUNTY. OFF-SITE UTILITY CONSTRUCTION WORK THAT IS BEING DONE UNDER A GENERAL DEVELOPMENT PERMIT WILL REQUIRE A SEPARATE UTILITY PERMIT. SEE CCC 13.12A AND 12.20A FOR UTILITY PERMIT REQUIREMENTS.

2. BEFORE ANY CONSTRUCTION WORK WITHIN THE RIGHT-OF-WAY MAY COMMENCE, A SURETY BOND (OR OTHER INSTRUMENT ACCEPTABLE TO THE COUNTY) IN AN AMOUNT REQUIRED BY THE COUNTY, BUT NOT LESS THAN $1,000, WRITTEN BY A SURETY COMPANY AUTHORIZED TO DO BUSINESS IN WASHINGTON, MAY BE REQUIRED BY THE COUNTY TO INSURE COMPLETION OF CONSTRUCTION, INCLUDING RESTORATION OF SURFACING, SLOPES, SLOPE TREATMENT, TOPSOIL, LANDSCAPE TREATMENT, DRAINAGE FACILITIES AND CLEANUP OF RIGHT-OF-WAY FOR A PERIOD ENDING NOT MORE THAN 2 YEARS AFTER DATE OF COMPLETION. SEE CCC 12.20A.070.C(2)

3. ALL MATERIALS AND WORKMANSHIP SHALL BE IN CONFORMANCE WITH THE STANDARD SPECIFICATIONS FOR ROAD, BRIDGE, AND MUNICIPAL CONSTRUCTION PREPARED BY THE WASHINGTON STATE CHAPTER OF THE AMERICAN PUBLIC WORKS ASSOCIATION (APWA) AND THE WASHINGTON STATE DEPARTMENT OF TRANSPORTATION (WSDOT) AND SHALL COMPLY WITH THE CURRENT EDITION, EXCEPT WHERE OTHERWISE NOTED IN CCC 12.20A, AND THESE STANDARD PLANS.

4. THE RIGHT-OF-WAY RESTORATION SHALL CONFORM TO COUNTY STANDARDS AND POLICIES AND APPLICABLE STATE AND FEDERAL LAWS, OR THE WORK SHALL BE REJECTED. THE COST ASSOCIATED WITH ALL WORK AND MATERIALS NECESSARY TO OBTAIN COMPLIANCE SHALL BE THE RESPONSIBILITY OF THE PERMIT APPLICANT.

5. UNDERGROUND UTILITY INSTALLATION SHALL CONFORM TO CCC 12.20A.080.F, AND SHALL PROVIDE FOR RESTORATION OF THE PAVEMENT, PAVED SHOULDERS, CURBS AND GUTTERS, AND SIDEWALKS IN ACCORDANCE WITH CCC 12.20A.120, UNLESS OTHERWISE MODIFIED BY THE UTILITY PERMIT.

6. TRENCH BACKFILL AND RESURFACING SHALL BE AS SHOWN IN THE STANDARD DETAILS, UNLESS MODIFIED BY THE UTILITY PERMIT. SURFACING DEPTHS AND PAVING LIMITS SHOWN IN THE STANDARD PLANS ARE MINIMUMS AND MAY BE INCREASED BY THE COUNTY ENGINEER TO MEET TRAFFIC LOADINGS OR SITE CONDITIONS.

7. THE FINAL PAVEMENT PATCH SHALL BE COMPLETED AT THE FIRST POSSIBLE OPPORTUNITY, AND NOT TO EXCEED THIRTY (30) DAYS AFTER FIRST OPENING THE TRENCH. THIS TIME FRAME MAY BE ADJUSTED IF DELAYS ARE DUE TO INCLEMENT WEATHER, OR OTHER ADVERSE CONDITIONS. HOWEVER, DELAYING OF FINAL PATCH OR OVERLAY WORK IS ALLOWABLE ONLY WHEN APPROVED BY THE COUNTY ENGINEER. THE COUNTY ENGINEER MAY DEEM IT NECESSARY TO COMPLETE THE WORK WITHIN THIRTY (30) DAYS TIME FRAME AND NOT ALLOW ANY TIME EXTENSION. IF THIS OCCURS, THE CONTRACTOR SHALL PERFORM THE NECESSARY WORK AS DIRECTED BY THE ENGINEER.

8. WHEN TRENCHING WITHIN THE ROADWAY SHOULDERS, THE SHOULDER SHALL BE RESTORED AS SHOWN IN STANDARD PLAN #U5.

9. IT IS THE COUNTY'S BASIC POLICY THAT NO PAVEMENTS SHALL BE CUT FOR A PERIOD OF FIVE (5) YEARS AFTER THE PAVEMENT HAS BEEN CONSTRUCTED, OVERLAID OR SEAL-COATED AND THAT CUTTING OF ANY PAVED ROAD IS DISCOURAGED. UNTRENCHED CONSTRUCTION METHODS MUST BE EXPLORED ON ALL PAVED ROAD CROSSINGS REGARDLESS OF CONDITION OF THE ROAD PAVEMENT. A CURRENT LIST OF ROAD SEGMENTS AFFECTED BY THIS PROHIBITION CAN BE SUPPLIED UPON REQUEST.

10. WHEN ROADWAY SURFACES ARE WINDOWED AND POTHOLED, AND WHERE URBAN ARTERIALS OR RURAL COLLECTORS MUST BE TRANSVERSELY TRENCHED, CONTROL DENSITY FILL (CDF) SHALL BE USED FOR THE TOP 3 FEET OF THE BACKFILL (SEE CCC 12.20A.080.K,L). WHEN EMPLOYING CDF, CARE MUST BE TAKEN TO ASSURE PIPE LOADING CAPACITY IS NOT EXCEEDED.

11. AS A CONDITION OF CCC 12.20A, IT IS THE RESPONSIBILITY OF THE PERMIT APPLICANT TO PROVIDE 24 HOUR NOTIFICATION PRIOR TO COMMENCING PROPOSED CONSTRUCTION ACTIVITIES WITHIN THE LIMITS OF THE COUNTY RIGHT-OF-WAY. FAILURE TO COMPLY SHALL RESULT IN THE DISCONTINUING OF THE PERMITTED CONSTRUCTION ACTIVITY FOR A PERIOD OF AT LEAST 24 HOURS.

12. FINAL RESTORATION SHALL BE COMPLETED IN A MANNER THAT PROVIDES THE AREA OF CONSTRUCTION TO BE RESTORED IN AN EQUALLY AS GOOD OR BETTER CONDITION THAN THE EXISTING CONDITION OF THE COUNTY RIGHT-OF-WAY.

DESIGNED	MME
DRAWN	BAK
CRP	320322
HOR.	N/A
VERT.	N/A
DATE	11/27/03
DWG:	DD2
SHEET	20 OF 78

CALL 48 HOURS BEFORE YOU DIG
1-800-553-4344
"It's the Law"
NORTHWEST UTILITIES NOTIFICATION CENTER

GORDON B. OWINGS
STATE OF WASHINGTON
EXPIRES SEPT. 26, 2006

DESIGN & ENGINEERING DIVISION
DESIGN SECTION

NE 117TH STREET
TRENCH DETAILS

proud past, promising future
CLARK COUNTY
WASHINGTON

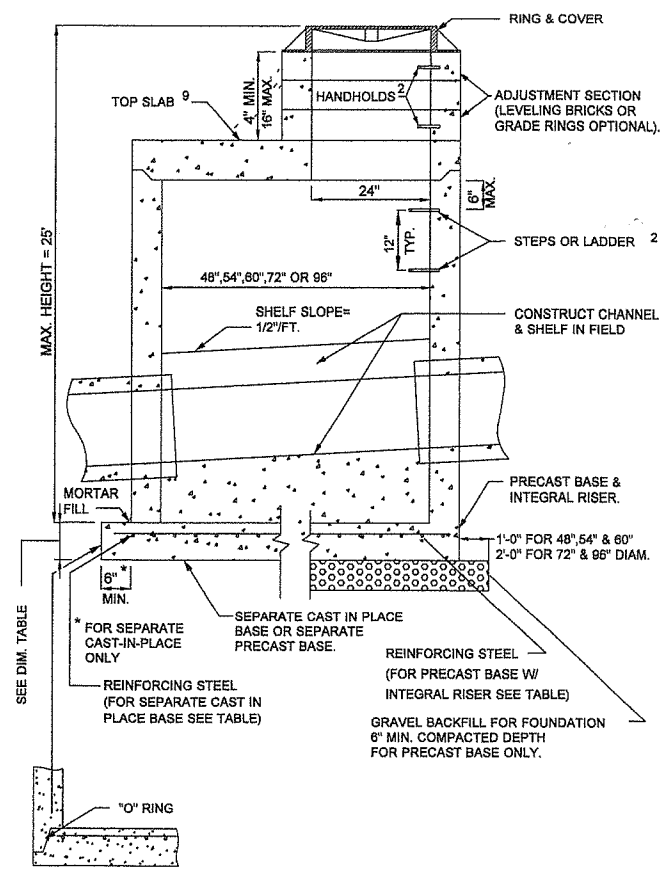

PRECAST BASE JOINT

MANHOLE DIMENSION TABLE						
DIA.	THICKNESS		MAXIMUM KNOCKOUT SIZE	MINIMUM DISTANCE BETWEEN KNOCKOUTS	BASE REINFORCING STEEL SQ IN/FT EACH DIRECTION	
	WALL	BASE			INTEGRAL BASE	SEPARATE BASE
48"	4"	6"	36"	8"	0.15	0.23
54"	4.5"	8"	42"	8"	0.19	0.19
60"	5"	8"	48"	8"	0.25	0.25
72"	6"	8"	60"	12"	0.24	0.35
96"	8"	12"	84"	12"	0.29	0.39

NOTES:

1. MANHOLES SHALL BE CONSTRUCTED IN ACCORDANCE WITH AASHTO M199 UNLESS OTHERWISE SHOWN ON PLANS OR NOTED IN THE WSDOT/APWA STANDARD SPECIFICATIONS.
2. HANDHOLDS IN ADJUSTMENT SECTION SHALL HAVE 3" MIN. CLEARANCE. STEPS IN MANHOLE SHALL HAVE 6" MIN. CLEARANCE. SEE PLAN D1.5, "MANHOLE DETAILS."
   HANDHOLDS SHALL BE PLACED IN ALTERNATING GRADE RINGS OR LEVELING BRICK COURSE WITH A MIN. OF ONE HANDHOLD BETWEEN THE LAST STEP AND THE TOP OF THE MANHOLE.
3. ALL REINFORCED CAST-IN-PLACE CONCRETE SHALL BE CLASS4000. NON-REINFORCED CONCRETE IN CHANNEL AND SHELF SHALL BE CLASS 3000. ALL PRECAST CONCRETE SHALL BE CLASS 4000.
4. PRECAST BASES SHALL BE FURNISHED WITH CUTOUTS OR KNOCKOUTS. KNOCKOUTS SHALL HAVE WALL THICKNESS OF 2" MIN. UNUSED KNOCKOUTS NEED NOT BE GROUTED IF WALL IS LEFT INTACT. PIPES SHALL BE INSTALLED ONLY IN FACTORY KNOCKOUTS UNLESS OTHERWISE APPROVED BY THE ENGINEER.
5. KNOCKOUT OR CUTOUT HOLE SIZE SHALL EQUAL PIPE OUTER DIAM. PLUS MANHOLE WALL THICKNESS. SEE MANHOLE DIMENSION TABLE BELOW.
6. MANHOLE RINGS AND COVERS SHALL BE IN ACCORDANCE WITH SEC. 7.05 AND MEET THE STRENGTH REQUIREMENTS OF FEDERAL SPECIFICATION RR-F-621D. MATING SURFACES SHALL BE FINISHED TO ASSURE NON-ROCKING FIT WITH ANY COVER POSITION.
7. ALL BASE REINFORCING STEEL SHALL HAVE A MIN. YIELD STRENGTH OF 60,000 PSI AND BE PLACED IN THE UPPER HALF OF THE BASE WITH 1" MIN. CLEARANCE.
8. FOR HEIGHTS OF 12' OR LESS, MIN. SOIL BEARING VALUE SHALL EQUAL 3,300 POUNDS PER SQUARE FOOT. FOR HEIGHTS OVER 12', MIN. SOIL BEARING VALUE SHALL EQUAL 3,800 POUNDS PER SQUARE FOOT.
9. FOR DETAILS SHOWING GRADE RING, LADDER, STEPS, HANDHOLDS, AND TOP SLABS, SEE PLAN D1.5, "MANHOLE DETAILS."
10. INSIDE DROP MAXIMUM TO BE 4' VERTICAL DISTANCE I.E. TO I.E.
11. KNOCKOUTS TO BE USED WHEN STUB OUT PIPE IS 3' OR LESS.
12. SEE THE WSDOT/APWA STANDARD SPECIFICATIONS SEC. 7-05.3 FOR JOINT REQUIREMENTS.
13. SEE DETAIL DD4-A, DD5-A,DD5-B.

(A) TYPE 3 MANHOLE

DESIGNED	NME
DRAWN	BAK
CRP	320322
HOR.	N/A
VERT.	N/A
DATE	11/27/03
DWG.	DD3
SHEET	21 OF 78

CALL 48 HOURS BEFORE YOU DIG
1-800-553-4344
"It's the Law"
NORTHWEST UTILITIES NOTIFICATION CENTER

DON B. DWINGER STATE OF WASHINGTON PROFESSIONAL ENGINEER
EXPIRES SEPT. 25, 2004

DESIGN & ENGINEERING DIVISION
DESIGN SECTION

NE 117TH STREET
MANHOLE DETAIL

proud past, promising future
CLARK COUNTY WASHINGTON

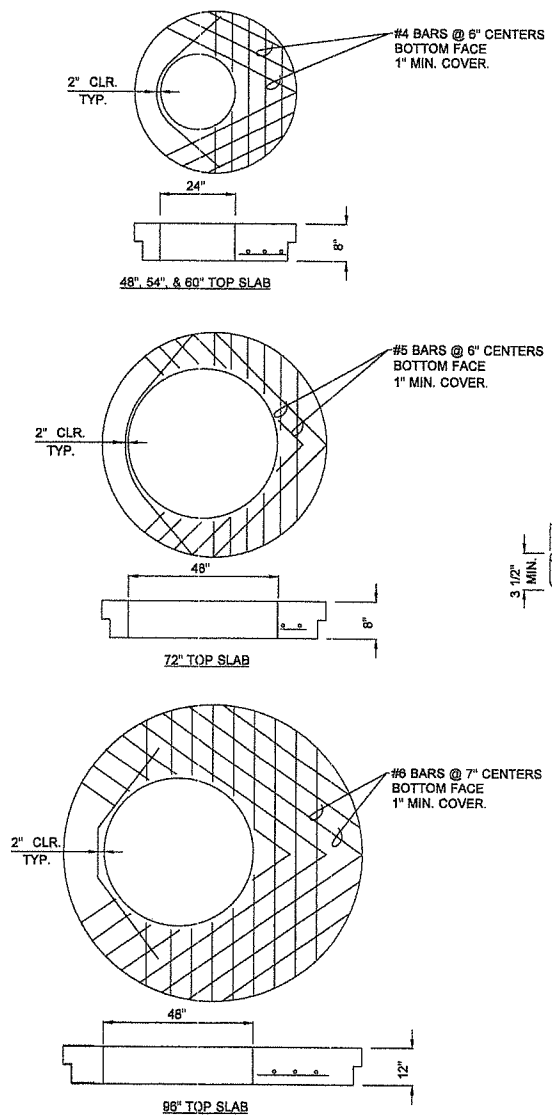

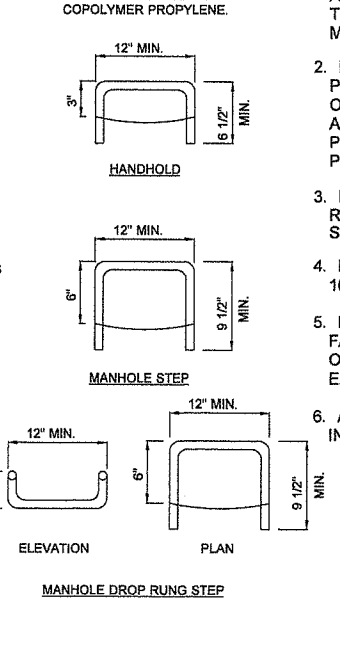

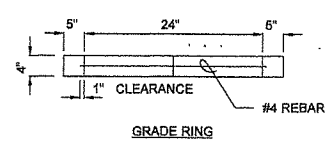

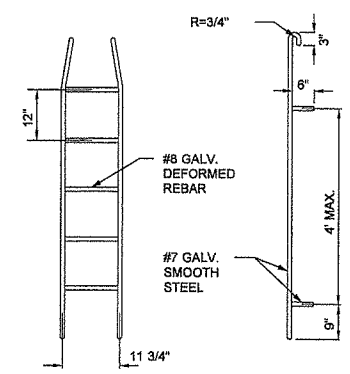

NOTES:

1. PROPRIETARY MANHOLE HANDHOLDS AND STEPS ARE ACCEPTABLE, PROVIDED THAT THEY CONFORM TO SEC. R, ASTM C478, AASHTO M199 AND MEET ALL WISHA REQUIREMENTS.
2. MANHOLE STEP/HANDHOLD LEGS SHALL BE PARALLEL OR APPROXIMATELY RADIAL AT THE OPTION OF THE MANUFACTURER, EXCEPT THAT ALL STEPS IN ANY MANHOLE SHALL BE SIMILAR. PENETRATION OF OUTER WALL BY A LEG IS PROHIBITED.
3. HANDHOLDS AND STOPS SHALL HAVE "DROP" RUNGS OR PROTUBERANCES TO PREVENT SIDEWAYS SLIP.
4. LADDERS OR STEPS SHALL EXTEND TO WITHIN 16" OF BOTTOM OF MANHOLE.
5. HANGING LADDERS SHALL BE PERMANENTLY FASTENED AT TOP BY HANGING ON STEP OR BY BOLTING OR EMBEDDING IN CONCRETE. EACH SHALL BE EMBEDDED AT BOTTOM IN BASE.
6. ADDITIONAL SAFETY FEATURES MAY BE REQUIRED IN VERY DEEP OR UNUSUAL STRUCTURES.

(A) MANHOLE DETAILS

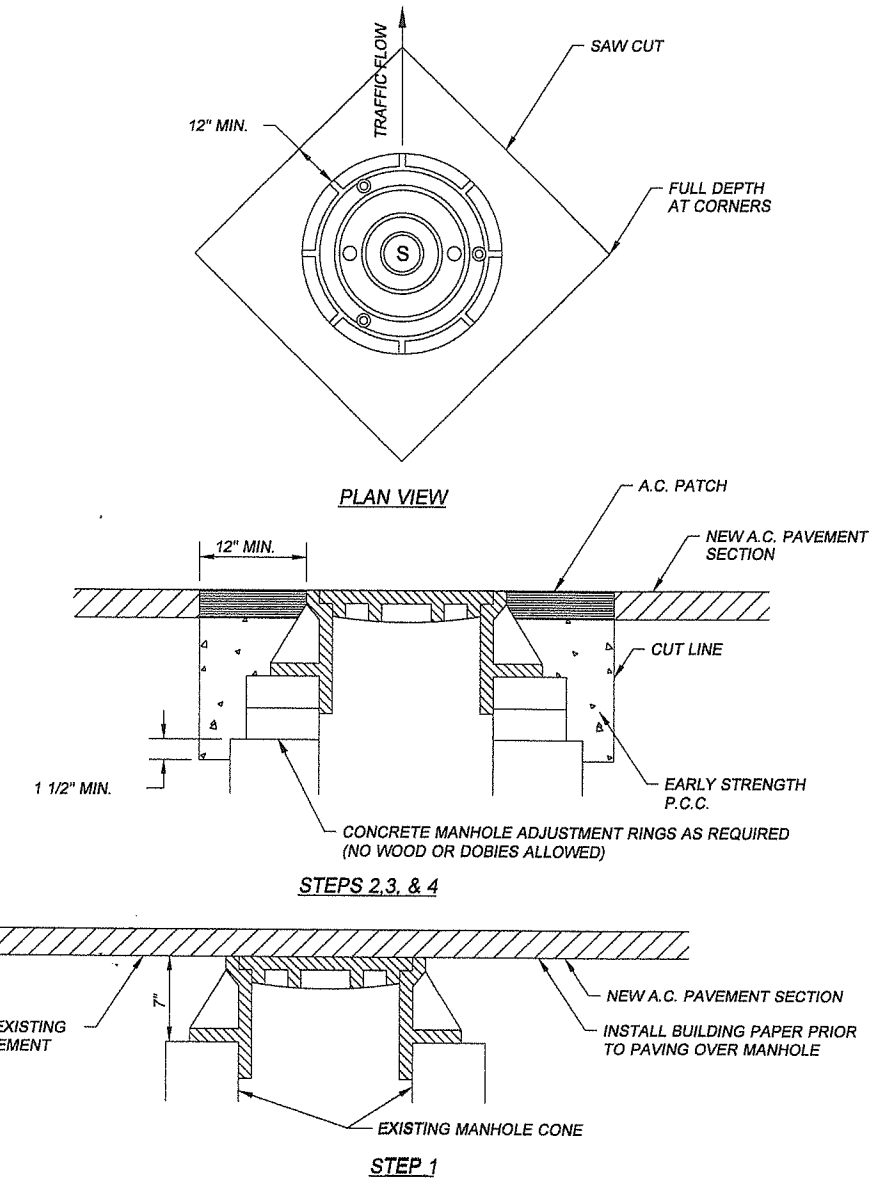

STEP 1 COVER EXSITING MANHOLE WITH BUILDING PAPER AND CONSTRUCT A.C. PAVEMENT OVER TOP OF MANHOLE.

STEP 2 SAW CUT AND REMOVE PAVEMENT AROUND MANHOLE 12" MIN. FROM MANHOLE FRAME.

STEP 3 RAISE MANHOLE FRAME AND COVER USING CONCRETE RINGS AND MECHANICAL ADJUSTMENT DEVICES TO FINISH GRADE MATCHING PROFILE AND CROSS SLOPE.

STEP 4 BACKFILL WITH EARLY STRENGTH P.C.C. AND A.C. TO DEPTHS AS DIRECTED.

(B) EXISTING MANHOLE ADJUSTMENT

DESIGNED	MME
DRAWN	BAK
CRP	320322
HOR.	N/A
VERT.	N/A
DATE	11/27/03
DWG:	DD4
SHEET	22 OF 78

CALL 48 HOURS BEFORE YOU DIG
1-800-553-4344
"It's the Law"
NORTHWEST UTILITIES NOTIFICATION CENTER

BRIAN B. OWINGS STATE OF WASHINGTON 20256 REGISTERED PROFESSIONAL ENGINEER
EXPIRES SEPT. 25, 2004

DESIGN & ENGINEERING DIVISION
DESIGN SECTION

NE 117TH STREET
MANHOLE DETAILS

proud past, promising future
CLARK COUNTY WASHINGTON

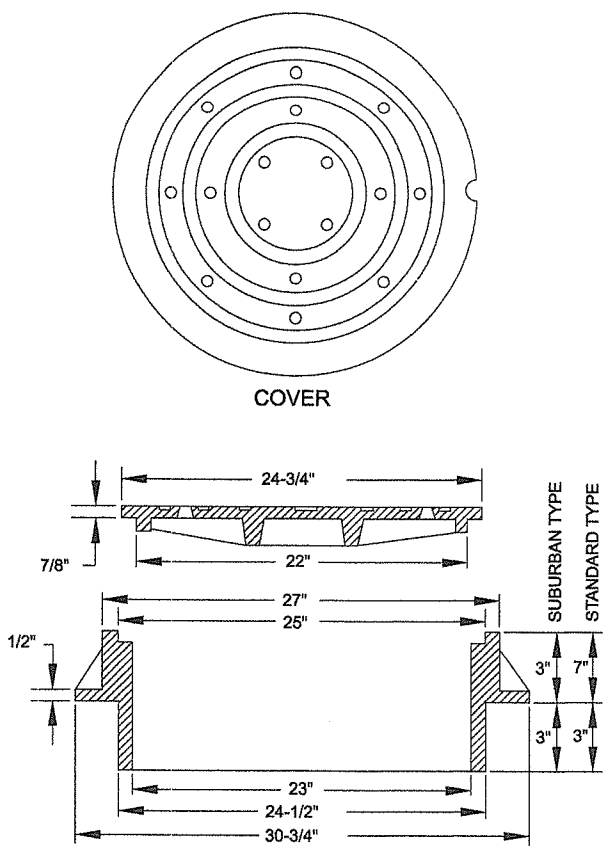

NOTES:

1. USE SUBURBAN TYPE ONLY IN NON-TRAFFIC AREAS, AND ONLY WITH APPROVAL BY COUNTY.
2. COVER MATERIAL TO BE DUCTILE IRON ASTM A536 GRADE 80-55-06
3. FRAME MATERIAL TO BE GRAY CAST IRON ASTM A-48 CLASS 30.
4. SEE WSDOT STANDARD SPECIFICATIONS SEC. 7.05
5. COVER AND FRAME TO BE MACHINED TO A TRUE BEARING ALL AROUND.
6. NOTCH LID FOR LIFTING HOOK.

(A) STANDARD MANHOLE COVER

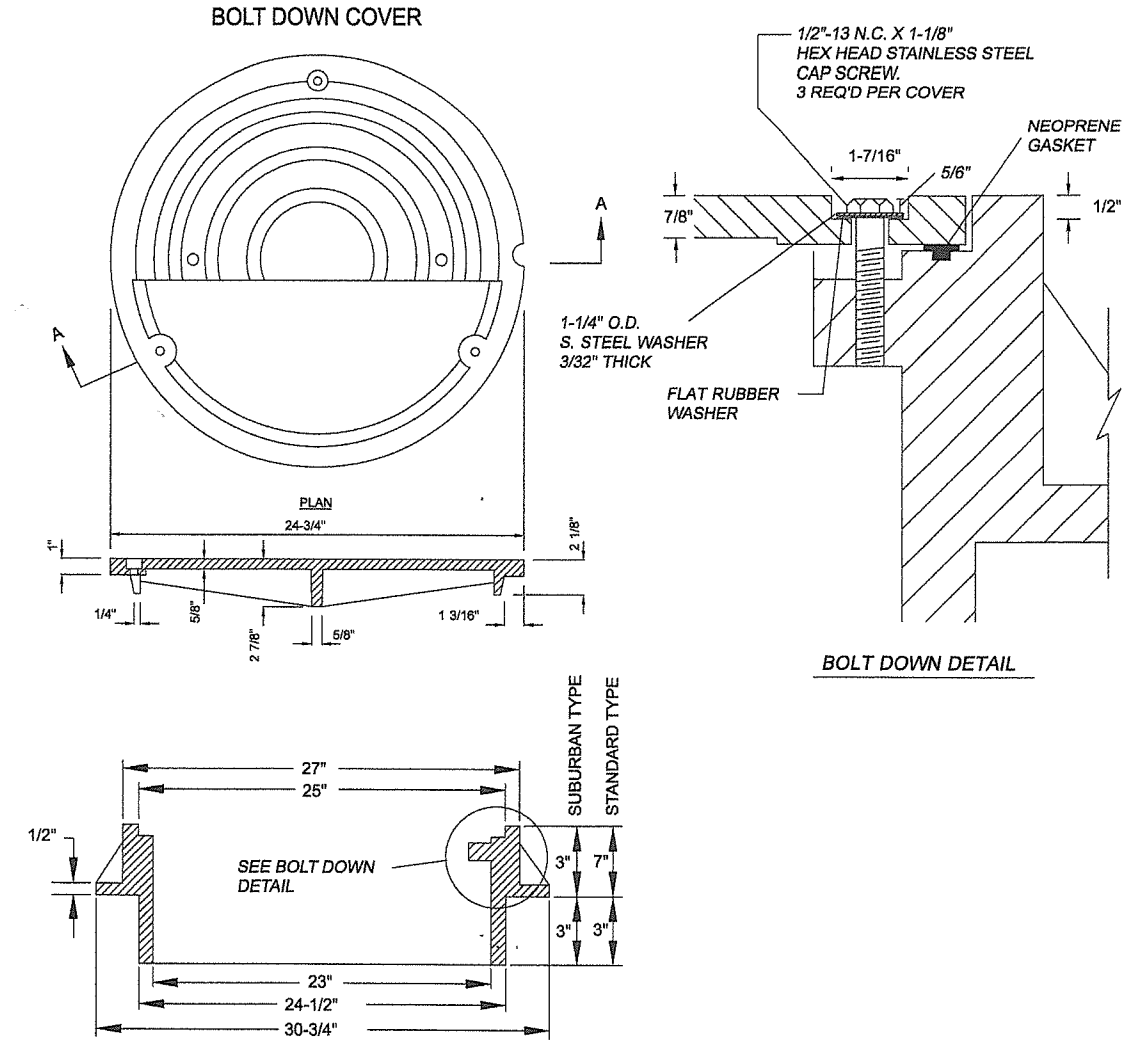

NOTES:

1. USE SUBURBAN TYPE ONLY IN NON-TRAFFIC AREAS, AND ONLY WITH APPROVAL BY COUNTY.
2. COVER MATERIAL TO BE DUCTILE IRON ASTM A536 GRADE 80-55-06
3. FRAME MATERIAL TO BE GRAY CAST IRON ASTM A-48 CLASS 30.
4. SEE WSDOT STANDARD SPECIFICATIONS SEC. 7.05
5. COVER AND FRAME TO BE MACHINED TO A TRUE BEARING ALL AROUND.
6. NOTCH LID FOR LIFTING HOOK.
7. FOR TAMPER PROOF COVER REMOVE GASKET.

(B) BOLT DOWN MANHOLE COVER

DESIGNED	MME
DRAWN	BAK
CRP	320322
HOR.	N/A
VERT.	N/A
DATE	11/27/03
DWG:	DD5
SHEET	23 OF 78

CALL 48 HOURS BEFORE YOU DIG
1-800-553-4344
"It's the Law"
NORTHWEST UTILITIES NOTIFICATION CENTER

DON B. OWINGS
STATE OF WASHINGTON
PROFESSIONAL ENGINEER
EXPIRES SEPT. 25, 2004

DESIGN & ENGINEERING DIVISION
DESIGN SECTION

NE 117TH STREET
DRAINAGE DETAILS

proud past, promising future
CLARK COUNTY
WASHINGTON

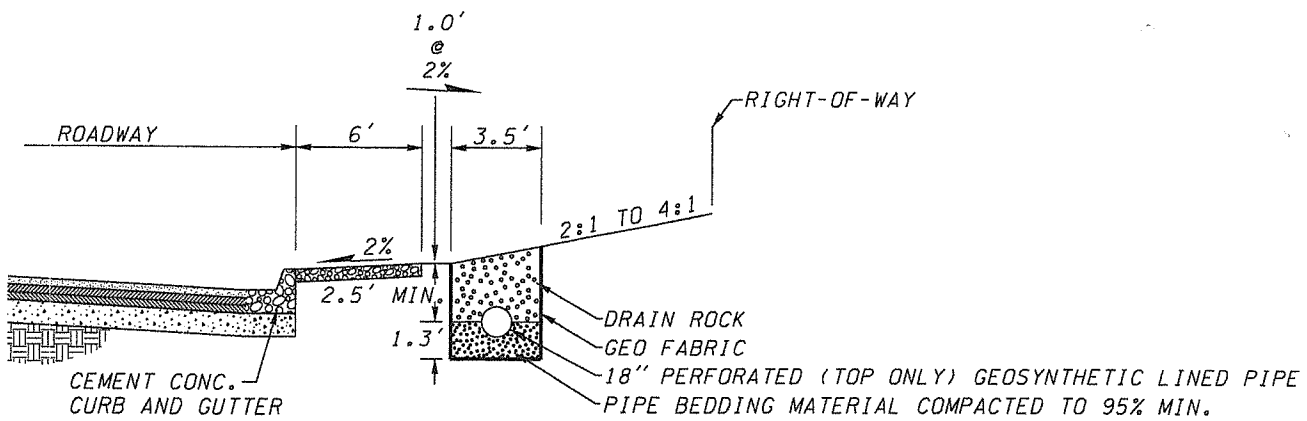

(A) PERFORATED DRAIN PIPE DETAIL

NE 117TH STA 14+25 TO 16+00 (35' RT)
NE 117TH STA 33+85 (33' RT) TO 34+55 (49' RT)

NOTE: SEE SPECIAL PROVISION FOR "UNDERDRAIN PIPE 18 IN. DIAM (PERFORATED)"

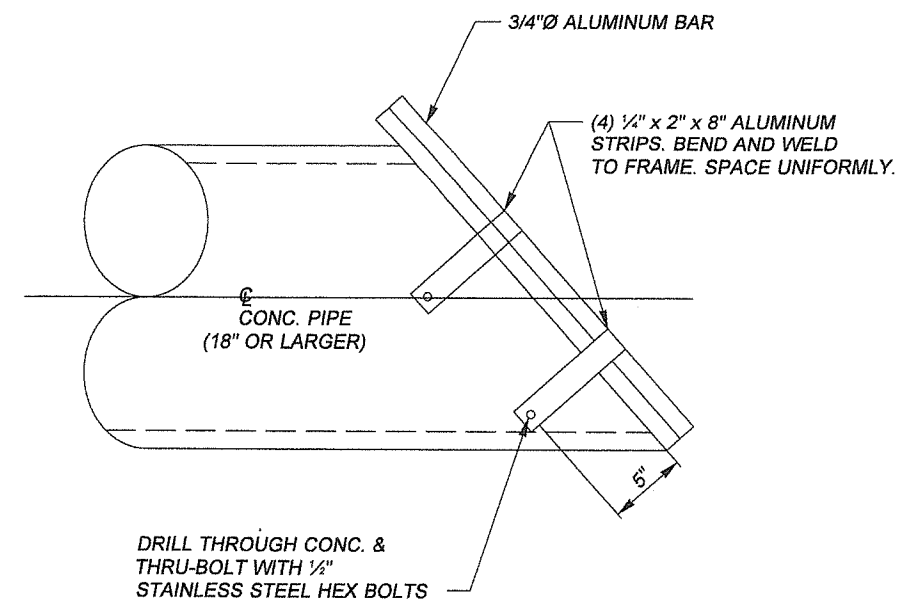

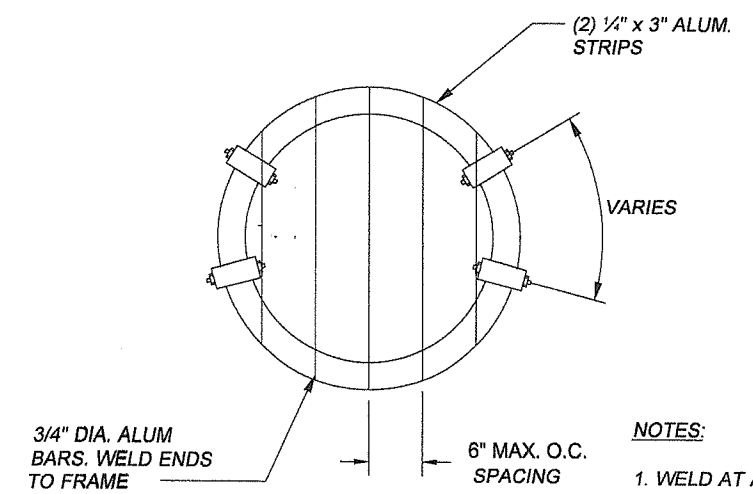

NOTES:

1. WELD AT ALL JOINTS.
2. SHOP DRAWING REQUIRED.
3. USE WITH PLASTIC PIPE REQUIRES MODIFICATION TO BE REVIEWED AND APPROVED BY COUNTY ENGINEER.

(B) TRASH SCREEN DETAIL

DESIGNED	MME
DRAWN	BAK
CRP	320322
HOR.	N/A
VERT.	N/A
DATE	11/27/03
DWG:	DD6
SHEET	24 OF 78

CALL 48 HOURS BEFORE YOU DIG 1-800-553-4344 "It's the Law" NORTHWEST UTILITIES NOTIFICATION CENTER

DAN B. OWINGS STATE OF WASHINGTON 15651 EXPIRES 3-26-04

DESIGN & ENGINEERING DIVISION
DESIGN SECTION

NE 117TH STREET
DRAINAGE DETAILS

proud past, promising future
CLARK COUNTY WASHINGTON

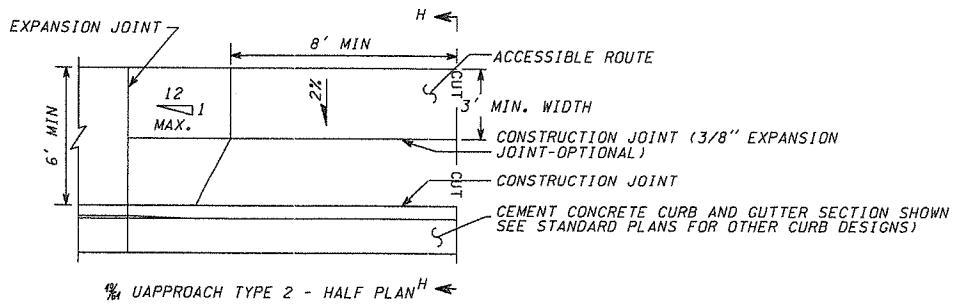

APPROACH TYPE 2 - HALF PLAN

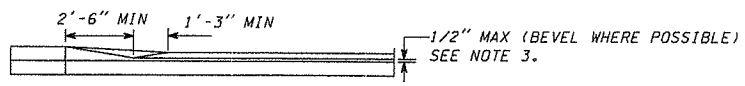

STANDARD APPROACH - HALF ELEVATION

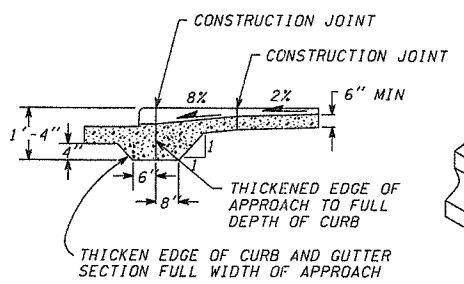

SECTION H-H

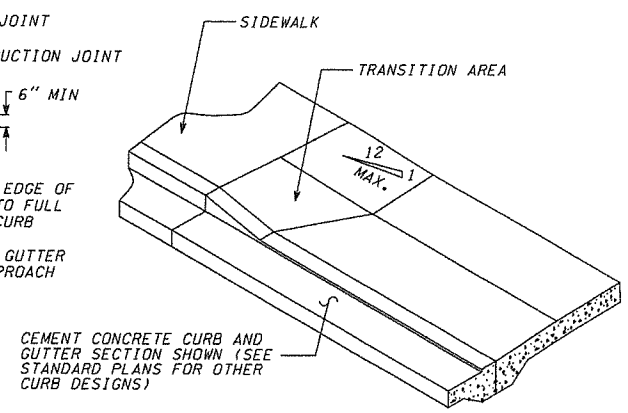

APPROACH TYPE 2 - HALF ISOMETRIC

NOTES:

1. A MINIMUM 3' WIDE ACCESSIBLE ROUTE SHALL BE MAINTAINED IN ALL PEDESTRIAN ACCESSIBLE AREAS.
2. CONTRACTION JOINTS SHALL BE PLACED ALONG SIDEWALKS IN ACCORD WITH SIDEWALK DETAIL. ALL JOINTS SHALL BE CLEANED AND EDGED.
3. CHANGES IN LEVEL UP TO 1/4" MAY BE VERTICAL AND WITHOUT EDGE TREATMENT. CHANGES IN LEVEL BETWEEN 1/4" AND 1/2" SHALL BE BEVELED WITH A SLOPE NO GREATER THAN 2:1.
4. CEMENT CONCRETE APPROACHES SHALL BE CONSTRUCTED OF AIR-ENTRAINED CONCRETE CLASS 3000 AND MAY BE POURED INTEGRAL WITH CURB.
5. EXISTING CURB, GUTTER AND SIDEWALK TO BE SAWCUT AND REMOVED FOR INSTALLATION OF APPROACH.

(B) CEMENT CONCRETE APPROACH DETAIL - TYPE 2

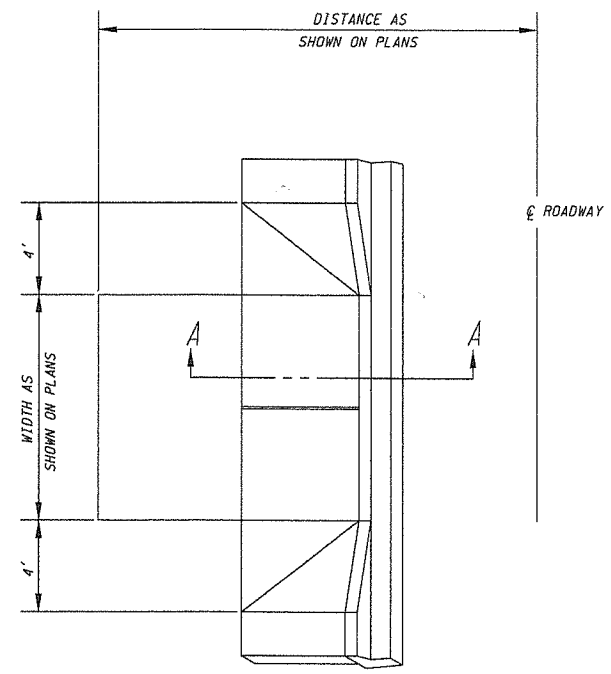

(A) TYPICAL DRIVEWAY ENTRANCE

NTS

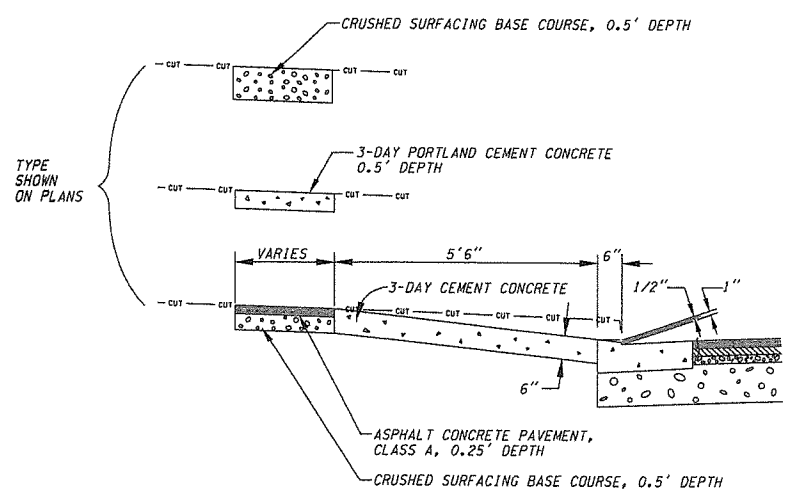

SECTION A-A

NTS

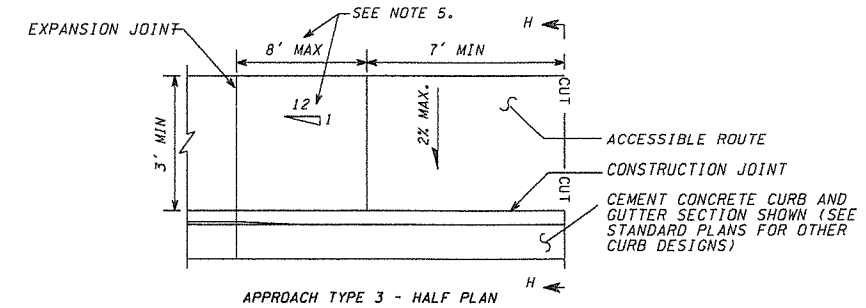

APPROACH TYPE 3 - HALF PLAN

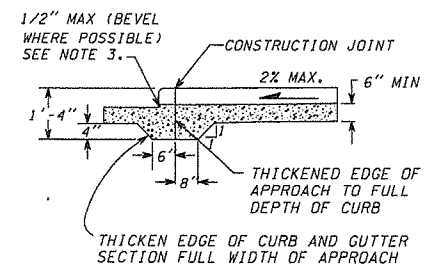

SECTION H-H

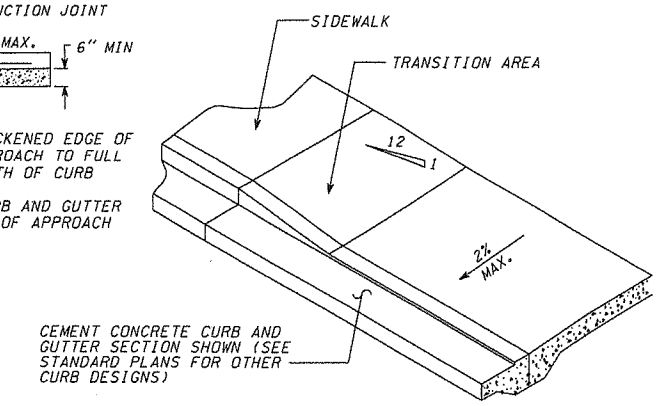

APPROACH TYPE 3 - HALF ISOMETRIC

NOTES:

1. A MINIMUM 3' WIDE ACCESSIBLE ROUTE SHALL BE MAINTAINED IN ALL PEDESTRIAN ACCESSIBLE AREAS.
2. CONTRACTION JOINTS SHALL BE PLACED ALONG SIDEWALKS IN ACCORD WITH SIDEWALK DETAIL. ALL JOINTS SHALL BE CLEANED AND EDGED.
3. CHANGES IN LEVEL UP TO 1/4" MAY BE VERTICAL AND WITHOUT EDGE TREATMENT. CHANGES IN LEVEL BETWEEN 1/4" AND 1/2" SHALL BE BEVELED WITH A SLOPE NO GREATER THAN 2:1.
4. TRANSITION AREA TO BE SLOPED AT 1v TO 12h, UNLESS STREET GRADE WOULD CREATE A TRANSITION LENGTH GREATER THAN 8', THEN THE MAXIMUM LENGTH OF 8' GOVERNS SLOPE.
5. CEMENT CONCRETE APPROACHES SHALL BE CONSTRUCTED OF AIR-ENTRAINED CONCRETE CLASS 3000 AND MAY BE POURED INTEGRAL WITH CURB.
6. EXISTING CURB, GUTTER AND SIDEWALK TO BE SAWCUT AND REMOVED FOR INSTALLATION OF APPROACH.
7. SEE SPECIAL PROVISIONS

(C) CEMENT CONCRETE APPROACH DETAIL - TYPE 3

DESIGNED	MME
DRAWN	BAK
CRP	320322
HOR.	N/A
VERT.	N/A
DATE	11/27/03
DWG.	AD1
SHEET	25 OF 78

CALL 48 HOURS BEFORE YOU DIG
1-800-553-4344
"It's the Law"
NORTHWEST UTILITIES NOTIFICATION CENTER

DOUGLAS B. OWINGS
STATE OF WASHINGTON
EXPIRES SEPT. 25, 2004

DESIGN & ENGINEERING DIVISION
DESIGN SECTION

NE 117th STREET
APPROACH DETAILS

proud past, promising future
CLARK COUNTY
WASHINGTON

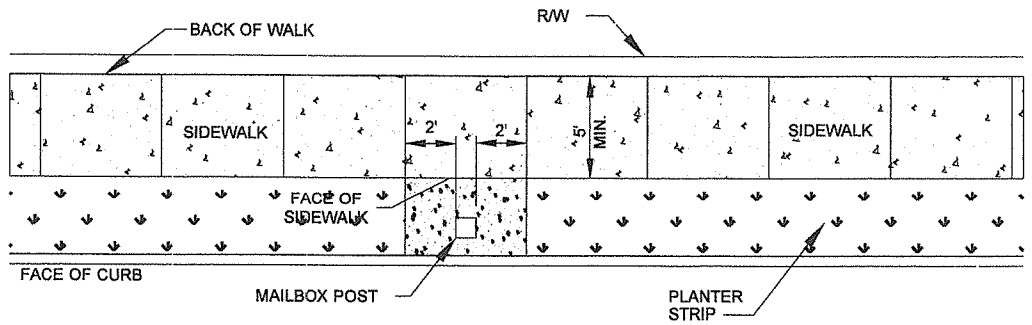

MAILBOX IN PLANTER STRIP

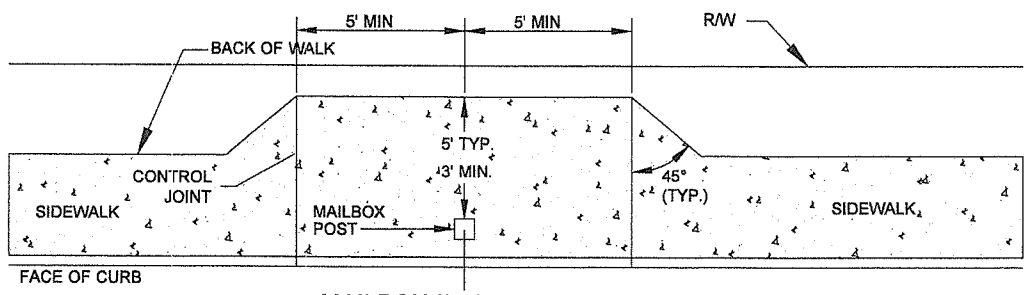

MAILBOX IN SIDEWALK

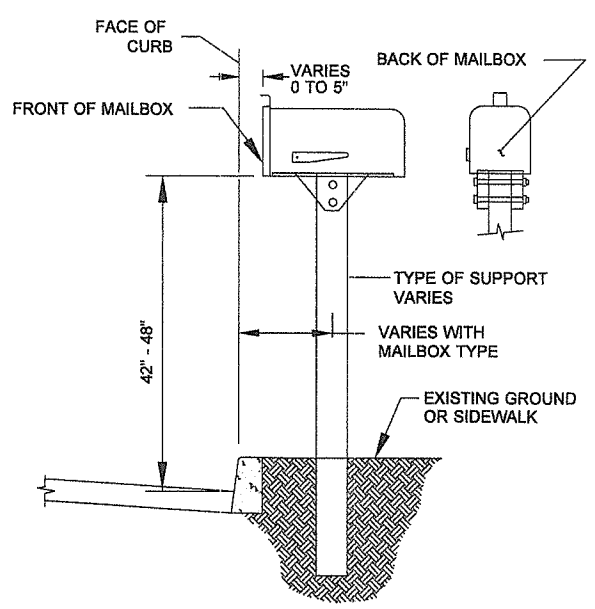

NOTES:

1. SEE CURRENT WSDOT STANDARD PLAN No. H-12 FOR MAILBOX, POST, BRACKET AND OTHER INSTALLATION DETAILS.
2. MAILBOXES MUST BE POSTMASTER APPROVED. CONTACT MIKE WENTZEL (MAINTENANCE MANAGER) AT 992-5052.
3. LOCATION OF MAILBOXES ARE SUBJECT TO APPROVAL BY COUNTY ENGINEERING FOR ACCESS AND SIGHT DISTANCE REQUIREMENTS. CONTACT ENGINEERING SERVICES AT 397-2375 ext. 4997
4. INSTALL EXPANSION JOINT MATERIAL AROUND MAILBOX POST WHEN SET IN SIDEWALK.
5. EXTEND SIDEWALK JOINTS THROUGH WIDENED SIDEWALK SECTION.
6. COLLECTION BOX UNITS (CBU) AND CONCRETE BASE ARE INSTALLED BY THE U.S. POSTAL SERVICE. SEE NOTE 2 FOR CONTACT.

Ⓐ MAILBOX SUPPORT DETAILS

FOR USE AT POINTS OF TANGENCY

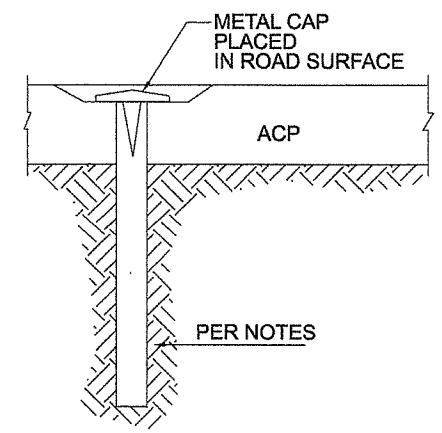

FOR USE IN INTERSECTIONS

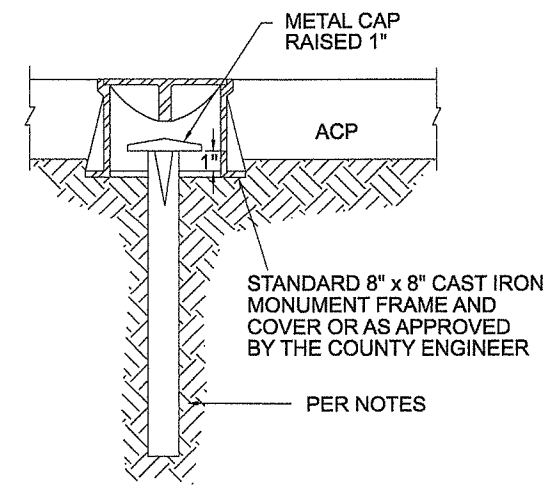

NOTES:

1. ALL MONUMENTS SHALL USE EITHER 5/8" DIAMETER x 30" LONG IRON ROD OR 3/4" DIAMETER x 30" LONG IRON PIPE.
2. ALL MONUMENTS SHALL BE IN ACCORDANCE WITH WAC 196-24-110 AND 332-120-060, AND MEET THE REQUIREMENTS OF THE RCW 58.17.240, 58.09.120 AND 58.09.130.

Ⓑ MONUMENT CASE DETAIL

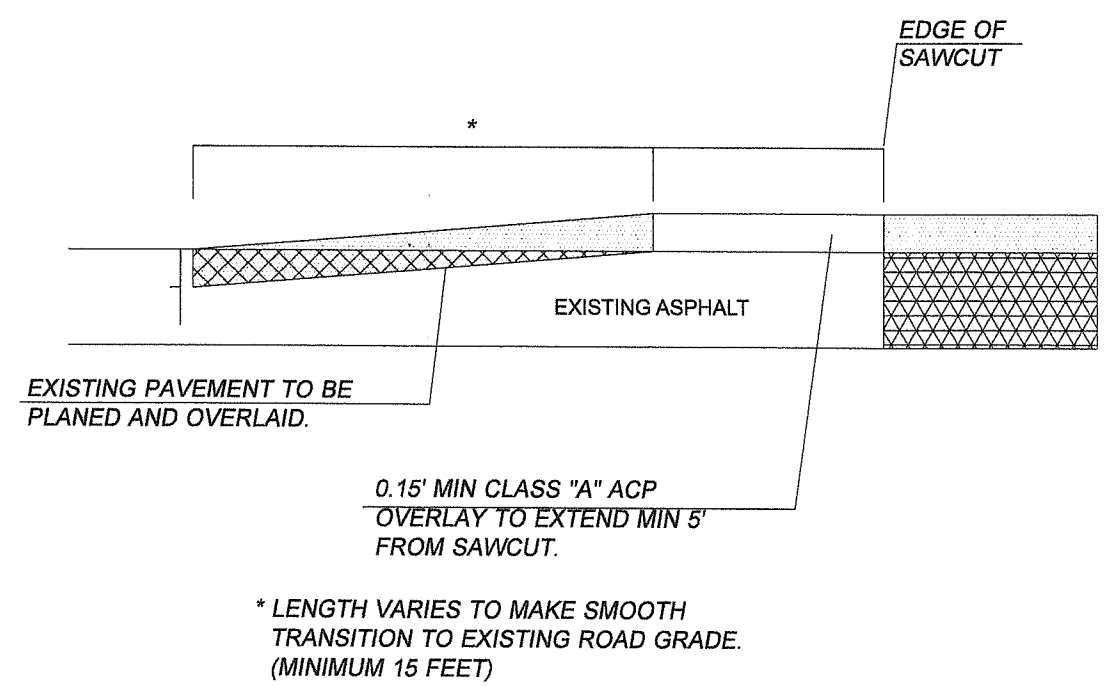

* LENGTH VARIES TO MAKE SMOOTH TRANSITION TO EXISTING ROAD GRADE. (MINIMUM 15 FEET)

Ⓒ PLANING BITUMINOUS PAVEMENT DETAIL

DESIGNED	MME
DRAWN	BAK
CRP	320322
HOR.	N/A
VERT.	N/A
DATE	11/27/03
DWG.	RD1
SHEET	26 OF 78

CALL 48 HOURS BEFORE YOU DIG 1-800-553-4344 "It's the Law" NORTHWEST UTILITIES NOTIFICATION CENTER

JOHN B. OWINGS STATE OF WASHINGTON 19990 EXPIRES SEPT 25, 2004

DESIGN & ENGINEERING DIVISION
DESIGN SECTION

NE 117TH STREET
MISC. DETAILS

proud past, promising future
CLARK COUNTY WASHINGTON

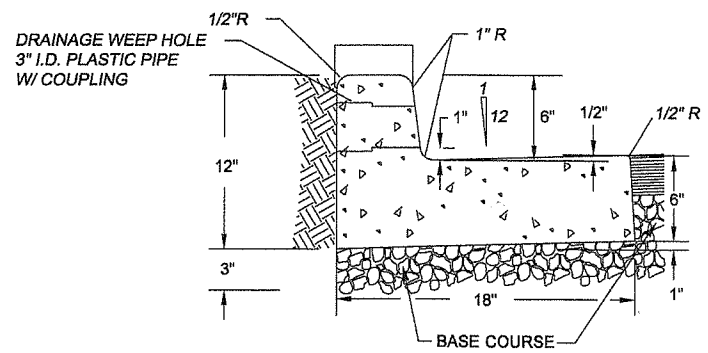

(A) TYPE A-1 CURB & GUTTER

SEE WDOT STANDARD
PLAN No. F-1

NOTES

1. CONCRETE SHALL BE 3000 PSI MIN. (CLASS 3000) 3 1/2" SLUMP (MAX.)
2. CURBS ADJACENT TO PAVEMENT OR SIDEWALK TO HAVE EXPANSION AND/OR CONTRACTION JOINTS TO MATCH EXISTING PATTERNS.
3. 3/8" EXPANSION JOINTS TO BE PROVIDED AT EACH POINT OF TANGENCY OF THE CURB, COLD JOINTS, EACH SIDE OF INLET STRUCTURES AND DRIVEWAYS. MATERIAL TO BE PRE-MOLDED, ASPHALT IMPREGNATED AND NON EXTRUDING.
4. CONTRACTION JOINT SPACING NOT TO EXCEED 15 FEET. THE DEPTH OF THE JOINT SHALL BE AT LEAST 1-1/2 INCHES. WEEP HOLES TO BE CENTERED WITH CONTRACTION JOINTS.
5. BASE COURSE SHALL BE TO SUBGRADE OF STREET SECTION OR 3 INCHES, WHICHEVER IS GREATER, AND SHALL EXTEND 6" BEHIND THE CURB.
6. DRAINAGE WEEP HOLES TO BE 3" I.D. PLASTIC PIPE WITH COUPLING. FINISH PIPE END FLUSH WITH FACE OF CURB.
7. GROUT ANY VOIDS IN CONCRETE SURROUNDING PIPE.
8. DRAINAGE ACCESS THROUGH EXISTING CURBS SHALL BE CORE DRILLED.
9. CURB TO BE BRUSH FINISHED. ALL EXISTING EDGES SHALL BE SAWCUT.
10. ALL MATERIALS AND WORKMANSHIP FOR TYPE E-1 & A-1 SHALL BE IN ACCORDANCE WITH WDOT STANDARD PLAN No. F-1, APPROVED 7/18/97 OR MOST CURRENT REVISION.

DESIGNED	MME
DRAWN	BAK
CRP	320322
HOR.	N/A
VERT.	N/A
DATE	11/27/03
DWG:	RD2
SHEET	27 OF 78

CALL 48 HOURS BEFORE YOU DIG
1-800-553-4344
"It's the Law"
NORTHWEST UTILITIES NOTIFICATION CENTER

DON B. OWINGS
STATE OF WASHINGTON
PROFESSIONAL ENGINEER
EXPIRES SEPT. 25, 2004

DESIGN & ENGINEERING DIVISION
DESIGN SECTION

NE 117TH STREET
MISC. DETAILS

proud past, promising future
CLARK COUNTY
WASHINGTON

CRP NO. 320322

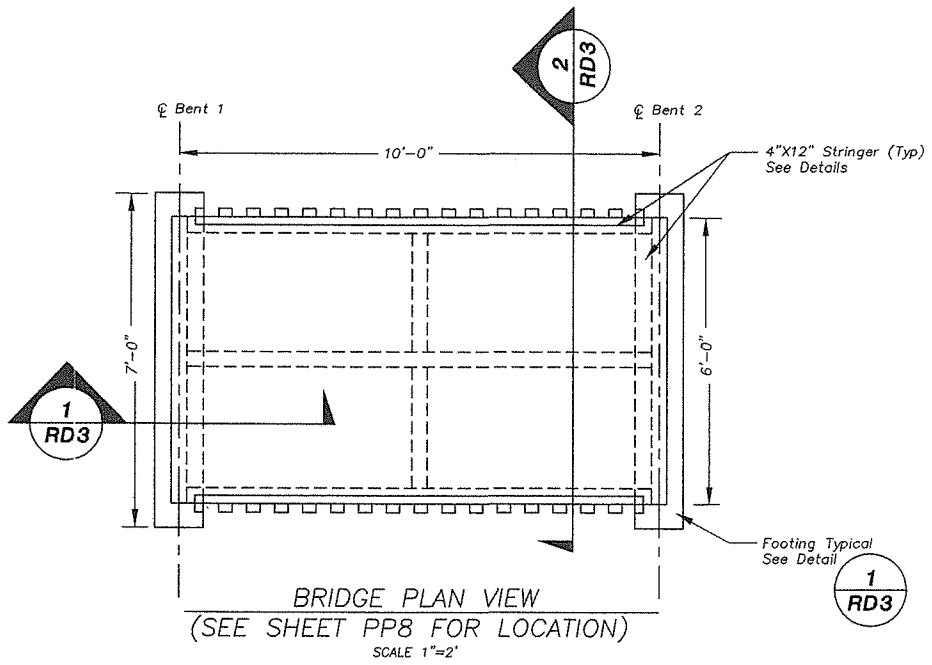

BRIDGE PLAN VIEW
(SEE SHEET PP8 FOR LOCATION)
SCALE 1"=2'

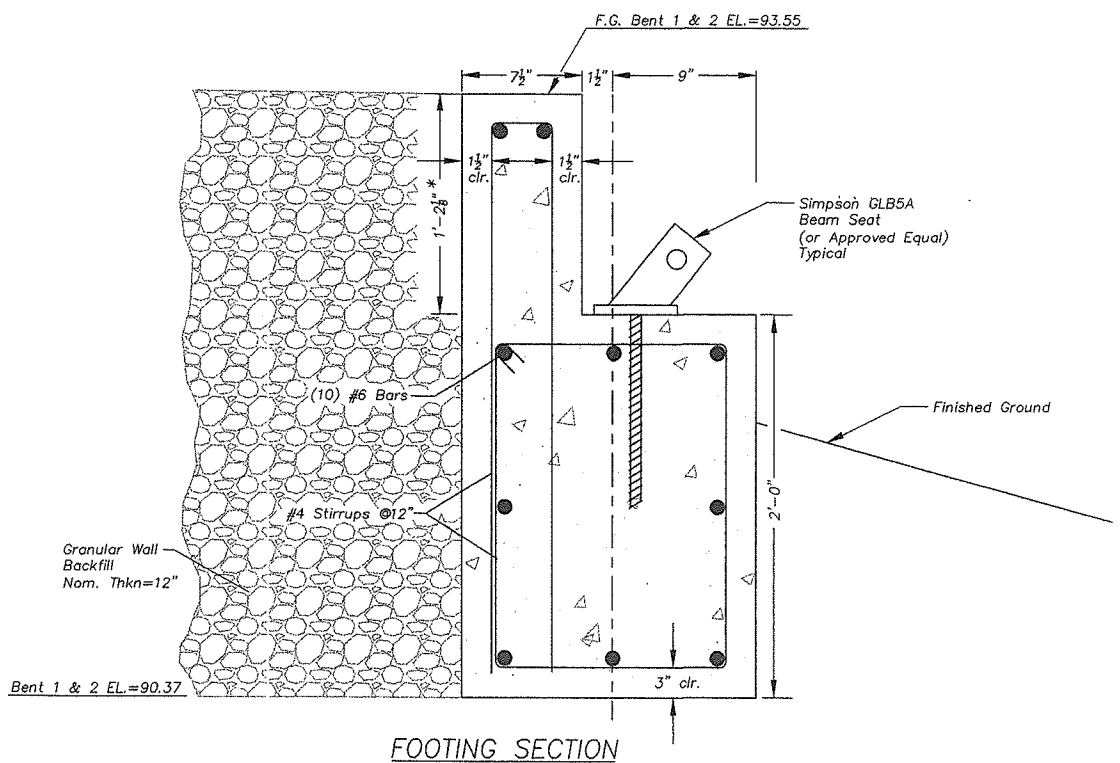

FOOTING SECTION
DETAIL 1 RD3
SCALE ½"=1'

*Field Verify Dimension Prior to Pouring

GENERAL NOTES:

1. ALL MATERIAL AND WORK SHALL BE IN ACCORDANCE WITH THE REQUIREMENTS OF THE CURRENT EDITION OF THE WASHINGTON STATE DEPARTMENT OF TRANSPORTATION STANDARD SPECIFICATIONS FOR ROAD, BRIDGE, AND MUNICIPAL CONSTRUCTION (ENGLISH), AND AMENDMENTS.
2. BRIDGE IS DESIGNED FOR 85 PSF LIVE LOAD IN ACCORDANCE WITH AASHTO STANDARD SPECIFICATIONS FOR HIGHWAY BRIDGES, 16TH EDITION, 1996. ALL TIMBER MEMBERS ARE DESIGNED BY SERVICE LOAD DESIGN METHOD. ALL CONCRETE MEMBERS ARE DESIGNED BY LOAD FACTOR DESIGN METHOD.
3. ALL REINFORCING STEEL SHALL CONFORM TO AASHTO M31. NO SPLICES SHALL BE PERMITTED.
4. PLACE BAR 2" CLEAR OF THE NEAREST FACE OF CONCRETE (UNLESS SHOWN OTHERWISE).
5. ALL CONCRETE SHALL BE CL. 3000.
6. ALL SAWN LUMBER SHALL BE WEST COAST DOUGLAS FIR #1. ALL LUMBER TO BE TREATED WITH PENTACHLOROPHENOL IN A LIGHT SOLVENT TO A MINIMUM NET RETENTION OF 0.4 PCF PER AASHTO M133.
7. ALL FASTENERS SHALL CONFORM TO A307, GRADE A.

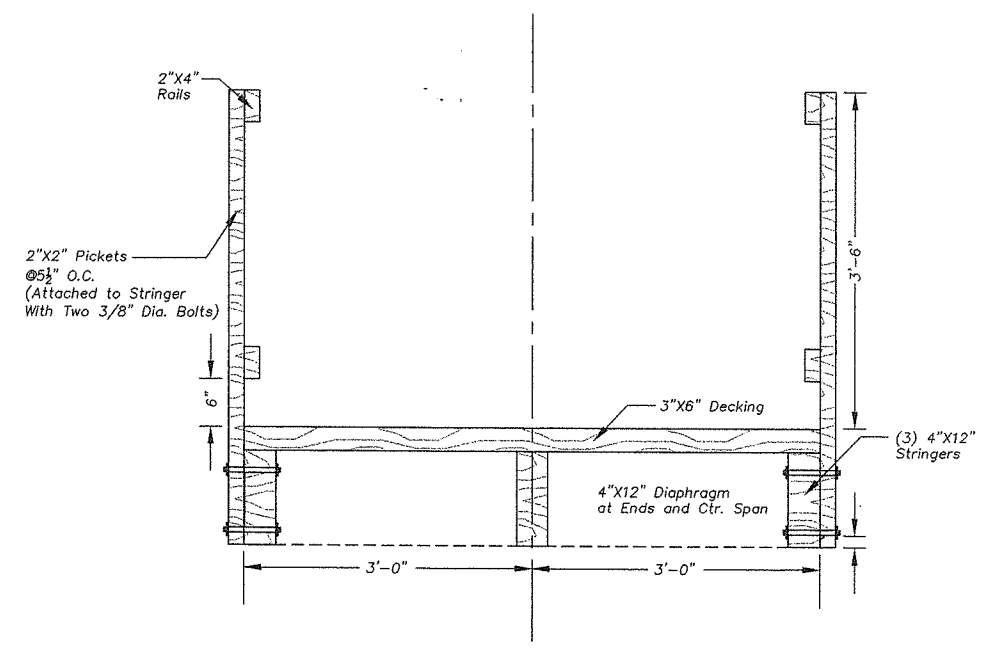

BRIDGE X-SECTION
DETAIL 2 RD3
SCALE 1"=1'

DESIGNED SCL/WAB
DRAWN KLB
CRP 320322
HOR. NTS
VERT. NTS
DATE 03-26-04
DWG. RD3
SHEET 28 OF 78

CALL 48 HOURS BEFORE YOU DIG
1-800-553-4344
"It's the Law"
CLARK COUNTY UTILITIES COORDINATING COUNCIL

DESIGN & ENGINEERING DIVISION
DESIGN SECTION

NE 117TH STREET
FOOT BRIDGE
DETAILS

WAYNE BAUER
STATE OF WASHINGTON
23240
REGISTERED PROFESSIONAL ENGINEER
EXPIRES 4/25/04

W&H PACIFIC
9755 SW Barnes Road
Suite 300
Portland, Oregon 97225
(503)638-0455
(503)638-0775 Fax
whpacific.com

proud past, promising future
CLARK COUNTY
WASHINGTON

4-0466-0801
T119RD3.DWG

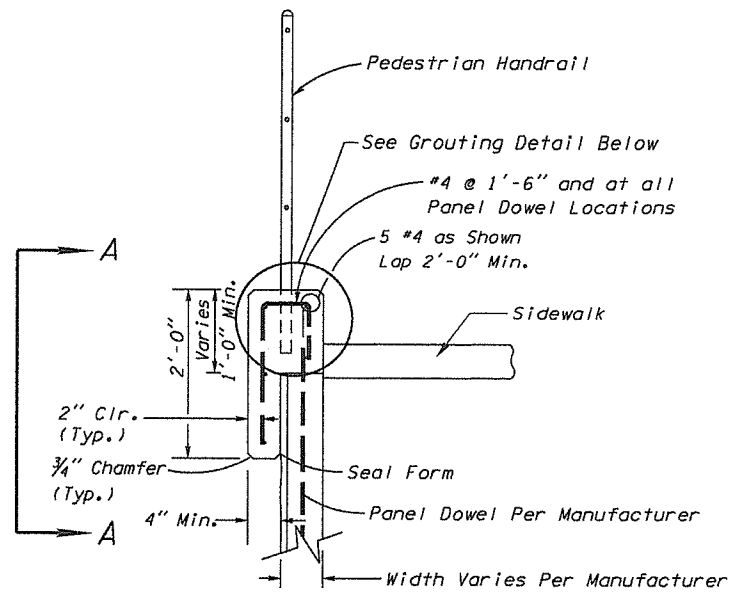

C.I.P. COPING DETAIL

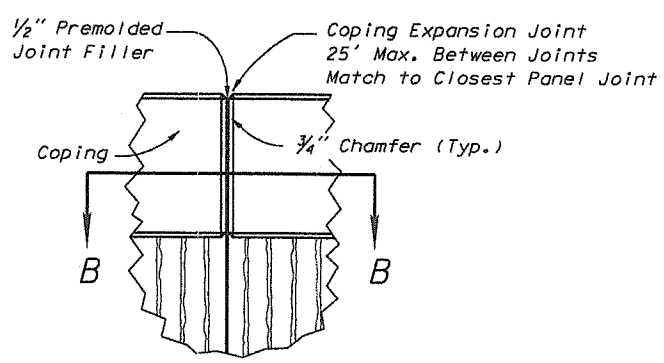

VIEW A-A

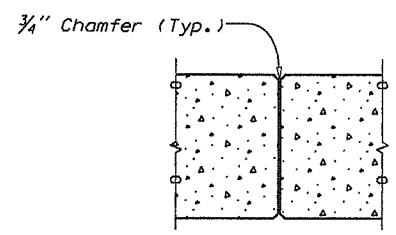

VIEW B-B

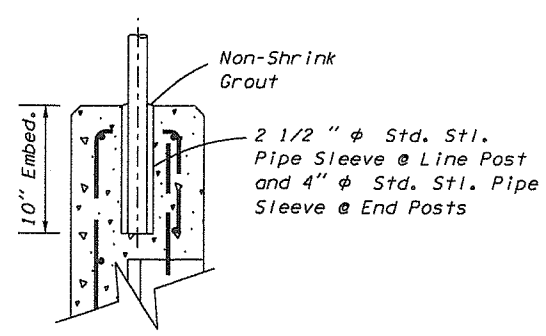

GROUTING DETAIL

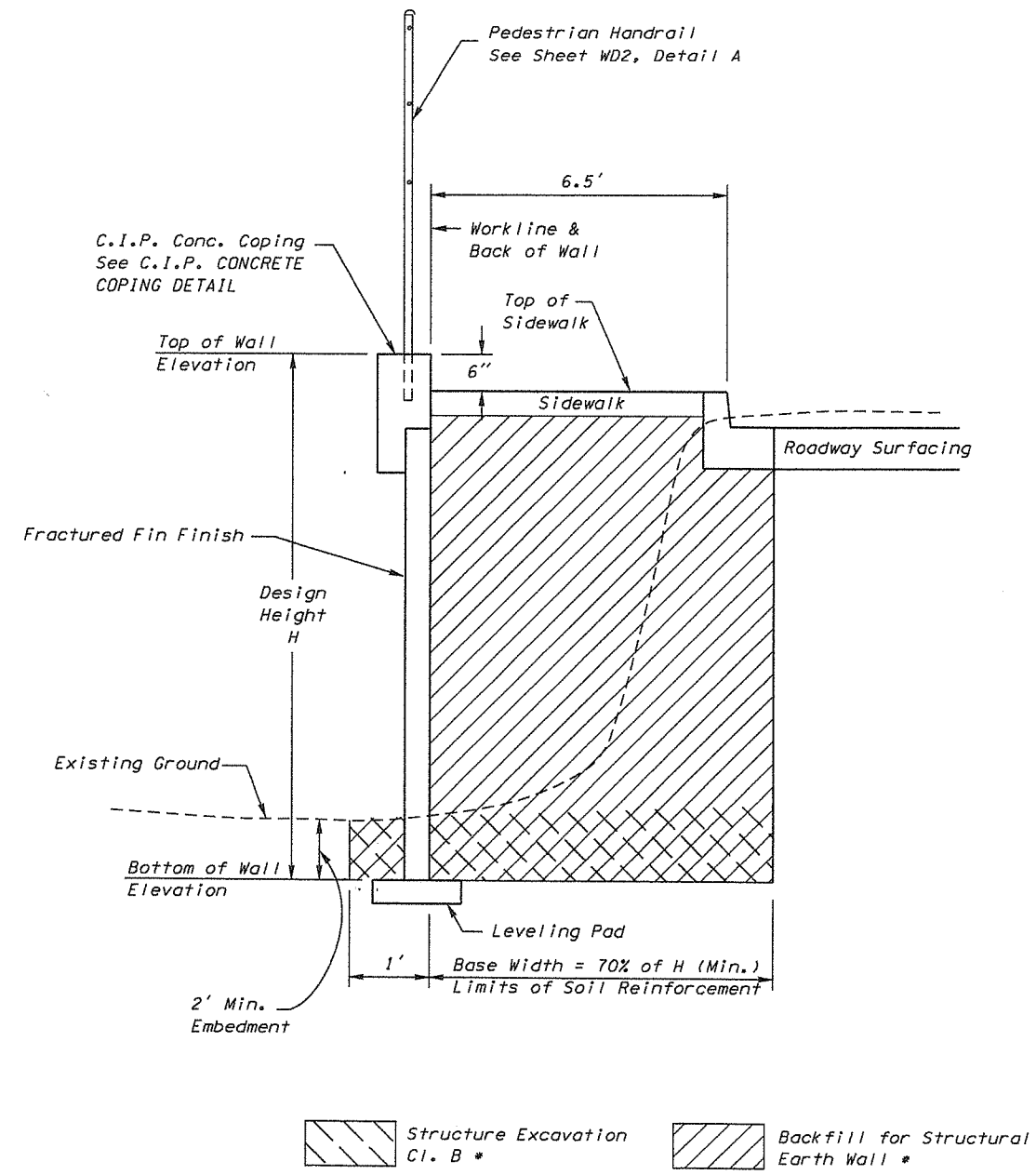

* Items included in payment of wall per Sq. Ft.

TYPICAL SECTION

Ⓐ STRUCTURAL EARTH WALL W/HANDRAIL DETAIL

DESIGN & ENGINEERING DIVISION
DESIGN SECTION

NE 117TH STREET
WALL DETAILS

CALL 48 HOURS BEFORE YOU DIG
1-800-553-4344
"It's the Law"
NORTHWEST UTILITIES NOTIFICATION CENTER

DESIGNED MME
DRAWN BAK
CRP 320322
HOR. N/A
VERT. N/A
DATE 11/27/03
DWG: WD1
SHEET 29 OF 78

DON B. OWINGS
STATE OF WASHINGTON
EXPIRES SEPT. 25, 2004

proud past, promising future
CLARK COUNTY WASHINGTON

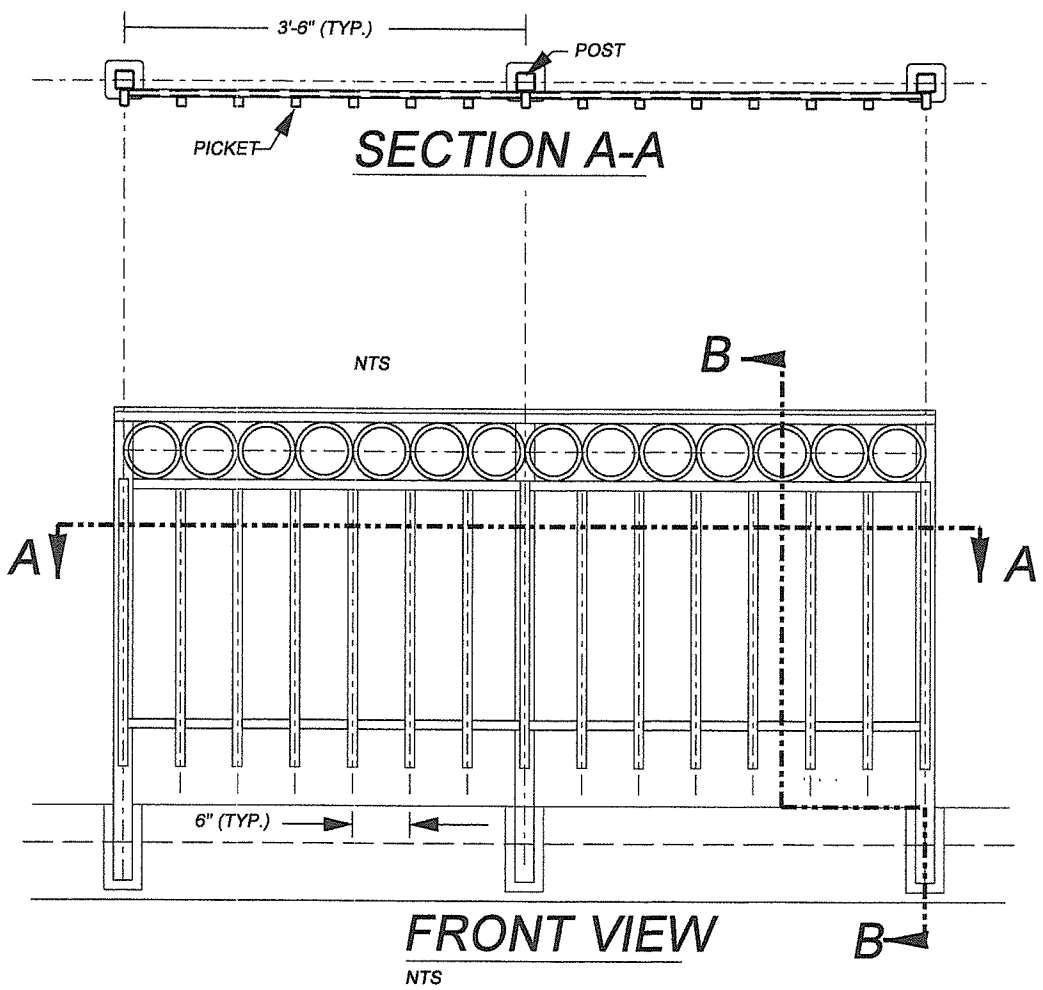

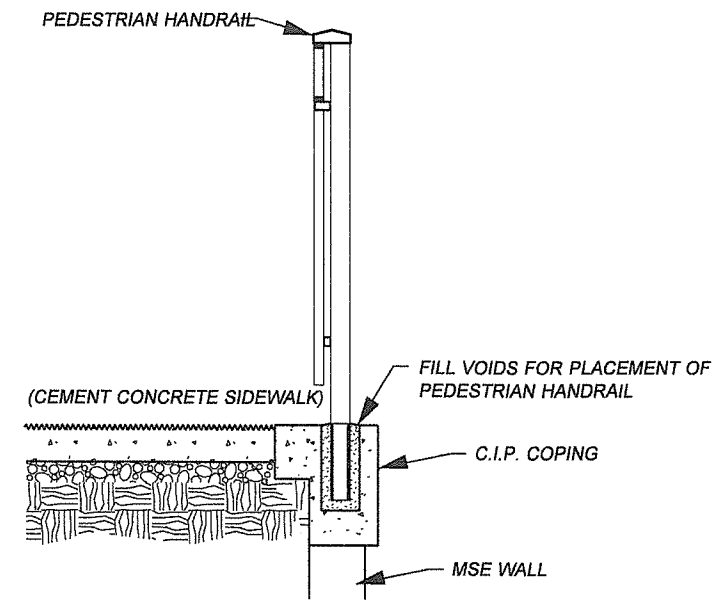

NOTES

THE STEEL PEDESTRIAN HANDRAIL SHALL BE INSTALLED BY THE CONTRACTOR WHERE SHOWN ON THE PLAN SHEETS OR WHERE DIRECTED BY THE ENGINEER.

THE DETAIL IS A GRAPHIC REPRESNTATION OF STYLE AND IS NOT INTENDED AS DETAILED WORKING DRAWINGS. IT SHALL BE THE RESPONSIBILITY OF THE CONTRACTOR TO SUBMIT A FINAL DESIGN AND WORKING DRAWINGS FOR FINAL APPROVAL BY THE CONTRACTING AGENCY. ALL WORK SHALL MEET CODE REQUIREMENTS.

THE CONTRACTOR SHALL PROVIDE PROOF OF WORKMANSHIP AND CRAFTSMANSHIP BY THE COMPANY SUPPLYING AND INSTALLING THE PEDESTRIAN HANDRAIL. THIS SHALL INCLUDE EXAMPLES OF WORK AND A MINIMUM OF 5 YEARS EXPERIENCE.

ON SITE WELDING WILL NOT BE ALLOWED.

A COATING OF POLYESTER RESIN OVER HOT DIPPED GALVANIZED STEEL (OR APPROVED EQUAL) FOR CORROSION PROTECTION IS MANDATORY. ALL MATERIAL SHALL BE (PAINTED) BLACK AS SPECIFIED IN THE SPECIAL PROVISIONS.

A LIMITED WARRANTY SHALL COVER MATERIALS AND WORKMANSHIP.

SEE SPECIAL PROVISIONS.

Ⓐ PEDESTRIAN HANDRAIL

DESIGNED	MME
DRAWN	BAK
CRP	320322
HOR.	N/A
VERT.	N/A
DATE	11/21/03
DWG#	WD2
SHEET	30 OF 78

CALL 48 HOURS BEFORE YOU DIG
1-800-553-4344
"It's the Law"
NORTHWEST UTILITIES NOTIFICATION CENTER

DON B. OWINGS
STATE OF WASHINGTON
EXPIRES SEPT. 25, 2004

DESIGN & ENGINEERING DIVISION
DESIGN SECTION

NE 117TH STREET
WALL DETAILS

proud past, promising future
CLARK COUNTY
WASHINGTON

MSE WALL NO. 1
SEE SHEET PP2 FOR PLAN VIEW

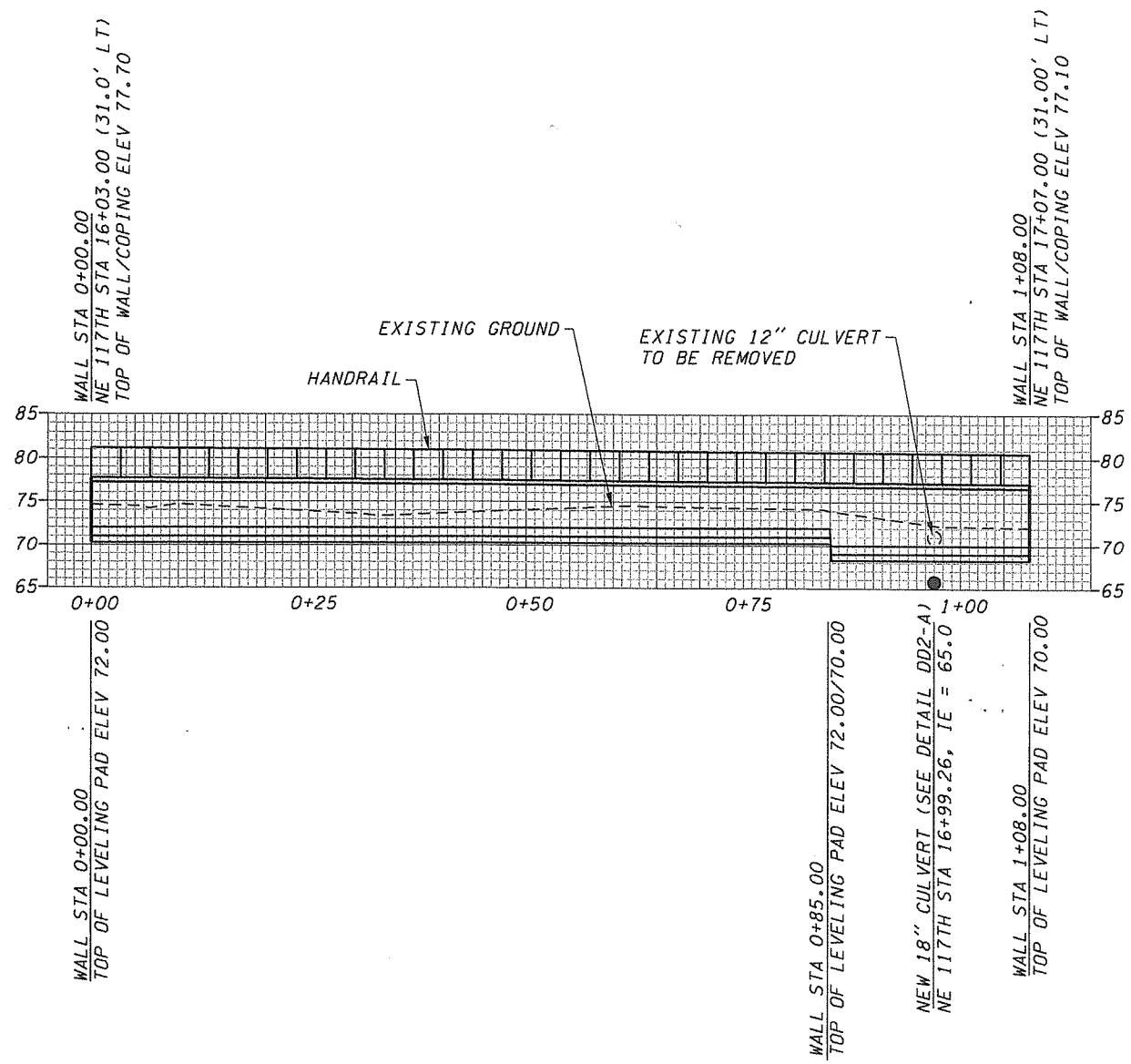

WALL PROFILE KEY

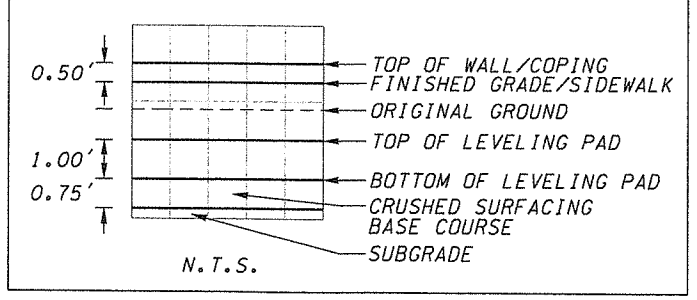

NOTES:
1. SEE SPECIAL PROVISION "STRUCTURAL EARTH WALL W/HANDRAIL"
2. SEE RETAINING DETAILS, WD1-A

DESIGNED	ATH
DRAWN	CRB
CRP	320322
HOR.	1" = 10'
VERT.	1" = 10'
DATE	11/27/03
DWG:	WP1
SHEET	31 OF 78

CALL 48 HOURS BEFORE YOU DIG
1-800-553-4344
"It's the Law"
NORTHWEST UTILITIES NOTIFICATION CENTER

DON L. DOWNING
STATE OF WASHINGTON
32005
REGISTERED PROFESSIONAL ENGINEER
EXPIRES SEPT. 25, 2004

DESIGN & ENGINEERING DIVISION
DESIGN SECTION

NE 117th STREET
WALL PROFILE

proud past, promising future
CLARK COUNTY
WASHINGTON

MSE WALL NO. 2
SEE SHEET PP3 FOR PLAN VIEW

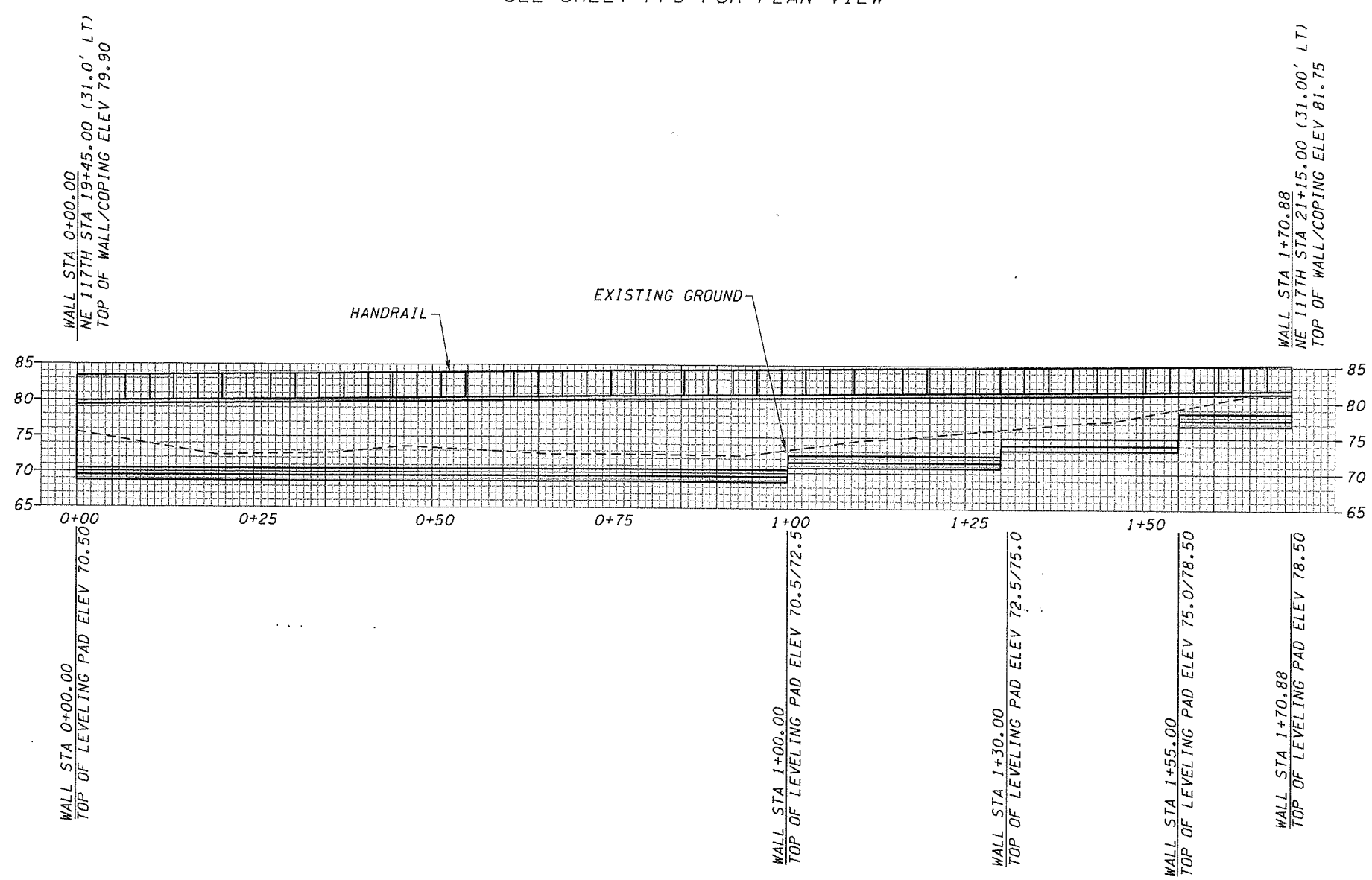

WALL PROFILE KEY

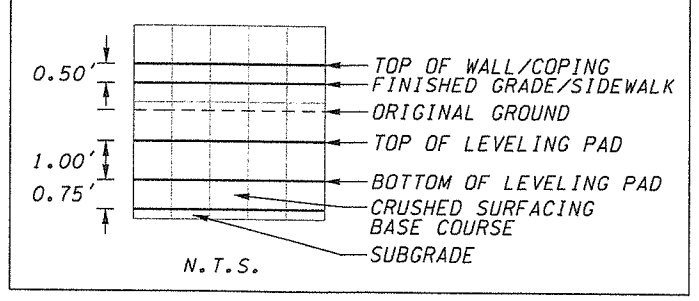

NOTES:
1. SEE SPECIAL PROVISION "STRUCTURAL EARTH WALL W/HANDRAIL"
2. SEE RETAINING DETAILS, WD1-A

DESIGNED	ATH
DRAWN	CRB
CRP	320322
HOR.	1" = 10'
VERT.	1" = 10'
DATE	11/21/03
DWG:	WP2
SHEET	32 OF 78

CALL 48 HOURS BEFORE YOU DIG
1-800-553-4344
"It's the Law"
NORTHWEST UTILITIES NOTIFICATION CENTER

JOHN B. OWINGS
STATE OF WASHINGTON
REGISTERED PROFESSIONAL ENGINEER
EXPIRES SEPT. 28, 2004

DESIGN & ENGINEERING DIVISION
DESIGN SECTION

NE 117th STREET
WALL PROFILE

proud past, promising future
CLARK COUNTY
WASHINGTON

MSE WALL NO. 3

SEE SHEETS PP3 & PP4 FOR PLAN VIEW

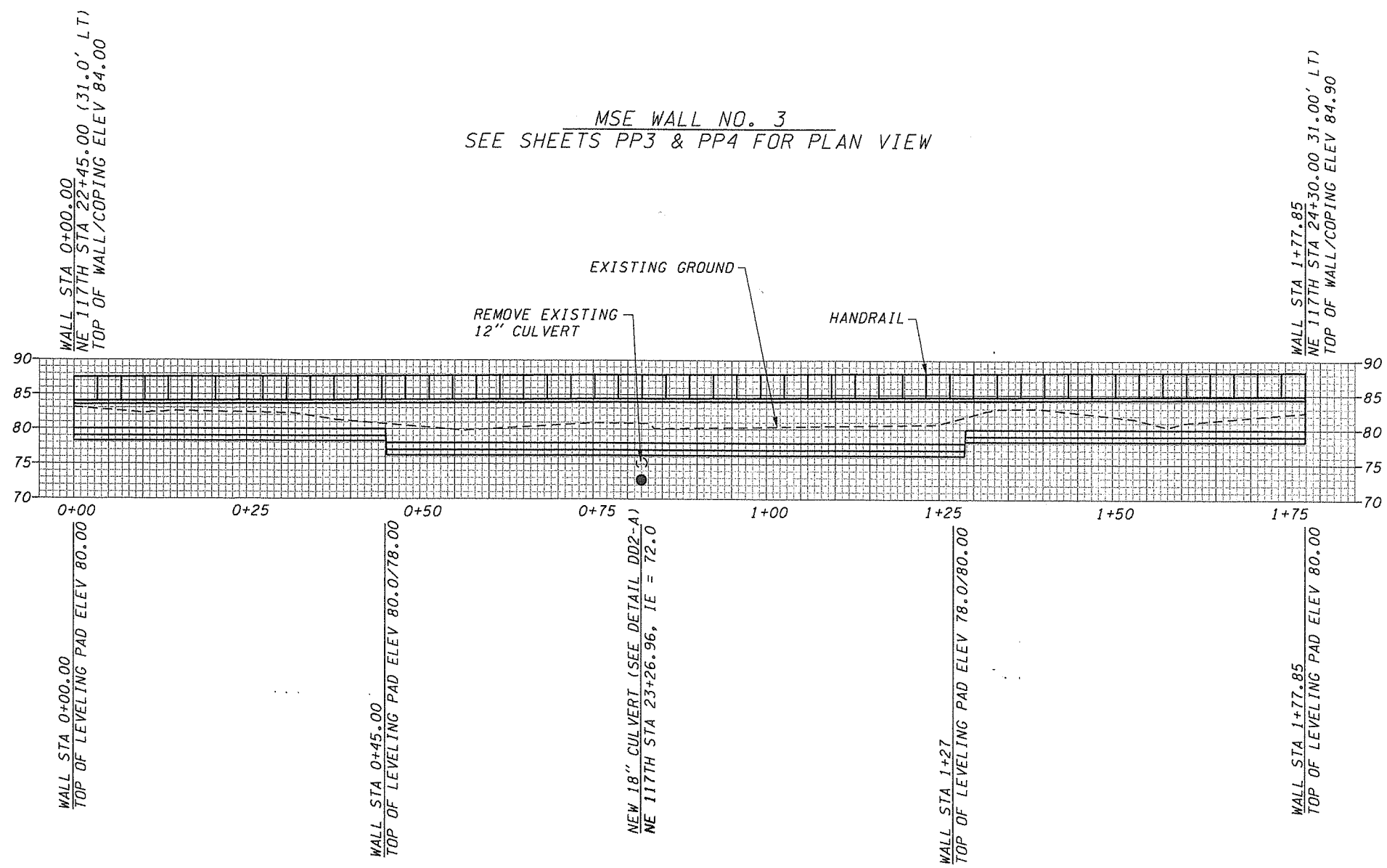

WALL PROFILE KEY

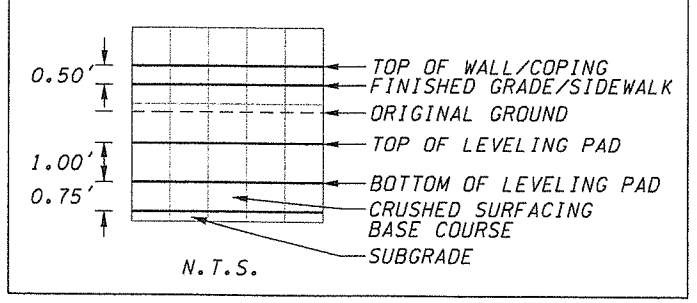

NOTES:

1. SEE SPECIAL PROVISION "STRUCTURAL EARTH WALL W/HANDRAIL"
2. SEE RETAINING DETAILS, WD1-A

DESIGNED	ATH
DRAWN	CRB
CRP	320322
HOR.	1" = 10'
VERT.	1" = 10'
DATE	11/27/03
DWG:	WP3
SHEET	33 OF 78

CALL 48 HOURS BEFORE YOU DIG
1-800-553-4344
"It's the Law"
NORTHWEST UTILITIES NOTIFICATION CENTER

DON B. OWINGS
STATE OF WASHINGTON
EXPIRES SEPT. 25, 2004

DESIGN & ENGINEERING DIVISION
DESIGN SECTION

NE 117th STREET
WALL PROFILE

proud past, promising future
CLARK COUNTY WASHINGTON

NOTES:
1. SEE SPECIAL PROVISION "STRUCTURAL EARTH WALL W/HANDRAIL"
2. SEE RETAINING DETAILS, WD1-A

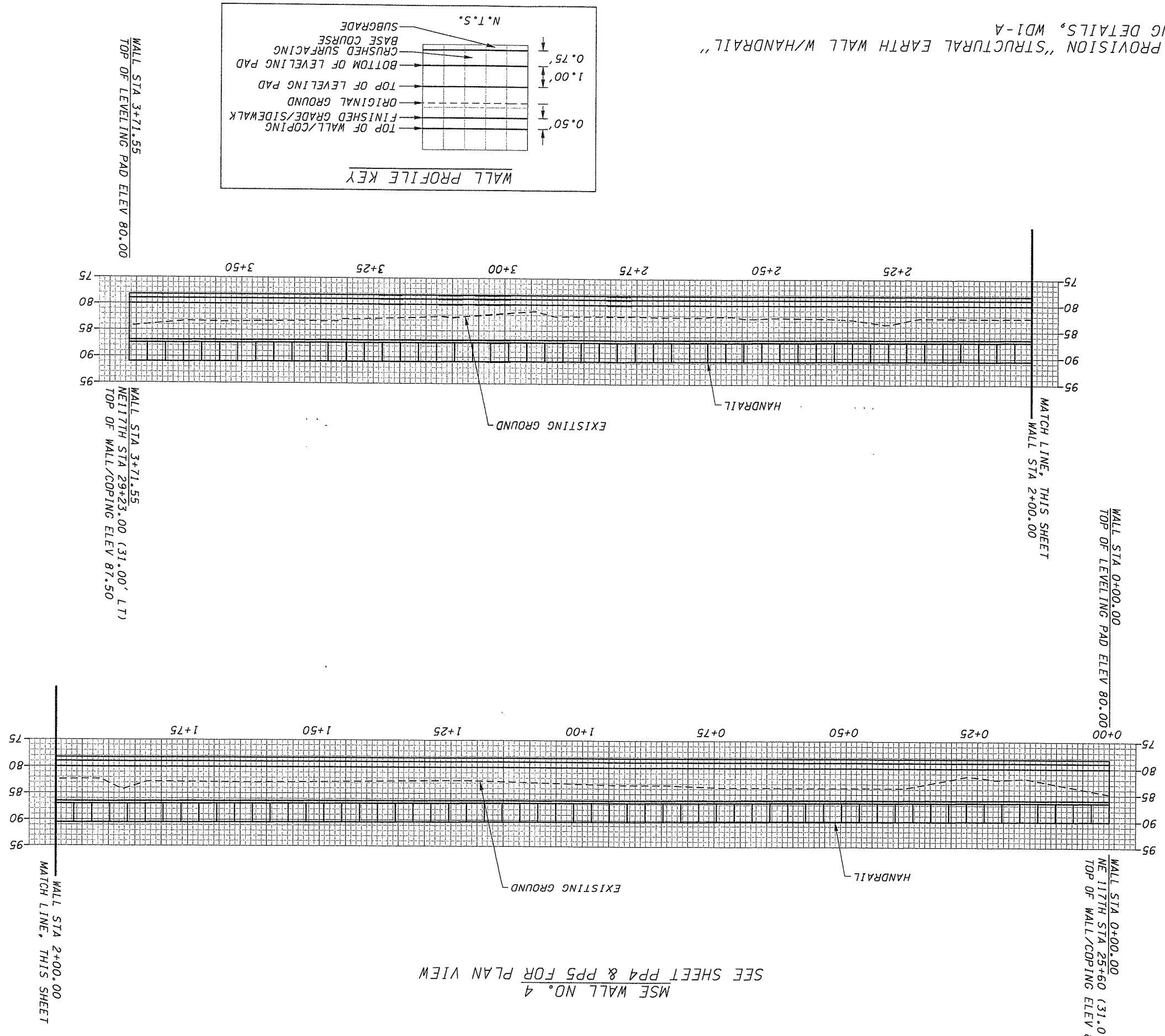

MSE WALL NO. 4
SEE SHEET PP4 & PP5 FOR PLAN VIEW

CLARK COUNTY WASHINGTON
proud past, promising future

DESIGN & ENGINEERING DIVISION
DESIGN SECTION

NE 117th STREET
WALL PROFILE

DON B. OWINGS
STATE OF WASHINGTON
REGISTERED PROFESSIONAL ENGINEER
EXPIRES SEPT. 25, 2004

CALL 48 HOURS BEFORE YOU DIG
1-800-553-4344
"It's the Low"
NORTHWEST UTILITIES NOTIFICATION CENTER

DESIGNED	ATH
DRAWN	CRB
CRP	320322
HOR.	1" = 10'
VERT.	1" = 10'
DATE	11/27/03
DWG:	WP4
SHEET	34 OF 78

MSE WALL NO. 5
SEE SHEET PP5 FOR PLAN VIEW

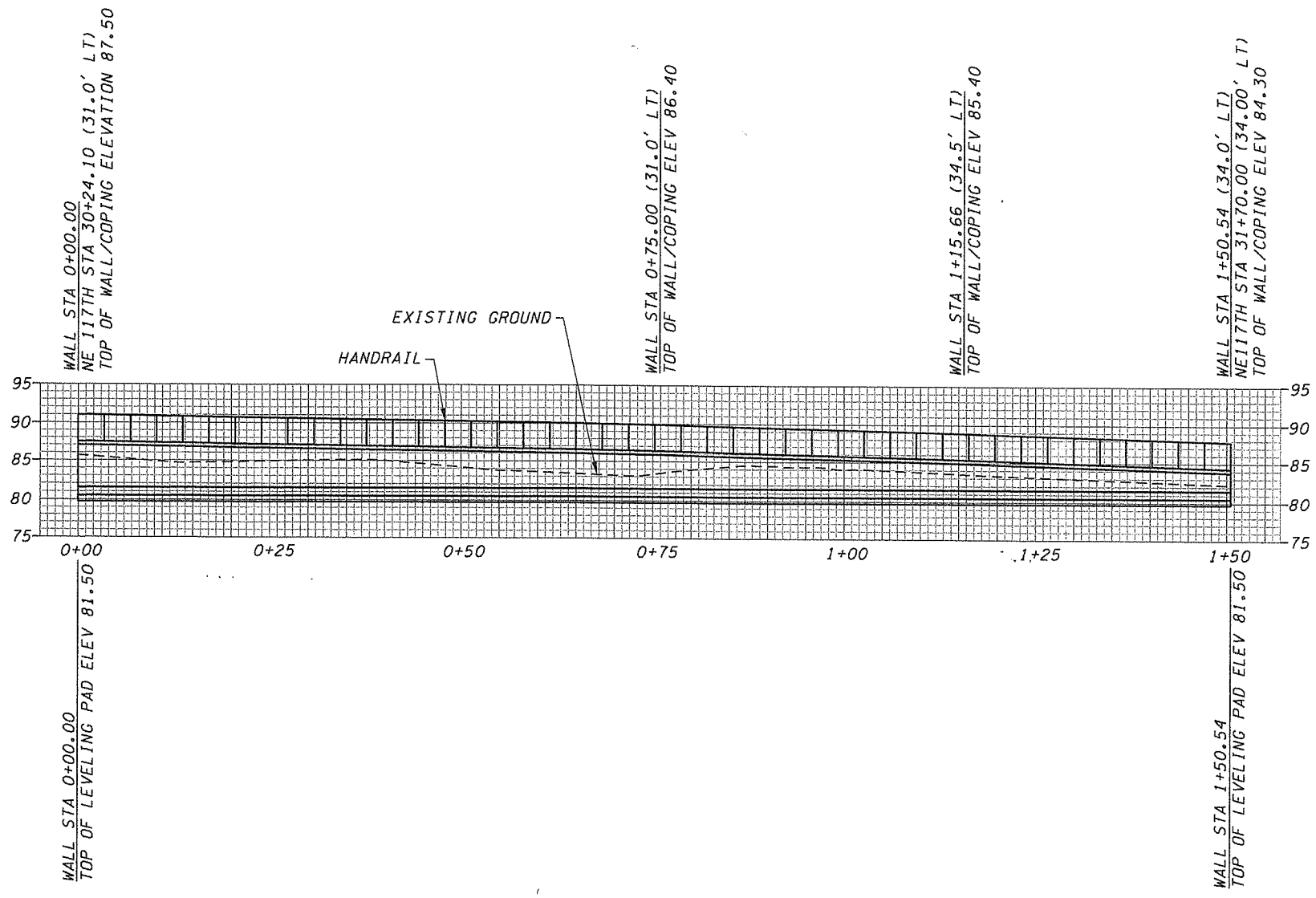

WALL PROFILE KEY

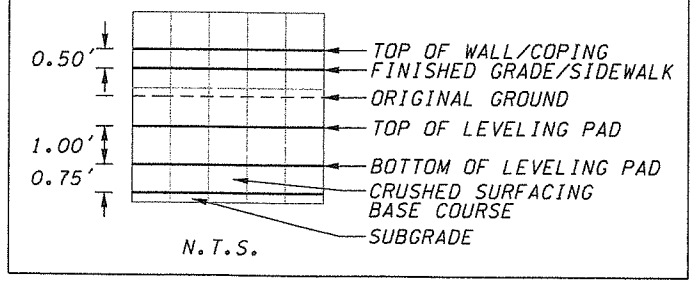

NOTES:
1. SEE SPECIAL PROVISION "STRUCTURAL EARTH WALL W/HANDRAIL"
2. SEE RETAINING DETAILS, WD1-A

CALL 48 HOURS BEFORE YOU DIG
1-800-553-4344
"It's the Law"
NORTHWEST UTILITIES NOTIFICATION CENTER

DESIGNED	ATH
DRAWN	CRB
CRP	320322
HOR.	1" = 10'
VERT.	1" = 10'
DATE	11/27/03
DWG:	WP5
SHEET	35 OF 78

DESIGN & ENGINEERING DIVISION
DESIGN SECTION

NE 117th STREET
WALL PROFILE

proud past, promising future
CLARK COUNTY WASHINGTON

MSE WALL NO. 6

SEE SHEET PP6 FOR PLAN VIEW

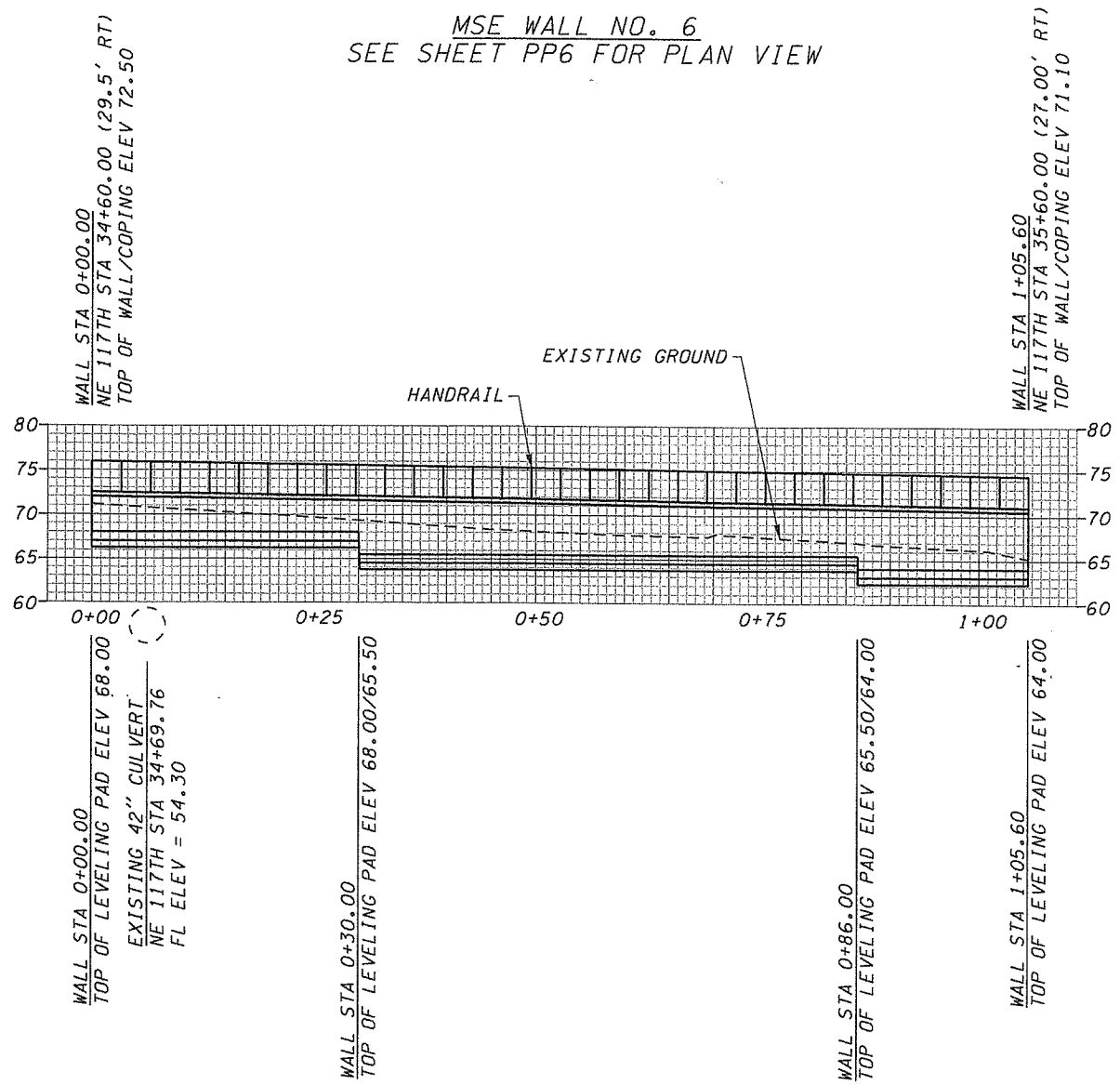

WALL PROFILE KEY

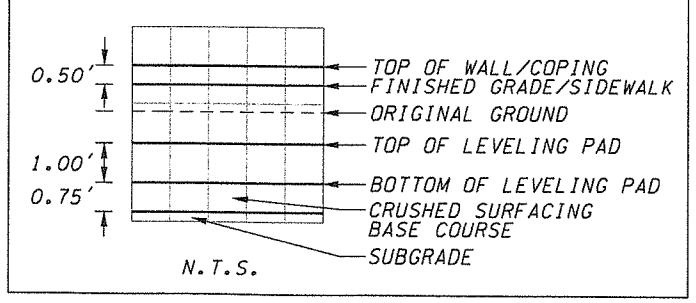

NOTES:

1. SEE SPECIAL PROVISION "STRUCTURAL EARTH WALL W/HANDRAIL"
2. SEE RETAINING DETAILS, WD1-A

CALL 48 HOURS BEFORE YOU DIG
1-800-553-4344
"It's the Law"
NORTHWEST UTILITIES NOTIFICATION CENTER

DESIGNED	ATH
DRAWN	CRB
CRP	320322
HOR.	1" = 10'
VERT.	1" = 10'
DATE	11/27/03
DWG:	WP6
SHEET	36 OF 78

DANA B. OWINGS
STATE OF WASHINGTON
PROFESSIONAL ENGINEER
EXPIRES SEPT. 25, 2004

DESIGN & ENGINEERING DIVISION
DESIGN SECTION

NE 117th STREET
WALL PROFILE

proud past, promising future
CLARK COUNTY WASHINGTON

* SEE WSDOT STANDARD PLAN D-1c

WALL STA 0+00.00
TOP OF FOOTING ELEV 68.00

MATCH LINE, THIS SHEET
WALL STA 2+50.00

WALL STA 2+64.00
TOP OF WALL ELEV 84.00

WALL STA 3+12.00
TOP OF WALL ELEV 85.50

WALL STA 3+60.00
TOP OF WALL ELEV 87.50

WALL STA 4+08.00
TOP OF WALL ELEV 88.50

WALL STA 4+80.00
NE 117TH STA 41+51.6 (30.5' RT)
TOP OF WALL ELEV 89.50

WALL STA 4+90.97
NE 117TH STA 41+78.00 (55.00' RT)
TOP OF WALL ELEV 89.50

WALL STA 4+90.97
TOP OF FOOTING ELEV 83.00

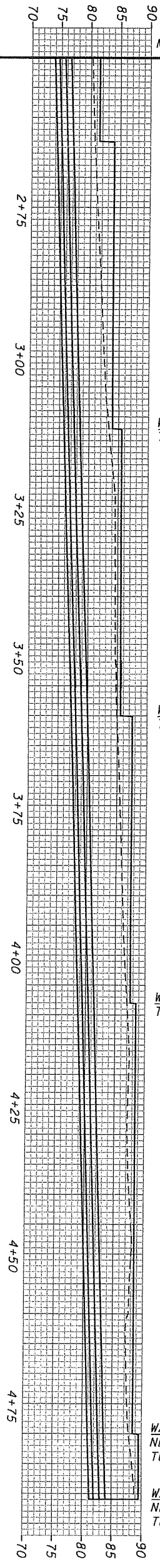

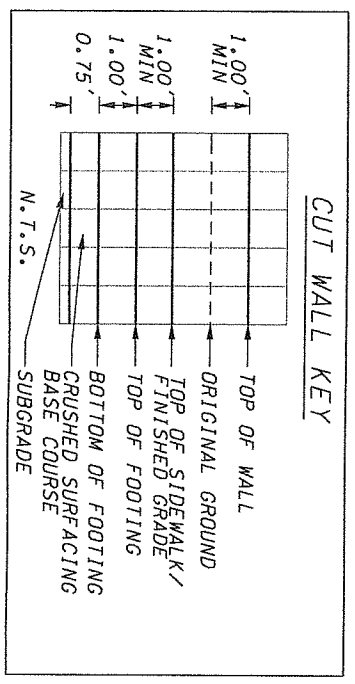

WALL NO. 7 *
SEE SHEETS PP6 & PP7 FOR PLAN VIEW

WALL STA 0+00.00
NE 117TH STA 36+90.00 (27.5' RT)
TOP OF WALL ELEV 74.00

WALL STA 0+24.00
TOP OF WALL ELEV 75.50

WALL STA 0+48.00
TOP OF WALL ELEV 78.0

WALL STA 0+96.00
TOP OF WALL ELEV 79.00

WALL STA 1+68.00
NE 117TH STA 38+58 (30.5' RT)
TOP OF WALL ELEV 80.50

WALL STA 2+16.00
TOP OF WALL ELEV 81.50

WALL STA 2+50.00
MATCH LINE, THIS SHEET

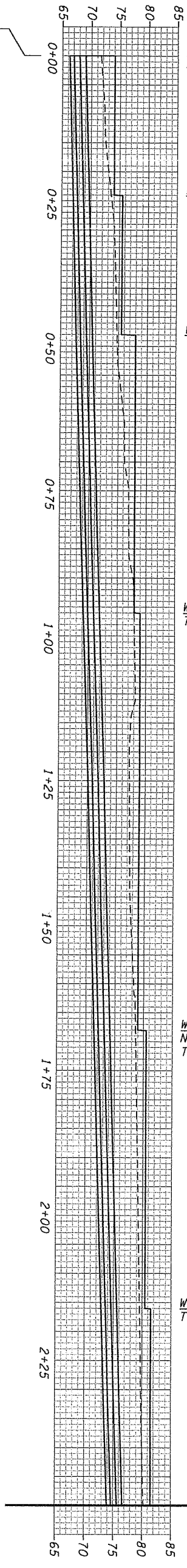

proud past, promising future
CLARK COUNTY
WASHINGTON

DESIGN & ENGINEERING DIVISION
DESIGN SECTION

NE 117th STREET
WALL PROFILE

DON B. OWINGS
STATE OF WASHINGTON
30306
REGISTERED PROFESSIONAL ENGINEER
EXPIRES SEPT. 25, 2004

CALL 48 HOURS BEFORE YOU DIG
1-800-553-4344
"It's the Law"
NORTHWEST UTILITIES NOTIFICATION CENTER

DESIGNED	ATH
DRAWN	CRB
CRP	320322
HOR.	1" = 10'
VERT.	1" = 10'
DATE	11/27/03
DWG:	WP7
SHEET	37 OF 78

MSE WALL NO. 8

SEE SHEETS PP6 & PP7 FOR PLAN VIEW

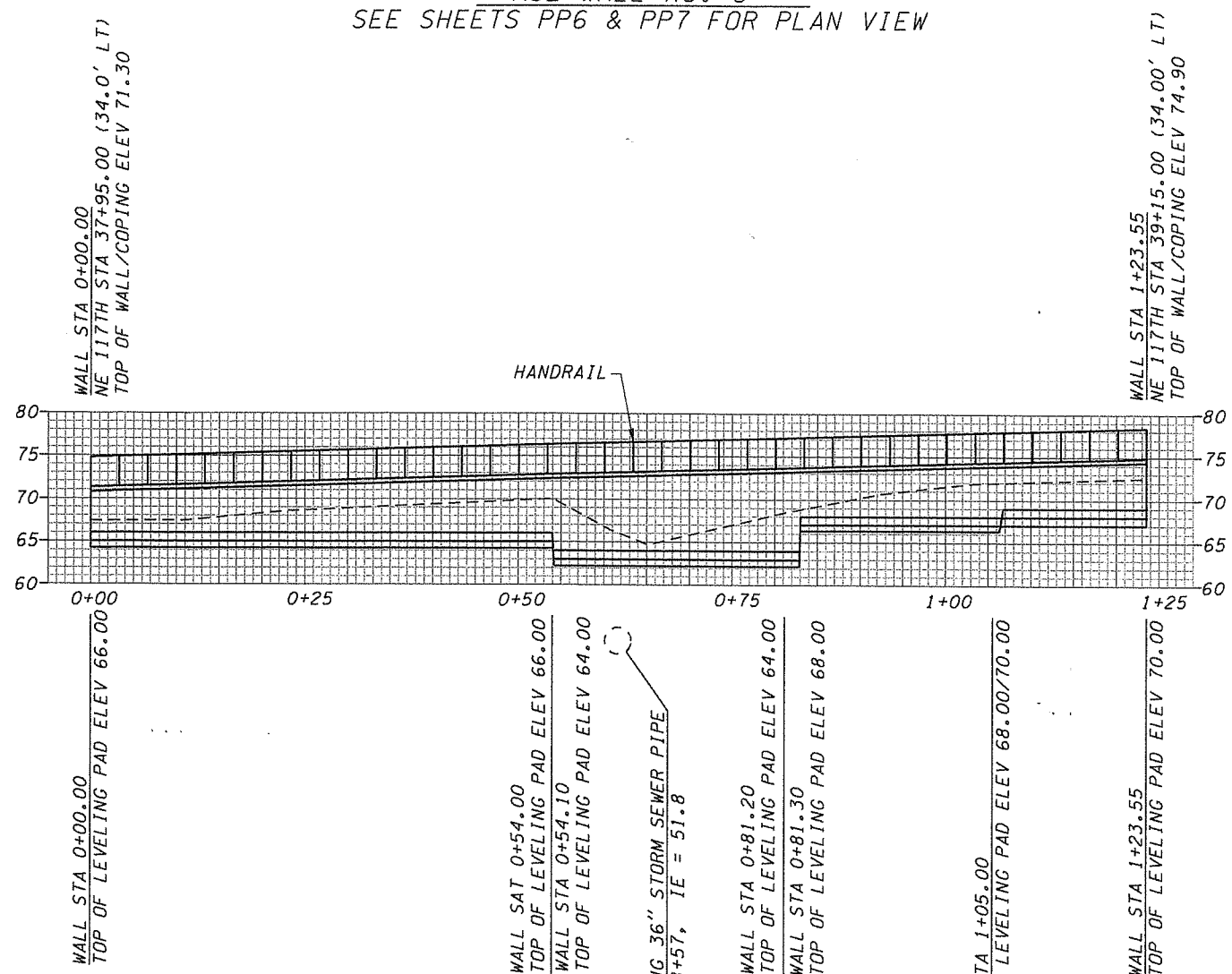

WALL PROFILE KEY

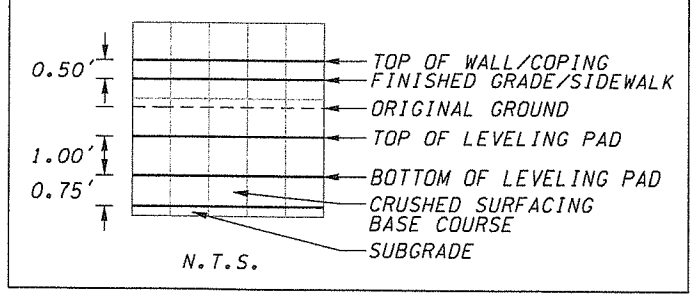

NOTES:

1. SEE SPECIAL PROVISION "STRUCTURAL EARTH WALL W/HANDRAIL"
2. SEE RETAINING DETAILS, WD1-A

DESIGNED	ATH
DRAWN	CRB
CRP	320322
HOR.	1" = 10'
VERT.	1" = 10'
DATE	11/27/03
DWG:	WP8
SHEET	38 OF 78

CALL 48 HOURS BEFORE YOU DIG
1-800-553-4344
"It's the Law"
NORTHWEST UTILITIES NOTIFICATION CENTER

DOUGLAS B. OWINGS
STATE OF WASHINGTON
REGISTERED PROFESSIONAL ENGINEER
EXPIRES SEPT. 23, 2004

DESIGN & ENGINEERING DIVISION
DESIGN SECTION

NE 117th STREET
WALL PROFILE

proud past, promising future
CLARK COUNTY
WASHINGTON

NOTES:

1. SEE SPECIAL PROVISION "STRUCTURAL EARTH WALL"
2. SEE RETAINING DETAILS, WD1-A

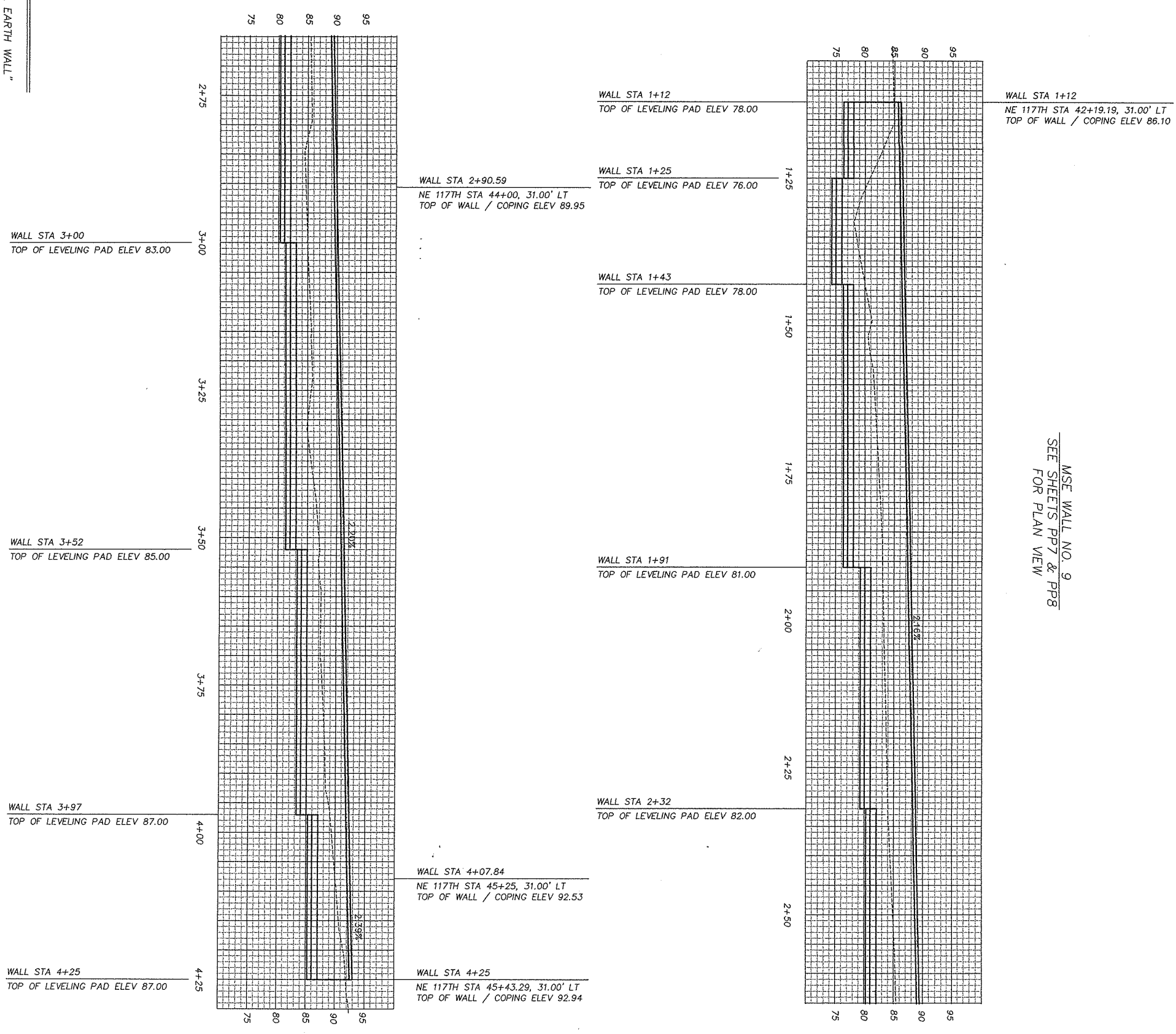

MSE WALL NO. 9
SEE SHEETS PP7 & PP8
FOR PLAN VIEW

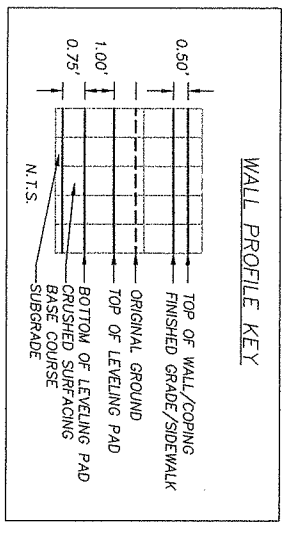

CRP NO. 320322

proud past, promising future
CLARK COUNTY
WASHINGTON

W&H PACIFIC
9755 SW Barnes Road
Suite 300
Portland, Oregon 97225
(503)626-0456
(503)626-0776 Fax
whpacific.com

WAYNE BAUER
STATE OF WASHINGTON
23240
REGISTERED PROFESSIONAL ENGINEER
EXPIRES 4/25/04

DESIGN & ENGINEERING DIVISION
DESIGN SECTION

NE 117TH STREET
WALL PROFILE

CALL 48 HOURS BEFORE YOU DIG
1-800-553-4344
"It's the Law"
CLARK COUNTY UTILITIES COORDINATING COUNCIL

DESIGNED	AJL
DRAWN	KLB
CRP	320322
HOR.	1"=10'
VERT.	1"=10'
DATE	03-26-04
DWG.	WP9
SHEET	39 OF 78

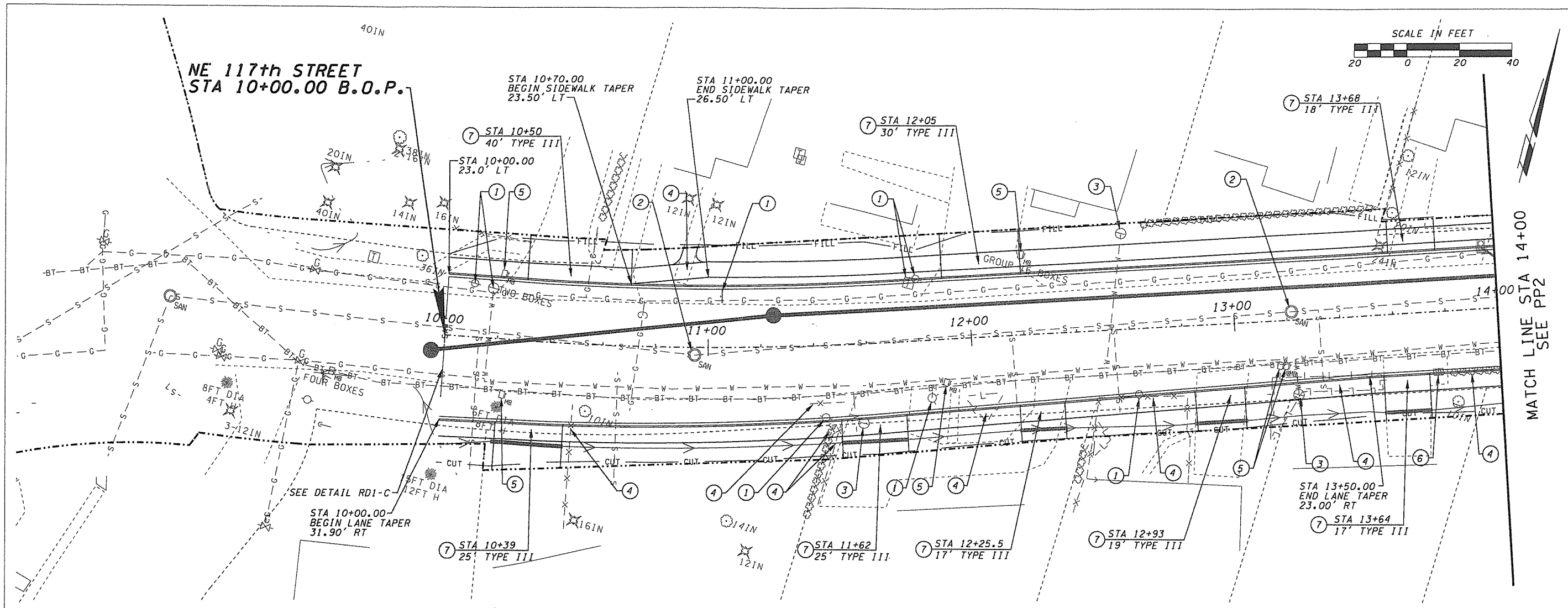

1. RELOCATE/REMOVE BY OTHERS
2. ADJUST MH RIM/CB GRATE TO FG, SEE DETAIL DD4-B
3. ADJUST VALVE COVER/METER BOX TO FG
4. RELOCATE/REMOVE TO R/W
5. RELOCATE MAILBOX BEHIND CURB, SEE DETAIL RD1-A
6. REMOVE EXISTING CB AND PLUG PIPE
7. SEE DRIVEWAY APPROACH DETAILS, SHEET DETAILS AD1-A,B,C
8. PROTECT TREES
9. PROVIDE NOTICE TO KAY HUST, SALMON CREEK WWTP OPERATIONS MANAGER, 360-397-2271, ONE WEEK PRIOR TO THE START OF ANY WORK WITHIN 10 FEET OF THE SALMON CREEK INTERCEPTOR

NOTES:

THE CONTRACTOR SHALL REMOVE ALL TREES WITHIN CUT/FILL LINES UNLESS OTHERWISE NOTED (TYPICAL).

THE CONTRACTOR SHALL REMOVE ALL EXISTING PAVEMENT WITHIN R/W (TYPICAL).

THE CONTRACTOR SHALL CHECK AND VERIFY ALL PROPERTY OWNER AGREEMENTS.

THE CONTRACTOR SHALL REMOVE EXISTING STRIPING AND PAVEMENT MARKINGS BY SHOT BLASTING, WHILE HOT TAPE AND THERMOPLASTIC SHALL BE REMOVED BY GRINDING. THE REMOVAL PROCESS SHALL CONFORM TO 2004 WASHINGTON STANDARD SPECIFICATIONS 8-22.3(6).

THE CONTRACTOR SHALL MAINTAIN EXISTING PERMANENT SIGNING IN ACCORDANCE WITH 2004 WASHINGTON STANDARD SPECIFICATIONS 1-07-.23(1).

THE CONTRACTOR SHALL PROVIDE TEMPORARY PAVEMENT MARKINGS IN ACCORDANCE WITH 2004 WASHINGTON STANDARD SPECIFICATIONS 8.23.

SEE SPECIAL PROVISIONS.

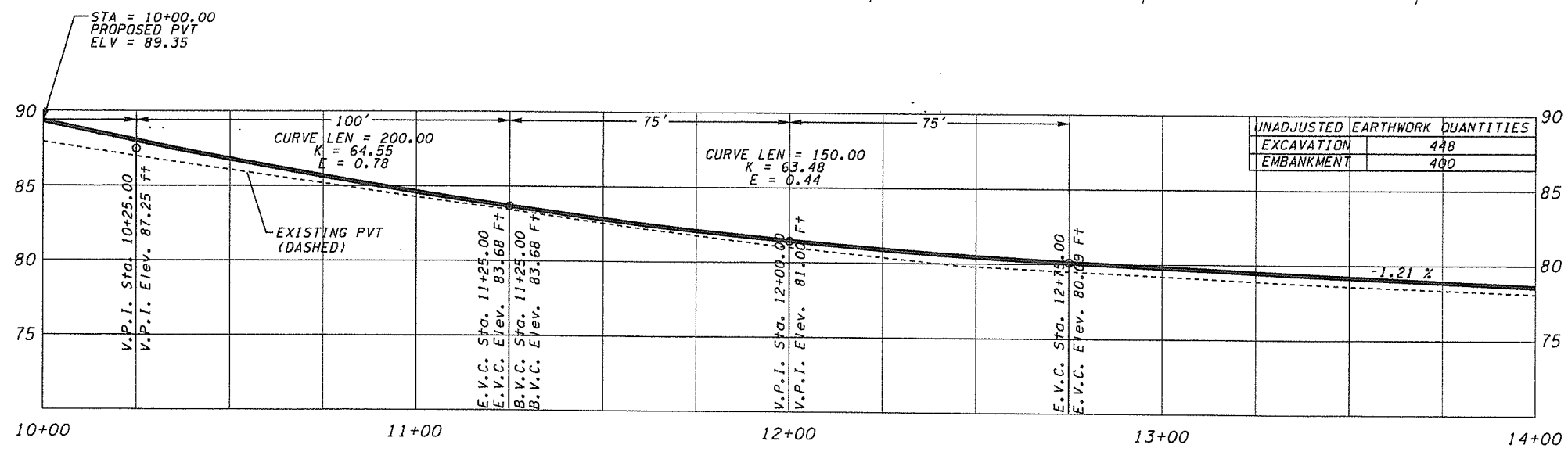

UNADJUSTED EARTHWORK QUANTITIES	
EXCAVATION	448
EMBANKMENT	400

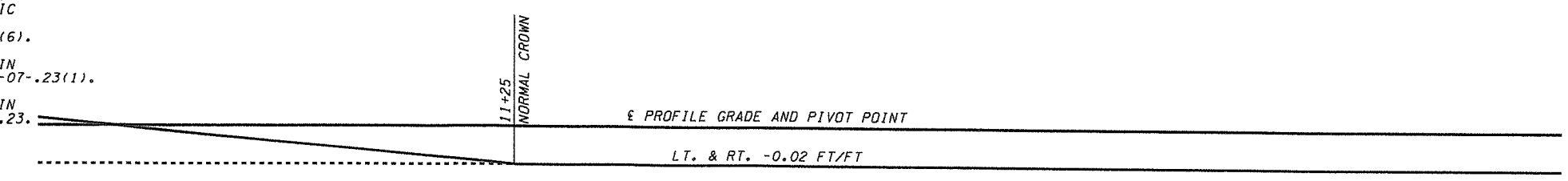

SUPER DIAGRAM

DESIGNED ATH/KAM
DRAWN CRB
CRP 320322
HOR. 1" = 20'
VERT. 1" = 5'
DATE 11/27/03
DWG: PP1
SHEET 40 OF 78

CALL 48 HOURS BEFORE YOU DIG
1-800-553-4344
"It's the Law"
NORTHWEST UTILITIES NOTIFICATION CENTER

STATE OF WASHINGTON
DON A. HOWTONS
REGISTERED PROFESSIONAL ENGINEER
EXPIRES 09/25/04

DESIGN & ENGINEERING DIVISION
DESIGN SECTION

NE 117th STREET
B.O.P. TO STA 14+00

proud past, promising future
CLARK COUNTY
WASHINGTON

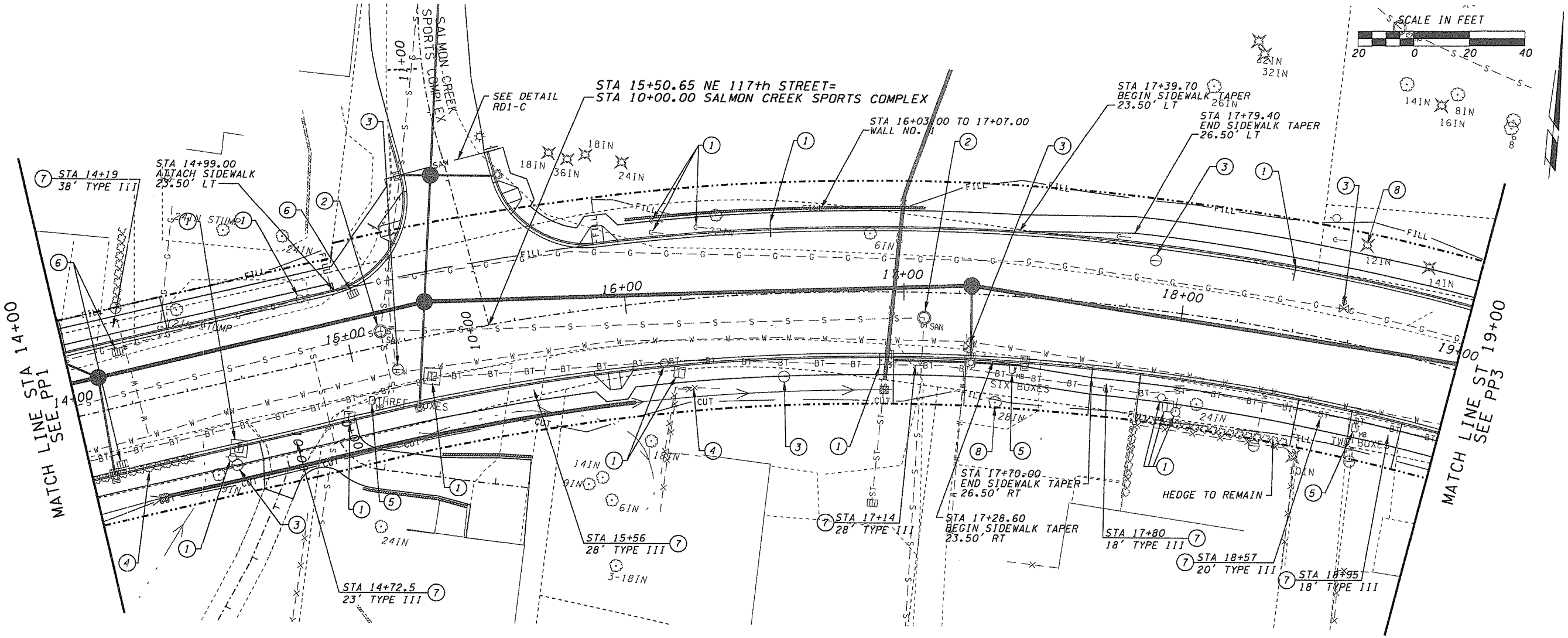

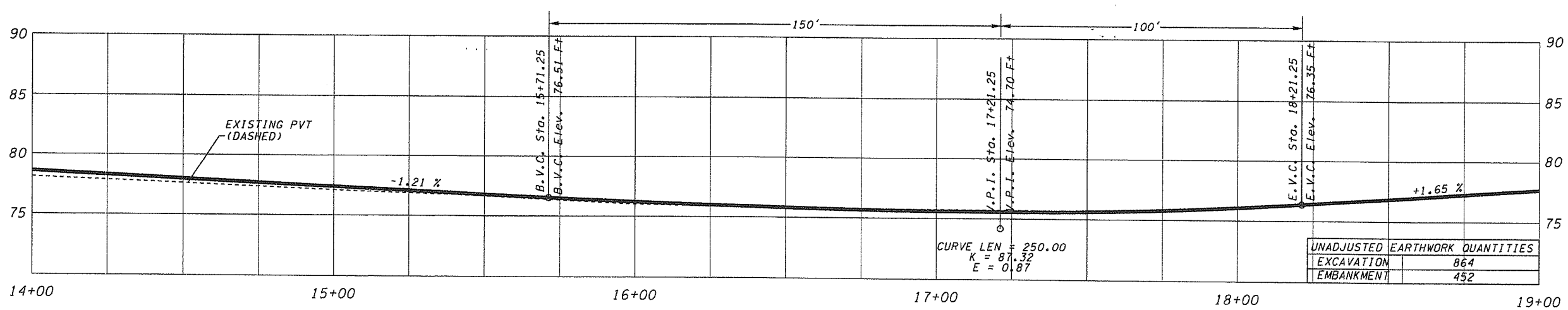

UNADJUSTED EARTHWORK QUANTITIES	
EXCAVATION	864
EMBANKMENT	452

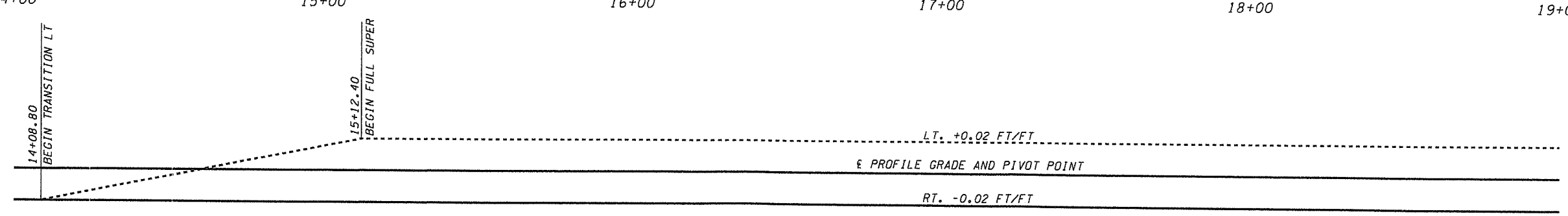

SUPER DIAGRAM

DESIGNED	ATH/KAM
DRAWN	CRB
CRP	320322
HOR.	1" = 20'
VERT.	1" = 5'
DATE	11/27/03
DWG:	PP2
SHEET	41 OF 78

CALL 48 HOURS BEFORE YOU DIG 1-800-553-4344 "It's the Law" NORTHWEST UTILITIES NOTIFICATION CENTER

DUANE A. ATKINS STATE OF WASHINGTON 22000 PROFESSIONAL ENGINEER EXPIRES 09/25/04

DESIGN & ENGINEERING DIVISION
DESIGN SECTION

NE 117th STREET
STA 14+00 TO STA 19+00

proud past, promising future

CLARK COUNTY WASHINGTON

PLOT2

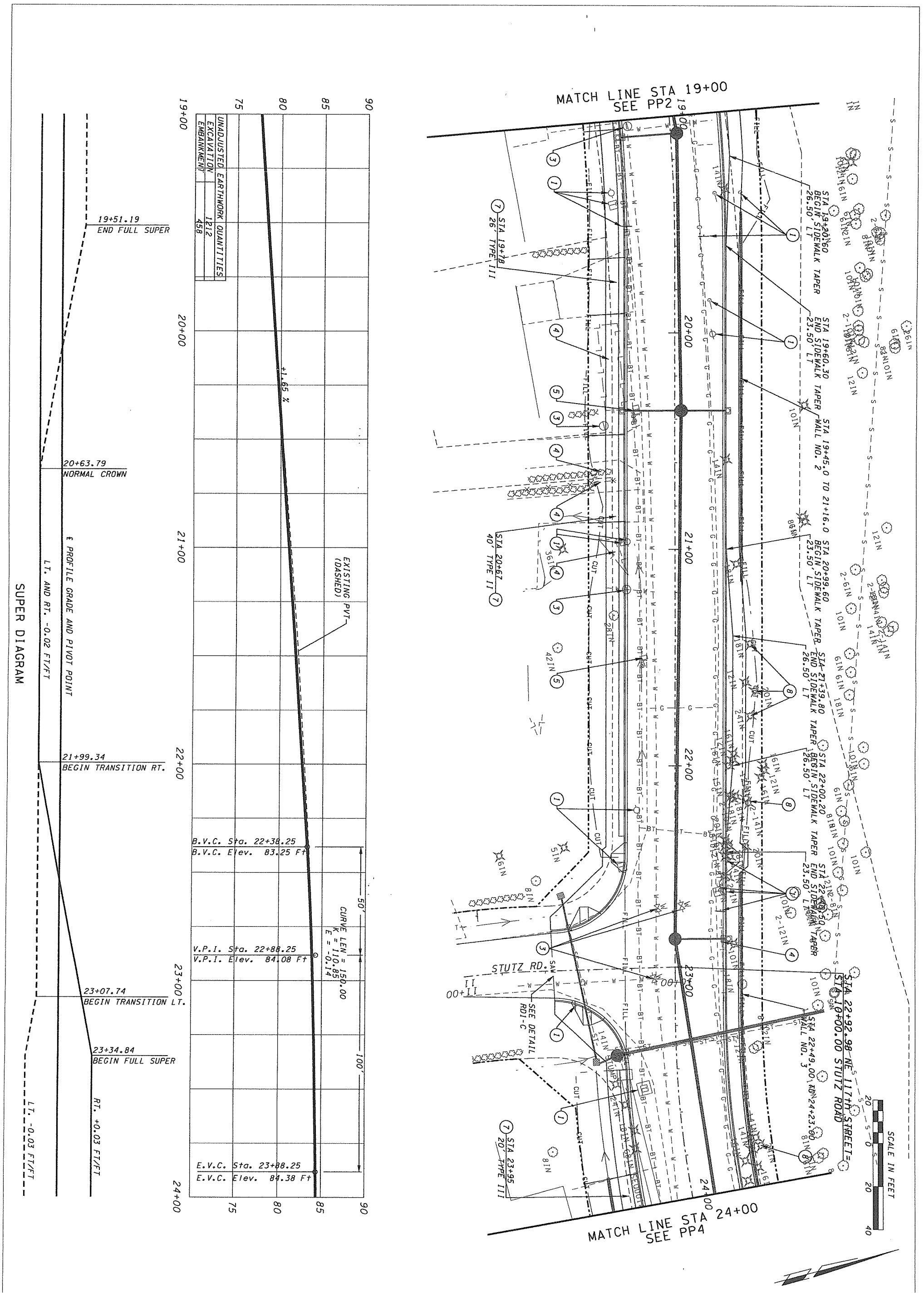

CLARK COUNTY
WASHINGTON
proud past, promising future

DESIGN & ENGINEERING DIVISION
DESIGN SECTION

NE 117th STREET
STA 19+00 TO STA 24+00

DON B. OWINGS
STATE OF WASHINGTON
30306
REGISTERED PROFESSIONAL ENGINEER
EXPIRES SEPT. 25, 2004

CALL 48 HOURS BEFORE YOU DIG
1-800-553-4344
"It's the Law"
NORTHWEST UTILITIES NOTIFICATION CENTER

DESIGNED	ATH/KAM
DRAWN	CRB
CRP	320322
HOR.	1" = 20'
VERT.	1" = 5'
DATE	11/27/03
DWG:	PP3
SHEET	42 OF 78

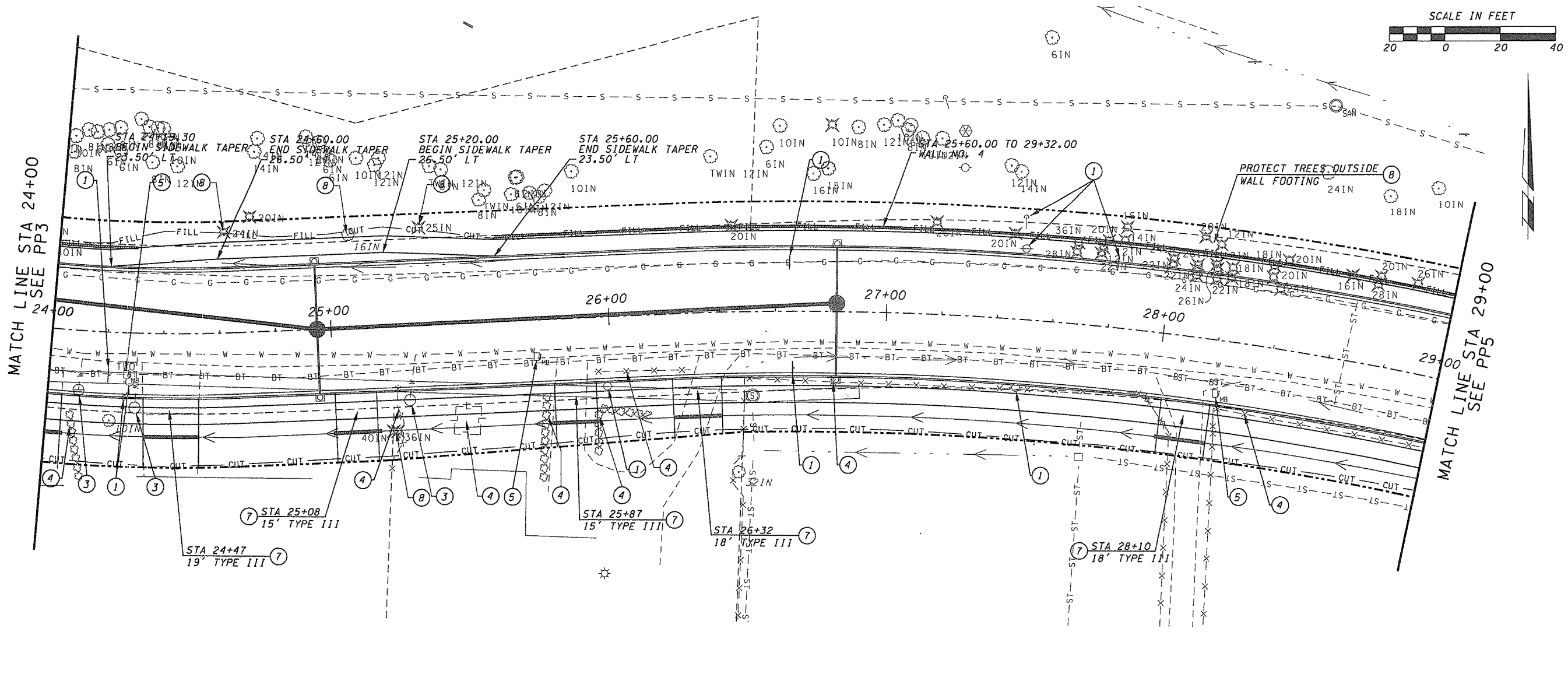

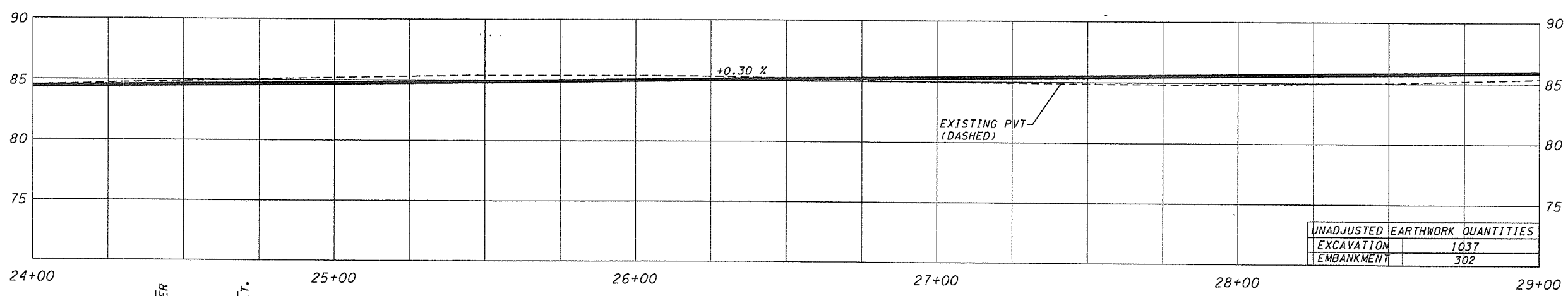

UNADJUSTED EARTHWORK QUANTITIES	
EXCAVATION	1037
EMBANKMENT	302

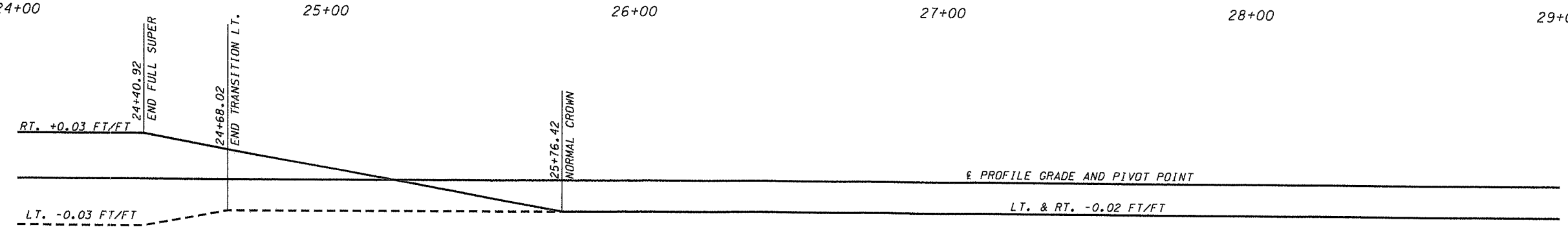

SUPER DIAGRAM

DESIGNED	ATH/KAM
DRAWN	CRB
CRP	320322
HOR.	1" = 20'
VERT.	1" = 5'
DATE	11/27/03
DWG:	PP4
SHEET	43 OF 78

CALL 48 HOURS BEFORE YOU DIG
1-800-553-4344
"It's the Law"
NORTHWEST UTILITIES NOTIFICATION CENTER

DION B. OWINGS
STATE OF WASHINGTON
EXPIRES SEPT. 25, 2004

DESIGN & ENGINEERING DIVISION
DESIGN SECTION

NE 117th STREET
STA 24+00 TO STA 29+00

proud past, promising future
CLARK COUNTY
WASHINGTON

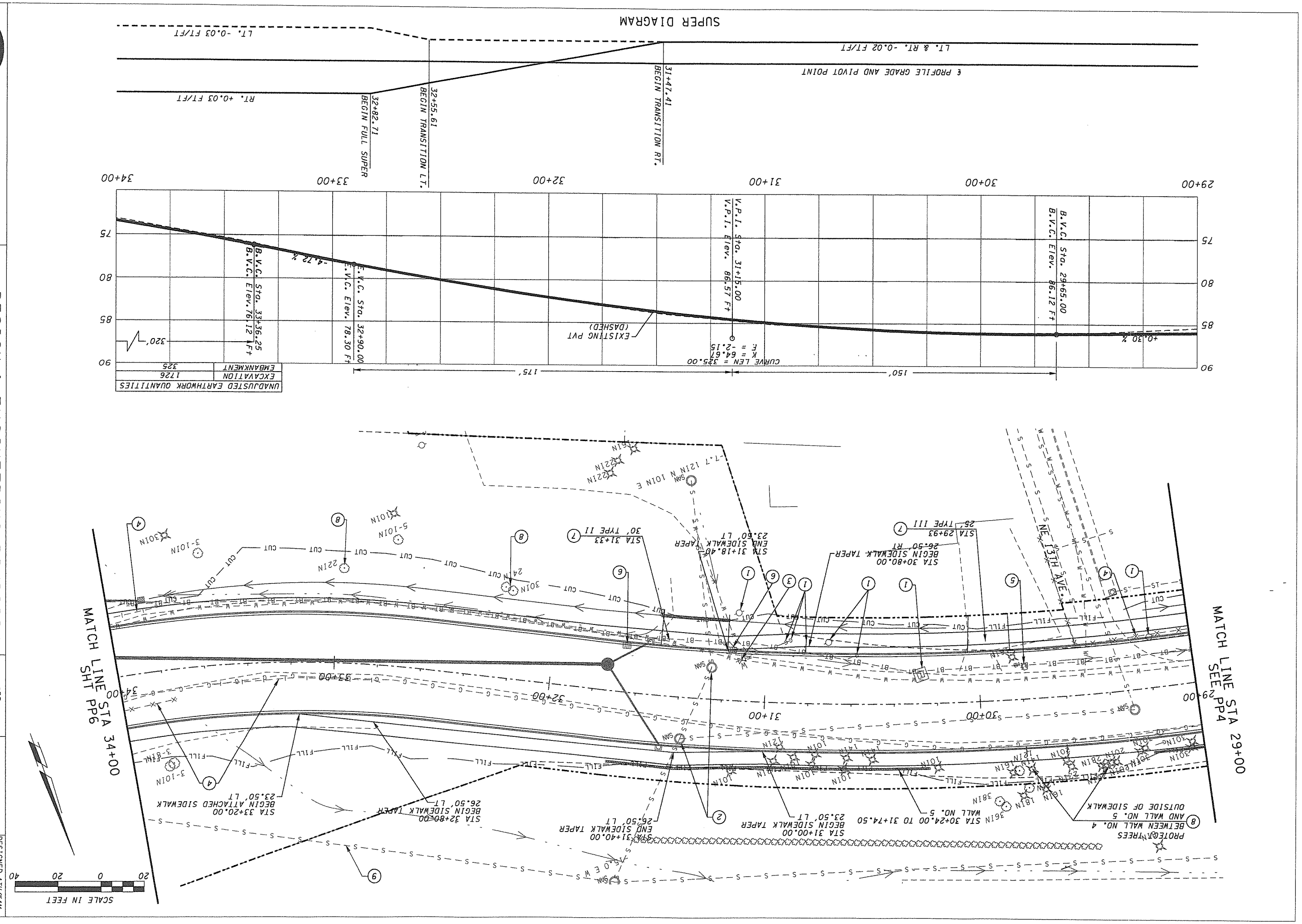

CLARK COUNTY WASHINGTON

proud past, promising future

DESIGN & ENGINEERING DIVISION
DESIGN SECTION

NE 117th STREET
STA 29+00 TO STA 34+00

DON B. OWINGS
STATE OF WASHINGTON
PROFESSIONAL ENGINEER
EXPIRES SEPT. 25, 2004

CALL 48 HOURS BEFORE YOU DIG
1-800-553-4344
"It's the Law"
NORTHWEST UTILITIES NOTIFICATION CENTER

DESIGNED	ATH/KAM
DRAWN	CRB
CRP	320322
HOR.	1" = 20'
VERT.	1" = 5'
DATE	11/27/03
DWG:	PP5
SHEET	44 OF 78

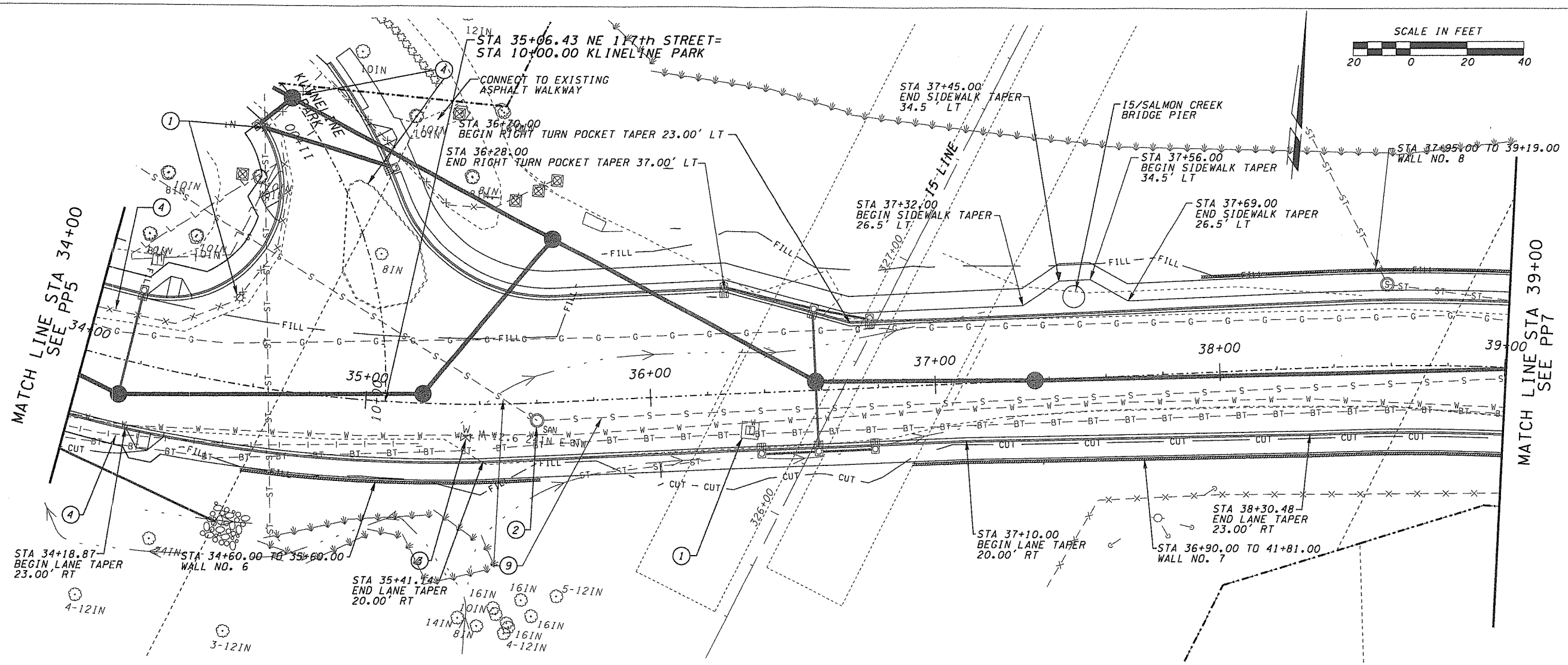

UNADJUSTED EARTHWORK QUANTITIES	
EXCAVATION	914
EMBANKMENT	468

SUPER DIAGRAM

DESIGNED	ATH/KAM
DRAWN	CRB
CRP	320322
HOR.	1" = 20'
VERT.	1" = 5'
DATE	11/27/03
DWG:	PP6
SHEET	45 OF 78

CALL 48 HOURS BEFORE YOU DIG 1-800-553-4344 "It's the Law" NORTHWEST UTILITIES NOTIFICATION CENTER

DON R. WYNGS STATE OF WASHINGTON 22000 REGISTERED PROFESSIONAL ENGINEER EXPIRES 09/26/04

DESIGN & ENGINEERING DIVISION
DESIGN SECTION

NE 117th STREET
STA 34+00 TO STA 39+00

proud past, promising future

CLARK COUNTY WASHINGTON

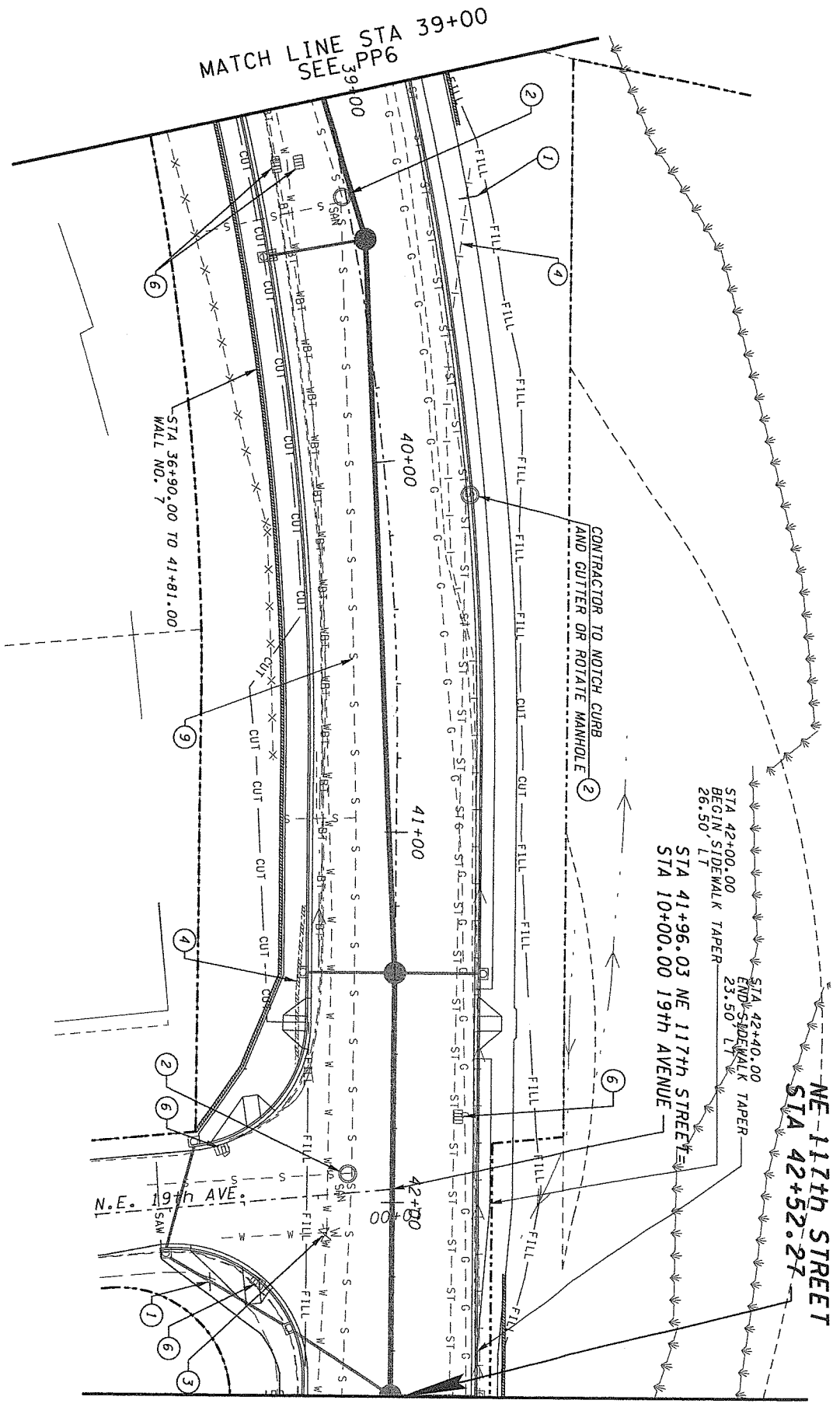

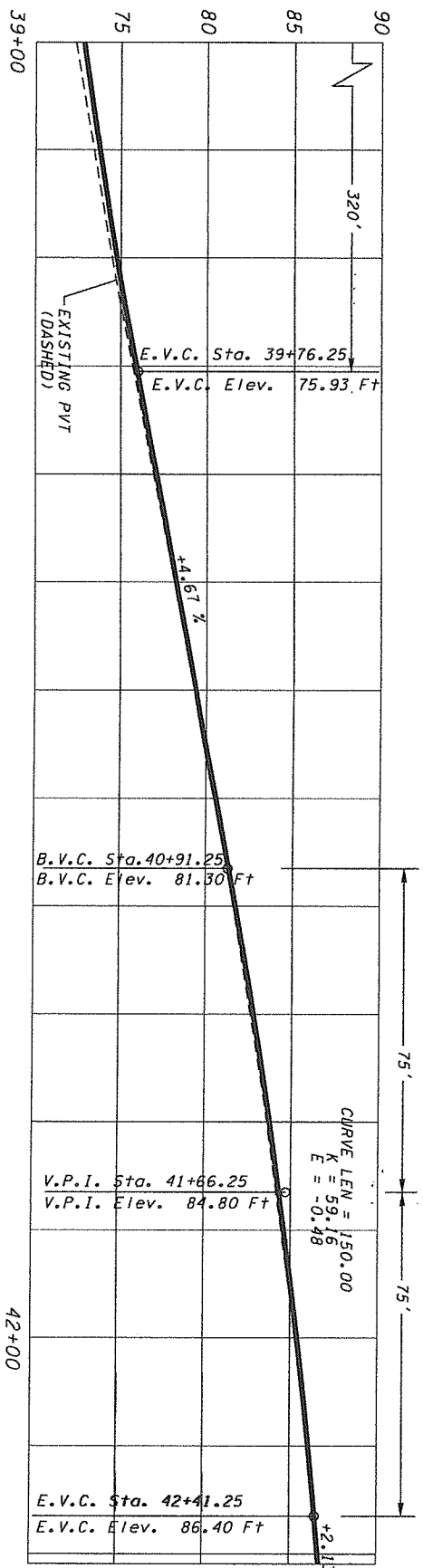

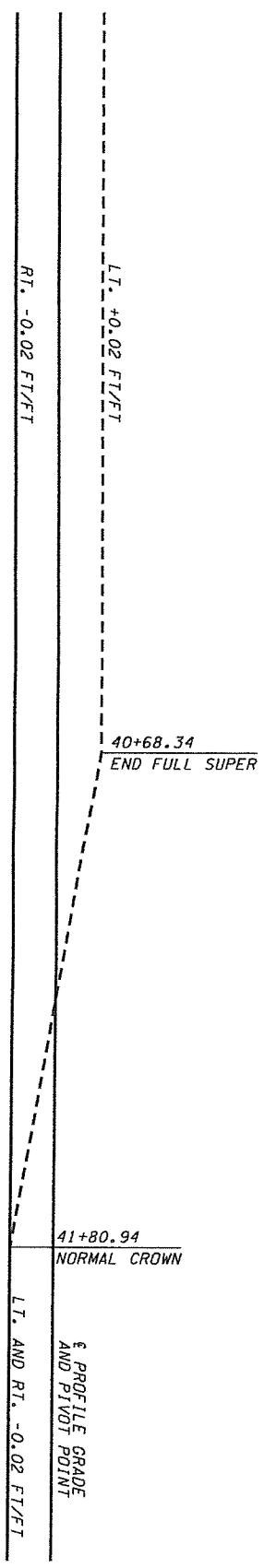

SUPER DIAGRAM

UNADJUSTED EARTHWORK QUANTITIES	
EXCAVATION	891
EMBANKMENT	101

SCALE IN FEET
20 0 20 40

proud past, promising future
CLARK COUNTY
WASHINGTON

DESIGN & ENGINEERING DIVISION
DESIGN SECTION

NE 117th STREET
STA 39+00 TO STA 42+52.27

DON B. OWINGS
STATE OF WASHINGTON
EXPIRES SEPT. 25, 2004

CALL 48 HOURS BEFORE YOU DIG
1-800-553-4344
"It's the Law"
NORTHWEST UTILITIES NOTIFICATION CENTER

DESIGNED	ATH/KAM
DRAWN	CRB
CRP	320322
HOR.	1" = 20'
VERT.	1" = 5'
DATE	11/27/03
DWG:	PP7
SHEET	46 OF 78

CRP NO. 320322

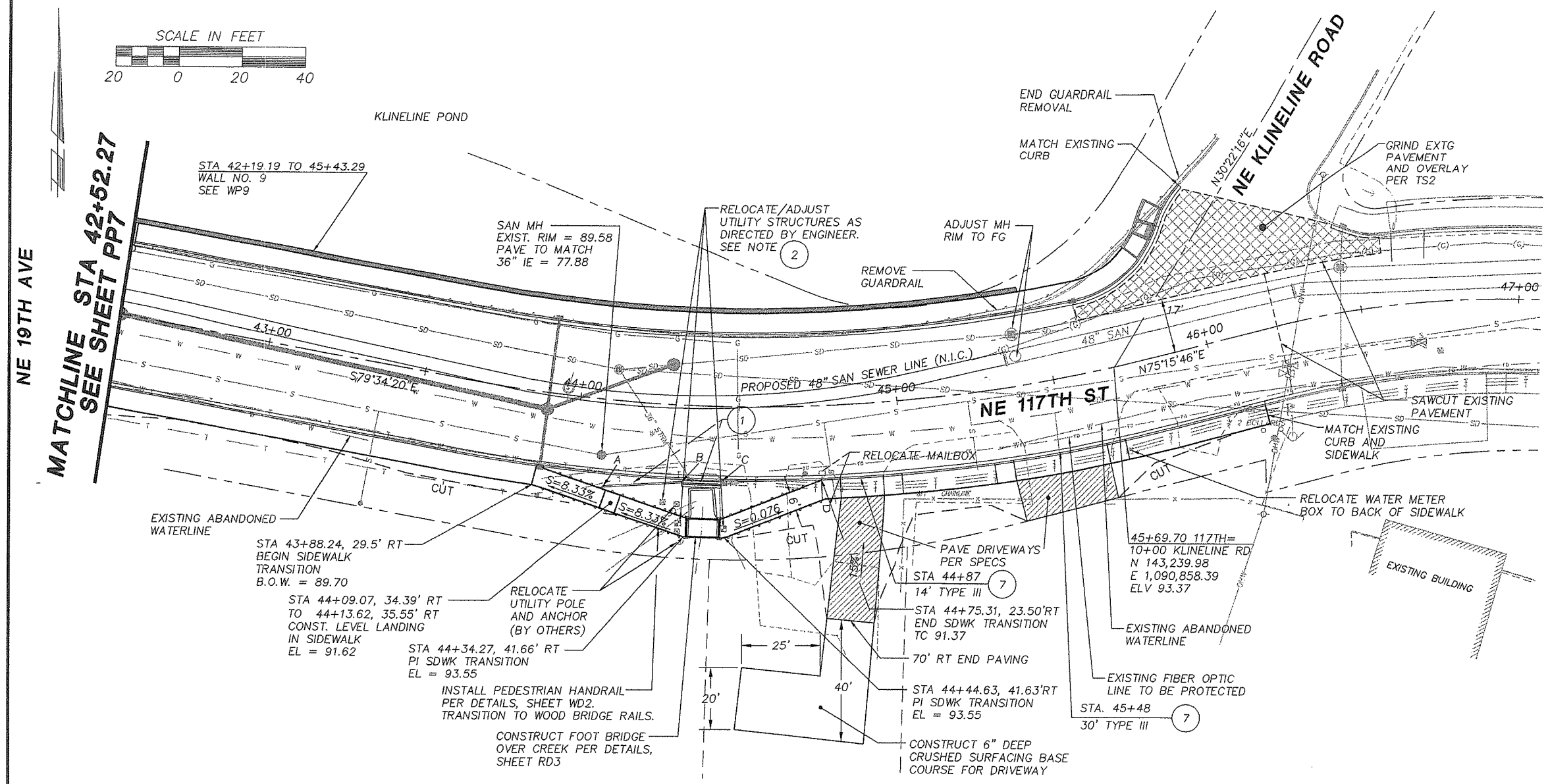

NOTES:

1. INSTALL 12.5 LF CONC. BARRIER WITH TYPE 3 ANCHORS AND 1 (ONE) EACH 25 FT LONG "NON-FLARED" TERMINAL AT 1:11 FLARE RATE. SEE LAYOUT TABLE BELOW. FIELD CONFIGURATION TO BE APPROVED BY CLARK CO. PRIOR TO INSTALLATION.
2. SEE SPECIAL PROVISIONS FOR BIN WALL CATHODIC PROTECTION SYSTEM MODIFICATIONS.
7. SEE DRIVEWAY APPROACH DETAILS, SHEET AD1.

CONCRETE BARRIER AND TERMINAL LAYOUT TABLE

POINT	STA	OFFSET	DESCRIPTION
A	44+09.53	27.21 RT	FACE OF RAIL
B	44+33.12	23.82 RT	TOE
C	44+44.78	23.82 RT	TOE

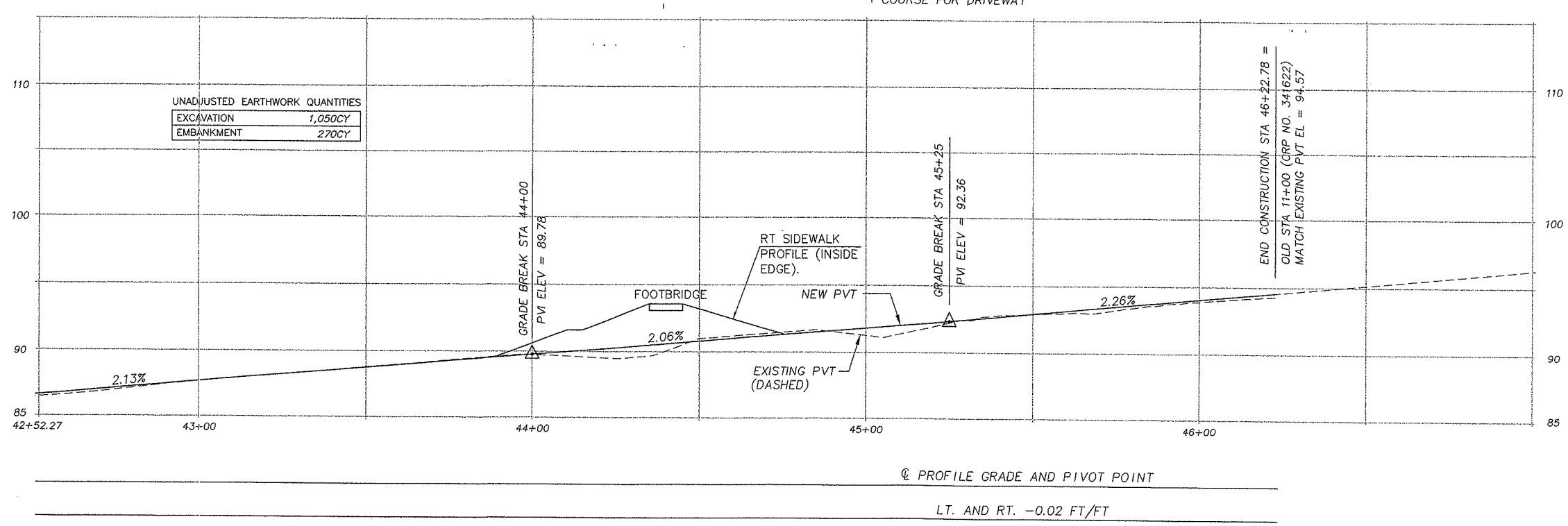

SUPER DIAGRAM

DESIGNED WAB/AJL
DRAWN KLB
CRP 320322
HOR. 1"=20'
VERT. 1"=5'
DATE 03-26-04
DWG. PP8
SHEET 47 OF 78

CALL 48 HOURS BEFORE YOU DIG 1-800-553-4344

"It's the Law" CLARK COUNTY UTILITIES COORDINATING COUNCIL

DESIGN & ENGINEERING DIVISION
DESIGN SECTION

NE 117TH STREET
ROADWAY PLAN & PROFILE
FROM STA 42+52.27 TO E.O.P.

WAYNE BAUER STATE OF WASHINGTON 23240 REGISTERED PROFESSIONAL ENGINEER
EXPIRES 4/25/04

W&H PACIFIC
9755 SW Barnes Road
Suite 300
Portland, Oregon 97225
(503)828-0466
(503)828-0775 Fax
whpacific.com

proud past, promising future
CLARK COUNTY WASHINGTON

4-0466-0801

T119PP00.DWG

GENERAL NOTE:
SEE SHEETS SA10 & SA11 FOR SANITARY SEWER

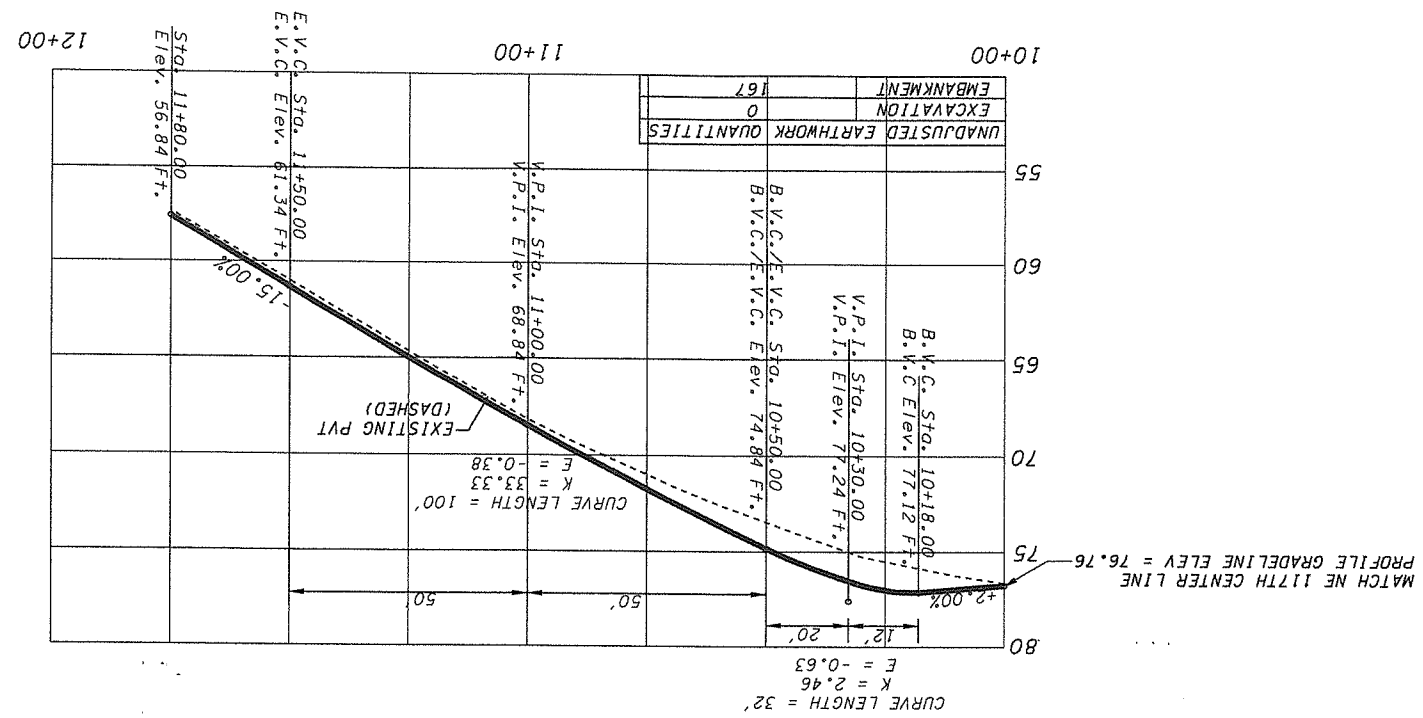

UNADJUSTED	EARTHWORK QUANTITIES
EXCAVATION	0
EMBANKMENT	167

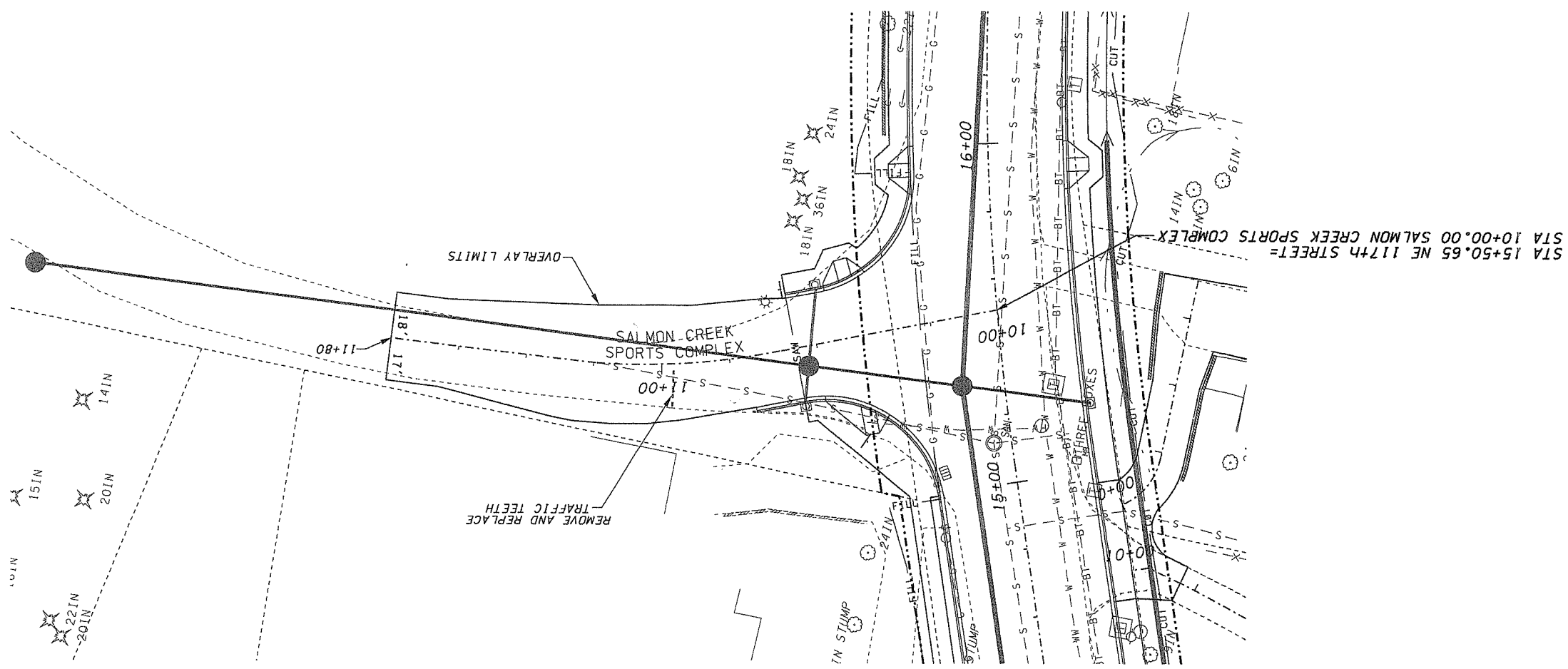

SCALE IN FEET
40 20 0 20

DESIGNED	ATH/KAM
DRAWN	CRB
CRP	320322
HOR.	1" = 20'
VERT.	1" = 5'
DATE	11/21/03
DWG:	PP9
SHEET	48 OF 78

CALL 48 HOURS BEFORE YOU DIG
1-800-553-4344
"It's the Law"
NORTHWEST UTILITIES NOTIFICATION CENTER

DON R. ONTING
STATE OF WASHINGTON
REGISTERED PROFESSIONAL ENGINEER
EXPIRES 10/25/04

CLARK COUNTY
WASHINGTON
proud past, promising future

DESIGN & ENGINEERING DIVISION
DESIGN SECTION

NE 117th STREET
SALMON CREEK SPORTS COMPLEX STA 10+00 TO STA 11+64

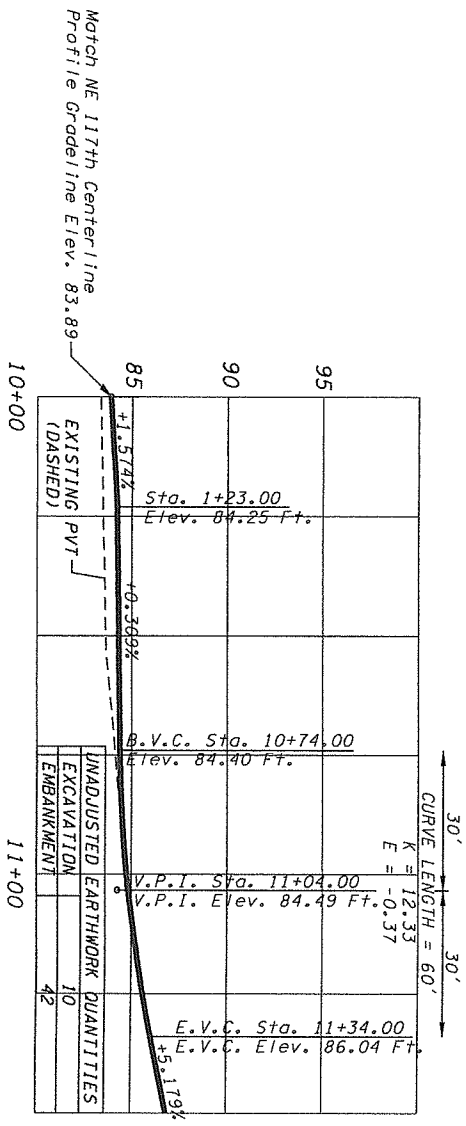

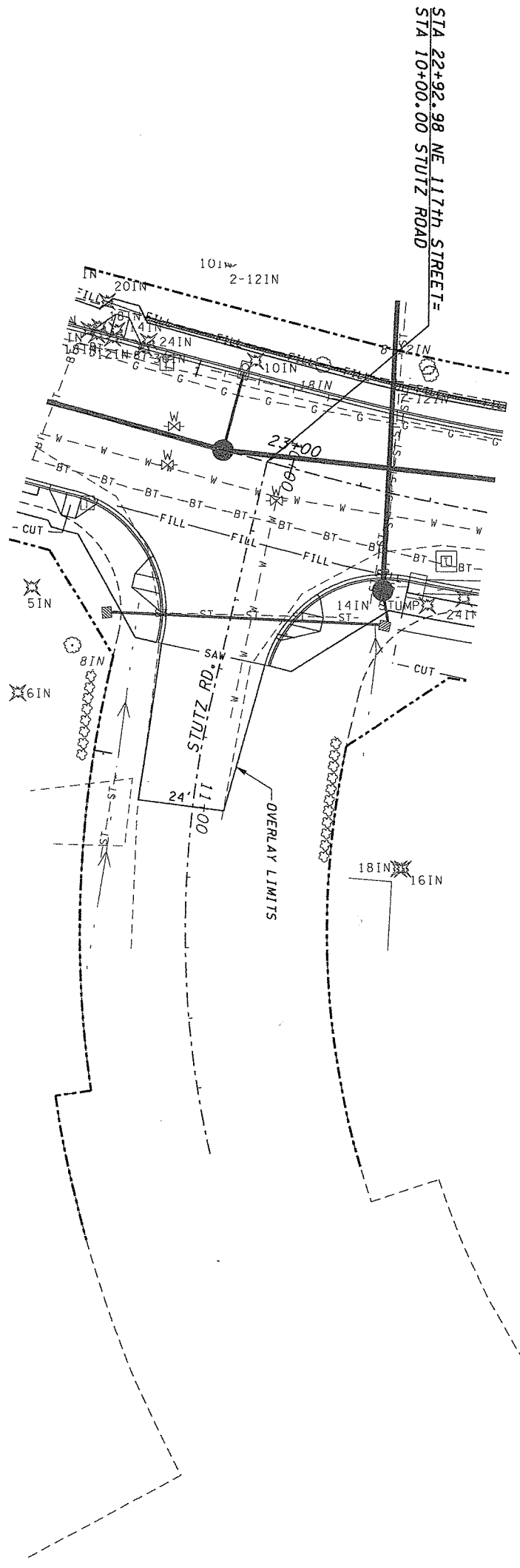

SCALE IN FEET
20 0 20 40

proud past, promising future CLARK COUNTY WASHINGTON	DESIGN & ENGINEERING DIVISION DESIGN SECTION NE 117th STREET STUTZ ROAD STA 10+00 TO STA 11+00	DON B. OWINGS STATE OF WASHINGTON 20336 PROFESSIONAL ENGINEER EXPIRES SEPT. 25, 2004

CALL 48 HOURS BEFORE YOU DIG
1-800-553-4344
"It's the Law"
NORTHWEST UTILITIES NOTIFICATION CENTER

DESIGNED	ATH/KAM
DRAWN	CRB
CRP	320322
HOR.	1" = 20'
VERT.	1" = 5'
DATE	11/27/03
DWG:	PP10
SHEET	49 OF 78

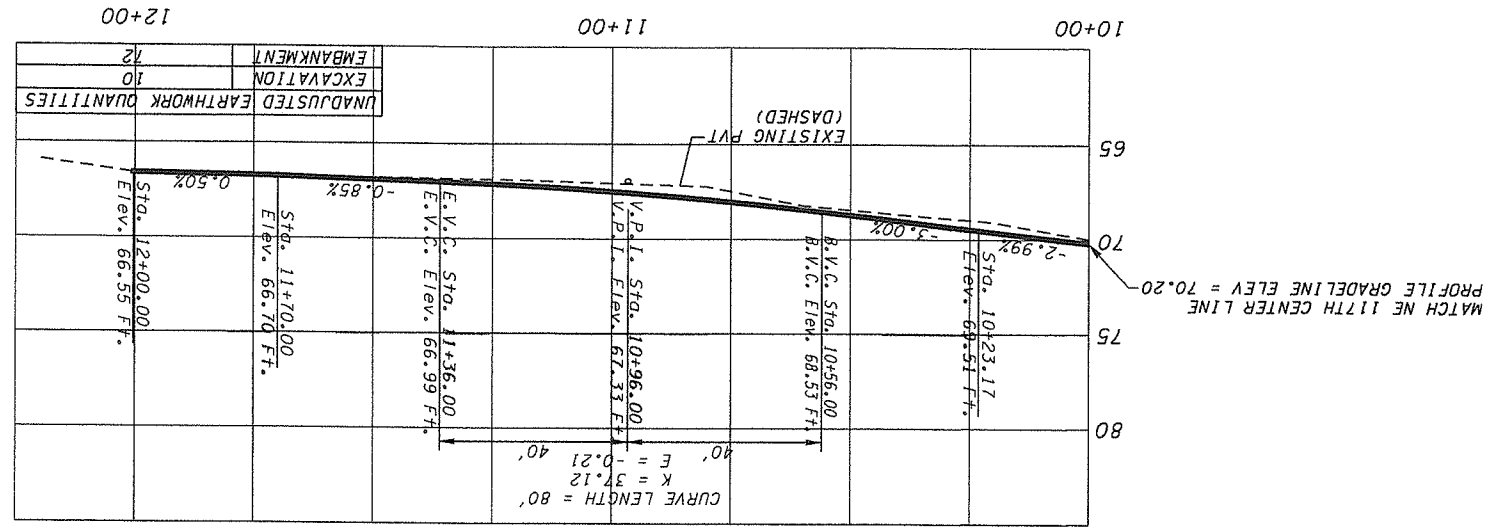

UNADJUSTED	EARTHWORK QUANTITIES
EXCAVATION	10
EMBANKMENT	72

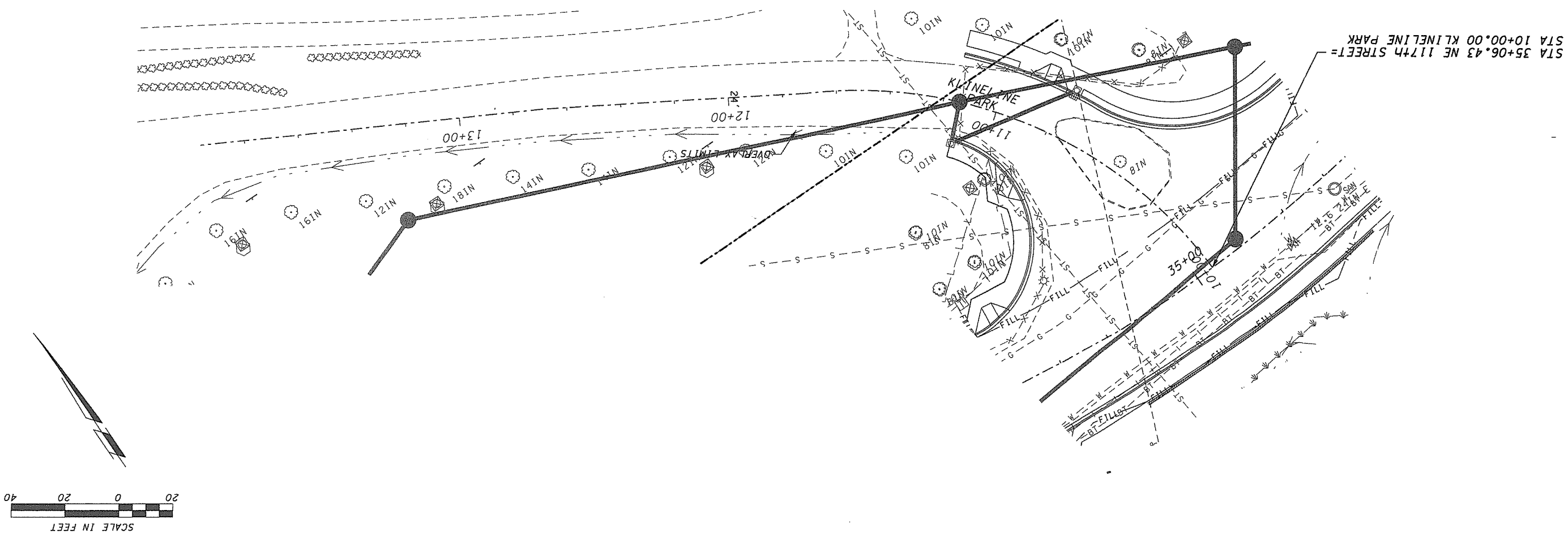

CLARK COUNTY WASHINGTON

proud past, promising future

DESIGN & ENGINEERING DIVISION
DESIGN SECTION

NE 117th STREET
KLINELINE PARK STA 10+00 TO STA 12+00

DON B. OWINGS
STATE OF WASHINGTON
EXPIRES SEPT. 25, 2004

CALL 48 HOURS BEFORE YOU DIG
1-800-553-4344
"It's the Law"
NORTHWEST UTILITIES NOTIFICATION CENTER

DESIGNED	ATH/KAM
DRAWN	CRB
CRP	320322
HOR.	1" = 20'
VERT.	1" = 5'
DATE	11/27/03
DWG:	PP11
SHEET	50 OF 78

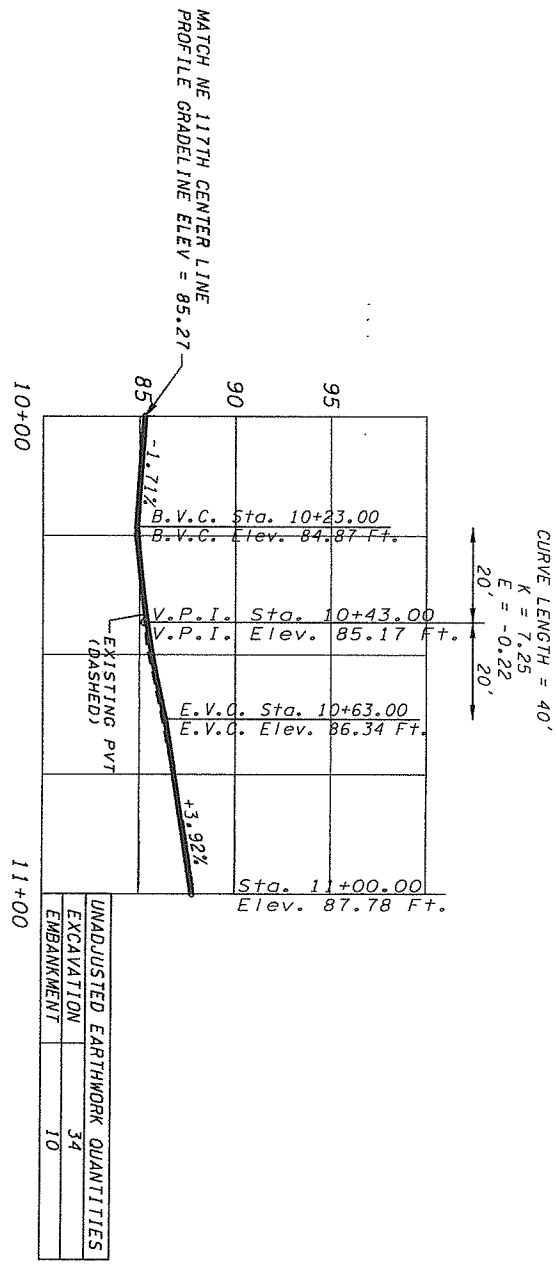

UNADJUSTED EARTHWORK QUANTITIES	
EXCAVATION	34
EMBANKMENT	10

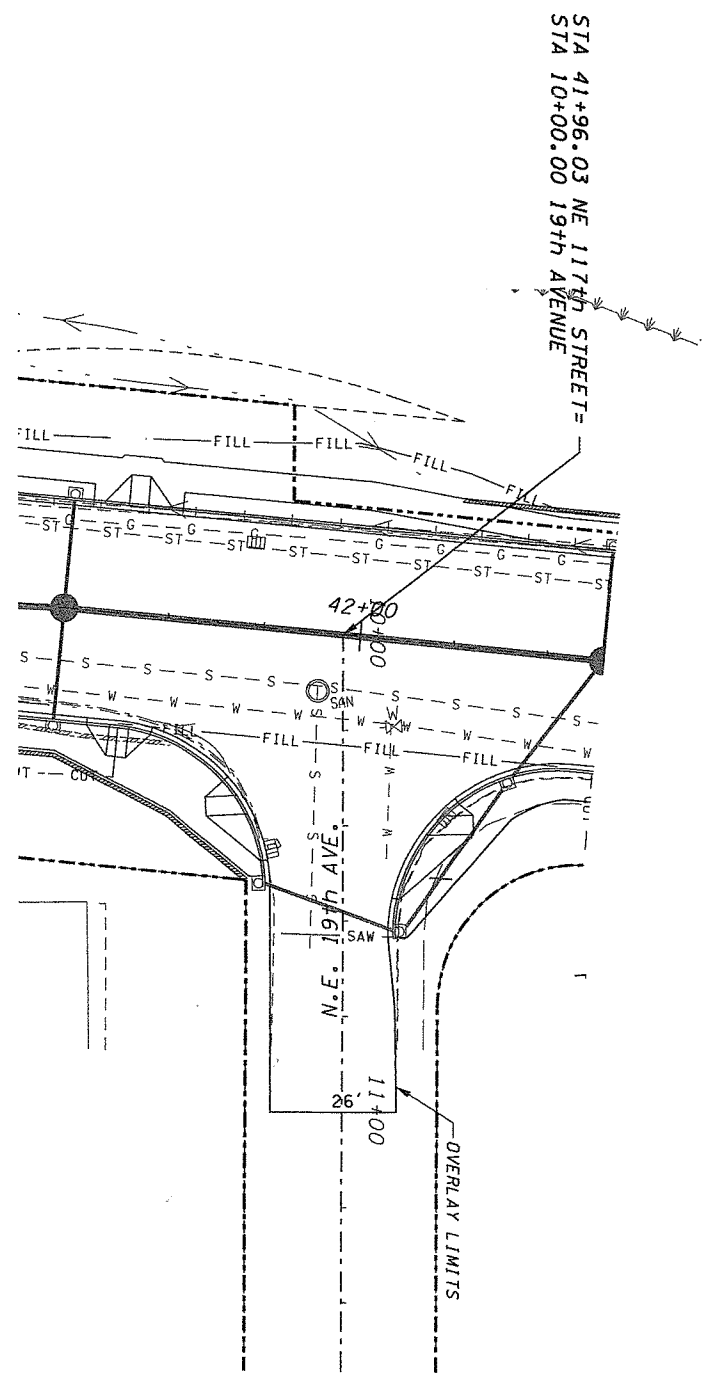

CLARK COUNTY
WASHINGTON
proud past, promising future

DESIGN & ENGINEERING DIVISION
DESIGN SECTION

NE 117th STREET
19th AVENUE STA 10+00 TO STA 11+00

DON B. OWINGS
STATE OF WASHINGTON
30305
REGISTERED PROFESSIONAL ENGINEER
EXPIRES SEPT. 25, 2004

CALL 48 HOURS BEFORE YOU DIG
1-800-553-4344
"It's the Law"
NORTHWEST UTILITIES NOTIFICATION CENTER

DESIGNED	ATH/KAM
DRAWN	CRB
CRP	320322
HOR.	1" = 20'
VERT.	1" = 5'
DATE	11/27/03
DWG:	PP12
SHEET	51 OF 78

NUMBER	PC STA	PT STA	DELTA ANGLE	TANGENT	RADIUS	ARC LENGTH	CHORD LENGTH
D1	0+00.00	0+18.43	55°13'05.39"	10.00	19.12	18.43'	17.72'
D2	PR 10+08.06/5.38' LT	DR 0+07.11/7.0' RT	91°11'08.91"	10.21	10	15.91'	14.29'

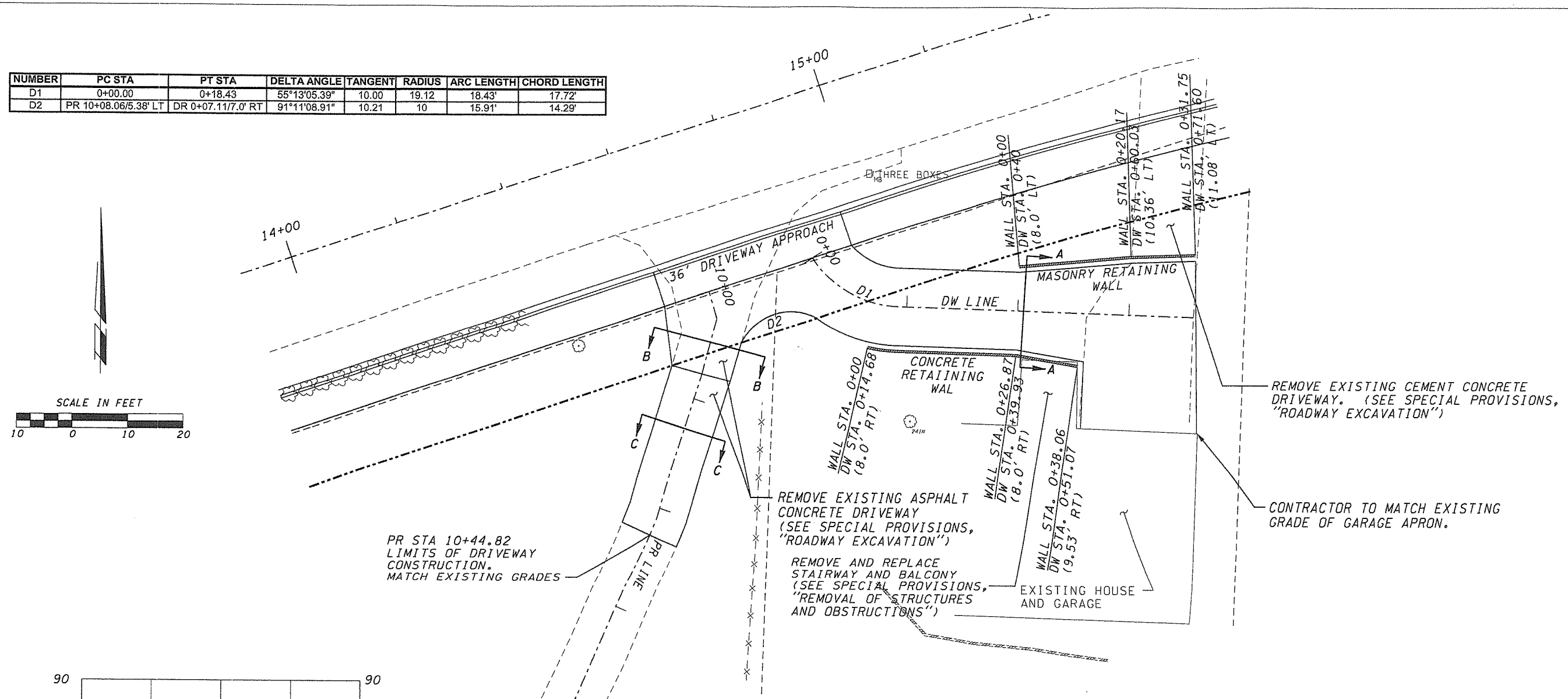

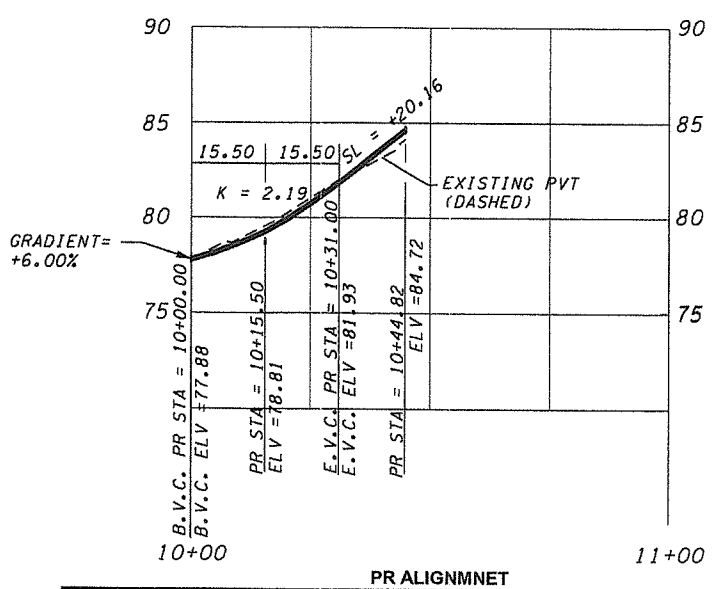

PR ALIGNMNET

LINE	STA	NE117 STA/OFFSET	BEARING	DISTANCE	ELEV
PR	10+00.00	14+69.41/29.50' RT			77.88
			S 16°44'59.28" E	4.96'	
	10+04.96				78.18
			S 14°54'00.47" W	10.62'	
	10+15.58				78.81
			S 17°46'03.78" W	26.25'	
	10+41.82				84.10
			S 23°41'34.61" W	3.00'	
	10+44.82				84.72

PR PROFILE

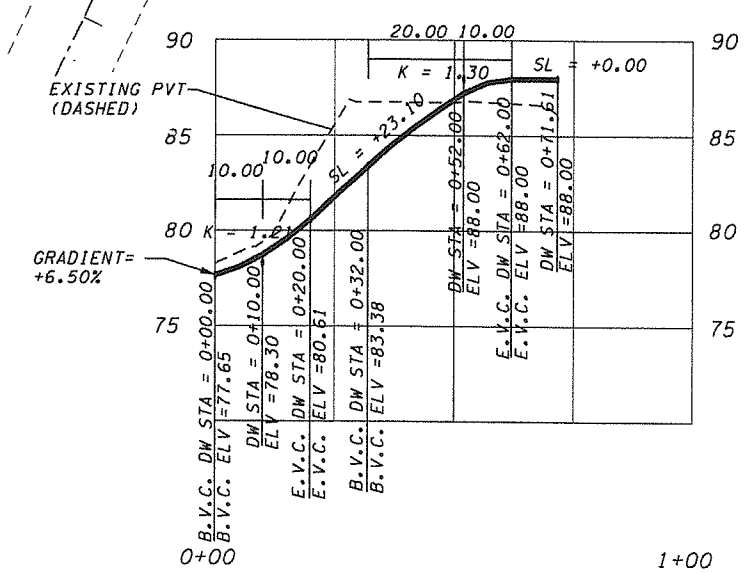

DR ALIGNMENT

LINE	STA	NE117 STA/OFFSET	BEARING	DISTANCE	ELEV
DR	0+00.00	14+89.00/29.50' RT			77.65
			D1	18.43'	
	0+18.43				80.25
			S 88°13'05.39" E	53.18'	
	0+71.61				

DW PROFILE

NOTES:

1. SEE SHEET PP2 FOR UTILITY LOCATIONS.
2. CONTRACTOR TO VERIFY OTHER PROPERTY AGREEMENTS.
3. SEE SHEET DW2 FOR WALL PROFILES.
4. SEE SHEET DW2 FOR SECTIONS A-A, B-B, AND C-C.

DESIGNED ATH/KAM
DRAWN CRB
CRP 320322
HOR. 1" = 20'
VERT. 1" = 5'
DATE 01/28/2004
DWG: DW1
SHEET 52 OF 78

CALL 48 HOURS BEFORE YOU DIG 1-800-553-4344 "It's the Law" NORTHWEST UTILITIES NOTIFICATION CENTER

DONALD B. DWINGS STATE OF WASHINGTON 33303 REGISTERED PROFESSIONAL ENGINEER
EXPIRES SEPT. 25, 2004

DESIGN & ENGINEERING DIVISION
DESIGN SECTION

NE 117th STREET
DRIVEWAY PLAN AND PROFILE

proud past, promising future
CLARK COUNTY WASHINGTON

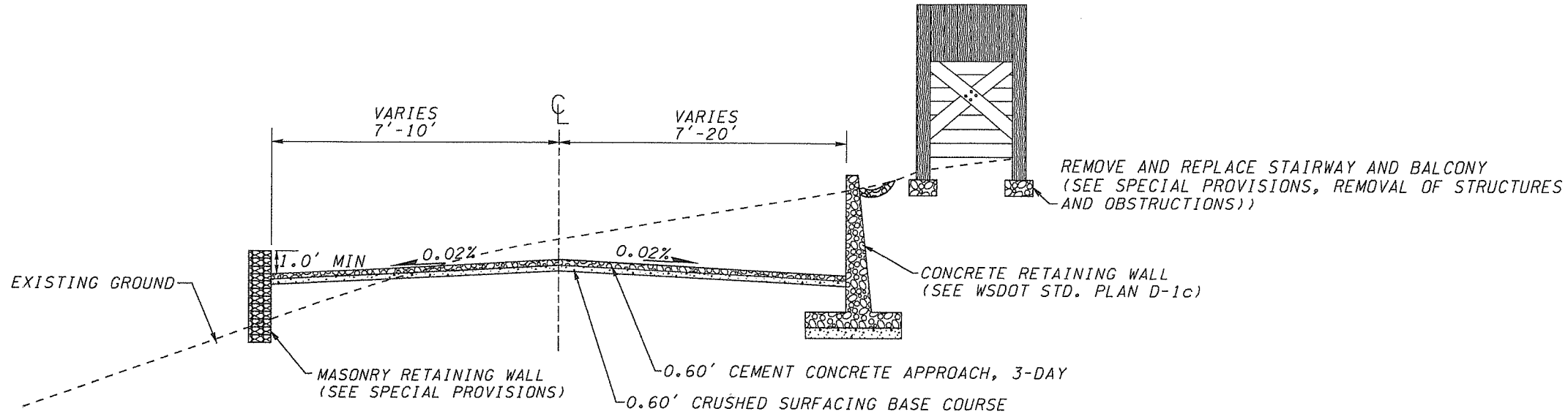

SECTION A-A

DW STA. 0+00.00 TO 0+71.61

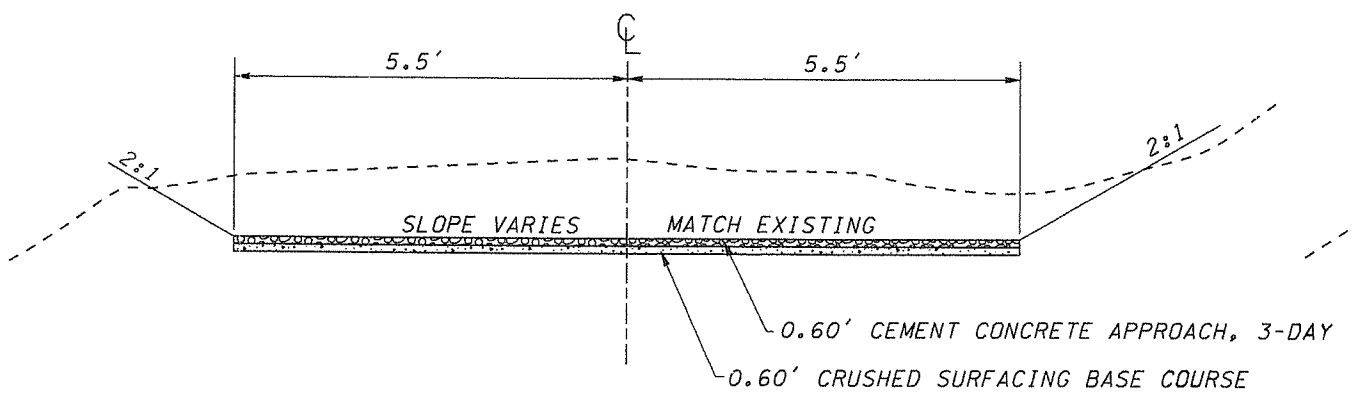

SECTION B-B

PR STA. 10+00.00 TO 10+15.50

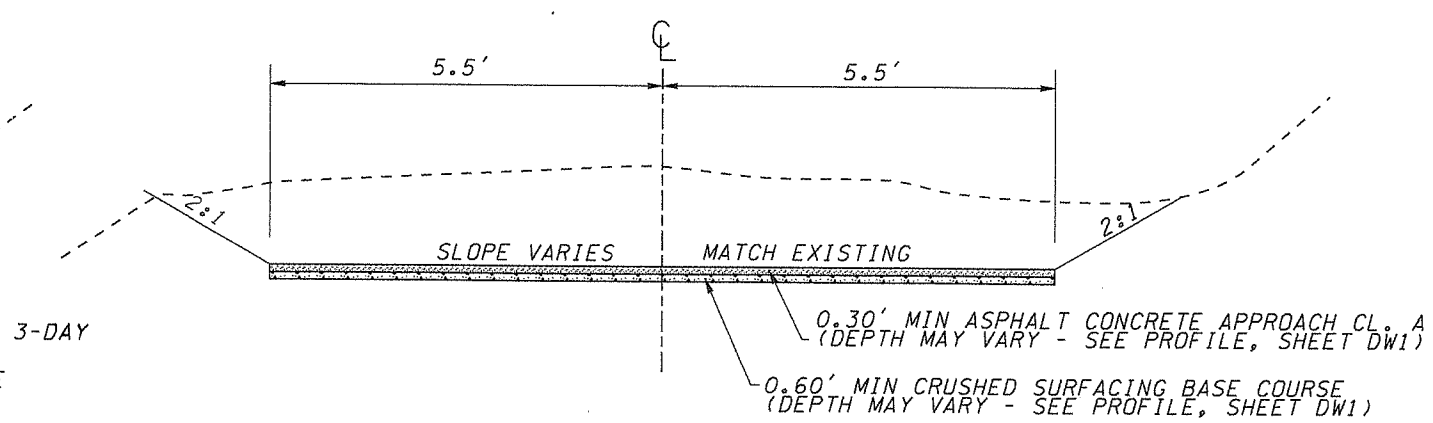

SECTION C-C

PR STA. 10+15.50 TO 10+44.82

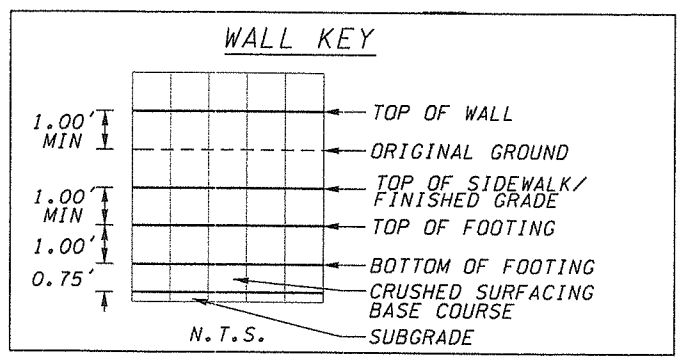

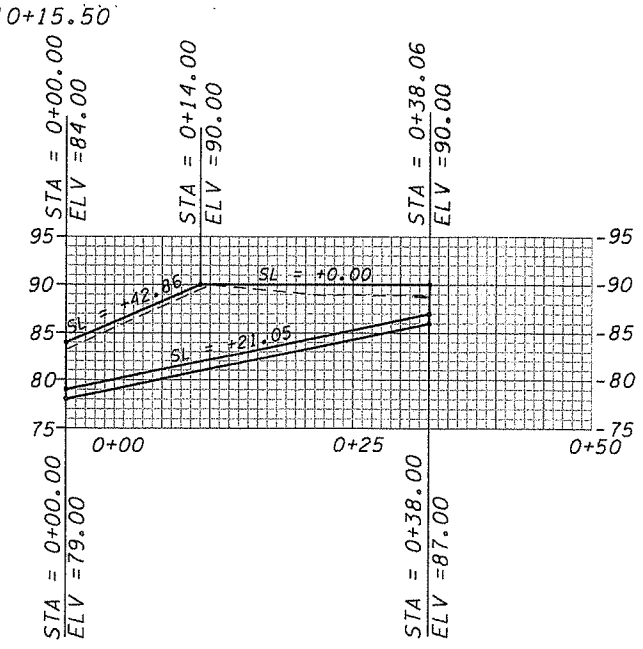

CEMENT CONCRETE WALL PROFILE

N.T.S.

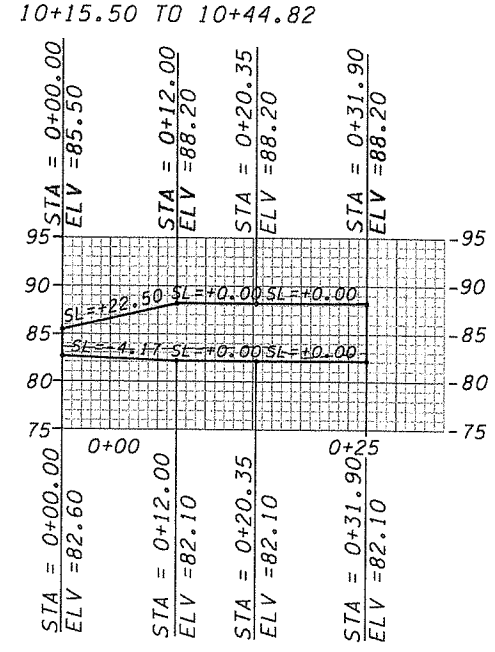

MASONRY WALL PROFILE

N.T.S.

DESIGN & ENGINEERING DIVISION
DESIGN SECTION

NE 117th STREET
DRIVEWAY SECTIONS AND WALL PROFILES

CALL 48 HOURS BEFORE YOU DIG
1-800-553-4344
"It's the Law"
NORTHWEST UTILITIES NOTIFICATION CENTER

DON B. OWINGS
STATE OF WASHINGTON
EXPIRES SEPT. 25, 2004

DESIGNED	ATH/KAM
DRAWN	CRB
CRP	320322
HOR.	1" = 20'
VERT.	1" = 5'
DATE	01/28/2004
DWG:	DW2
SHEET	53 OF 78

proud past, promising future

CLARK COUNTY
WASHINGTON

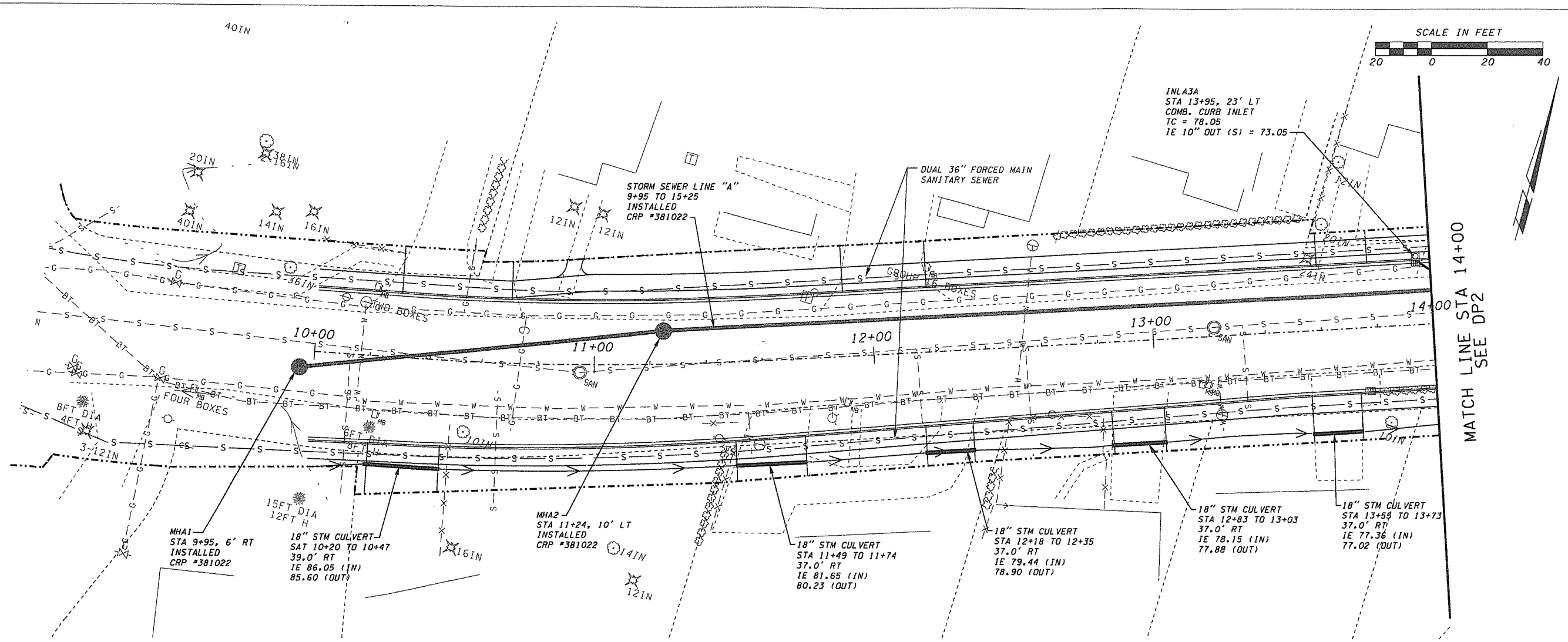

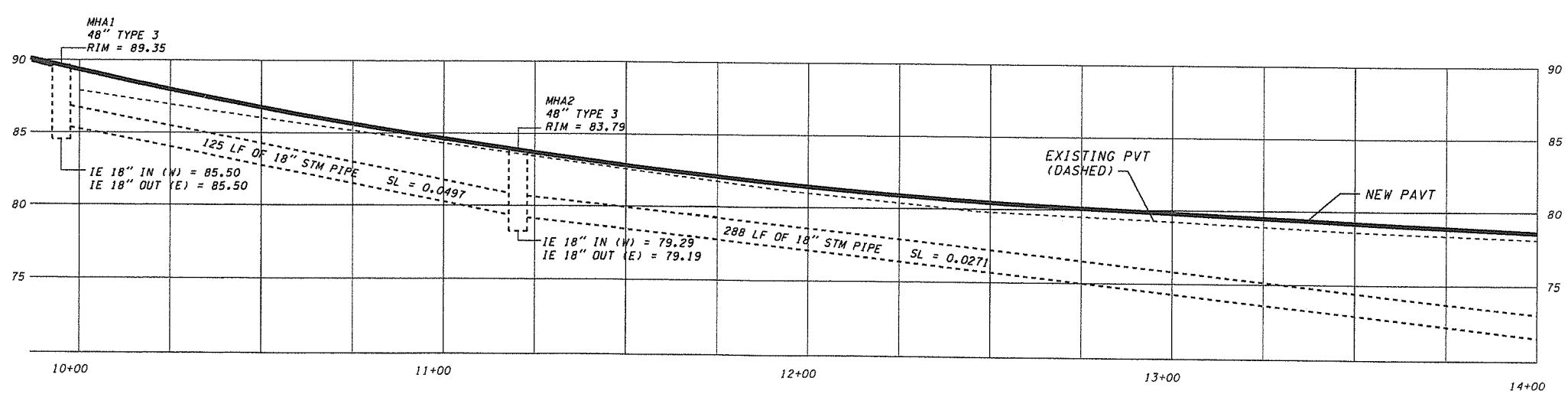

NOTES:
FOR MANHOLE DETAILS, SEE DETAIL DD3-A

FOR COMB. CURB INLET DETAILS, SEE DETAIL DD1-A

FOR CURB INLET DETAILS, SEE DETAIL DD1-A

FOR CURB AND GUTTER DETAILS, SEE DETAIL RD2-A

FOR DITCH INLET DETAILS, SEE DETAIL DD1-C

FOR TRENCH CONSTRUCTION, SEE DETAIL DD2-A

POTHOLE UTILITIES BEFORE BEGINNING CONSTRUCTION OF STORM SEWER STRUCTURES. NOTIFY ENGINEER IF THERE IS CONFLICT WITH UTILITY.

DESIGNED	ATH/KAM
DRAWN	CRB
CRP	320322
HOR.	1" = 20'
VERT.	1" = 5'
DATE	11/27/03
DWG:	DP1
SHEET	54 OF 78

CALL 48 HOURS BEFORE YOU DIG
1-800-553-4344
"It's the Law"
NORTHWEST UTILITIES NOTIFICATION CENTER

DON B. OWINGS
STATE OF WASHINGTON
REGISTERED PROFESSIONAL ENGINEER
EXPIRES 09/25/04

DESIGN & ENGINEERING DIVISION
DESIGN SECTION

NE 117th STREET
DRAINAGE PLAN B.O.P. TO STA 14+00

proud past, promising future

CLARK COUNTY
WASHINGTON

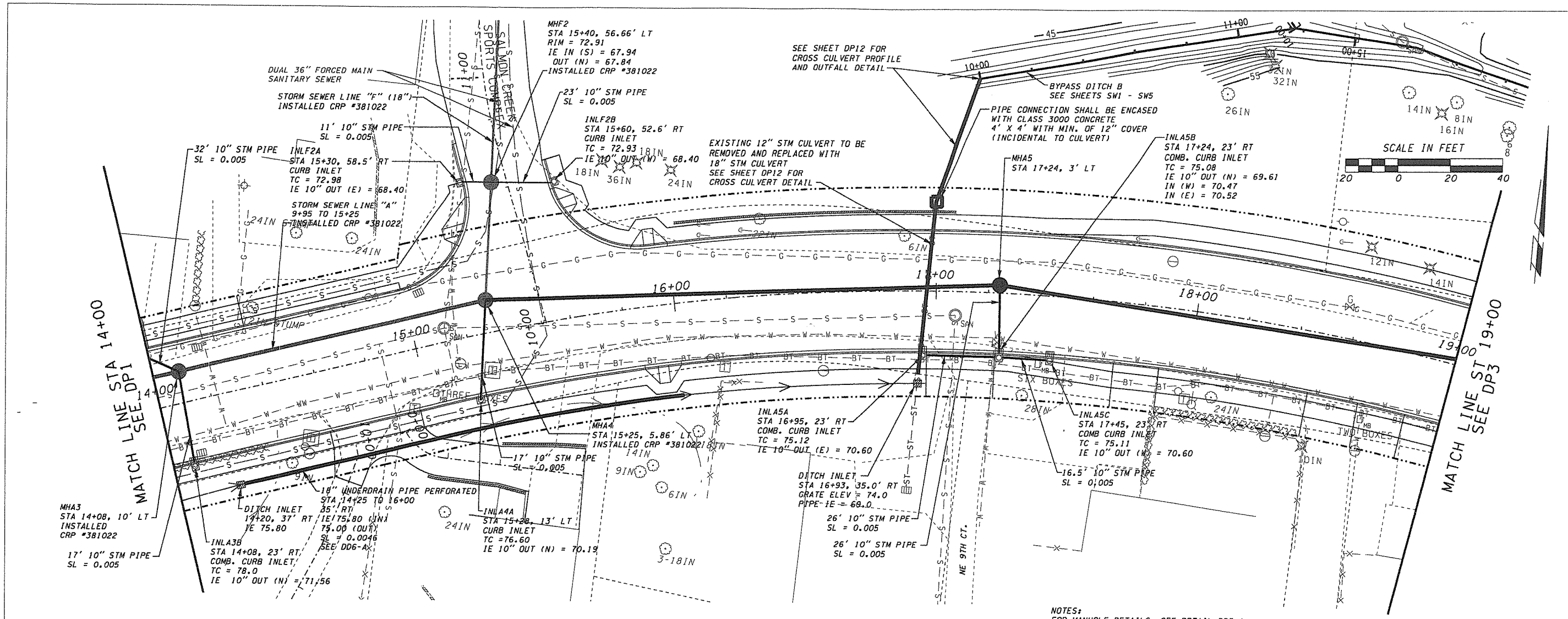

NOTES:
FOR MANHOLE DETAILS, SEE DETAIL DD3-A

FOR COMB. CURB INLET DETAILS, SEE DETAIL DD1-A

FOR CURB INLET DETAILS, SEE DETAIL DD1-A

FOR CURB AND GUTTER DETAILS, SEE DETAIL RD2-A

FOR DITCH INLET DETAILS, SEE DETAIL DD1-C

FOR TRENCH CONSTRUCTION, SEE DETAIL DD2-A

POTHOLE UTILITIES BEFORE BEGINNING CONSTRUCTION
OF STORM SEWER STRUCTURES. NOTIFY ENGINEER
IF THERE IS CONFLICT WITH UTILITY.

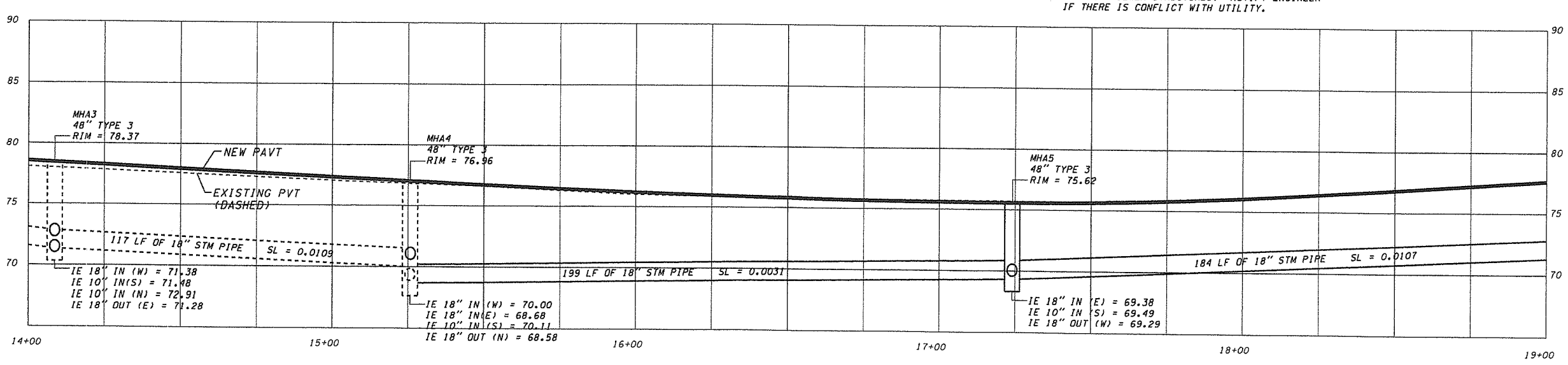

DESIGNED ATH/KAM
DRAWN CRB
CRP 320322
HOR. 1" = 20'
VERT. 1" = 5'
DATE 11/27/03
DWG: DP2
SHEET 55 OF 78

CALL 48 HOURS BEFORE YOU DIG
1-800-553-4344
"It's the Law"
NORTHWEST UTILITIES NOTIFICATION CENTER

DUANE R. OWTOSS
STATE OF WASHINGTON
38009
REGISTERED PROFESSIONAL ENGINEER
EXPIRES 09/25/04

DESIGN & ENGINEERING DIVISION
DESIGN SECTION

NE 117th STREET
DRAINAGE PLAN STA 14+00 TO STA 19+00

proud past, promising future
CLARK COUNTY
WASHINGTON

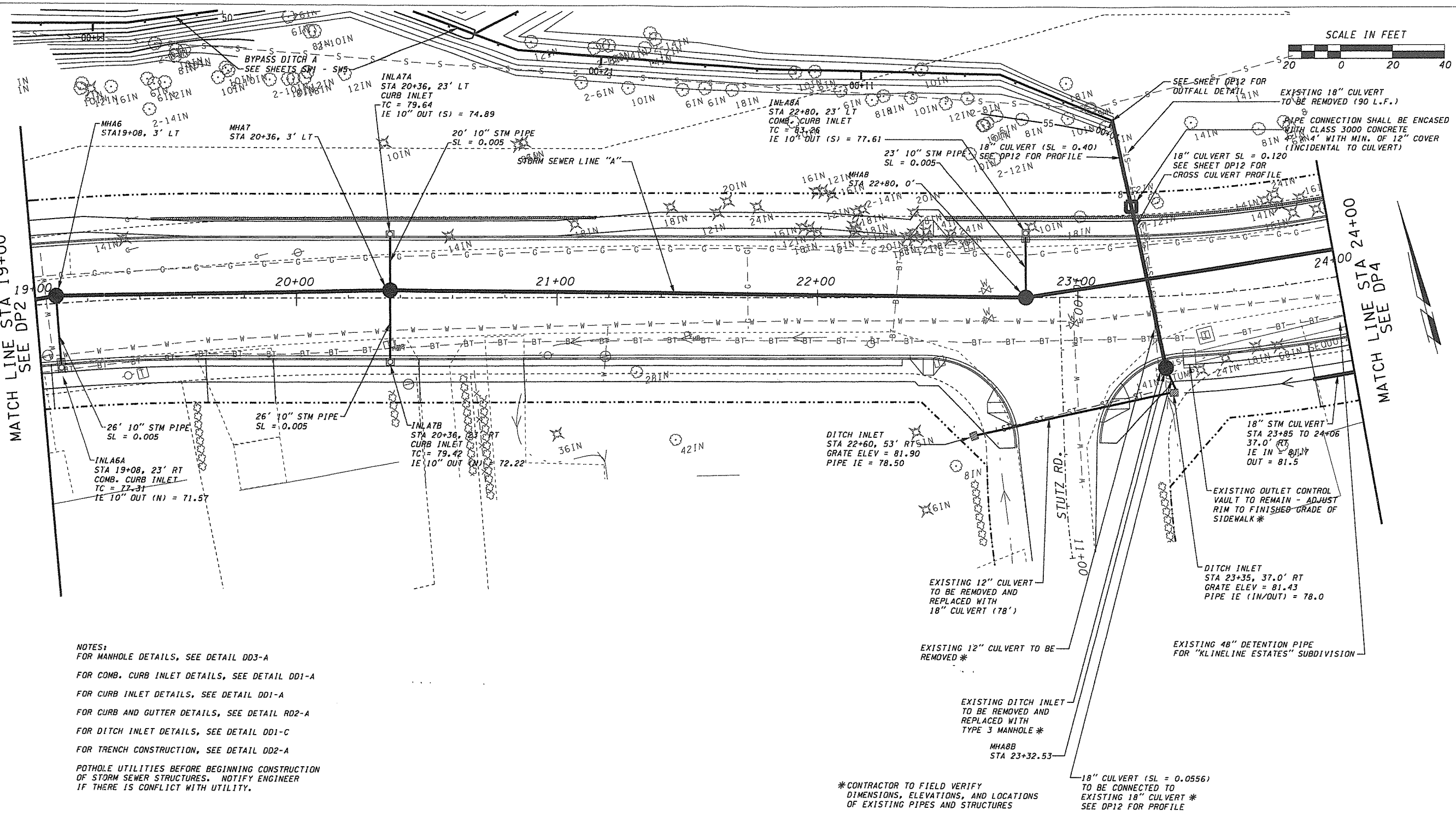

NOTES:
FOR MANHOLE DETAILS, SEE DETAIL DD3-A

FOR COMB. CURB INLET DETAILS, SEE DETAIL DD1-A

FOR CURB INLET DETAILS, SEE DETAIL DD1-A

FOR CURB AND GUTTER DETAILS, SEE DETAIL RD2-A

FOR DITCH INLET DETAILS, SEE DETAIL DD1-C

FOR TRENCH CONSTRUCTION, SEE DETAIL DD2-A

POTHOLE UTILITIES BEFORE BEGINNING CONSTRUCTION
OF STORM SEWER STRUCTURES. NOTIFY ENGINEER
IF THERE IS CONFLICT WITH UTILITY.

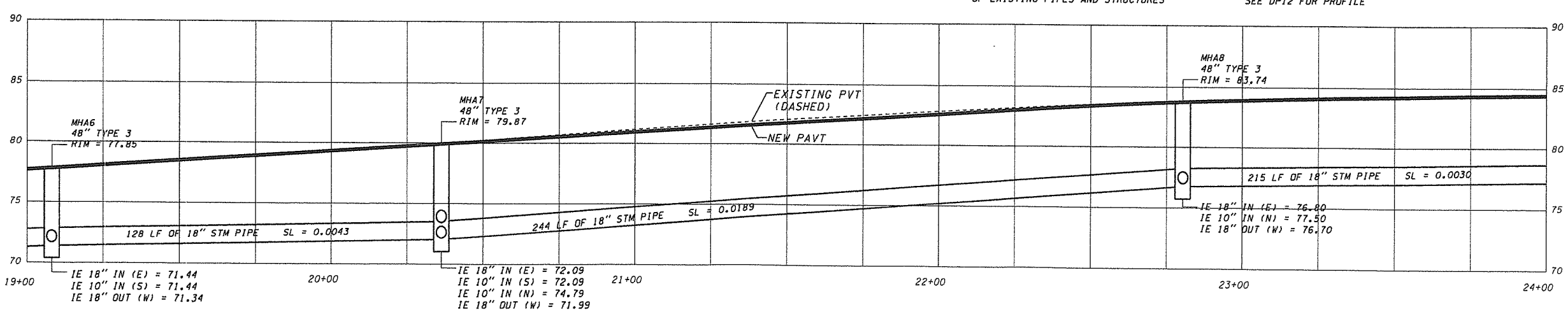

DESIGNED ATH/KAM
DRAWN CRB
CRP 320322
HOR. 1" = 20'
VERT. 1" = 5'
DATE 11/27/03
DWG: DP3
SHEET 56 OF 78

CALL 48 HOURS BEFORE YOU DIG
1-800-553-4344
"It's the Law"
NORTHWEST UTILITIES NOTIFICATION CENTER

DON R. ROBINS
STATE OF WASHINGTON
PROFESSIONAL ENGINEER
EXPIRES 09/26/04

DESIGN & ENGINEERING DIVISION
DESIGN SECTION

NE 117th STREET
DRAINAGE PLAN STA 19+00 TO STA 24+00

proud past, promising future
CLARK COUNTY
WASHINGTON

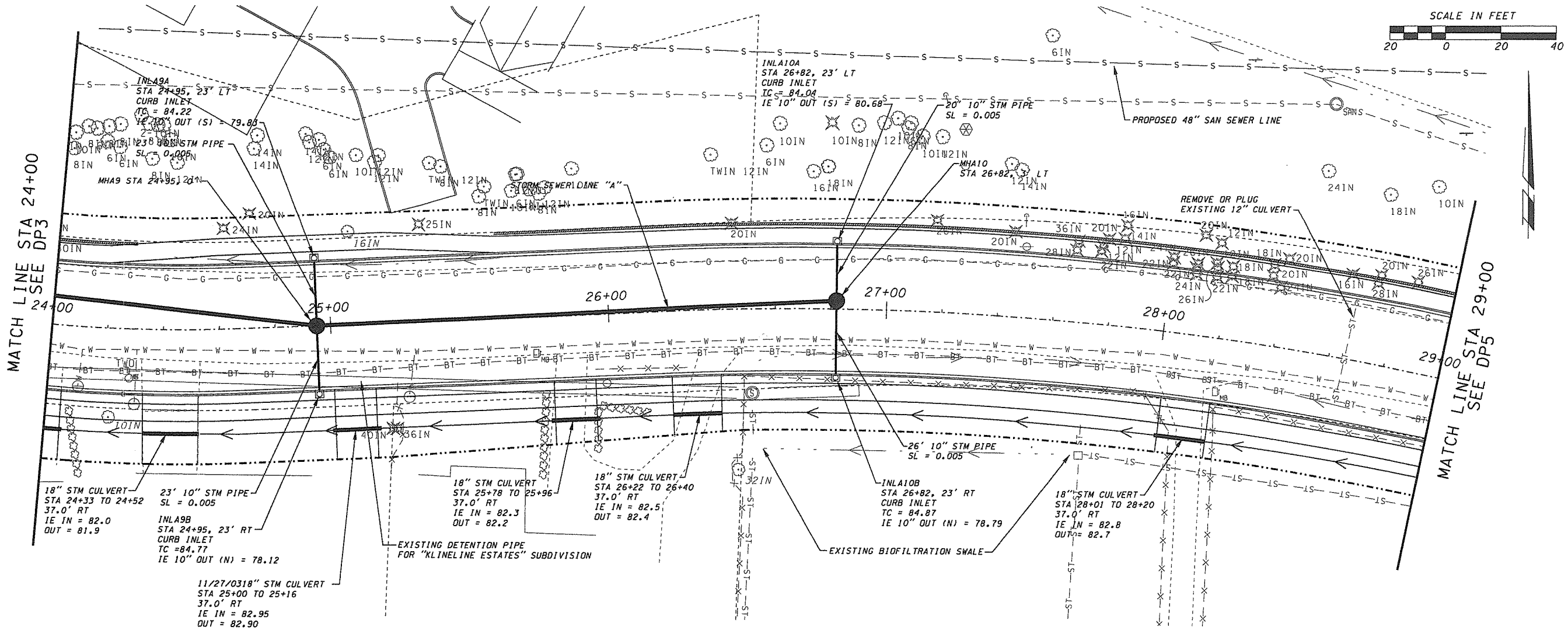

NOTES:
FOR MANHOLE DETAILS, SEE DETAIL DD3-A

FOR COMB. CURB INLET DETAILS, SEE DETAIL DD1-A

FOR CURB INLET DETAILS, SEE DETAIL DD1-A

FOR CURB AND GUTTER DETAILS, SEE DETAIL RD2-A

FOR DITCH INLET DETAILS, SEE DETAIL DD1-C

FOR TRENCH CONSTRUCTION, SEE DETAIL DD2-A

POTHOLE UTILITIES BEFORE BEGINNING CONSTRUCTION OF STORM SEWER STRUCTURES. NOTIFY ENGINEER IF THERE IS CONFLICT WITH UTILITY.

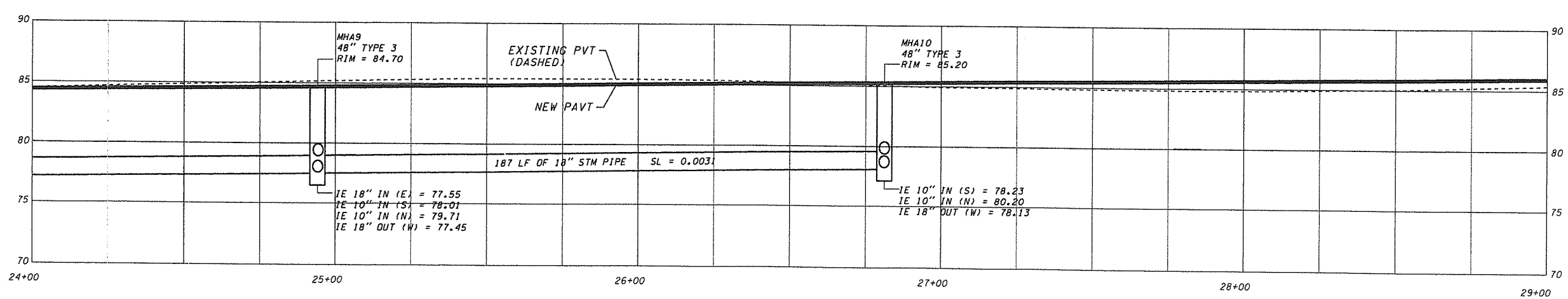

DESIGNED ATH/KAM
DRAWN CRB
CRP 320322
HOR. 1" = 20'
VERT. 1" = 5'
DATE 11/27/03
DWG: DP4
SHEET 57 OF 78

CALL 48 HOURS BEFORE YOU DIG
1-800-553-4344
"It's the Law"
NORTHWEST UTILITIES NOTIFICATION CENTER

DON R. ORINGS
STATE OF WASHINGTON
REGISTERED PROFESSIONAL ENGINEER
EXPIRES 09/25/04

DESIGN & ENGINEERING DIVISION
DESIGN SECTION

NE 117th STREET
DRAINAGE PLAN STA 24+00 TO STA 29+00

proud past, promising future

CLARK COUNTY
WASHINGTON

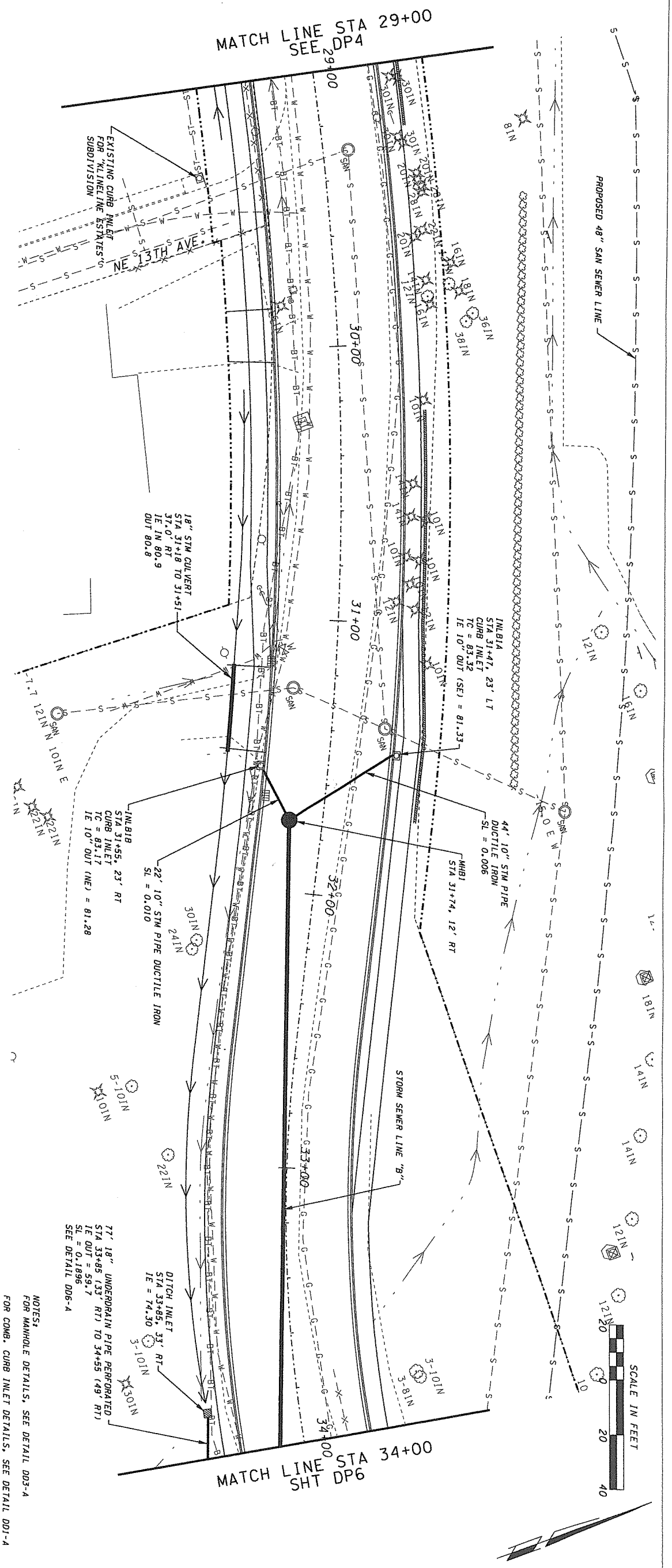

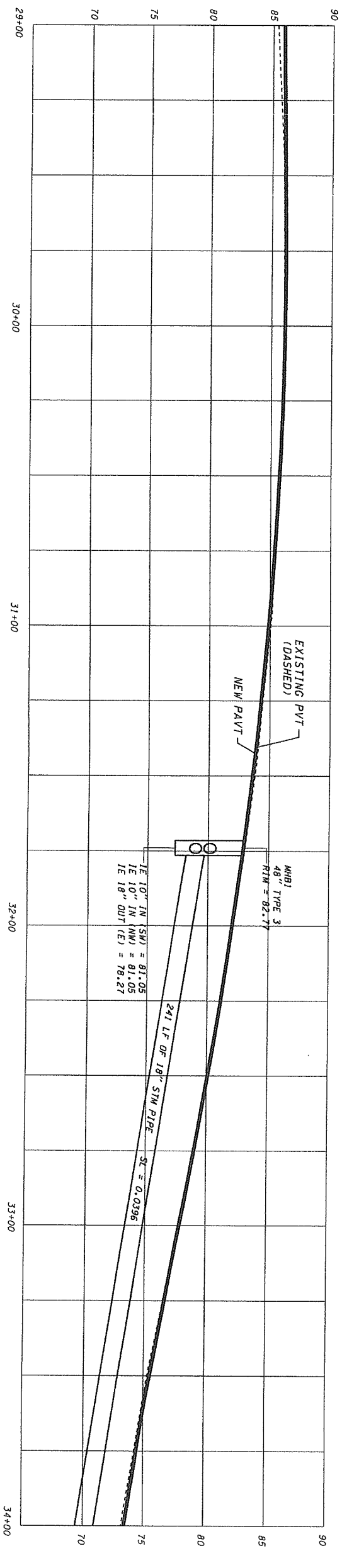

NOTES:
FOR MANHOLE DETAILS, SEE DETAIL DD3-A
FOR COMB. CURB INLET DETAILS, SEE DETAIL DD1-A
FOR CURB INLET DETAILS, SEE DETAIL DD1-A
FOR CURB AND GUTTER DETAILS, SEE DETAIL RD2-A
FOR DITCH INLET DETAILS, SEE DETAIL DD1-C
FOR TRENCH CONSTRUCTION, SEE DETAIL DD2-A
POTHOLE UTILITIES BEFORE BEGINNING CONSTRUCTION OF STORM SEWER STRUCTURES. NOTIFY ENGINEER IF THERE IS CONFLICT WITH UTILITY.

CLARK COUNTY WASHINGTON
proud past, promising future

DESIGN & ENGINEERING DIVISION
DESIGN SECTION

NE 117th STREET
DRAINAGE PLAN STA 29+00 TO STA 34+00

DON R. OWINGS STATE OF WASHINGTON 30306 REGISTERED PROFESSIONAL ENGINEER
EXPIRES 09/25/03

CALL 48 HOURS BEFORE YOU DIG
1-800-553-4344
"It's the Law"
NORTHWEST UTILITIES NOTIFICATION CENTER

DESIGNED	ATH/KAM
DRAWN	CRB
CRP	320322
HOR.	1" = 20'
VERT.	1" = 5'
DATE	11/27/03
DWG:	DP5
SHEET	58 OF 78

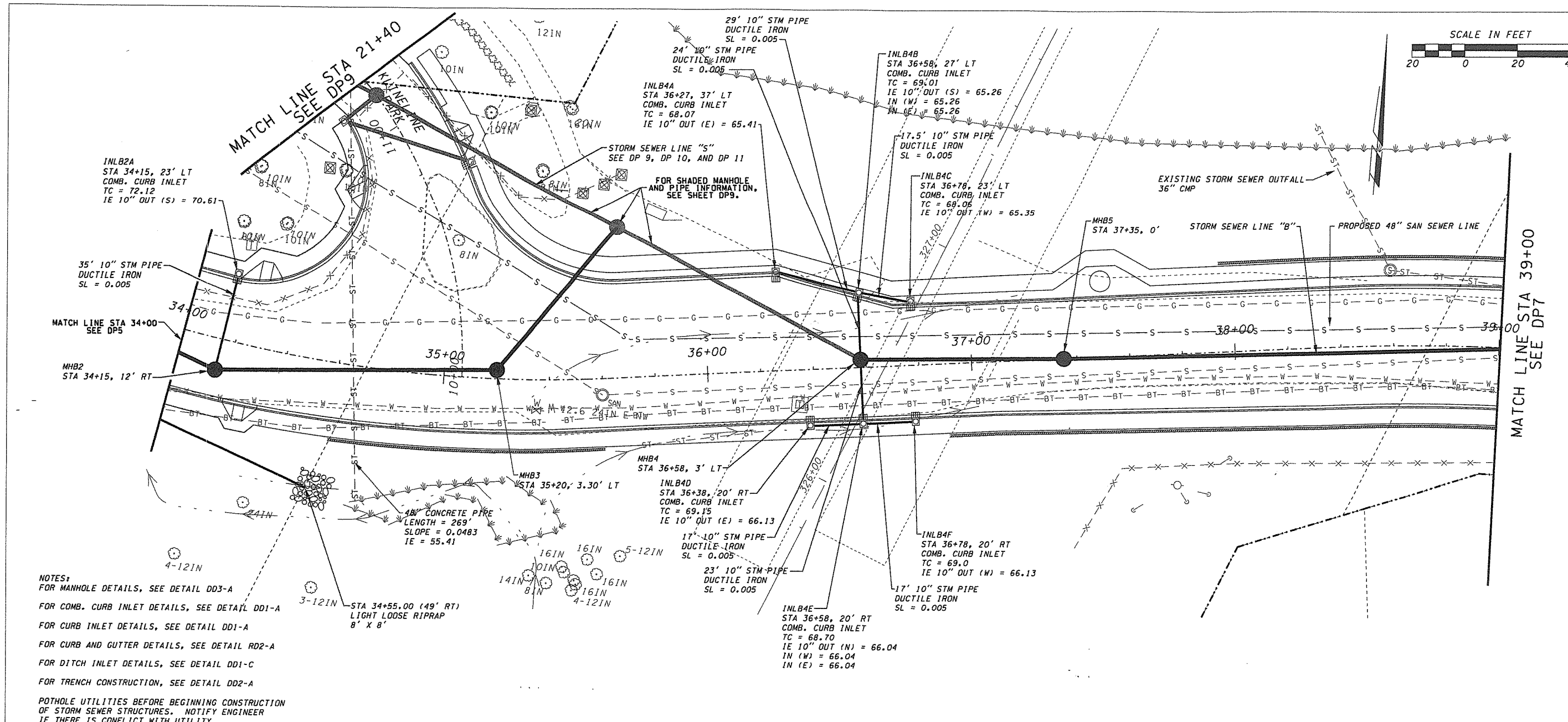

NOTES:
FOR MANHOLE DETAILS, SEE DETAIL DD3-A

FOR COMB. CURB INLET DETAILS, SEE DETAIL DD1-A

FOR CURB INLET DETAILS, SEE DETAIL DD1-A

FOR CURB AND GUTTER DETAILS, SEE DETAIL RD2-A

FOR DITCH INLET DETAILS, SEE DETAIL DD1-C

FOR TRENCH CONSTRUCTION, SEE DETAIL DD2-A

POTHOLE UTILITIES BEFORE BEGINNING CONSTRUCTION OF STORM SEWER STRUCTURES. NOTIFY ENGINEER IF THERE IS CONFLICT WITH UTILITY.

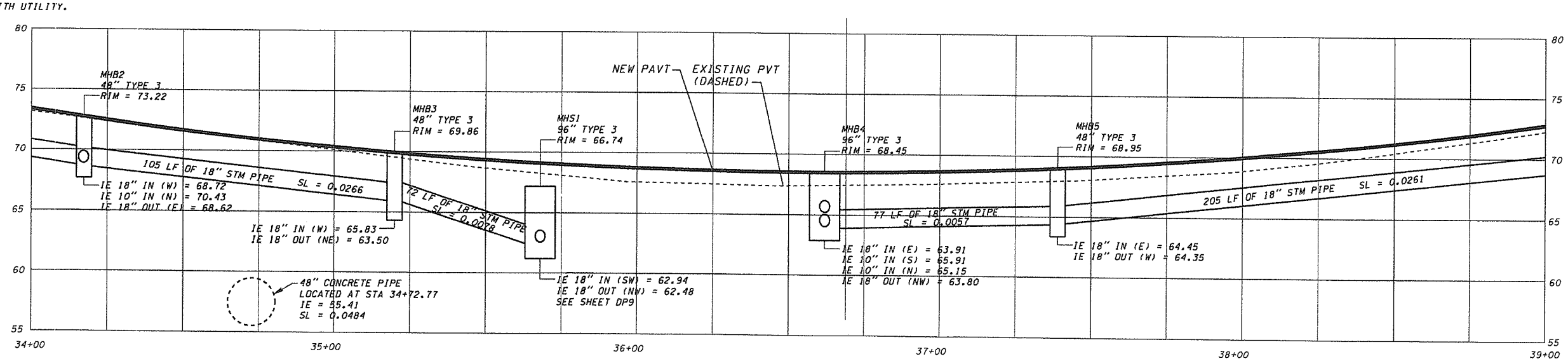

DESIGNED	ATH/KAM
DRAWN	CRB
CRP	320322
HOR.	1" = 20'
VERT.	1" = 5'
DATE	11/27/03
DWG:	DP6
SHEET	59 OF 78

CALL 48 HOURS BEFORE YOU DIG
1-800-553-4344
"It's the Law"
NORTHWEST UTILITIES NOTIFICATION CENTER

EXPIRES 09/25/04

DESIGN & ENGINEERING DIVISION
DESIGN SECTION

NE 117th STREET
DRAINAGE PLAN STA 34+00 TO STA 39+00

proud past, promising future
CLARK COUNTY
WASHINGTON

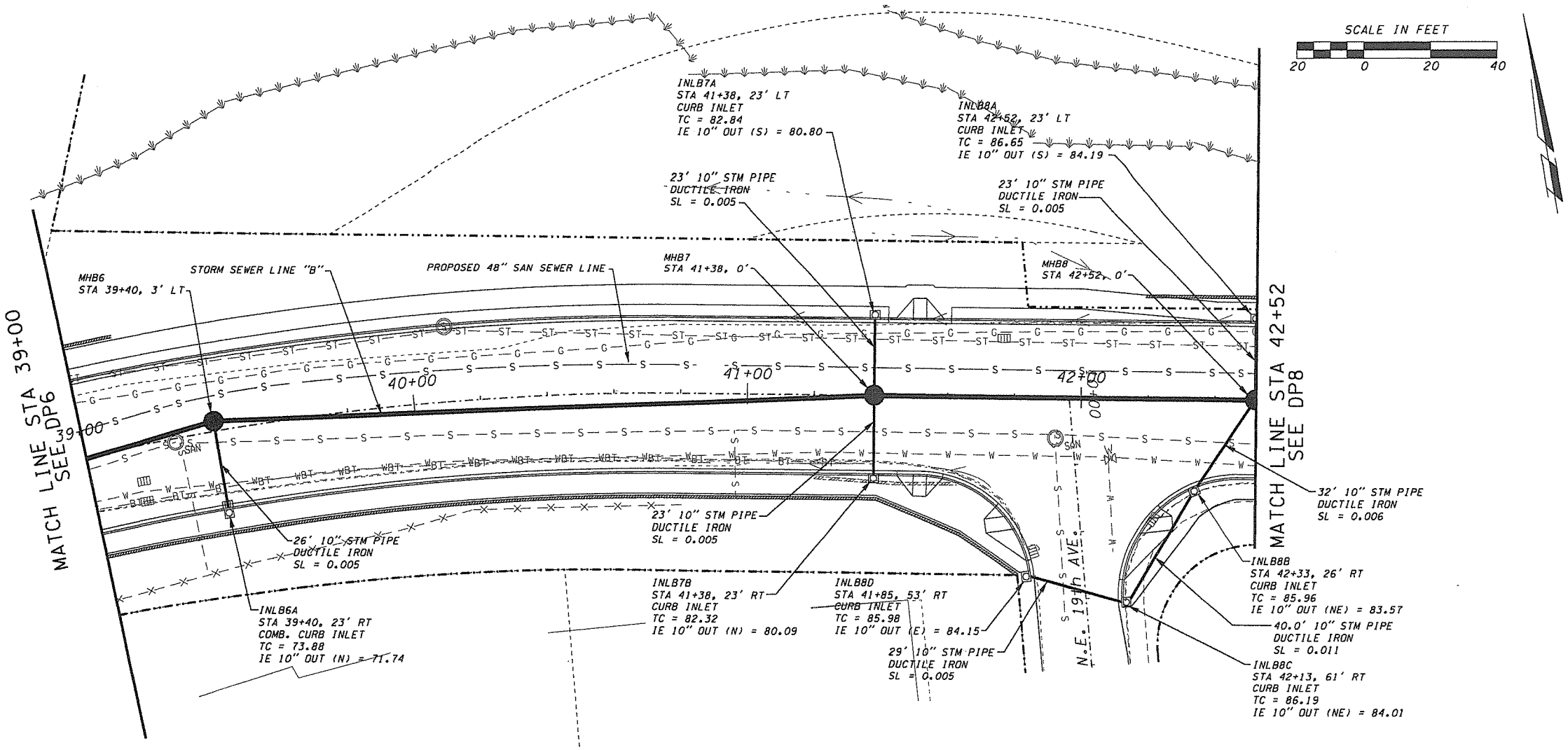

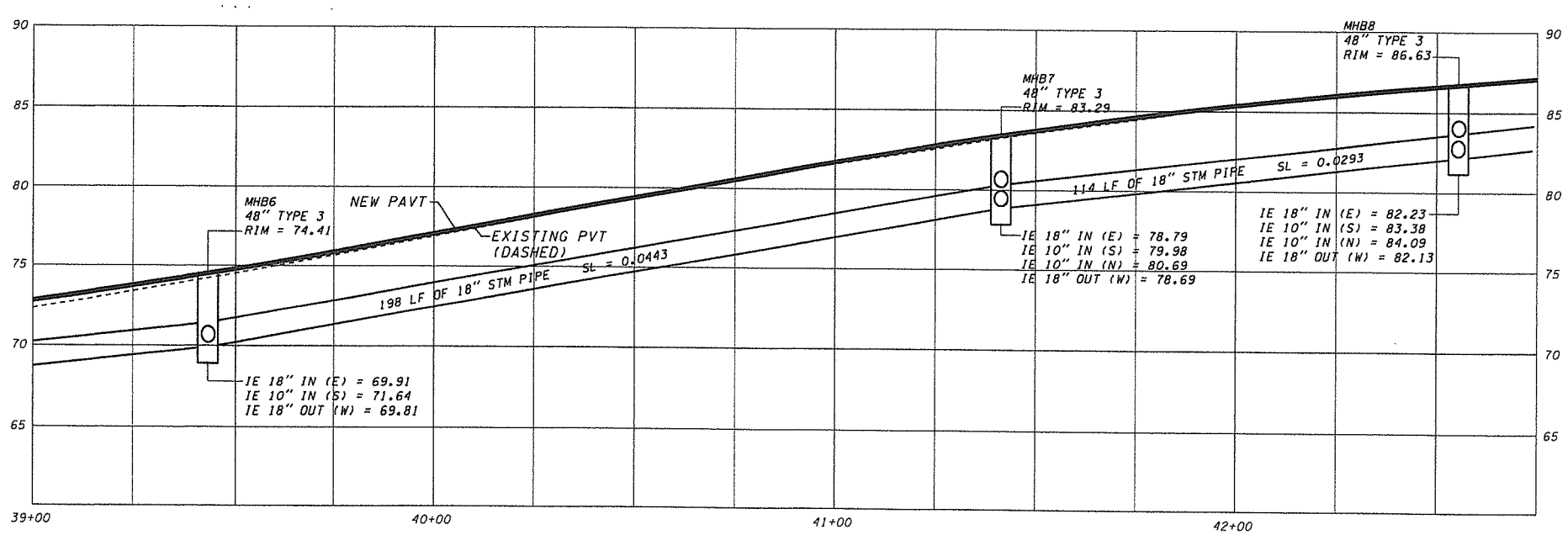

NOTES:
FOR MANHOLE DETAILS, SEE DETAIL DD3-A

FOR COMB. CURB INLET DETAILS, SEE DETAIL DD1-A

FOR CURB INLET DETAILS, SEE DETAIL DD1-A

FOR CURB AND GUTTER DETAILS, SEE DETAIL RD2-A

FOR DITCH INLET DETAILS, SEE DETAIL DD1-C

FOR TRENCH CONSTRUCTION, SEE DETAIL DD2-A

POTHOLE UTILITIES BEFORE BEGINNING CONSTRUCTION OF STORM SEWER STRUCTURES. NOTIFY ENGINEER IF THERE IS CONFLICT WITH UTILITY.

DESIGNED	ATH/KAM
DRAWN	CRB
CRP	320322
HOR.	1" = 20'
VERT.	1" = 5'
DATE	11/27/03
DWG:	DP7
SHEET	60 OF 78

CALL 48 HOURS BEFORE YOU DIG 1-800-553-4344 "It's the Law" NORTHWEST UTILITIES NOTIFICATION CENTER

EXPIRES 09/25/04

DESIGN & ENGINEERING DIVISION
DESIGN SECTION

NE 117th STREET
DRAINAGE PLAN STA 39+00 TO 44+00

proud past, promising future
CLARK COUNTY WASHINGTON

CRP NO. 320322

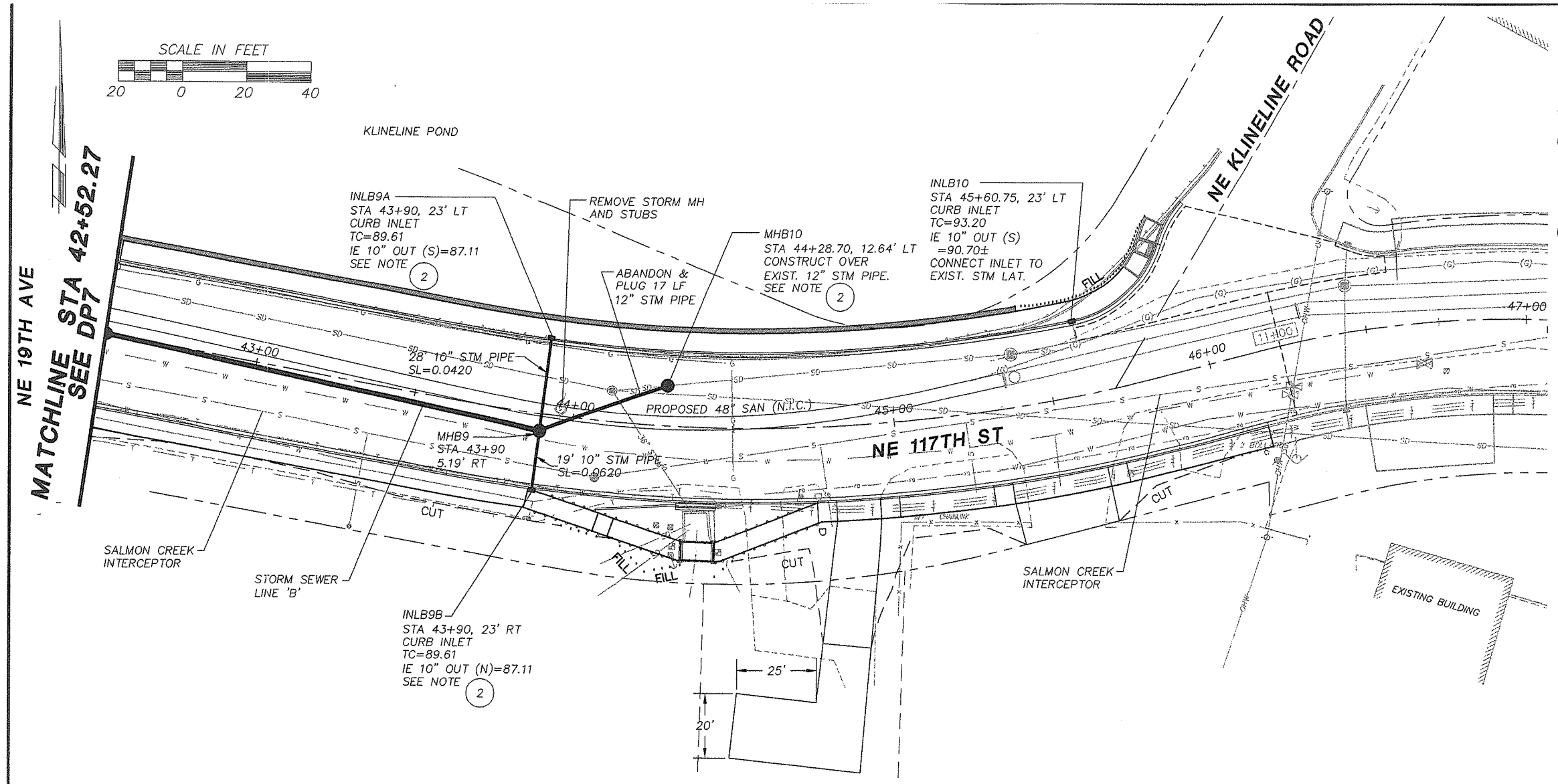

NOTES:

1. PROVIDE NOTICE TO KAY HURST, SALMON CREEK WWTP OPERATIONS MANAGER, AT (360) 397-2271 ONE WEEK PRIOR TO THE START OF ANY WORK WITHIN 10 FEET OF THE SALMON CREEK INTERCEPTOR. SEE SPECIAL PROVISIONS.
2. POTHOLE UTILITIES BEFORE BEGINNING CONSTRUCTION OF STORM SEWER. NOTIFY ENGINEER OF ANY UTILITY CONFLICTS.

DESIGNED WAB/AJL
DRAWN KLB
CRP 320322
HOR. 1"=20'
VERT. 1"=5'
DATE 03-26-04
DWG. DP8
SHEET 61 OF 78

CALL 48 HOURS BEFORE YOU DIG 1-800-553-4344
"It's the Law"
CLARK COUNTY UTILITIES COORDINATING COUNCIL

DESIGN & ENGINEERING DIVISION
DESIGN SECTION

NE 117TH STREET
DRAINAGE PLAN & PROFILE
FROM STA 42+52.27 TO E.O.P.

WAYNE BAUER
STATE OF WASHINGTON
23240
REGISTERED PROFESSIONAL ENGINEER
EXPIRES 4/25/04

W&H PACIFIC
9755 SW Barnes Road
Suite 300
Portland, Oregon 97225
(503)626-0455
(503)528-9776 Fax
whpacific.com

proud past, promising future
CLARK COUNTY
WASHINGTON

4-0466-0801
T119DP8.DWG

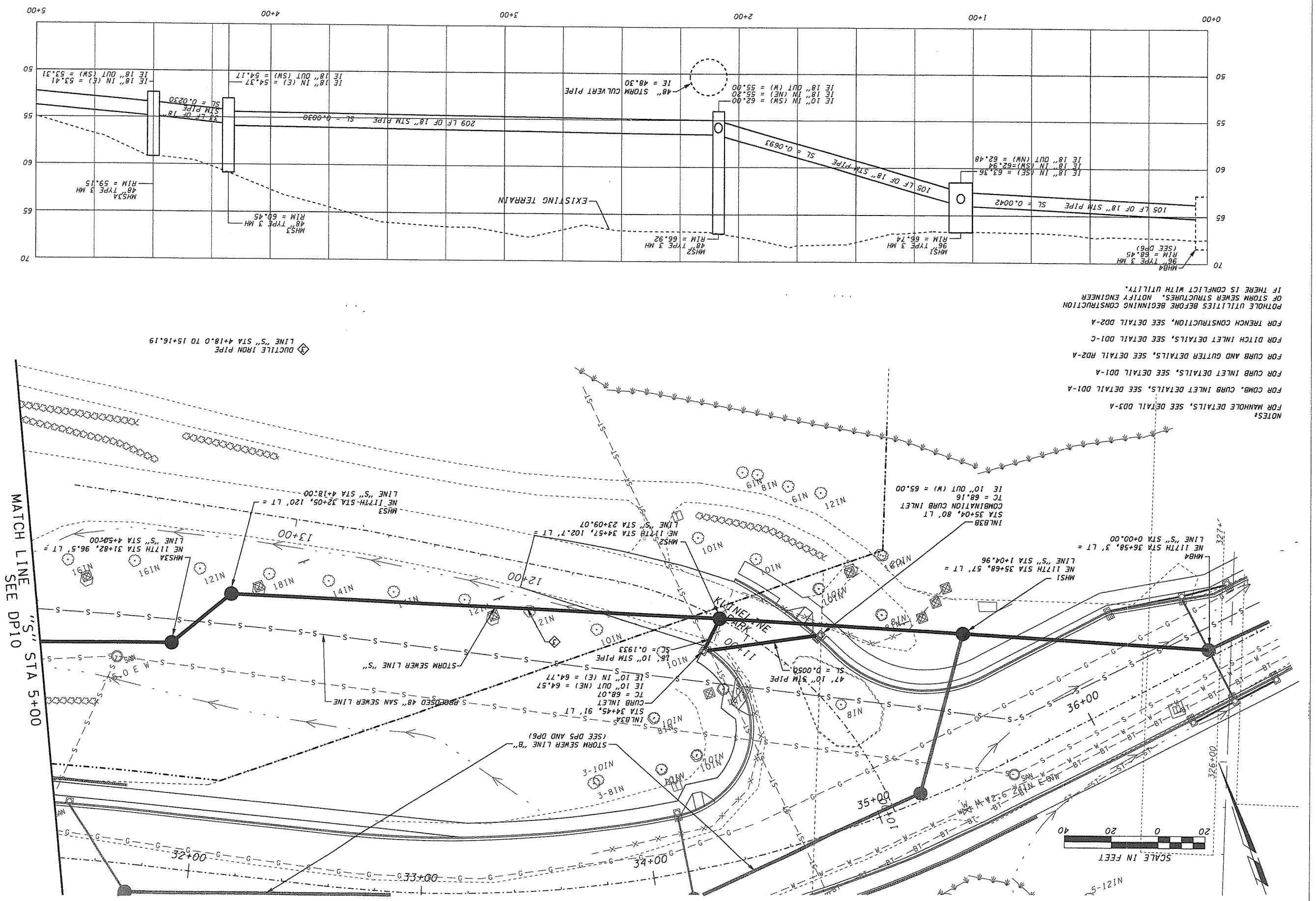

NOTES:
FOR MANHOLE DETAILS, SEE DETAIL DD3-A
FOR COMB. CURB INLET DETAILS, SEE DETAIL DD1-A
FOR CURB INLET DETAILS, SEE DETAIL DD1-A
FOR CURB AND GUTTER DETAILS, SEE DETAIL RD2-A
FOR DITCH INLET DETAILS, SEE DETAIL DD1-C
FOR TRENCH CONSTRUCTION, SEE DETAIL DD2-A
POTHOLE UTILITIES BEFORE BEGINNING CONSTRUCTION OF STORM SEWER STRUCTURES. NOTIFY ENGINEER IF THERE IS CONFLICT WITH UTILITY.

CLARK COUNTY WASHINGTON

proud past, promising future

DESIGN & ENGINEERING DIVISION
DESIGN SECTION

NE 117th STREET

DRAINAGE PLAN-WETLAND FEEDER LINE-STA 0+00 TO 5+00

DON R. OWINGS
STATE OF WASHINGTON
REGISTERED PROFESSIONAL ENGINEER
EXPIRES 09/25/04

CALL 48 HOURS BEFORE YOU DIG
1-800-553-4344
"It's the Law"
NORTHWEST UTILITIES NOTIFICATION CENTER

DESIGNED	ATH/KAM
DRAWN	CRB
CRP	320322
HOR.	1" = 20'
VERT.	1" = 5'
DATE	11/27/03
DWG:	DP9
SHEET	62 OF 78

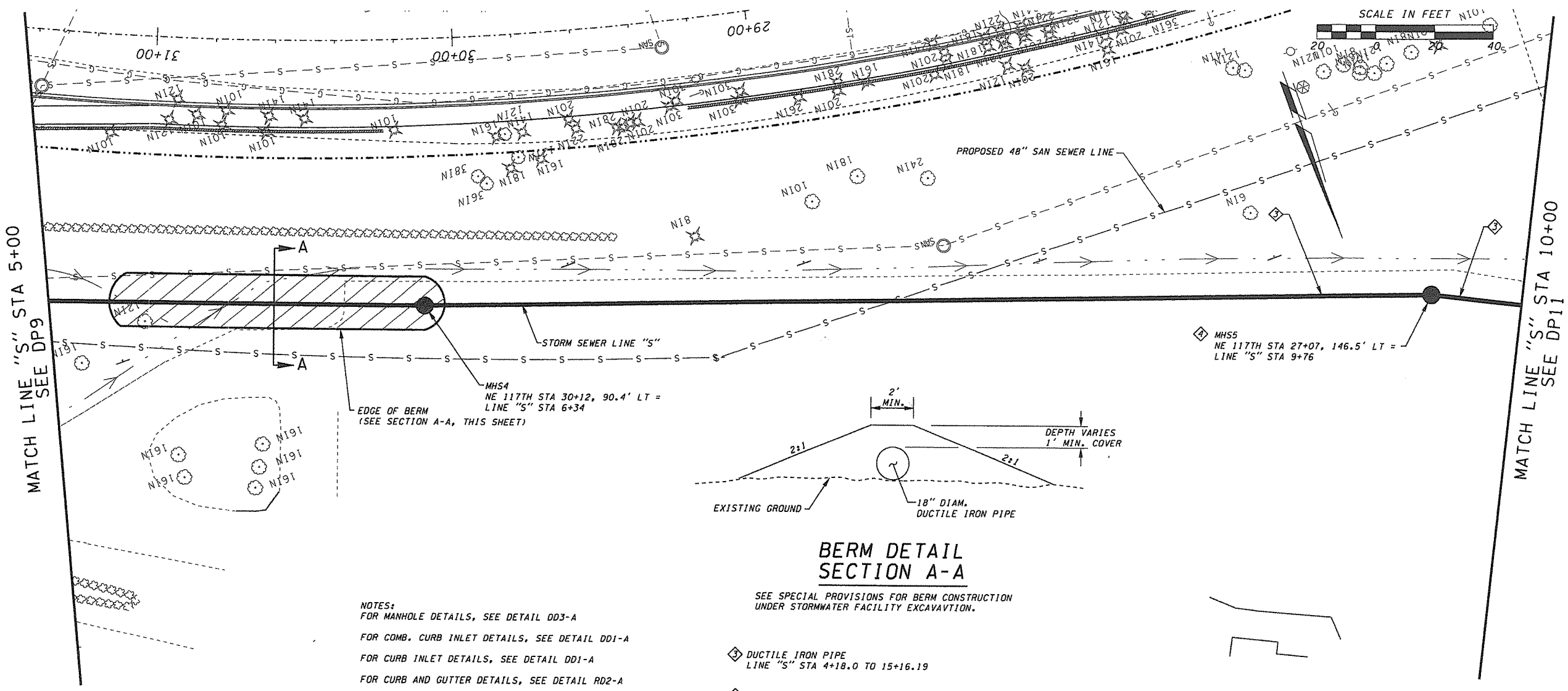

BERM DETAIL
SECTION A-A

SEE SPECIAL PROVISIONS FOR BERM CONSTRUCTION
UNDER STORMWATER FACILITY EXCAVAVTION.

NOTES:
FOR MANHOLE DETAILS, SEE DETAIL DD3-A

FOR COMB. CURB INLET DETAILS, SEE DETAIL DD1-A

FOR CURB INLET DETAILS, SEE DETAIL DD1-A

FOR CURB AND GUTTER DETAILS, SEE DETAIL RD2-A

FOR DITCH INLET DETAILS, SEE DETAIL DD1-C

FOR TRENCH CONSTRUCTION, SEE DETAIL DD2-A

POTHOLE UTILITIES BEFORE BEGINNING CONSTRUCTION
OF STORM SEWER STRUCTURES. NOTIFY ENGINEER
IF THERE IS CONFLICT WITH UTILITY.

(3) DUCTILE IRON PIPE
LINE "S" STA 4+18.0 TO 15+16.19

(4) WATERTIGHT LID

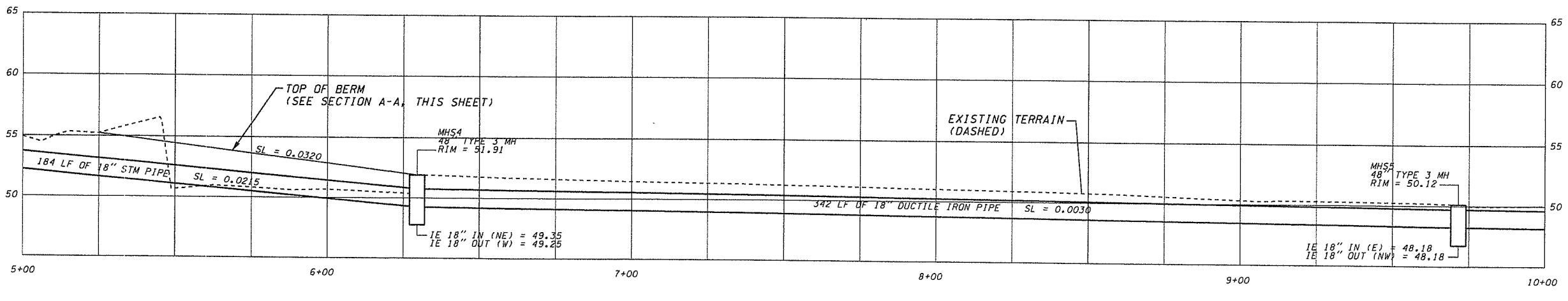

DESIGNED ATH/KAM
DRAWN CRB
CRP 320322
HOR. 1" = 20'
VERT. 1" = 5'
DATE 11/27/03
DWG: DP10
SHEET 63 OF 78

CALL 48 HOURS BEFORE YOU DIG
1-800-553-4344
"It's the Law"
NORTHWEST UTILITIES NOTIFICATION CENTER

DON B. OWINGS
STATE OF WASHINGTON
REGISTERED PROFESSIONAL ENGINEER
EXPIRES 09/25/04

DESIGN & ENGINEERING DIVISION
DESIGN SECTION

NE 117th STREET
DRAINAGE PLAN-WETLAND FEEDER LINE-STA 5+00 TO 10+00

proud past, promising future
CLARK COUNTY
WASHINGTON

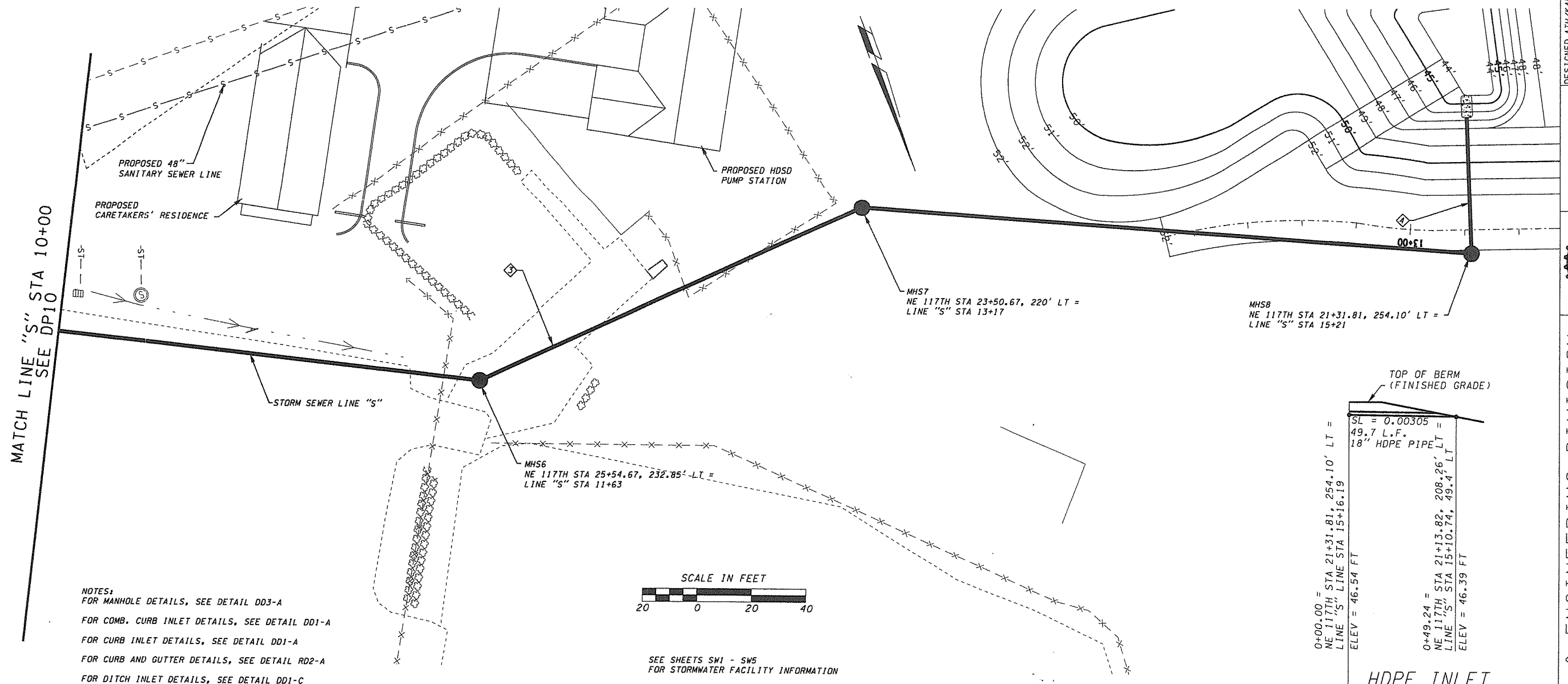

NOTES:
FOR MANHOLE DETAILS, SEE DETAIL DD3-A

FOR COMB. CURB INLET DETAILS, SEE DETAIL DD1-A

FOR CURB INLET DETAILS, SEE DETAIL DD1-A

FOR CURB AND GUTTER DETAILS, SEE DETAIL RD2-A

FOR DITCH INLET DETAILS, SEE DETAIL DD1-C

FOR TRENCH CONSTRUCTION, SEE DETAIL DD2-A

POTHOLE UTILITIES BEFORE BEGINNING CONSTRUCTION OF STORM SEWER STRUCTURES. NOTIFY ENGINEER IF THERE IS CONFLICT WITH UTILITY.

SEE SHEETS SW1 - SW5
FOR STORMWATER FACILITY INFORMATION

3 DUCTILE IRON PIPE
LINE "S" STA 4+18.0 TO 15+16.19

4 HDPE INLET PIPE
SEE PROFILE, THIS SHEET

HDPE INLET PIPE PROFILE

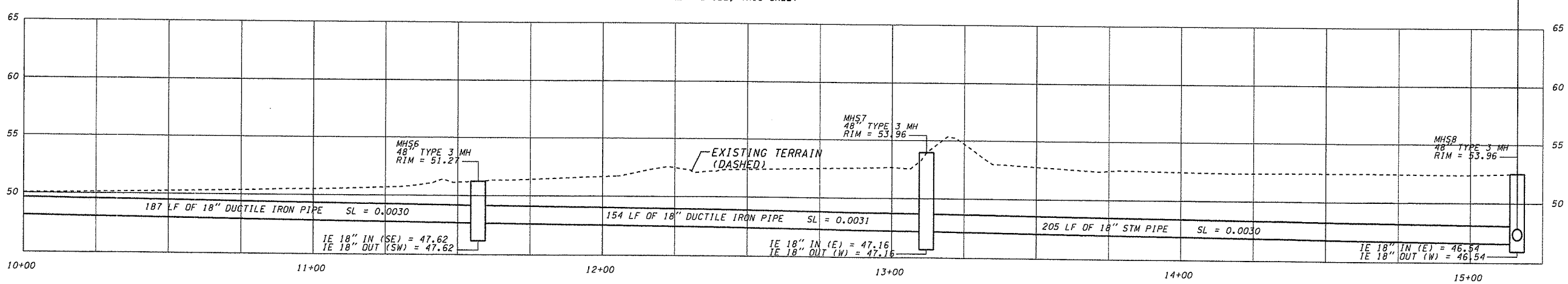

DESIGNED ATH/KAM
DRAWN CRB
CRP 320322
HOR. 1" = 20'
VERT. 1" = 5'
DATE 11/27/03
DWG: DP11
SHEET 64 OF 78

CALL 48 HOURS BEFORE YOU DIG
1-800-553-4344
"It's the Law"
NORTHWEST UTILITIES NOTIFICATION CENTER

DON R. OWINGS
STATE OF WASHINGTON
REGISTERED PROFESSIONAL ENGINEER
EXPIRES 09/25/04

DESIGN & ENGINEERING DIVISION
DESIGN SECTION

NE 117th STREET
DRAINAGE PLAN-WETLAND FEEDER LINE-STA 10+00 TO 15+16

proud past, promising future

CLARK COUNTY
WASHINGTON

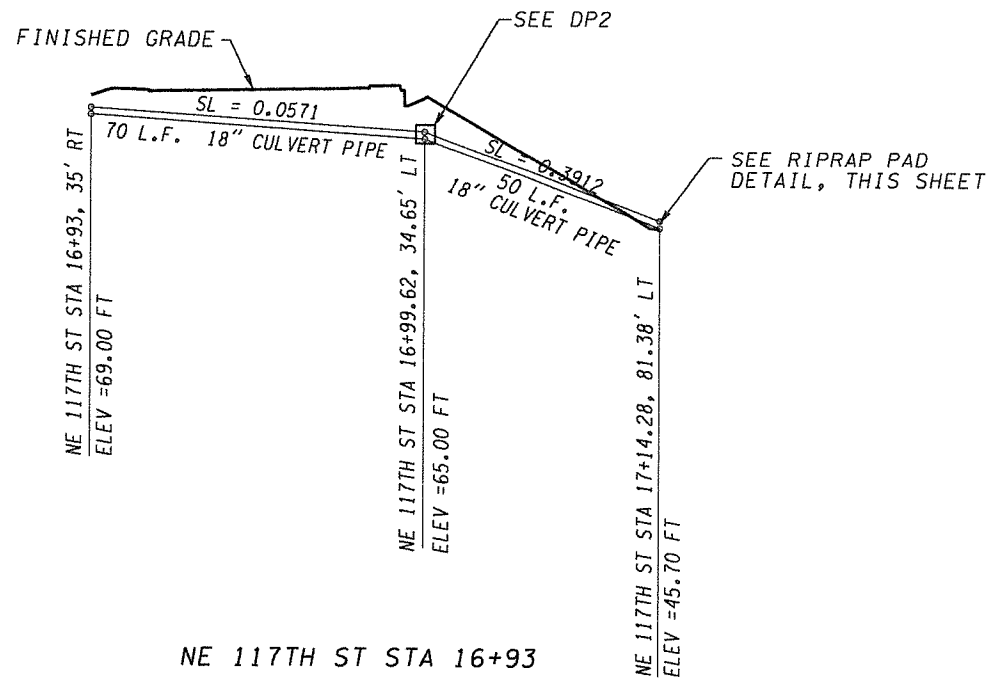

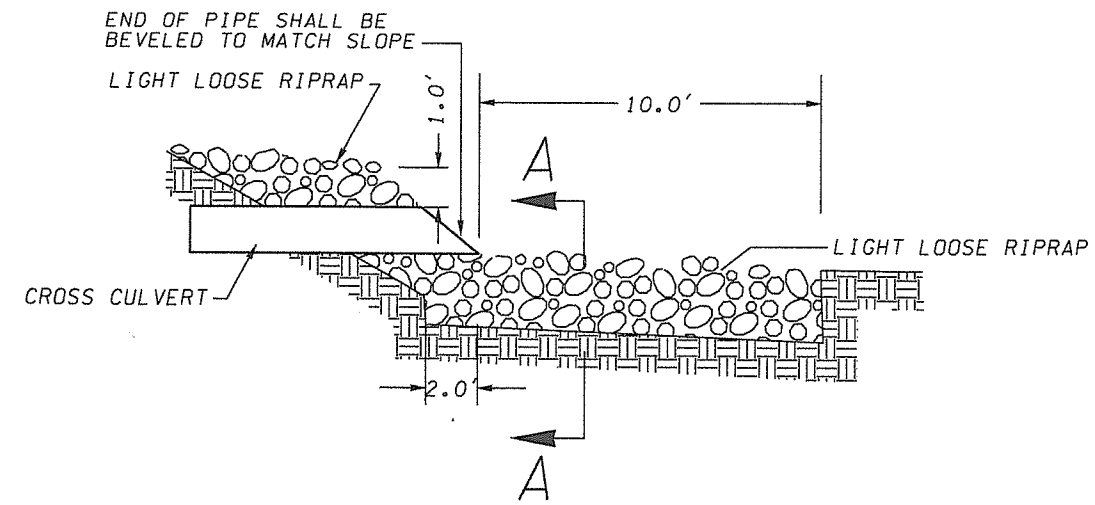

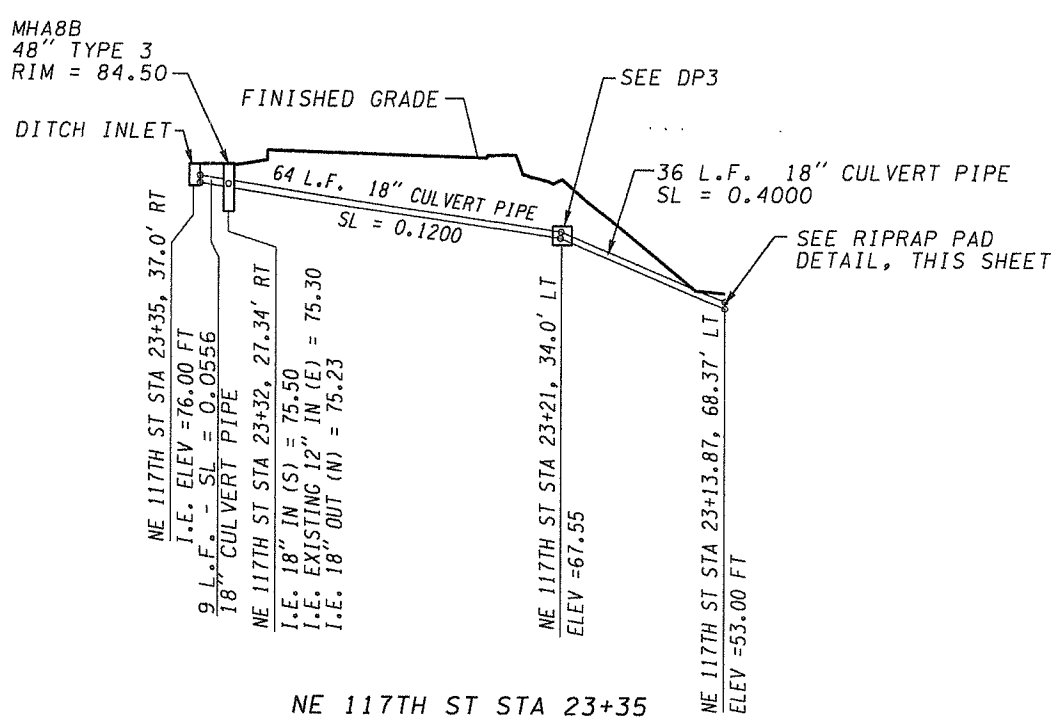

NOTE:
CONTRACTOR TO FIELD VERIFY DIMENSIONS, ELEVATIONS, AND LOCATIONS OF EXISTING PIPES AND STRUCTURES

CROSS CULVERT PROFILE AND DETAIL

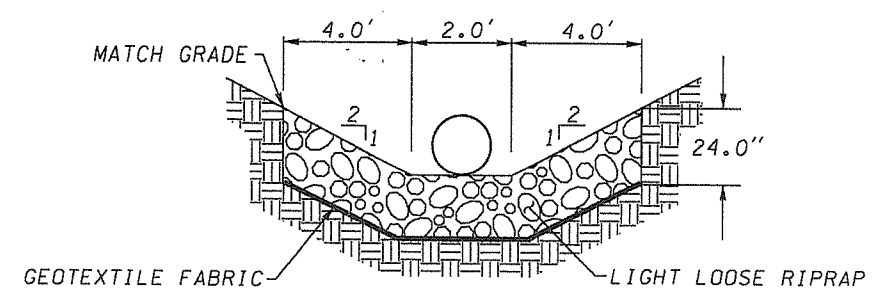

SECTION A-A

RIPRAP PAD DETAIL

DESIGNED ATH/KAM
DRAWN CRB
CRP 320322
HOR. 1" = 20'
VERT. 1" = 5'
DATE 11/21/03
DWG: DP12
SHEET 65 OF 78

CALL 48 HOURS BEFORE YOU DIG
1-800-553-4344
"It's the Law"
NORTHWEST UTILITIES NOTIFICATION CENTER

JOHN B. OWINGS
STATE OF WASHINGTON
EXPIRES SEPT. 25, 2004

DESIGN & ENGINEERING DIVISION
DESIGN SECTION

NE 117th STREET
DRAINAGE PLAN - CROSS CULVERT OUTFALLS

proud past, promising future
CLARK COUNTY WASHINGTON

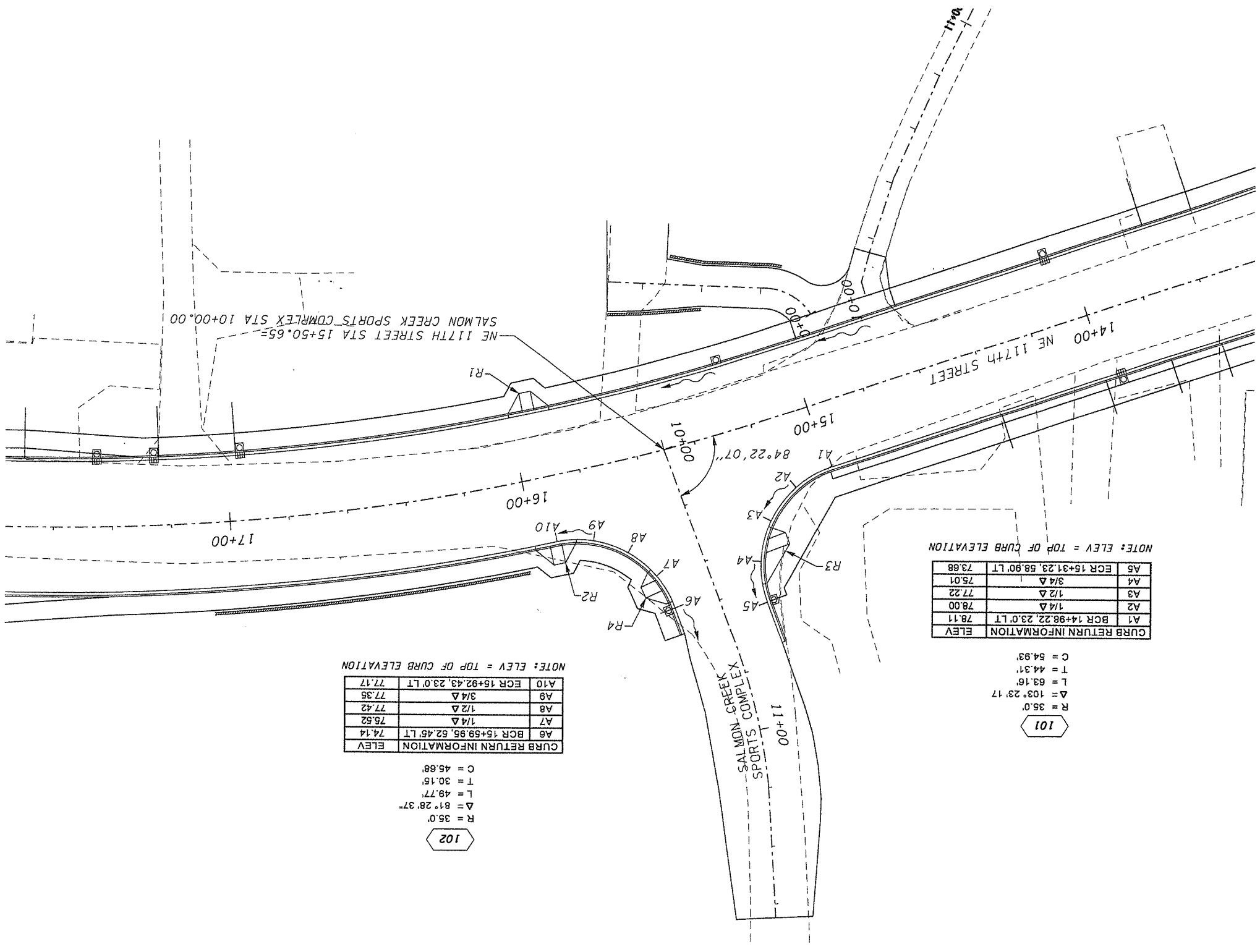

SIDEWALK RAMP SCHEDULE

RAMP	TYPE	FACE OF CURB	BACK OF RAMP
R1	1D	15+94, 23' RT	15+94, 29.5' RT
R2	1C	15+94, 23' LT	15+94, 29.5' LT
R3	1C	10+43, 19' LT	10+43, 27' LT
R4	1C	10+43, 18' RT	10+43, 24' RT

SEE WSDOT STANDARD PLAN F-3a

RAMP OFFSET IS MEASURED FROM CENTERLINE OF RESPECTIVE CROSS STREET TO CENTER OF RAMP

101

R = 35.0'
Δ = 103° 23' 17
L = 63.16'
T = 44.31'
C = 54.93'

NOTE: ELEV = TOP OF CURB ELEVATION

CURB RETURN INFORMATION	ELEV
A1 BCR 14+98.22, 23.0' LT	78.11
A2 1/4 Δ	78.00
A3 1/2 Δ	77.22
A4 3/4 Δ	75.01
A5 ECR 15+31.23, 58.90' LT	73.68

102

R = 35.0'
Δ = 81° 28' 37"
L = 49.77'
T = 30.15'
C = 45.68'

NOTE: ELEV = TOP OF CURB ELEVATION

CURB RETURN INFORMATION	ELEV
A6 BCR 15+59.95, 52.45' LT	74.14
A7 1/4 Δ	75.52
A8 1/2 Δ	77.42
A9 3/4 Δ	77.35
A10 ECR 15+92.43, 23.0' LT	77.17

SCALE IN FEET
20 0 20 40

CLARK COUNTY WASHINGTON

proud past, promising future

DESIGN & ENGINEERING DIVISION
DESIGN SECTION

NE 117th STREET
INTERSECTION PLAN

DON B. OWINGS
STATE OF WASHINGTON
PROFESSIONAL ENGINEER
30035
EXPIRES SEPT. 25, 2004

CALL 48 HOURS BEFORE YOU DIG
1-800-553-4344
"It's the Law"
NORTHWEST UTILITIES NOTIFICATION CENTER

DESIGNED	ATH
DRAWN	CRB
CRP	320322
HOR.	1" = 20'
VERT.	N/A
DATE	9/11/02
DWG:	INT1
SHEET	66 OF 78

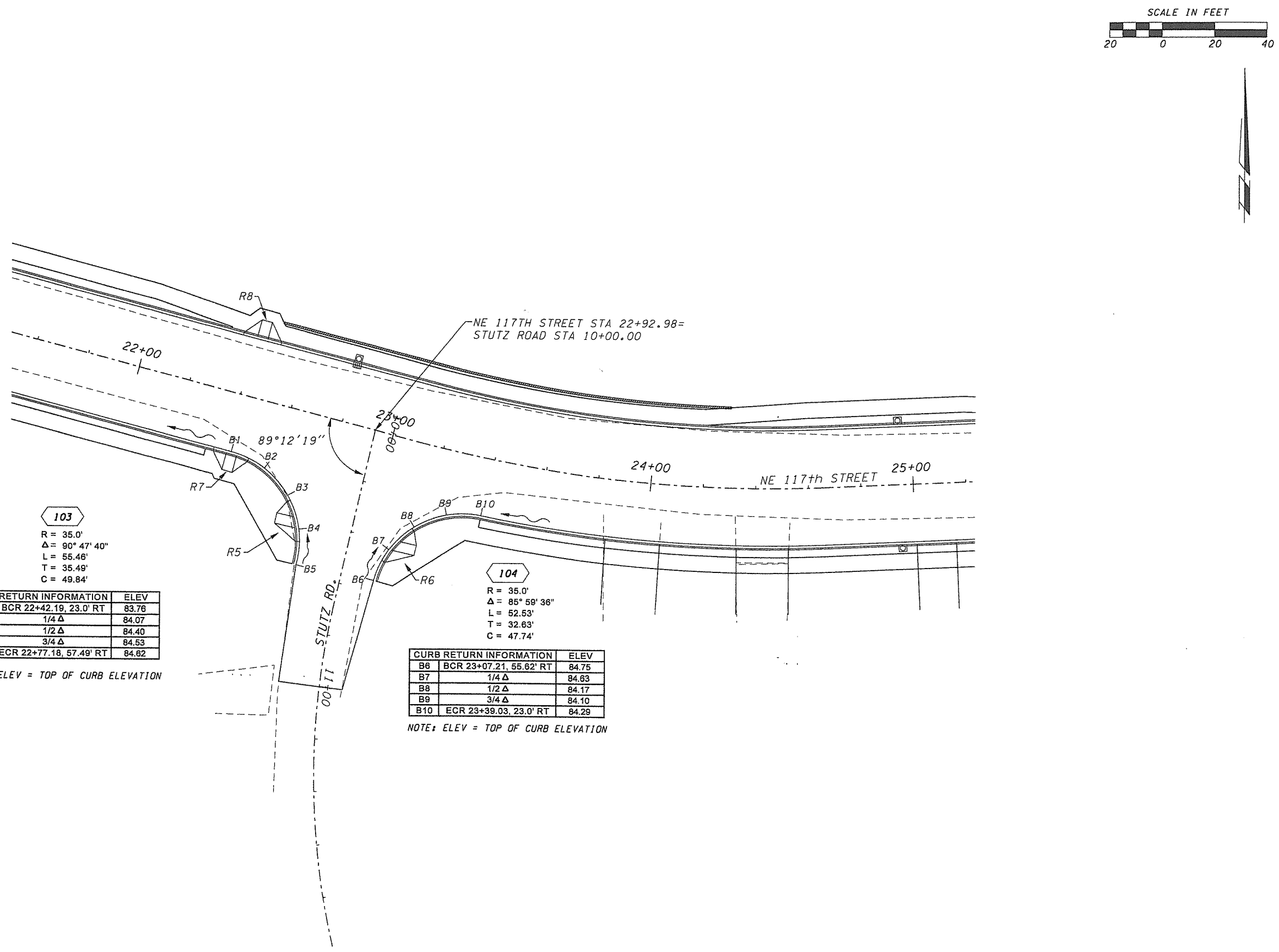

103

R = 35.0'
Δ = 90° 47' 40"
L = 55.46'
T = 35.49'
C = 49.84'

CURB RETURN INFORMATION		ELEV
B1	BCR 22+42.19, 23.0' RT	83.76
B2	1/4 Δ	84.07
B3	1/2 Δ	84.40
B4	3/4 Δ	84.53
B5	ECR 22+77.18, 57.49' RT	84.62

NOTE: ELEV = TOP OF CURB ELEVATION

104

R = 35.0'
Δ = 85° 59' 36"
L = 52.53'
T = 32.63'
C = 47.74'

CURB RETURN INFORMATION		ELEV
B6	BCR 23+07.21, 55.62' RT	84.75
B7	1/4 Δ	84.63
B8	1/2 Δ	84.17
B9	3/4 Δ	84.10
B10	ECR 23+39.03, 23.0' RT	84.29

NOTE: ELEV = TOP OF CURB ELEVATION

SIDEWALK RAMP SCHEDULE

RAMP	TYPE	FACE OF CURB	BACK OF RAMP
R5	1C	10+41, 21.6' RT	10+41, 29.1' RT
R6	1C	10+41, 17.7' LT	10+41, 25.4' LT
R7	1D	22+42, 23' RT	22+42, 32.5' RT
R8	1D	22+42, 23' LT	22+42, 29.5' LT

SEE WSDOT STANDARD PLAN F-3a

RAMP OFFSET IS MEASURED FROM CENTERLINE OF RESPECTIVE CROSS STREET TO CENTER OF RAMP

DESIGNED	ATH
DRAWN	CRB
CRP	320322
HOR.	1" = 20'
VERT.	N/A
DATE	11/27/03
DWG:	INT2
SHEET	67 OF 78

CALL 48 HOURS BEFORE YOU DIG
1-800-553-4344
"It's the Law"
NORTHWEST UTILITIES NOTIFICATION CENTER

DON B. OWINGS
STATE OF WASHINGTON
PROFESSIONAL ENGINEER
EXPIRES SEPT. 25, 2004

DESIGN & ENGINEERING DIVISION
DESIGN SECTION

NE 117th STREET
INTERSECTION PLAN

proud past, promising future

CLARK COUNTY
WASHINGTON

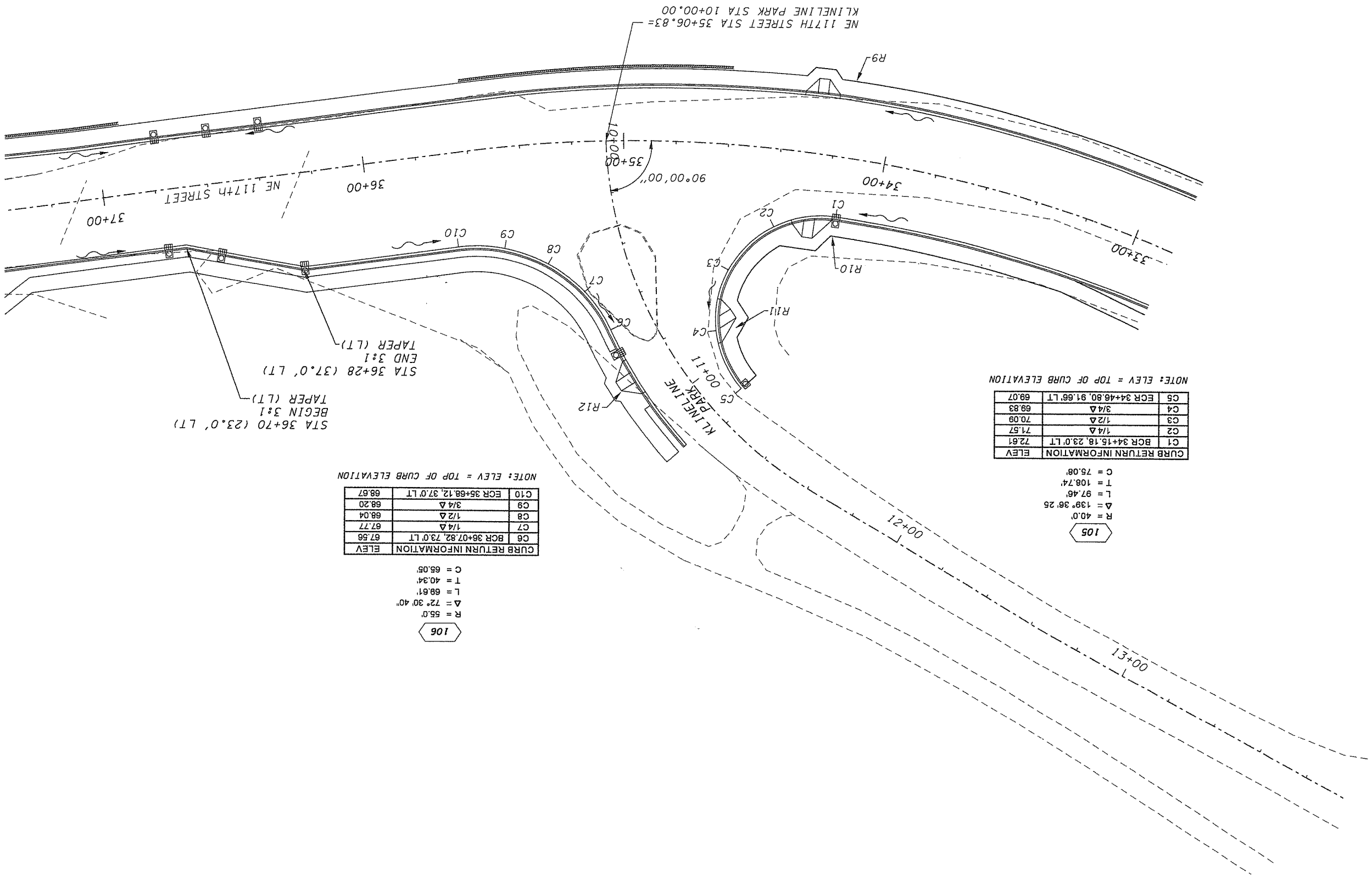

SIDEWALK RAMP SCHEDULE

RAMP	TYPE	FACE OF CURB	BACK OF RAMP
R9	1D	34+20, 23' RT	34+20, 29.5' RT
R10	1D	34+20, 23' LT	34+20, 29.5' LT
R11	1C	10+86, 21.1 LT	10+86, 27.3' LT
R12	1D	10+86, 17.4' RT	10+86, 24' RT

SEE WSDOT STANDARD PLAN F-3a

RAMP OFFSET IS MEASURED FROM CENTERLINE OF RESPECTIVE CROSS STREET TO CENTER OF RAMP

105

R = 40.0'
Δ = 139° 36' 25
L = 97.46'
T = 108.74'
C = 75.08'

CURB RETURN INFORMATION		ELEV
C1	BCR 34+15.18, 23.0' LT	72.61
C2	1/4 Δ	71.57
C3	1/2 Δ	70.09
C4	3/4 Δ	69.83
C5	ECR 34+46.80, 91.66' LT	69.07

NOTE: ELEV = TOP OF CURB ELEVATION

106

R = 55.0'
Δ = 72° 30' 40"
L = 69.61'
T = 40.34'
C = 65.05'

CURB RETURN INFORMATION		ELEV
C6	BCR 36+07.82, 73.0' LT	67.56
C7	1/4 Δ	67.77
C8	1/2 Δ	68.04
C9	3/4 Δ	68.20
C10	ECR 35+68.12, 37.0' LT	68.67

NOTE: ELEV = TOP OF CURB ELEVATION

DESIGN & ENGINEERING DIVISION
DESIGN SECTION

NE 117th STREET
INTERSECTION PLAN

CLARK COUNTY
WASHINGTON

proud past, promising future

DON B. OWINGS
STATE OF WASHINGTON
PROFESSIONAL ENGINEER
EXPIRES SEPT. 25, 2004

CALL 48 HOURS BEFORE YOU DIG
1-800-553-4344
"It's the Law"
NORTHWEST UTILITIES NOTIFICATION CENTER

DESIGNED	ATH
DRAWN	CRB
CRP	320322
HDR.	1" = 20'
VERT.	N/A
DATE	11/27/03
DWG:	INT3
SHEET	68 OF 78

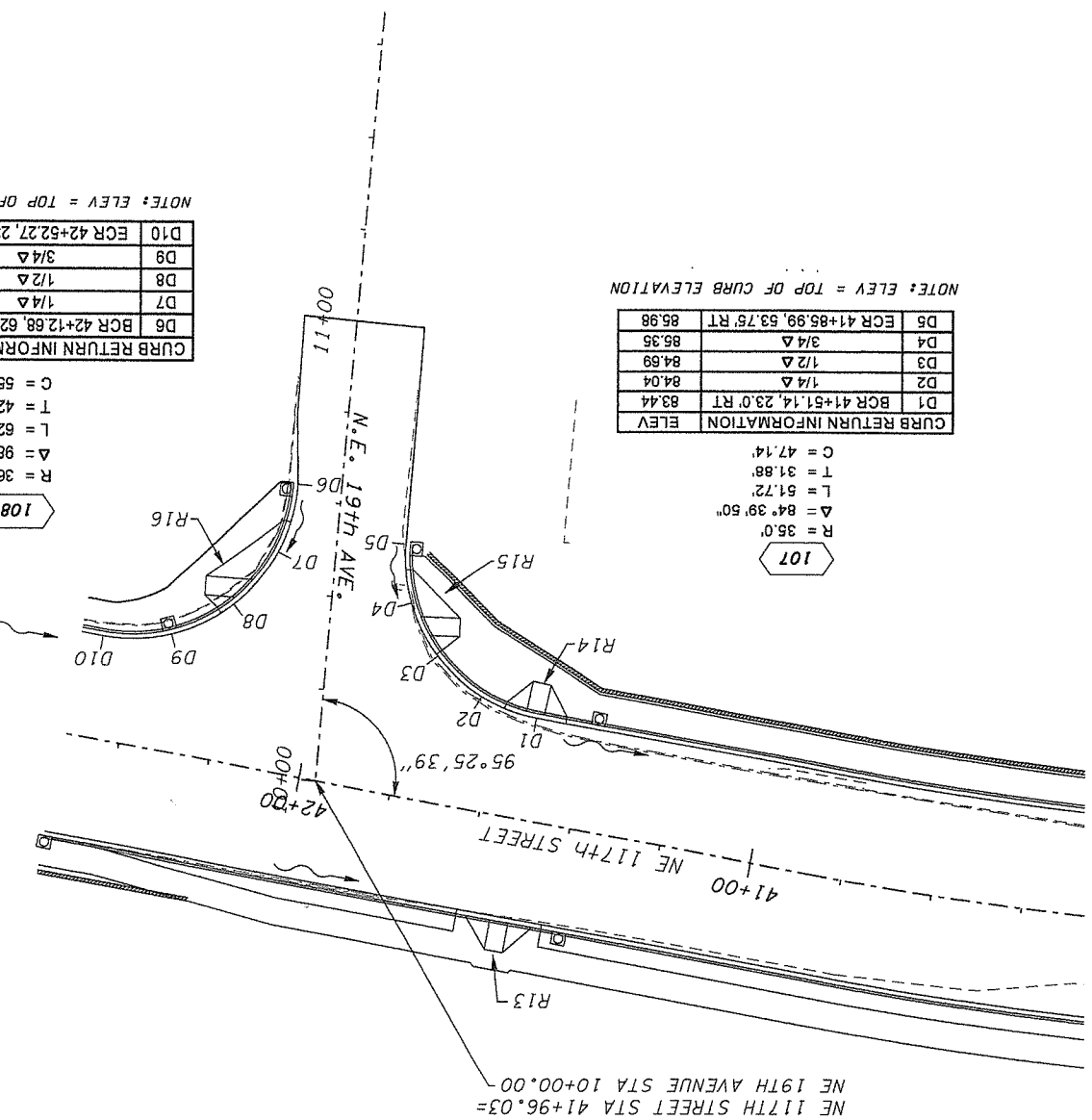

107

R = 35.0'
Δ = 84° 39' 50"
L = 51.72'
T = 31.88'
C = 47.14'

CURB RETURN INFORMATION		ELEV
D1	BCR 41+51.14, 23.0' RT	83.44
D2	1/4 Δ	84.04
D3	1/2 Δ	84.69
D4	3/4 Δ	85.35
D5	ECR 41+85.99, 53.75' RT	85.98

NOTE: ELEV = TOP OF CURB ELEVATION

108

R = 36.50'
Δ = 98° 31' 24"
L = 62.76'
T = 42.38'
C = 55.31'

CURB RETURN INFORMATION		ELEV
D6	BCR 42+12.68, 62.04' RT	86.24
D7	1/4 Δ	86.15
D8	1/2 Δ	86.09
D9	3/4 Δ	85.96
D10	ECR 42+52.27, 23.0' RT	86.05

NOTE: ELEV = TOP OF CURB ELEVATION

SIDEWALK RAMP SCHEDULE

RAMP	TYPE	FACE OF CURB	BACK OF RAMP
R13	1D	41+51.5, 23.0' LT	41+55.5, 32.5' LT
R14	1D	41+50.5, 23.0' RT	41+55.5, 24.5' RT
R15	1C	10+40, 18.0' RT	10+40, 24.0' RT
R16	1C	10+40, 18.0' LT	10+40, 24.0' LT

SEE WSDOT STANDARD PLAN F-3a

RAMP OFFSET IS MEASURED FROM CENTERLINE OF RESPECTIVE CROSS STREET TO CENTER OF RAMP

SCALE IN FEET
20 0 20 40

CLARK COUNTY WASHINGTON
proud past, promising future

DESIGN & ENGINEERING DIVISION
DESIGN SECTION

NE 117th STREET
INTERSECTION PLAN

DON B. OWINGS
STATE OF WASHINGTON
PROFESSIONAL ENGINEER
EXPIRES SEPT. 25, 2004

CALL 48 HOURS BEFORE YOU DIG
1-800-553-4344
"It's the Law"
NORTHWEST UTILITIES NOTIFICATION CENTER

DESIGNED	ATH
DRAWN	CRB
CRP	320322
HOR.	1" = 20'
VERT.	N/A
DATE	11/27/03
DWG:	INT4
SHEET	69 OF 78

CRP NO. 320322

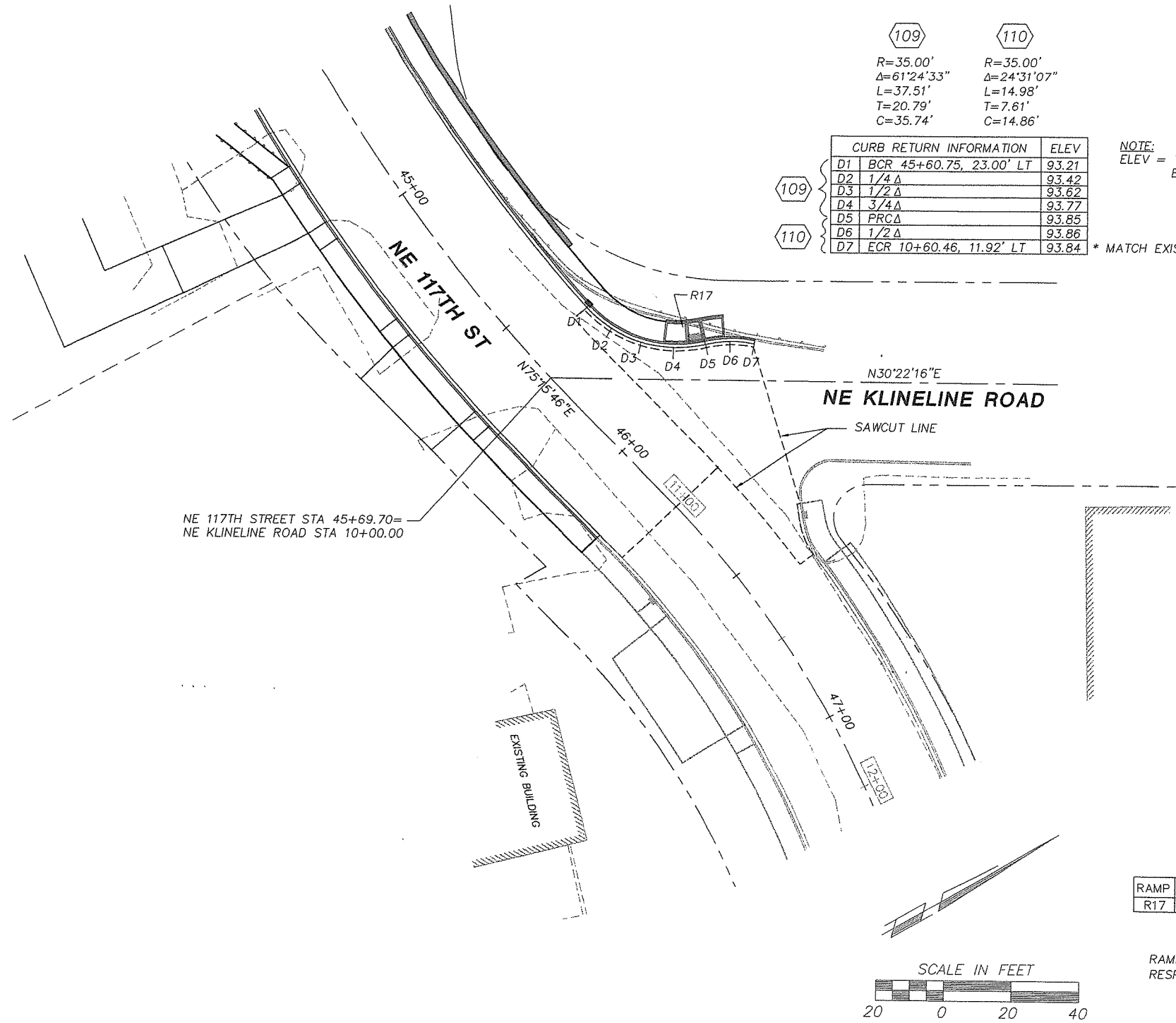

109

R=35.00'
Δ=61°24'33"
L=37.51'
T=20.79'
C=35.74'

110

R=35.00'
Δ=24°31'07"
L=14.98'
T=7.61'
C=14.86'

	CURB RETURN INFORMATION	ELEV
D1	BCR 45+60.75, 23.00' LT	93.21
D2	1/4 Δ	93.42
D3	1/2 Δ	93.62
D4	3/4 Δ	93.77
D5	PRC Δ	93.85
D6	1/2 Δ	93.86
D7	ECR 10+60.46, 11.92' LT	93.84

109 110

* MATCH EXIST.

NOTE:
ELEV = TOP OF CURB ELEVATION

SIDEWALK RAMP SCHEDULE

RAMP	TYPE	FACE OF CURB	BACK OF RAMP
R17	3	10+43.11, 11.48' LT	10+42.08, 17.39' LT

SEE WSDOT STANDARD PLAN F-3a

RAMP OFFSET IS MEASURED FROM CENTERLINE OF RESPECTIVE CROSS STREET TO CENTER OF RAMP

DESIGNED WAB/AJL
DRAWN KLB
CRP 320322
HOR. 1"=20'
VERT. 1"=5'
DATE 03-26-04
DWG. INT5
SHEET 70 OF 78

CALL 48 HOURS BEFORE YOU DIG
1-800-553-4344
"It's the Law"
CLARK COUNTY UTILITIES COORDINATING COUNCIL

DESIGN & ENGINEERING DIVISION
DESIGN SECTION

NE 117TH STREET
KLINELINE ROAD
FROM STA 10+00 TO E.O.P.

WAYNE BAUER
STATE OF WASHINGTON
23240
REGISTERED PROFESSIONAL ENGINEER
EXPIRES 4/25/04

W&H PACIFIC
9755 SW Barnes Road
Suite 300
Portland, Oregon 97225
(503)528-0455
(503)528-0775 Fax
whpacific.com

proud past, promising future
CLARK COUNTY
WASHINGTON

4-0466-0801
T119INT5.DWG

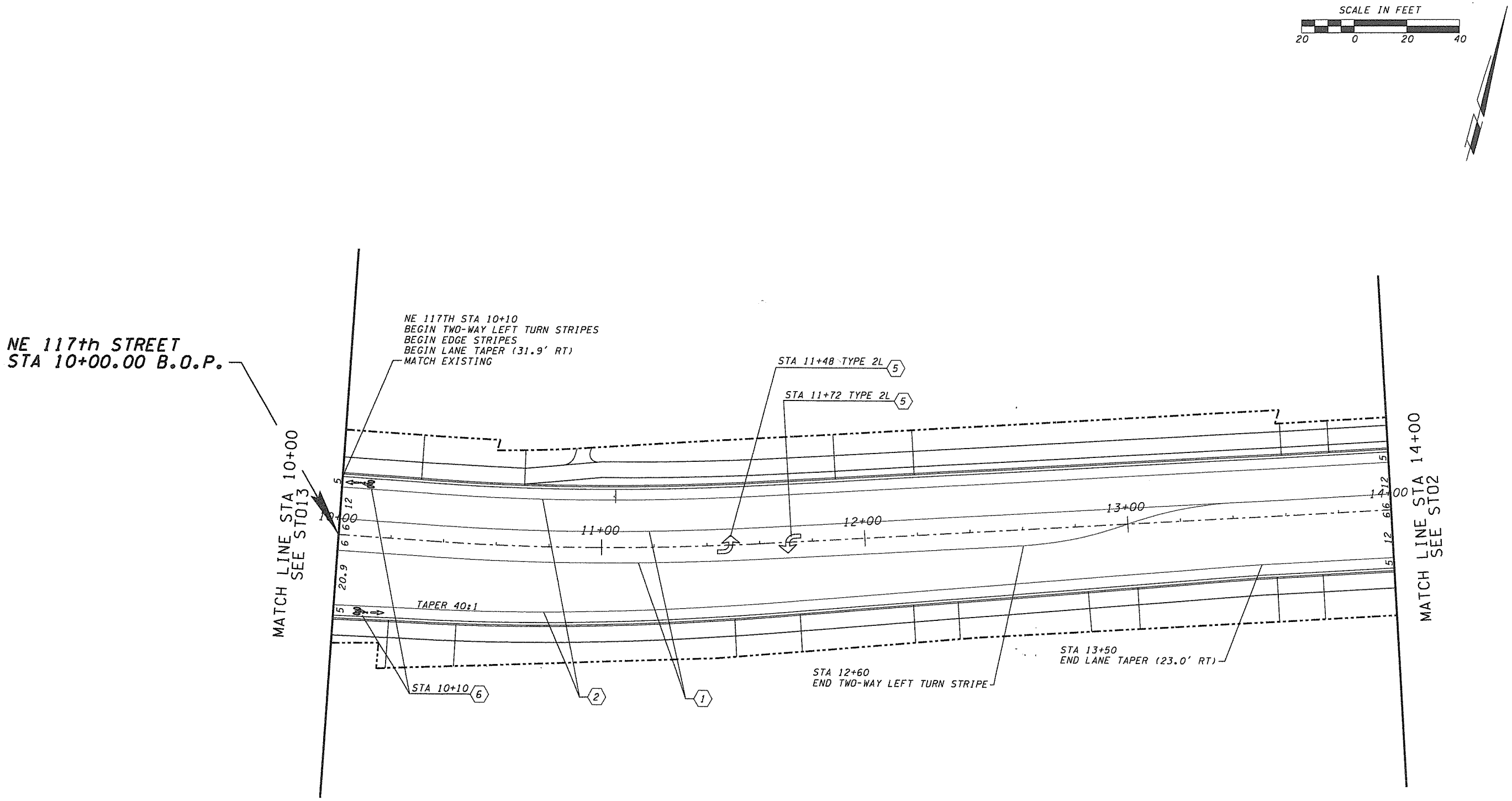

GENERAL NOTES:

1. TWO-WAY LEFT TURN STRIPE (YELLOW) 4"
2. WHITE EDGE STRIPE 4"
3. WIDE LINE (8" WIDE)
4. WIDE SKIP LINE(8" WIDE) WITH RPM's
5. TRAFFIC ARROWS TYPE 2 L/R (WHITE)
6. BICYCLE LANE SYMBOL (WHITE)
7. STOP BAR (WHITE)
8. CROSSWALK STRIPES (WHITE)

SIGN REMOVAL, RELOCATION, AND ADDITIONS TO BE DONE BY CCPW TRAFFIC DEPARTMENT.

NOTE:

1.) The striping and pavement marking removal process shall conform to 2004 WSDOT "Standard Specifications for Road, Bridge and Municipal Construction" section 8-22.3(6). The County's accepted practice of removal of existing painted pavement marking is by shot blasting. All other markings are removed by grinding. The contractor shall have a written approval by the engineer for any other method of removal.

2.) The contractor shall maintain existing permanent signing in accordance with 2004 WSDOT "Standard Specifications for Road, Bridge and Municipal Construction" section 1-07.23(1).

3.) The contractor shall provide temporary pavement markings in accordance with 2004 WSDOT "Standard Specifications for Road, Bridge and Municipal Construction" section 8.23.

4.) All new signing, striping and pavement markings, including relocation of existing signs to the final location, will be performed by Clark County Public Works.

DESIGNED ATH/KAM
DRAWN CRB
CRP 320322
HOR. 1" = 20'
VERT. 1" = 5'
DATE 9/11/02
DWG: ST01
SHEET 71 OF 78

CALL 48 HOURS BEFORE YOU DIG
1-800-553-4344
"It's the Law"
NORTHWEST UTILITIES NOTIFICATION CENTER

DON B. OWINGS
STATE OF WASHINGTON
PROFESSIONAL ENGINEER
EXPIRES SEPT. 25, 2004

DESIGN & ENGINEERING DIVISION
DESIGN SECTION

NE 117th STREET
SIGNING AND STRIPING PLAN

proud past, promising future
CLARK COUNTY
WASHINGTON

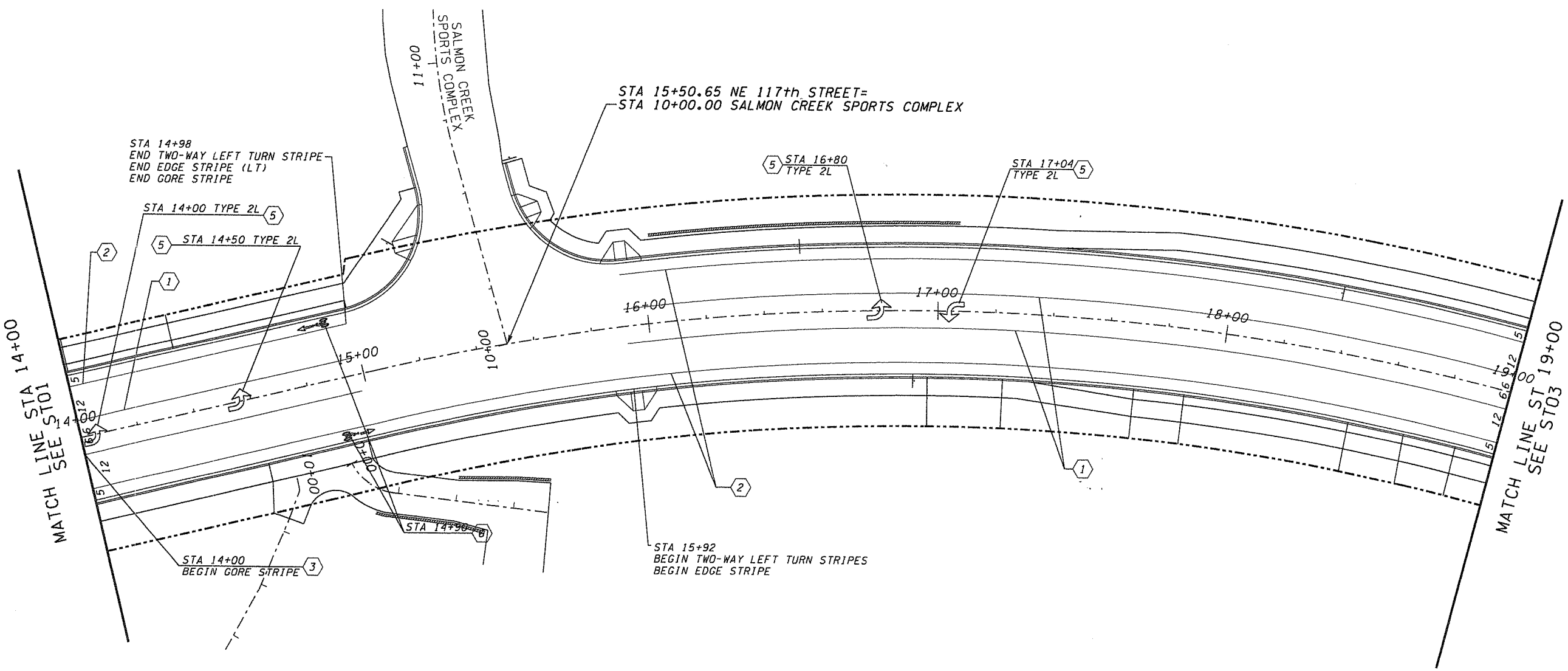

GENERAL NOTES:

1. TWO-WAY LEFT TURN STRIPE (YELLOW) 4"
2. WHITE EDGE STRIPE 4"
3. WIDE LINE (8" WIDE)
4. WIDE SKIP LINE(8" WIDE) WITH RPM's
5. TRAFFIC ARROWS TYPE 2 L/R (WHITE)
6. BICYCLE LANE SYMBOL (WHITE)
7. STOP BAR (WHITE)
8. CROSSWALK STRIPES (WHITE)

SIGN REMOVAL, RELOCATION, AND ADDITIONS TO BE DONE BY CCPW TRAFFIC DEPARTMENT.

NOTE:

1.) The striping and pavement marking removal process shall conform to 2004 WSDOT "Standard Specifications for Road, Bridge and Municipal Construction" section 8-22.3(6). The County's accepted practice of removal of existing painted pavement marking is by shot blasting. All other markings are removed by grinding. The contractor shall have a written approval by the engineer for any other method of removal.

2.) The contractor shall maintain existing permanent signing in accordance with 2004 WSDOT "Standard Specifications for Road, Bridge and Municipal Construction" section 1-07.23(1).

3.) The contractor shall provide temporary pavement markings in accordance with 2004 WSDOT "Standard Specifications for Road, Bridge and Municipal Construction" section 8.23.

4.) All new signing, striping and pavement markings, including relocation of existing signs to the final location, will be performed by Clark County Public Works.

DESIGNED	ATH/KAM
DRAWN	CRB
CRP	320322
HOR.	1" = 20'
VERT.	1" = 5'
DATE	11/27/03
DWG:	ST02
SHEET	72 OF 78

CALL 48 HOURS BEFORE YOU DIG
1-800-553-4344
"It's the Law"
NORTHWEST UTILITIES NOTIFICATION CENTER

DON B. OWINGS
STATE OF WASHINGTON
EXPIRES SEPT. 25, 2004

DESIGN & ENGINEERING DIVISION
DESIGN SECTION

NE 117th STREET
SIGNING AND STRIPING PLAN

proud past, promising future

CLARK COUNTY
WASHINGTON

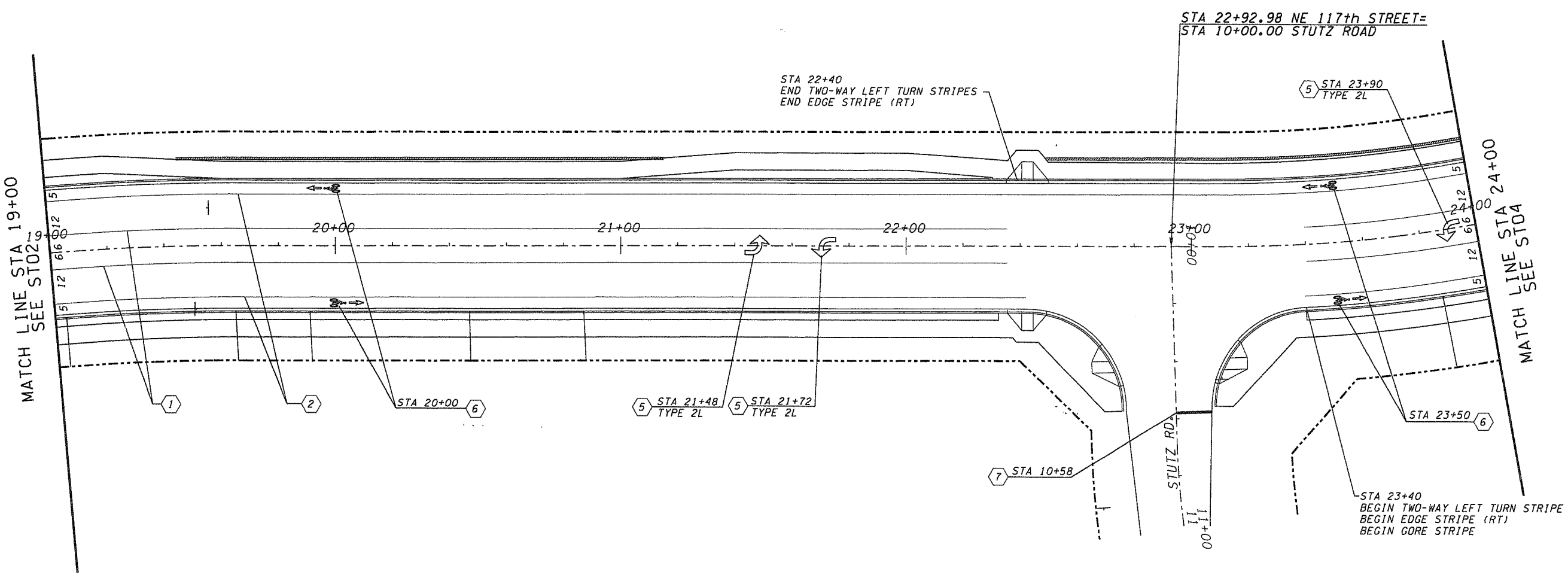

GENERAL NOTES:

1. TWO-WAY LEFT TURN STRIPE (YELLOW) 4"
2. WHITE EDGE STRIPE 4"
3. WIDE LINE (8" WIDE)
4. WIDE SKIP LINE(8" WIDE) WITH RPM's
5. TRAFFIC ARROWS TYPE 2 L/R (WHITE)
6. BICYCLE LANE SYMBOL (WHITE)
7. STOP BAR (WHITE)
8. CROSSWALK STRIPES (WHITE)

SIGN REMOVAL, RELOCATION, AND ADDITIONS TO BE DONE BY CCPW TRAFFIC DEPARTMENT.

NOTE:

1.) The striping and pavement marking removal process shall conform to 2004 WSDOT "Standard Specifications for Road, Bridge and Municipal Construction" section 8-22.3(6). The County's accepted practice of removal of existing painted pavement marking is by shot blasting. All other markings are removed by grinding. The contractor shall have a written approval by the engineer for any other method of removal.

2.) The contractor shall maintain existing permanent signing in accordance with 2004 WSDOT "Standard Specifications for Road, Bridge and Municipal Construction" section 1-07.23(1).

3.) The contractor shall provide temporary pavement markings in accordance with 2004 WSDOT "Standard Specifications for Road, Bridge and Municipal Construction" section 8.23.

4.) All new signing, striping and pavement markings, including relocation of existing signs to the final location, will be performed by Clark County Public Works.

DESIGNED	ATH/KAM
DRAWN	CRB
CRP	320322
HOR.	1" = 20'
VERT.	1" = 5'
DATE	11/27/03
DWG:	ST03
SHEET	73 OF 78

CALL 48 HOURS BEFORE YOU DIG
1-800-553-4344
"It's the Law"
NORTHWEST UTILITIES NOTIFICATION CENTER

DONALD B. OWINGS
STATE OF WASHINGTON
EXPIRES SEPT. 25, 2004

DESIGN & ENGINEERING DIVISION
DESIGN SECTION

NE 117th STREET
SIGNING AND STRIPING PLAN

proud past, promising future
CLARK COUNTY
WASHINGTON

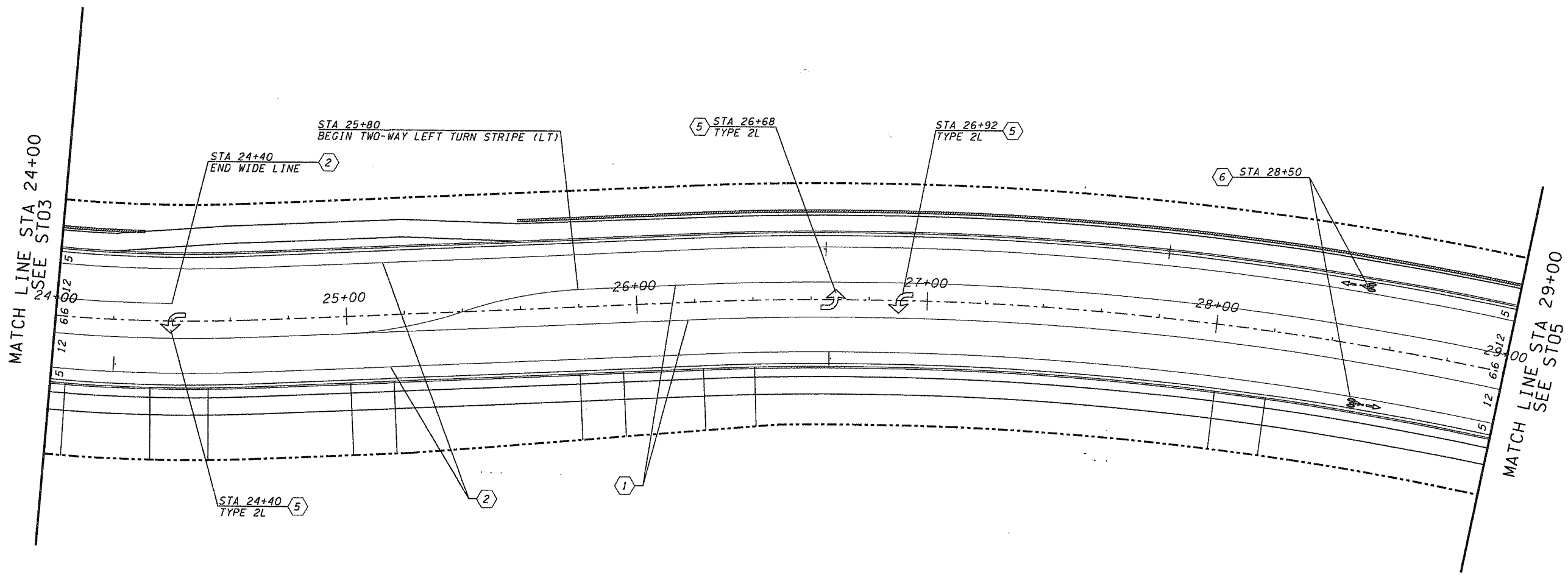

GENERAL NOTES:

1. TWO-WAY LEFT TURN STRIPE (YELLOW) 4"
2. WHITE EDGE STRIPE 4"
3. WIDE LINE (8" WIDE)
4. WIDE SKIP LINE(8" WIDE) WITH RPM's
5. TRAFFIC ARROWS TYPE 2 L/R (WHITE)
6. BICYCLE LANE SYMBOL (WHITE)
7. STOP BAR (WHITE)
8. CROSSWALK STRIPES (WHITE)

SIGN REMOVAL, RELOCATION, AND ADDITIONS TO BE DONE BY CCPW TRAFFIC DEPARTMENT.

NOTE:

1.) The striping and pavement marking removal process shall conform to 2004 WSDOT "Standard Specifications for Road, Bridge and Municipal Construction" section 8-22.3(6). The County's accepted practice of removal of existing painted pavement marking is by shot blasting. All other markings are removed by grinding. The contractor shall have a written approval by the engineer for any other method of removal.

2.) The contractor shall maintain existing permanent signing in accordance with 2004 WSDOT "Standard Specifications for Road, Bridge and Municipal Construction" section 1-07.23(1).

3.) The contractor shall provide temporary pavement markings in accordance with 2004 WSDOT "Standard Specifications for Road, Bridge and Municipal Construction" section 8.23.

4.) All new signing, striping and pavement markings, including relocation of existing signs to the final location, will be performed by Clark County Public Works.

DESIGNED	ATH/KAM
DRAWN	CRB
CRP	320322
HOR.	1" = 20'
VERT.	1" = 5'
DATE	11/21/03
DWG:	ST04
SHEET	74 OF 78

CALL 48 HOURS BEFORE YOU DIG
1-800-553-4344
"It's the Law"
NORTHWEST UTILITIES NOTIFICATION CENTER

DON B. OWINGS
STATE OF WASHINGTON
PROFESSIONAL ENGINEER
EXPIRES SEPT. 25, 2004

DESIGN & ENGINEERING DIVISION
DESIGN SECTION

NE 117th STREET
SIGNING AND STRIPING PLAN

proud past, promising future
CLARK COUNTY
WASHINGTON

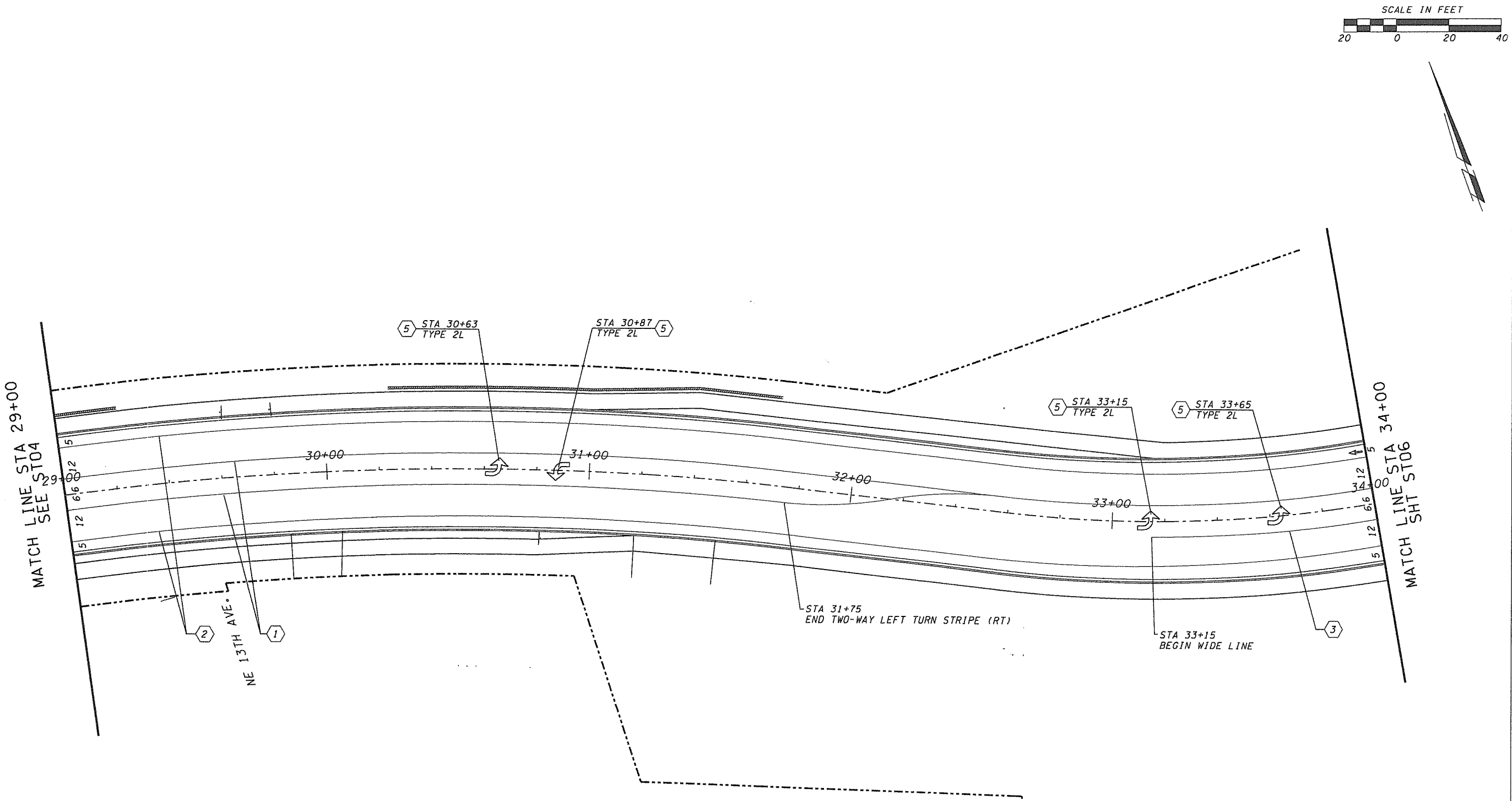

GENERAL NOTES:

1. TWO-WAY LEFT TURN STRIPE (YELLOW) 4"
2. WHITE EDGE STRIPE 4"
3. WIDE LINE (8" WIDE)
4. WIDE SKIP LINE(8" WIDE) WITH RPM's
5. TRAFFIC ARROWS TYPE 2 L/R (WHITE)
6. BICYCLE LANE SYMBOL (WHITE)
7. STOP BAR (WHITE)
8. CROSSWALK STRIPES (WHITE)

SIGN REMOVAL, RELOCATION, AND ADDITIONS TO BE DONE BY CCPW TRAFFIC DEPARTMENT.

NOTE:

1.) The striping and pavement marking removal process shall conform to 2004 WSDOT "Standard Specifications for Road, Bridge and Municipal Construction" section 8-22.3(6). The County's accepted practice of removal of existing painted pavement marking is by shot blasting. All other markings are removed by grinding. The contractor shall have a written approval by the engineer for any other method of removal.

2.) The contractor shall maintain existing permanent signing in accordance with 2004 WSDOT "Standard Specifications for Road, Bridge and Municipal Construction" section 1-07.23(1).

3.) The contractor shall provide temporary pavement markings in accordance with 2004 WSDOT "Standard Specifications for Road, Bridge and Municipal Construction" section 8.23.

4.) All new signing, striping and pavement markings, including relocation of existing signs to the final location, will be performed by Clark County Public Works.

DESIGNED ATH/KAM
DRAWN CRB
CRP 320322
HOR. 1" = 20'
VERT. 1" = 5'
DATE 11/27/03
DWG: ST05
SHEET 75 OF 78

CALL 48 HOURS BEFORE YOU DIG
1-800-553-4344
"It's the Law"
NORTHWEST UTILITIES NOTIFICATION CENTER

RON B. OWINGS
STATE OF WASHINGTON
PROFESSIONAL ENGINEER
EXPIRES SEPT. 25, 2004

DESIGN & ENGINEERING DIVISION
DESIGN SECTION

NE 117th STREET
SIGNING AND STRIPING PLAN

proud past, promising future
CLARK COUNTY
WASHINGTON

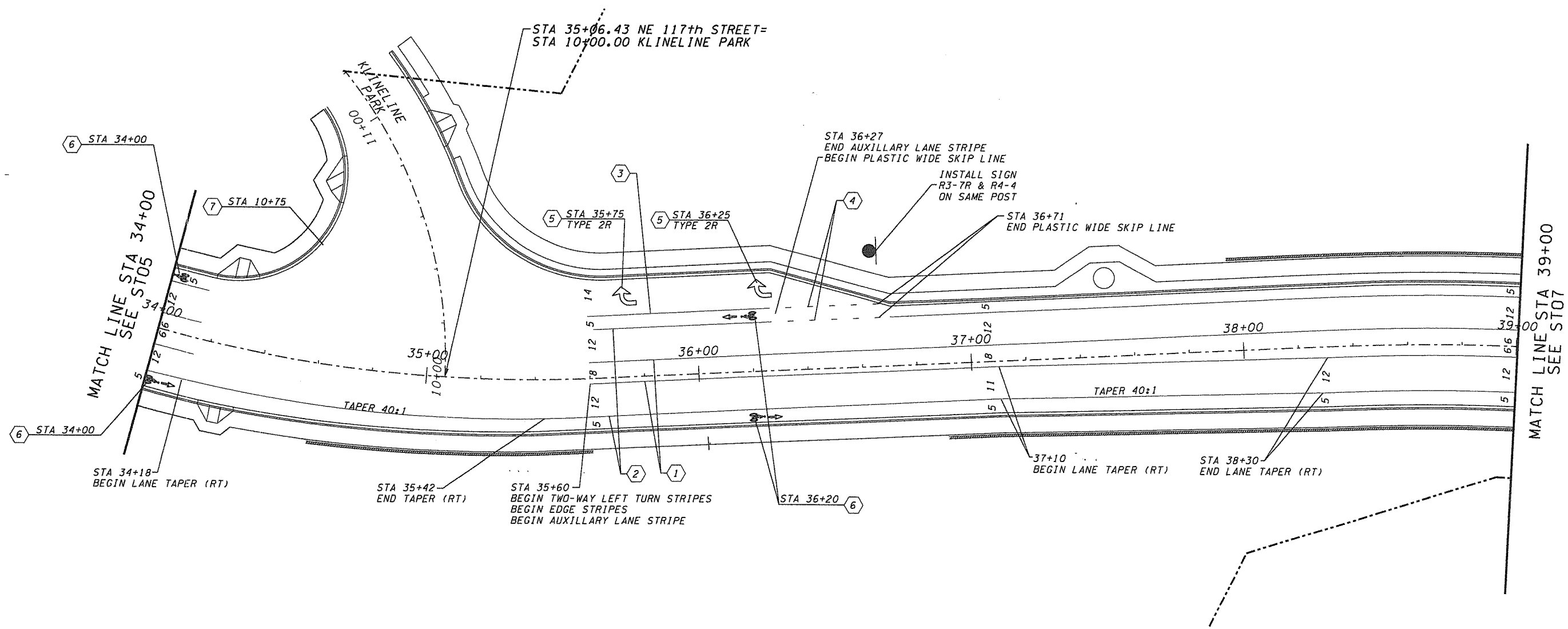

GENERAL NOTES:

1. TWO-WAY LEFT TURN STRIPE (YELLOW) 4"
2. WHITE EDGE STRIPE 4"
3. WIDE LINE (8" WIDE)
4. WIDE SKIP LINE(8" WIDE) WITH RPM's
5. TRAFFIC ARROWS TYPE 2 L/R (WHITE)
6. BICYCLE LANE SYMBOL (WHITE)
7. STOP BAR (WHITE)
8. CROSSWALK STRIPES (WHITE)

SIGN REMOVAL, RELOCATION, AND ADDITIONS TO BE DONE BY CCPW TRAFFIC DEPARTMENT.

NOTE:

1.) The striping and pavement marking removal process shall conform to 2004 WSDOT "Standard Specifications for Road, Bridge and Municipal Construction" section 8-22.3(6). The County's accepted practice of removal of existing painted pavement marking is by shot blasting. All other markings are removed by grinding. The contractor shall have a written approval by the engineer for any other method of removal.

2.) The contractor shall maintain existing permanent signing in accordance with 2004 WSDOT "Standard Specifications for Road, Bridge and Municipal Construction" section 1-07.23(1).

3.) The contractor shall provide temporary pavement markings in accordance with 2004 WSDOT "Standard Specifications for Road, Bridge and Municipal Construction" section 8.23.

4.) All new signing, striping and pavement markings, including relocation of existing signs to the final location, will be performed by Clark County Public Works.

DESIGNED	ATH/KAM
DRAWN	CRB
CRP	320322
HOR.	1" = 20'
VERT.	1" = 5'
DATE	11/27/03
DWG:	ST06
SHEET	76 OF 78

CALL 48 HOURS BEFORE YOU DIG
1-800-553-4344
"It's the Law"
NORTHWEST UTILITIES NOTIFICATION CENTER

DON B. DWINGER
STATE OF WASHINGTON
REGISTERED PROFESSIONAL ENGINEER
EXPIRES SEPT. 25, 2007

DESIGN & ENGINEERING DIVISION
DESIGN SECTION

NE 117th STREET
SIGNING AND STRIPING PLAN

proud past, promising future
CLARK COUNTY
WASHINGTON

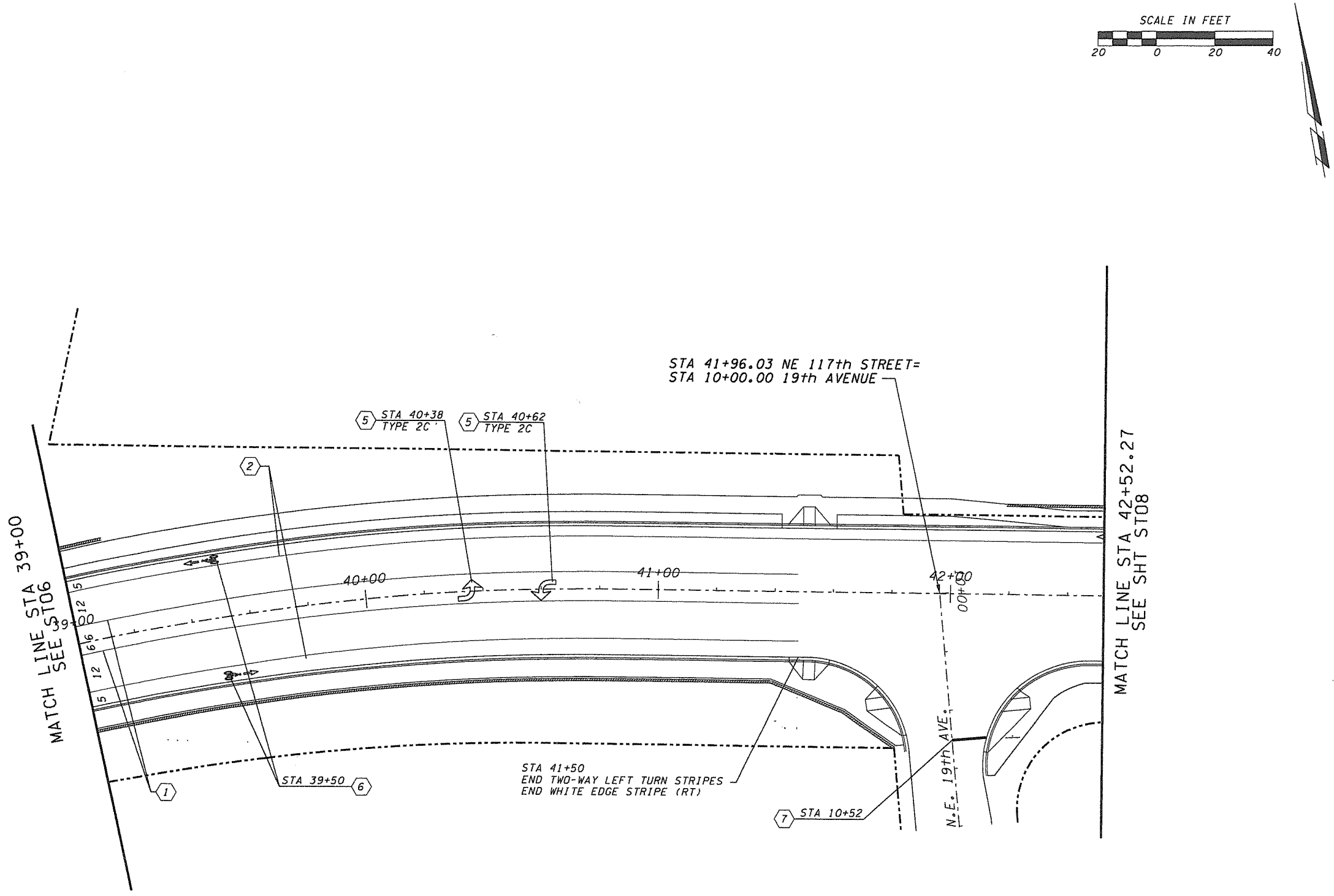

GENERAL NOTES:

1. TWO-WAY LEFT TURN STRIPE (YELLOW) 4"
2. WHITE EDGE STRIPE 4"
3. WIDE LINE (8" WIDE)
4. WIDE SKIP LINE(8" WIDE) WITH RPM's
5. TRAFFIC ARROWS TYPE 2 L/R (WHITE)
6. BICYCLE LANE SYMBOL (WHITE)
7. STOP BAR (WHITE)
8. CROSSWALK STRIPES (WHITE)

SIGN REMOVAL, RELOCATION, AND ADDITIONS TO BE DONE BY CCPW TRAFFIC DEPARTMENT.

NOTE:

1.) The striping and pavement marking removal process shall conform to 2004 WSDOT "Standard Specifications for Road, Bridge and Municipal Construction" section 8-22.3(6). The County's accepted practice of removal of existing painted pavement marking is by shot blasting. All other markings are removed by grinding. The contractor shall have a written approval by the engineer for any other method of removal.

2.) The contractor shall maintain existing permanent signing in accordance with 2004 WSDOT "Standard Specifications for Road, Bridge and Municipal Construction" section 1-07.23(1).

3.) The contractor shall provide temporary pavement markings in accordance with 2004 WSDOT "Standard Specifications for Road, Bridge and Municipal Construction" section 8.23.

4.) All new signing, striping and pavement markings, including relocation of existing signs to the final location, will be performed by Clark County Public Works.

DESIGNED	ATH/KAM
DRAWN	CRB
CRP	320322
HOR.	1" = 20'
VERT.	1" = 5'
DATE	11/27/03
DWG:	ST07
SHEET	77 OF 78

CALL 48 HOURS BEFORE YOU DIG
1-800-553-4344
"It's the Law"
NORTHWEST UTILITIES NOTIFICATION CENTER

DON B. OWINGS
STATE OF WASHINGTON
REGISTERED PROFESSIONAL ENGINEER
EXPIRES SEPT. 25, 2004

DESIGN & ENGINEERING DIVISION
DESIGN SECTION

NE 117th STREET
SIGNING AND STRIPING PLAN

proud past, promising future
CLARK COUNTY
WASHINGTON

CRP NO. 320322

NOTE: STRIPING DESIGN AT KLINELINE RD VICINITY BASED ON DESIGN SHOWN UNDER 117TH/119TH PROJECT.

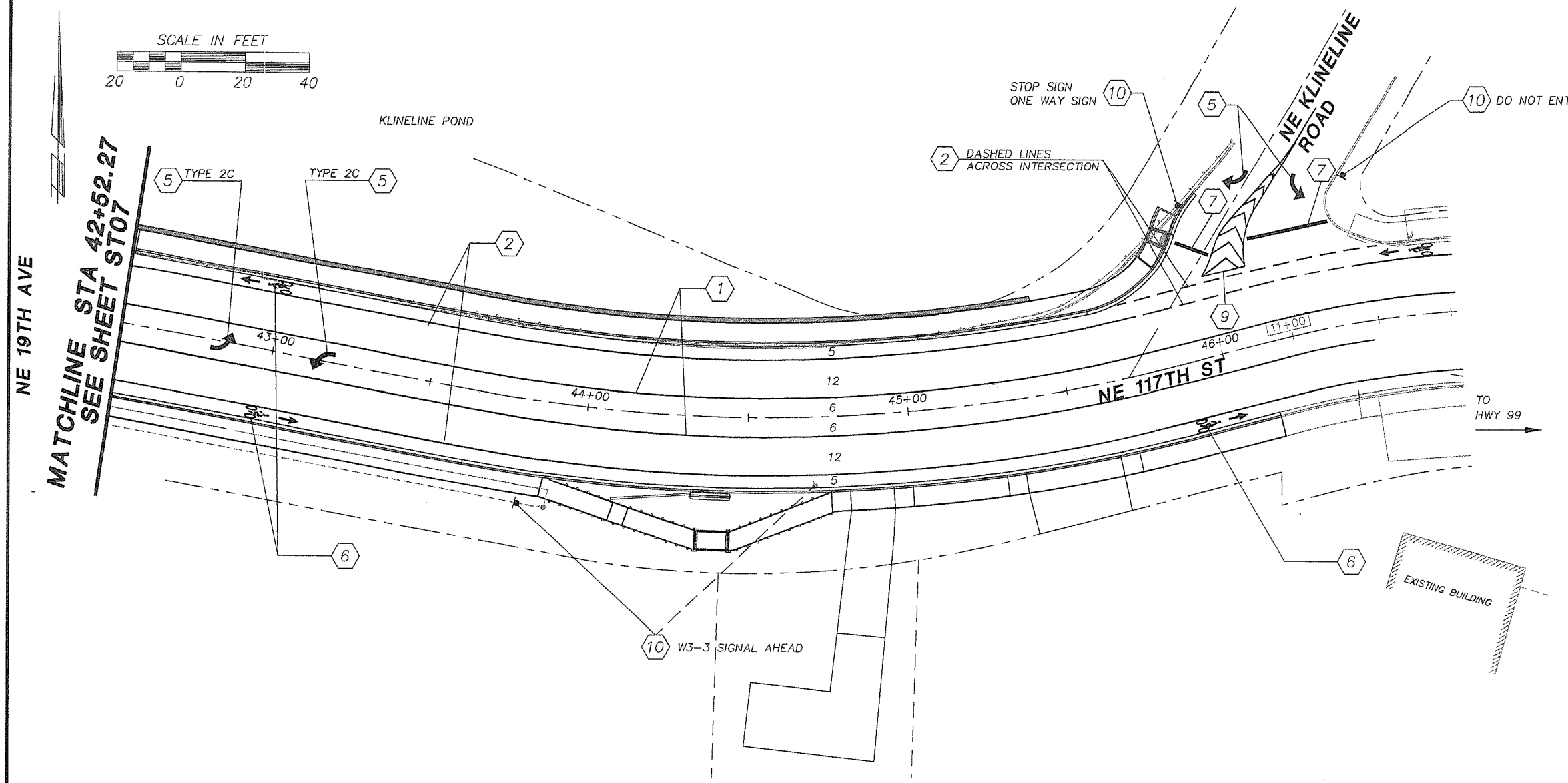

NOT IN CONTRACT:
SIGNING AND STRIPING TO BE DONE
BY CLARK COUNTY PUBLIC WORKS

GENERAL NOTES:

1. TWO-WAY LEFT TURN STRIPE (YELLOW) 4"
2. WHITE EDGE STRIPE 4"
3. WIDE LINE (8" WIDE)
4. WIDE SKIP LINE (8" WIDE) WITH RPM'S
5. TRAFFIC ARROWS TYPE 2 L/R (WHITE)
6. BICYCLE LANE SYMBOL (WHITE)
7. STOP BAR (WHITE)
8. CROSSWALK STRIPES (WHITE)
9. WHITE GORE STRIPE 4"
   COORDINATE FIELD LAYOUT WITH ENGINEER
10. RELOCATE EXISTING SIGN AND POST
    LOCATION TO BE DETERMIND BY ENGINEER.
    SIGN REMOVAL, RELOCATION AND ADDITIONS
    TO BE DONE BY CCPW TRAFFIC DEPARTMENT

4-0466-0801

T119ST08.DWG

DESIGNED	AJL
DRAWN	KLB
CRP	320322
HOR.	1"=20'
VERT.	1"=20'
DATE	03-26-04
DWG.	ST08
SHEET	78 OF 78

CALL 48 HOURS BEFORE YOU DIG 1-800-553-4344

"It's the Law" CLARK COUNTY UTILITIES COORDINATING COUNCIL

DESIGN & ENGINEERING DIVISION
DESIGN SECTION

NE 117TH STREET
SIGNING & STRIPING PLAN
FROM STA 42+52 TO E.O.P.

STATE OF WASHINGTON
WAYNE BAUER
23240
REGISTERED PROFESSIONAL ENGINEER
EXPIRES 4/29/04

W&H PACIFIC
9755 SW Barnes Road
Suite 300
Portland, Oregon 97225
(503)626-0455
(503)626-0795 Fax
whpacific.com

proud past, promising future
CLARK COUNTY
WASHINGTON

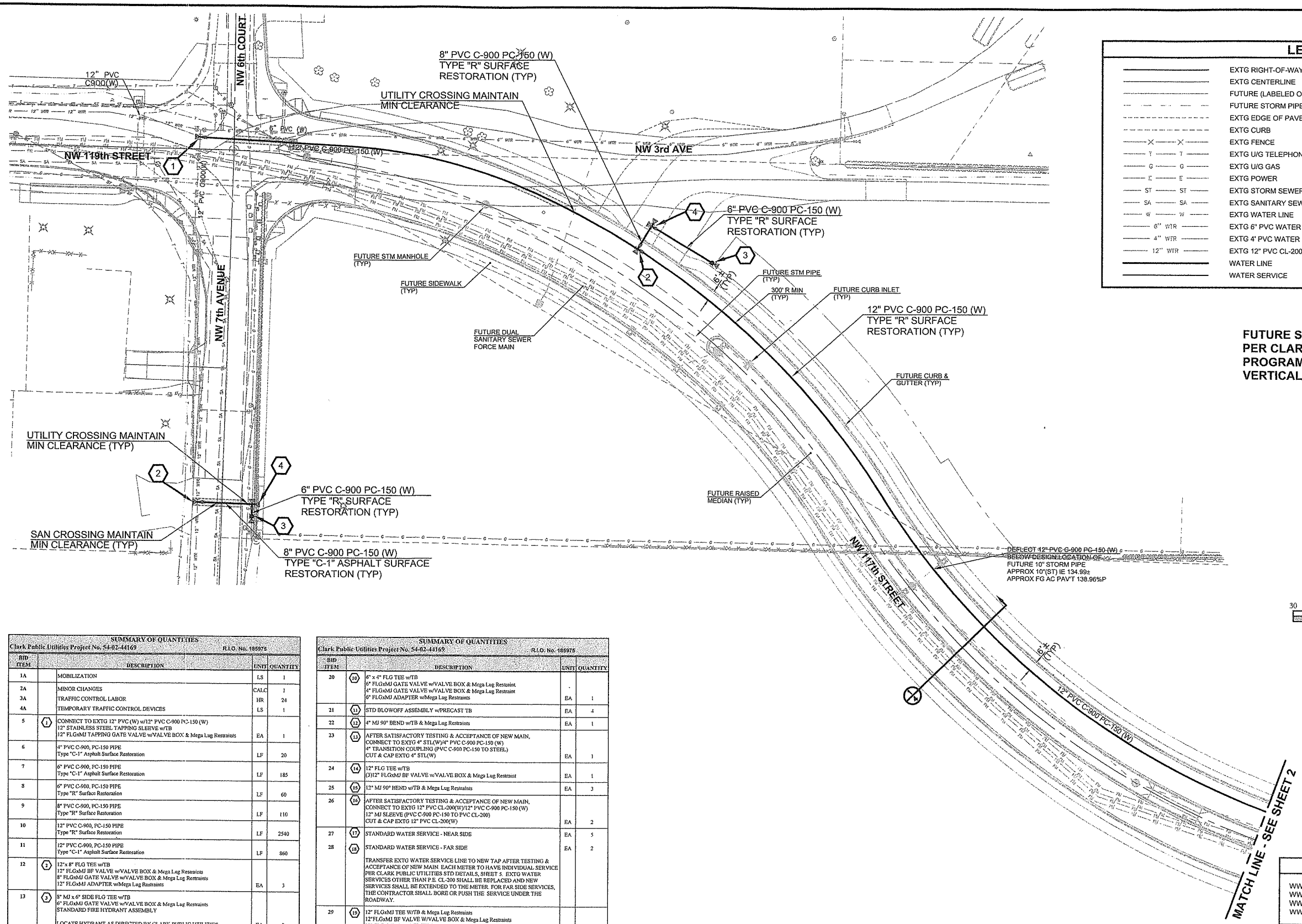

LEGEND

EXTG RIGHT-OF-WAY	EXTG CATCH BASIN
EXTG CENTERLINE	EXTG STORM MH
FUTURE (LABELED ON PLANS)	EXTG SAN MH
FUTURE STORM PIPE	EXTG FIRE HYDRANT
EXTG EDGE OF PAVEMENT	EXTG WATER VALVE
EXTG CURB	EXTG TELEPHONE RISER
EXTG FENCE	EXTG POWER POLE
EXTG U/G TELEPHONE	EXTG ELECTRICAL RISER
EXTG U/G GAS	EXTG SIGN
EXTG POWER	EXTG MAILBOX
EXTG STORM SEWER	FUTURE STORM MH
EXTG SANITARY SEWER	FUTURE CURB INLET
EXTG WATER LINE	WATER VALVE
EXTG 6" PVC WATER LINE	WATER METER
EXTG 4" PVC WATER LINE	FIRE HYDRANT
EXTG 12" PVC CL-200 (W)	PIPE BEND
WATER LINE	THRUST BLOCK
WATER SERVICE	ASSEMBLY REFERENCE #

FUTURE STREET & STORM IMPROVEMENTS PER PER CLARK COUNTY CAPITAL IMPROVEMENTS PROGRAM - COUNTY ROAD PROJECT #380122. VERTICAL DATA PROVIDED BY CLARK COUNTY.

Scale 1" = 30'

30 15 0 30 60 90

NOTE:
WHEN AN EXISTING PIPE IS CUT AND NOT RECONNECTED, THE CUT ENDS SHALL BE CAPPED OR PLUGGED, AS DIRECTED BY THE INSPECTOR. THIS SHALL BE INCIDENTAL TO THE SCOPE OF WORK AND CONTRACT PRICE.

REFERENCE SYMBOLS

1 / 1 — SECTION OR DETAIL NUMBER / SHEET ON WHICH SECTION OR DETAIL OCCURS

SHEET INDEX

WW-1. WATER SYSTEM PLAN
WW-2. WATER SYSTEM PLAN
WW-3. WATER SYSTEM PLAN
WW-4. WATER SYSTEM PLAN

SUMMARY OF QUANTITIES

Clark Public Utilities Project No. 54-02-44169 R.I.O. No. 185975

BID ITEM		DESCRIPTION	UNIT	QUANTITY
1A		MOBILIZATION	LS	1
2A		MINOR CHANGES	CALC	1
3A		TRAFFIC CONTROL LABOR	HR	24
4A		TEMPORARY TRAFFIC CONTROL DEVICES	LS	1
5	1	CONNECT TO EXTG 12" PVC (W) w/12" PVC C-900 PC-150 (W) 12" STAINLESS STEEL TAPPING SLEEVE w/TB 12" FLGxMJ TAPPING GATE VALVE w/VALVE BOX & Mega Lug Restraints	EA	1
6		4" PVC C-900, PC-150 PIPE Type "C-1" Asphalt Surface Restoration	LF	20
7		6" PVC C-900, PC-150 PIPE Type "C-1" Asphalt Surface Restoration	LF	185
8		6" PVC C-900, PC-150 PIPE Type "R" Surface Restoration	LF	60
9		8" PVC C-900, PC-150 PIPE Type "R" Surface Restoration	LF	110
10		12" PVC C-900, PC-150 PIPE Type "R" Surface Restoration	LF	2540
11		12" PVC C-900, PC-150 PIPE Type "C-1" Asphalt Surface Restoration	LF	860
12	2	12"x 8" FLG TEE w/TB 12" FLGxMJ BF VALVE w/VALVE BOX & Mega Lug Restraints 8" FLGxMJ GATE VALVE w/VALVE BOX & Mega Lug Restraints 12" FLGxMJ ADAPTER w/Mega Lug Restraints	EA	3
13	3	8" MJ x 6" SIDE FLG TEE w/TB 6" FLGxMJ GATE VALVE w/VALVE BOX & Mega Lug Restraints STANDARD FIRE HYDRANT ASSEMBLY LOCATE HYDRANT AS DIRECTED BY CLARK PUBLIC UTILITIES	EA	3
14	4	CAP & BLOCK 8" PVC C-900, PC-150(W)	EA	3
15	5	12" MJ 22½° BEND w/TB & Mega Lug Restraints	EA	2
16	6	12" FLG CROSS 12" FLGxMJ BF VALVE w/VALVE BOX & Mega Lug Restraint 12" x 6" FLGxMJ REDUCER w/Mega Lug Restraint 12" FLGxMJ ADAPTER w/Mega Lug Restraints 6" FLGxMJ GATE VALVE w/VALVE BOX & Mega Lug Restraint 12"x6" FLG REDUCER	EA	1
17	7	AFTER SATISFACTORY TESTING & ACCEPTANCE (IF NEW MAIN, CONNECT TO EXTG 6" PVC(W)/6" PVC C-900 PC-150 (W) 6" MJ SLEEVE (PVC C-900 PC-150 TO PVC) CUT & CAP EXTG 6" PVC(W)	EA	2
18	8	12" MJ 45° BEND w/TB & Mega Lug Restraints	EA	3
19	9	12" x 6" FLG TEE w/TB 12" FLGxMJ BF VALVE w/VALVE BOX & Mega Lug Restraint 6" FLGxMJ GATE VALVE w/VALVE BOX & Mega Lug Restraint 12" FLGxMJ ADAPTER w/Mega Lug Restraints	EA	1

SUMMARY OF QUANTITIES

Clark Public Utilities Project No. 54-02-44169 R.I.O. No. 185975

BID ITEM		DESCRIPTION	UNIT	QUANTITY
20	10	6" x 4" FLG TEE w/TB 6" FLGxMJ GATE VALVE w/VALVE BOX & Mega Lug Restraint 4" FLGxMJ GATE VALVE w/VALVE BOX & Mega Lug Restraint 6" FLGxMJ ADAPTER w/Mega Lug Restraints	EA	1
21	11	STD BLOWOFF ASSEMBLY w/PRECAST TB	EA	4
22	12	4" MJ 90° BEND w/TB & Mega Lug Restraints	EA	1
23	13	AFTER SATISFACTORY TESTING & ACCEPTANCE OF NEW MAIN, CONNECT TO EXTG 4" STL(W)/4" PVC C-900 PC-150 (W) 4" TRANSITION COUPLING (PVC C-900 PC-150 TO STEEL) CUT & CAP EXTG 4" STL(W)	EA	1
24	14	12" FLG TEE w/TB (3)12" FLGxMJ BF VALVE w/VALVE BOX & Mega Lug Restraint	EA	1
25	15	12" MJ 90° BEND w/TB & Mega Lug Restraints	EA	3
26	16	AFTER SATISFACTORY TESTING & ACCEPTANCE OF NEW MAIN, CONNECT TO EXTG 12" PVC CL-200(W)/12" PVC C-900 PC-150 (W) 12" MJ SLEEVE (PVC C-900 PC-150 TO PVC CL-200) CUT & CAP EXTG 12" PVC CL-200(W)	EA	2
27	17	STANDARD WATER SERVICE - NEAR SIDE	EA	5
28	18	STANDARD WATER SERVICE - FAR SIDE TRANSFER EXTG WATER SERVICE LINE TO NEW TAP AFTER TESTING & ACCEPTANCE OF NEW MAIN. EACH METER TO HAVE INDIVIDUAL SERVICE PER CLARK PUBLIC UTILITIES STD DETAILS, SHEET 5. EXTG WATER SERVICES OTHER THAN P.E. CL-200 SHALL BE REPLACED AND NEW SERVICES SHALL BE EXTENDED TO THE METER. FOR FAR SIDE SERVICES, THE CONTRACTOR SHALL BORE OR PUSH THE SERVICE UNDER THE ROADWAY.	EA	2
29	19	12" FLGxMJ TEE W/TB & Mega Lug Restraints 12"FLGxMJ BF VALVE W/VALVE BOX & Mega Lug Restraints 12" FLGxMJ ADAPTER W/Mega Lug Restraints	EA	1
30	20	6" MJ 45° BENDS W/TB & Mega Lug Restraints	EA	4
31	21	AFTER SATISFACTORY TESTING & ACCEPTANCE OF NEW MAIN, REMOVE BLOW-OFF ASSEMBLIES AND CONNECT TO 12" PVC C-900, PC-150(W) 74 LF 12" PVC C-900, PC-150(W) 12" 11 1/4° MJ BEND W/TB & MEGA LUG RESTRAINTS (2) 12" MJ SLEEVE (PVC C-900 TO PVC-C900) W/MEGA LUG RESTRAINTS EMERGENCY CONNECTION	EA	1

CLARK PUBLIC UTILITIES (WATER)

Approved _____ Date _____
Water Project #

No.	Revision	Date	By	App'd
A	PRELIMINARY – ISSUED FOR REVIEW		SJF	SGM

DESIGNED	SJF
DRAWN	SJF
CRP	380122
HOR.	1"=30'
VERT.	NA
DATE	OCT 2004
DWG:	
SHEET	WW-1 OF 4

CALL 48 HOURS BEFORE YOU DIG 1-800-553-4344 "It's the Law" NORTHWEST UTILITIES NOTIFICATION CENTER

SHAWN G. MOORE STATE OF WASHINGTON 36667 REGISTERED PROFESSIONAL ENGINEER 10/10/04
EXPIRES: APRIL 30, 2006

DESIGN & ENGINEERING DIVISION
DESIGN SECTION

NW 119TH / 117TH STREET
WATER SYSTEM PLAN

Proud past, promising future

CLARK COUNTY WASHINGTON

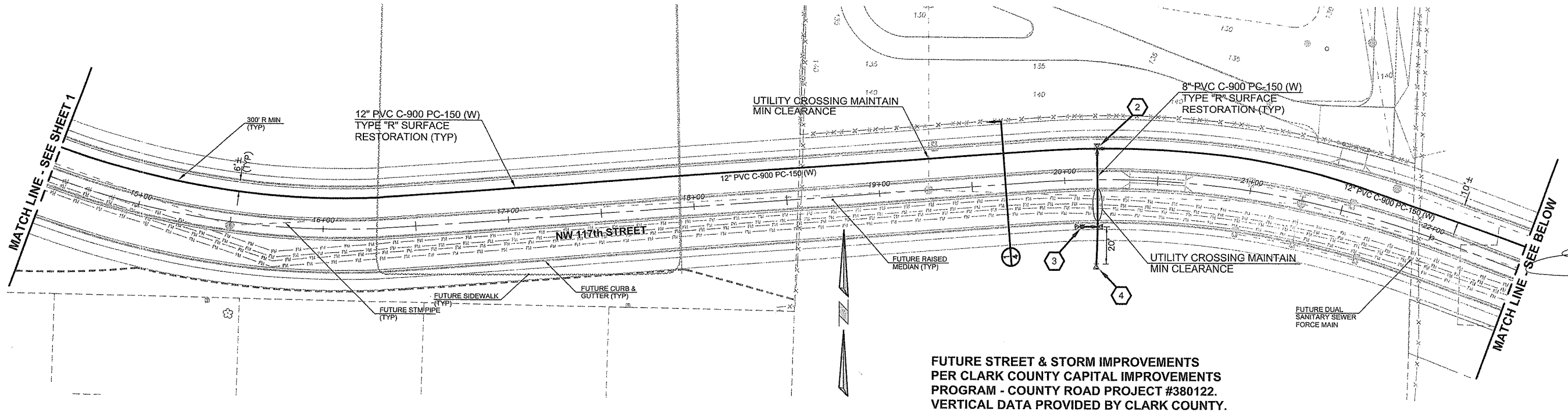

FUTURE STREET & STORM IMPROVEMENTS PER CLARK COUNTY CAPITAL IMPROVEMENTS PROGRAM - COUNTY ROAD PROJECT #380122. VERTICAL DATA PROVIDED BY CLARK COUNTY.

Scale 1" = 30'

30 15 0 30 60 90

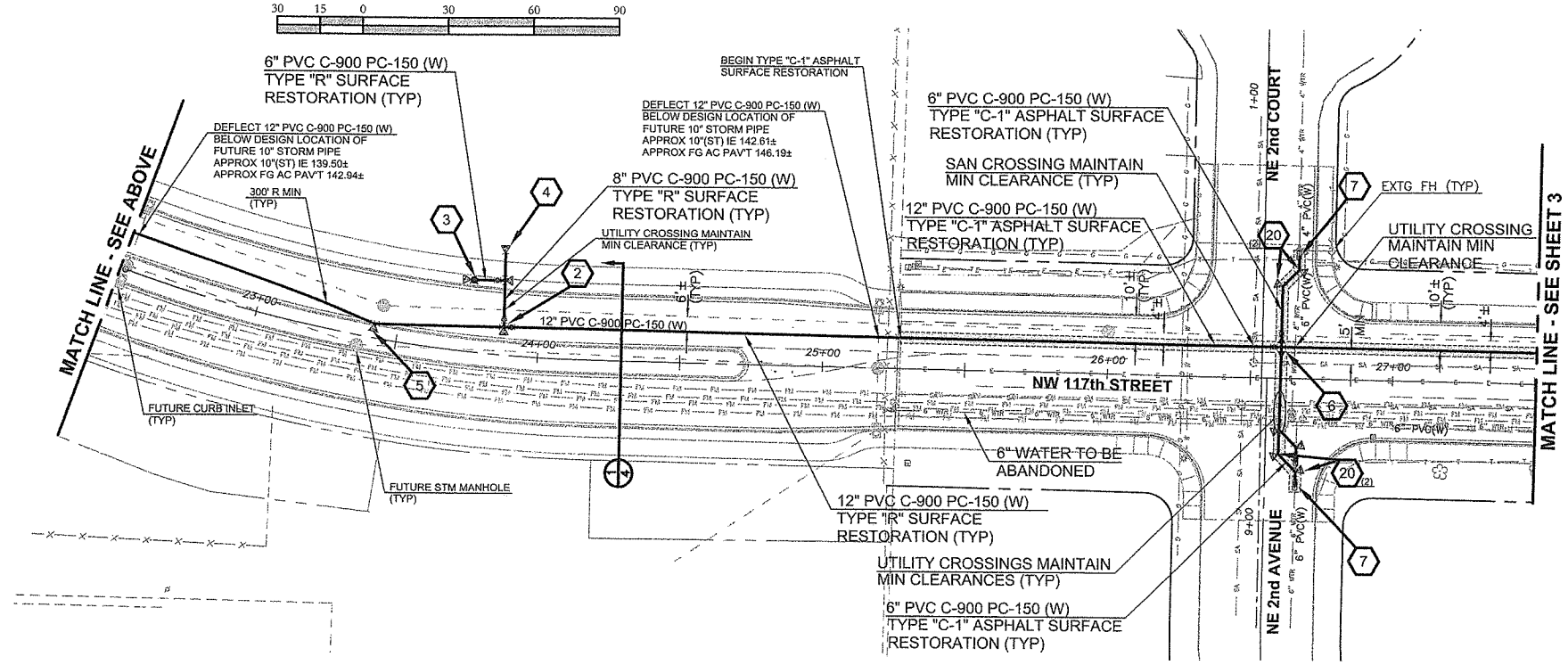

SUMMARY OF QUANTITIES Clark Public Utilities Project No. 54-02-44169 R.I.O. No. 105975				
BID ITEM		DESCRIPTION	UNIT	QUANTITY
1A		MOBILIZATION	LS	1
2A		MINOR CHANGES	CALC	1
3A		TRAFFIC CONTROL LABOR	HR	24
4A		TEMPORARY TRAFFIC CONTROL DEVICES	LS	1
5	1	CONNECT TO EXTG 12" PVC (W) w/12" PVC C-900 PC-150 (W) 12" STAINLESS STEEL TAPPING SLEEVE w/TB 12" FLGxMJ TAPPING GATE VALVE w/VALVE BOX & Mega Lug Restraints	EA	1
6		4" PVC C-900, PC-150 PIPE Type "C-1" Asphalt Surface Restoration	LF	20
7		6" PVC C-900, PC-150 PIPE Type "C-1" Asphalt Surface Restoration	LF	185
8		6" PVC C-900, PC-150 PIPE Type "R" Surface Restoration	LF	60
9		8" PVC C-900, PC-150 PIPE Type "R" Surface Restoration	LF	110
10		12" PVC C-900, PC-150 PIPE Type "R" Surface Restoration	LF	2540
11		12" PVC C-900, PC-150 PIPE Type "C-1" Asphalt Surface Restoration	LF	860
12	2	12"x 8" FLG TEE w/TB 12" FLGxMJ BF VALVE w/VALVE BOX & Mega Lug Restraints 8" FLGxMJ GATE VALVE w/VALVE BOX & Mega Lug Restraints 12" FLGxMJ ADAPTER w/Mega Lug Restraints	EA	3
13	3	8" MJ x 6" SIDE FLG TEE w/TB 6" FLGxMJ GATE VALVE w/VALVE BOX & Mega Lug Restraints STANDARD FIRE HYDRANT ASSEMBLY LOCATE HYDRANT AS DIRECTED BY CLARK PUBLIC UTILITIES	EA	3
14	4	CAP & BLOCK 8" PVC C-900, PC-150(W)	EA	3
15	5	12" MJ 22½° BEND w/TB & Mega Lug Restraints	EA	2
16	6	12" FLG CROSS 12" FLGxMJ BF VALVE w/VALVE BOX & Mega Lug Restraint 12" x 6" FLGxMJ REDUCER w/Mega Lug Restraint 12" FLGxMJ ADAPTER w/Mega Lug Restraints 6" FLGxMJ GATE VALVE w/VALVE BOX & Mega Lug Restraint 12"x6" FLG REDUCER	EA	1
17	7	AFTER SATISFACTORY TESTING & ACCEPTANCE OF NEW MAIN, CONNECT TO EXTG 6" PVC(W)@ PVC C-900 PC-150 (W) 6" MJ SLEEVE (PVC C-900 PC-150 TO PVC) CUT & CAP EXTG 6" PVC(W)	EA	2
18	8	12" MJ 45° BEND w/TB & Mega Lug Restraints	EA	3
19	9	12" x 6" FLG TEE w/TB 12" FLGxMJ BF VALVE w/VALVE BOX & Mega Lug Restraint 6" FLGxMJ GATE VALVE w/VALVE BOX & Mega Lug Restraint 12" FLGxMJ ADAPTER w/Mega Lug Restraints	EA	1

SUMMARY OF QUANTITIES Clark Public Utilities Project No. 54-02-44169 R.I.O. No. 105975				
BID ITEM		DESCRIPTION	UNIT	QUANTITY
20	10	6" x 4" FLG TEE w/TB 6" FLGxMJ GATE VALVE w/VALVE BOX & Mega Lug Restraint 4" FLGxMJ GATE VALVE w/VALVE BOX & Mega Lug Restraint 6" FLGxMJ ADAPTER w/Mega Lug Restraints	EA	1
21	11	STD BLOWOFF ASSEMBLY w/PRECAST TB	EA	4
22	12	4" MJ 90° BEND w/TB & Mega Lug Restraints	EA	1
23	13	AFTER SATISFACTORY TESTING & ACCEPTANCE OF NEW MAIN, CONNECT TO EXTG 4" STL(W)/4" PVC C-900 PC-150 (W) 4" TRANSITION COUPLING (PVC C-900 PC-150 TO STEEL) CUT & CAP EXTG 4" STL(W)	EA	1
24	14	12" FLG TEE w/TB (3)12" FLGxMJ BF VALVE w/VALVE BOX & Mega Lug Restraint	EA	1
25	15	12" MJ 90° BEND w/TB & Mega Lug Restraints	EA	3
26	16	AFTER SATISFACTORY TESTING & ACCEPTANCE OF NEW MAIN, CONNECT TO EXTG 12" PVC CL-200(W)/12" PVC C-900 PC-150 (W) 12" MJ SLEEVE (PVC C-900 PC-150 TO PVC CL-200) CUT & CAP EXTG 12" PVC CL-200(W)	EA	2
27	17	STANDARD WATER SERVICE - NEAR SIDE	EA	5
28	18	STANDARD WATER SERVICE - FAR SIDE TRANSFER EXTG WATER SERVICE LINE TO NEW TAP AFTER TESTING & ACCEPTANCE OF NEW MAIN. EACH METER TO HAVE INDIVIDUAL SERVICE PER CLARK PUBLIC UTILITIES STD DETAILS, SHEET 5 EXTG WATER SERVICES OTHER THAN P.E. CL-200 SHALL BE REPLACED AND NEW SERVICES SHALL BE EXTENDED TO THE METER. FOR FAR SIDE SERVICES, THE CONTRACTOR SHALL BORE OR PUSH THE SERVICE UNDER THE ROADWAY.	EA	2
29	19	12" FLGxMJ TEE W/TB & Mega Lug Restraints 12"FLGxMJ BF VALVE W/VALVE BOX & Mega Lug Restraints 12" FLGxMJ ADAPTER W/Mega Lug Restraints	EA	1
30	20	6" MJ 45° BENDS W/TB & Mega Lug Restraints	EA	4
31	21	AFTER SATISFACTORY TESTING & ACCEPTANCE OF NEW MAIN, REMOVE BLOW-OFF ASSEMBLIES AND CONNECT TO 12" PVC C-900, PC-150(W) 74 LF 12" PVC C-900, PC-150(W) 12" 11 1/4° MJ BEND W/TB & MEGA LUG RESTRAINTS (2) 12" MJ SLEEVE (PVC C-900 TO PVC-C900) W/MEGA LUG RESTRAINTS EMERGENCY CONNECTION	EA	1

REFERENCE SYMBOLS

1/1 — SECTION OR DETAIL NUMBER / SHEET ON WHICH SECTION OR DETAIL OCCURS

NOTE:
WHEN AN EXISTING PIPE IS CUT AND NOT RECONNECTED, THE CUT ENDS SHALL BE CAPPED OR PLUGGED, AS DIRECTED BY THE INSPECTOR. THIS SHALL BE INCIDENTAL TO THE SCOPE OF WORK AND CONTRACT PRICE.

DESIGNED	SJF
DRAWN	SJF
CRP	380122
HOR.	1"=30'
VERT.	NA
DATE	OCT 2004
DWG:	
SHEET	WW-2 OF 4

CALL 48 HOURS BEFORE YOU DIG 1-800-553-4344 "It's the Law" NORTHWEST UTILITIES NOTIFICATION CENTER

SHAWN G. MOORE STATE OF WASHINGTON 38067 REGISTERED PROFESSIONAL ENGINEER 10/6/04
EXPIRES: APRIL 30, 2006

DESIGN & ENGINEERING DIVISION
DESIGN SECTION

NW 119TH / 117TH STREET
WATER SYSTEM PLAN

CLARK COUNTY WASHINGTON
proud past, promising future

FUTURE STREET & STORM IMPROVEMENTS PER CLARK COUNTY CAPITAL IMPROVEMENTS PROGRAM - COUNTY ROAD PROJECT #380122. VERTICAL DATA PROVIDED BY CLARK COUNTY

NOTE:
WHEN AN EXISTING PIPE IS CUT AND NOT RECONNECTED, THE CUT ENDS SHALL BE CAPPED OR PLUGGED, AS DIRECTED BY THE INSPECTOR. THIS SHALL BE INCIDENTAL TO THE SCOPE OF WORK AND CONTRACT PRICE.

REFERENCE SYMBOLS

1/1 SECTION OR DETAIL NUMBER / SHEET ON WHICH SECTION OR DETAIL OCCURS

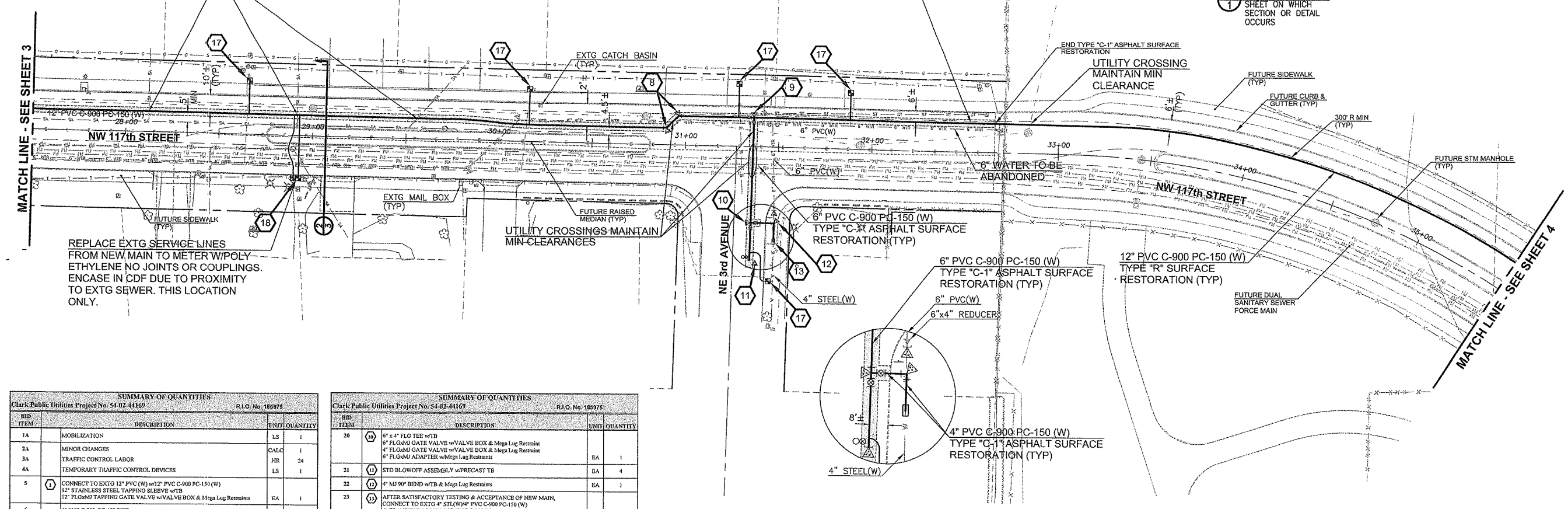

Scale 1" = 30'

30 15 0 30 60 90

SUMMARY OF QUANTITIES Clark Public Utilities Project No: 54-02-44169 R.I.O. No: 185975				
BID ITEM		DESCRIPTION	UNIT	QUANTITY
1A		MOBILIZATION	LS	1
2A		MINOR CHANGES	CALC	1
3A		TRAFFIC CONTROL LABOR	HR	24
4A		TEMPORARY TRAFFIC CONTROL DEVICES	LS	1
5	1	CONNECT TO EXTG 12" PVC (W) w/12" PVC C-900 PC-150 (W) 12" STAINLESS STEEL TAPPING SLEEVE w/TB 12" FLGxMJ TAPPING GATE VALVE w/VALVE BOX & Mega Lug Restraints	EA	1
6		4" PVC C-900, PC-150 PIPE Type "C-1" Asphalt Surface Restoration	LF	20
7		6" PVC C-900, PC-150 PIPE Type "C-1" Asphalt Surface Restoration	LF	185
8		6" PVC C-900, PC-150 PIPE Type "R" Surface Restoration	LF	60
9		8" PVC C-900, PC-150 PIPE Type "R" Surface Restoration	LF	110
10		12" PVC C-900, PC-150 PIPE Type "R" Surface Restoration	LF	2540
11		12" PVC C-900, PC-150 PIPE Type "C-1" Asphalt Surface Restoration	LF	860
12	2	12"x 8" FLG TEE w/TB 12" FLGxMJ BF VALVE w/VALVE BOX & Mega Lug Restraints 8" FLGxMJ GATE VALVE w/VALVE BOX & Mega Lug Restraints 12" FLGxMJ ADAPTER w/Mega Lug Restraints	EA	3
13	3	8" MJ x 6" SIDE FLG TEE w/TB 6" FLGxMJ GATE VALVE w/VALVE BOX & Mega Lug Restraints STANDARD FIRE HYDRANT ASSEMBLY LOCATE HYDRANT AS DIRECTED BY CLARK PUBLIC UTILITIES	EA	3
14	4	CAP & BLOCK 8" PVC C-900, PC-150(W)	EA	3
15	5	12" MJ 22½° BEND w/TB & Mega Lug Restraints	EA	2
16	6	12" FLG CROSS 12" FLGxMJ BF VALVE w/VALVE BOX & Mega Lug Restraint 12" x 6" FLGxMJ REDUCER w/Mega Lug Restraint 12" FLGxMJ ADAPTER w/Mega Lug Restraints 6" FLGxMJ GATE VALVE w/VALVE BOX & Mega Lug Restraint 12"x6" FLG REDUCER	EA	1
17	7	AFTER SATISFACTORY TESTING & ACCEPTANCE OF NEW MAIN, CONNECT TO EXTG 6" PVC(W)/6" PVC C-900 PC-150 (W) 6" MJ SLEEVE (PVC C-900 PC-150 TO PVC) CUT & CAP EXTG 6" PVC(W)	EA	2
18	8	12" MJ 45° BEND w/TB & Mega Lug Restraints	EA	3
19	9	12" x 6" FLG TEE w/TB 12" FLGxMJ BF VALVE w/VALVE BOX & Mega Lug Restraint 6" FLGxMJ GATE VALVE w/VALVE BOX & Mega Lug Restraint 12" FLGxMJ ADAPTER w/Mega Lug Restraints	EA	1

SUMMARY OF QUANTITIES Clark Public Utilities Project No: 54-02-44169 R.I.O. No: 185975				
BID ITEM		DESCRIPTION	UNIT	QUANTITY
20	10	6" x 4" FLG TEE w/TB 6" FLGxMJ GATE VALVE w/VALVE BOX & Mega Lug Restraint 4" FLGxMJ GATE VALVE w/VALVE BOX & Mega Lug Restraint 6" FLGxMJ ADAPTER w/Mega Lug Restraints	EA	1
21	11	STD BLOWOFF ASSEMBLY w/PRECAST TB	EA	4
22	12	4" MJ 90° BEND w/TB & Mega Lug Restraints	EA	1
23	13	AFTER SATISFACTORY TESTING & ACCEPTANCE OF NEW MAIN, CONNECT TO EXTG 4" STL(W)/4" PVC C-900 PC-150 (W) 4" TRANSITION COUPLING (PVC C-900 PC-150 TO STEEL) CUT & CAP EXTG 4" STL(W)	EA	1
24	14	12" FLG TEE w/TB (3)12" FLGxMJ BF VALVE w/VALVE BOX & Mega Lug Restraint	EA	1
25	15	12" MJ 90° BEND w/TB & Mega Lug Restraints	EA	3
26	16	AFTER SATISFACTORY TESTING & ACCEPTANCE OF NEW MAIN, CONNECT TO EXTG 12" PVC CL-200(W)/12" PVC C-900 PC-150 (W) 12" MJ SLEEVE (PVC C-900 PC-150 TO PVC CL-200) CUT & CAP EXTG 12" PVC CL-200(W)	EA	2
27	17	STANDARD WATER SERVICE - NEAR SIDE	EA	5
28	18	STANDARD WATER SERVICE - FAR SIDE TRANSFER EXTG WATER SERVICE LINE TO NEW TAP AFTER TESTING & ACCEPTANCE OF NEW MAIN. EACH METER TO HAVE INDIVIDUAL SERVICE PER CLARK PUBLIC UTILITIES STD DETAILS, SHEET 5. EXTG WATER SERVICES OTHER THAN P.E. CL-203 SHALL BE REPLACED AND NEW SERVICES SHALL BE EXTENDED TO THE METER. FOR FAR SIDE SERVICES, THE CONTRACTOR SHALL BORE OR PUSH THE SERVICE UNDER THE ROADWAY	EA	2
29	19	12" FLGxMJ TEE W/TB & Mega Lug Restraints 12"FLGxMJ BF VALVE W/VALVE BOX & Mega Lug Restraints 12" FLGxMJ ADAPTER W/Mega Lug Restraints	EA	1
30	20	6" MJ 45° BENDS W/TB & Mega Lug Restraints	EA	4
31	21	AFTER SATISFACTORY TESTING & ACCEPTANCE OF NEW MAIN, REMOVE BLOW-OFF ASSEMBLIES AND CONNECT TO 12" PVC C-900, PC-150(W) 74 LF 12" PVC C-900, PC-150(W) 12" 11 1/4° MJ BEND W/TB & MEGA LUG RESTRAINTS (2) 12" MJ SLEEVE (PVC C-900 TO PVC-C900) W/MEGA LUG RESTRAINTS EMERGENCY CONNECTION	EA	1

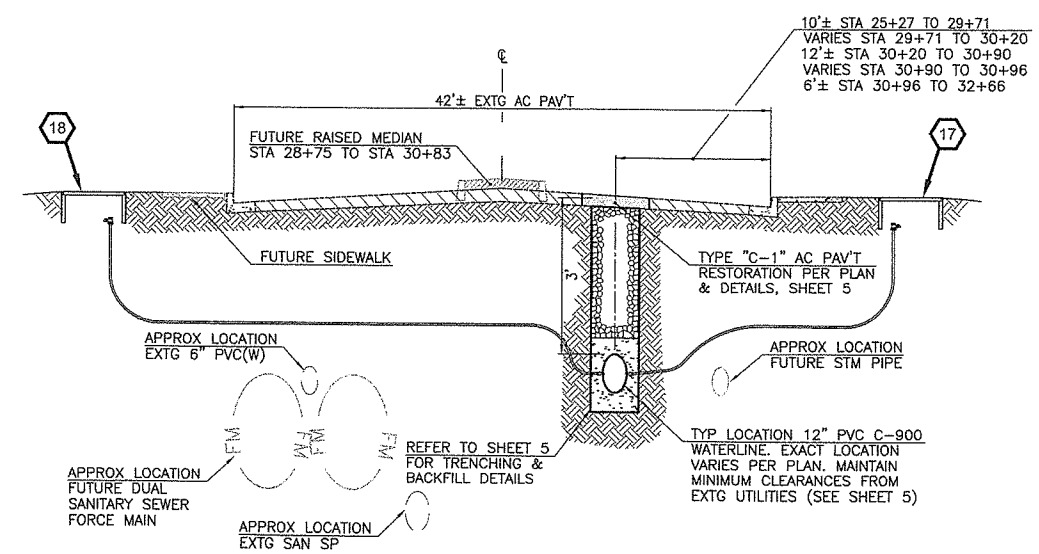

2/3 NW 117th STREET TYPICAL SECTION
STA 25+27 TO 32+66 NTS

DESIGNED SJF
DRAWN SJF
CRP 380122
HOR. 1"=30'
VERT. NA
DATE OCT 2004
DWG:
SHEET WW-3 OF 4

CALL 48 HOURS BEFORE YOU DIG 1-800-553-4344 "It's the Law" NORTHWEST UTILITIES NOTIFICATION CENTER

SHAWN G. MOORE STATE OF WASHINGTON 38857 REGISTERED PROFESSIONAL ENGINEER 10/8/04
EXPIRES: APRIL 30, 2005

DESIGN & ENGINEERING DIVISION
DESIGN SECTION

NW 119TH / 117TH STREET WATER SYSTEM PLAN

proud past, promising future
CLARK COUNTY WASHINGTON

NOTE:
WHEN AN EXISTING PIPE IS CUT AND NOT RECONNECTED, THE CUT ENDS SHALL BE CAPPED OR PLUGGED, AS DIRECTED BY THE INSPECTOR. THIS SHALL BE INCIDENTAL TO THE SCOPE OF WORK AND CONTRACT PRICE.

FUTURE STREET & STORM IMPROVEMENTS PER CLARK COUNTY CAPITAL IMPROVEMENTS PROGRAM - COUNTY ROAD PROJECT #380122. VERTICAL DATA PROVIDED BY CLARK COUNTY.

REFERENCE SYMBOLS

SECTION OR DETAIL NUMBER
SHEET ON WHICH SECTION OR DETAIL OCCURS

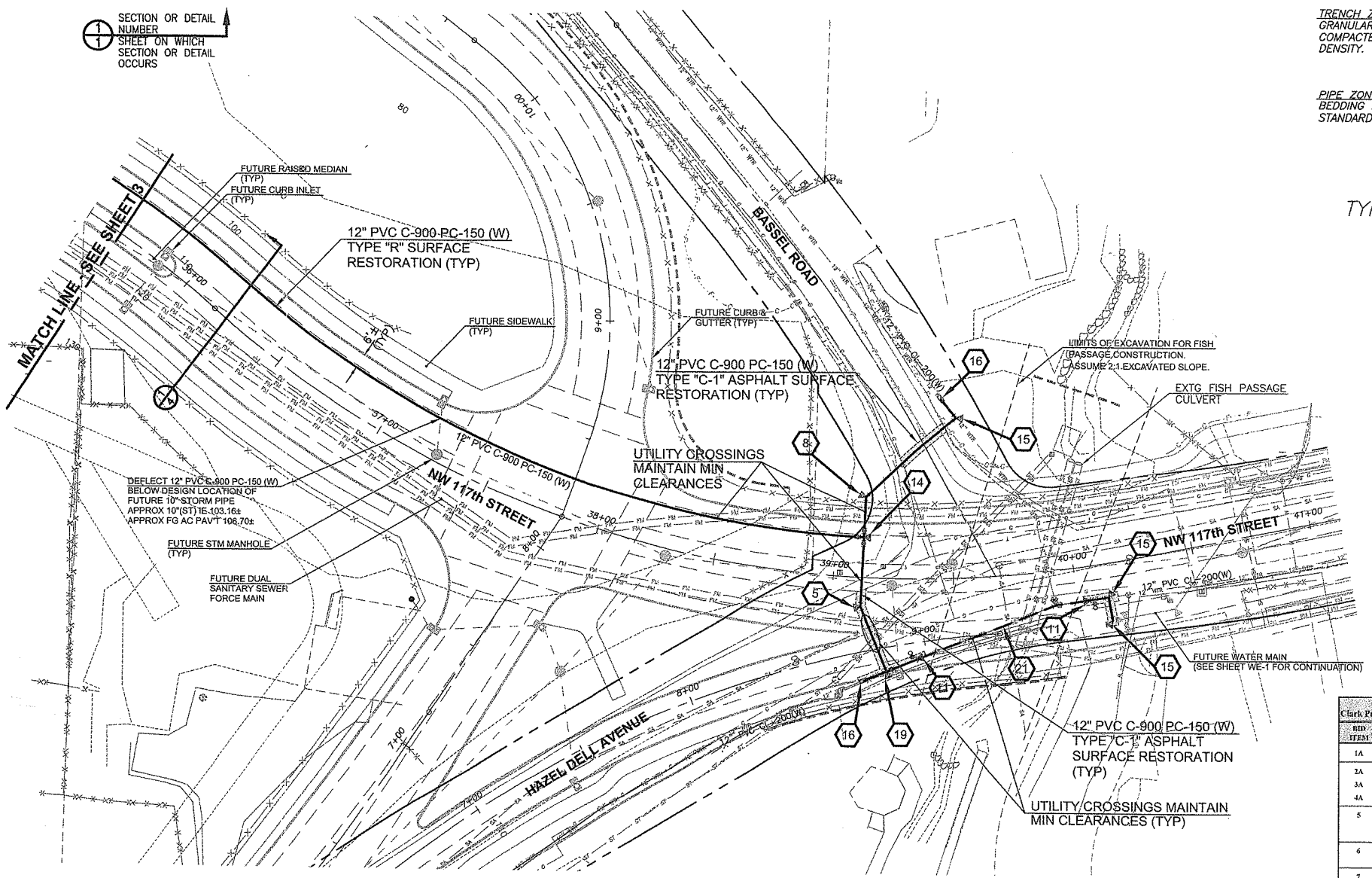

Scale 1" = 30'

30 15 0 30 60 90

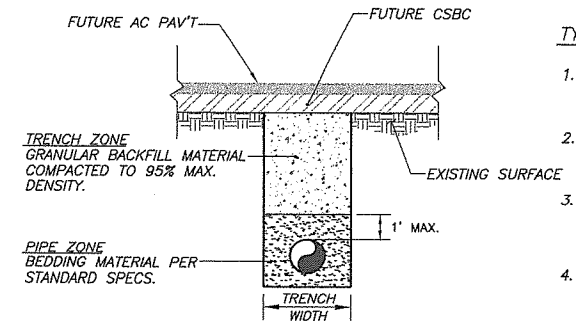

TYPE "R" SURFACE RESTORATION

TYPE "R" RESTORATION TRENCHING NOTES:

1. SEE CLARK COUNTY OR WSDOT UTILITY PERMIT, WHICHEVER IS APPLICABLE, FOR ADDITIONAL TRENCH BACKFILL AND SURFACING REQUIREMENTS.
2. NATIVE MATERIALS MAY BE SUBSTITUTED FOR IMPORTED GRANULAR MATERIAL PROVIDING IT IS PRE-APPROVED BY THE COUNTY ENGINEER OR AUTHORIZED REPRESENTATIVE.
3. TRENCH EXCAVATION, BEDDING, AND BACKFILL FOR WATER MAINS SHALL BE IN ACCORDANCE WITH SECTION 7-10 OF THE MOST CURRENT STANDARD SPECIFICATIONS. BED PIPE PER SECTION 7-10.3(9) OF THE STANDARD SPECIFICATIONS.
4. IN THE TRENCH ZONE, USE METHOD C COMPACTION PER SECTION 2-03.3(14).

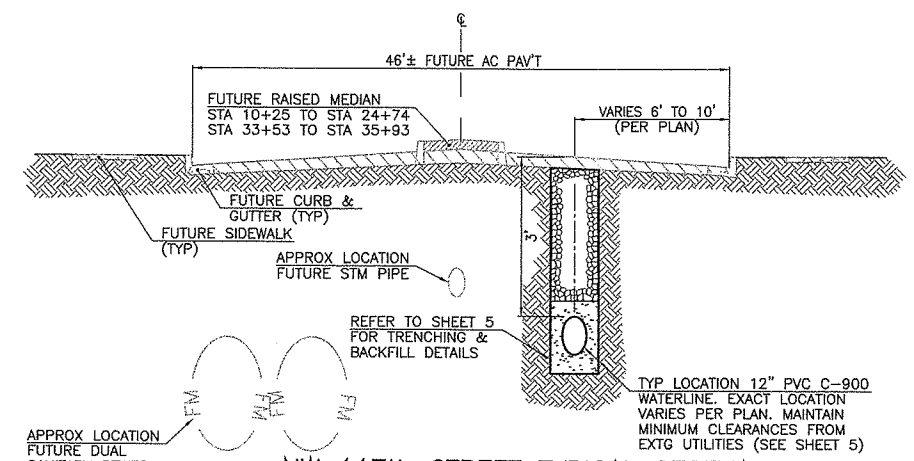

1/4 NW 117th STREET TYPICAL SECTION
NTS
STA 7+09 TO 25+27
STA 32+66 TO END

SUMMARY OF QUANTITIES
Clark Public Utilities Project No. 54-02-44169 R.I.O. No. 182975

BID ITEM		DESCRIPTION	UNIT	QUANTITY
1A		MOBILIZATION	LS	1
2A		MINOR CHANGES	CALC	1
3A		TRAFFIC CONTROL LABOR	HR	24
4A		TEMPORARY TRAFFIC CONTROL DEVICES	LS	1
5	1	CONNECT TO EXTG 12" PVC (W) w/12" PVC C-900 PC-150 (W) 12" STAINLESS STEEL TAPPING SLEEVE w/TB 12" FLGxMJ TAPPING GATE VALVE w/VALVE BOX & Mega Lug Restraints	EA	1
6		4" PVC C-900, PC-150 PIPE Type "C-1" Asphalt Surface Restoration	LF	20
7		6" PVC C-900, PC-150 PIPE Type "C-1" Asphalt Surface Restoration	LF	185
8		6" PVC C-900, PC-150 PIPE Type "R" Surface Restoration	LF	60
9		8" PVC C-900, PC-150 PIPE Type "R" Surface Restoration	LF	110
10		12" PVC C-900, PC-150 PIPE Type "R" Surface Restoration	LF	2540
11		12" PVC C-900, PC-150 PIPE Type "C-1" Asphalt Surface Restoration	LF	860
12	2	12"x 8" FLG TEE w/TB 12" FLGxMJ BF VALVE w/VALVE BOX & Mega Lug Restraints 8" FLGxMJ GATE VALVE w/VALVE BOX & Mega Lug Restraints 12" FLGxMJ ADAPTER w/Mega Lug Restraints	EA	3
13	3	8" MJ x 6" SIDE FLG TEE w/TB 6" FLGxMJ GATE VALVE w/VALVE BOX & Mega Lug Restraints STANDARD FIRE HYDRANT ASSEMBLY LOCATE HYDRANT AS DIRECTED BY CLARK PUBLIC UTILITIES	EA	3
14	4	CAP & BLOCK 8" PVC C-900, PC-150(W)	EA	3
15	5	12" MJ 22½° BEND w/TB & Mega Lug Restraints	EA	2
16	6	12" FLG CROSS 12" FLGxMJ BF VALVE w/VALVE BOX & Mega Lug Restraint 12" x 6" FLGxMJ REDUCER w/Mega Lug Restraint 12" FLGxMJ ADAPTER w/Mega Lug Restraints 6" FLGxMJ GATE VALVE w/VALVE BOX & Mega Lug Restraint 12"x6" FLG REDUCER	EA	1
17	7	AFTER SATISFACTORY TESTING & ACCEPTANCE OF NEW MAIN, CONNECT TO EXTG 6" PVC(W)/6" PVC C-900 PC-150 (W) 6" MJ SLEEVE (PVC C-900 PC-150 TO PVC) CUT & CAP EXTG 6" PVC(W)	EA	2
18	8	12" MJ 45° BEND w/TB & Mega Lug Restraints	EA	3
19	9	12" x 6" FLG TEE w/TB 12" FLGxMJ BF VALVE w/VALVE BOX & Mega Lug Restraint 6" FLGxMJ GATE VALVE w/VALVE BOX & Mega Lug Restraint 12" FLGxMJ ADAPTER w/Mega Lug Restraints	EA	1

SUMMARY OF QUANTITIES
Clark Public Utilities Project No. 54-02-44169 R.I.O. No. 182975

BID ITEM		DESCRIPTION	UNIT	QUANTITY
20	10	6" x 4" FLG TEE w/TB 6" FLGxMJ GATE VALVE w/VALVE BOX & Mega Lug Restraint 4" FLGxMJ GATE VALVE w/VALVE BOX & Mega Lug Restraint 6" FLGxMJ ADAPTER w/Mega Lug Restraints	EA	1
21	11	STD BLOWOFF ASSEMBLY w/PRECAST TB	EA	4
22	12	4" MJ 90° BEND w/TB & Mega Lug Restraints	EA	1
23	13	AFTER SATISFACTORY TESTING & ACCEPTANCE OF NEW MAIN, CONNECT TO EXTG 4" STL(W)/4" PVC C-900 PC-150 (W) 4" TRANSITION COUPLING (PVC C-900 PC-150 TO STEEL) CUT & CAP EXTG 4" STL(W)	EA	1
24	14	12" FLG TEE w/TB (3)12" FLGxMJ BF VALVE w/VALVE BOX & Mega Lug Restraint	EA	1
25	15	12" MJ 90° BEND w/TB & Mega Lug Restraints	EA	3
26	16	AFTER SATISFACTORY TESTING & ACCEPTANCE OF NEW MAIN, CONNECT TO EXTG 12" PVC CL-200(W)/12" PVC C-900 PC-150 (W) 12" MJ SLEEVE (PVC C-900 PC-150 TO PVC CL-200) CUT & CAP EXTG 12" PVC CL-200(W)	EA	2
27	17	STANDARD WATER SERVICE - NEAR SIDE	EA	5
28	18	STANDARD WATER SERVICE - FAR SIDE TRANSFER EXTG WATER SERVICE LINE TO NEW TAP AFTER TESTING & ACCEPTANCE OF NEW MAIN. EACH METER TO HAVE INDIVIDUAL SERVICE PER CLARK PUBLIC UTILITIES STD DETAILS, SHEET 5. EXTG WATER SERVICES OTHER THAN P.E. CL-200 SHALL BE REPLACED AND NEW SERVICES SHALL BE EXTENDED TO THE METER. FOR FAR SIDE SERVICES, THE CONTRACTOR SHALL BORE OR PUSH THE SERVICE UNDER THE ROADWAY.	EA	2
29	19	12" FLGxMJ TEE W/TB & Mega Lug Restraints 12"FLGxMJ BF VALVE W/VALVE BOX & Mega Lug Restraints 12" FLGxMJ ADAPTER W/Mega Lug Restraints	EA	1
30	20	6" MJ 45° BENDS W/TB & Mega Lug Restraints	EA	4
31	21	AFTER SATISFACTORY TESTING & ACCEPTANCE OF NEW MAIN, REMOVE BLOW-OFF ASSEMBLIES AND CONNECT TO 12" PVC C-900, PC-150(W) 74 LF 12" PVC C-900, PC-150(W) 12" 11 1/4° MJ BEND W/TB & MEGA LUG RESTRAINTS (2) 12" MJ SLEEVE (PVC C-900 TO PVC-C900) W/MEGA LUG RESTRAINTS EMERGENCY CONNECTION	EA	1

DESIGNED	SJF
DRAWN	SJF
CRP	380122
HOR.	1"=30'
VERT.	NA
DATE	OCT 2004
DWG:	
SHEET	WW 4 OF 4

CALL 48 HOURS BEFORE YOU DIG
1-800-553-4344
"It's the Law"
NORTHWEST UTILITIES NOTIFICATION CENTER

SHAWN G. MOORE
STATE OF WASHINGTON
36997
REGISTERED PROFESSIONAL ENGINEER
10/6/0
EXPIRES: APRIL 30, 2006

DESIGN & ENGINEERING DIVISION
DESIGN SECTION

NW 119TH / 117TH STREET
WATER SYSTEM PLAN

proud past, promising future
CLARK COUNTY
WASHINGTON

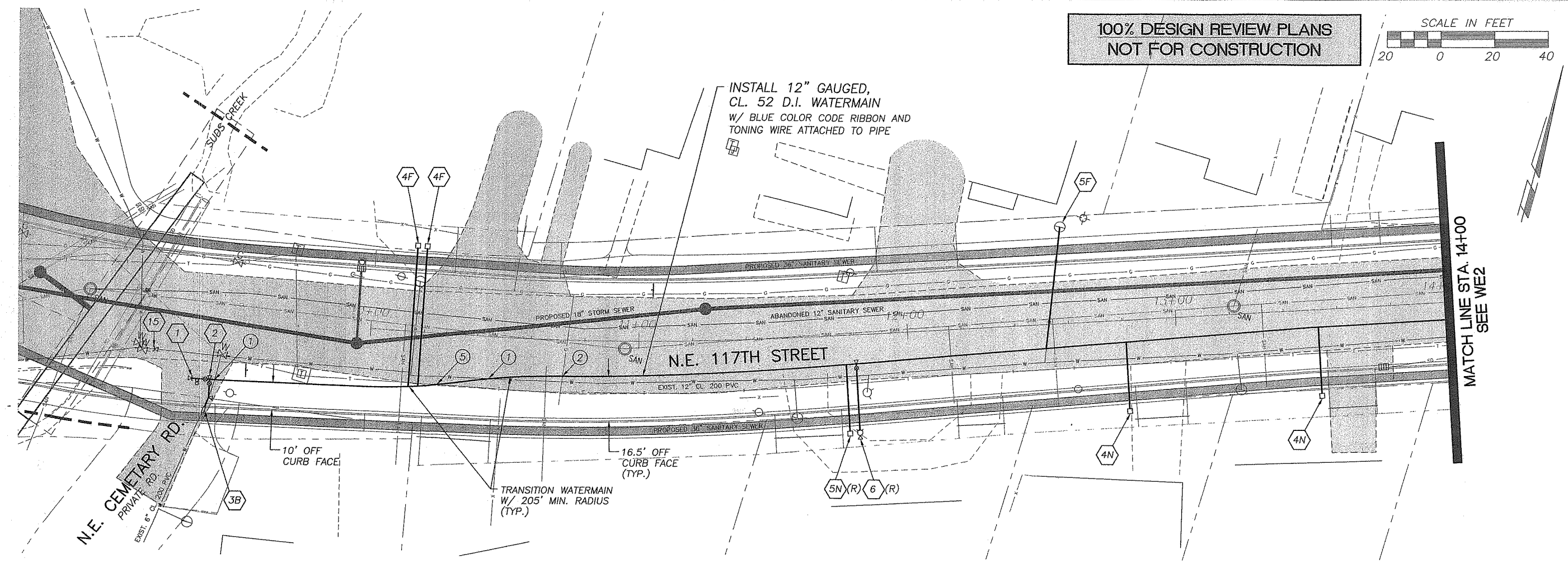

SEE SHEET WE7 FOR ADDITIONAL PROJECT CONSTRUCTION NOTES

TOTAL PROJECT WATERMAIN TOTALS

APPROXIMATE LENGTH OF 12" GAUGED CL. 52 D.I. PIPE = 3,260 LINEAL FEET +/-

WATER LEGEND

- EXIST. WATER LINE
- EXIST. FIRE HYDRANT
- EXIST. WATER METER
- EXIST. WATER METER
- PROP. SANITARY SEWER LINE
- PROP. STORM SEWER LINE W/ MANHOLE
- NEW WATER LINE
- NEW FIRE HYDRANT ASSEMBLY
- NEW WATER VALVE
- NEW BLOW-OFF
- NEW END CAP
- NEW THRUST BLOCK
- NEW TRANSITION SLEEVE
- NEW/RELOCATED WATER METER

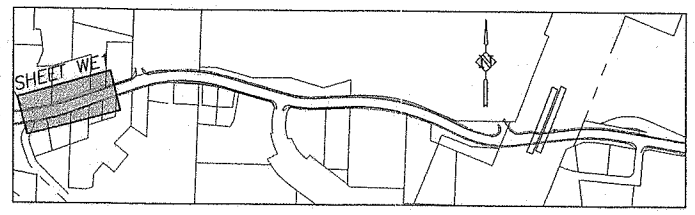

KEY MAP
N.T.S.

PROJECT CONSTRUCTION NOTES – SHEET WE1 ONLY

NO. OF LOCATIONS ON DWG. WE1 ONLY (SEE * NOTE:)	ASSEMBLY REFERENCE NUMBER (#) AND DESCRIPTION
1	(1) 1 – STD. PERPENDICULAR BLOW-OFF ASSEMBLY, INCLUDING MAIN CAP AND THRUST BLOCK
1	(2) 1 – 12" x 6" C.I. TEE, FLG. 1 – 12" B.F.V., FLG. x M.J. W/ MEGALUG RETAINER GLANDS 1 – 12" ADAPTER, FLG. x M.J. W/ MEGALUG RETAINER GLANDS 1 – 6" G.V., FLG. x M.J. W/ MEGALUG RETAINER GLANDS 1 – 6", 22 1/2° C.I. BEND, M.J. W/ MEGALUG RETAINER GLANDS 2 – VALVE BOX TOP W/ 6" PVC PIPE EXT. 2 – THRUST BLOCK APPROX. 10 L.F. 6" CL. 52 D.I. PIPE
0	(3A) UPON SATISFACTORY TESTING AND ACCEPTANCE OF NEW MAIN, CUT EXIST. PIPE AND CONNECT NEW CL. 52 D.I. TO EXIST. PIPE WITH:
1	(3B) 3A = 4" LONG PATTERN TRANSITION SLEEVE, M.J. (CL. 52 D.I./CL. 200 PVC)
0	(3C) 3B = 6" LONG PATTERN TRANSITION SLEEVE, M.J. (CL. 52 D.I./CL. 200 PVC) 3C = 8" LONG PATTERN TRANSITION SLEEVE, M.J. (CL. 52 D.I./CL. 200 PVC)
0	(3D) 3D = 8" LONG PATTERN TRANSITION SLEEVE, M.J. (CL. 52 D.I./C-900 PVC) ABANDON EXIST. LINE WITH END CAP AND THRUST BLOCK PER C.P.U. REQUIREMENTS.
2	(4N) 1 – 12" x 1" SERVICE CLAMP, LINE, FITTING AND METER BOX W/ 1" CORP. STOP (AS PER STD. WATER SERVICE). TRANSFER EXIST. WATER SERVICE LINE TO NEW METER FOLLOWING TESTING AND ACCEPTANCE OF NEW MAIN. EXIST. WATER SERVICES OTHER THAN 1" P.E. CLASS-200 PIPE SHALL BE REPLACED AND NEW SERVICE EXTENDED TO THE METER. EACH METER TO HAVE INDIVIDUAL SERVICE AS PER CPU STANDARD DETAIL. REMOVE EXIST. DOUBLE METER BOX AND RETURN TO CLARK PUBLIC UTILITIES. PROVIDE SURFACE RESTORATION PER PROJECT SPECIFICATIONS. 4N = NEAR SIDE SERVICE
2	(4F) 4F = FAR SIDE SERVICE

NO. OF LOCATIONS ON DWG. WE1 ONLY (SEE * NOTE:)	ASSEMBLY REFERENCE NUMBER (#) AND DESCRIPTION
0	(5N) 1 – 12" x 1" SERVICE CLAMP W/ 1" CORP. STOP (AS PER STD. WATER SERVICE). TRANSFER EXIST. WATER SERVICE LINE TO NEW TAP FOLLOWING TESTING AND ACCEPTANCE OF NEW MAIN. EXIST. WATER SERVICES OTHER THAN 1" P.E. CLASS 200 PIPE SHALL BE REPLACED AND NEW SERVICE EXTENDED TO THE METER. TRANSFER SERVICE AFTER SATISFACTORY TESTING. FOR FAR SIDE AND EXTENDED SERVICES, CONTRACTOR SHALL BORE OR PUSH EACH 1" SERVICE LINE. EACH METER TO HAVE INDIVIDUAL SERVICE AS PER CPU STANDARD DETAIL. FOR RELOCATED METERS, LOCATE WATER SERVICE LINE AND CONNECT NEW SERVICE LINE, BYPASS AND ABANDON EXIST. SERVICE. 5N = NEAR SIDE SERVICE (ADJUST METER BOX TO FINISH GRADE AS NECESSARY) 5N(R) = NEAR SIDE SERVICE (RELOCATED METER BOX) 5F = FAR SIDE SERVICE (ADJUST METER BOX TO FINISH GRADE AS NECESSARY) 5F(R) = FAR SIDE SERVICE (RELOCATED METER BOX)
1	(5N)(R)
1	(5F)
0	(5F)(R)
1	(6) 1 – STD. FIRE HYDRANT ASSEMBLY W/ 12" x 6" C.I. TEE, M.J. x SIDE FLG., AND 6" G.V., FLG. x M.J. W/ MEGALUG RETAINER GLANDS (LOCATE HYDRANT AS DIRECTED BY THE INSPECTOR). ALL PIPE JOINTS FROM THE VALVE TO THE HYDRANT SHALL BE RESTRAINED PER THE STD. DETAIL. (R) = UPON SATISFACTORY TESTING AND ACCEPTANCE OF NEW MAIN, REMOVE EXIST. FIRE HYDRANT AND RETURN TO CLARK PUBLIC UTILITIES.
1	(15) UPON SATISFACTORY TESTING AND ACCEPTANCE OF NEW WATERMAIN, CUT, CAP AND ABANDON EXIST. WATERMAIN WITH END CAP AND THRUST BLOCK PER C.P.U. REQUIREMENTS.

* NOTE: THE NO. OF LOCATIONS REFERS TO ONLY THE ITEMS IDENTIFIED WITH (#) AND DOES NOT INCLUDE ITEMS CALLED OUT INDEPENDENTLY ON THE PLAN.

Clark Public Utilities

APPROVED FOR CONSTRUCTION
CLARK PUBLIC UTILITIES - WATER
SIGNATURE _____ DATE _____

W.O.# 01-44106 R.I.O.# 215892

DESIGNED	JDB
DRAWN	JDB
CRP	320322
HOR.	1" = 20'
VERT.	N/A
DATE	10/1/04
DWG:	WE1
SHEET	OF

CALL 48 HOURS BEFORE YOU DIG 1-800-553-4344 "It's the Law" NORTHWEST UTILITIES NOTIFICATION CENTER

CHRISTOPHER E. ROBERTSON STATE OF WASHINGTON 37132 REGISTERED PROFESSIONAL ENGINEER
EXPIRES: 9/8/

Harper Houf Peterson Righellis Inc.
ENGINEERS • PLANNERS • SURVEYORS
1104 Main Street, Suite 100, Vancouver, WA 98660
TEL 360.750.1151 www.hhpr.com FAX 360.750.1141

DESIGN & ENGINEERING DIVISION
DESIGN SECTION

N.W. 119TH/117TH STREET
WATER PLAN B.O.P. TO STA. 14+00

proud past, promising future
CLARK COUNTY WASHINGTON

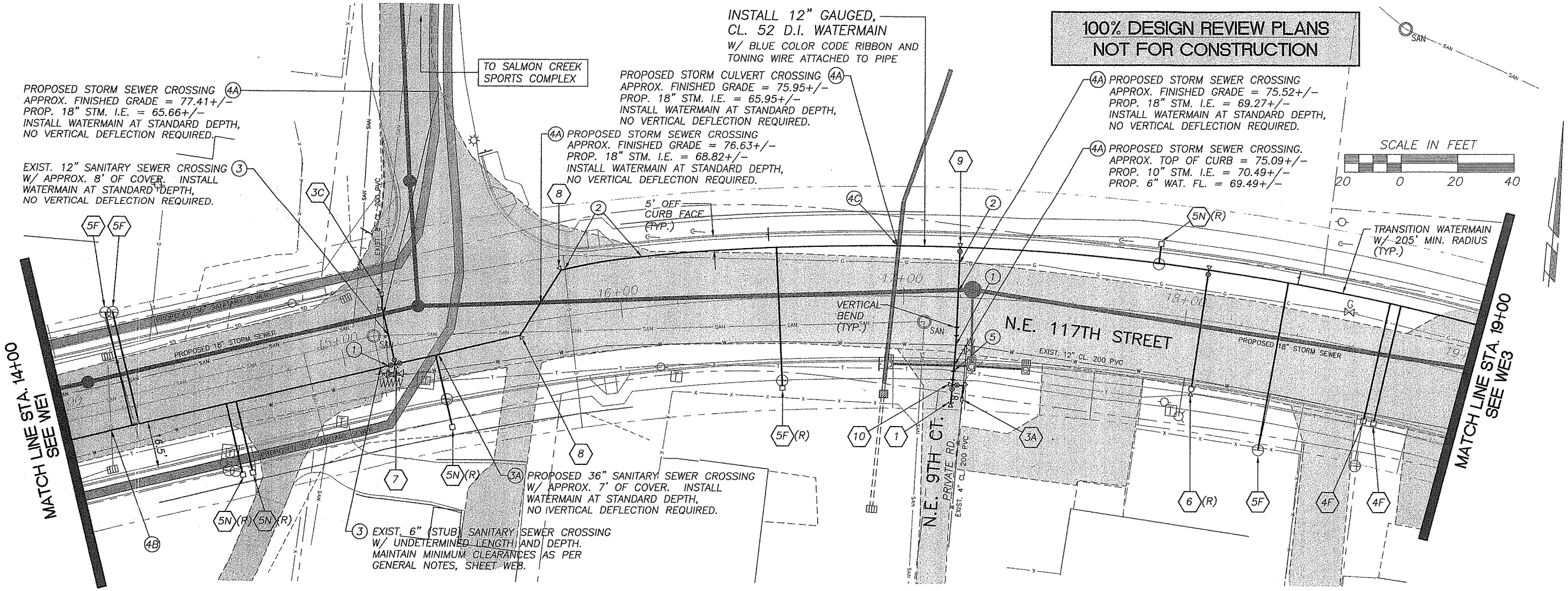

SEE SHEET WE7 FOR ADDITIONAL PROJECT CONSTRUCTION NOTES

WATER LEGEND

- EXIST. WATER LINE
- EXIST. FIRE HYDRANT
- EXIST. WATER METER
- EXIST. WATER METER
- PROP. SANITARY SEWER LINE
- PROP. STORM SEWER LINE W/ MANHOLE
- NEW WATER LINE
- NEW FIRE HYDRANT ASSEMBLY
- NEW WATER VALVE
- NEW BLOW-OFF
- NEW END CAP
- NEW THRUST BLOCK
- NEW TRANSITION SLEEVE
- NEW/RELOCATED WATER METER

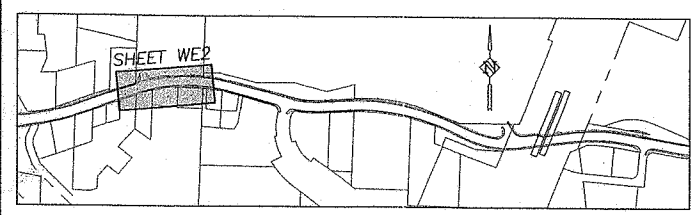

KEY MAP
N.T.S.

PROJECT CONSTRUCTION NOTES – SHEET WE2 ONLY

NO. OF LOCATIONS ON DWG. WE2 ONLY (SEE * NOTE:)	ASSEMBLY REFERENCE NUMBER (#) AND DESCRIPTION
1	(1) 1 – STD. PERPENDICULAR BLOW-OFF ASSEMBLY, INCLUDING MAIN CAP AND THRUST BLOCK
1	(3A) UPON SATISFACTORY TESTING AND ACCEPTANCE OF NEW MAIN, CUT EXIST. PIPE AND CONNECT NEW CL. 52 D.I. TO EXIST. PIPE WITH:
0	(3B) 3A = 4" LONG PATTERN TRANSITION SLEEVE, M.J. (CL. 52 D.I./CL. 200 PVC) 3B = 6" LONG PATTERN TRANSITION SLEEVE, M.J. (CL. 52 D.I./CL. 200 PVC)
1	(3C) 3C = 8" LONG PATTERN TRANSITION SLEEVE, M.J. (CL. 52 D.I./CL. 200 PVC) 3D = 8" LONG PATTERN TRANSITION SLEEVE, M.J. (CL. 52 D.I./C-900 PVC)
0	(3D) ABANDON EXIST. LINE WITH END CAP AND THRUST BLOCK PER C.P.U. REQUIREMENTS.
0	(4N) 1 – 12" x 1" SERVICE CLAMP, LINE, FITTING AND METER BOX W/ 1" CORP. STOP (AS PER STD. WATER SERVICE). TRANSFER EXIST. WATER SERVICE LINE TO NEW METER FOLLOWING TESTING AND ACCEPTANCE OF NEW MAIN. EXIST. WATER SERVICES OTHER THAN 1" P.E. CLASS-200 PIPE SHALL BE REPLACED AND NEW SERVICE EXTENDED TO THE METER. EACH METER TO HAVE INDIVIDUAL SERVICE AS PER CPU STANDARD DETAIL. REMOVE EXIST. DOUBLE METER BOX AND RETURN TO CLARK PUBLIC UTILITIES. PROVIDE SURFACE RESTORATION PER PROJECT SPECIFICATIONS. 4N = NEAR SIDE SERVICE 4F = FAR SIDE SERVICE
2	(4F)
0	(5N) 1 – 12" x 1" SERVICE CLAMP W/ 1" CORP. STOP (AS PER STD. WATER SERVICE). TRANSFER EXIST. WATER SERVICE LINE TO NEW TAP FOLLOWING TESTING AND ACCEPTANCE OF NEW MAIN. EXIST. WATER SERVICES OTHER THAN 1" P.E. CLASS 200 PIPE SHALL BE REPLACED AND NEW SERVICE EXTENDED TO THE METER. TRANSFER SERVICE AFTER SATISFACTORY TESTING. FOR FAR SIDE AND EXTENDED SERVICES, CONTRACTOR SHALL BORE OR PUSH EACH 1" SERVICE LINE. EACH METER TO HAVE INDIVIDUAL SERVICE AS PER CPU STANDARD DETAIL. FOR RELOCATED METERS, LOCATE WATER SERVICE LINE AND CONNECT NEW SERVICE LINE, BYPASS AND ABANDON EXIST. SERVICE. 5N = NEAR SIDE SERVICE (ADJUST METER BOX TO FINISH GRADE AS NECESSARY) 5N(R) = NEAR SIDE SERVICE (RELOCATED METER BOX) 5F = FAR SIDE SERVICE (ADJUST METER BOX TO FINISH GRADE AS NECESSARY) 5F(R) = FAR SIDE SERVICE (RELOCATED METER BOX)
4	(5N)(R)
3	(5F)
1	(5F)(R)
1	(6) 1 – STD. FIRE HYDRANT ASSEMBLY W/ 12" x 6" C.I. TEE, M.J. x SIDE FLG., AND 6" G.V., FLG. x M.J. W/ MEGALUG RETAINER GLANDS (LOCATE HYDRANT AS DIRECTED BY THE INSPECTOR). ALL PIPE JOINTS FROM THE VALVE TO THE HYDRANT SHALL BE RESTRAINED PER THE STD. DETAIL. (R) = UPON SATISFACTORY TESTING AND ACCEPTANCE OF NEW MAIN, REMOVE EXIST. FIRE HYDRANT AND RETURN TO CLARK PUBLIC UTILITIES.

NO. OF LOCATIONS ON DWG. WE2 ONLY (SEE * NOTE:)	ASSEMBLY REFERENCE NUMBER (#) AND DESCRIPTION
1	(7) 1 – 12" x 8" C.I. TEE, FLG. 2 – 12" B.F.V., FLG. x M.J. W/ MEGALUG RETAINER GLANDS 1 – 8" G.V., FLG. x M.J. W/ MEGALUG RETAINER GLANDS 1 – 8", 11 1/4° C.I. BEND, M.J. W/ MEGALUG RETAINER GLANDS 3 – VALVE BOX TOP W/ 6" PVC PIPE EXT. 2 – THRUST BLOCK APPROX. 25 L.F. 8" CL. 52 D.I. PIPE
2	(8) 1 – 12", 45° C.I. BEND, M.J. W/ MEGALUG RETAINER GLANDS 1 – THRUST BLOCK
1	(9) 1 – 12" x 6" C.I. TEE, M.J. x SIDE FLG. 1 – 6" G.V., FLG. x M.J. W/ MEGALUG RETAINER GLANDS 4 – 6", 22 1/2° C.I. (VERTICAL) BEND, M.J. W/ MEGALUG RETAINER GLANDS 1 – VALVE BOX TOP W/ 6" PVC PIPE EXT. 1 – THRUST BLOCK APPROX. 55 L.F. 6" CL. 52 D.I. PIPE NOTE: BENDS SHALL BE INSTALLED TO PROVIDE BOTH VERTICAL AND HORIZONTAL TRANSITIONS AS NECESSARY.
1	(10) 1 – 6" x 4" C.I. TEE, FLG. 1 – 6" G.V., FLG. x M.J. W/ MEGALUG RETAINER GLANDS 1 – 6" ADAPTER, FLG. x M.J. W/ MEGALUG RETAINER GLANDS 1 – 4" G.V., FLG. x M.J. W/ MEGALUG RETAINER GLANDS 1 – 4", 90° C.I. ELBOW, M.J. W/ MEGALUG RETAINER GLANDS 2 – VALVE BOX TOP W/ 6" PVC PIPE EXT. 2 – THRUST BLOCK APPROX. 10 L.F. 4" CL. 52 D.I. PIPE

* NOTE: THE NO. OF LOCATIONS REFERS TO ONLY THE ITEMS IDENTIFIED WITH (#) AND DOES NOT INCLUDE ITEMS CALLED OUT INDEPENDENTLY ON THE PLAN.

Clark Public Utilities

APPROVED FOR CONSTRUCTION
CLARK PUBLIC UTILITIES - WATER
SIGNATURE _____ DATE _____

W.O.# 01-44106 R.I.O.# 215892

DESIGNED	JDB
DRAWN	JDB
CRP	320322
HOR.	1" = 20'
VERT.	N/A
DATE	10/1/04
DWG:	WE2
SHEET	OF

CALL 48 HOURS BEFORE YOU DIG 1-800-553-4344 "It's the Law" NORTHWEST UTILITIES NOTIFICATION CENTER

CHRISTOPHER E. ROBERTSON STATE OF WASHINGTON 21598 REGISTERED PROFESSIONAL ENGINEER
EXPIRES: 8/6/

Harper Houf Peterson Righellis Inc.
ENGINEERS • PLANNERS • SURVEYORS
1104 Main Street, Suite 100, Vancouver, WA 98660
Tel 360.750.1141 www.hhpr.com Fax 360.750.1141

DESIGN & ENGINEERING DIVISION
DESIGN SECTION

N.W. 119TH/117TH STREET
WATER PLAN STA. 14+00 TO 19+00

proud past, promising future
CLARK COUNTY WASHINGTON

100% DESIGN REVIEW PLANS
NOT FOR CONSTRUCTION

SCALE IN FEET
20 0 20 40

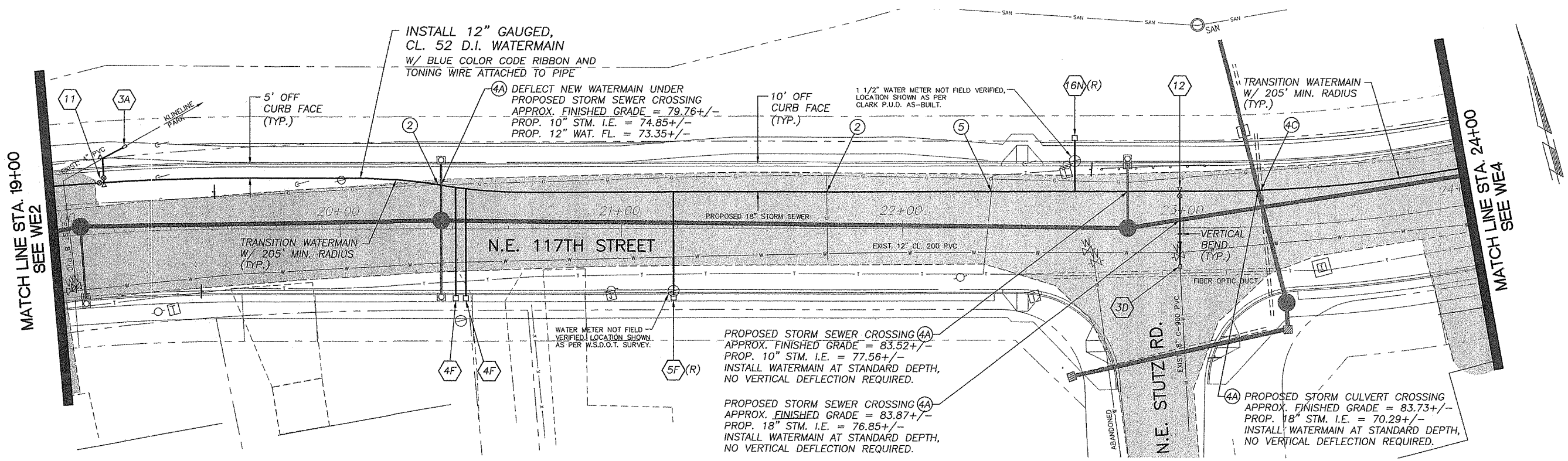

SEE SHEET WE7 FOR ADDITIONAL PROJECT CONSTRUCTION NOTES

WATER LEGEND

- EXIST. WATER LINE
- EXIST. FIRE HYDRANT
- EXIST. WATER METER
- EXIST. WATER METER
- PROP. SANITARY SEWER LINE
- PROP. STORM SEWER LINE W/ MANHOLE
- NEW WATER LINE
- NEW FIRE HYDRANT ASSEMBLY
- NEW WATER VALVE
- NEW BLOW-OFF
- NEW END CAP
- NEW THRUST BLOCK
- NEW TRANSITION SLEEVE
- NEW/RELOCATED WATER METER

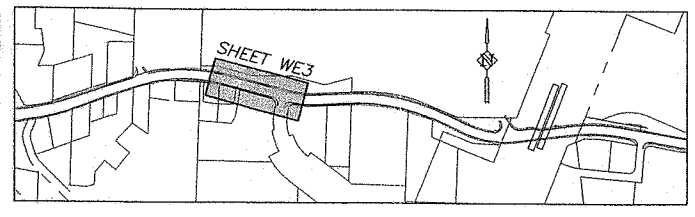

KEY MAP
N.T.S.

PROJECT CONSTRUCTION NOTES – SHEET WE3 ONLY

NO. OF LOCATIONS ON DWG. WE3 ONLY (SEE * NOTE:)	ASSEMBLY REFERENCE NUMBER (#) AND DESCRIPTION
1	(3A) UPON SATISFACTORY TESTING AND ACCEPTANCE OF NEW MAIN, CUT EXIST. PIPE AND CONNECT NEW CL. 52 D.I. TO EXIST. PIPE WITH:
0	(3B) 3A = 4" LONG PATTERN TRANSITION SLEEVE, M.J. (CL. 52 D.I./CL. 200 PVC)
0	(3C) 3B = 6" LONG PATTERN TRANSITION SLEEVE, M.J. (CL. 52 D.I./CL. 200 PVC) 3C = 8" LONG PATTERN TRANSITION SLEEVE, M.J. (CL. 52 D.I./CL. 200 PVC)
1	(3D) 3D = 8" LONG PATTERN TRANSITION SLEEVE, M.J. (CL. 52 D.I./C-900 PVC) ABANDON EXIST. LINE WITH END CAP AND THRUST BLOCK PER C.P.U. REQUIREMENTS.
0	(4N) 1 – 12" x 1" SERVICE CLAMP, LINE, FITTING AND METER BOX W/ 1" CORP. STOP (AS PER STD. WATER SERVICE). TRANSFER EXIST. WATER SERVICE LINE TO NEW METER FOLLOWING TESTING AND ACCEPTANCE OF NEW MAIN. EXIST. WATER SERVICES OTHER THAN 1" P.E. CLASS-200 PIPE SHALL BE REPLACED AND NEW SERVICE EXTENDED TO THE METER. EACH METER TO HAVE INDIVIDUAL SERVICE AS PER CPU STANDARD DETAIL. REMOVE EXIST. DOUBLE METER BOX AND RETURN TO CLARK PUBLIC UTILITIES. PROVIDE SURFACE RESTORATION PER PROJECT SPECIFICATIONS. 4N = NEAR SIDE SERVICE
2	(4F) 4F = FAR SIDE SERVICE
0	(5N) 1 – 12" x 1" SERVICE CLAMP W/ 1" CORP. STOP (AS PER STD. WATER SERVICE). TRANSFER EXIST. WATER SERVICE LINE TO NEW TAP FOLLOWING TESTING AND ACCEPTANCE OF NEW MAIN. EXIST. WATER SERVICES OTHER THAN 1" P.E. CLASS 200 PIPE SHALL BE REPLACED AND NEW SERVICE EXTENDED TO THE METER. TRANSFER SERVICE AFTER SATISFACTORY TESTING. FOR FAR SIDE AND EXTENDED SERVICES, CONTRACTOR SHALL BORE OR PUSH EACH 1" SERVICE LINE. EACH METER TO HAVE INDIVIDUAL SERVICE AS PER CPU STANDARD DETAIL. FOR RELOCATED METERS, LOCATE WATER SERVICE LINE AND CONNECT NEW SERVICE LINE, BYPASS AND ABANDON EXIST. SERVICE. 5N = NEAR SIDE SERVICE (ADJUST METER BOX TO FINISH GRADE AS NECESSARY)
0	(5N)(R) 5N(R) = NEAR SIDE SERVICE (RELOCATED METER BOX)
0	(5F) 5F = FAR SIDE SERVICE (ADJUST METER BOX TO FINISH GRADE AS NECESSARY)
1	(5F)(R) 5F(R) = FAR SIDE SERVICE (RELOCATED METER BOX)

NO. OF LOCATIONS ON DWG. WE3 ONLY (SEE * NOTE:)	ASSEMBLY REFERENCE NUMBER (#) AND DESCRIPTION
1	(11) 1 – 12" x 4" C.I. TEE, FLG. 1 – 12" B.F.V., FLG. x M.J. W/ MEGALUG RETAINER GLANDS 1 – 12" ADAPTER, FLG. x M.J. W/ MEGALUG RETAINER GLANDS 1 – 4" G.V., FLG. x M.J. W/ MEGALUG RETAINER GLANDS 1 – 4", 45° C.I. BEND, M.J. W/ MEGALUG RETAINER GLANDS 1 – 4", 22 1/2° C.I. BEND, M.J. W/ MEGALUG RETAINER GLANDS 2 – VALVE BOX TOP W/ 6" PVC PIPE EXT. 3 – THRUST BLOCK APPROX. 20 L.F. 4" CL. 52 D.I. PIPE
1	(12) 1 – 12" x 8" C.I. TEE, M.J. x SIDE FLG. 1 – 8" G.V., FLG. x M.J. W/ MEGALUG RETAINER GLANDS 2 – 8", 45° C.I. (VERTICAL) BEND, M.J. W/ MEGALUG RETAINER GLANDS 1 – VALVE BOX TOP W/ 6" PVC PIPE EXT. 1 – THRUST BLOCK APPROX. 25 L.F. 8" CL. 52 D.I. PIPE NOTE: VERTICAL BENDS SHALL PROVIDE APPROX. 2' OF ADDITIONAL PIPE COVER TO ACCOMMODATE SOUTHERN CONNECTION AT ASSEMBLY NO. 3D.
1	(16N)(R) 1 – 12" x 2" SERVICE SADDLE W/ 2" IRON BODY GATE VALVE (AS PER STD. WATER SERVICE). TRANSFER EXIST. WATER SERVICE LINE TO NEW TAP FOLLOWING TESTING AND ACCEPTANCE OF NEW MAIN. EXIST. WATER SERVICES OTHER THAN 2" SCH. 80 PVC PIPE SHALL BE REPLACED AND NEW SERVICE EXTENDED TO THE METER. TRANSFER SERVICE AFTER SATISFACTORY TESTING. EACH METER TO HAVE INDIVIDUAL SERVICE AS PER CPU STANDARD DETAIL. FOR RELOCATED METERS, LOCATE WATER SERVICE LINE AND CONNECT NEW SERVICE LINE, BYPASS AND ABANDON EXIST. SERVICE. 16N(R) = NEAR SIDE SERVICE (RELOCATED METER BOX)

* NOTE: THE NO. OF LOCATIONS REFERS TO ONLY THE ITEMS IDENTIFIED WITH (#) AND DOES NOT INCLUDE ITEMS CALLED OUT INDEPENDENTLY ON THE PLAN.

Clark Public Utilities

APPROVED FOR CONSTRUCTION
CLARK PUBLIC UTILITIES - WATER
SIGNATURE _____ DATE _____

W.O.# 01-44106 R.I.O.# 215892

DESIGNED	JDB
DRAWN	JDB
CRP	320322
HOR.	1" = 20'
VERT.	N/A
DATE	10/1/04
DWG:	WE3
SHEET	OF

CALL 48 HOURS BEFORE YOU DIG 1-800-553-4344 "It's the Law" NORTHWEST UTILITIES NOTIFICATION CENTER

CHRISTOPHER E. ROBERTSON STATE OF WASHINGTON 37312 REGISTERED PROFESSIONAL ENGINEER
EXPIRES: 8/6/

Harper Hout Peterson Righellis Inc.
ENGINEERS • PLANNERS • SURVEYORS
1104 Main Street, Suite 100, Vancouver, WA 98660
TEL: 360.750.1141 www.hhpr.com FAX: 360.750.1141

DESIGN & ENGINEERING DIVISION
DESIGN SECTION

N.W. 119TH/117TH STREET
WATER PLAN STA. 19+00 TO 24+00

proud past, promising future
CLARK COUNTY WASHINGTON

100% DESIGN REVIEW PLANS
NOT FOR CONSTRUCTION

SCALE IN FEET
20 0 20 40

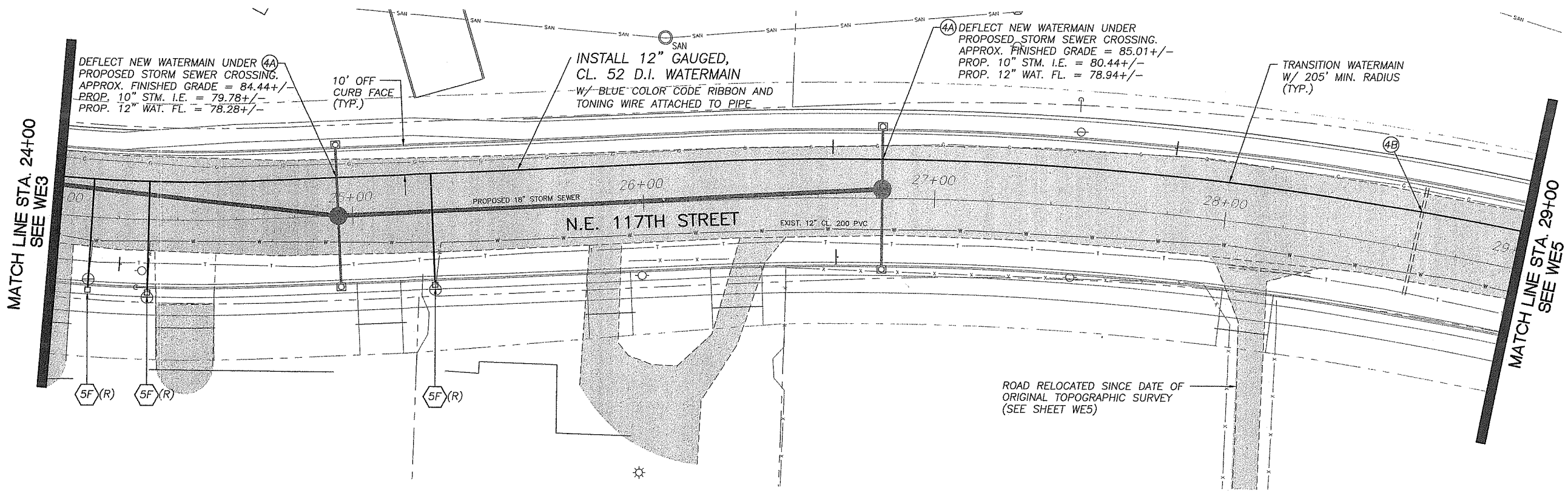

SEE SHEET WE7 FOR ADDITIONAL PROJECT CONSTRUCTION NOTES

WATER LEGEND

—W—	EXIST. WATER LINE
	EXIST. FIRE HYDRANT
W	EXIST. WATER METER
	EXIST. WATER METER
	PROP. SANITARY SEWER LINE
	PROP. STORM SEWER LINE W/ MANHOLE
	NEW WATER LINE
	NEW FIRE HYDRANT ASSEMBLY
	NEW WATER VALVE
	NEW BLOW-OFF
	NEW END CAP
	NEW THRUST BLOCK
	NEW TRANSITION SLEEVE
	NEW/RELOCATED WATER METER

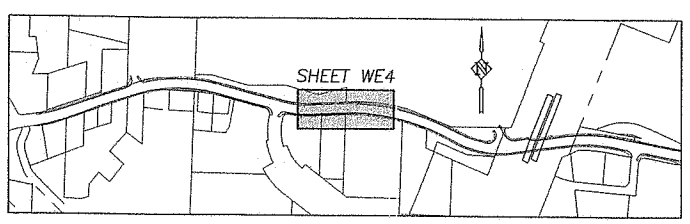

KEY MAP
N.T.S.

PROJECT CONSTRUCTION NOTES – SHEET WE4 ONLY

NO. OF LOCATIONS ON DWG. WE4 ONLY (SEE * NOTE:)	ASSEMBLY REFERENCE NUMBER (#) AND DESCRIPTION
0	(5N) 1 – 12" x 1" SERVICE CLAMP W/ 1" CORP. STOP (AS PER STD. WATER SERVICE).
0	(5N)(R) TRANSFER EXIST. WATER SERVICE LINE TO NEW TAP FOLLOWING TESTING AND ACCEPTANCE OF NEW MAIN. EXIST. WATER SERVICES OTHER THAN 1" P.E. CLASS 200 PIPE SHALL BE REPLACED AND NEW SERVICE EXTENDED TO THE METER. TRANSFER SERVICE AFTER
0	(5F) SATISFACTORY TESTING. FOR FAR SIDE AND EXTENDED SERVICES, CONTRACTOR SHALL BORE OR PUSH EACH 1" SERVICE LINE. EACH METER TO HAVE INDIVIDUAL SERVICE AS PER CPU STANDARD DETAIL. FOR RELOCATED METERS, LOCATE WATER SERVICE LINE AND
3	(5F)(R) CONNECT NEW SERVICE LINE, BYPASS AND ABANDON EXIST. SERVICE. 5N = NEAR SIDE SERVICE (ADJUST METER BOX TO FINISH GRADE AS NECESSARY) 5N(R) = NEAR SIDE SERVICE (RELOCATED METER BOX) 5F = FAR SIDE SERVICE (ADJUST METER BOX TO FINISH GRADE AS NECESSARY) 5F(R) = FAR SIDE SERVICE (RELOCATED METER BOX)

* NOTE: THE NO. OF LOCATIONS REFERS TO ONLY THE ITEMS IDENTIFIED WITH (#) AND DOES NOT INCLUDE ITEMS CALLED OUT INDEPENDENTLY ON THE PLAN.

Clark Public Utilities

APPROVED FOR CONSTRUCTION
CLARK PUBLIC UTILITIES - WATER
SIGNATURE_____ DATE_____

W.O.# 01-44106 R.I.O.# 215892

DESIGNED	JDB
DRAWN	JDB
CRP	320322
HOR.	1" = 20'
VERT.	N/A
DATE	10/1/04
DWG:	WE4
SHEET X OF X	

CALL 48 HOURS BEFORE YOU DIG 1-800-553-4344 "It's the Law" NORTHWEST UTILITIES NOTIFICATION CENTER

CHRISTOPHER E. ROBERTSON STATE OF WASHINGTON REGISTERED PROFESSIONAL ENGINEER
EXPIRES: 6/6/

Harper Houf Peterson Righellis Inc.
ENGINEERS • PLANNERS • SURVEYORS
1104 MAIN STREET, SUITE 100, VANCOUVER, WA 98660
TEL: 360.750.1131 www.hhpr.com FAX 360.750.1141

DESIGN & ENGINEERING DIVISION
DESIGN SECTION

N.W. 119TH/117TH STREET
WATER PLAN STA. 24+00 TO 29+00

proud past, promising future
CLARK COUNTY WASHINGTON

100% DESIGN REVIEW PLANS
NOT FOR CONSTRUCTION

SCALE IN FEET
20 0 20 40

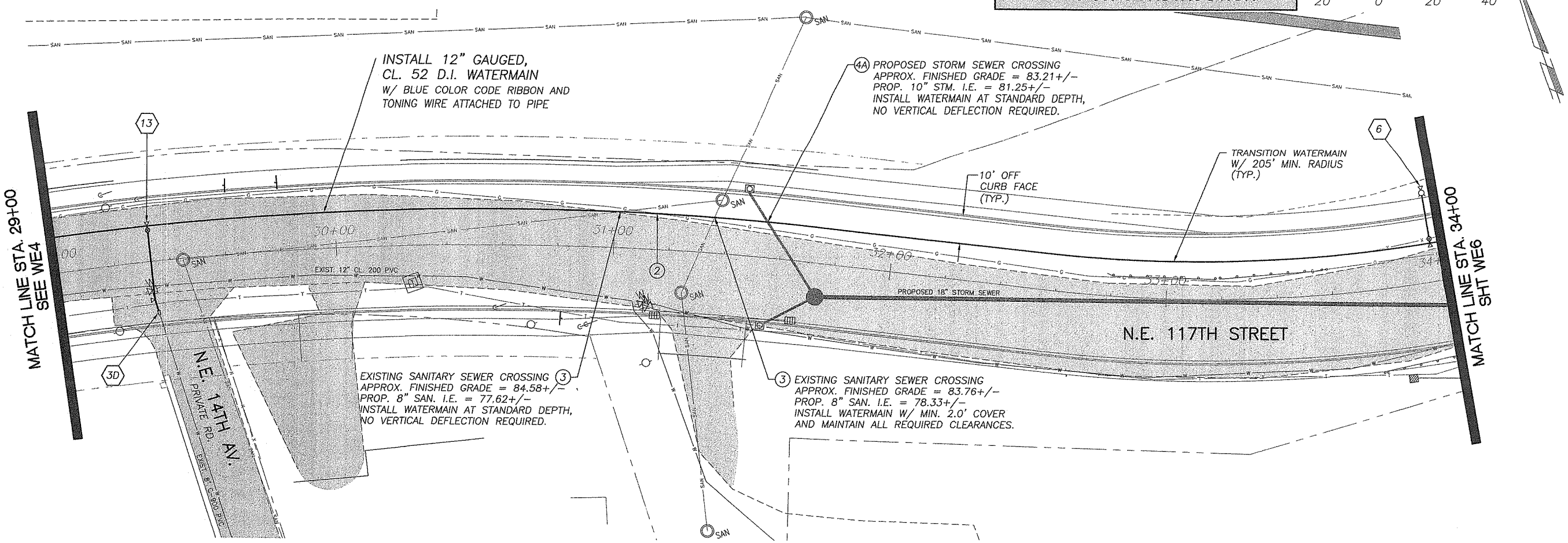

SEE SHEET WE7 FOR ADDITIONAL PROJECT CONSTRUCTION NOTES

WATER LEGEND

—W—	EXIST. WATER LINE
	EXIST. FIRE HYDRANT
W	EXIST. WATER METER
	EXIST. WATER METER
	PROP. SANITARY SEWER LINE
	PROP. STORM SEWER LINE W/ MANHOLE
	NEW WATER LINE
	NEW FIRE HYDRANT ASSEMBLY
	NEW WATER VALVE
	NEW BLOW-OFF
	NEW END CAP
	NEW THRUST BLOCK
	NEW TRANSITION SLEEVE
	NEW/RELOCATED WATER METER

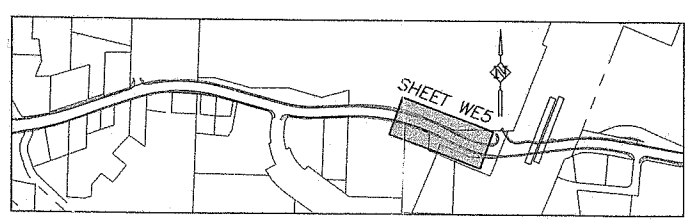

KEY MAP
N.T.S.

PROJECT CONSTRUCTION NOTES – SHEET WE5 ONLY

NO. OF LOCATIONS ON DWG. WE5 ONLY (SEE * NOTE:)	ASSEMBLY REFERENCE NUMBER (#) AND DESCRIPTION
0	(3A) UPON SATISFACTORY TESTING AND ACCEPTANCE OF NEW MAIN, CUT EXIST. PIPE AND CONNECT NEW CL. 52 D.I. TO EXIST. PIPE WITH:
0	(3B) 3A = 4" LONG PATTERN TRANSITION SLEEVE, M.J. (CL. 52 D.I./CL. 200 PVC) 3B = 6" LONG PATTERN TRANSITION SLEEVE, M.J. (CL. 52 D.I./CL. 200 PVC)
0	(3C) 3C = 8" LONG PATTERN TRANSITION SLEEVE, M.J. (CL. 52 D.I./CL. 200 PVC) 3D = 8" LONG PATTERN TRANSITION SLEEVE, M.J. (CL. 52 D.I./C-900 PVC)
1	(3D) ABANDON EXIST. LINE WITH END CAP AND THRUST BLOCK PER C.P.U. REQUIREMENTS.
1	(6) 1 – STD. FIRE HYDRANT ASSEMBLY W/ 12" x 6" C.I. TEE, M.J. x SIDE FLG., AND 6" G.V., FLG. x M.J. W/ MEGALUG RETAINER GLANDS (LOCATE HYDRANT AS DIRECTED BY THE INSPECTOR). ALL PIPE JOINTS FROM THE VALVE TO THE HYDRANT SHALL BE RESTRAINED PER THE STD. DETAIL. (R) = UPON SATISFACTORY TESTING AND ACCEPTANCE OF NEW MAIN, REMOVE EXIST. FIRE HYDRANT AND RETURN TO CLARK PUBLIC UTILITIES.
1	(13) 1 – 12" x 8" C.I. TEE, M.J. x SIDE FLG. 1 – 8" G.V., FLG. x M.J. W/ MEGALUG RETAINER GLANDS 1 – 8", 11 1/4° C.I. BEND, M.J. W/ MEGALUG RETAINER GLANDS 1 – VALVE BOX TOP W/ 6" PVC PIPE EXT. 2 – THRUST BLOCK APPROX. 30 L.F. 8" CL. 52 D.I. PIPE

* NOTE: THE NO. OF LOCATIONS REFERS TO ONLY THE ITEMS IDENTIFIED WITH (#) AND DOES NOT INCLUDE ITEMS CALLED OUT INDEPENDENTLY ON THE PLAN.

Clark Public Utilities

APPROVED FOR CONSTRUCTION
CLARK PUBLIC UTILITIES - WATER
SIGNATURE_____ DATE_____

W.O.# 01-44106 R.I.O.# 215892

DESIGNED	JDB
DRAWN	JDB
CRP	320322
HOR.	1" = 20'
VERT.	N/A
DATE	10/1/04
DWG.	WE5
SHEET X OF X	

CALL 48 HOURS BEFORE YOU DIG 1-800-553-4344 "It's the Law" NORTHWEST UTILITIES NOTIFICATION CENTER

CHRISTOPHER E. ROBERTSON STATE OF WASHINGTON 37313 REGISTERED PROFESSIONAL ENGINEER
EXPIRES: 6/6/

Harper Houf Peterson Righellis Inc.
ENGINEERS • PLANNERS • SURVEYORS
805 SE 136TH AVENUE, SUITE 100, VANCOUVER, WA 98683
TEL 360.750.1131 www.hhpr.com FAX 360.750.1141

DESIGN & ENGINEERING DIVISION
DESIGN SECTION

N.W. 119TH/117TH STREET
WATER PLAN STA. 29+00 TO 34+00

proud past, promising future
CLARK COUNTY WASHINGTON

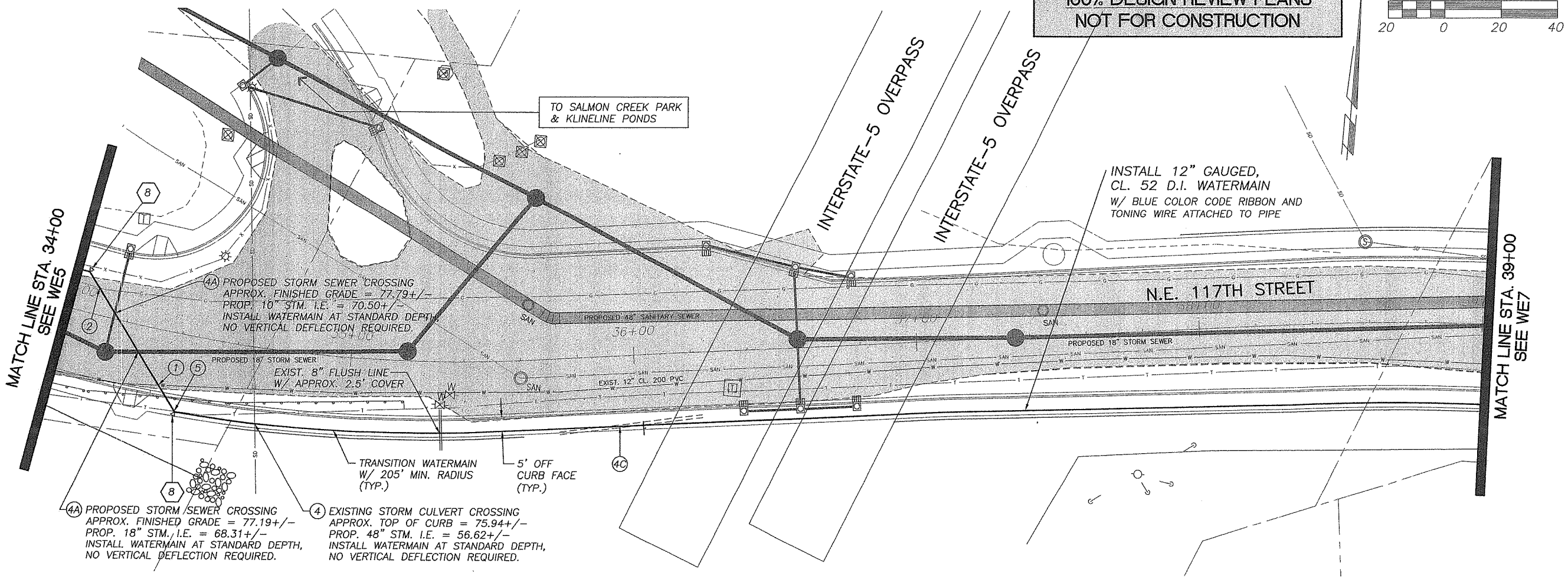

SEE SHEET WE7 FOR ADDITIONAL PROJECT CONSTRUCTION NOTES

WATER LEGEND

—W—	EXIST. WATER LINE
	EXIST. FIRE HYDRANT
W	EXIST. WATER METER
	EXIST. WATER METER
	PROP. SANITARY SEWER LINE
	PROP. STORM SEWER LINE W/ MANHOLE
	NEW WATER LINE
	NEW FIRE HYDRANT ASSEMBLY
	NEW WATER VALVE
	NEW BLOW-OFF
	NEW END CAP
	NEW THRUST BLOCK
	NEW TRANSITION SLEEVE
	NEW/RELOCATED WATER METER

PROJECT CONSTRUCTION NOTES – SHEET WE6 ONLY

NO. OF LOCATIONS ON DWG. WE6 ONLY (SEE * NOTE:)	ASSEMBLY REFERENCE NUMBER (#) AND DESCRIPTION
2	(8) 1 – 12", 45° C.I. BEND, M.J. W/ MEGALUG RETAINER GLANDS 1 – THRUST BLOCK

* NOTE: THE NO. OF LOCATIONS REFERS TO ONLY THE ITEMS IDENTIFIED WITH (#) AND DOES NOT INCLUDE ITEMS CALLED OUT INDEPENDENTLY ON THE PLAN.

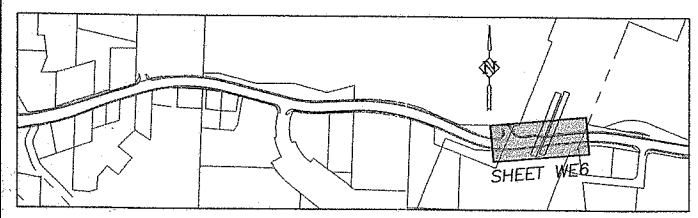

KEY MAP
N.T.S.

Clark Public Utilities

APPROVED FOR CONSTRUCTION
CLARK PUBLIC UTILITIES - WATER
SIGNATURE _____ DATE _____

W.O.# 01-44106 R.I.O.# 215892

DESIGNED	JDB
DRAWN	JDB
CRP	320322
HOR.	1" = 20'
VERT.	N/A
DATE	10/1/04
DWG:	WE6
SHEET X	OF X

CALL 48 HOURS BEFORE YOU DIG 1-800-553-4344 "It's the Law" NORTHWEST UTILITIES NOTIFICATION CENTER

CHRISTOPHER P. ROBERTSON STATE OF WASHINGTON 37012 REGISTERED PROFESSIONAL ENGINEER
EXPIRES: 9/6/

Harper Houf Peterson Righellis Inc.
ENGINEERS • PLANNERS • SURVEYORS
1104 Main Street, Suite 100, Vancouver, WA 98660
tel: 360.750.1141 fax: 360.750.1141
www.hhpr.com

DESIGN & ENGINEERING DIVISION
DESIGN SECTION

N.W. 119TH/117TH STREET
WATER PLAN STA. 34+00 TO 39+00

proud past, promising future
CLARK COUNTY WASHINGTON

100% DESIGN REVIEW PLANS
NOT FOR CONSTRUCTION

SCALE IN FEET
20 0 20 40

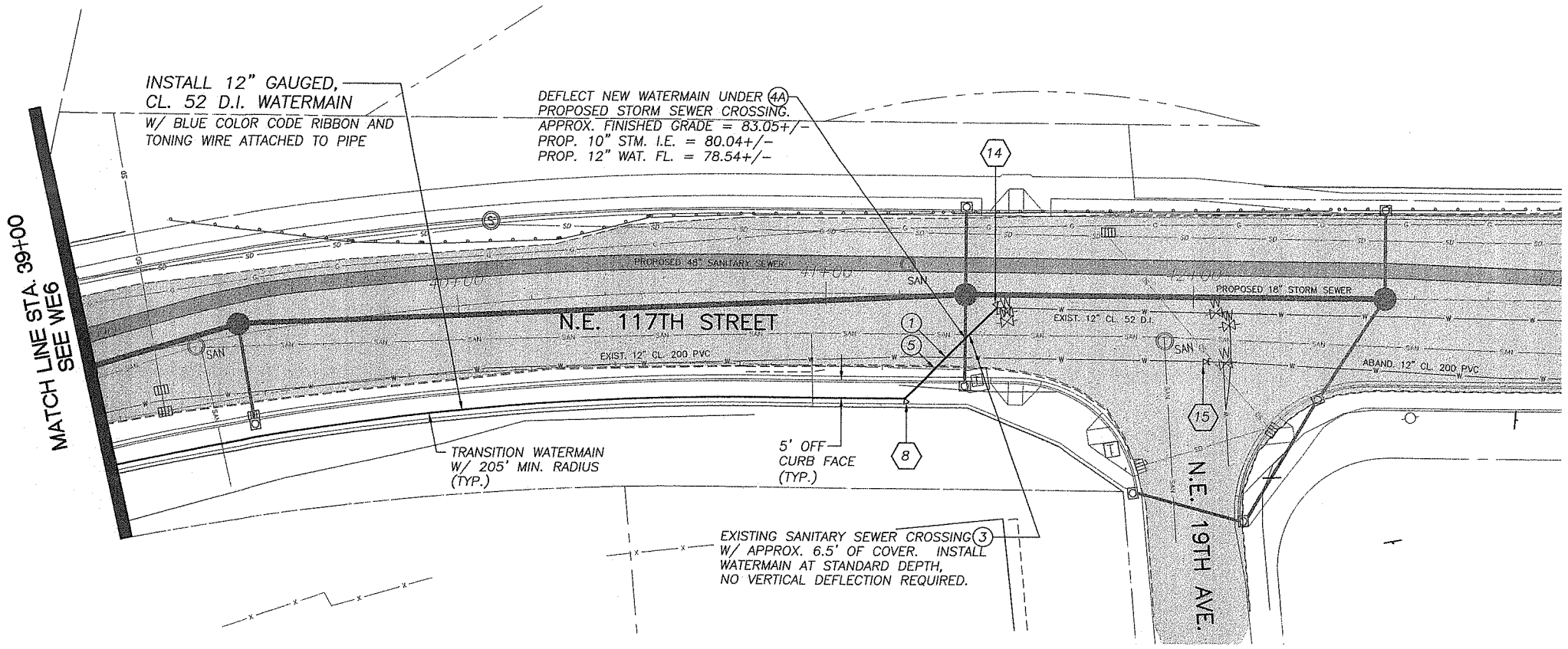

WATER LEGEND

- EXIST. WATER LINE
- EXIST. FIRE HYDRANT
- EXIST. WATER METER
- EXIST. WATER METER
- PROP. SANITARY SEWER LINE
- PROP. STORM SEWER LINE W/ MANHOLE
- NEW WATER LINE
- NEW FIRE HYDRANT ASSEMBLY
- NEW WATER VALVE
- NEW BLOW-OFF
- NEW END CAP
- NEW THRUST BLOCK
- NEW TRANSITION SLEEVE
- NEW/RELOCATED WATER METER

FOLLOWING NOTES APPLY TO SHEETS WE1 THROUGH WE7

ABANDONMENT NOTE:

WHENEVER A PIPE IS CUT AND NOT RECONNECTED, THE CUT ENDS SHALL BE CAPPED OR PLUGGED, AS DIRECTED BY INSPECTOR. ALL VALVE BOX TOPS ASSOCIATED WITH THE ABANDONED LINE SHALL BE REMOVED AND FILLED WITH CDF. THIS IS INCIDENTAL TO THE CONTRACTED WORK AND SHALL BE A PART OF OVERALL CONTRACT PRICE.

CROSSING NOTE:

MAINTAIN MINIMUM CLEARANCES AT ALL PROPOSED CROSSINGS AS PER GENERAL NOTES, DWG. WE8.

SERVICE METER NOTE:

ACTUAL LOCATION OF NEW WATER METERS SHALL BE DETERMINED BY THE INSPECTOR IN THE FIELD.

CAUTION NOTES @ CROSSINGS (#)

1. CAUTION: EXISTING WATERMAIN CROSSING (CPU)
2. CAUTION: EXISTING GAS CROSSING (NWNG)
3. CAUTION: EXISTING SANITARY SEWER CROSSING (HDSD)
3A. CAUTION: PROPOSED SANITARY SEWER CROSSING
3B. CAUTION: ABANDONED SANITARY SEWER CROSSING
4. CAUTION: EXISTING STORM SEWER CROSSING (CC)
4A. CAUTION: PROPOSED STORM SEWER CROSSING
4B. CAUTION: EXISTING STORM SEWER SCHEDULED TO BE ABANDONED
4C. CAUTION: EXISTING STORM SEWER SCHEDULED TO BE REMOVED
5. CAUTION: EXISTING TELEPHONE CROSSING (QWEST)

FOR ALL CROSSINGS:

VERIFY EXACT LOCATION AND ELEVATION PRIOR TO CONSTRUCTION. ANY CONFLICTS SHALL BE BROUGHT TO THE ATTENTION OF THE ENGINEER IMMEDIATELY.

MAINTAIN ALL MINIMUM CLEARANCES BETWEEN NEW WATERMAINS AND EXISTING UTILITIES AS IDENTIFIED IN THE PLANS, DESCRIBED IN THE GENERAL NOTES, AND REQUIRED BY THE STANDARD SPECIFICATIONS.

PLAN INDICATES MAINLINE CROSSINGS ONLY. CONTRACTOR TO VERIFY LOCATION OF LATERALS AS REQUIRED.

PROJECT CONSTRUCTION NOTES – SHEET WE7 ONLY

NO. OF LOCATIONS ON DWG. WE7 ONLY (SEE * NOTE:)	ASSEMBLY REFERENCE NUMBER (#) AND DESCRIPTION
1	(8) 1 – 12", 45° C.I. BEND, M.J. W/ MEGALUG RETAINER GLANDS 1 – THRUST BLOCK
1	(14) REMOVE EXIST. PERPENDICULAR BLOW-OFF ASSEMBLY INCLUDING MAIN CAP AND THRUST BLOCK AND CONNECT TO EXIST. 12" D.I. PIPE WITH: 1 – 12", 45° C.I. BEND, M.J. W/ MEGALUG RETAINER GLANDS 1 – THRUST BLOCK
1	(15) UPON SATISFACTORY TESTING AND ACCEPTANCE OF NEW WATERMAIN, CUT, CAP AND ABANDON EXIST. WATERMAIN WITH END CAP AND THRUST BLOCK PER C.P.U. REQUIREMENTS.

* NOTE: THE NO. OF LOCATIONS REFERS TO ONLY THE ITEMS IDENTIFIED WITH (#) AND DOES NOT INCLUDE ITEMS CALLED OUT INDEPENDENTLY ON THE PLAN.

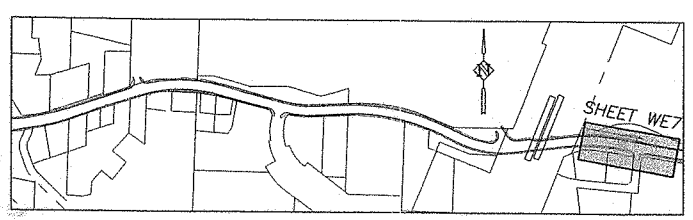

KEY MAP
N.T.S.

Clark Public Utilities

APPROVED FOR CONSTRUCTION
CLARK PUBLIC UTILITIES - WATER
SIGNATURE _____ DATE _____

W.O.# 01-44106 R.I.O.# 215892

DESIGNED	JDB
DRAWN	JDB
CRP	320322
HOR.	1" = 20'
VERT.	N/A
DATE	10/1/04
DWG:	WE7
SHEET X	OF X

CALL 48 HOURS BEFORE YOU DIG 1-800-553-4344 "It's the Law" NORTHWEST UTILITIES NOTIFICATION CENTER

CHRISTOPHER P. ROBERTSON STATE OF WASHINGTON 37913 REGISTERED PROFESSIONAL ENGINEER
EXPIRES: 6/6/

Harper Houf Peterson Righellis Inc.
HHPR
ENGINEERS · PLANNERS · SURVEYORS
700 W. Fourth Plain Blvd., P.O. Box 1776, Vancouver, WA 98660
TEL 360.750.1131 www.hhpr.com FAX 360.750.1141

DESIGN & ENGINEERING DIVISION
DESIGN SECTION

N.W. 119TH/117TH STREET
WATER PLAN STA. 39+00 TO E.O.P.

proud past, promising future
CLARK COUNTY WASHINGTON

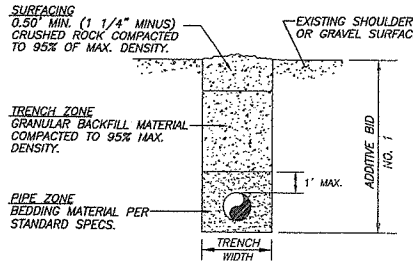

ROADWAY SHOULDERS, GRAVEL SURFACE

(TYPE 'B' RESTORATION)

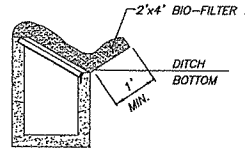

DITCH INLET PROTECTION

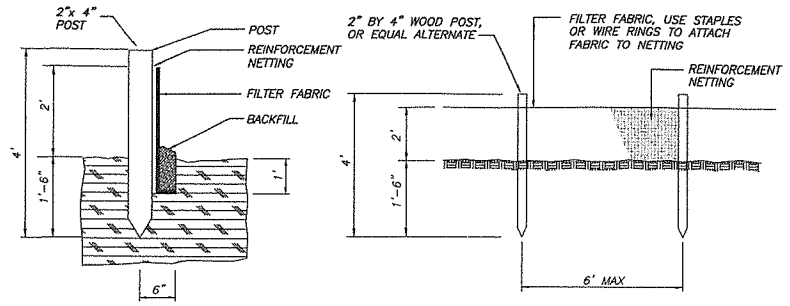

SILT FENCE INSTALLATION

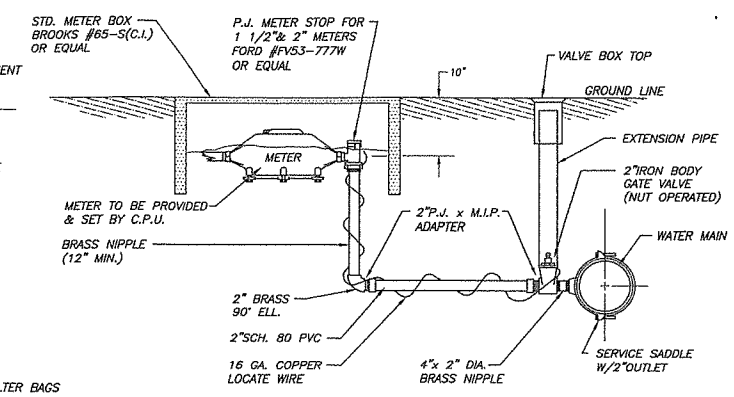

NOTES:

1. CONTRACTOR SHALL CONTACT P.U.D. CONSTRUCTION MANAGER'S OFFICE (944-8020) 48 HRS. PRIOR TO INSTALLING ANY STUBS.
2. CONTRACTOR IS HELD RESPONSIBLE TO AVOID CONFLICT WITH OTHER UTILITIES BY CO-ORDINATION OF LOCATION. "ONE-CALL" 696-4848.
3. NO CONNECTIONS WILL BE ALLOWED TO AN EXISTING SERVICE PRIOR TO AN APPROVED PURITY TEST. PURITY TEST SHALL PRECEDE PRESSURE TEST.
4. STUB SERVICES SHALL BE PRESSURE TESTED WITH THE MAIN LINE AND BE CAPABLE OF WITH-STANDING THE MAINS TEST PRESSURE.
5. APPROVED EQUAL APPLIES ON ALL MATERIAL CALL OUTS.
6. ALL COMPRESSION FITTINGS TO HAVE STAINLESS STEEL INSERTS.

STANDARD 1 1/2" & 2" WATER SERVICE

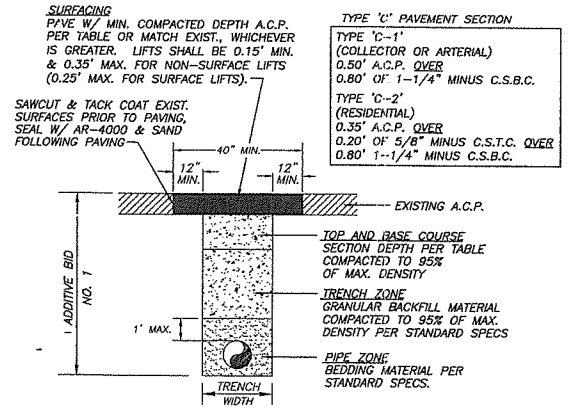

ASPHALT CONCRETE PAVEMENT

(TYPE 'C-1' & 'C-2' RESTORATION)

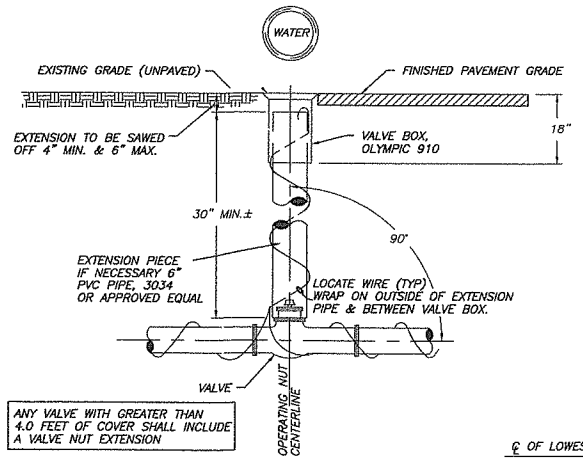

STANDARD VALVE BOX

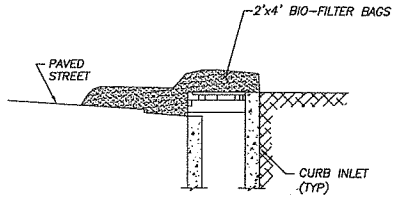

CURB INLET SILT BARRIER

FIRE HYDRANT NOTES:

1. FIRE HYDRANT INSTALLATIONS SHALL BE INSPECTED PRIOR TO BACKFILLING.
2. WHERE HYDRANTS SET BEHIND SIDEWALK, DISTANCE FROM BACK OF SIDEWALK TO HYDRANT ℄ SHALL BE 18" MIN., 24" MAX.
3. FIRE HYDRANTS SHALL BE SHOP PAINTED PRIOR TO INSTALLATION W/STANDARD A.W.W.A. GLOSS B, YELLOW
4. IN LIEU OF MEGA-LUG RESTRAINTS, USE CONCRETE THRUST BLOCK.

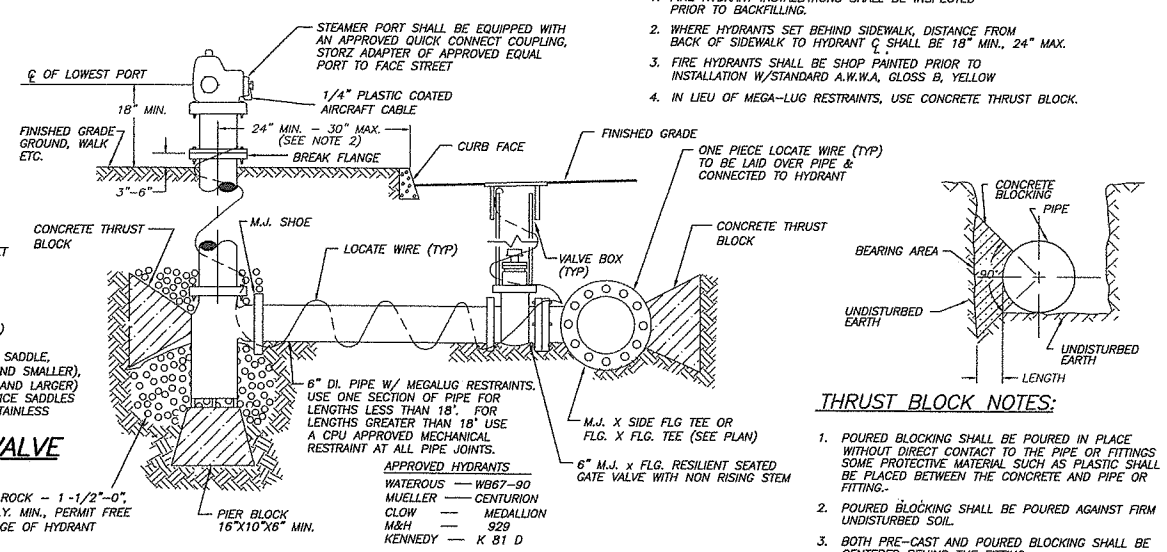

STANDARD FIRE HYDRANT ASSEMBLY

THRUST BLOCK NOTES:

1. POURED BLOCKING SHALL BE POURED IN PLACE WITHOUT DIRECT CONTACT TO THE PIPE OR FITTINGS SOME PROTECTIVE MATERIAL SUCH AS PLASTIC SHALL BE PLACED BETWEEN THE CONCRETE AND PIPE OR FITTING.-
2. POURED BLOCKING SHALL BE POURED AGAINST FIRM UNDISTURBED SOIL.
3. BOTH PRE-CAST AND POURED BLOCKING SHALL BE CENTERED BEHIND THE FITTING.
4. CONCRETE FOR ALL BLOCKING SHALL HAVE A 28-DAY MINIMUM COMPRESSIVE STRENGTH OF 2,500 P.S.I.
5. CONCRETE BLOCKING FOR VERTICAL BENDS SHALL BE PER APWA STD. PLAN NO. B-22.
6. LAYOUT TO BE APPROVED BY THE INSPECTOR PRIOR TO AND AFTER CONCRETE POUR.

TRENCH ZONE WIDTH
PIPE 8 IN. OR MORE = PIPE O.D. +2 FT.
PIPE 6 IN. OR LESS = PIPE O.D. +1 FT.
OR AS DIRECTED BY THE ENGINEER

TABLE APPLIES TO ALL TRENCH DETAILS ON THIS SHEET

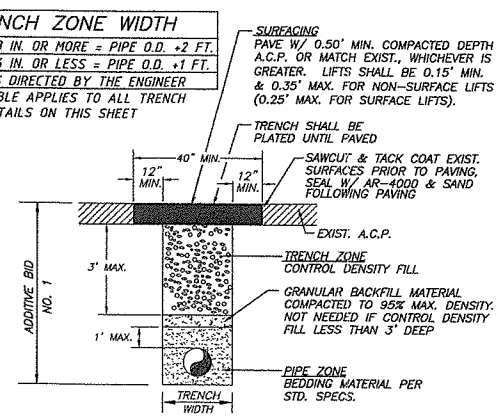

CONTROL DENSITY FILL -A.C.P.-

(TYPE 'D' RESTORATION)

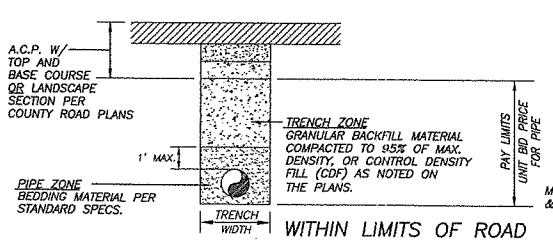

WITHIN LIMITS OF ROAD CONSTRUCTION/RECONSTRUCTION

PIPE BEDDING AND BACKFILL

(TYPE 'R' RESTORATION, WITHIN LIMITS OF COUNTY ROAD PROJECT)

TRENCHING NOTES:

1. SEE CLARK COUNTY OR WSDOT UTILITY PERMIT, WHICHEVER IS APPLICABLE, FOR ADDITIONAL TRENCH BACKFILL AND SURFACING REQUIREMENTS.
2. NATIVE MATERIALS MAY BE SUBSTITUTED FOR IMPORTED GRANULAR MATERIAL PROVIDING IT IS PRE-APPROVED BY THE COUNTY ENGINEER OR AUTHORIZED REPRESENTATIVE.
3. TRENCH EXCAVATION, BEDDING, AND BACKFILL FOR WATER MAINS SHALL BE IN ACCORDANCE WITH SECTION 7-10 OF THE MOST CURRENT STANDARD SPECIFICATIONS. BED PIPE PER SECTION 7-10.3(9) OF THE STANDARD SPECIFICATIONS.
4. IN THE TRENCH ZONE, USE METHOD C COMPACTION PER SECTION 2-03.3(14).

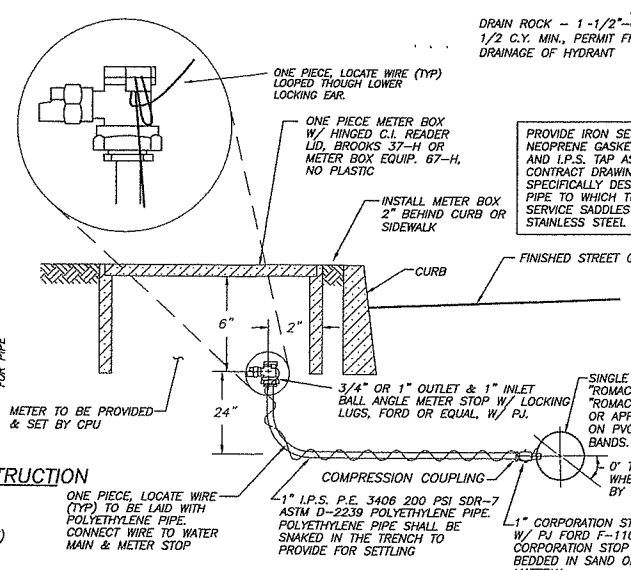

WATER SERVICE & MANUAL AIR RELEASE NOTES:

1. NO CONNECTIONS WILL BE ALLOWED TO AN EXISTING SERVICE PRIOR TO AN APPROVED PURITY TEST. PURITY TEST SHALL PRECEDE PRESSURE TEST.
2. STUB SERVICES SHALL BE PRESSURE TESTED WITH THE MAIN LINE AND BE CAPABLE OF WITH-STANDING THE MAINS TEST PRESSURE.
3. ALL COMPRESSION FITTINGS TO HAVE STAINLESS STEEL INSERTS.

STANDARD 3/4" & 1" WATER SERVICE

STANDARD MANUAL AIR RELEASE VALVE

PROVIDE IRON SERVICE SADDLES WITH NEOPRENE GASKETS CEMENTED IN PLACE AND I.P.S. TAP AS SPECIFIED ON THE CONTRACT DRAWINGS. SADDLES SHALL BE SPECIFICALLY DESIGNED FOR THE TYPE OF PIPE TO WHICH THEY ARE BEING INSTALLED. SERVICE SADDLES ON PVC PIPE SHALL HAVE STAINLESS STEEL BANDS.

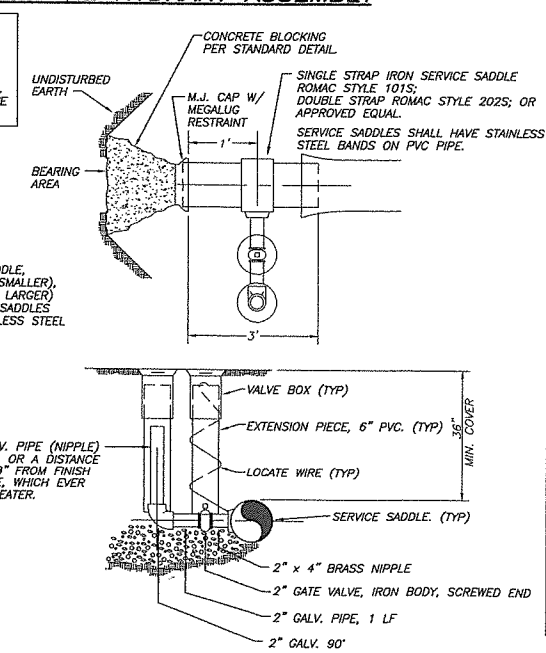

STANDARD BLOW-OFF ASSEMBLY (PERMANENT)

PIPE SIZE	HORIZ. FITTINGS (BENDS)	BEARING AREA (SF)	MINIMUM BLOCK SIZE (FT.)	VOL. OF BLOCKING (CF)	MINIMUM LENGTH OF BLOCKING (FT.-IN.)
4"	TEE	1.2	1.0' x 1.0'	0.3	0'-6"
	90°	1.7	1.5' x 1.5'	0.6	0'-6"
	45°	0.9	1.0' x 1.0'	0.3	0'-6"
	22-1/2°	0.5	1.0' x 1.0'	0.3	0'-6"
6"	TEE	2.4	1.5' x 1.5'	0.6	0'-6"
	90°	3.4	2.0' x 2.0'	1.4	0'-8"
	45°	1.9	1.5' x 1.5'	0.6	0'-6"
	22-1/2°	1.0	1.0' x 1.0'	0.3	0'-6"
	11-1/4°	0.5	1.0' x 1.0'	0.3	0'-6"
8"	TEE	4.0	2.0' x 2.0'	1.5	0'-8"
	90°	5.6	2.5' x 2.5'	2.8	0'-10"
	45°	3.1	2.0' x 2.0'	1.5	0'-8"
	22-1/2°	1.6	1.5' x 1.5'	0.7	0'-6"
	11-1/4°	0.8	1.0' x 1.0'	0.3	0'-6"
10"	TEE	6.2	2.5' x 2.5'	3.0	0'-10"
	90°	8.7	3.0' x 3.0'	4.5	1'-0"
	45°	4.8	2.5' x 2.5'	2.5	0'-8"
	22-1/2°	2.5	2.0' x 2.0'	1.4	0'-6"
	11-1/4°	1.3	1.5' x 1.5'	0.8	0'-6"
12"	TEE	8.6	3.0' x 3.0'	5.0	1'-0"
	90°	12.2	3.5' x 3.5'	7.8	1'-3"
	45°	6.6	2.5' x 2.5'	3.0	0'-9"
	22-1/2°	3.4	2.0' x 2.0'	1.5	0'-6"
	11-1/4°	1.7	1.5' x 1.5'	0.8	0'-6"
16"	TEE	15.2	4.0' x 4.0'	12	1'-3"
	90°	21.4	4.5' x 4.5'	17	1'-6"
	45°	11.6	3.5' x 3.5'	7.5	1'-0"
	22-1/2°	5.9	2.5' x 2.5'	2.7	0'-6"
	11-1/4°	3.0	2.0' x 2.0'	1.7	0'-6"
18"	TEE	19.1	4.0' x 4.0'	12	1'-3"
	90°	27.1	5.0' x 5.0'	23	1'-9"
	45°	14.7	4.0' x 4.0'	12	1'-2"
	22-1/2°	7.5	3.0' x 3.0'	4.7	0'-8"
	11-1/4°	3.8	2.0' x 2.0'	1.9	0'-6"
SOIL BEARING = 2000 LB/FT					11/98

STANDARD THRUST BLOCK

GENERAL NOTES:

1. ALL CONSTRUCTION MATERIALS AND WORKMANSHIP SHALL CONFORM TO THE CLARK PUBLIC UTILITIES (CPU) WATER CONSTRUCTION SPECIFICATIONS, STANDARD DETAILS, AND THE 2002 EDITION OF THE "STANDARD SPECIFICATIONS FOR ROAD AND BRIDGE CONSTRUCTION" PUBLISHED BY WASHINGTON STATE DEPARTMENT OF TRANSPORTATION (WSDOT).
2. A CPU WATER UTILITY INSPECTOR SHALL BE AT THE JOB SITE DURING CONSTRUCTION OF ALL WATER FACILITIES. CONTACT 360-992-8019 TWO WORKING DAYS PRIOR TO COMMENCING WORK.
3. WORK WITHIN COUNTY RIGHT-OF-WAY SHALL CONFORM WITH CLARK COUNTY PUBLIC WORKS UTILITY PERMIT REQUIREMENTS AND DETAILS. WORK WITHIN STATE RIGHT-OF-WAY SHALL CONFORM TO WSDOT UTILITY PERMIT REQUIREMENTS AND DETAILS.
4. WATER MAIN SHALL BE PVC C-900, P.C. 150 OR AS SPECIFIED ON PLANS.
5. INSTALL WATERMAIN WITH 3.0 FEET OF MINIMUM COVER UNLESS OTHERWISE NOTED. DEPTH MAY INCREASE AT UTILITY AND CULVERT CROSSINGS. (REFER TO NOTE 12)
6. THE LOCATION OF THE UTILITIES SHALL BE VERIFIED IN ADVANCE TO ALLOW FOR ALIGNMENT ADJUSTMENTS. CALL UTILITY LOCATES TWO (2) WORKING DAYS PRIOR TO CONSTRUCTION (1-800-553-4344).
7. A TAPPING COMPANY APPROVED BY CLARK PUBLIC UTILITIES SHALL BE USED TO MAKE ALL TAPS.
8. LOCATE WIRE SHALL BE NON-COATED, NO. 14 GA. SOFT DRAWN SOLID COPPER.
9. DRY CALCIUM HYPO CHLORIDE IN TABLET FORM, FAST DISSOLVING, WITH 65% MIN. AVAILABLE CHLORINE SHALL BE USED TO CHLORINATE ALL NEW MAINS. THE NUMBER OF TABLETS TO BE APPLIED PER 20 FOOT LENGTH OF PIPE SHALL BE AS FOLLOWS:

PIPE SIZE	NUMBER OF TABLETS
4"	2
6"	3
8"	4
10"	6
12"	8

10. ACTUAL ROAD ALIGNMENTS MAY VARY FROM RIGHT-OF-WAY INDICATED. THE CONTRACTOR SHALL VERIFY THE PROPOSED PIPE ALIGNMENT AND REPORT DIFFERENCES TO THE CPU INSPECTOR. ALL ALIGNMENT CHANGES MUST BE APPROVED BY THE CPU INSPECTOR PRIOR TO INSTALLATION.
11. DRIVEWAYS DISTURBED BY CONSTRUCTION SHALL BE RESTORED BY THE CONTRACTOR TO "LIKE" OR BETTER CONDITION. REFER TO PLAN FOR APPROXIMATE LOCATIONS AND TYPES.
12. CONTRACTOR SHALL VERIFY EXISTING UTILITY CULVERTS, CONDUITS AND LINE LOCATION PRIOR TO CONSTRUCTION. DUE TO FIELD CONDITIONS, THE CONTRACTOR SHALL FIELD ADJUST THE VERTICAL AND HORIZONTAL ALIGNMENT OF THE WATER MAIN TO CLEAR THE UTILITY IN CONFLICT AND PROVIDE THE MIN. 3.0 FEET OF COVER AS APPROVED BY THE INSPECTOR. ALL CULVERTS WHICH ARE DISTURBED BY CONSTRUCTION SHALL BE RESTORED BY THE CONTRACTOR IN ACCORDANCE WITH THE SPECIFICATIONS.
13. FENCES DISTURBED BY CONSTRUCTION SHALL BE RESTORED BY THE CONTRACTOR TO "LIKE" OR BETTER CONDITION.
14. CONTRACTOR SHALL VERIFY EXISTING SIGN AND MAILBOX LOCATIONS PRIOR TO CONSTRUCTION. SIGNS & MAILBOXES THAT ARE DISTURBED BY CONSTRUCTION SHALL BE RELOCATED BACK FROM EDGE OF PAVEMENT, 1.0 FEET CLEAR OF WATERMAIN. ANY SIGNS OR MAILBOXES DAMAGED SHALL BE REPAIRED OR REPLACED AS PER THE SPECIFICATIONS.
15. ALL WATER SERVICES, BLOW-OFF ASSEMBLIES, AIR RELEASE VALVES, FIRE HYDRANT ASSEMBLIES, VALVE BOXES, AND THRUST BLOCKING SHALL BE INSTALLED AS PER THE STANDARD SPECIFICATIONS AND DETAILS.
16. THE EXACT LOCATION OF ALL POLES HAVE NOT BEEN INDICATED. ONLY THOSE POLES THAT MAY BE IN CONFLICT WITH THE WATERMAIN ALIGNMENT HAVE BEEN INDICATED. SHIFT WATERMAIN TO AVOID CONFLICT WITH POLE.
17. THE LOCATIONS OF ALL EXISTING UTILITIES ARE FOR INFORMATIONAL PURPOSES ONLY. MANY LOCATIONS ARE AS PER SCHEMATIC RECORD DRAWINGS. THE PLANS INDICATE ONLY TELEPHONE AND POWER. UTILITY SERVICE CROSSINGS HAVE NOT BEEN IDENTIFIED. THE CURRENT AND EXACT LOCATIONS OF FACILITIES MUST BE VERIFIED PRIOR TO CONSTRUCTION. THE CONTRACTOR PERFORMING THE WORK SHALL COMPLY WITH THE PROVISIONS OF CHAPTER 19.122 RCW, INCLUDING NOTIFICATION OF ALL OWNERS OF UNDERGROUND FACILITIES AT LEAST 48 BUSINESS DAY HOURS PRIOR TO EXCAVATION. CALL 1-800-553-4344 FOR UTILITY LOCATE SERVICE.
18. WATERMAINS BEING INSTALLED NEAR TELEPHONE/CABLE COMMUNICATIONS SHALL HAVE A MINIMUM 12" HORIZONTAL AND 6" VERTICAL CLEARANCE.
19. WATERMAINS BEING INSTALLED NEAR UNDERGROUND POWER LINES SHALL HAVE A MINIMUM 12" HORIZONTAL AND 6" VERTICAL CLEARANCE.
20. REQUIRED SEPARATION BETWEEN WATER LINES AND SANITARY SEWER LINES SHALL BE AS FOLLOWS:

HORIZONTAL SEPARATION (PARALLEL)
A MINIMUM HORIZONTAL SEPARATION OF TEN (10) FEET (MEASURED EDGE TO EDGE) BETWEEN SANITARY SEWER LINES AND WATER LINES SHALL BE MAINTAINED WHENEVER POSSIBLE. WHEN CONDITIONS PREVENT THE MINIMUM TEN (10) FOOT HORIZONTAL SEPARATION, THE ENGINEER SHALL BE NOTIFIED.

VERTICAL SEPARATION (PERPENDICULAR)
WATER LINES CROSSING SANITARY SEWER LINES SHALL BE LAID ABOVE THE SEWER LINES TO PROVIDE A SEPARATION OF AT LEAST 18 INCHES BETWEEN THE INVERT OF THE WATER PIPE AND THE CROWN OF THE SANITARY SEWER PIPE. A LENGTH OF WATER PIPE SHALL BE CENTERED AT THE POINT OF CROSSING AND SHALL BE THE LONGEST STANDARD LENGTH AVAILABLE FROM THE MANUFACTURER.

21. VALVE SHALL BE 2" SQUARE OPERATING NUT OR AS SPECIFIED ON PLANS.
22. WHENEVER A PIPE IS CUT AND NOT RECONNECTED, THE CUT ENDS SHALL BE CAPPED OR PLUGGED, AS DIRECTED BY THE CPU INSPECTOR.

EROSION CONTROL NOTES:

1. ALL EXPOSED SOILS SHALL BE STABILIZED, IN A TIMELY MANNER, BY THE APPLICATION OF BEST MANAGEMENT PRACTICES, INCLUDING BUT NOT LIMITED TO SOD, SEED, OR OTHER VEGETATION, PLASTIC COVERINGS, MULCHING, OR APPLICATION OF CRUSHED AGGREGATE ON THOSE AREAS TO BE PAVED.
2. WHEN EXCAVATION OCCURS IN ROADSIDE DITCHES, EXCAVATE AND KEY INTO DITCH ONE STRAW BALE PER 100' OF DITCH, OR WHERE NOTED ON THE PLANS. REMOVE SILT WHEN IT IS EVEN WITH THE TOP OF THE BALE. REPLACE OR ADD BALES AS NECESSARY TO PROPERLY FILTER THE STORM WATER.
3. INSTALL BIOFILTER BAGS (POLYESTER FABRIC PILLOW (ASTM-D191 OR EQUAL) FILLED W/ 15-16 LBS. OF WOOD CHIPS) AT EACH INLET. REMOVE SILT AND ADD BIOFILTER BAGS AS NECESSARY TO PROPERLY FILTER THE STORM WATER.
4. IF SEDIMENT IS TRANSPORTED ONTO THE ROAD SURFACE, THE ROADS SHALL BE CLEANED THOROUGHLY AT THE END OF THE WORKDAY, OR MORE IF NECESSARY. SIGNIFICANT SOIL DEPOSITS SHALL BE REMOVED FROM THE ROAD BY SHOVELING OR SWEEPING.
5. THE LENGTH OF TRENCH OPEN AT ONE TIME SHALL BE MINIMIZED AND WHERE CONSISTENT WITH SAFETY AND SPACE CONSIDERATIONS, EXCAVATED MATERIALS SHALL BE PLACED ON THE UPHILL SIDE OF THE TRENCH.
6. CONSTRUCTION EROSION CONTROL SHALL BE AS REQUIRED AND CONFORMING WITH THE CLARK COUNTY DRAINAGE AND EROSION CONTROL ORDINANCE. REFER TO THE CLARK COUNTY DEPARTMENT OF PUBLIC WORKS STANDARD EROSION CONTROL DETAILS.

Clark Public Utilities

W.O.# 01-44106 R.I.O.# 215892

DESIGNED	JDB
DRAWN	JDB
CRP	320322
HOR.	N/A
VERT.	N/A
DATE	10/1/04
DWG:	WE8
SHEET X OF X	

CALL 48 HOURS BEFORE YOU DIG 1-800-553-4344 "It's the Law" NORTHWEST UTILITIES NOTIFICATION CENTER

CHRISTOPHER R. ROBERTSON STATE OF WASHINGTON 37312 REGISTERED PROFESSIONAL ENGINEER
EXPIRES: 8/6/

Harper Houf Peterson Righellis Inc.
ENGINEERS • PLANNERS • SURVEYORS
1204 MAIN STREET, SUITE 100, VANCOUVER, WA 98660
TEL: 360.750.1141 FAX: 360.750.1141
www.hhpr.com

DIVISION
DESIGN & ENGINEERING DIVISION
DESIGN SECTION

N.W. 119TH/117TH STREET
STANDARD WATER DETAILS

CLARK COUNTY WASHINGTON
proud past, promising future

SALMON CREEK WASTEWATER MANAGEMENT SYSTEM
PHASE 4 EXPANSION
KLINELINE FORCE MAIN SEGMENT A
GRAVITY INTERCEPTOR SEGMENT 2

NOT TO SCALE

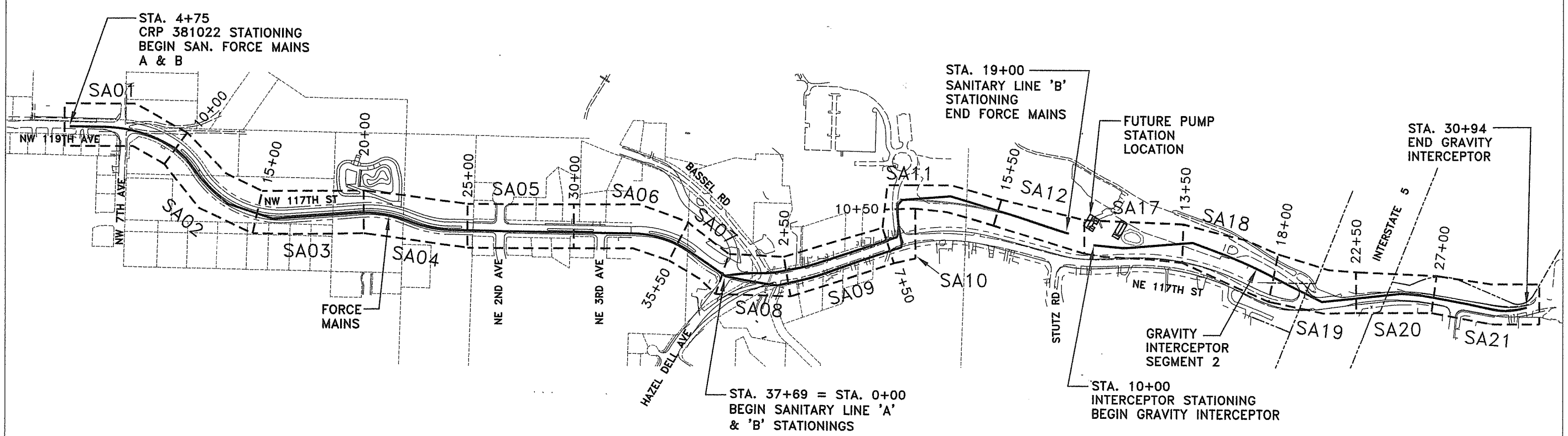

SALMON CREEK WASTE WATER MANAGEMENT SYSTEM

Approved for construction: _____

JOHN PETERSON, P.E.
CAPITAL PROJECTS MGR.

Date

DESIGNED	TK
DRAWN	AF
CRP	381022
HOR.	AS SHOWN
VERT.	AS SHOWN
DATE	10-01-04
DWG.	SA1A
SHEET	OF

CALL 48 HOURS BEFORE YOU DIG
1-800-553-4344
"It's the Law"
NORTHWEST UTILITIES NOTIFICATION CENTER

Mackay & Sposito, Inc.
ENGINEERS SURVEYORS PLANNERS
12005 SE 32nd Circle, Suite 100, Vancouver, WA 98683
(360) 695-3411 (503) 289-9729 FULL FAX (360) 695-6803

DESIGN & ENGINEERING DIVISION

NW 119TH/117TH STREET
PROPOSED SANITARY SEWER SYSTEM

proud past, promising future
CLARK COUNTY
WASHINGTON

DATE PLOTTED: Oct 01, 2004 – 2:58pm M&S DRAWING FILE: W:\13800\13866\4-DESIGN\DWGS\Task 3 Force Main 7th-119th\FINAL DESIGN – TASK 3.2\13866 index_TC3.2.dwg

NOTES:

1. ALL TOPOGRAPHY AND UTILITY TIES ARE AS OBTAINED FROM CLARK COUNTY EXCEPT AS NOTED BELOW.
2. PROPOSED AND EXISTING WATER LINES ARE AS OBTAINED FROM CLARK PUBLIC UTILITIES

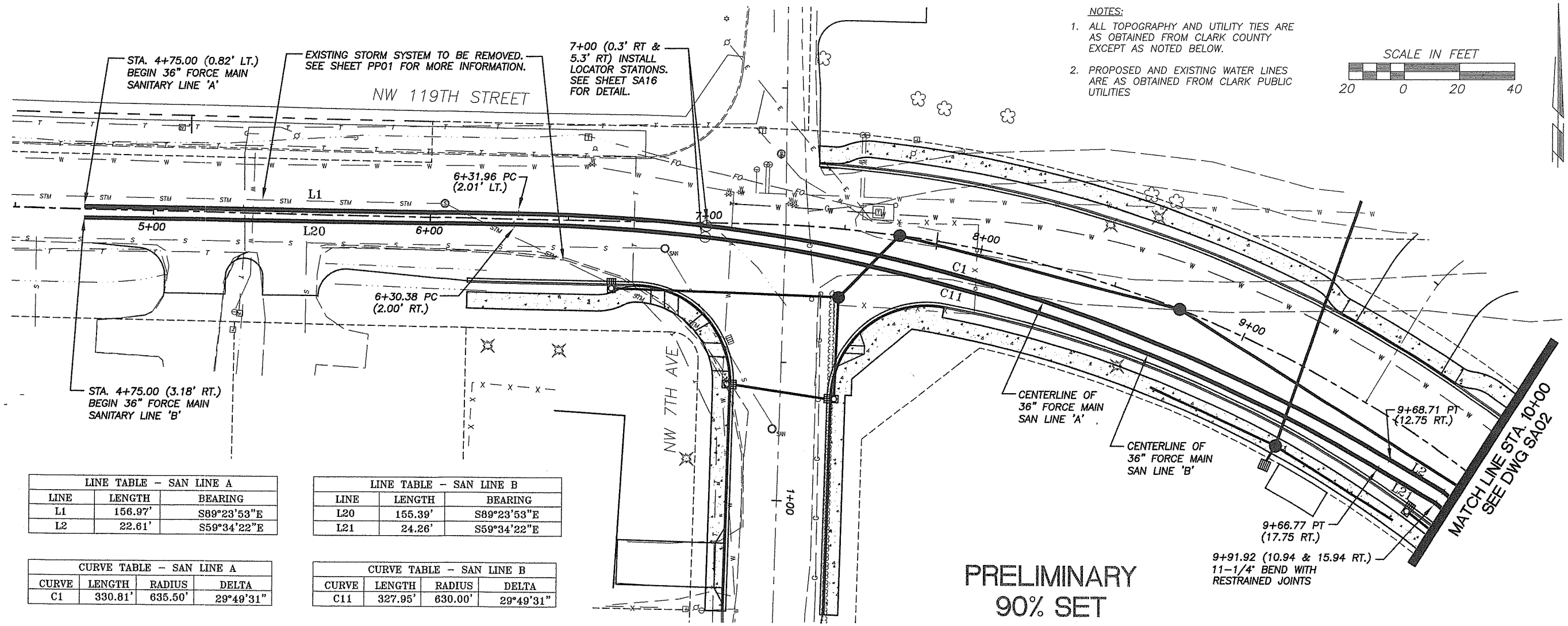

LINE TABLE – SAN LINE A		
LINE	LENGTH	BEARING
L1	156.97'	S89°23'53"E
L2	22.61'	S59°34'22"E

LINE TABLE – SAN LINE B		
LINE	LENGTH	BEARING
L20	155.39'	S89°23'53"E
L21	24.26'	S59°34'22"E

CURVE TABLE – SAN LINE A			
CURVE	LENGTH	RADIUS	DELTA
C1	330.81'	635.50'	29°49'31"

CURVE TABLE – SAN LINE B			
CURVE	LENGTH	RADIUS	DELTA
C11	327.95'	630.00'	29°49'31"

PRELIMINARY
90% SET

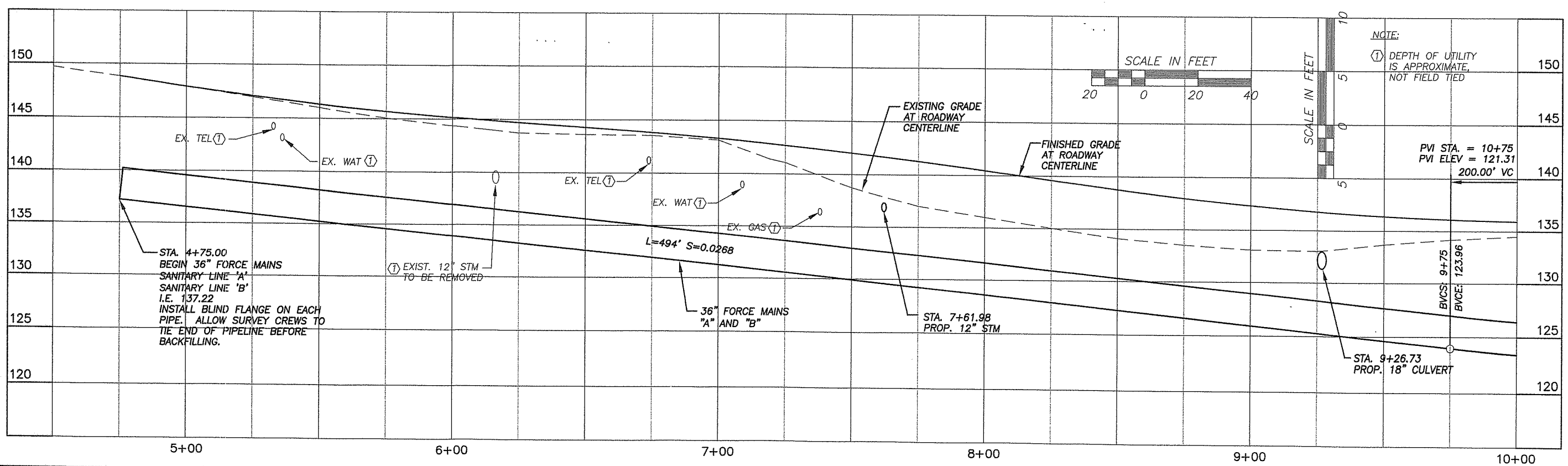

DESIGNED TK/SN
DRAWN AF
CRP 381022
HOR. AS SHOWN
VERT. AS SHOWN
DATE 10-01-04
DWG: SA01
SHEET X OF X

CALL 48 HOURS BEFORE YOU DIG 1-800-553-4344 "It's the Law" NORTHWEST UTILITIES NOTIFICATION CENTER

STATE OF WASHINGTON MICHAEL A. MOE REGISTERED PROFESSIONAL ENGINEER 22994 EXPIRES: JUNE 22, 2005

MacKay & Sposito, Inc. M&S
ENGINEERS SURVEYORS PLANNERS
7525 SE 15TH CENTER DRIVE, SUITE 1-B VANCOUVER, WA 98663
(360) 892-9411 (503) 620-8127 FAX (360) 892-9423

DESIGN & ENGINEERING DIVISION

NW 119TH/117TH STREET
KLINELINE FORCE MAIN SEGMENT A

proud past, promising future
CLARK COUNTY WASHINGTON

DATE PLOTTED: Oct 01, 2004 – 2:53pm M&S DRAWING FILE: W:\13860\13866\4-DESIGN\DWGS\Task 3 Force Main 7th-119th\FINAL DESIGN – TASK 3.2\13866 plans_TC3.2.dwg

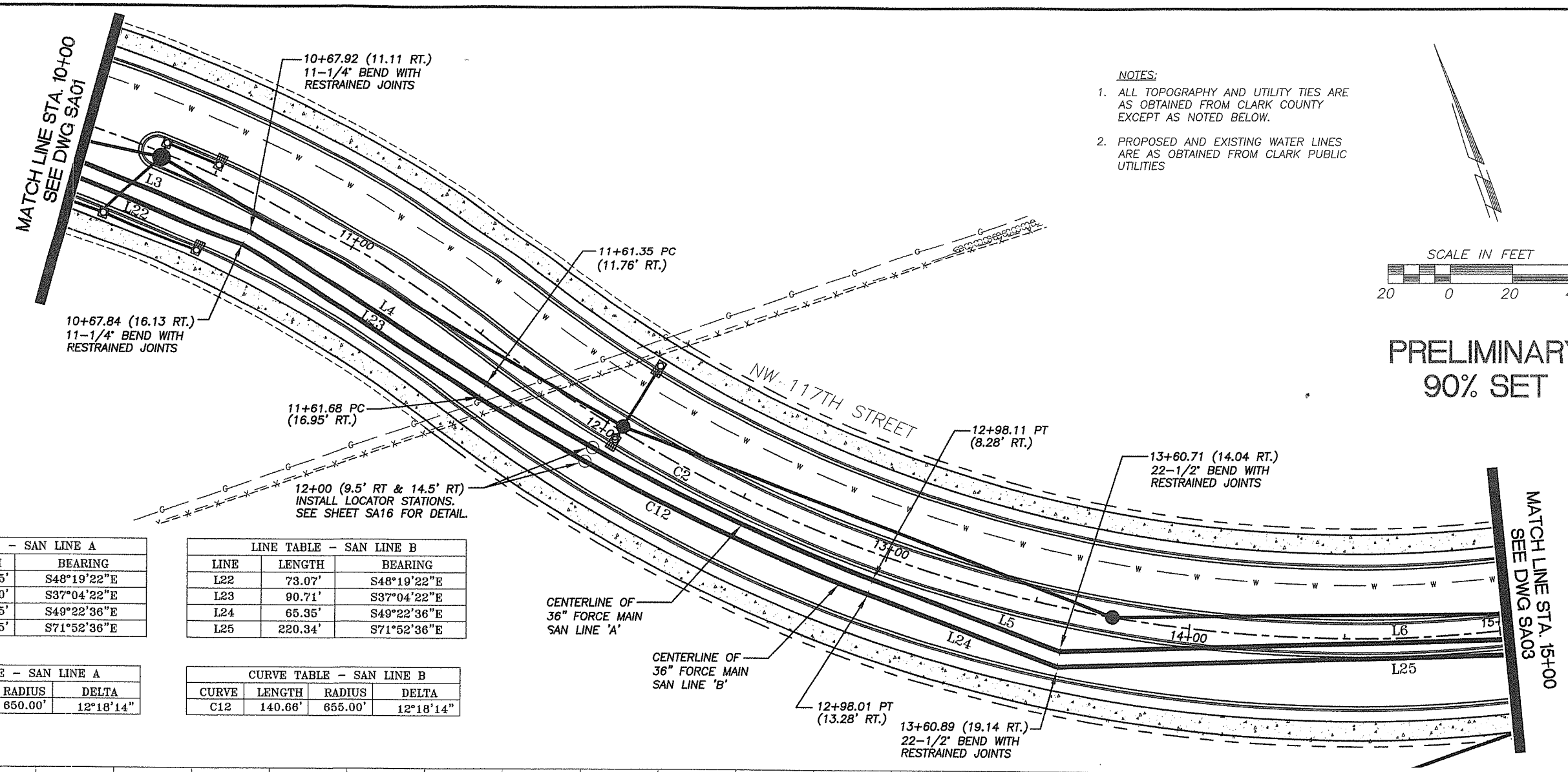

NOTES:

1. ALL TOPOGRAPHY AND UTILITY TIES ARE AS OBTAINED FROM CLARK COUNTY EXCEPT AS NOTED BELOW.
2. PROPOSED AND EXISTING WATER LINES ARE AS OBTAINED FROM CLARK PUBLIC UTILITIES

SCALE IN FEET
20 0 20 40

PRELIMINARY
90% SET

LINE TABLE – SAN LINE A		
LINE	LENGTH	BEARING
L3	74.05'	S48°19'22"E
L4	91.20'	S37°04'22"E
L5	64.35'	S49°22'36"E
L6	218.35'	S71°52'36"E

LINE TABLE – SAN LINE B		
LINE	LENGTH	BEARING
L22	73.07'	S48°19'22"E
L23	90.71'	S37°04'22"E
L24	65.35'	S49°22'36"E
L25	220.34'	S71°52'36"E

CURVE TABLE – SAN LINE A			
CURVE	LENGTH	RADIUS	DELTA
C2	139.58'	650.00'	12°18'14"

CURVE TABLE – SAN LINE B			
CURVE	LENGTH	RADIUS	DELTA
C12	140.66'	655.00'	12°18'14"

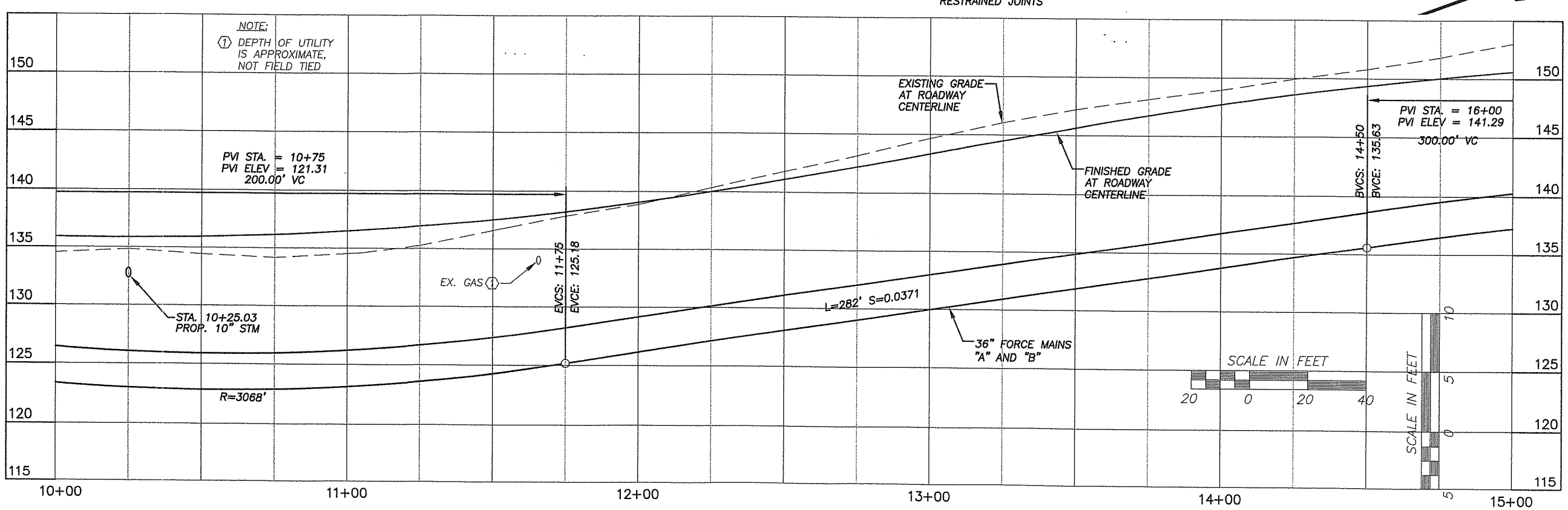

DESIGNED TK/SN
DRAWN AF
CRP 381022
HOR. AS SHOWN
VERT. AS SHOWN
DATE 10-01-04
DWG. SA02
SHEET X OF X

CALL 48 HOURS BEFORE YOU DIG
1-800-553-4344
"It's the Law"
NORTHWEST UTILITIES NOTIFICATION CENTER

STATE OF WASHINGTON
DONALD L. MOSER
22594
REGISTERED PROFESSIONAL ENGINEER
EXPIRES: JUNE 29, 2005

MacKay & Sposito, Inc.
ENGINEERS SURVEYORS PLANNERS
10800 NE 8th, SUITE 600, BELLEVUE, WA 98004
(425) 635-0480 FAX (425) 635-0423
(503) 684-3117 (503) 289-9172 FIELD

DESIGN & ENGINEERING DIVISION

NW 119TH/117TH STREET
KLINELINE FORCE MAIN SEGMENT A

proud past, promising future
CLARK COUNTY
WASHINGTON

DATE PLOTTED: Oct 01, 2004 – 2:53pm M&S DRAWING FILE: W:\13800\13866\4-DESIGN\DWGS\Task 3 Force Main 7th-119th\FINAL DESIGN – TASK 3.2\13866 plans_TC3.2.dwg

NOTES:

1. ALL TOPOGRAPHY AND UTILITY TIES ARE AS OBTAINED FROM CLARK COUNTY EXCEPT AS NOTED BELOW.
2. PROPOSED AND EXISTING WATER LINES ARE AS OBTAINED FROM CLARK PUBLIC UTILITIES

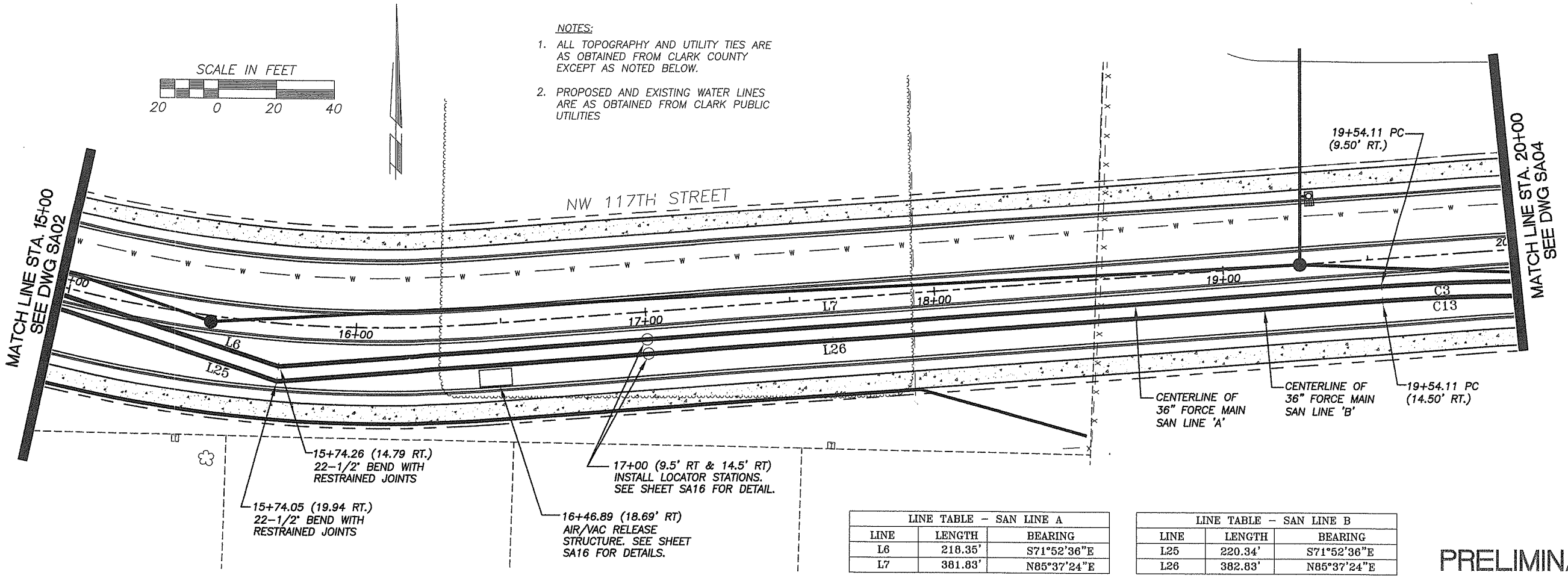

LINE TABLE – SAN LINE A		
LINE	LENGTH	BEARING
L6	218.35'	S71°52'36"E
L7	381.83'	N85°37'24"E

LINE TABLE – SAN LINE B		
LINE	LENGTH	BEARING
L25	220.34'	S71°52'36"E
L26	382.83'	N85°37'24"E

CURVE TABLE – SAN LINE A			
CURVE	LENGTH	RADIUS	DELTA
C3	243.79'	606.50'	23°01'50"

CURVE TABLE – SAN LINE B			
CURVE	LENGTH	RADIUS	DELTA
C13	241.78'	601.50'	23°01'50"

PRELIMINARY
90% SET

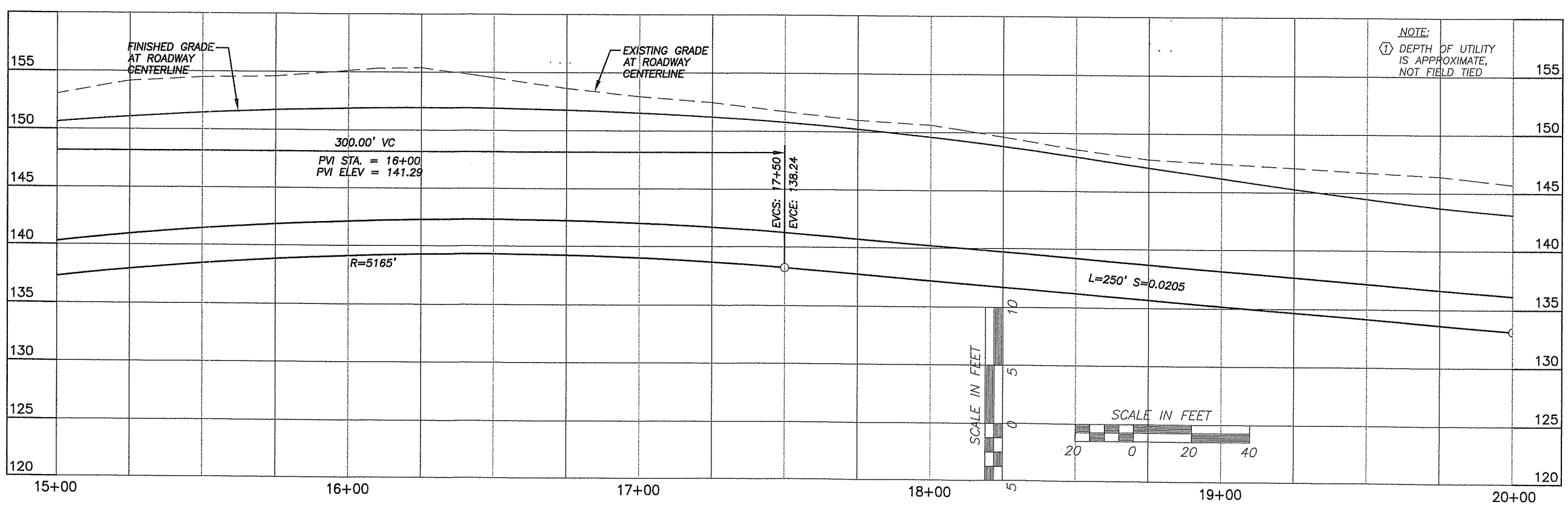

NOTE:
① DEPTH OF UTILITY IS APPROXIMATE, NOT FIELD TIED

DESIGNED TK/SN
DRAWN AF
CRP 381022
HOR. AS SHOWN
VERT. AS SHOWN
DATE 10-01-04
DWG: SA03
SHEET X OF X

CALL 48 HOURS BEFORE YOU DIG 1-800-553-4344 "It's the Law" NORTHWEST UTILITIES NOTIFICATION CENTER

STATE OF WASHINGTON MICHAEL D. MOE 23994 REGISTERED PROFESSIONAL ENGINEER
EXPIRES: JUNE 29, 2005

Mackay & Sposito, Inc. M&S
ENGINEERS SURVEYORS PLANNERS
2309 SE 164TH CENTER DRIVE, SUITE 100 VANCOUVER, WA 98683
(360) 896-9111 FAX: (360) 896-9123

DESIGN & ENGINEERING DIVISION

NW 119TH/117TH STREET
KLINELINE FORCE MAIN SEGMENT A

proud past, promising future
CLARK COUNTY
WASHINGTON

DATE PLOTTED: Oct 01, 2004 – 2:54pm M&S DRAWING FILE: W:\13800\13866\4-DESIGN\DWGS\Task 3 Force Main 7th-119th\FINAL DESIGN – TASK 3.2\13866 plans_TC12.dwg

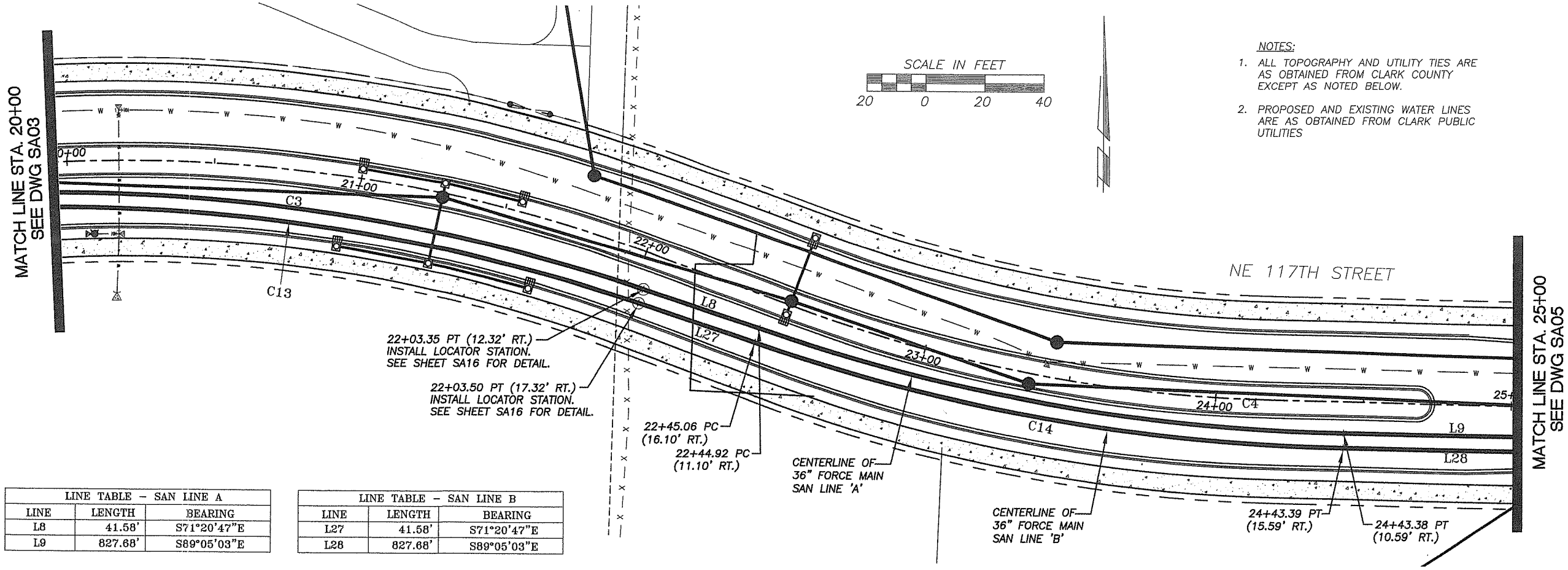

NOTES:

1. ALL TOPOGRAPHY AND UTILITY TIES ARE AS OBTAINED FROM CLARK COUNTY EXCEPT AS NOTED BELOW.
2. PROPOSED AND EXISTING WATER LINES ARE AS OBTAINED FROM CLARK PUBLIC UTILITIES

LINE TABLE – SAN LINE A		
LINE	LENGTH	BEARING
L8	41.58'	S71°20'47"E
L9	827.68'	S89°05'03"E

LINE TABLE – SAN LINE B		
LINE	LENGTH	BEARING
L27	41.58'	S71°20'47"E
L28	827.68'	S89°05'03"E

CURVE TABLE – SAN LINE A			
CURVE	LENGTH	RADIUS	DELTA
C3	243.79'	606.50'	23°01'50"
C4	201.69'	651.50'	17°44'16"

CURVE TABLE – SAN LINE B			
CURVE	LENGTH	RADIUS	DELTA
C13	241.78'	601.50'	23°01'50"
C14	203.24'	656.50'	17°44'16"

PRELIMINARY
90% SET

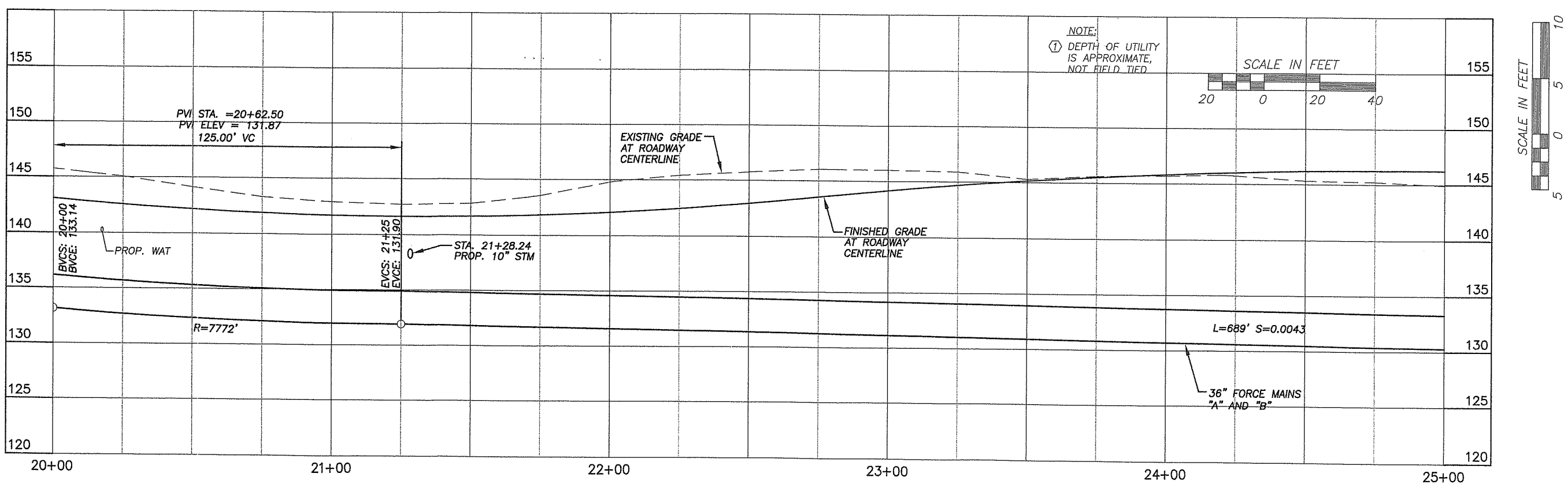

DESIGNED TK/SN
DRAWN AF
CRP 381022
HOR. AS SHOWN
VERT. AS SHOWN
DATE 10-01-04
DWG: SA04
SHEET X OF X

CALL 48 HOURS BEFORE YOU DIG
1-800-553-4344
"It's the Law"
NORTHWEST UTILITIES NOTIFICATION CENTER

STATE OF WASHINGTON
DONALD J. MOTT
22594
REGISTERED PROFESSIONAL ENGINEER
EXPIRES: JUNE 29, 2005

MacKay & Sposito, Inc.
ENGINEERS SURVEYORS PLANNERS
14800 S.E. 38th STREET, BELLEVUE, WASHINGTON 98006
(425) 865-3411 FAX (425) 865-9693
(503) 293-8154 FAX

DESIGN & ENGINEERING DIVISION

NW 119TH/117TH STREET
KLINELINE FORCE MAIN SEGMENT A

proud past, promising future
CLARK COUNTY
WASHINGTON

DATE PLOTTED: Oct 01, 2004 – 2:54pm M&S DRAWING FILE: W:\13800\13866\4-DESIGN\DWGS\Task 3 Force Main 7th-119th\FINAL DESIGN – TASK 3.2\13866 plans_TC3.2.dwg

NOTES:

1. ALL TOPOGRAPHY AND UTILITY TIES ARE AS OBTAINED FROM CLARK COUNTY EXCEPT AS NOTED BELOW.
2. PROPOSED AND EXISTING WATER LINES ARE AS OBTAINED FROM CLARK PUBLIC UTILITIES

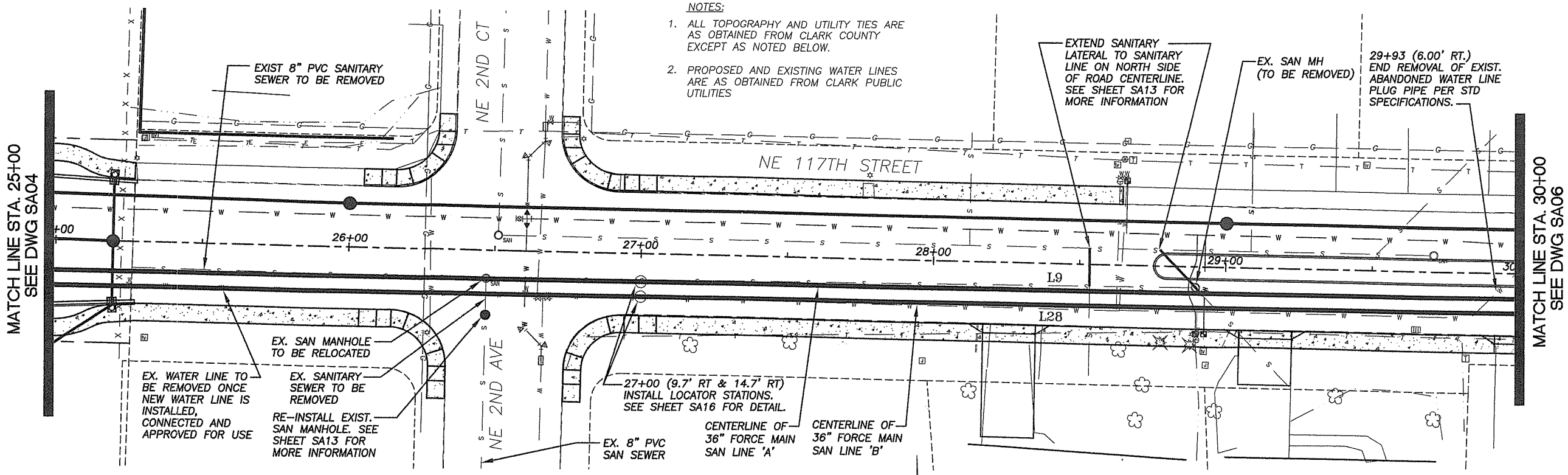

PRELIMINARY
90% SET

LINE TABLE – SAN LINE A		
LINE	LENGTH	BEARING
L9	827.68'	S89°05'03"E

LINE TABLE – SAN LINE B		
LINE	LENGTH	BEARING
L28	827.68'	S89°05'03"E

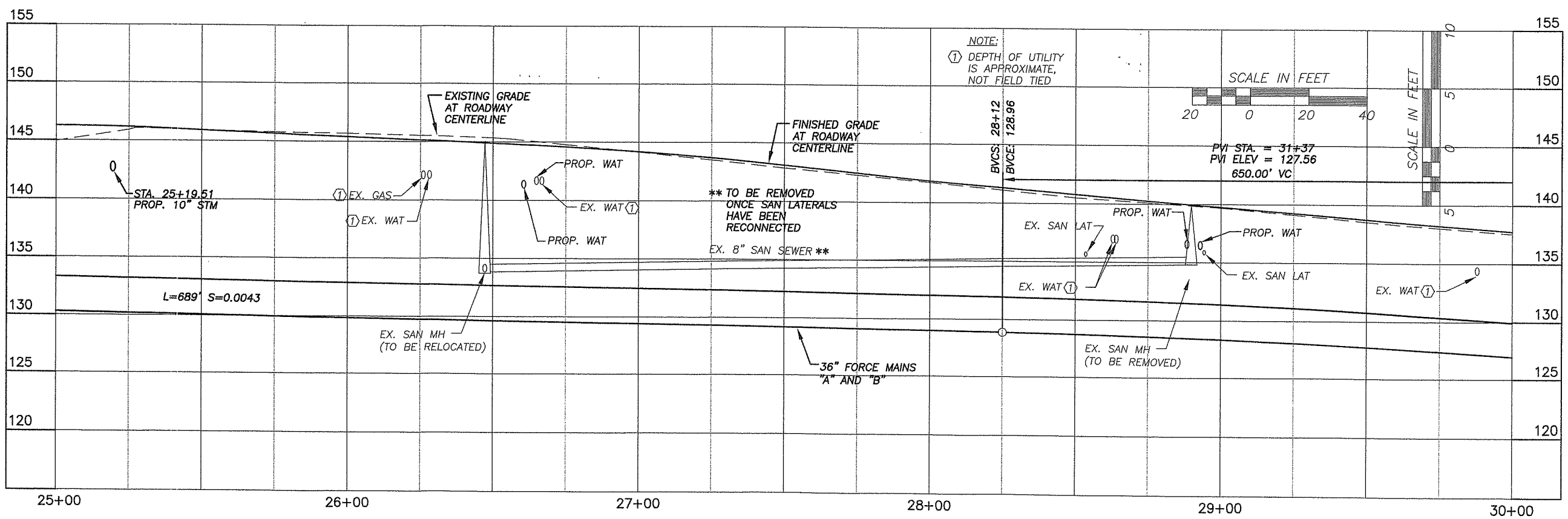

DESIGNED TK/SN
DRAWN AF
CRP 381022
HOR. AS SHOWN
VERT. AS SHOWN
DATE 10-01-04
DWG: SA05
SHEET X OF X

CALL 48 HOURS BEFORE YOU DIG
1-800-553-4344
"It's the Law"
NORTHWEST UTILITIES NOTIFICATION CENTER

STATE OF WASHINGTON
DONALD MORGAN
22094
REGISTERED PROFESSIONAL ENGINEER
EXPIRES: JUNE 22, 2005

MacKay & Sposito, Inc.
ENGINEERS SURVEYORS PLANNERS
1325 S.E. TECH CENTER DR., VANCOUVER, WA 98683
(360) 695-3411 (503) 235-4212 FIELD FAX (360) 816-9163
www.mackay-sposito.com

DESIGN & ENGINEERING DIVISION

NW 119TH/117TH STREET
KLINELINE FORCE MAIN SEGMENT A

proud past, promising future
CLARK COUNTY
WASHINGTON

DATE PLOTTED: Oct 01, 2004 – 2:55pm M&S DRAWING FILE: W:\13800\13866\4-DESIGN\DWGS\Task 3 Force Main 7th-119th\FINAL DESIGN – TASK 3.2\13866 plans_TC3.2.dwg

NOTES:

1. ALL TOPOGRAPHY AND UTILITY TIES ARE AS OBTAINED FROM CLARK COUNTY EXCEPT AS NOTED BELOW.
2. PROPOSED AND EXISTING WATER LINES ARE AS OBTAINED FROM CLARK PUBLIC UTILITIES

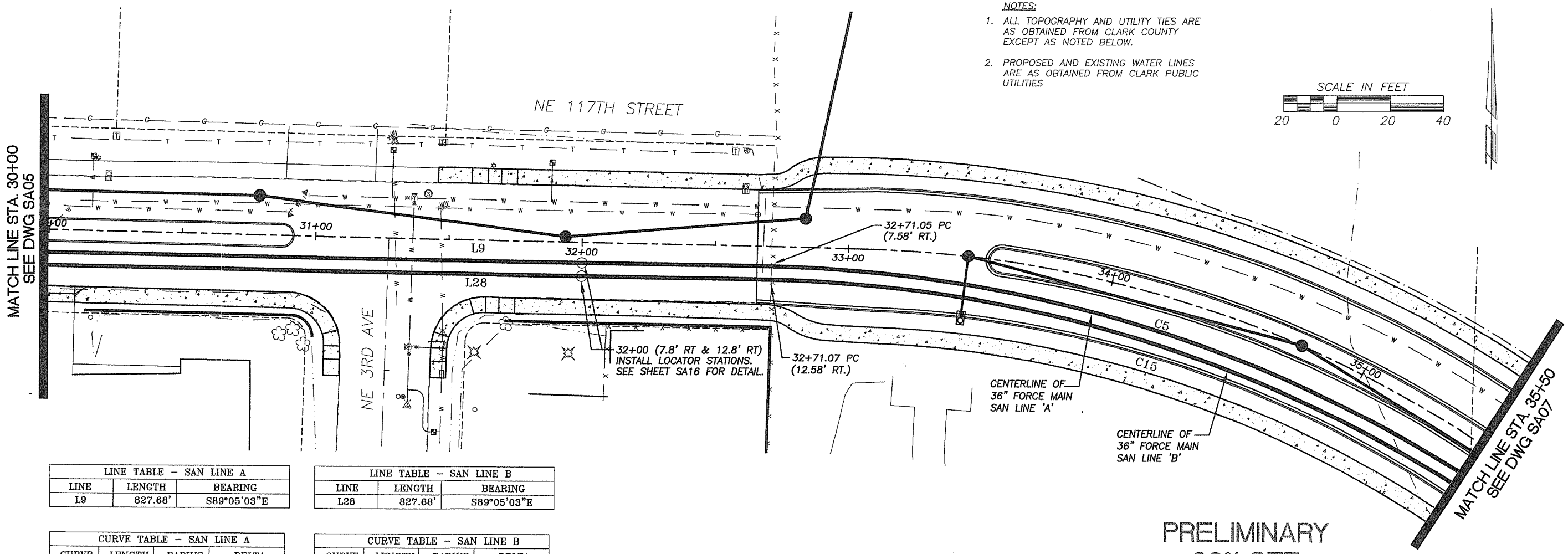

PRELIMINARY
90% SET

LINE TABLE – SAN LINE A		
LINE	LENGTH	BEARING
L9	827.68'	S89°05'03"E

LINE TABLE – SAN LINE B		
LINE	LENGTH	BEARING
L28	827.68'	S89°05'03"E

CURVE TABLE – SAN LINE A			
CURVE	LENGTH	RADIUS	DELTA
C5	298.65'	507.00'	33°45'00"

CURVE TABLE – SAN LINE B			
CURVE	LENGTH	RADIUS	DELTA
C15	295.70'	502.00'	33°45'00"

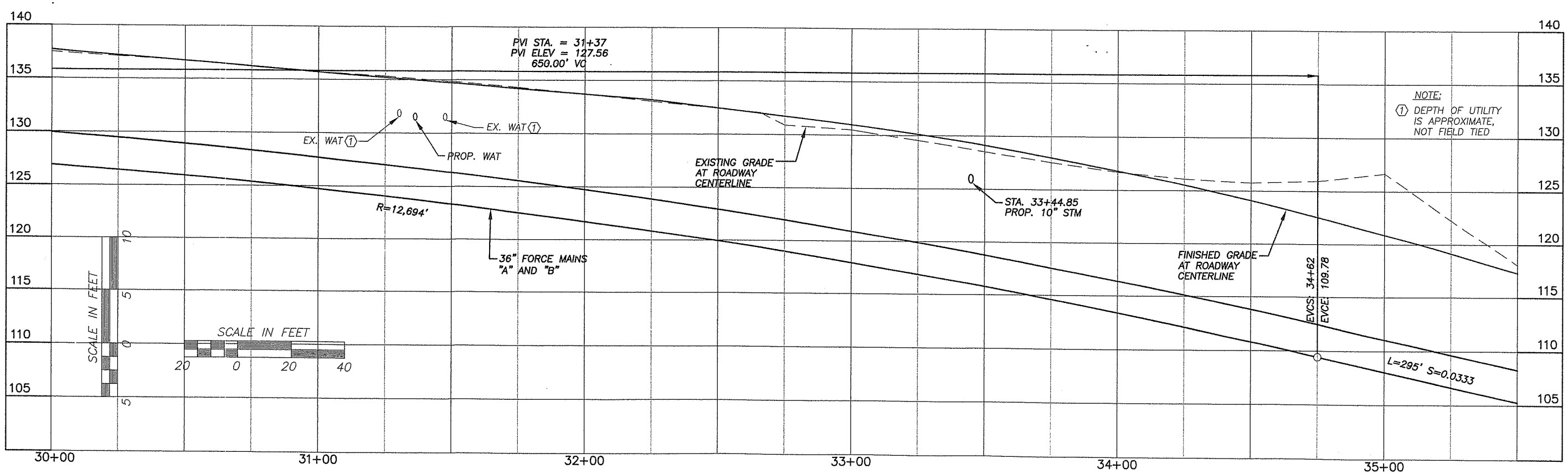

DESIGNED TK/SN
DRAWN AF
CRP 381022
HOR. AS SHOWN
VERT. AS SHOWN
DATE 10-01-04
DWG: SA06
SHEET X OF X

CALL 48 HOURS BEFORE YOU DIG
1-800-553-4344
"It's the Law"
NORTHWEST UTILITIES NOTIFICATION CENTER

REGISTERED PROFESSIONAL ENGINEER
STATE OF WASHINGTON
EXPIRES: JUNE 2, 2005

MacKay & Sposito, Inc.
ENGINEERS SURVEYORS PLANNERS
1325 S.E. TECH CENTER DR., SUITE 100, VANCOUVER, WA 98683
(360) 695-3411 (503) 289-9729 FTLD FAX (360) 695-6033

DESIGN & ENGINEERING DIVISION

NW 119TH/117TH STREET
KLINELINE FORCE MAIN SEGMENT A

proud past, promising future
CLARK COUNTY
WASHINGTON

DATE PLOTTED: Oct 01, 2004 – 2:55pm M&S DRAWING FILE: W:\13800\13866\4-DESIGN\DWGS\Task 3 Force Main 7th-119th\FINAL DESIGN – TASK 3.2\13866 plans_TC1.2.dwg

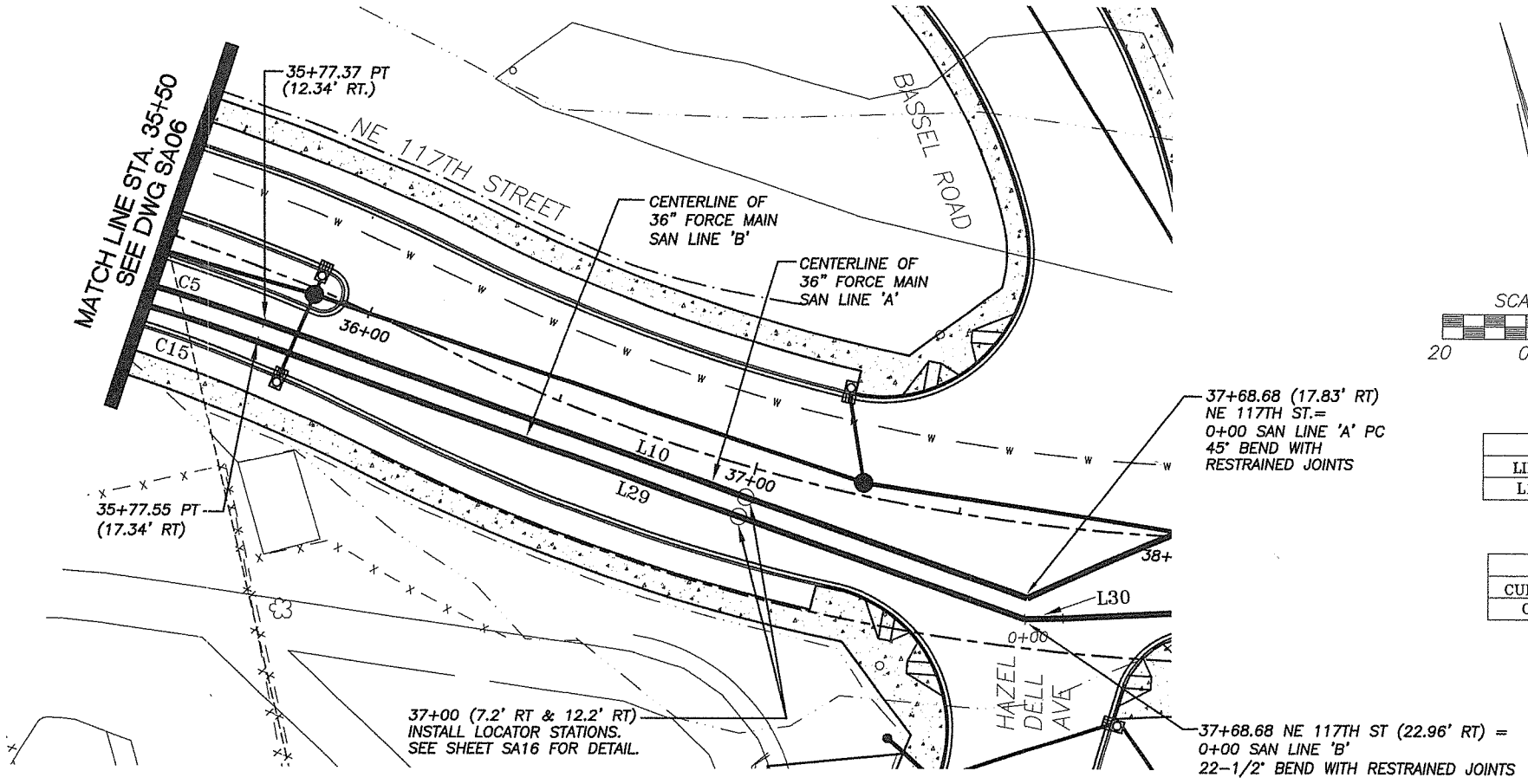

NOTES:

1. ALL TOPOGRAPHY AND UTILITY TIES ARE AS OBTAINED FROM CLARK COUNTY EXCEPT AS NOTED BELOW.
2. PROPOSED AND EXISTING WATER LINES ARE AS OBTAINED FROM CLARK PUBLIC UTILITIES

SCALE IN FEET

20 0 20 40

LINE TABLE – SAN LINE A		
LINE	LENGTH	BEARING
L10	194.64'	S55°20'03"E

LINE TABLE – SAN LINE B		
LINE	LENGTH	BEARING
L29	195.79'	S55°20'03"E
L30	9.09'	S76°32'43"E

CURVE TABLE – SAN LINE A			
CURVE	LENGTH	RADIUS	DELTA
C5	298.65'	507.00'	33°45'00"

CURVE TABLE – SAN LINE B			
CURVE	LENGTH	RADIUS	DELTA
C15	295.70'	502.00'	33°45'00"

PRELIMINARY
90% SET

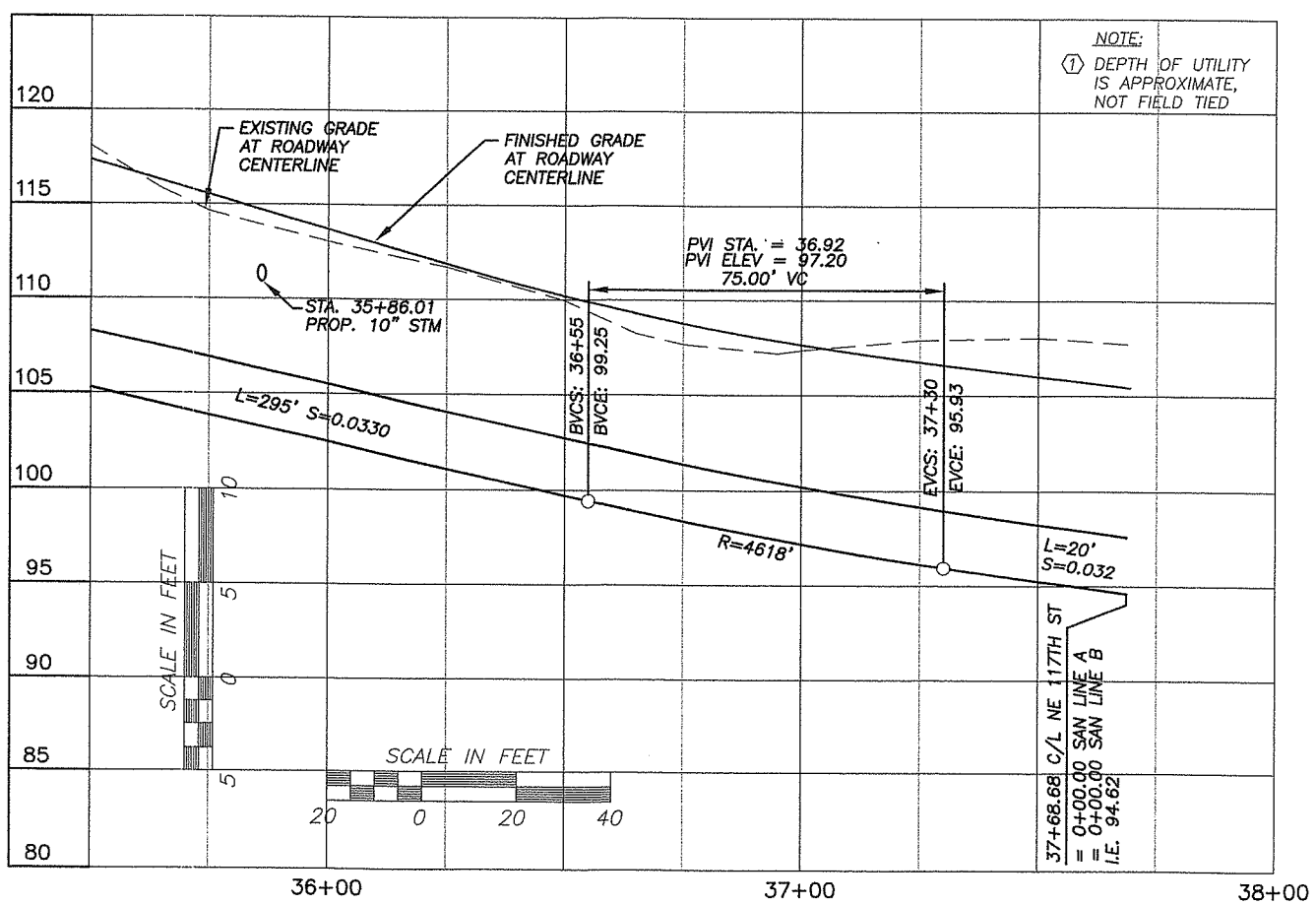

DESIGNED TK/SN
DRAWN AF
CRP 381022
HOR. AS SHOWN
VERT. AS SHOWN
DATE 10-01-04
DWG: SA07
SHEET X OF X

CALL 48 HOURS BEFORE YOU DIG
1-800-553-4344
"It's the Law"
NORTHWEST UTILITIES NOTIFICATION CENTER

EXPIRES: JUNE 27, 2006

Mackay & Sposito, Inc.
ENGINEERS SURVEYORS PLANNERS
8338 NE ALDERWOOD ROAD VANCOUVER, WASHINGTON 98665
(360) 695-3411 FAX (360) 695-6933
(503) 239-9259 PTLD

DESIGN & ENGINEERING DIVISION

NW 119TH/117TH STREET
KLINELINE FORCE MAIN SEGMENT A

proud past, promising future
CLARK COUNTY
WASHINGTON

DATE PLOTTED: Oct 01, 2004 – 2:55pm M&S DRAWING FILE: W:\13800\13866\4-DESIGN\DWGS\Task 3 Force Main 7th-119th\FINAL DESIGN – TASK 3.2\13866 plans_TC3.2.dwg

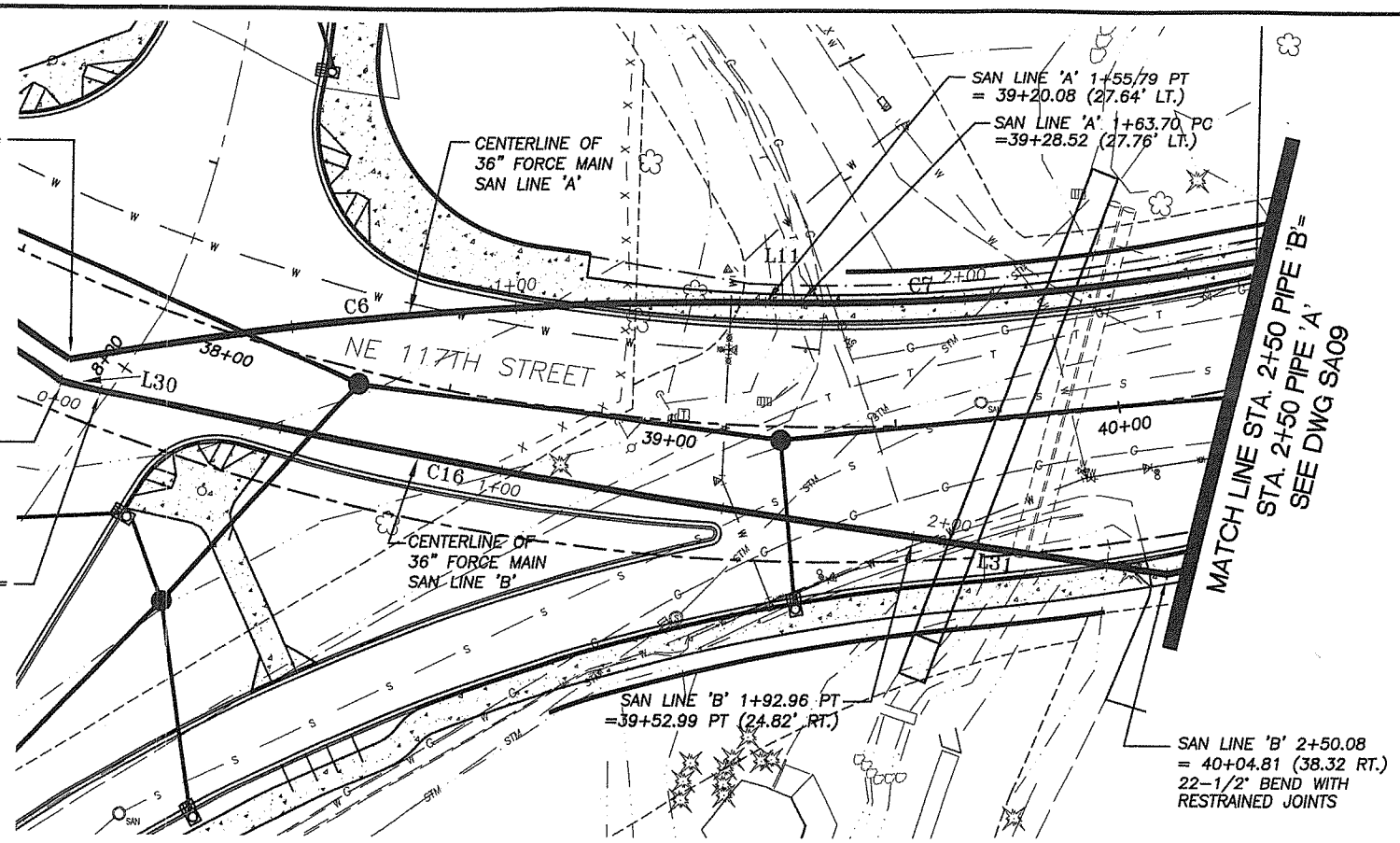

NOTES:

1. ALL TOPOGRAPHY AND UTILITY TIES ARE AS OBTAINED FROM CLARK COUNTY EXCEPT AS NOTED BELOW.
2. PROPOSED AND EXISTING WATER LINES ARE AS OBTAINED FROM CLARK PUBLIC UTILITIES

SCALE IN FEET

20 0 20 40

LINE TABLE – SAN LINE A		
LINE	LENGTH	BEARING
L11	7.91'	S89°28'19"E

LINE TABLE – SAN LINE B		
LINE	LENGTH	BEARING
L30	9.09'	S76°32'43"E
L31	57.12'	S82°02'53"E

CURVE TABLE – SAN LINE A			
CURVE	LENGTH	RADIUS	DELTA
C6	155.79'	820.00'	10°53'08"
C7	104.84'	500.00'	12°00'48"

CURVE TABLE – SAN LINE B			
CURVE	LENGTH	RADIUS	DELTA
C16	183.87'	2500.00'	4°12'50"

PRELIMINARY
90% SET

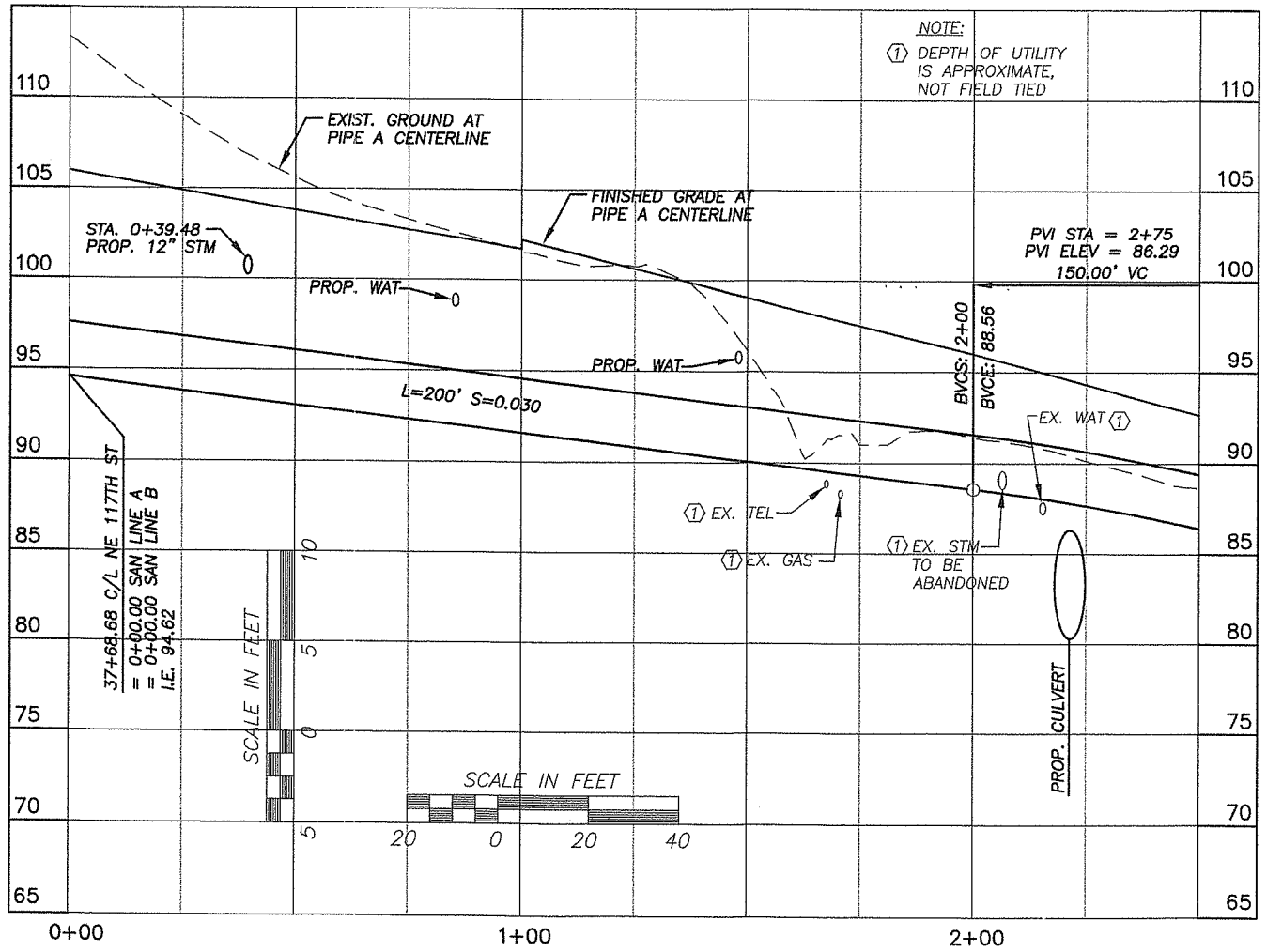

SANITARY LINE 'A'

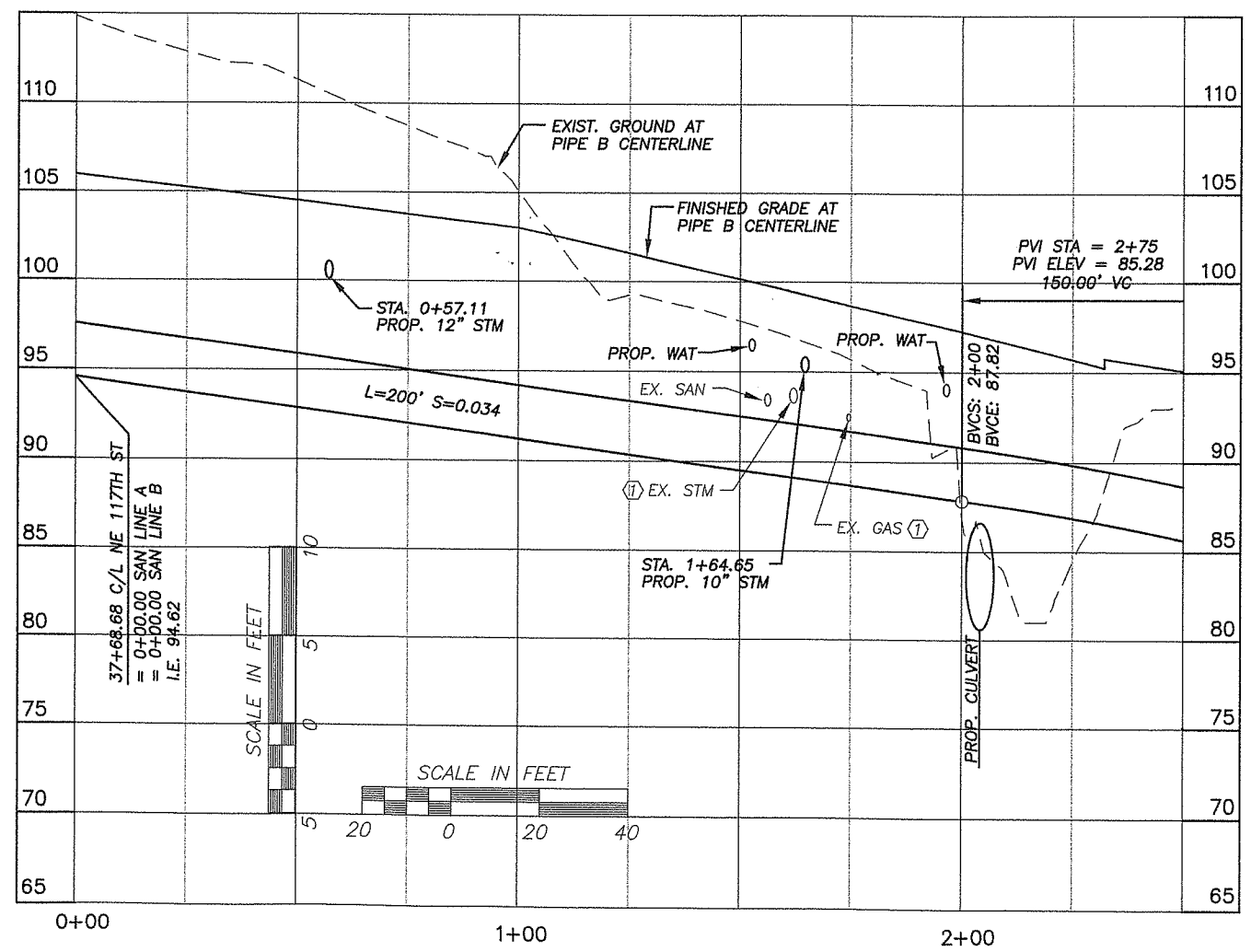

SANITARY LINE 'B'

DESIGNED TK/SN
DRAWN AF
CRP 381022
HOR. AS SHOWN
VERT. AS SHOWN
DATE 10-01-04
DWG: SA08
SHEET X OF X

CALL 48 HOURS BEFORE YOU DIG 1-800-553-4344 "It's the Law" NORTHWEST UTILITIES NOTIFICATION CENTER

STATE OF WASHINGTON 22294 REGISTERED PROFESSIONAL ENGINEER
EXPIRES: JUNE 22, 2005

MacKay & Sposito, Inc. M&S
ENGINEERS SURVEYORS PLANNERS
11405 NE 72ND AVENUE VANCOUVER, WASHINGTON 98662
(360) 695-3411 (503) 284-5757 FAX (360) 695-0823

DESIGN & ENGINEERING DIVISION

NW 119TH/117TH STREET
KLINELINE FORCE MAIN SEGMENT A

proud past, promising future
CLARK COUNTY
WASHINGTON

DATE PLOTTED: Oct 01, 2004 – 2:56pm M&S DRAWING FILE: W:\13800\13866\4-DESIGN\DWGS\Task 3 Force Main 7th-119th\FINAL DESIGN – TASK 3.2\13866 plans_TC3.2.dwg

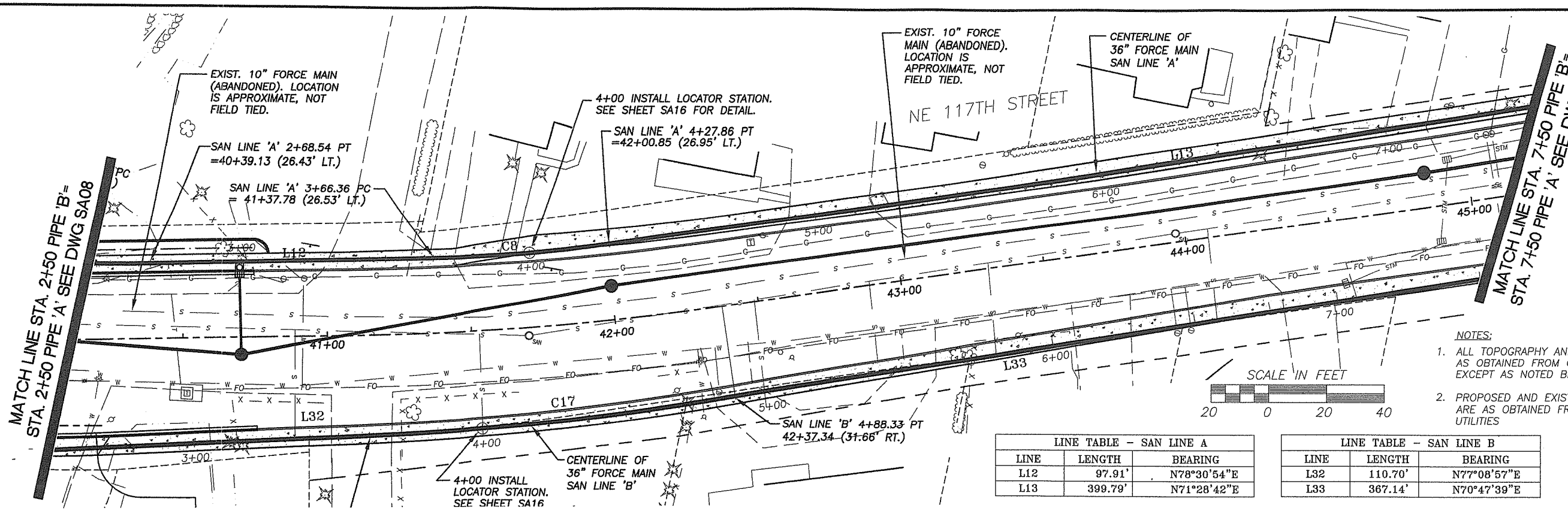

NOTES:

1. ALL TOPOGRAPHY AND UTILITY TIES ARE AS OBTAINED FROM CLARK COUNTY EXCEPT AS NOTED BELOW.
2. PROPOSED AND EXISTING WATER LINES ARE AS OBTAINED FROM CLARK PUBLIC UTILITIES

LINE TABLE – SAN LINE A		
LINE	LENGTH	BEARING
L12	97.91'	N78°30'54"E
L13	399.79'	N71°28'42"E

LINE TABLE – SAN LINE B		
LINE	LENGTH	BEARING
L32	110.70'	N77°08'57"E
L33	367.14'	N70°47'39"E

CURVE TABLE – SAN LINE A			
CURVE	LENGTH	RADIUS	DELTA
C7	104.84'	500.00'	12°00'46"
C8	61.41'	500.00'	8°57'03"

CURVE TABLE – SAN LINE B			
CURVE	LENGTH	RADIUS	DELTA
C17	127.55'	1033.50'	7°02'12"

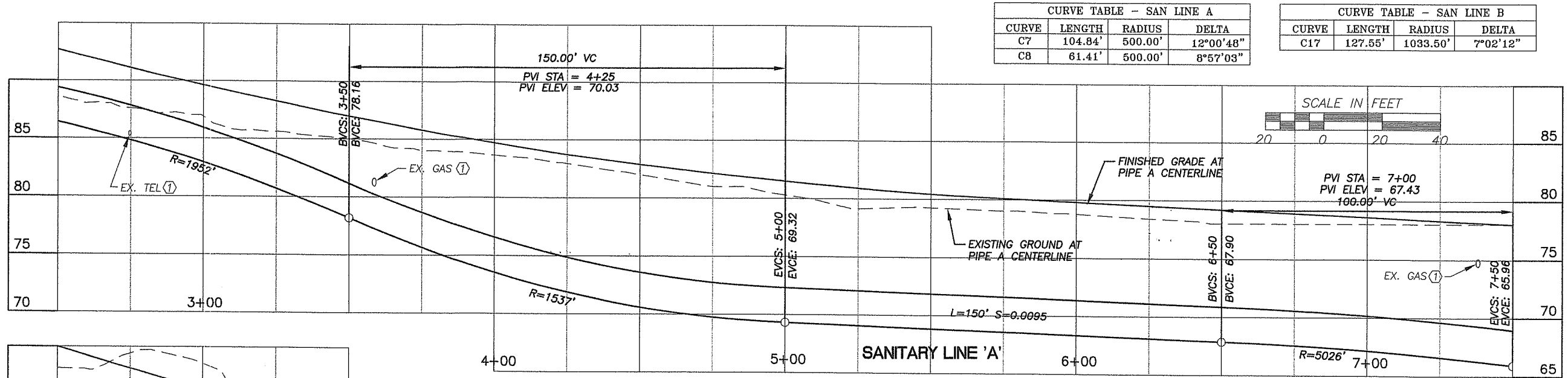

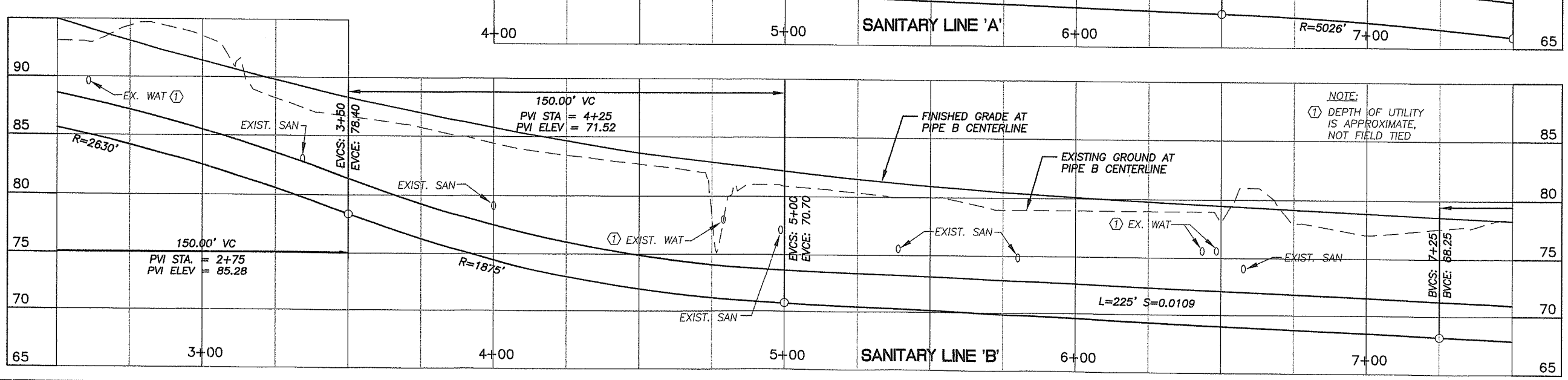

NOTE:
(1) DEPTH OF UTILITY IS APPROXIMATE, NOT FIELD TIED

PRELIMINARY
90% SET

DESIGNED TK/SN
DRAWN AF
CRP 381022
HOR. AS SHOWN
VERT. AS SHOWN
DATE 10-01-04
DWG: SA09
SHEET X OF X

CALL 48 HOURS BEFORE YOU DIG 1-800-553-4344 "It's the Law" NORTHWEST UTILITIES NOTIFICATION CENTER

STATE OF WASHINGTON JEFFREY A. MCDONALD 23964 REGISTERED PROFESSIONAL ENGINEER
EXPIRES: JUNE 22, 2006

MacKay & Sposito, Inc.
ENGINEERS SURVEYORS PLANNERS
703 SE 16TH CENTER PARKWAY, SUITE 140 VANCOUVER, WA 98683
(360) 253-9411 (360) 696-9411 FAX

DESIGN & ENGINEERING DIVISION

NW 119TH/117TH STREET
KLINELINE FORCE MAIN SEGMENT A

proud past, promising future
CLARK COUNTY WASHINGTON

DATE PLOTTED: Oct 01, 2004 – 2:56pm M&S DRAWING FILE: W:\138001\13866\4-DESIGN\DWGS\Task 3 Force Main 7th-119th\FINAL DESIGN – TASK 3.2\13866 plans_TC12.dwg

NOTES:

1. ALL TOPOGRAPHY AND UTILITY TIES ARE AS OBTAINED FROM CLARK COUNTY EXCEPT AS NOTED BELOW.
2. PROPOSED AND EXISTING WATER LINES ARE AS OBTAINED FROM CLARK PUBLIC UTILITIES

SCALE IN FEET

20 0 20 40

LINE TABLE – SAN LINE A		
LINE	LENGTH	BEARING
L13	399.79'	N71°28'42"E
L14	13.34'	N26°28'42"E
L15	35.45'	N03°58'42"E
L16	13.97'	N08°53'24"W

LINE TABLE – SAN LINE B		
LINE	LENGTH	BEARING
L33	367.14'	N70°47'39"E
L34	28.83'	N26°32'44"E
L35	6.24'	S18°27'16"E

CURVE TABLE – SAN LINE A			
CURVE	LENGTH	RADIUS	DELTA
C9	88.09'	507.00'	9°57'17"

CURVE TABLE – SAN LINE B			
CURVE	LENGTH	RADIUS	DELTA
C18	171.02'	502.00'	19°31'09"

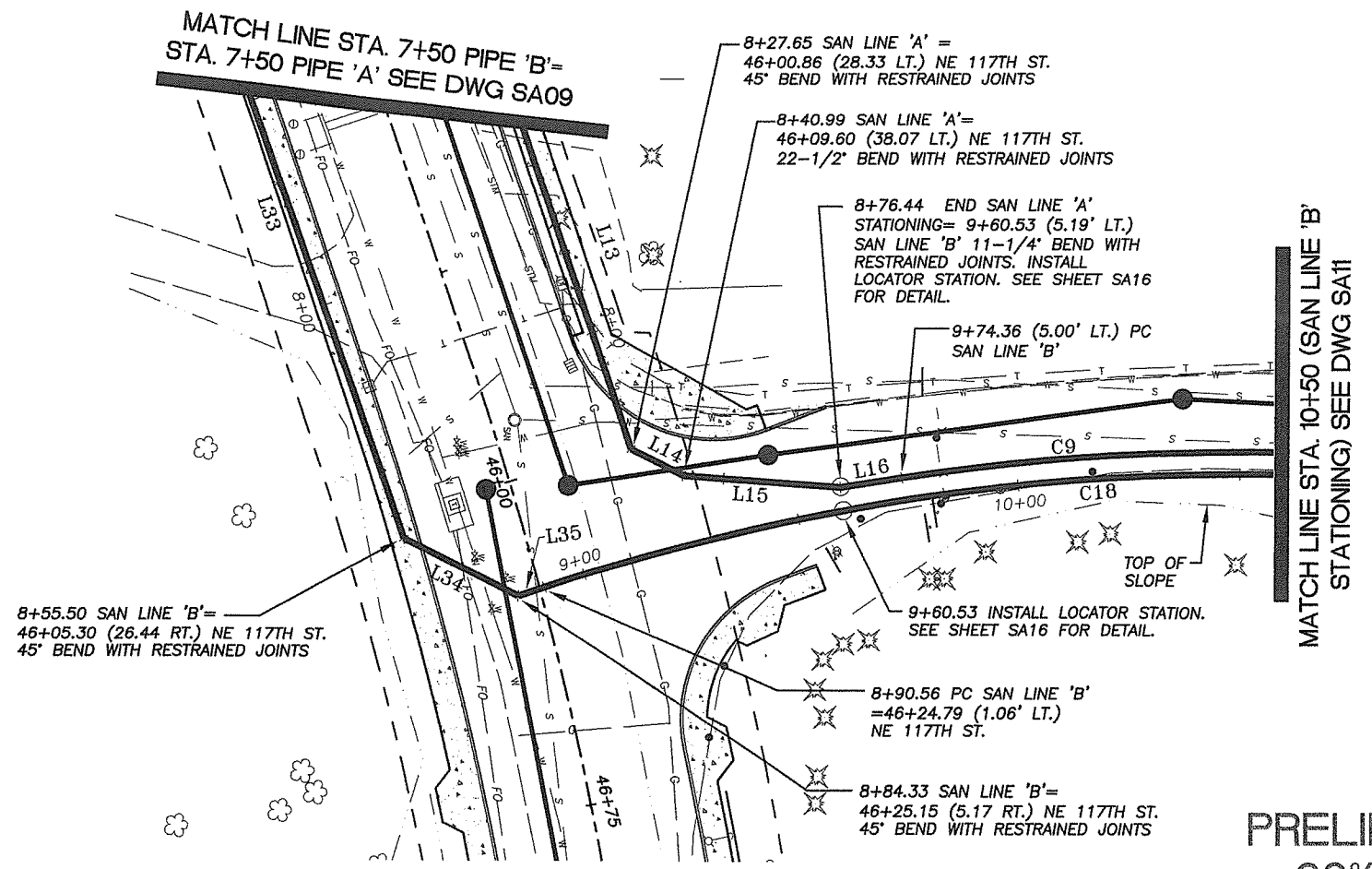

PRELIMINARY
90% SET

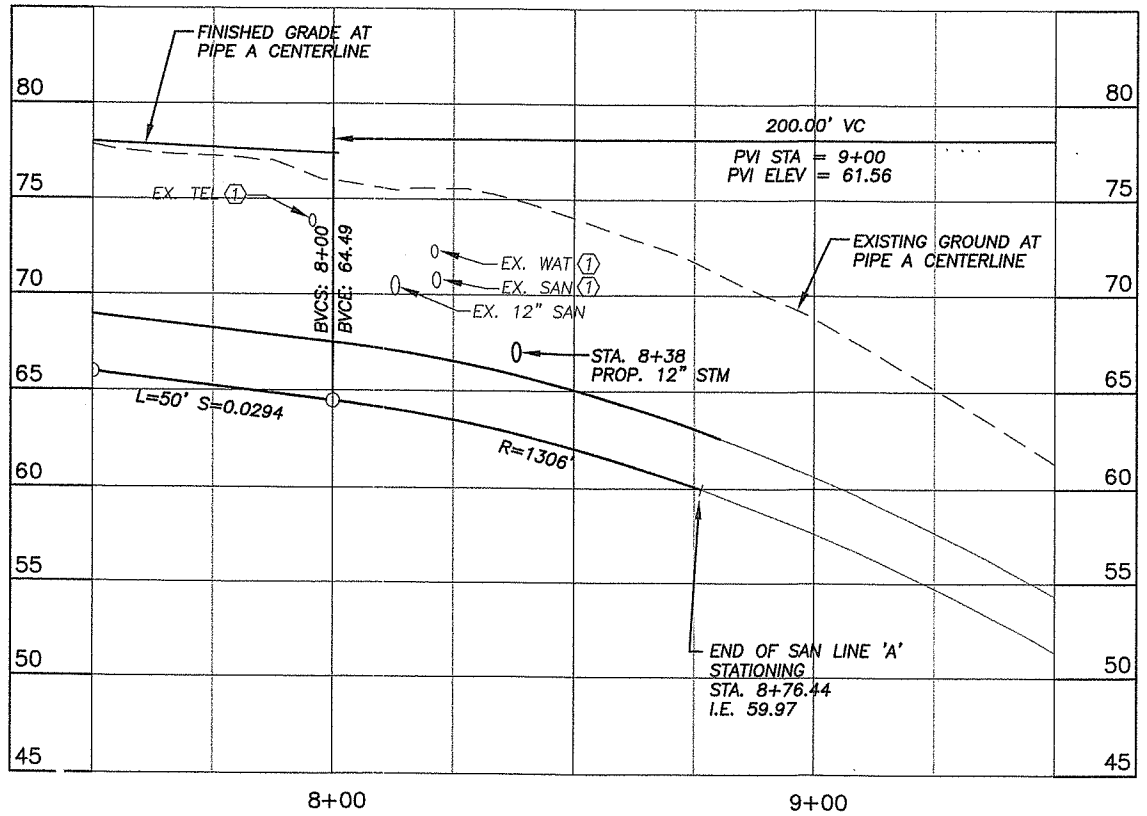

SANITARY LINE 'A'

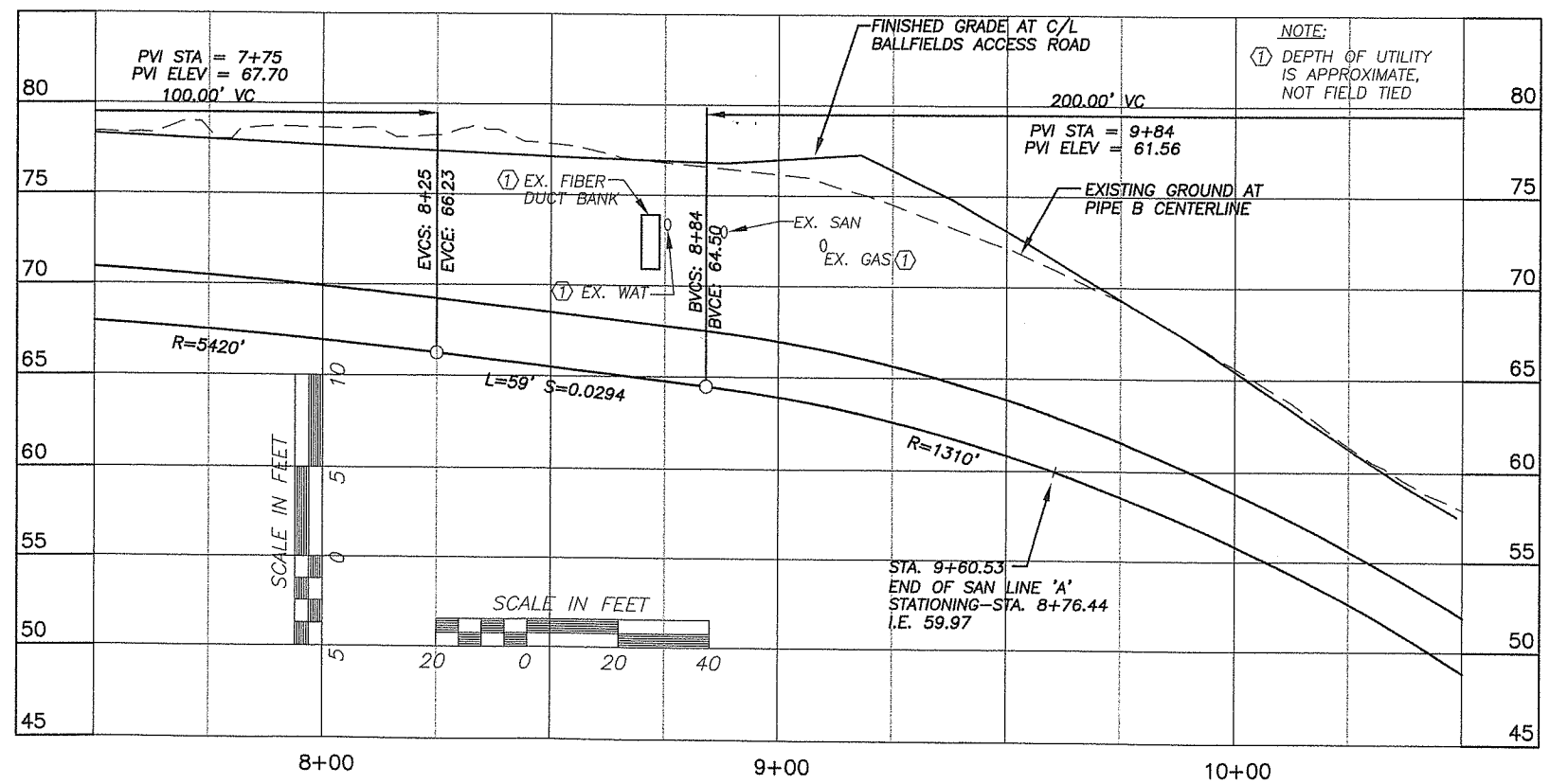

SANITARY LINE 'B'

DESIGNED	TK/SN
DRAWN	AF
CRP	381022
HOR.	AS SHOWN
VERT.	AS SHOWN
DATE	10-01-04
DWG:	SA10
SHEET X	OF X

CALL 48 HOURS BEFORE YOU DIG 1-800-553-4344 "It's the Law" NORTHWEST UTILITIES NOTIFICATION CENTER

MICHAEL D. MACKAY STATE OF WASHINGTON 22094 REGISTERED PROFESSIONAL ENGINEER

EXPIRES: JUNE 29, 2005

Mackay & Sposito, Inc. M&S
ENGINEERS SURVEYORS PLANNERS
735 SE 10TH CENTER WAY, SUITE 110 VANCOUVER, WA 98683
(360) 696-9411 FAX (360) 696-9414 CRP: 381022

DESIGN & ENGINEERING DIVISION

NW 119TH/117TH STREET
KLINELINE FORCE MAIN SEGMENT A

proud past, promising future
CLARK COUNTY WASHINGTON

DATE PLOTTED: Oct 01, 2004 – 2:57pm MAS DRAWING FILE: W:\13800\13866\4-DESIGN\DWGS\Task 3 Force Main 7th-119th\FINAL DESIGN – TASK 3.2\13866 plans_TC3.2.dwg

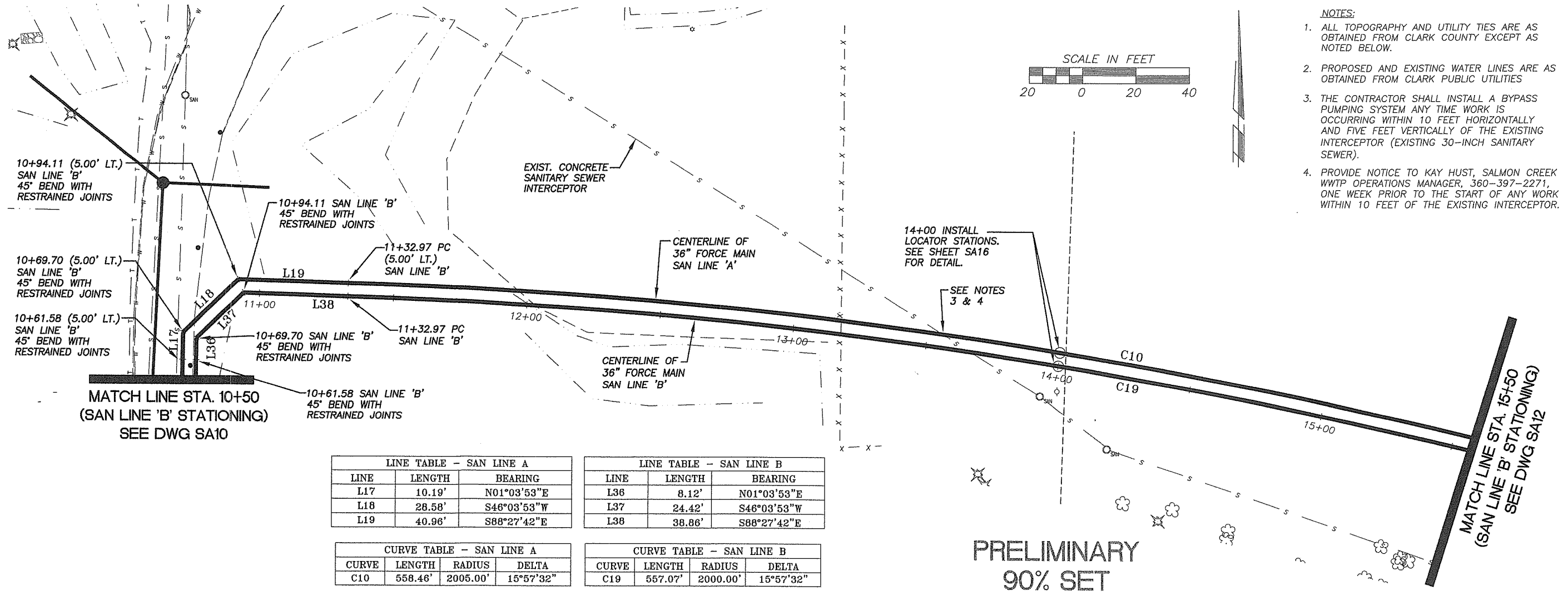

NOTES:

1. ALL TOPOGRAPHY AND UTILITY TIES ARE AS OBTAINED FROM CLARK COUNTY EXCEPT AS NOTED BELOW.
2. PROPOSED AND EXISTING WATER LINES ARE AS OBTAINED FROM CLARK PUBLIC UTILITIES
3. THE CONTRACTOR SHALL INSTALL A BYPASS PUMPING SYSTEM ANY TIME WORK IS OCCURRING WITHIN 10 FEET HORIZONTALLY AND FIVE FEET VERTICALLY OF THE EXISTING INTERCEPTOR (EXISTING 30-INCH SANITARY SEWER).
4. PROVIDE NOTICE TO KAY HUST, SALMON CREEK WWTP OPERATIONS MANAGER, 360-397-2271, ONE WEEK PRIOR TO THE START OF ANY WORK WITHIN 10 FEET OF THE EXISTING INTERCEPTOR.

LINE TABLE - SAN LINE A		
LINE	LENGTH	BEARING
L17	10.19'	N01°03'53"E
L18	28.58'	S46°03'53"W
L19	40.96'	S88°27'42"E

LINE TABLE - SAN LINE B		
LINE	LENGTH	BEARING
L36	8.12'	N01°03'53"E
L37	24.42'	S46°03'53"W
L38	38.86'	S88°27'42"E

CURVE TABLE - SAN LINE A			
CURVE	LENGTH	RADIUS	DELTA
C10	558.46'	2005.00'	15°57'32"

CURVE TABLE - SAN LINE B			
CURVE	LENGTH	RADIUS	DELTA
C19	557.07'	2000.00'	15°57'32"

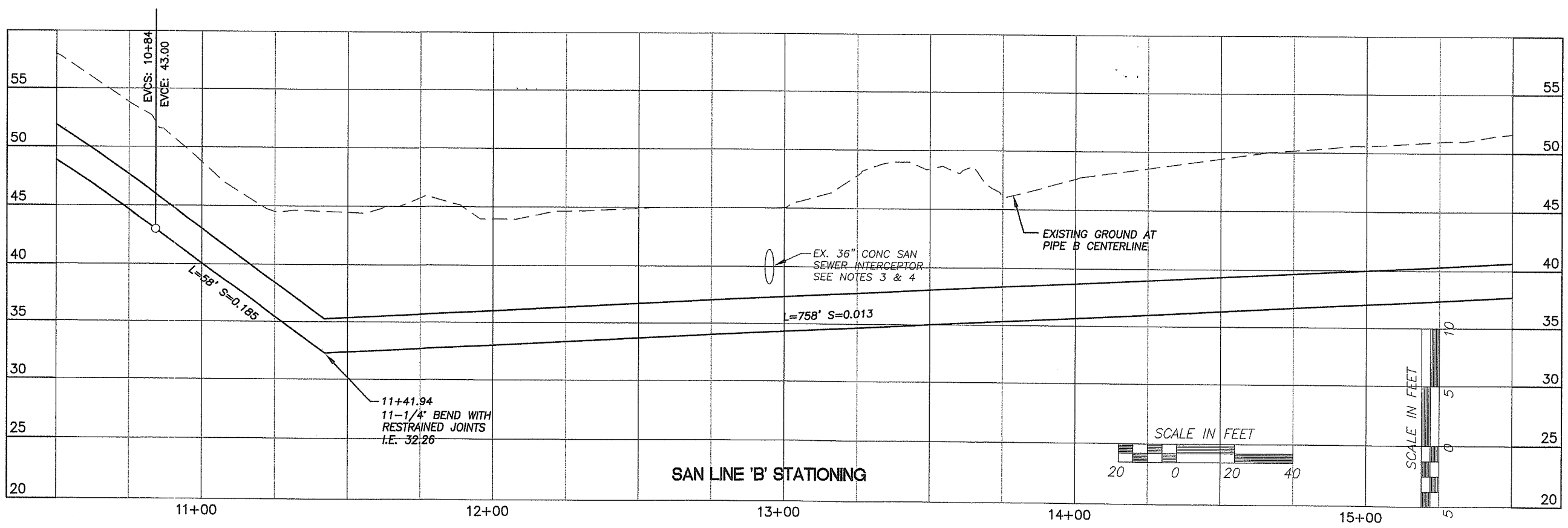

DESIGNED TK/SN
DRAWN AF
CRP 381022
HOR. AS SHOWN
VERT. AS SHOWN
DATE 10-01-04
DWG: SA11
SHEET X OF X

CALL 48 HOURS BEFORE YOU DIG
1-800-553-4344
"It's the Law"
NORTHWEST UTILITIES NOTIFICATION CENTER

DONALD J. MOTT
STATE OF WASHINGTON
22554
REGISTERED PROFESSIONAL ENGINEER
EXPIRES: JUNE 29, 2005

MacKay & Sposito, Inc.
ENGINEERS SURVEYORS PLANNERS
10300 SE Evergreen Highway, Vancouver, WA 98664
(360) 695-1411 (503) 233-5073 FAX (360) 696-0933

DESIGN & ENGINEERING

NW 119TH/117TH STREET
KLINELINE FORCE MAIN SEGMENT A

proud past, promising future
CLARK COUNTY
WASHINGTON

DATE PLOTTED: Oct 01, 2004 - 2:57pm M&S DRAWING FILE: W:\13800\13866\4-DESIGN\DWGS\Task 3 Force Main 7th-119th\FINAL DESIGN - TASK 3.2\13866 plans_TC3.2.dwg

NOTES:

1. ALL TOPOGRAPHY AND UTILITY TIES ARE AS OBTAINED FROM CLARK COUNTY EXCEPT AS NOTED BELOW.
2. PROPOSED AND EXISTING WATER LINES ARE AS OBTAINED FROM CLARK PUBLIC UTILITIES

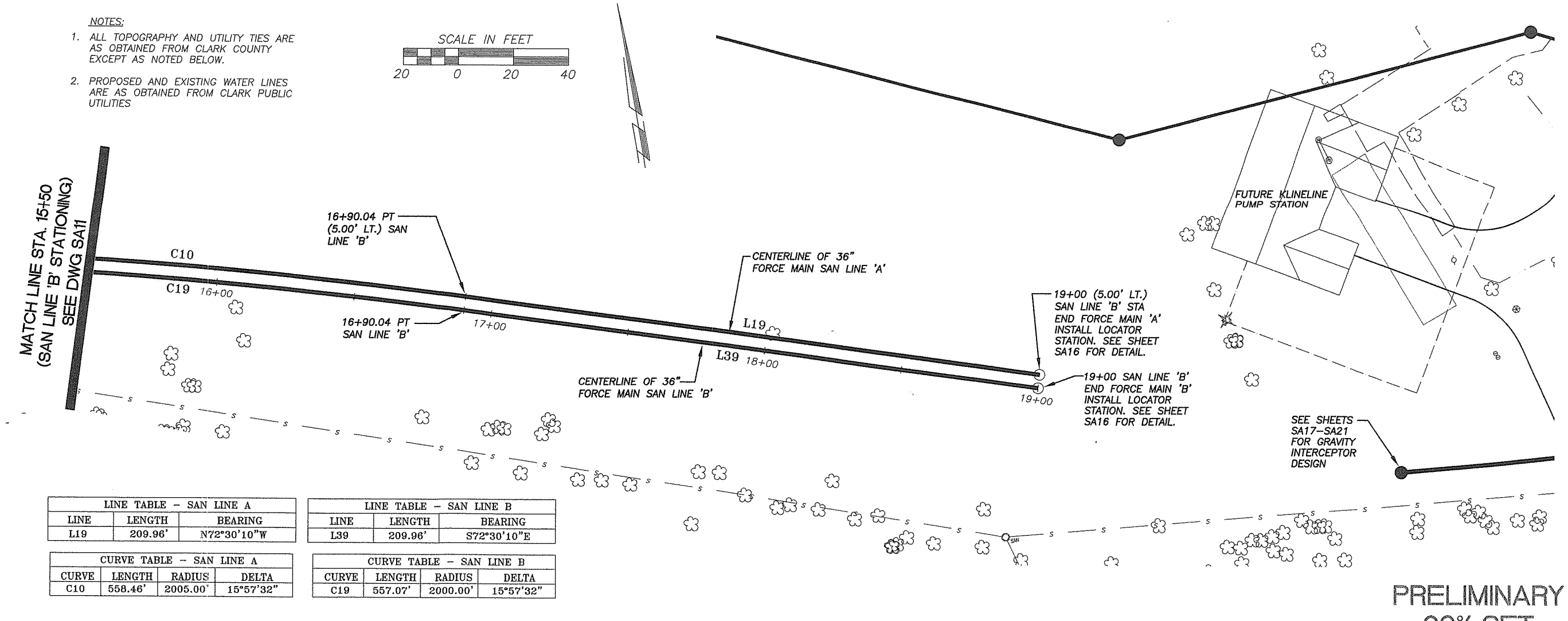

LINE TABLE – SAN LINE A		
LINE	LENGTH	BEARING
L19	209.96'	N72°30'10"W

LINE TABLE – SAN LINE B		
LINE	LENGTH	BEARING
L39	209.96'	S72°30'10"E

CURVE TABLE – SAN LINE A			
CURVE	LENGTH	RADIUS	DELTA
C10	558.46'	2005.00'	15°57'32"

CURVE TABLE – SAN LINE B			
CURVE	LENGTH	RADIUS	DELTA
C19	557.07'	2000.00'	15°57'32"

PRELIMINARY
90% SET

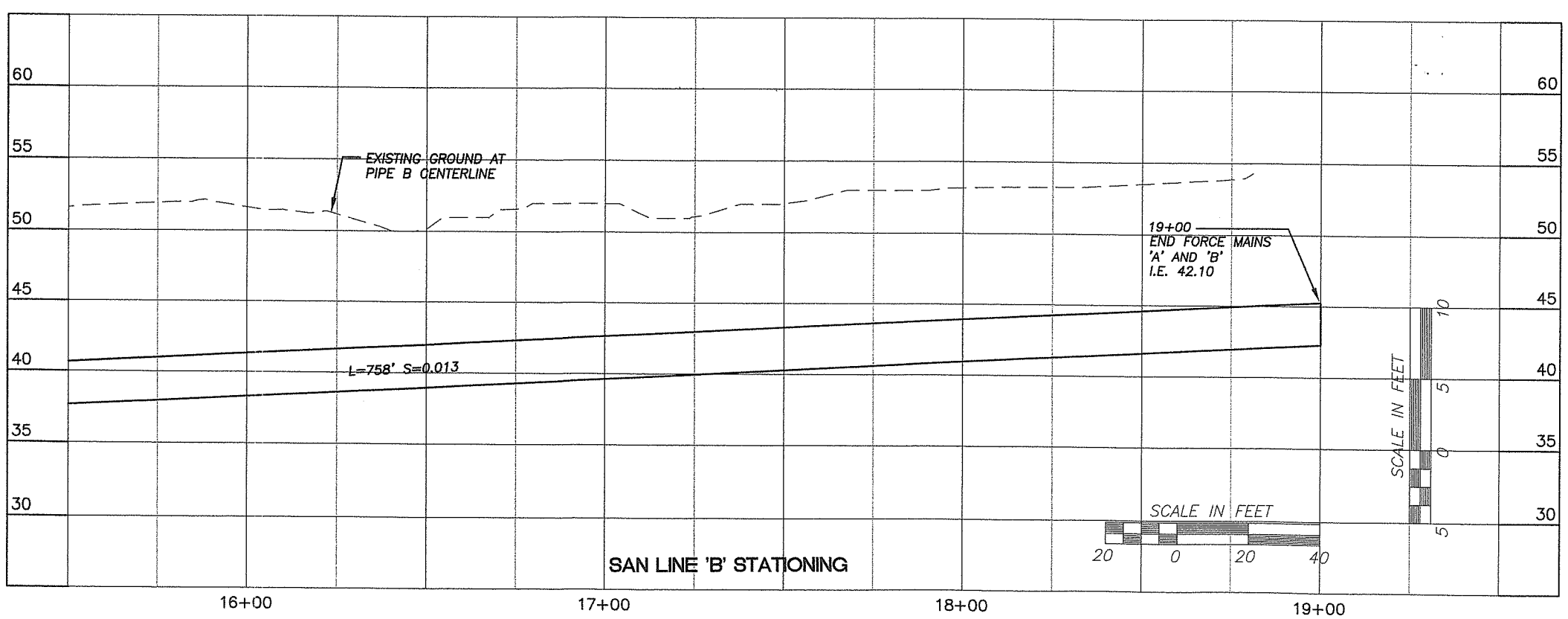

DESIGNED TK/SN
DRAWN AF
CRP 381022
HOR. AS SHOWN
VERT. AS SHOWN
DATE 10-01-04
DWG. SA12
SHEET X OF X

CALL 48 HOURS BEFORE YOU DIG
1-800-553-4344
"It's the Law"
NORTHWEST UTILITIES NOTIFICATION CENTER

STEVEN A. MOE
STATE OF WASHINGTON
23594
REGISTERED PROFESSIONAL ENGINEER
EXPIRES: JUNE 22, 2005

MacKay & Sposito, Inc.
ENGINEERS SURVEYORS PLANNERS
1335 SE TECH CENTER DRIVE, SUITE 140 VANCOUVER, WA 98683
(360) 892-0411 (503) 226-6151 FAX (360) 604-0503

DESIGN & ENGINEERING DIVISION

NW 119TH/117TH STREET
KLINELINE FORCE MAIN SEGMENT A

proud past, promising future
CLARK COUNTY
WASHINGTON

DATE PLOTTED: Oct 01, 2004 – 2:57pm M&S DRAWING FILE: W:\13800\13866\4-DESIGN\DWGS\Task 3 Force Main 7th-119th\FINAL DESIGN – TASK 3.2\13866 plans_TC3.2.dwg

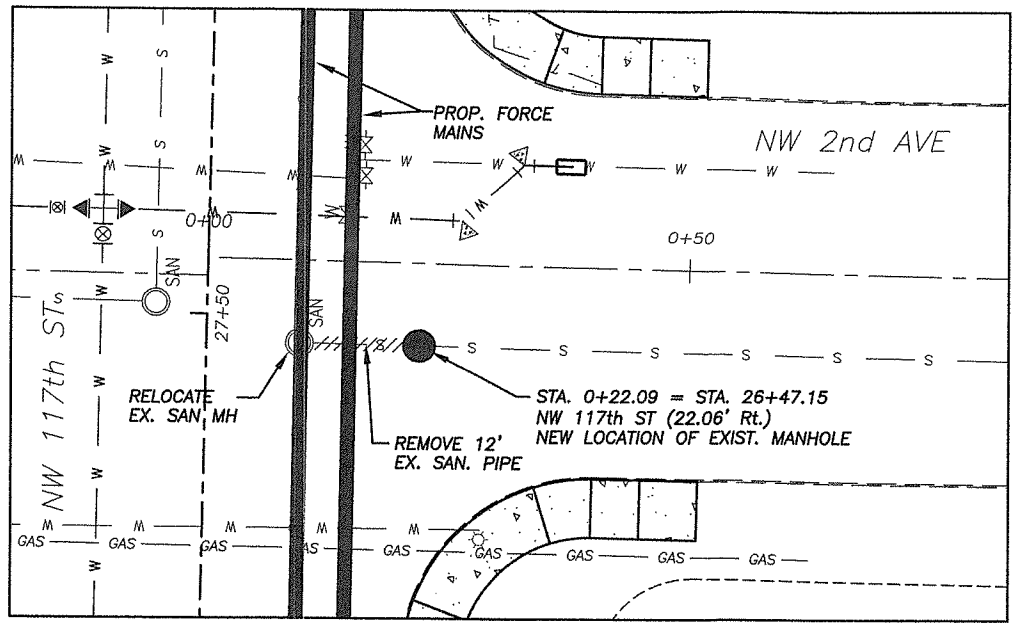

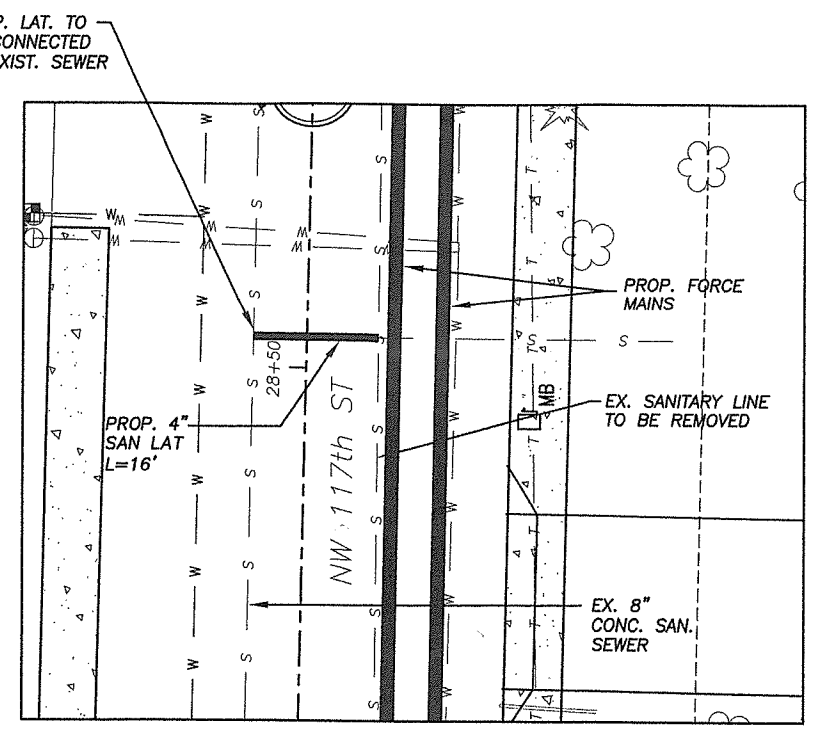

SCALE IN FEET

10 0 10 20

PRELIMINARY
90% SET

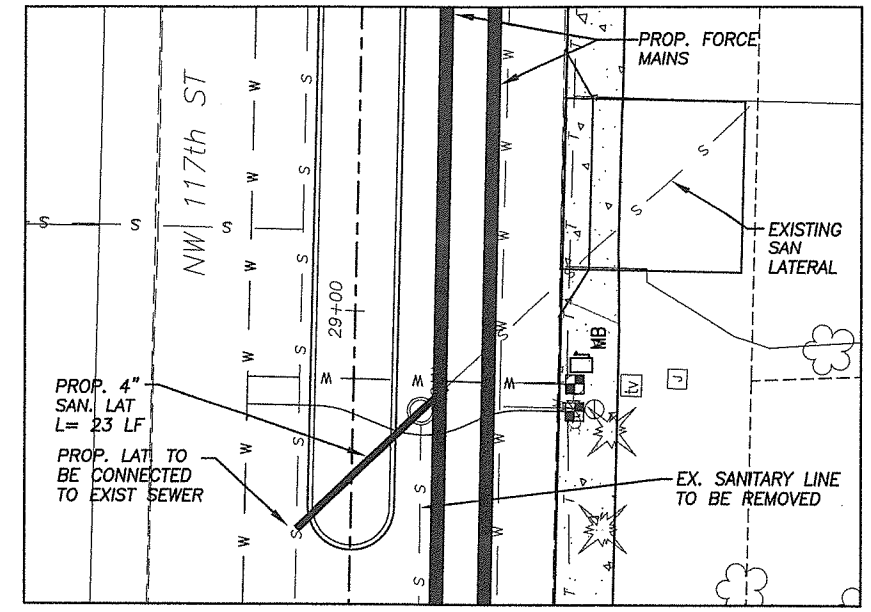

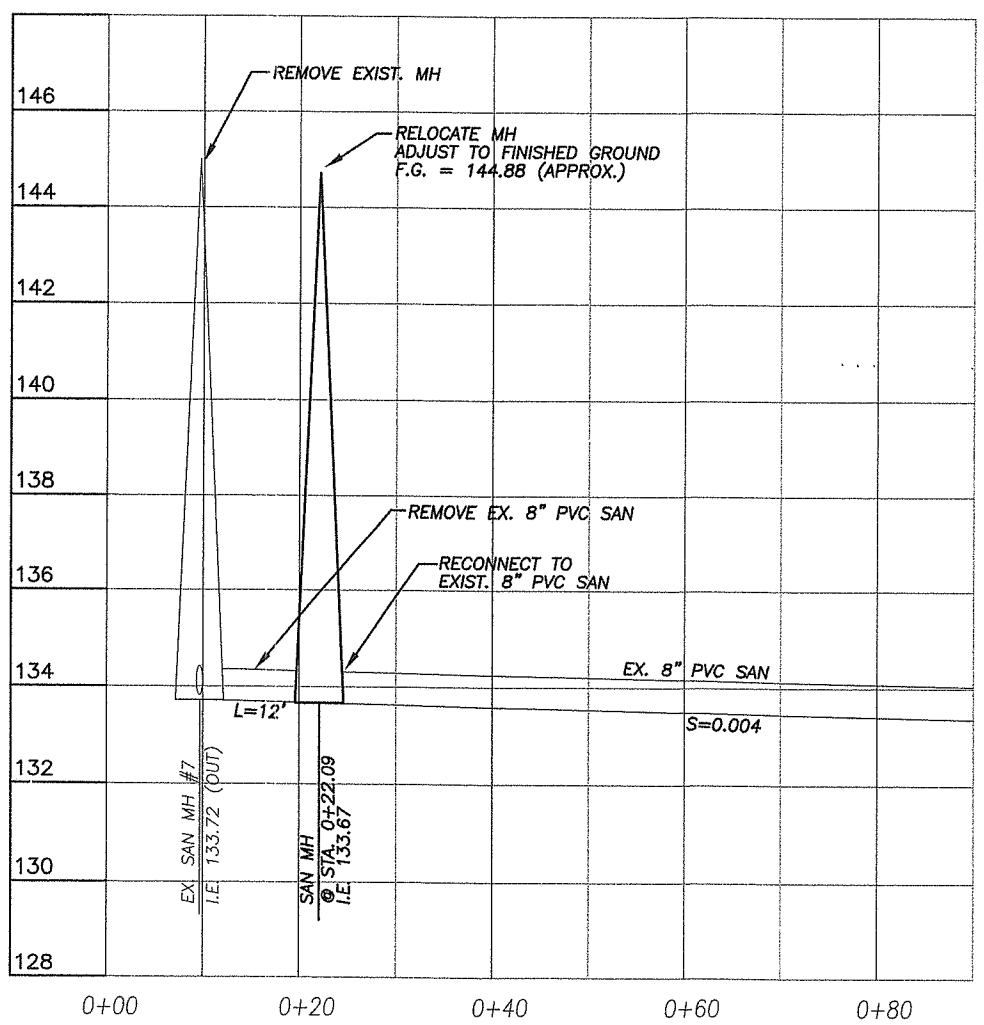

SANITARY MANHOLE PLACEMENT - NW 2ND AVE

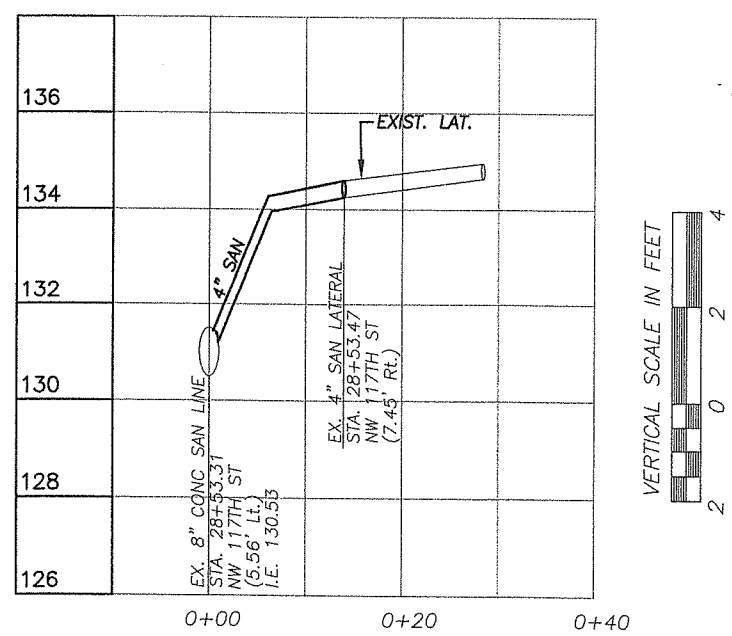

CONNECT TO EXIST. SAN SEWER PER HDSD DETAIL #10
SHT SA21. TAP WILL BE MADE BY HDSD. A "REQUEST FOR TAP" FORM MUST BE COMPLETED TWO (2) DAYS BEFORE THE TAP IS NEEDED.

LOCATION AND SLOPE OF EXIST. SAN LATERAL IS APPROXIMATE. CONTACT ENGINEER IF LOCATIONS ARE MATERIALLY DIFFERENT FROM WHAT IS SHOWN.

SANITARY LATERAL EXTENSION

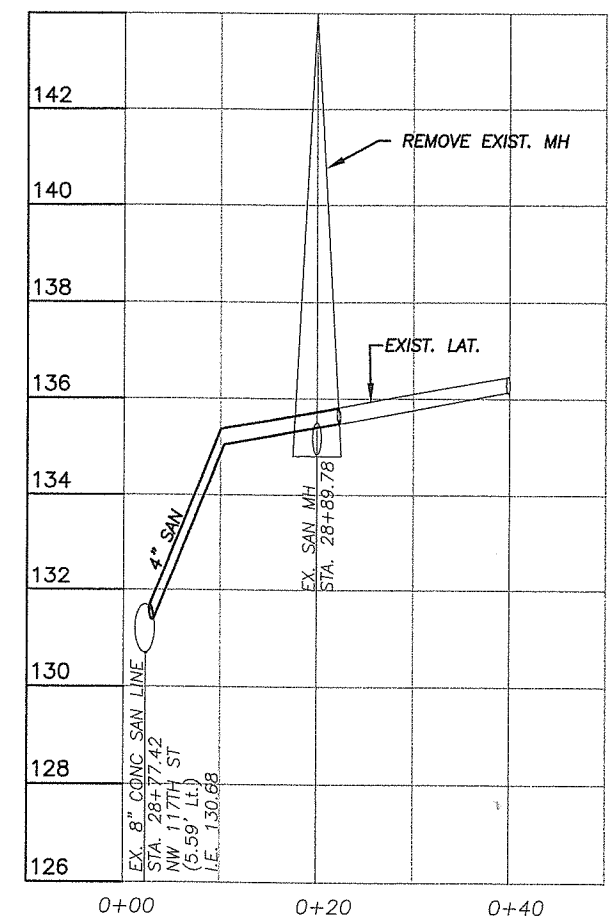

CONNECT TO EXIST. SAN SEWER PER HDSD DETAIL #10
SHT SA21. TAP WILL BE MADE BY HDSD. A "REQUEST FOR TAP" FORM MUST BE COMPLETED TWO (2) DAYS BEFORE THE TAP IS NEEDED.

LOCATION AND SLOPE OF EXIST. SAN LATERAL IS APPROXIMATE. CONTACT ENGINEER IF LOCATIONS ARE MATERIALLY DIFFERENT FROM WHAT IS SHOWN.

SANITARY LATERAL EXTENSION

DESIGNED	TK
DRAWN	AF/SN
CRP	331022
HOR.	AS SHOWN
VERT.	AS SHOWN
DATE	10-01-04
DWG:	SA13
SHEET	OF

CALL 48 HOURS BEFORE YOU DIG 1-800-553-4344 "It's the Law" NORTHWEST UTILITIES NOTIFICATION CENTER

STATE OF WASHINGTON REGISTERED PROFESSIONAL ENGINEER 22294 DONALD A. MACKAY

EXPIRES: JUNE 29, 2005

MacKay & Sposito, Inc.
ENGINEERS SURVEYORS PLANNERS
10300 SE 190TH AVENUE, SUITE 100 BATTLE GROUND, WA 98604
(360) 695-3411 (503) 226-6235 FTLD FAX (360) 695-5493

DESIGN & ENGINEERING DIVISION

NW 119TH/117TH STREET
PROPOSED SANITARY FORCE MAIN

proud past, promising future

CLARK COUNTY WASHINGTON

DATE PLOTTED: Oct 01, 2004 - 3:00pm M&S DRAWING FILE: W:\3800\13866\4-DESIGN\DWGS\Task 3 Force Main 7th-119th\FINAL DESIGN - TASK 3.2\13866 laterals.dwg

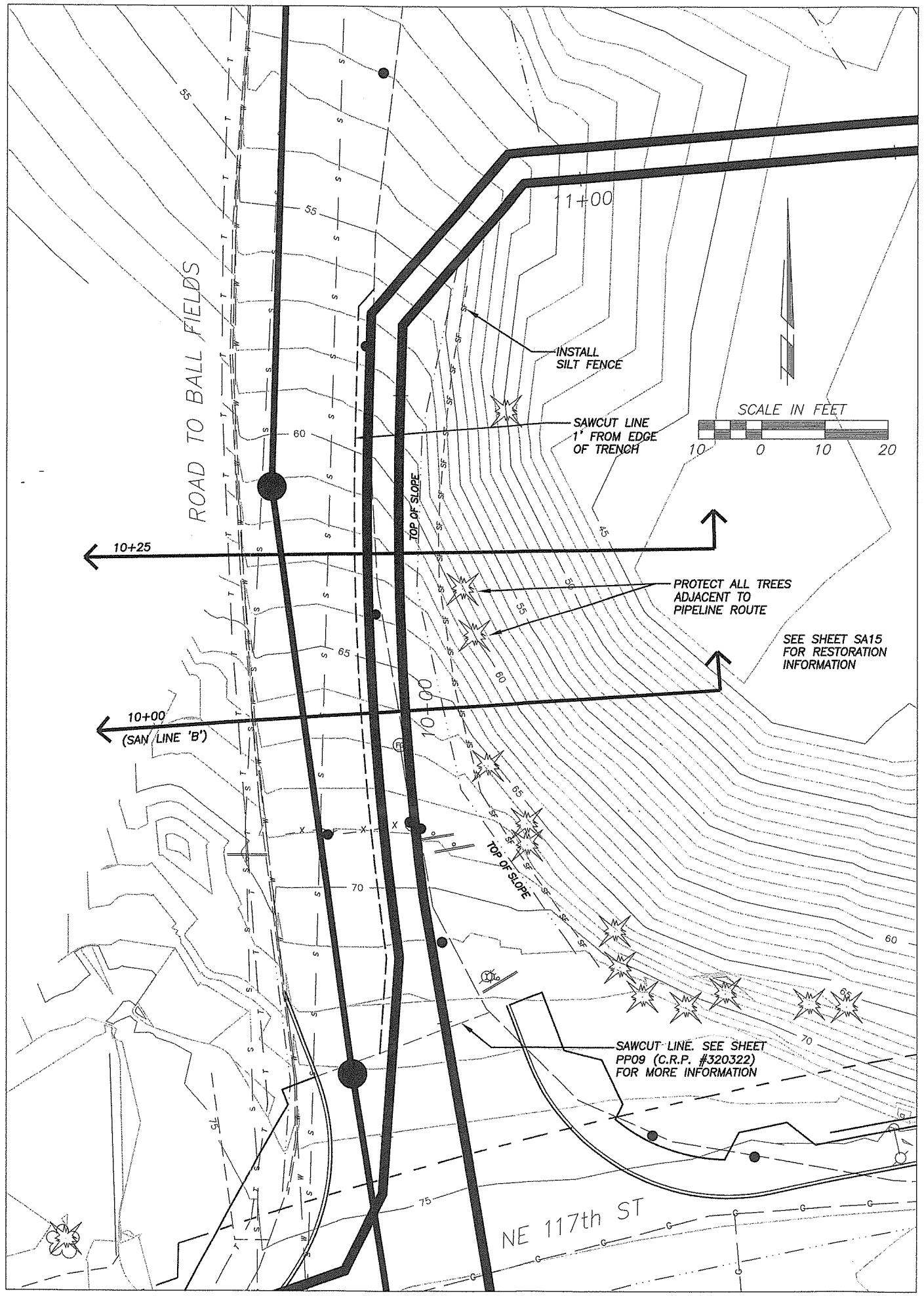

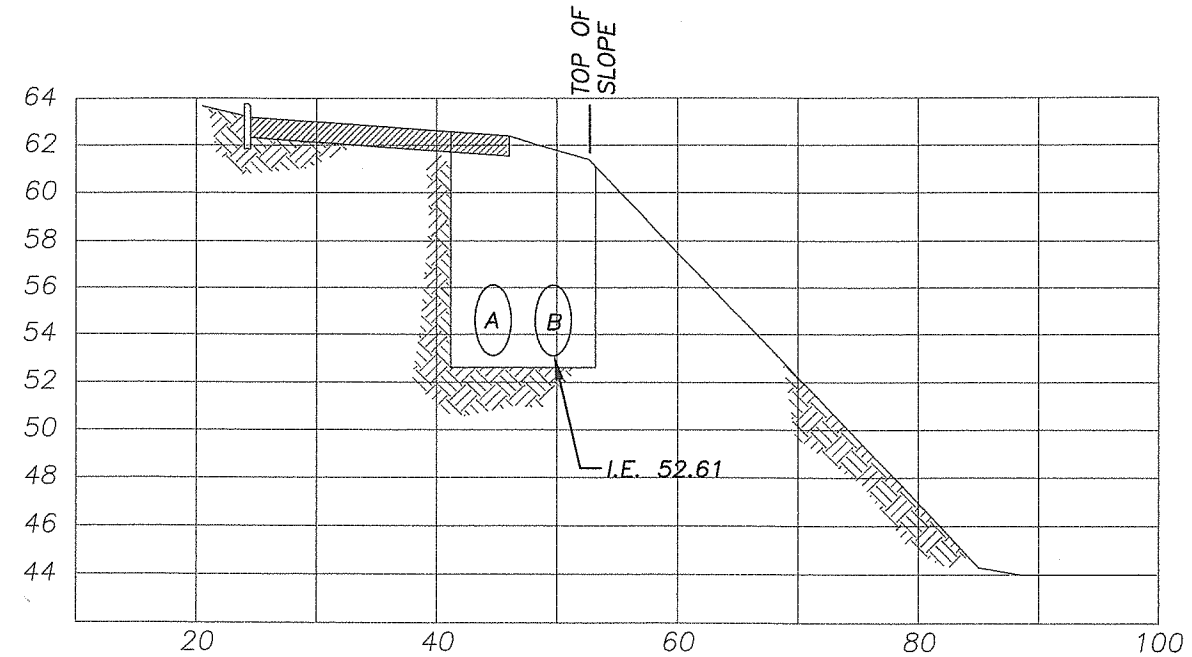

CROSS-SECTION AT STA. 10+25

PRELIMINARY
90% SET

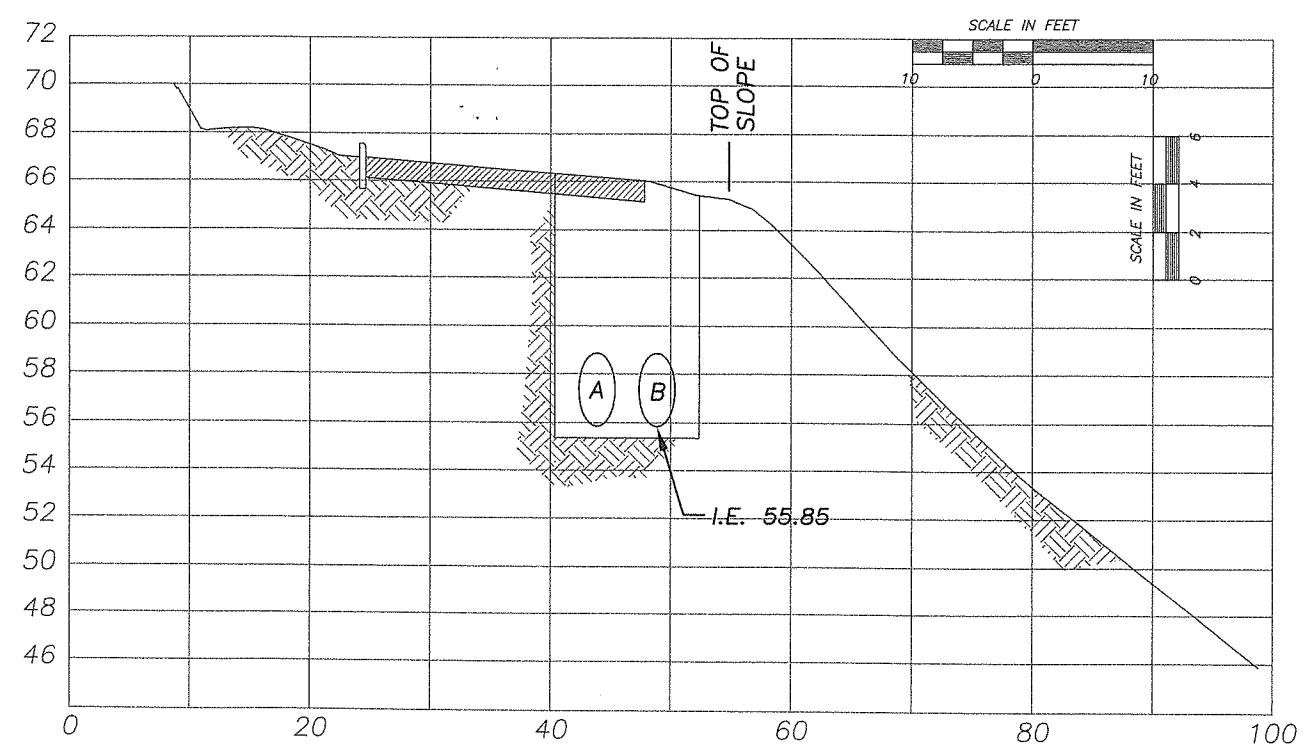

CROSS-SECTION AT STA. 10+00

DESIGNED	TK/SN
DRAWN	AF
CRP	381022
HOR.	AS SHOWN
VERT.	AS SHOWN
DATE	10-01-04
DWG.	SA14
SHEET X	OF X

CALL 48 HOURS BEFORE YOU DIG 1-800-553-4344 "It's the Law" NORTHWEST UTILITIES NOTIFICATION CENTER

STATE OF WASHINGTON MICHAEL S. SPOSITO 23894 PROFESSIONAL ENGINEER
EXPIRES: JUNE 29, 2005

Mackay & Sposito, Inc. M&S
ENGINEERS SURVEYORS PLANNERS
1328 SE TECH CENTER DRIVE, SUITE 140 VANCOUVER, WA 98683
(360) 696-9411 (503) 289-0270 FAX (360) 696-9423

DESIGN & ENGINEERING DIVISION

NW 119TH/117TH STREET
KLINELINE FORCE MAIN SEGMENT A

proud past, promising future
CLARK COUNTY WASHINGTON

DATE PLOTTED: Oct 01, 2004 – 3:01pm M&S DRAWING FILE: W:\13800\13866\4-DESIGN\DWGS\Task 3 Force Main 119th-118th\FINAL DESIGN – TASK 3.2\13866 x-sections.dwg

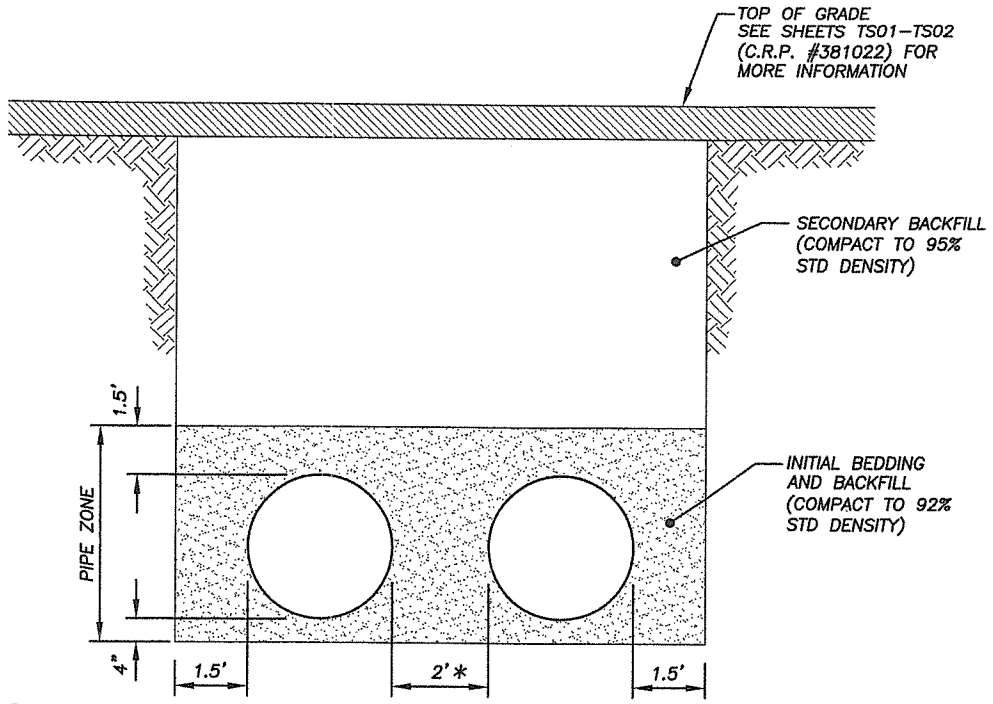

DUAL 36" FORCE MAINS

WITHIN PAVEMENT

NW 117TH ST. STATIONING
STA. 4+75 STA. TO STA. 37+68.76

* FROM STA. 4+75 TO STA. 9+61.30, DISTANCE BETWEEN PIPES TRANSITIONS FROM 1.0' TO 2.0'

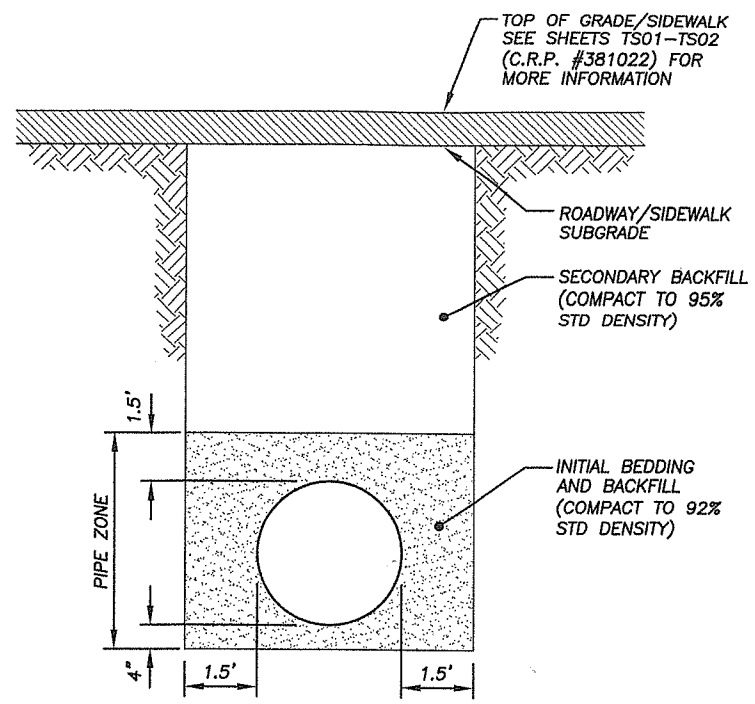

SINGLE 36" FORCE MAIN

SAN LINE 'A' STATIONING
STA. 0+00 TO STA. 8+76.44

SAN LINE 'B' STATIONING
STA. 0+00 TO STA. 9+60.53

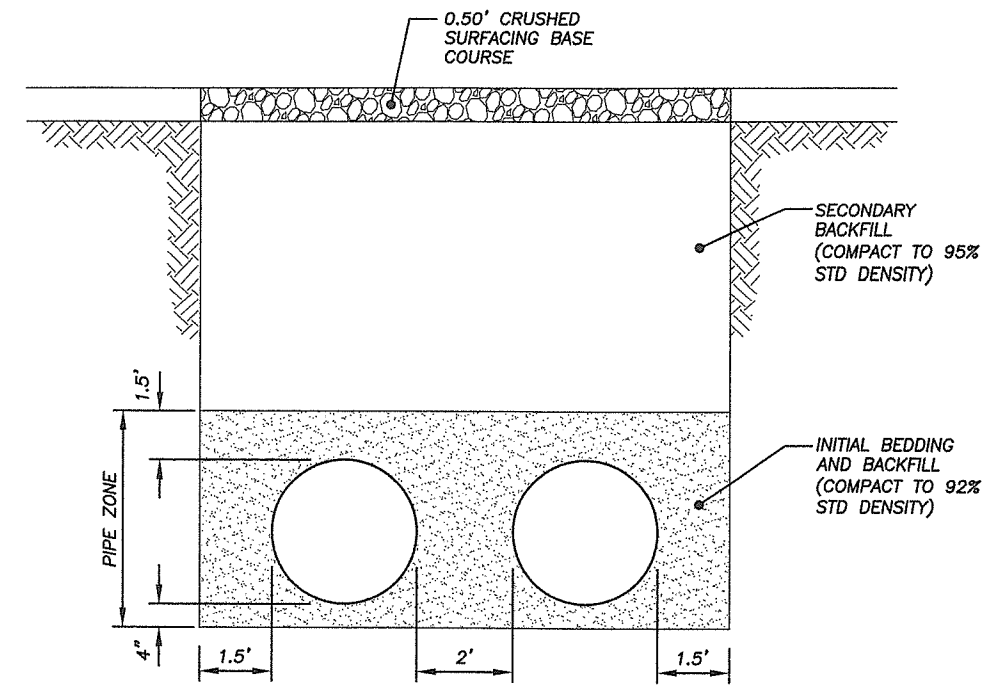

DUAL 36" FORCE MAINS

UNDER GRAVEL

SAN LINE 'B' STATIONING
STA. 12+03.09 TO STA. 15+44.41

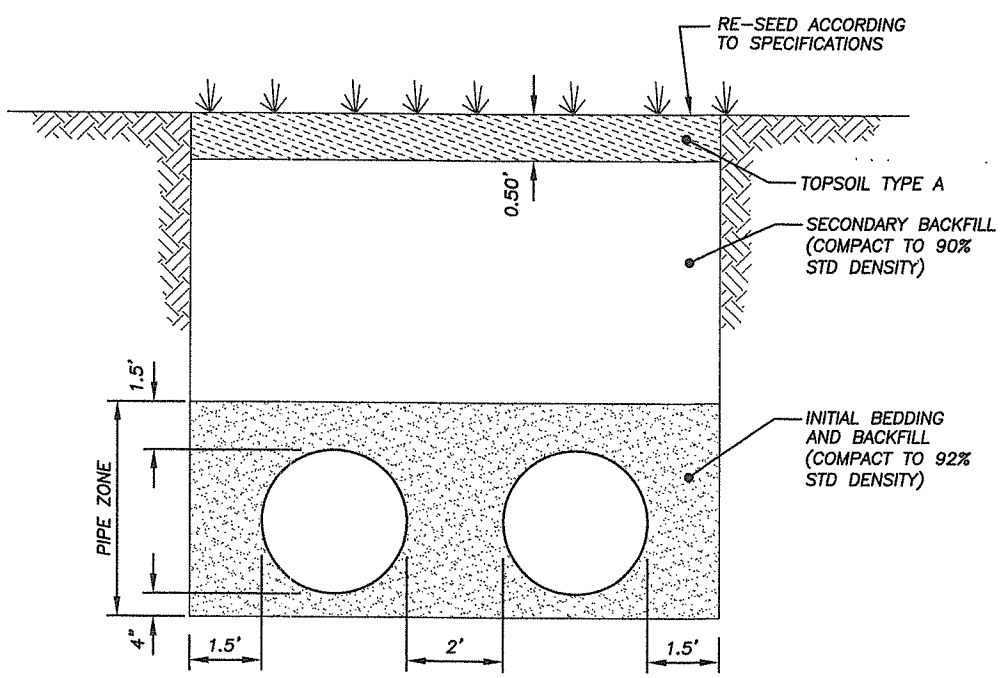

DUAL 36" FORCE MAINS

OUT OF ROADWAY

SAN LINE 'B' STATIONING
STA. 10+69.70 TO STA. 12+03.09
STA. 15+44.41 TO STA. 19+00

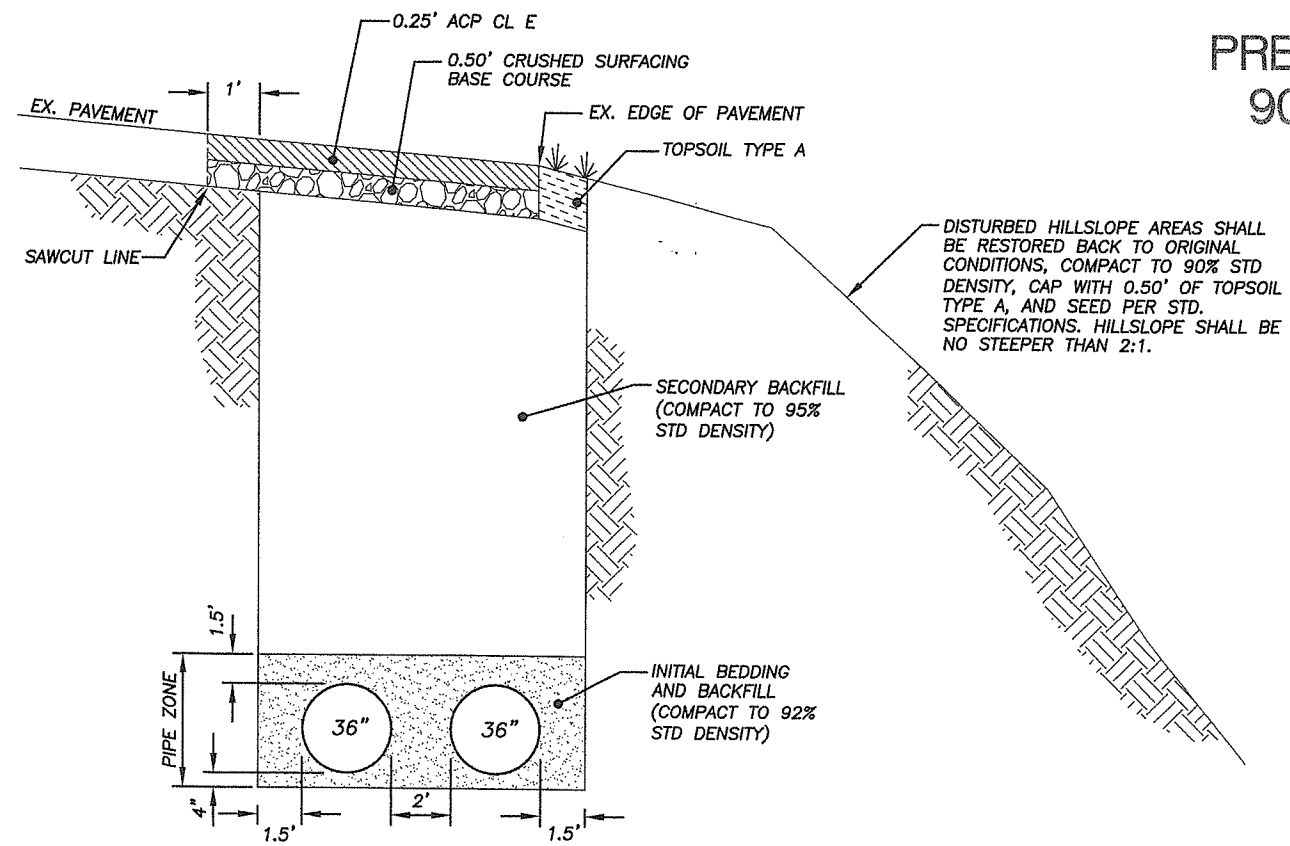

DUAL 36" FORCE MAINS

BALL FIELDS ACCESS ROAD

SAN LINE 'B' STATIONING
STA. 9+60.53 TO STA. 10+69.70

PRELIMINARY
90% SET

DESIGNED	
DRAWN	
CRP	381022
HOR.	NO SCALE
VERT.	N/A
DATE	10-01-04
DWG:	SA15
SHEET	OF

CALL 48 HOURS BEFORE YOU DIG 1-800-553-4344 "It's the Law" NORTHWEST UTILITIES NOTIFICATION CENTER

STATE OF WASHINGTON DONALD J. MOTT 23994 REGISTERED PROFESSIONAL ENGINEER
EXPIRES: JUNE 22, 2005

MacKay & Sposito, Inc. M&S
ENGINEERS SURVEYORS PLANNERS
8338 NE 117th AVENUE, VANCOUVER, WA 98662 (360) 256-3341
1325 SE TECH CENTER DRIVE, STE 140, VANCOUVER, WA 98683 (360) 256-5141

DESIGN & ENGINEERING DIVISION

NW 119TH/117TH STREET
PROPOSED SANITARY FORCE MAINS

proud past, promising future
CLARK COUNTY WASHINGTON

DATE PLOTTED: Oct 01, 2004 - 3:03pm M&S DRAWING FILE: W:\13800\13866\4-DESIGN\DWGS\Task 3 Force Main 7th-119th\FINAL DESIGN - TASK 3.2\13866det01s.dwg

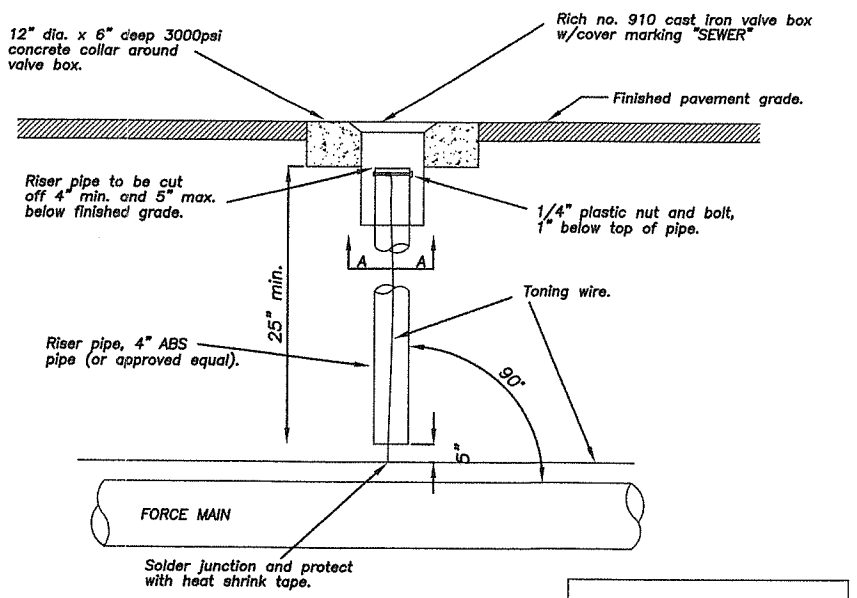

STANDARD LOCATOR STATION

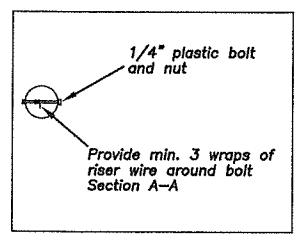

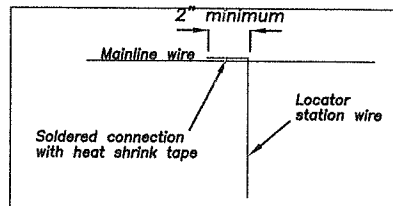

Toning wire connection schematic

1. Bare mainline toning wire (do not sever).
2. Solder house toning wire to mainline (minimum 2" solder cap).
3. Encase with 3M scotch #2200 vynal mastic pads (3 1/2" by 4 1/2) or 3M Scotch 33 electrical tape and and coated with scotchkote electrical coating #1485 (repeat process after first coating dries), or approved equal.
4. Mainline toning wire shall be one piece – no splices.
5. Individual locator station toning wires shall be one piece.

LOCATOR STATION DETAIL

PRELIMINARY
90% SET

DESIGNED
DRAWN
CRP 381022
HOR. NO SCALE
VERT. N/A
DATE 10-01-04
DWG: SA16
SHEET OF

CALL 48 HOURS BEFORE YOU DIG
1-800-553-4344
"It's the Law"
NORTHWEST UTILITIES NOTIFICATION CENTER

DONALD L. MOE
STATE OF WASHINGTON
22594
REGISTERED PROFESSIONAL ENGINEER
EXPIRES: JUNE 22, 2005

MacKay & Sposito, Inc.
ENGINEERS SURVEYORS PLANNERS
1323 SE TECH CENTER DRIVE, SUITE 140 VANCOUVER, WA 98683
(360) 695-3411 (800) 338-6325 FAX (360) 695-8223

DESIGN & ENGINEERING DIVISION

NW 119TH/117TH STREET
PROPOSED SANITARY FORCE MAINS

proud past, promising future
CLARK COUNTY
WASHINGTON

DATE PLOTTED: Oct 01, 2004 – 3:03pm MAS DRAWING FILE: W:\13800\13866\4-DESIGN\DWGS\Task 3 Force Main 7th-119th\FINAL DESIGN – TASK 3.2\13866details.dwg

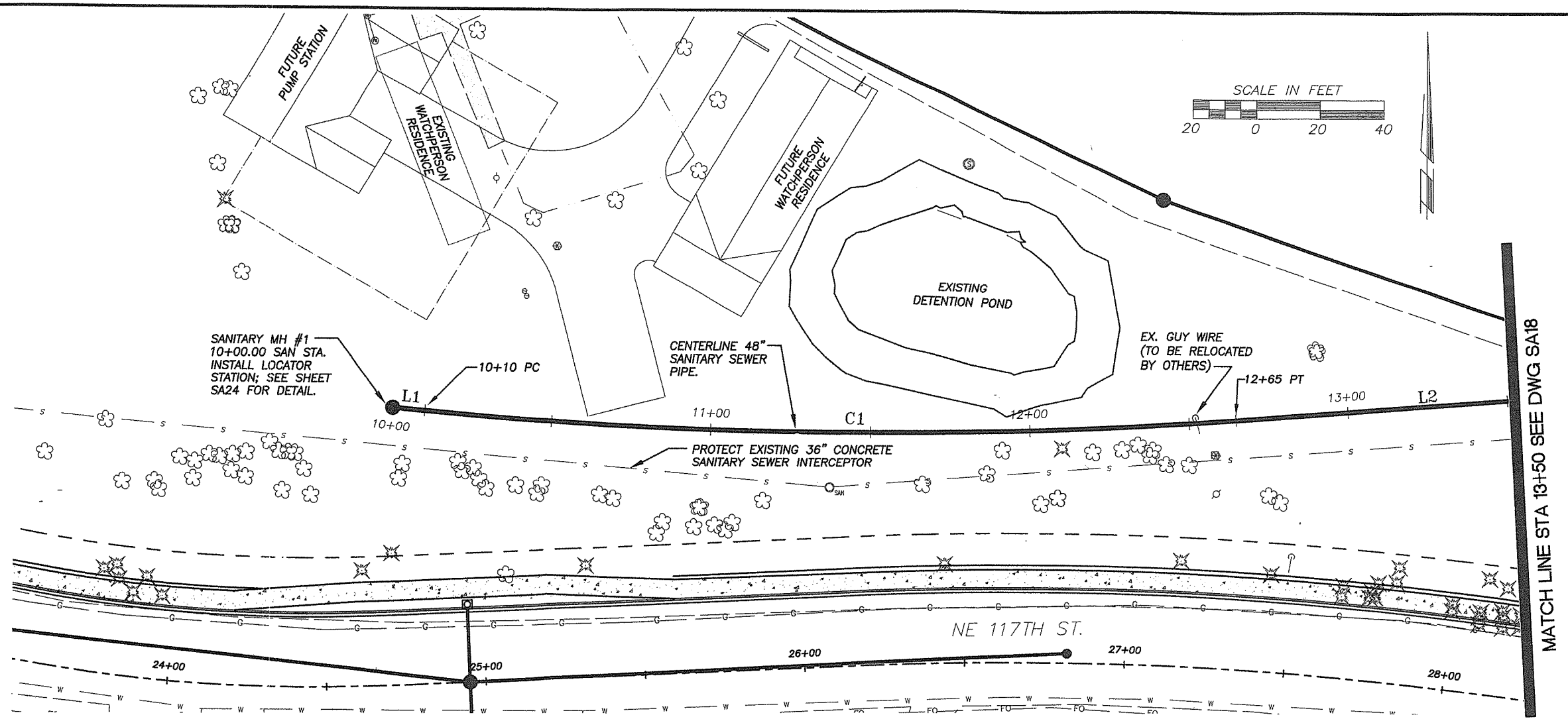

GENERAL NOTES:

1. EXISTING TOPOGRAPHY AND LINE WORK ON THESE DRAWINGS WERE OBTAINED FROM DESIGN PLANS FOR CLARK COUNTY ROAD PROJECT NO. 381022, NE 117TH/119TH STREET AND PROJECT NO. 320322 NE 117TH STREET, HAZEL DELL AVENUE TO NE KLINELINE ROAD.

LINE TABLE		
LINE	LENGTH	BEARING
L1	10.12'	S84°45'32"E
L2	194.68'	N85°30'58"E

CURVE TABLE			
CURVE	LENGTH	RADIUS	DELTA
C1	254.60'	1500.00'	9°43'29"

100% SET

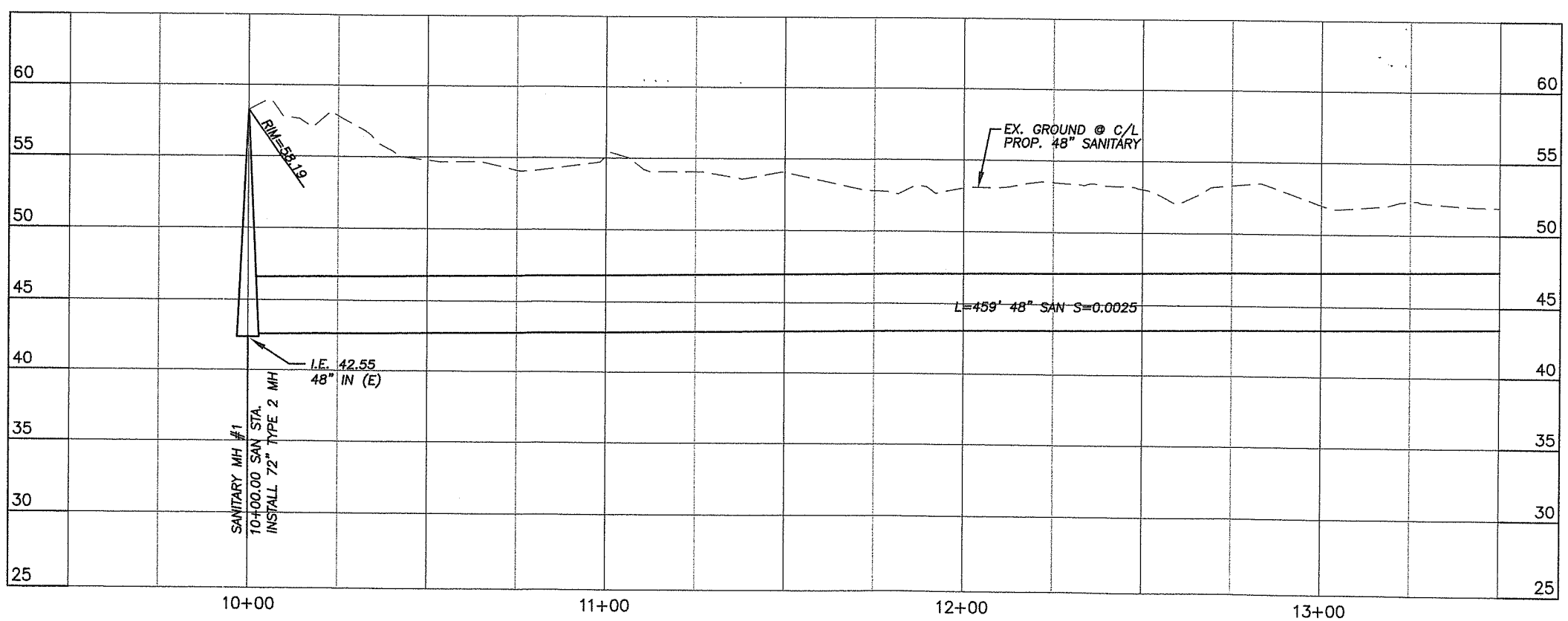

SCALE IN FEET
10 5 0 5

SCALE IN FEET
20 0 20 40

DESIGNED TK
DRAWN AF/SN
CRP 381022
HOR. AS SHOWN
VERT. AS SHOWN
DATE 10-01-04
DWG: SA17
SHEET OF

CALL 48 HOURS BEFORE YOU DIG 1-800-553-4344 "It's the Law" NORTHWEST UTILITIES NOTIFICATION CENTER

STATE OF WASHINGTON MICHAEL J. NOE 22394 REGISTERED PROFESSIONAL ENGINEER
EXPIRES: JUNE 22, 2005

MacKay & Sposito, Inc. ENGINEERS SURVEYORS PLANNERS 12965 SE 32nd AVENUE, BELLEVUE, WASHINGTON 98005 (253) 95-3411 VANCOUVER, WA 98683 (503) 294-0749 PHD

DESIGN & ENGINEERING DIVISION

NW 119TH/117TH STREET
PROPOSED SANITARY LINE

proud past, promising future
CLARK COUNTY WASHINGTON

DATE PLOTTED: Oct 01, 2004 - 3:05pm M&S DRAWING FILE: W:\3800\13866\4-DESIGN\DWGS\Task 3 Force Main 7th-119th\13652\13652 alon-profile.dwg

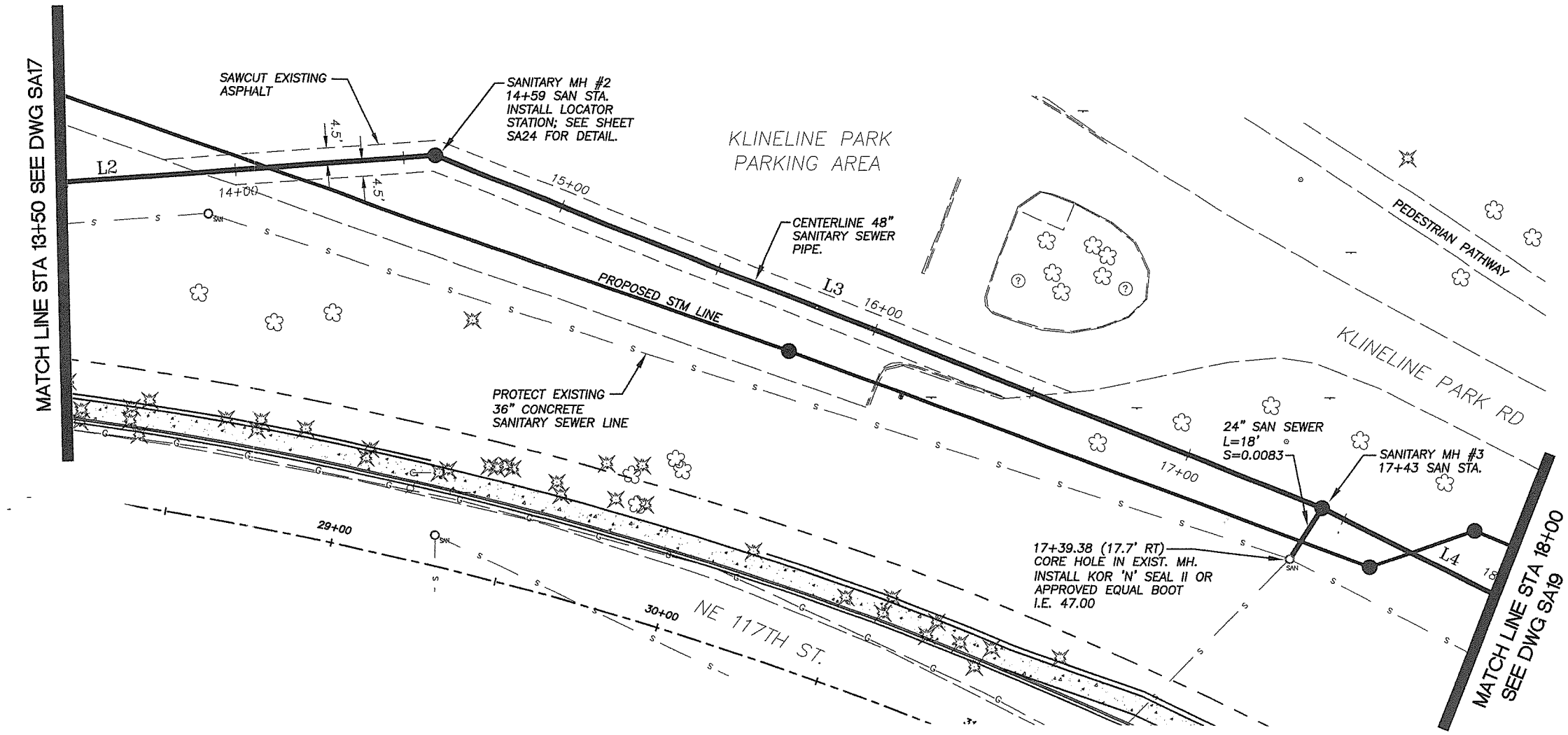

GENERAL NOTES:

1. EXISTING TOPOGRAPHY AND LINE WORK ON THESE DRAWINGS WERE OBTAINED FROM DESIGN PLANS FOR CLARK COUNTY ROAD PROJECT NO. 381022, NE 117TH/119TH STREET AND PROJECT NO. 320322 NE 117TH STREET, HAZEL DELL AVENUE TO NE KLINELINE ROAD.

LINE TABLE		
LINE	LENGTH	BEARING
L2	194.68'	N85°30'58"E
L3	283.37'	S68°33'51"E
L4	382.35'	S63°32'15"E

100% SET

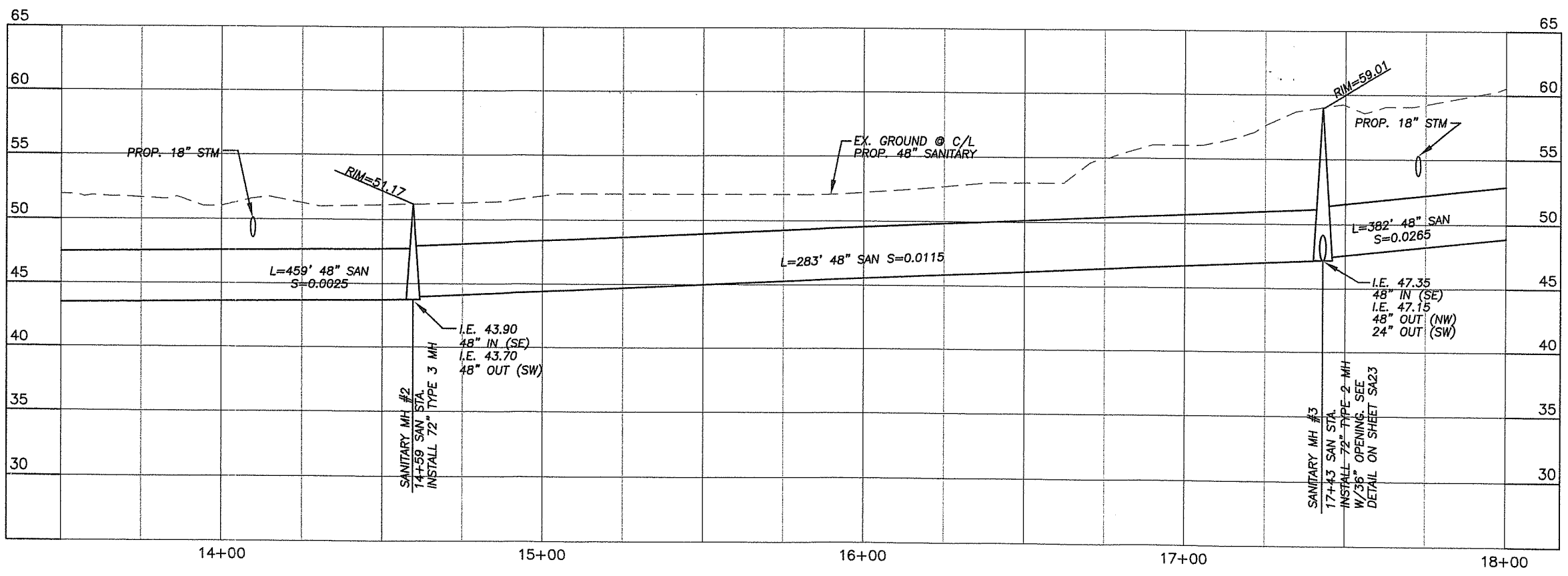

SCALE IN FEET
5 0 5 10

SCALE IN FEET
20 0 20 40

DESIGNED TK
DRAWN AF/SN
CRP 381022
HOR. AS SHOWN
VERT. AS SHOWN
DATE 10-01-04
DWG: SA18
SHEET OF

CALL 48 HOURS BEFORE YOU DIG 1-800-553-4344 "It's the Law" NORTHWEST UTILITIES NOTIFICATION CENTER

DONALD J. MOE STATE OF WASHINGTON 22994 REGISTERED PROFESSIONAL ENGINEER
EXPIRES: JUNE 22, 2006

MacKay & Sposito, Inc. ENGINEERS SURVEYORS PLANNERS
1335 SE TECH CENTER DRIVE, SUITE 140 VANCOUVER, WA 98683
(360) 695-3411 (800) 258-6725 FTLD FAX (360) 695-0633

DESIGN & ENGINEERING DIVISION

NW 119TH/117TH STREET
PROPOSED SANITARY LINE

proud past, promising future
CLARK COUNTY WASHINGTON

DATE PLOTTED: Oct 01, 2004 - 3:06pm M&S DRAWING FILE: W:\13800\13866\4-DESIGN\DWGS\Task 3 Force Main 7th-119th\13652\13652 plan-profile.dwg

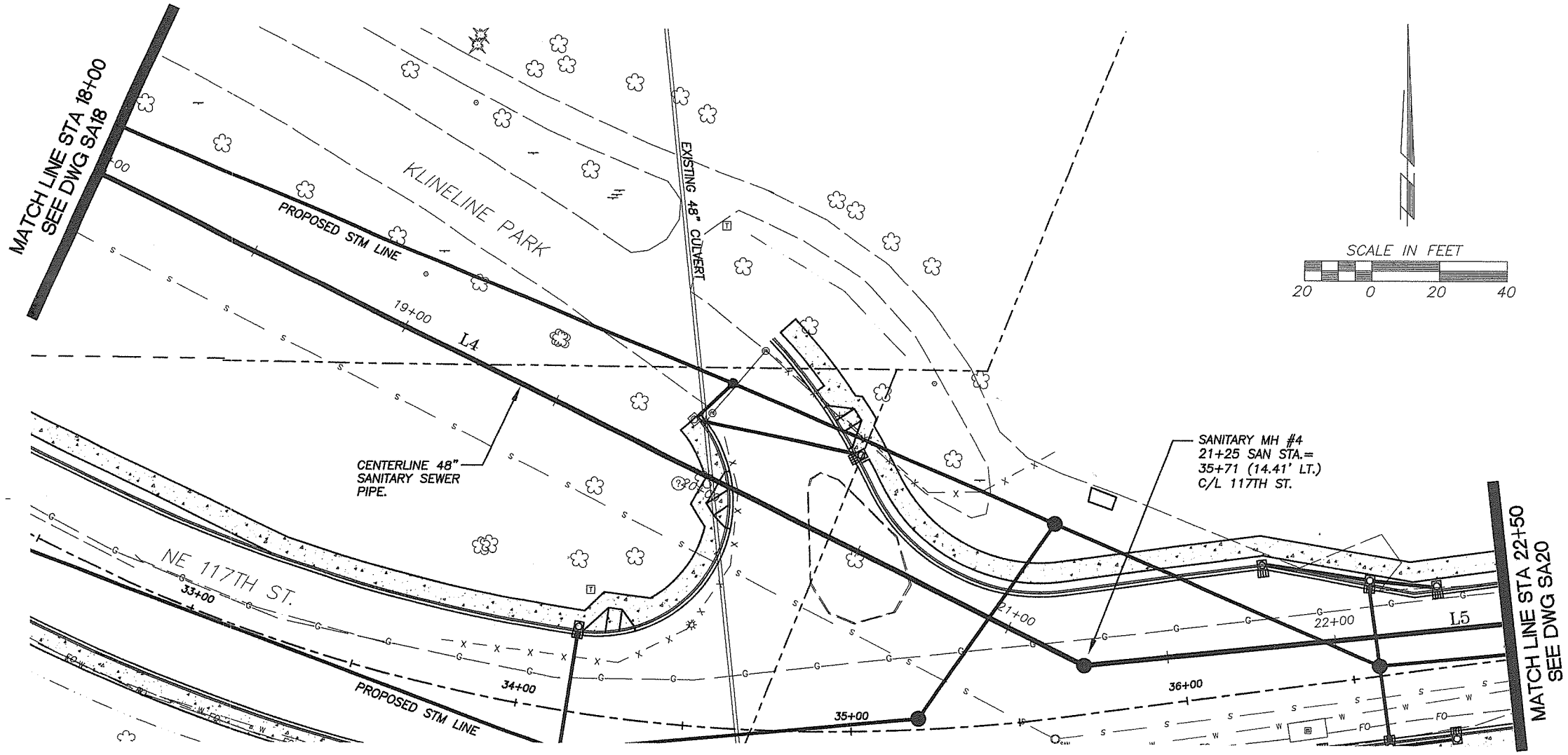

GENERAL NOTES:

1. EXISTING TOPOGRAPHY AND LINE WORK ON THESE DRAWINGS WERE OBTAINED FROM DESIGN PLANS FOR CLARK COUNTY ROAD PROJECT NO. 381022, NE 117TH/119TH STREET AND PROJECT NO. 320322 NE 117TH STREET, HAZEL DELL AVENUE TO NE KLINELINE ROAD.

LINE TABLE		
LINE	LENGTH	BEARING
L4	382.35'	S63°32'15"E
L5	373.18'	N83°55'07"E

100% SET

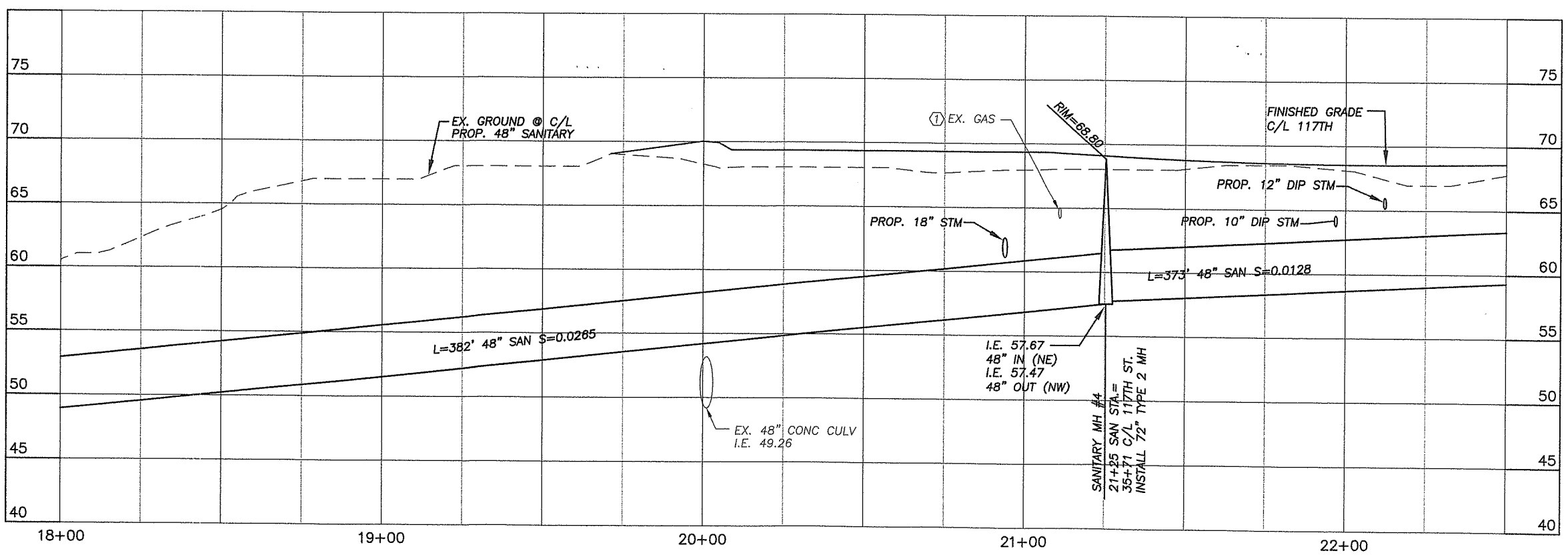

NOTE:

1. DEPTH OF UTILITY IS APPROXIMATE, NOT FIELD TIED

SCALE IN FEET
10 5 0 5

SCALE IN FEET
20 0 20 40

DESIGNED	TK
DRAWN	AF/SN
CRP	381022
HOR.	AS SHOWN
VERT.	AS SHOWN
DATE	10-01-04
DWG:	SA19
SHEET	OF

CALL 48 HOURS BEFORE YOU DIG 1-800-553-4344 "It's the Law" NORTHWEST UTILITIES NOTIFICATION CENTER

STATE OF WASHINGTON MICHAEL D. SPOSITO 22594 PROFESSIONAL ENGINEER SURVEYOR

EXPIRES: JUNE 23, 2005

MacKay & Sposito, Inc. M&S
ENGINEERS SURVEYORS PLANNERS
12405 SE FLAM STREET, SUITE 100 VANCOUVER, WA 98684
(360) 695-3411 (503) 226-9290 FAX (360) 695-3582

DESIGN & ENGINEERING DIVISION

NW 119TH/117TH STREET
PROPOSED SANITARY LINE

proud past, promising future
CLARK COUNTY WASHINGTON

DATE PLOTTED: Oct 01, 2004 - 3:06pm M&S DRAWING FILE: W:\38600\38666\4-DESIGN\DWGS\Task 3 Force Main 7th-119th\38652\38652 plan-profile.dwg

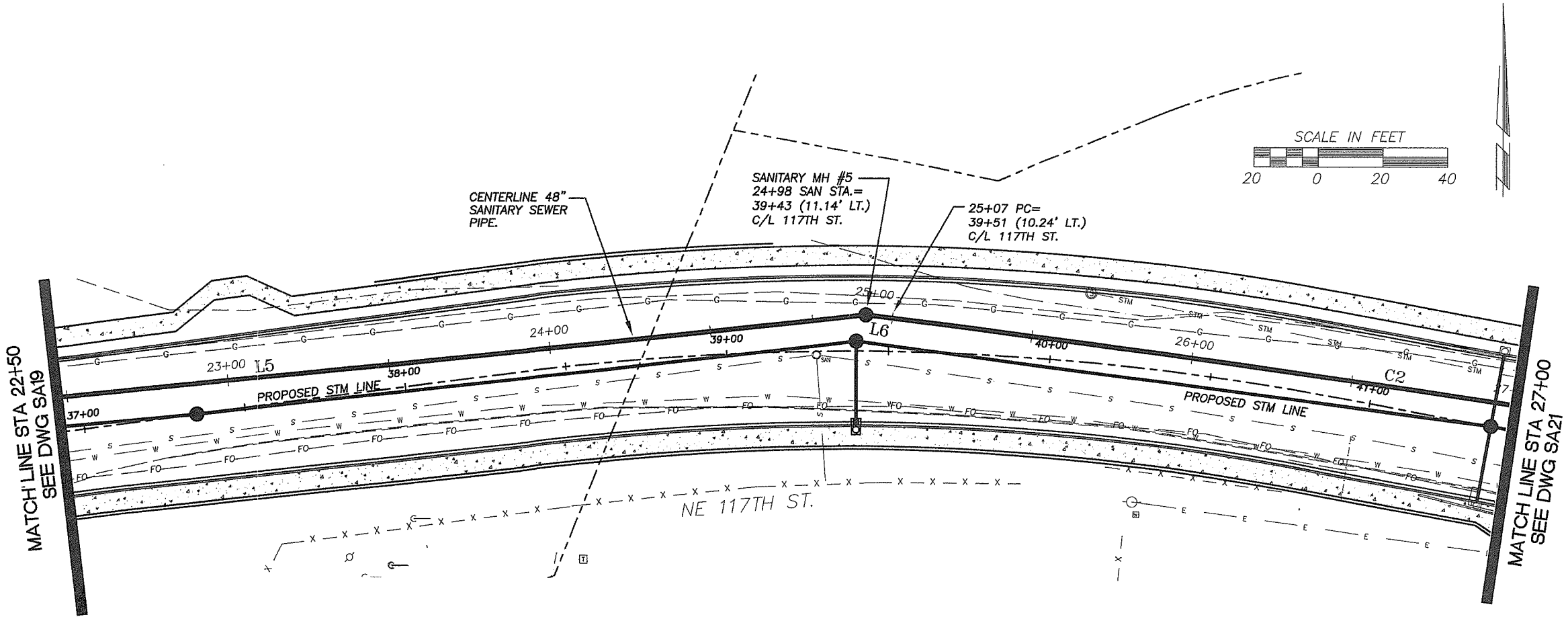

GENERAL NOTES:

1. EXISTING TOPOGRAPHY AND LINE WORK ON THESE DRAWINGS WERE OBTAINED FROM DESIGN PLANS FOR CLARK COUNTY ROAD PROJECT NO. 381022, NE 117TH/119TH STREET AND PROJECT NO. 320322 NE 117TH STREET, HAZEL DELL AVENUE TO NE KLINELINE ROAD.

LINE TABLE		
LINE	LENGTH	BEARING
L5	373.18'	N83°55'07"E
L6	8.25'	S83°12'07"E

CURVE TABLE			
CURVE	LENGTH	RADIUS	DELTA
C2	357.15'	5300.00'	3°51'39"

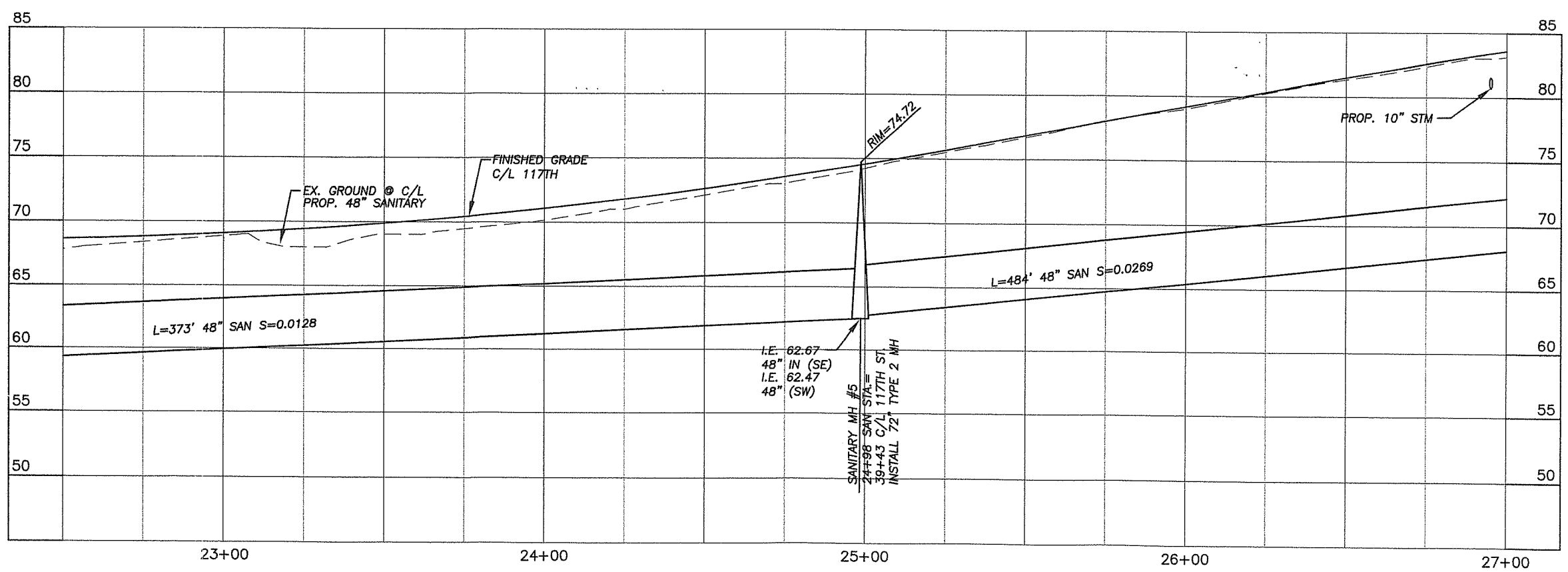

100% SET

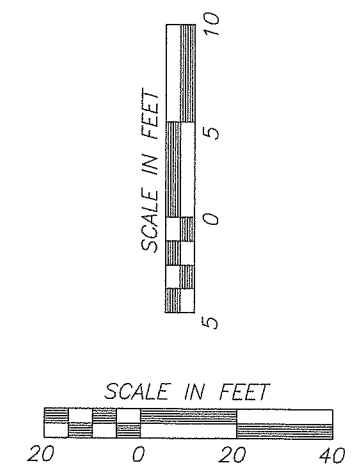

DESIGNED	TK
DRAWN	AF/SN
CRP	381022
HOR.	AS SHOWN
VERT.	AS SHOWN
DATE	10-01-04
DWG:	SA20
SHEET	OF

CALL 48 HOURS BEFORE YOU DIG 1-800-553-4344 "It's the Law" NORTHWEST UTILITIES NOTIFICATION CENTER

STATE OF WASHINGTON ENGINEER MICHAEL J. MOE 22394 REGISTERED PROFESSIONAL ENGINEER

EXPIRES: JUNE 27, 2005

Mackay & Sposito, Inc. M&S
ENGINEERS SURVEYORS PLANNERS
1363-B5 TECH CENTER DRIVE, SUITE 140 VANCOUVER, WA 98683
(360) 696-9411 (360) 892-0117 FAX (360) 892-0220

DESIGN & ENGINEERING DIVISION

NW 119TH/117TH STREET
PROPOSED SANITARY LINE

proud past, promising future
CLARK COUNTY WASHINGTON

DATE PLOTTED: Oct. 01, 2004 - 3:06pm M&S DRAWING FILE: W:\13800\13866\4-DESIGN\DWGS\Task 3 Force Main 7th-119th\13852\13852 plan-profile.dwg

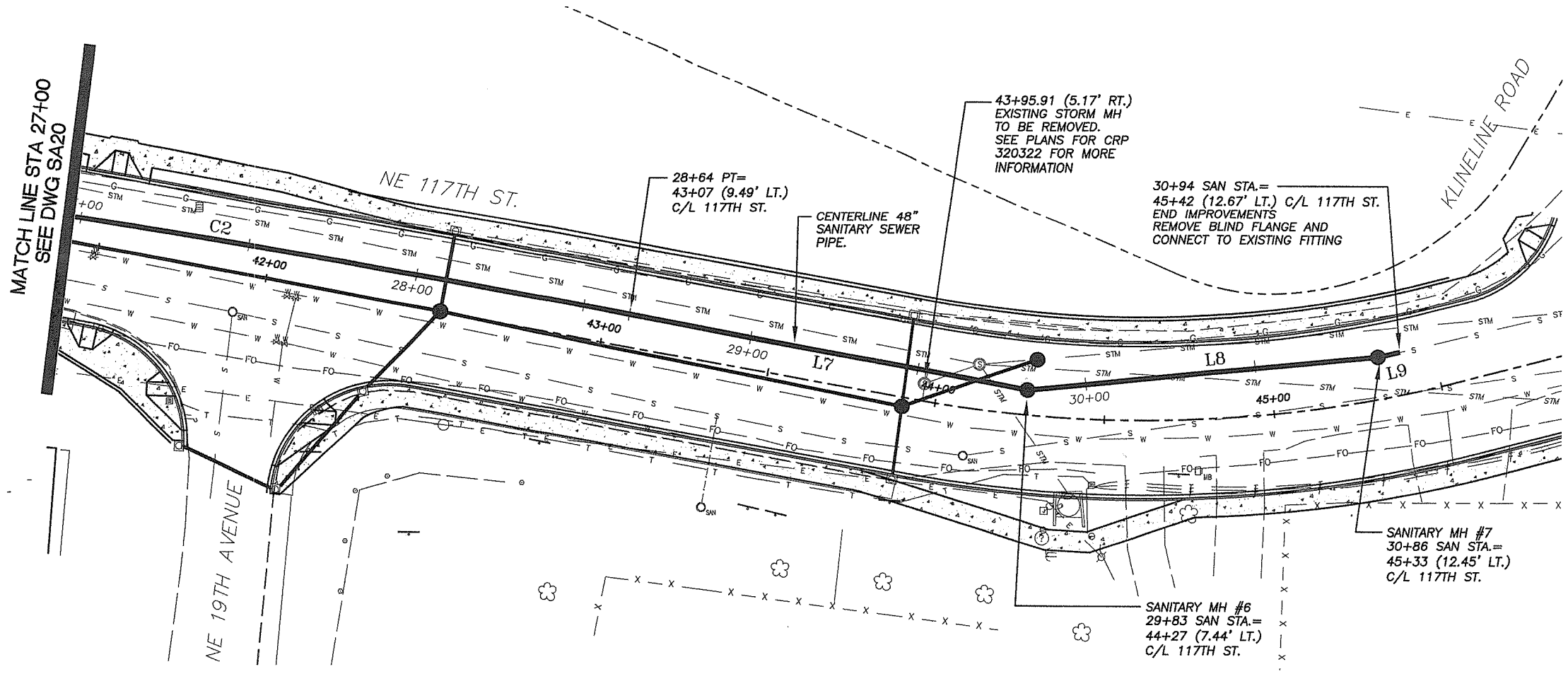

GENERAL NOTES:

1. EXISTING TOPOGRAPHY AND LINE WORK ON THESE DRAWINGS WERE OBTAINED FROM DESIGN PLANS FOR CLARK COUNTY ROAD PROJECT NO. 381022, NE 117TH/119TH STREET AND PROJECT NO. 320322 NE 117TH STREET, HAZEL DELL AVENUE TO NE KLINELINE ROAD.

SCALE IN FEET
20 0 20 40

LINE TABLE		
LINE	LENGTH	BEARING
L7	119.07'	S79°20'28"E
L8	103.59'	N84°15'59"E
L9	8.00'	N76°38'34"E

CURVE TABLE			
CURVE	LENGTH	RADIUS	DELTA
C2	357.15'	5300.00'	3°51'39"

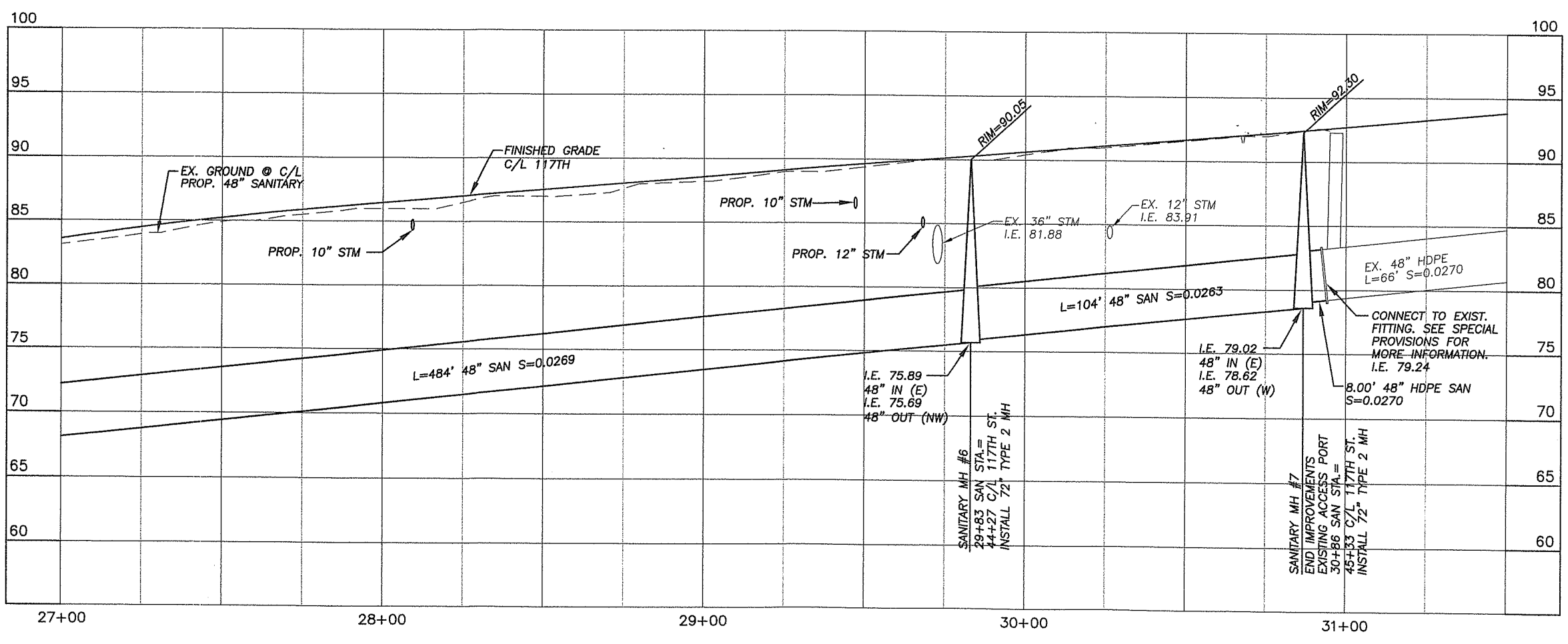

100% SET

SCALE IN FEET
10 5 0 5

SCALE IN FEET
20 0 20 40

DESIGNED	TK
DRAWN	AF/SN
CRP	381022
HOR.	AS SHOWN
VERT.	AS SHOWN
DATE	10-01-04
DWG:	SA21
SHEET	OF

CALL 48 HOURS BEFORE YOU DIG 1-800-553-4344 "It's the Law" NORTHWEST UTILITIES NOTIFICATION CENTER

STATE OF WASHINGTON MICHAEL S. SPOSATO 22815 PROFESSIONAL ENGINEER
EXPIRES: JUNE 23, 2005

MacKay & Sposito, Inc.
ENGINEERS SURVEYORS PLANNERS
8338 NE 117th AVENUE VANCOUVER, WA 98662
(360) 896-9411 (503) 256-0575 FAX (360) 896-9583

DESIGN & ENGINEERING DIVISION

NW 119TH/117TH STREET
PROPOSED SANITARY LINE

proud past, promising future
CLARK COUNTY
WASHINGTON

DATE PLOTTED: Oct 01, 2004 - 3:07pm M&S DRAWING FILE: W:\13800\13866\14-DESIGN\DWGS\Task 3 Force Main 7th-119th\13652\13652 plan-profile.dwg

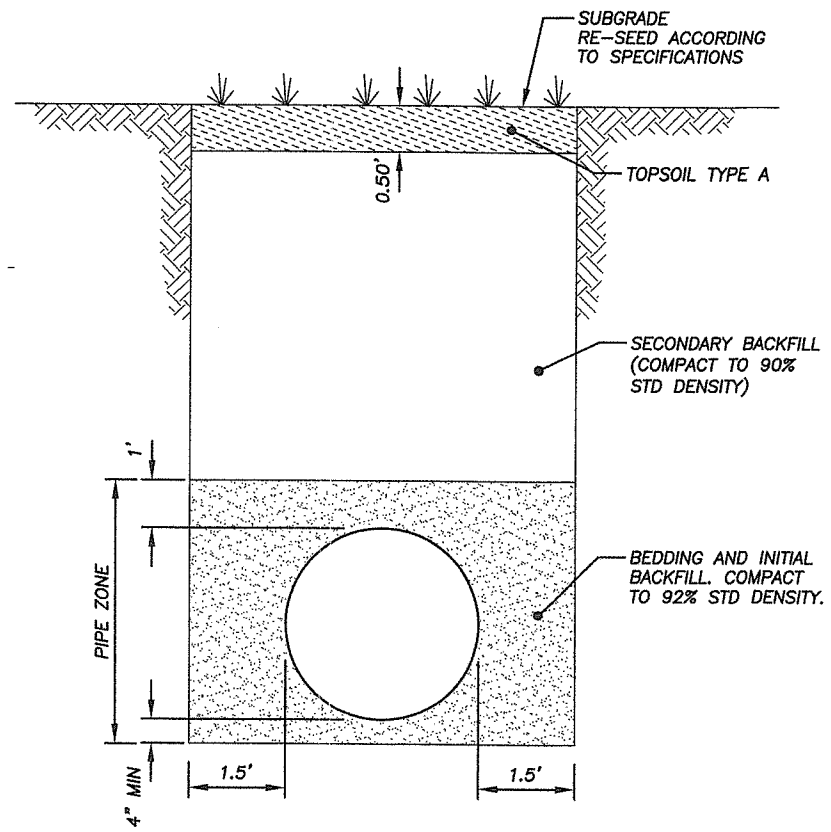

48" GRAVITY LINE

OUT OF ROADWAY

STA. 10+00 TO STA. 13+89.22
STA. 16+52.26 TO STA. 19+99.28

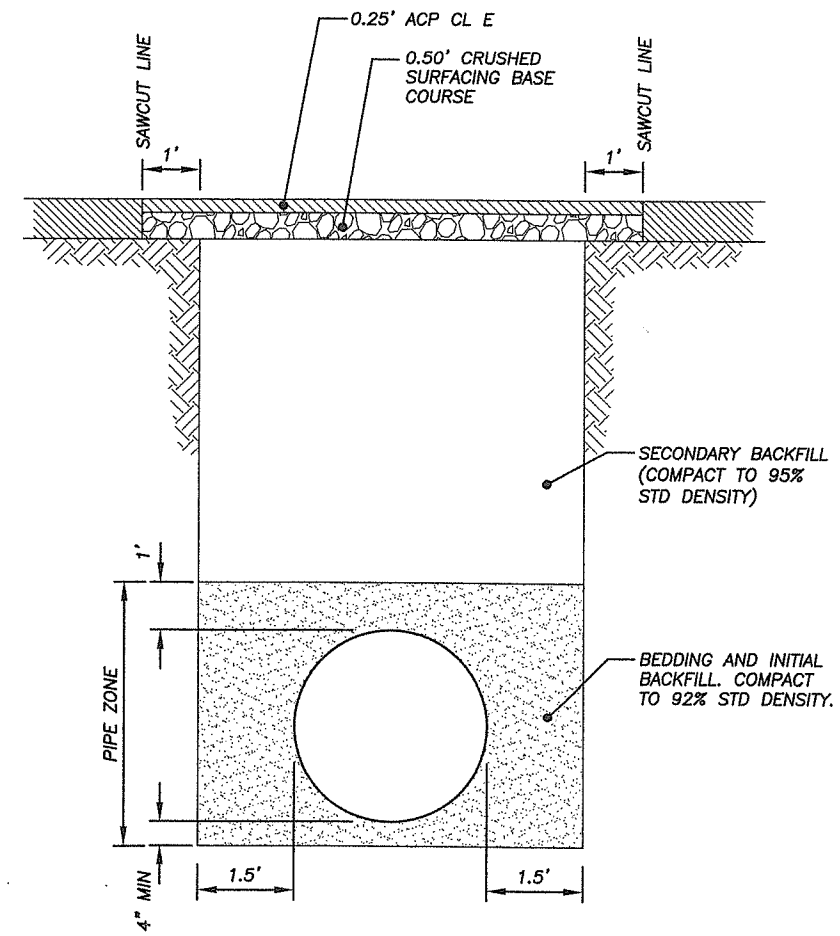

48" GRAVITY LINE

KLINELINE PARKING LOT

STA. 13+89.22 TO STA. 16+52.26

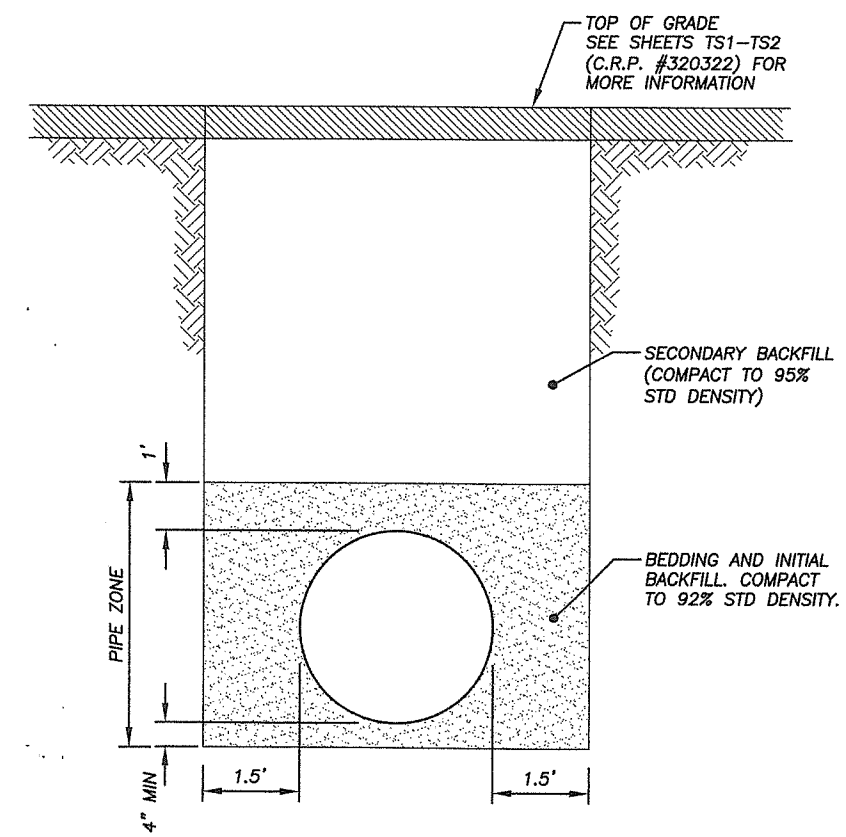

48" GRAVITY LINE

UNDER PAVEMENT

STA. 19+99.28 TO STA. 30+94

100% SET

DESIGNED
DRAWN
CRP 381022
HOR. AS SHOWN
VERT. N/A
DATE 10-01-04
DWG: SA22
SHEET OF

CALL 48 HOURS BEFORE YOU DIG
1-800-553-4344
"It's the Law"
NORTHWEST UTILITIES NOTIFICATION CENTER

STATE OF WASHINGTON
RONALD J. MOSER
22994
REGISTERED PROFESSIONAL ENGINEER
EXPIRES: JUNE 22, 2005

MacKay & Sposito, Inc.
ENGINEERS SURVEYORS PLANNERS
1328 SE 192nd CENTER DRIVE, SUITE 100 VANCOUVER, WA 98683
(360) 690-9411 (360) 576-0137 FAX (360) 690-9423

DESIGN & ENGINEERING DIVISION

NW 119TH/117TH STREET
PROPOSED SANITARY FORCE MAINS

proud past, promising future
CLARK COUNTY
WASHINGTON

DATE PLOTTED: Oct 01, 2004 – 3:09pm M&S DRAWING FILE: W:\13800\13866\4-DESIGN\DWGS\Task 3 Force Main 7th-119th\13652\13652details.dwg

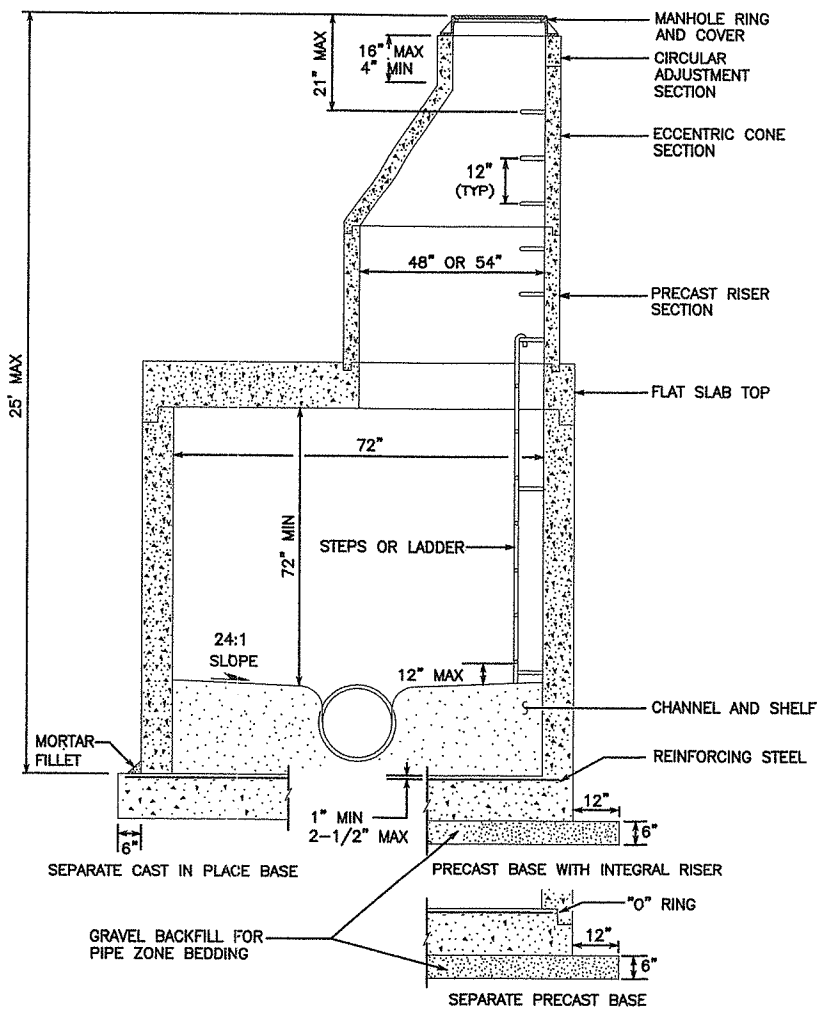

MANHOLE TYPE 2

NOTE
KNOCKOUTS SHALL HAVE A WALL THICKNESS OF 2" MINIMUM TO 2-1/2" MAXIMUM.

MANHOLE DIMENSION TABLE						
DIA	WALL THICKNESS	BASE THICKNESS	MAXIMUM KNOCKOUT SIZE	MINIMUM DISTANCE BETWEEN KNOCKOUTS	BASE REINFORCING STEEL in 2/ft IN EACH DIRECTION	
					INTEGRAL BASE	SEPARATE BASE
72"	6"	8"	60"	12"	0.24	0.35
96"	8"	12"	84"	12'	0.29	0.39

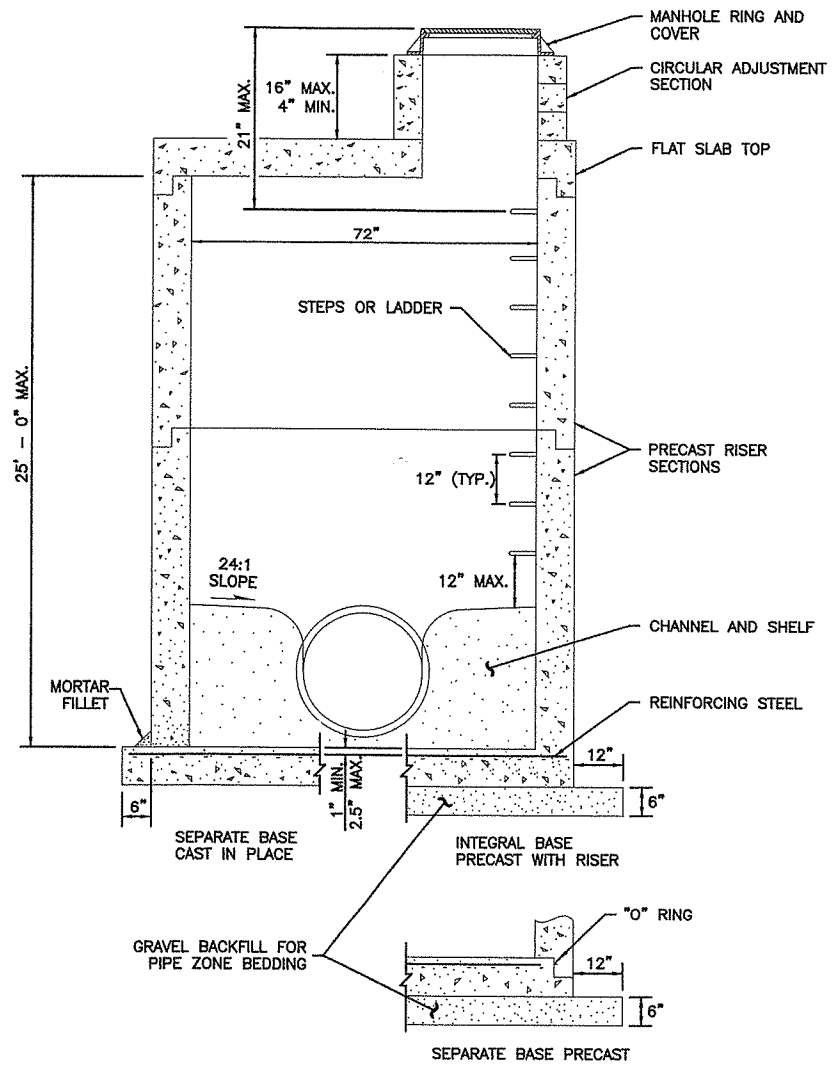

MANHOLE TYPE 3

NOTE
KNOCKOUTS SHALL HAVE A WALL THICKNESS OF 2" MINIMUM TO 2.5" MAXIMUM.

MANHOLE DIMENSION TABLE						
MANHOLE DIAMETER	WALL THICKNESS	BASE THICKNESS	MAXIMUM KNOCKOUT SIZE	MINIMUM DISTANCE BETWEEN KNOCKOUTS	BASE REINFORCING STEEL $in^{3}/_{ft}$ /ft IN EACH DIRECTION	
					INTEGRAL	SEPARATE
48"	4"	6"	36"	8"	0.15	0.23
54"	4.5"	8"	42"	8"	0.19	0.19
60"	5"	8"	48"	8"	0.25	0.25
72"	6"	8"	60"	12"	0.24	0.35
84"	8"	12"	72"	12"	0.29	0.39
96"	8"	12"	84"	12"	0.29	0.39

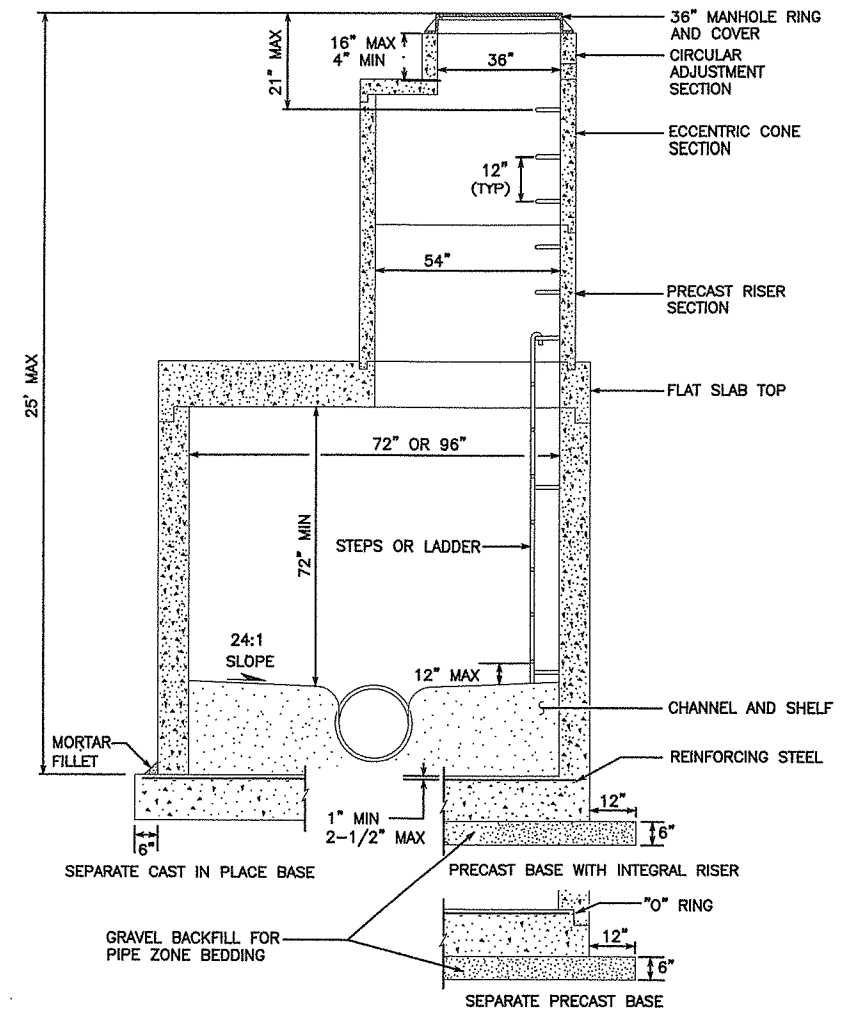

MANHOLE TYPE 2 W/36" OPENING

100% SET

DESIGNED
DRAWN
CRP: 381022
HOR. AS SHOWN
VERT. N/A
DATE 10-01-04
DWG: SA23
SHEET OF

CALL 48 HOURS BEFORE YOU DIG 1-800-553-4344 "It's the Law" NORTHWEST UTILITIES NOTIFICATION CENTER

RONALD J. MACKAY STATE OF WASHINGTON 22994 PROFESSIONAL ENGINEER REGISTERED
EXPIRES: JUNE 22, 2005

MacKay & Sposito, Inc. M&S
ENGINEERS SURVEYORS PLANNERS
1335 SE TECH CENTER DRIVE, SUITE 140 VANCOUVER, WA 98683
(360) 696-9411 (503) 684-6133 FAX (360) 696-9487

DESIGN & ENGINEERING DIVISION

NW 119TH/117TH STREET
PROPOSED SANITARY FORCE MAINS

proud past, promising future
CLARK COUNTY WASHINGTON

DATE PLOTTED: Oct 01, 2004 - 3:10pm M&S DRAWING FILE: W:\13600\13666\4-DESIGN\DWGS\Task 3 Force Main 7th-119th\13652\13652details.dwg

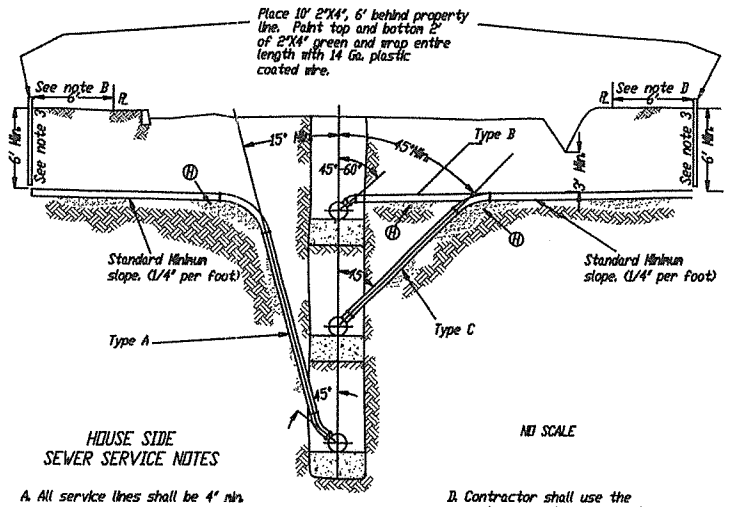

HOUSE SIDE SEWER SERVICE NOTES

NO SCALE

A. All service lines shall be 4" min.

B. All service lines shall terminate at the property line, with the exception of new subdivisions, which shall terminate 6' beyond the property line.

C. Depths of service lines at the property line shall be determined as follows:

1) Set to the elevation as noted on plans.

2) When the ground surface at the property line is higher than the edge of pavement, the service elevation shall be a min. of 6' lower than the edge of pavement elevation.

3) When the ground surface elevation at the property line is lower than the edge of pavement the service line shall have minimum 6' of cover at the property line.

4) Place at min. slope of 1/4" per foot (2%) when cover over lateral will be less then 5' (Type B).

D. Contractor shall use the most approp. type connection (A,B or C) as directed by the engineer.

E. All service connections shall be standard WYE branch fittings.

F. Inspection required prior to backfilling of all house services.

G. All house side sewers in traveled areas with less than 5' of cover shall be Class 52 D.I.P.

H. Bedding and backfill to conform with class of bedding and type of backfill specified for sewer line extension.

HAZEL DELL SEWER DISTRICT

TYPICAL HOUSE SIDE SEWER

Approved For Project Use
Revised 5/18/01

HAZEL DELL SEWER DISTRICT
STANDARD CONSTRUCTION DRAWINGS

10

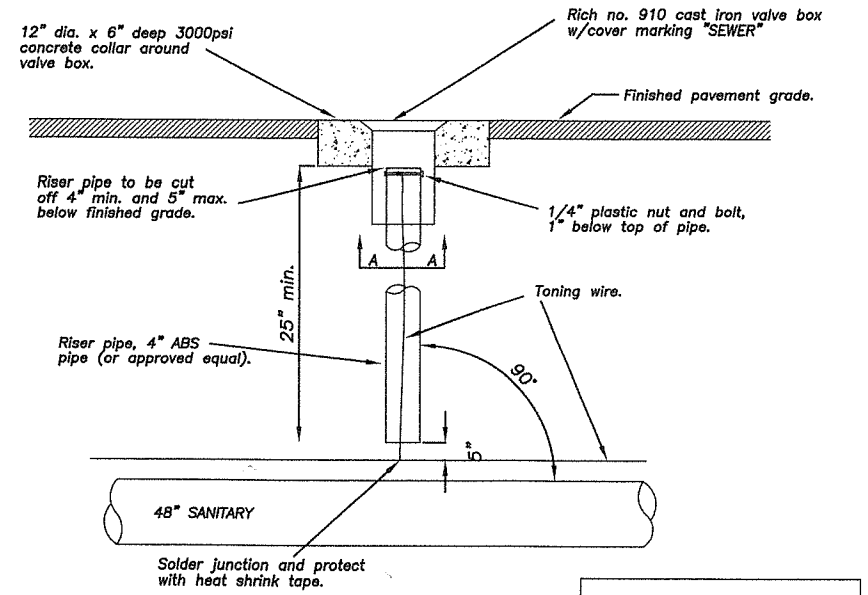

STANDARD LOCATOR STATION

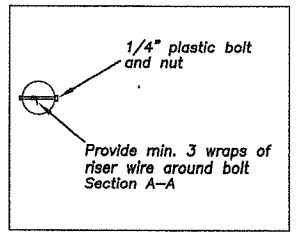

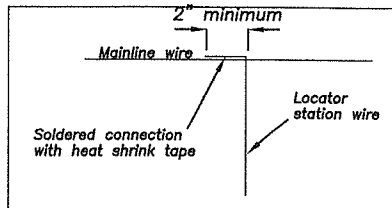

Toning wire connection schematic

1. Bare mainline toning wire (do not sever).
2. Solder house toning wire to mainline (minimum 2" solder cap).
3. Encase with 3M scotch #2200 vynal mastic pads (3 1/2" by 4 1/2) or 3M Scotch 33 electrical tape and and coated with scotchkote electrical coating #1485 (repeat process after first coating dries), or approved equal.
4. Mainline toning wire shall be one piece – no splices.
5. Individual locator station toning wires shall be one piece.

LOCATOR STATION DETAIL

100% SET

DESIGNED
DRAWN
CRP 381022
HOR. AS SHOWN
VERT. N/A
DATE 10-01-04
DWG: SA24
SHEET OF

CALL 48 HOURS BEFORE YOU DIG
1-800-553-4344
"It's the Law"
NORTHWEST UTILITIES NOTIFICATION CENTER

MacKay & Sposito, Inc.
ENGINEERS SURVEYORS PLANNERS
1325 SE TECH CENTER DRIVE, SUITE 140 VANCOUVER, WA 98683
(360) 695-3411 (800) 269-6728 FTLD FAX (360) 695-6033

DESIGN & ENGINEERING DIVISION

NW 119TH/117TH STREET
PROPOSED SANITARY FORCE MAINS

proud past, promising future
CLARK COUNTY WASHINGTON

DATE PLOTTED: Oct 01, 2004 – 3:10pm M&S DRAWING FILE: W:\13800\13866\4-DESIGN\DWGS\Task 3 Force Main 7th-119th\13652\13652details.dwg