CAPITAL IMPROVEMENTS PROGRAM
COUNTY ROAD PROJECT #381022 & #320322

NW 119TH STREET/NE 117TH STREET

FROM NW 7TH AVENUE TO HWY 99

PLANS FOR THE CONSTRUCTION OF
ROADWAY, RETAINING WALLS, STORM DRAINAGE, AND SIGNALIZATION

VOLUME 1 OF 2

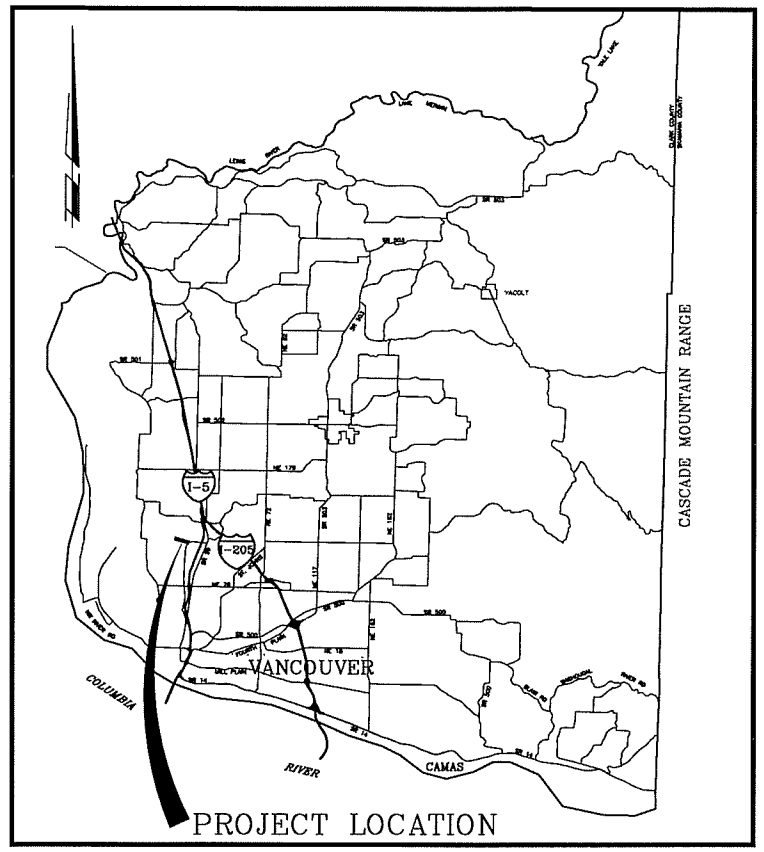

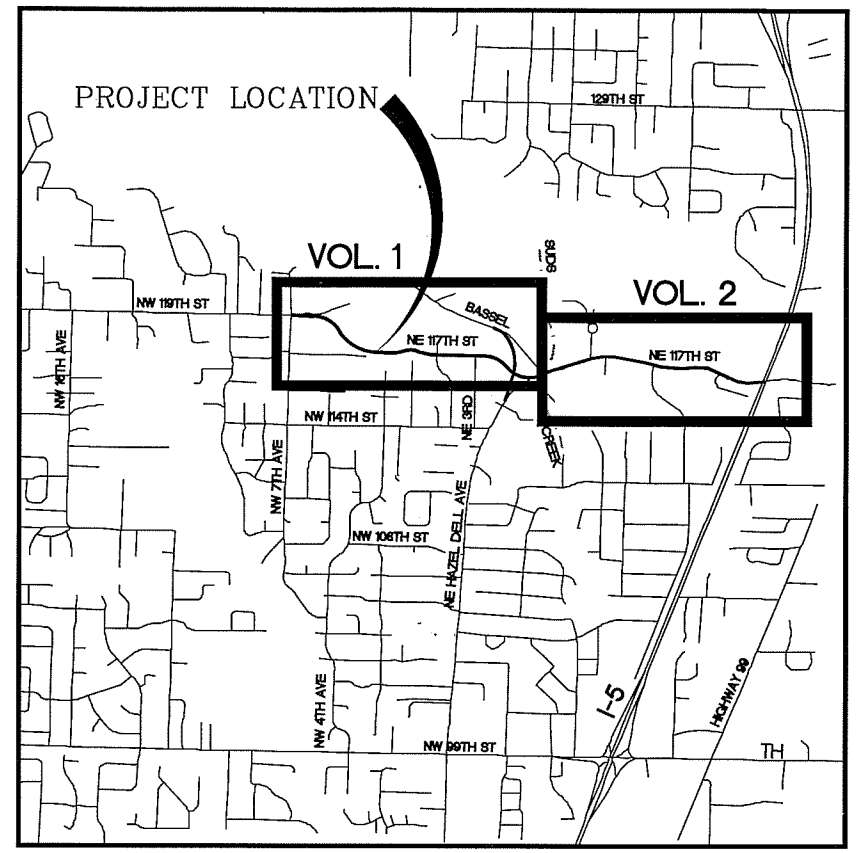

COMMISSIONERS:

BETTY SUE MORRIS, Chair
JUDIE STANTON, Commissioner
CRAIG A. PRIDEMORE, Commissioner

proud past, promising future
CLARK COUNTY
WASHINGTON

DEPARTMENT OF
PUBLIC WORKS

DESIGN AND ENGINEERING DIVISION- DESIGN SECTION

100% REVIEW SET

N:\CIP\PROJECTS\381022-NW117-119\DESIGN\DWGS\119COV-VOL1.dwg, Layout1, 10/12/2004 3:11:14 PM, beglerk

SUMMARY OF QUANTITIES - ROADWAY

ItemNum	BID ITEM	UNIT	QUANTITY	381022	320322
109.07	MOBILIZATION	L.S.	L.S.	L.S.	L.S.
109.10	MINOR CHANGE	CALC.	2	1	1
109.13	REPLACEMENT STAKING SERVICES	HOUR	20	10	10
109.15	TEMP CONSTRUCTION PERMIT/PROPERTY OWNER AGREEMENT	L.S.	L.S.	0	L.S.
	TRAFFIC CONTROL				
110.00	TRAFFIC CONTROL LABOR	HOUR	8200	3200	5000
110.10	TRAFFIC CONTROL SUPERVISOR	HOUR	2400	800	1600
110.21	TRAFFIC CONTROL VEHICLE	DAY	200	0	200
110.30	TEMPORARY TRAFFIC CONTROL DEVICES	L.S.	L.S.	L.S.	L.S.
110.31	PORTABLE CHANGEABLE MESSAGE SIGN	EACH	2	0	2
110.32	OPERATION OF PORTABLE CHANGEABLE MESSAGE SIGN	HOUR	500	0	500
110.40	CONSTRUCTION SIGNS CLASS "A"	S.F.	454	240	214
	PREPARATION				
201.01	CLEARING AND GRUBBING	ACRE	18.3	12.5	5.8
201.20	ROADSIDE CLEANUP	EST.	EST.	EST.	EST.
201.31	CREEK BED RESTORATION	L.S.	L.S.	L.S.	0
202.00	REMOVAL OF STRUCTURES AND OBSTRUCTION	L.S.	L.S.	L.S.	L.S.
110.31	REMOVAL OF BUILDING	EACH	5	3	2
202.00	DEMOLITION OF SEPTC TANKS - FORCE ACCOUNT	EST.	EST.	0	EST.
202.12	DECOMMISION WELL	EACH	1	1	0
	GRADING				
203.10	ROADWAY EXCAVATION (INCL. HAUL)	C.Y.	56380	47660	8720
203.12	WALKWAY EXCAVATION (INCL. HAUL)	C.Y.	220	220	0
203.15	STORMWATER FACILITY EXCAVATION (INCL HAUL)	C.Y.	32672	28830	3842
203.20	EMBANKMENT COMPACTION	C.Y.	48034	44250	3784
203.21	STORMWATER FACILITY EMBANKMENT COMPACTION	C.Y.	8689	7627	1062
207.00	WATER	MGAL	668	500	168
210.00	DITCH EXCAVATION (INCL. HAUL)	C.Y.	1465	0	1465
212.00	CONSTRUCTION GEOTEXTILE FOR SOIL STABILIZATION	S.Y.	5722	0	5722
212.00	CONSTRUCTION GEOTEXTILE FOR DITCH LINING	S.Y.	914	911	3
	IMPERMEABLE LINER	S.Y.	4783	0	4783
212.11	WETLAND BALLAST	S.Y.	10532	10532	0
	SURFACING				
404.50	CRUSHED SURFACING BASE COURSE	TON	48857	40389	8468
404.52	CRUSHED SURFACING TOP COURSE	TON	656	656	0
404.54	BALLAST (INCL. HAUL)	TON	6390	0	6390
	ASPHALT CONCRETE PAVEMENT				
504.02	ASPHALT CONCRETE PAVEMENT CL. A	TON	6043	3108	2935
504.03	ASPHALT CONCRETE PAVEMENT CL. E	TON	9716	4156	5560
504.11	SAWCUT EXISTING ASPHALT PAVEMENT	L.F.	1933	946	987
504.14	PLANING BITUMINOUS PAVEMENT	S.Y.	644	56	588
504.21	ASPHALT CONCRETE APPROACH CL A	S.Y.	1464	789	675
505.01	SAWCUT CEMENT CONC. PAVEMENT	L.F.	939	939	0
	STRUCTURES				
602.35	STRUCTURAL EARTH WALL W/ HANDRAIL	S.F.	9514	0	9514
602.56	COATED CHAIN LINK FENCE FOR WALL TYPE 6	L.F.	370	370	0
604.00	TIMBER STRUCTURE (WOODEN FOOTBRIDGE W/ PED. HANDRAIL	L.S.	L.S.	0	L.S.
606.05	HANDRAIL FOR WALL	L.F.	484	484	0
610.19	CONCRETE BARRIER W/ TYPE 3 ANCHORS	L.F.	13	0	13
610.26	CAST-IN-PLACE CONC. BARRIER/SIDEWALK	L.F.	484	484	0
612.30	NOISE BARRIER/RETAINING WALL DESIGN	L.S.	1	1	0
612.32	NOISE BARRIER/RETAINING WALL	S.F.	6252	6252	0
612.41	GEOGRID SOIL REINFORCEMENT FABRIC	S.Y.	3851	3851	0
612.49	CAST-IN-PLACE RETAINING WALL (WITH TYPE 1 FENCE)	S.F.	3441	0	3441
612.51	MODULAR / SEGMENTAL BLOCK RET. WALL (INCL. CAP UNIT)	S.F.	7056	7056	0
612.59	ECOLOGY BLOCK FOR WALL	EACH	351	351	0
615.00	BINWALL CATHODIC PROTECT.REPLACEMENT(CONTRACTOR DESIGN)	L.S.	L.S.	0	L.S.
	DRAINAGE STRUCTURES, STORM SEWER, UTILITIES				
701.12	PERFORATED UNDERDRAIN PIPE 12 IN. DIAM.	L.F.	10	10	0
701.18	PERFORATED UNDERDRAIN PIPE 18 IN. DIAM.	L.F.	238	0	238
702.18	CULVERT PIPE 18 IN. DIAM	L.F.	539	0	539
702.24	CULVERT PIPE 24 IN. DIAM	L.F.	115	115	0
703.01	ALUM ST. CULV. PIPE ARCH 0.075 IN. TH 60 IN. SPAN	L.F.	90	90	0
703.02	ALUM ST. CULV. PIPE ARCH 0.075 IN. TH 73 IN. SPAN	L.F.	111	111	0
704.10	STORM SEWER PIPE, 10 IN. DIAM.	L.F.	1433	1030	403
704.11	DUCTILE IRON STORM SEWER PIPE, 10 IN. DIAM.	L.F.	425	0	425
704.12	STORM SEWER PIPE, 12 IN. DIAM.	L.F.	3350	3311	39
704.18	STORM SEWER PIPE, 18 IN. DIAM.	L.F.	6712	3772	2940
	CORRUGATED STORM SEWER PIPE, 18 IN. DIAM.	L.F.	3241	301	2940
704.24	STORM SEWER PIPE, 24 IN. DIAM.	L.F.	23	23	0
	TRASH RACK	EACH	3	3	0
704.75	HDPE STORM SEWER PIPE, 18 IN. DIAM.	L.F.	240	0	240
705.00	CONSTRUCT MANHOLE 48 IN. DIAM OVER EXISTING SEWER LINE	EACH	1	1	0

705.01	MANHOLE 48 IN. DIAM. TYPE 1	EACH	20	20	0
705.14	MANHOLE 48 IN. DIAM. TYPE 3	EACH	50	28	22
705.14	MANHOLE 60 IN. DIAM. TYPE 3	EACH	2	2	0
705.18	MANHOLE 60 IN. DIAM. TYPE 3 WITH FLOW CONTROL	EACH	3	3	0
705.23	MANHOLE 96 IN. DIAM. TYPE 3	EACH	2	0	2
705.35	CATCH BASIN TYPE 1	EACH	1	1	0
705.50	MODIFIED INLET TYPE 2 (OUTLET STRUCTURE)	EACH	1	0	1
705.51	MODIFIED RISER OUTLET	EACH	1	1	0
705.62	CONCRETE CURB INLET	EACH	27	6	21
705.63	CONCRETE COMBINATION CURB INLET	EACH	46	30	16
705.64	CONCRETE DITCH INLET	EACH	11	5	6
705.70	AREA DRAIN/INLET	EACH	3	3	0
705.80	ADJUST MANHOLE/ CATCH BASIN/ INLET/ DRYWELL METHOD 1	EACH	40	17	23
705.85	ADJUST TELEPHONE MANHOLE	EACH	18	0	18
705.86	CONNECT TO DRAINAGE STRUCTURE	EACH	6	0	6
706.01	STANDARD PRECAST STORMFILTER UNIT	L.S.	L.S.	L.S.	0
706.51	LOG WEIR	EACH	7	7	0
708.00	TRENCH SAFETY SYSTEM	L.F.	8292	5047	3245
708.03	PLUGGING EXISTING PIPE	EACH	6	1	5
709.00	ADJUST WATER/GAS/SANITARY VALVE RIM, COVER & FRAME	EACH	33	23	10
	EROSION CONTROL AND PLANTING				
801.20	ESC LEAD	HOUR	750	250	500
801.21	EROSION CONTROL SEEDING AND MULCHING	ACRE	8.8	5.8	3
801.22	EROSION CONTROL BLANKET	S.Y.	17250	17250	
801.40	STABILIZED CONSTRUCTION ENTRANCE	EACH	5	4	1
801.41	TIRE WASH	EACH	5	4	1
801.50	INLET PROTECTION	EACH	99	42	57
801.51	SILT FENCE	L.F.	14355	6115	8240
801.52	WATTLE	L.F.	40	0	40
801.53	EROSION CONTROL & SPILL PREVENTION REINSPECTION FEE	EACH	2	1	1
801.57	SPCC PLAN	L.S.	L.S.	L.S.	L.S.
802.02	TOPSOIL TYPE B	C.Y.	1440	1440	0
802.24	PSIPE - 1.5 IN. CALIPER TREES (Prunus)	EACH	15	15	0
802.25	PSIPE - 1.5 IN. CALIPER TREES (Acer platanoides "Crimson Sentry")	EACH	42	42	0
802.40	PSIPE - SHRUB, EVERGREEN, 1 GAL. (Lavandul angustifolia)	EACH	534	534	0
802.45	PSIPE - SHRUB, EVERGREEN, 2 GAL. (Viburnum davidii)	EACH	271	271	0
802.51	PSIPE - SHRUB, DECIDUOUS, 2 GAL. (Spirea japonica "Goldflame")	EACH	343	343	0
802.63	PSIPE - GROUNDCOVER, 1 GAL (Arctostaphylos uva-ursi)	EACH	2521	2521	0
802.63	PSIPE - GROUNDCOVER, 1 GAL (Cottoneaster dammeri "Coral Beaut	EACH	1751	1751	0
802.70	WILLOW STAKES	L.S.	L.S.	0	L.S.
802.82	COMPOST AMENDED TOPSOIL	C.Y.	1300	0	1300
802.86	BARK MULCH	C.Y.	600	480	120
802.90	STORMWATER FACILITY SEEDING AND MULCHING	ACRE	2.7	2.7	
802.95	TURF REINFORCEMENT	S.F.	1168	1088	80
	BIOENGINEERED STREAMBANK PROTECTION	L.S.	L.S.	L.S.	0
	OTHER				
804.00	CEMENT CONC. TRAFFIC CURB	L.F.	430	430	0
804.01	CEMENT CONC. BARRIER CURB AND GUTTER	L.F.	20118	12766	7352
804.03	SINGLE-FACED MOUNTABLE CEMENT CONC. CURB	L.F.	150	150	0
804.20	EXTRUDED CURB, TYPE 1	L.F.	47	47	0
806.00	CEMENT CONCRETE APPROACH, 3-DAY	S.Y.	1014	467	547
811.00	BEAM GUARDRAIL TYPE 1	L.F.	527	527	0
811.13	BEAM GUARDRAIL FLARED TERMINAL	EACH	2	2	0
811.16	BEAM GUARDRAIL SRT 350 TERMINAL	EACH	2	2	0
811.17	BEAM GUARDRAIL NON-FLARED TERMINAL	EACH	1	0	1
811.19	BEAM GUARDRAIL BARRIER TRANSITION	EACH	1	1	0
811.20	REMOVING BEAM GUARDRAIL	L.F.	939	0	939
811.22	REMOVING BEAM GUARDRAIL ANCHOR	EACH	8	0	8
812.13	CHAIN LINK FENCE - TYPE 6	L.F.	570	0	570
812.39	COATED CHAIN LINK FENCE - TYPE 1	L.F.	3655	1935	1720
812.42	DOUBLE 14 FT. COATED CHAIN LINK GATE	EACH	2	0	2
812.43	DOUBLE 20 FT. COATED CHAIN LINK GATE	EACH	4	4	0
812.52	WOOD FENCE RELOCATION	L.F.	30	0	30
812.53	FENCE REMOVAL	L.F.	2722	1999	723
813.00	MONUMENT CASE AND COVER	EACH	41	21	20
814.01	CEMENT CONCRETE SIDEWALK	S.Y.	10325	5460	4865
815.11	LIGHT LOOSE RIPRAP	C.Y.	84	45	39
815.30	HAND PLACED RIP RAP	C.Y.	25	25	0
815.31	QUARRY SPALLS	C.Y.	334	249	85
818.00	MAILBOX SUPPORT, TYPE 1	EACH	10	3	7
818.20	MAILBOX SUPPORT, TYPE 2	EACH	10	3	7
818.30	NBU MAILBOX, 8 UNIT TYPE 1	EACH	2	0	2
820.30	TRAFFIC SIGNAL SYSTEM (NE 117th St/Hazel Dell)	L.S.	L.S.	L.S.	0

GENERAL LEGEND

- ROW LINE
- NEW EDGE OF PAVEMENT
- NEW CURB LINE
- NEW CONSTRUCTION CENTER LINE
- NEW ROW/SURVEY CENTER LINE
- — X — X — X — NEW FENCE LINE
- NEW STORM DRAIN OR CULVERT
- · F · · · F · · · F · · · NEW FILL LIMITS
- —C—C—C— NEW CUT LIMITS
- PERMANENT SLOPE EASEMENT
- —SF—SF—SF— NEW SILT FENCE
- EXISTING EDGE OF PAVEMENT
- EXISTING CURB LINE
- EXISTING CENTER LINE
- — X — X — X — EXISTING FENCE LINE
- —— T —— T —— EXISTING TELEPHONE LINE
- —— W —— W —— EXISTING WATER LINE
- —— E —— E —— EXISTING UNDERGROUND ELECTRIC
- —— S —— S —— EXISTING SANITARY SEWER LINE
- —— STM —— STM —— EXISTING STORM DRAINAGE
- —— G —— G —— EXISTING GAS LINE
- EXISTING CULVERT
- EXISTING DITCH CENTER LINE
- EXISTING GUARDRAIL

GENERAL SYMBOLS

- NEW CATCH BASIN (CB)
- NEW MANHOLE (MH)
- NEW CURB INLET (CI)
- NEW COMBINATION CURB INLET (CCI)
- NEW MAIL BOX
- NEW HANDICAP RAMP
- CURVE TABLE
- EXISTING TRANSFORMER
- EXISTING ELEC TOWER
- EXISTING SANITARY SEWER MH
- EXISTING FIRE HYDRANT
- EXISTING CLEAN OUT
- EXISTING GAS VALVE
- EXISTING WATER METER
- EXISTING WATER VALVE
- EXISTING SIGNAL POLE
- EXISTING TELEPHONE VAULT
- EXISTING TELEVISION BOX
- EXISTING WELL
- EXISTING BRUSH LINE
- EXISTING HEDGE
- EXISTING CURB INLET (CI)
- EXISTING CATCH BASIN (CB)
- EXISTING STORM MH
- EXISTING MISC MH
- EXISTING SHRUB
- EXISTING CONIFEROUS TREE
- EXISTING DECIDUOUS TREE
- EXISTING SIGN
- EXISTING DECIDUOUS TREE
- EXISTING J BOX
- EXISTING TELEPHONE MANHOLE
- EXISTING TELEPHONE POLE
- EXISTING LIGHT
- EXISTING GUY ANCHOR
- EXISTING POWER POLE
- EXISTING MAIL BOX
- EXISTING TELEPHONE PEDESTAL
- EXISTING SPRINKLER HEAD
- TRAVERSE POINT
- TEST HOLE

CLARK COUNTY WASHINGTON

proud past, promising future

DESIGN & ENGINEERING DIVISION
DESIGN SECTION

NW 119TH / 117TH STREET
SUMMARY OF QUANTITIES AND LEGEND

MICHAEL M. EMRICK — STATE OF WASHINGTON — 29030 REGISTERED PROFESSIONAL ENGINEER — EXPIRES: MAY 26, 2005

CALL 48 HOURS BEFORE YOU DIG
1-800-553-4344
"It's the Law"
NORTHWEST UTILITIES NOTIFICATION CENTER

DESIGNED	MME
DRAWN	BAK
CRP	381022
HOR.	NA
VERT.	NA
DATE	10/20/01
DWG:	SQ01
SHEET	OF

SUMMARY OF QUANTITIES - CPU WATERLINE WEST

BID ITEM		DESCRIPTION	UNIT	QUANTITY
1A		MOBILIZATION	LS	LS
2A		MINOR CHANGES	CALC	CALC
3A		TRAFFIC CONTROL LABOR	HR	24
4A		TEMPORARY TRAFFIC CONTROL DEVICES	LS	LS
5	1	CONNECT TO EXTG 12" PVC (W) w/12" PVC C-900 PC-150 (W) 12" STAINLESS STEEL TAPPING SLEEVE w/TB 12" FLGxMJ TAPPING GATE VALVE w/VALVE BOX & Mega Lug Restraints	EA	1
6		4" PVC C-900, PC-150 PIPE Type "C-1" Asphalt Surface Restoration	LF	20
7		6" PVC C-900, PC-150 PIPE Type "C-1" Asphalt Surface Restoration	LF	185
8		6" PVC C-900, PC-150 PIPE Type "R" Surface Restoration	LF	60
9		8" PVC C-900, PC-150 PIPE Type "R" Surface Restoration	LF	110
10		12" PVC C-900, PC-150 PIPE Type "R" Surface Restoration	LF	2540
11		12" PVC C-900, PC-150 PIPE Type "C-1" Asphalt Surface Restoration	LF	860
12	2	12"x8" FLG TEE w/TB 12" FLGxMJ BF VALVE w/VALVE BOX & Mega Lug Restraints 8" FLGxMJ GATE VALVE w/VALVE BOX & Mega Lug Restraints 12" FLGxMJ ADAPTER w/Mega Lug Restraints	EA	3
13	3	8" MJ x 6" SIDE FLG TEE w/TB 6" FLGxMJ GATE VALVE w/VALVE BOX & Mega Lug Restraints STANDARD FIRE HYDRANT ASSEMBLY LOCATE HYDRANT AS DIRECTED BY CLARK PUBLIC UTILITIES	EA	3
14	4	CAP & BLOCK 8" PVC C-900, PC-150(W)	EA	3
15	5	12" MJ 22½° BEND w/TB & Mega Lug Restraints	EA	2
16	6	12" FLG CROSS 12" FLGxMJ BF VALVE w/VALVE BOX & Mega Lug Restraint 12" x 6" FLGxMJ REDUCER w/Mega Lug Restraint 12" FLGxMJ ADAPTER w/Mega Lug Restraints 6" FLGxMJ GATE VALVE w/VALVE BOX & Mega Lug Restraint 12"x6" FLG REDUCER	EA	1
17	7	AFTER SATISFACTORY TESTING & ACCEPTANCE OF NEW MAIN, CONNECT TO EXTG 6" PVC(W)/6" PVC C-900 PC-150 (W) 6" MJ SLEEVE (PVC C-900 PC-150 TO PVC) CUT & CAP EXTG 6" PVC(W)	EA	2
18	8	12" MJ 45° BEND w/TB & Mega Lug Restraints	EA	3
19	9	12" x 6" FLG TEE w/TB 12" FLGxMJ BF VALVE w/VALVE BOX & Mega Lug Restraint 6" FLGxMJ GATE VALVE w/VALVE BOX & Mega Lug Restraint 12" FLGxMJ ADAPTER w/Mega Lug Restraints	EA	1
20	10	6" x 4" FLG TEE w/TB 6" FLGxMJ GATE VALVE w/VALVE BOX & Mega Lug Restraint 4" FLGxMJ GATE VALVE w/VALVE BOX & Mega Lug Restraint 6" FLGxMJ ADAPTER w/Mega Lug Restraints	EA	1
21	11	STD BLOWOFF ASSEMBLY w/PRECAST TB	EA	4
22	12	4" MJ 90° BEND w/TB & Mega Lug Restraints	EA	1
23	13	AFTER SATISFACTORY TESTING & ACCEPTANCE OF NEW MAIN, CONNECT TO EXTG 4" STL(W)/4" PVC C-900 PC-150 (W) 4" TRANSITION COUPLING (PVC C-900 PC-150 TO STEEL) CUT & CAP EXTG 4" STL(W)	EA	1
24	14	12" FLG TEE w/TB (3)12" FLGxMJ BF VALVE w/VALVE BOX & Mega Lug Restraint	EA	1
25	15	12" MJ 90° BEND w/TB & Mega Lug Restraints	EA	3
26	16	AFTER SATISFACTORY TESTING & ACCEPTANCE OF NEW MAIN, CONNECT TO EXTG 12" PVC CL-200(W)/12" PVC C-900 PC-150 (W) 12" MJ SLEEVE (PVC C-900 PC-150 TO PVC CL-200) CUT & CAP EXTG 12" PVC CL-200(W)	EA	2
27	17	STANDARD WATER SERVICE - NEAR SIDE	EA	5
28	18	STANDARD WATER SERVICE - FAR SIDE TRANSFER EXTG WATER SERVICE LINE TO NEW TAP AFTER TESTING & ACCEPTANCE OF NEW MAIN. EACH METER TO HAVE INDIVIDUAL SERVICE PER CLARK PUBLIC UTILITIES STD DETAILS, SHEET 5. EXTG WATER SERVICES OTHER THAN P.E. CL-200 SHALL BE REPLACED AND NEW SERVICES SHALL BE EXTENDED TO THE METER. FOR FAR SIDE SERVICES, THE CONTRACTOR SHALL BORE OR PUSH THE SERVICE UNDER THE ROADWAY.	EA	2
29	19	12" FLGxMJ TEE W/TB & Mega Lug Restraints 12"FLGxMJ BF VALVE W/VALVE BOX & Mega Lug Restraints 12" FLGxMJ ADAPTER W/Mega Lug Restraints	EA	1
30	20	6" MJ 45° BENDS W/TB & Mega Lug Restraints	EA	4
31	21	AFTER SATISFACTORY TESTING & ACCEPTANCE OF NEW MAIN, REMOVE BLOW-OFF ASSEMBLIES AND CONNECT TO 12" PVC C-900, PC-150(W) 74 LF 12" PVC C-900, PC-150(W) 12" 11 1/4° MJ BEND W/TB & MEGA LUG RESTRAINTS (2) 12" MJ SLEEVE (PVC C-900 TO PVC-C900) W/MEGA LUG RESTRAINTS EMERGENCY CONNECTION	EA	1

SUMMARY OF QUANTITIES - CPU WATERLINE EAST

Item	Description	Unit	Quan.
1	Mobilization	L.S.	L.S.
2	Traffic Control	L.S.	L.S.
3	12" D.I. Main w/ Type R Restoration	L.F.	3,260
4	Std. Perpendicular Blow-off Assembly, Assembly No. 1	EA.	2
5	Pipe, Valves and Fittings, Assembly No. 2	EA.	1
6	Cut, Connect and Fittings, Assembly No. 3A	EA.	2
7	Cut, Connect and Fittings, Assembly No. 3B	EA.	1
8	Cut, Connect and Fittings, Assembly No. 3C	EA.	1
9	Cut, Connect and Fittings, Assembly No. 3D	EA.	2
10	Near-side Water Service, Assembly No. 4N	EA.	2
11	Far-side Water Service, Assembly No. 4F	EA.	6
12	Near-side Water Service, Assembly No. 5N-R	EA.	6
13	Far-side Water Service, Assembly No. 5F	EA.	4
14	Far-side Water Service, Assembly No. 5F-R	EA.	5
15	Std. Fire Hydrant Assembly (removal / return), Assembly No. 6	EA.	3
16	Pipe, Valves and Fittings, Assembly No. 7	EA.	1
17	Fittings, Assembly No. 8	EA.	5
18	Pipe, Valve and Fittings, Assembly No. 9	EA.	1
19	Pipe, Valves and Fittings, Assembly No. 10	EA.	1
20	Pipe, Valve and Fittings, Assembly No. 11	EA.	1
21	Pipe, Valve and Fittings, Assembly No. 12	EA.	1
22	Pipe, Valve and Fittings, Assembly No. 13	EA.	1
23	Connect and Fittings, Assembly No. 14	EA.	1
24	Cut and Fittings, Assembly No. 15	EA.	2
25	Near-side Water Service, Assembly No. 16N-R	EA.	1

SUMMARY OF QUANTITIES
CLARK COUNTY - SANITARY SEWER

SEGMENT 1

ItemNum	BID ITEM	UNIT	QUANTITY
	MOBILIZATION	L.S.	L.S.
	ASPHALT CONCRETE PAVEMENT		
504.11	SAWCUT EXISTING ASPHALT PAVEMENT	L.F.	119
	DRAINAGE STRUCTURES, STORM SEWER, UTILITIES		
705.XX	RELOCATION OF EXISTING SANITARY SEWER MANHOLE	EACH	1
708.00	TRENCH SAFETY SYSTEM	L.F.	6089
708.03	PLUGGING EXISTING PIPE	EACH	1
717.17	SANITARY SEWER FORCE MAIN, DUAL 36-INCH DIAM.	L.F.	4233
717.18	SANITARY SEWER FORCE MAIN, SINGLE 36-INCH DIAM.	L.F.	1851
717.36	EXTEND SANITARY SEWER LATERALS	EACH	2
717.40	TESTING SEWER PIPE (FORCE MAIN)	L.F.	10317
717.65	AIR/VACUUM VAULT	EACH	1
717.XX	REMOVAL AND REPLACEMENT OF UNSUITABLE MATERIAL	C.Y.	100
717A.00	LOCATOR STATION	EACH	22
717B.00	SANITARY SEWER BYPASS SYSTEM	L.S.	L.S.
	EROSION CONTROL AND PLANTING		
801.51	SILT FENCE	L.F.	115
802.08	LANDSCAPE RESTORATION	L.S.	L.S.
802.89	SEEDING AND MULCHING	ACRE	2

SEGMENT 2

ItemNum	BID ITEM	UNIT	QUANTITY
	MOBILIZATION	L.S.	L.S.
	ASPHALT CONCRETE PAVEMENT		
504.11	SAWCUT EXISTING ASPHALT PAVEMENT	L.F.	526
	DRAINAGE STRUCTURES, STORM SEWER, UTILITIES		
705.11	MANHOLE 72 IN. DIAM. TYPE 2	EACH	5
705.11	MANHOLE 72 IN. DIAM. TYPE 2 W/ 36-INCH OPENING	EACH	1
705.17	MANHOLE 72 IN. DIAM. TYPE 3	EACH	1
705.XX	FURNISH AND INSTALL MANHOLE SEALANT WRAPS	EACH	3
708.00	TRENCH SAFETY SYSTEM	L.F.	2093
717.07	SANITARY SEWER PIPE 48-INCH DIAM	L.F.	2093
717.19	SANITARY SEWER PIPE 24-INCH DIAM	L.F.	18
717.40	TESTING SEWER PIPE (GRAVITY MAIN)	L.F.	2093
717.50	CONNECT TO EXISTING SANITARY SEWER MANHOLE	EACH	1
717.XX	REMOVAL AND REPLACEMENT OF UNSUITABLE MATERIAL	C.Y.	100
717A.00	LOCATOR STATION	EACH	2
717C.00	CONNECT TO EXISTING SANITARY SEWER	EACH	1
	EROSION CONTROL AND PLANTING		
802.08	LANDSCAPE RESTORATION	L.S.	L.S.
802.89	SEEDING AND MULCHING	ACRE	1

DESIGNED MME
DRAWN BAK
CRP 381022
HOR. NA
VERT. NA
DATE 10/20/01
DWG: SQ02
SHEET OF

CALL 48 HOURS BEFORE YOU DIG 1-800-553-4344 "It's the Law" NORTHWEST UTILITIES NOTIFICATION CENTER

RICHARD M. EDRICK STATE OF WASHINGTON 29030 REGISTERED PROFESSIONAL ENGINEER
EXPIRES MAY 26, 2005

DESIGN & ENGINEERING DIVISION
DESIGN SECTION

NW 119TH / 117TH STREET
SUMMARY OF QUANTITIES

proud past, promising future
CLARK COUNTY WASHINGTON

N:\CIPPROJECTS\381022-NW117-119\DESIGN\DWGS\119SQ01-2.dwg, 10/13/2004 1:58:01 PM, klugb

CAPITAL IMPROVEMENTS PROGRAM
COUNTY ROAD PROJECT # 381022

NW 119TH/NE 117TH STREET

FROM NW 7TH AVENUE TO NE HAZEL DELL AVENUE

PLANS FOR THE CONSTRUCTION OF
ROADWAY, RETAINING WALLS, STORM DRAINAGE, AND SIGNALIZATION

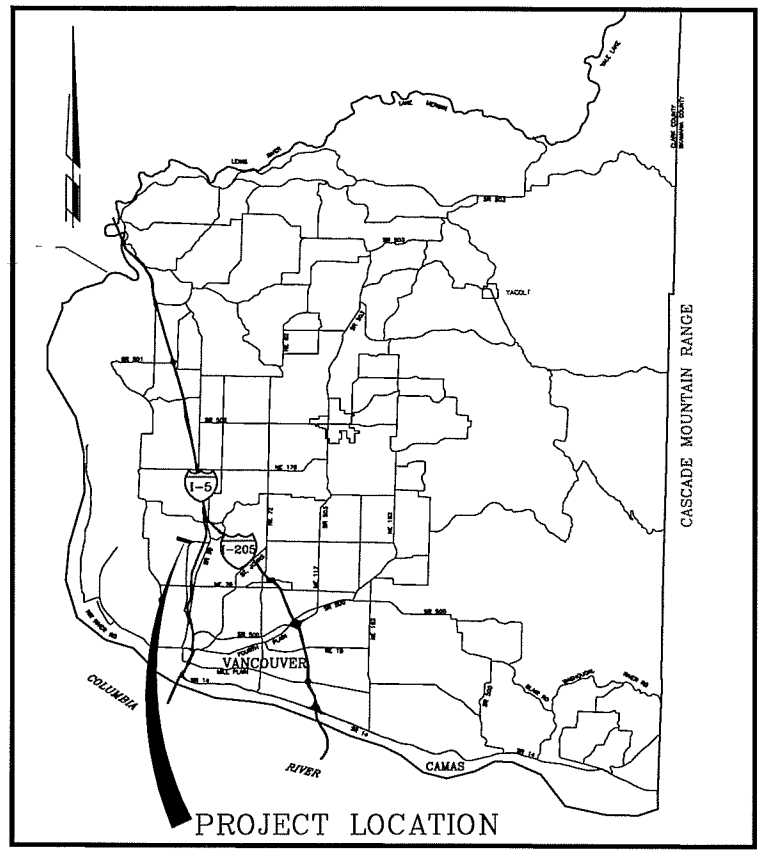

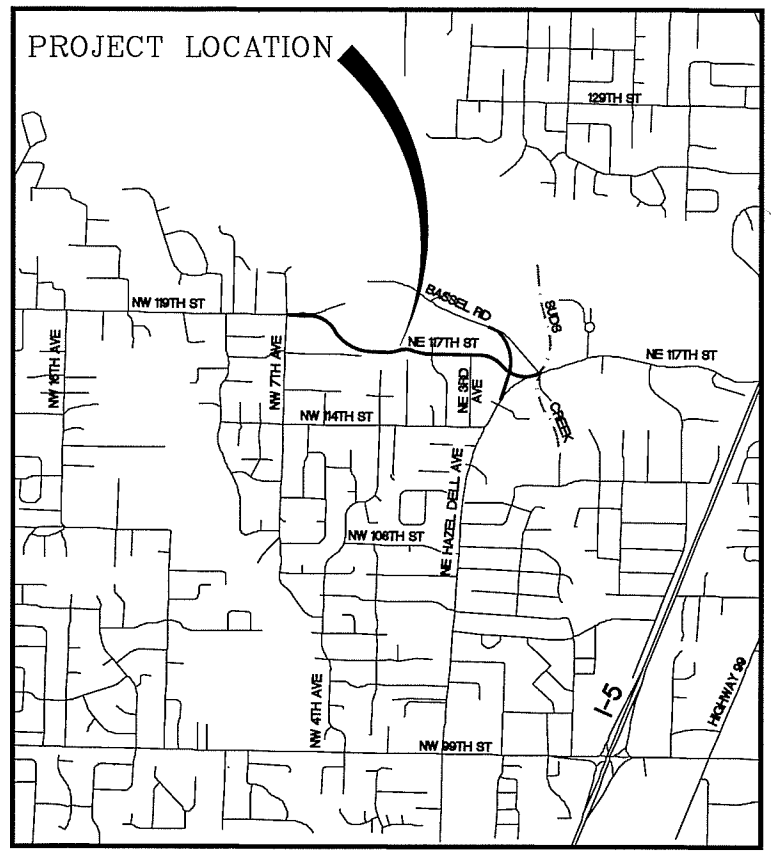

INDEX OF SHEETS

1	CV1	COVER SHEET
2	LAY	SHEET LAYOUT
3	TS1	TYPICAL SECTIONS
4	TS2	TYPICAL SECTIONS
5	TS3	SPECIAL EMBANKMENT REQUIREMENTS
6	H01	HORIZONTAL CONTROL
7	EC1	EROSION CONTROL PLAN
8	EC2	EROSION CONTROL PLAN
9	EC3	EROSION CONTROL DETAILS
10	EC4	EROSION CONTROL NOTES
11	SP1	SITE PREPARATION PLAN
12	SWF1	STORMWATER FACILITY #1
13	SWF1A	STORMWATER FACILITY #1 STAKING PLAN
14	SWF3	STORMWATER FACILITY #3
15	SWF3A	STORMWATER FACILITY #3 STAKING PLAN
16	SFW3B	STORMWATER FACILITY #3 PROFILE
17	SWF4	STORMWATER FACILITY #4
18	SWF4A	STORMWATER FACILITY #4A STAKING PLAN
19	SWF5	STORMLINE 'C' & 'K'
20	SWF6	DETAILS
21	SWF6A	DETAILS
22	SWF7	SUDS CREEK ENHANCEMENTS
23	SWF7A	SUDS CREEK ENHANCEMENTS
24	SWF7B	SUDS CREEK ENHANCEMENT PROFILE
25	SWF8	STORM FACILITY #1 & #4 SECTIONS
26	SWF8A	STORM FACILITY SECTIONS #3
27	SWF9	SUDS CREEK CROSSING PLAN & PROFILE
28	RD1	ROADWAY DETAILS I
29	RD2	ROADWAY DETAILS II
30	DD1	DRAINAGE DETAILS
31	DD2	DRAINAGE DETAILS
32	DD3	DRAINAGE DETAILS
33	B01	BERMS
34	W01	NE 3RD AVENUE RETAINING WALL
35	W02	NE 3RD AVENUE RETAINING WALL DETAILS
36	W03	BASSEL DRIVE RETAINING WALL
37	W04	BASSEL DRIVE RETAINING WALL DETAILS
38	PP1	PLAN & PROFILE NW 119TH/117TH (BOP TO 10+00)
39	PP2	PLAN & PROFILE NW 119TH/117TH (STA 10+00 TO 15+00)
40	PP3	PLAN & PROFILE NW 119TH/117TH (STA 15+00 TO 20+00)
41	PP4	PLAN & PROFILE NW 119TH/117TH (STA 20+00 TO 25+00)
42	PP5	PLAN & PROFILE NW 119TH/117TH (STA 25+00 TO 30+00)
43	PP6	PLAN & PROFILE NW 119TH/117TH (STA 30+00 TO 35+00)
44	PP7	PLAN & PROFILE NW 119TH/117TH (STA 35+00 TO 40+00)
45	PP8	PLAN & PROFILE NW 119TH/117TH (STA 40+00 TO EOP)
46	PP9	PLAN & PROFILE NE HAZEL DELL (BOP TO 8+15.76)
47	PP10	PLAN & PROFILE BASSEL ROAD (STA 8+15.76 TO 13+00)
48	PP11	PLAN & PROFILE BASSEL ROAD (STA 13+00 TO EOP)
49	PP12	PLAN & PROFILE HAZEL DELL MERGE LANE (STA 5+62.87 TO 9+31.63)
50	PP13	PLAN & PROFILE NW 7TH AVE (STA 0+00 TO 1+86.69)
51	PP14	PLAN & PROFILE NE 2ND COURT & NE 3RD AVE
52	DRV1	DRIVEWAY PLAN & PROFILE
53	DRV2	DRIVEWAY PLAN & PROFILE
54	DRV3	DRIVEWAY PLAN & PROFILE
55	DP1	DRAINAGE PLAN (BOP TO STA 10+00)
56	DP2	DRAINAGE PLAN (STA 10+00 TO 15+00)
57	DP3	DRAINAGE PLAN (STA 15+00 TO 20+00)
58	DP4	DRAINAGE PLAN (STA 20+00 TO 25+00)
59	DP5	DRAINAGE PLAN (STA 25+00 TO 30+00)
60	DP6	DRAINAGE PLAN (STA 30+00 TO 35+00)
61	DP7	DRAINAGE PLAN (STA 35+00 TO 40+00)
62	DP8	DRAINAGE PLAN (STA 40+00 TO 45+00)
63	DP9	DRAINAGE PLAN (STA 45+00 TO EOP)
	DP10	SHEET DELETED
64	DP11	DRAINAGE PLAN (HAZEL DELL STA BOP TO 8+15.76)
65	DP12	DRAINAGE PLAN (BASSEL ROAD STA 8+15.76 TO 13+00)
66	DP13	DRAINAGE PLAN (BASSEL ROAD STA 13+00 TO EOP)
67	IO1	INTERSECTION PLAN
68	STR1	SIGNING & STRIPING PLAN
69	STR2	SIGNING & STRIPING PLAN
70	STR3	SIGNING & STRIPING PLAN
71	S01	NE 117TH ST AT HAZEL DELL AVE–SIGNAL PLAN
72	S02	NE 117TH ST AT HAZEL DELL AVE–DETECTION LOGIC SCHEMATIC–E/W
73	S03	NE 117TH ST AT HAZEL DELL AVE–DETECTION LOGIC SCHEMATIC–N/S
74	S04	NE 117TH ST AT HAZEL DELL AVE–STANDARD POLE DETAIL
75	S05	NE 117TH ST AT HAZEL DELL AVE–SYSTEM DETAILS
76	LP01	LANDSCAPE PLAN
77	LP02	LANDSCAPE PLAN
78	LP03	LANDSCAPE PLAN
79	LP04	LANDSCAPE PLAN
80	LP05	LANDSCAPE PLAN
81	LP06	LANDSCAPE PLAN
82	LP07	LANDSCAPE PLAN
83	LP08	LANDSCAPE DETAILS AND NOTES
84	RW–1	BASSEL ROAD WALL–COVER SHEET
85	RW–2	BASSEL ROAD WALL–PROFILE
86	RW–3	BASSEL ROAD WALL–TYPICAL SECTIONS & DETAILS
87	RW–4	BASSEL ROAD WALL–TRAFFIC BARRIER SECTIONS & DETAILS
88	RW–5	BASSEL ROAD WALL–CONSTRUCTION NOTES
89	RWS–1	SUDS CREEK WALL–COVER SHEET
90	RWS–2	SUDS CREEK WALL–SITE PLAN
91	RWS–3	SUDS CREEK WALL–SOUTH WALL PROFILE
92	RSW–4	SUDS CREEK WALL–NORTH WALL PROFILE
93	RWS–5	SUDS CREEK WALL–-PATH WALL PROFILE
94	RWS–6	SUDS CREEK WALL–TYPICAL SECTIONS & DETAILS
95	RWS–7	SUDS CREEK WALL–CONSTRUCTION NOTES

MICHAEL M. CHRUCK
STATE OF WASHINGTON
29030
REGISTERED
PROFESSIONAL ENGINEER
EXPIRES: MAY 26, 2005

100% REVIEW SET

ENG #XXXXXXXX

COMMISSIONERS:

BETTY SUE MORRIS, Chair
JUDIE STANTON, Commissioner
CRAIG A. PRIDEMORE, Commissioner

CLARK COUNTY
WASHINGTON
proud past, promising future

DEPARTMENT OF
PUBLIC WORKS

Quality Assurance	Project Manager	Public Works Director/ County Engineer
Larry Maddux, PLS — DATE:	Matt Hall — DATE:	Peter Capell, P.E. — DATE:

CLARK COUNTY
WASHINGTON
proud past, promising future

Recommended for Approval

Grading _____ Erosion _____

Storm Water Plan _____

Development Review Manager — Date

DESIGN AND ENGINEERING DIVISION- DESIGN SECTION

N:\CIP\PROJECTS\381022-NW117-119\DESIGN\DWGS\1119COV.dwg, Layout1, 10/12/2004 3:38:15 PM, begleyk

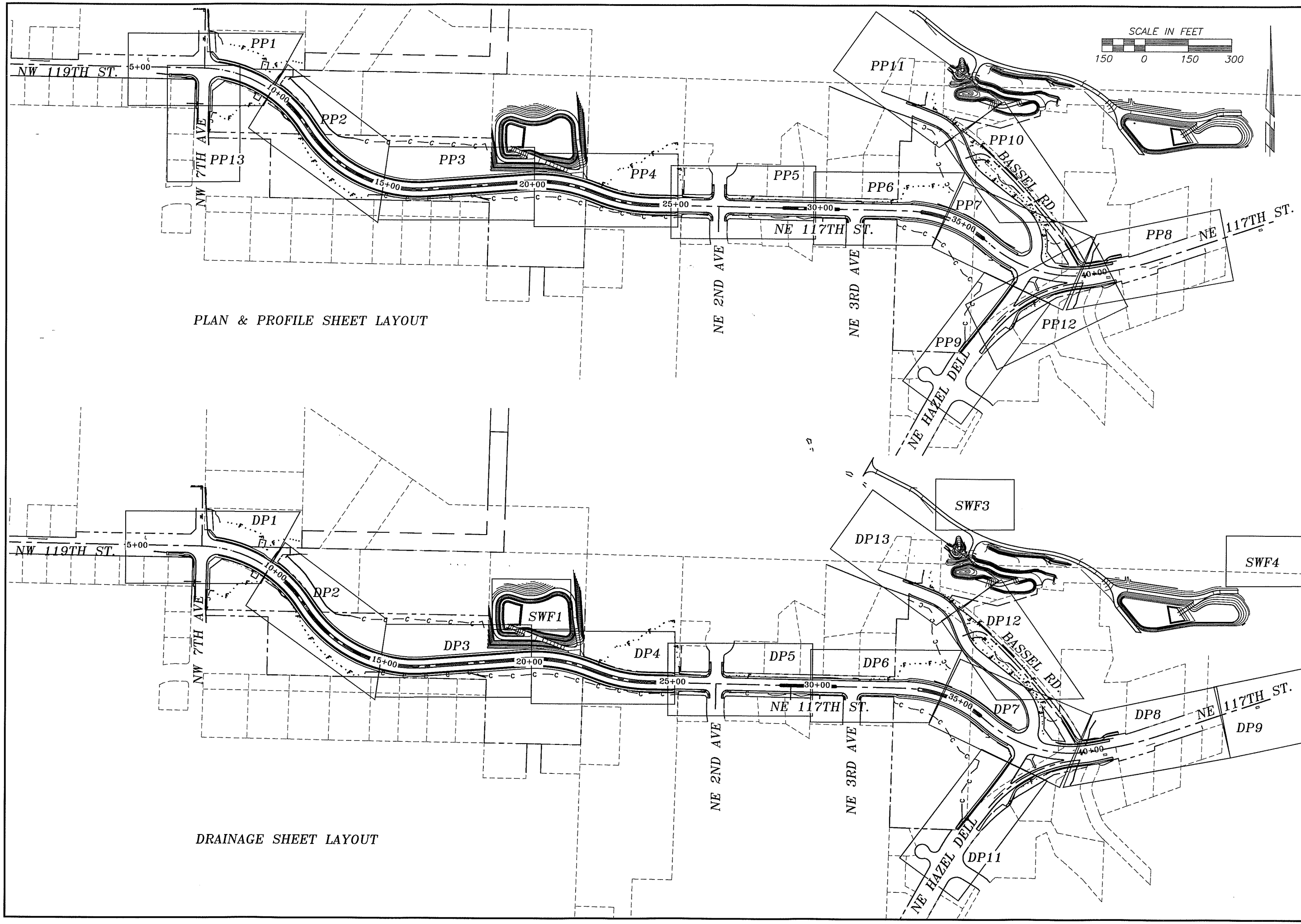

DESIGNED	MME
DRAWN	BAK
CRP	381022
HOR.	1"=150'
VERT.	NA
DATE	10/20/01
DWG:	LAY
SHEET	OF

CALL 48 HOURS BEFORE YOU DIG
1-800-553-4344
"It's the Law"
NORTHWEST UTILITIES NOTIFICATION CENTER

MICHAEL M. EADDICK
STATE OF WASHINGTON
PROFESSIONAL ENGINEER
EXPIRES JANUARY 29, 2005

DESIGN & ENGINEERING DIVISION
DESIGN SECTION

NW 119TH / 117TH STREET
SHEET LAYOUT

proud past, promising future
CLARK COUNTY
WASHINGTON

N:\CIP\PROJECTS\381022-NW117-119\DESIGN\DWGS\119LAY.dwg, Layout1, 10/6/2004 2:41:22 PM, begleyk

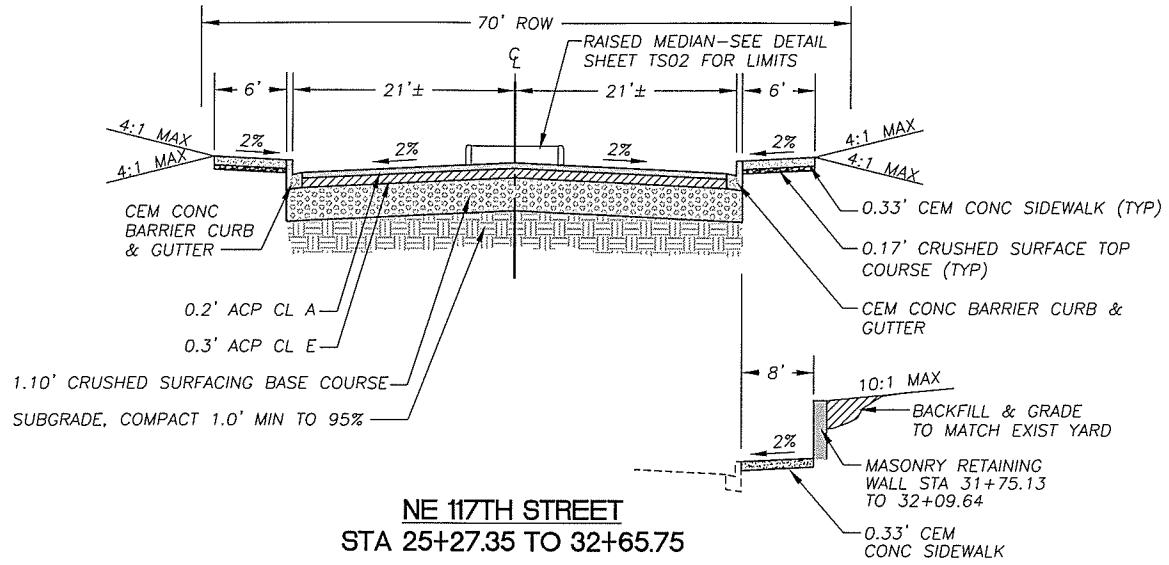

NE 117TH STREET
STA 25+27.35 TO 32+65.75

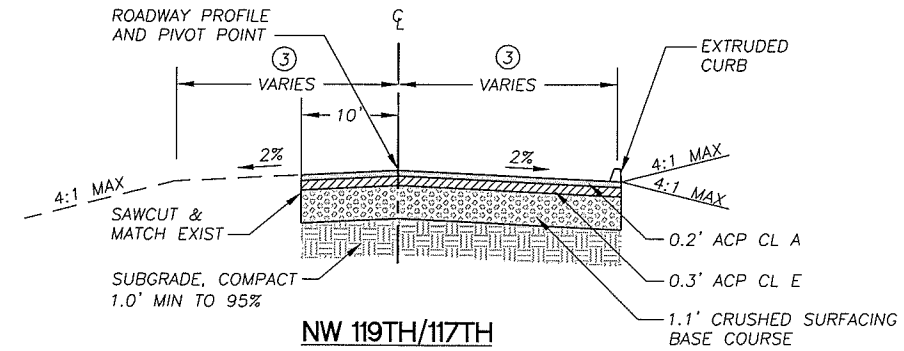

NW 119TH/117TH
B.O.P. TO 6+13.90

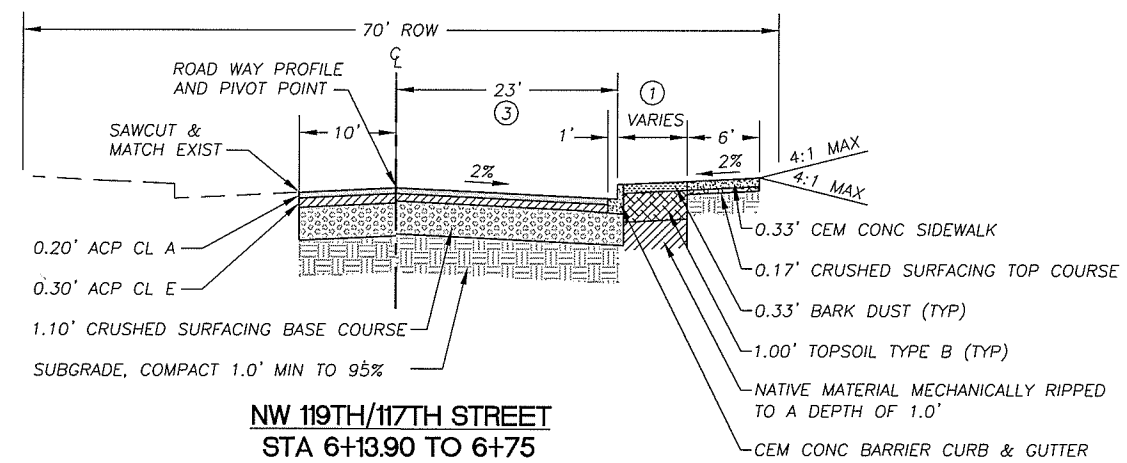

NW 119TH/117TH STREET
STA 6+13.90 TO 6+75

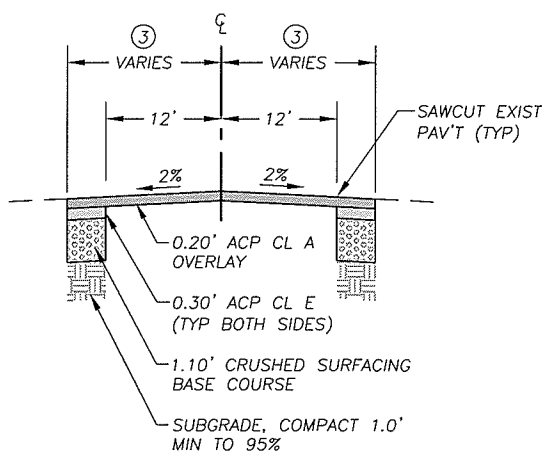

NE 117TH STREET
STA 40+75 TO 44+25

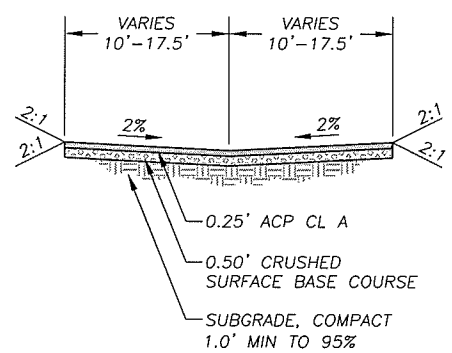

BASSEL DRIVE
STA 0+23.50 TO 4+70.3

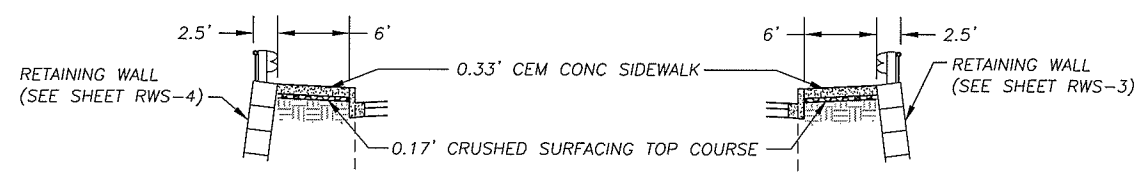

STA 39+40
TO 40+79.5

STA 39+70
TO 39+93.90

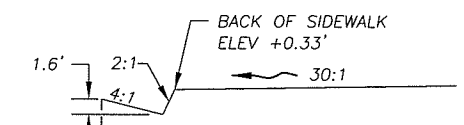

STA 8+00 TO STA 10+75

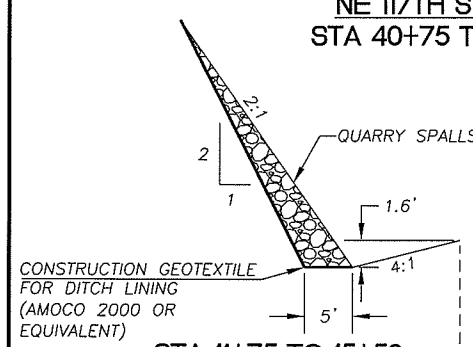

STA 11+75 TO 15+50

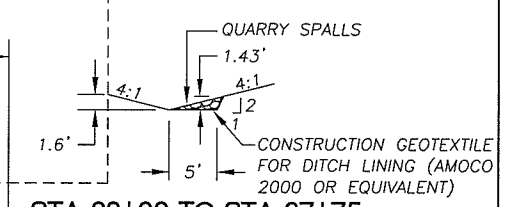

STA 33+00 TO STA 37+75

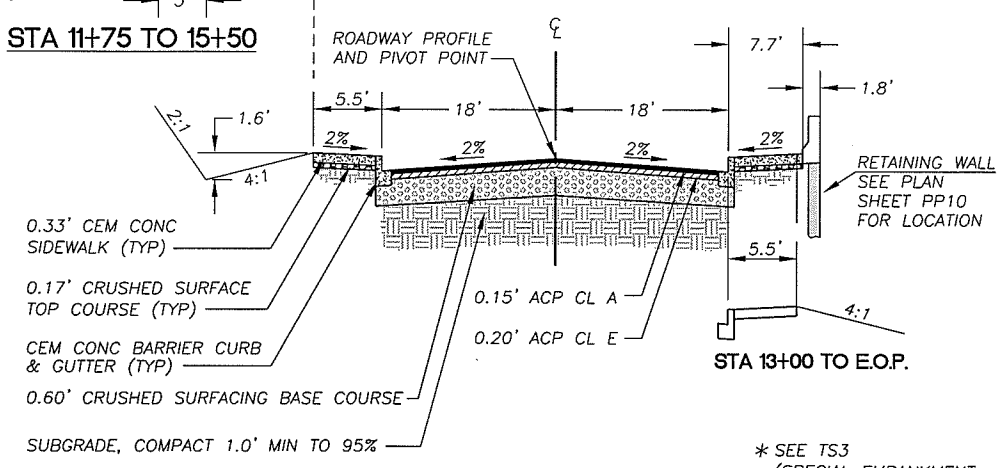

STA 13+00 TO E.O.P.

BASSEL ROAD
STA 8+15.76 TO E.O.P.

* SEE TS3 (SPECIAL EMBANKMENT REQUIREMENTS)

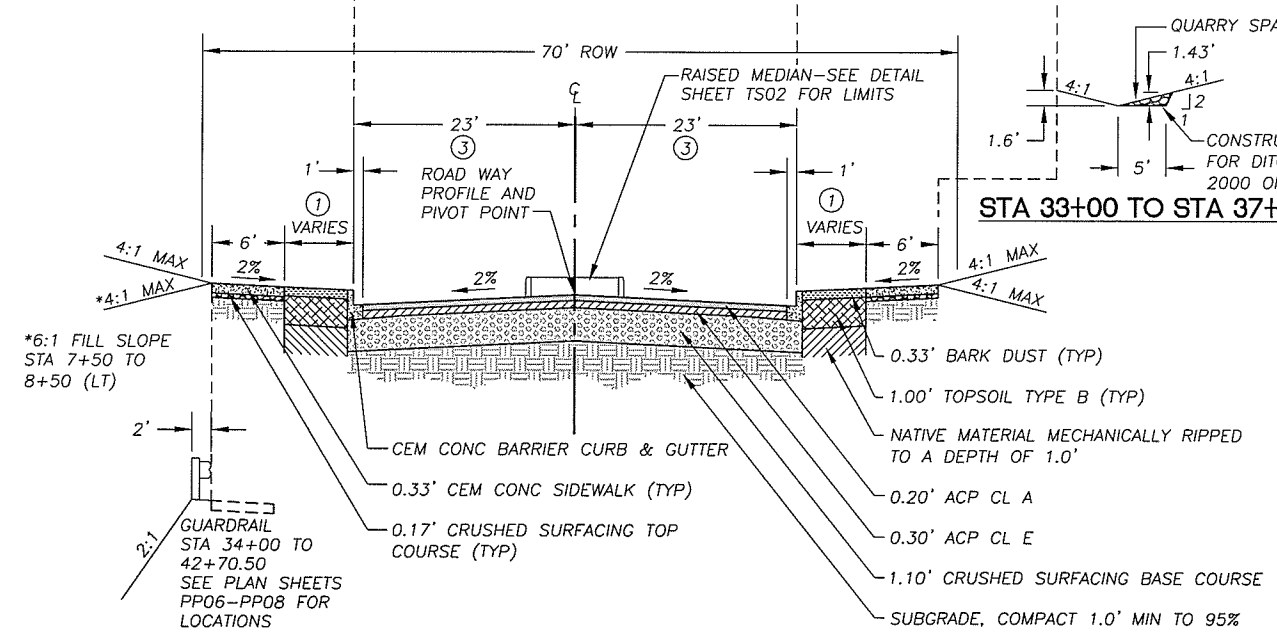

NW 119TH/117TH STREET; NE 117TH STREET
STA 6+75 TO 25+27.35
* STA 32+65.75 TO 40+75
SEE TS3–(SPECIAL EMBANKMENT REQUIREMENTS)

(1) SEE PLAN SHEET FOR WIDTHS
(3) SEE PLAN SHEET FOR TAPER LOCATIONS AND WIDTHS

DESIGNED	MME
DRAWN	BAK
CRP	381022
HOR.	NA
VERT.	NA
DATE	10/20/01
DWG.	TS01
SHEET	OF

CALL 48 HOURS BEFORE YOU DIG 1-800-553-4344 "It's the Law" NORTHWEST UTILITIES NOTIFICATION CENTER

MICHAEL M. EARLICK STATE OF WASHINGTON 20833 REGISTERED PROFESSIONAL ENGINEER
EXPIRES MAY 20, 2005

DESIGN & ENGINEERING DIVISION
DESIGN SECTION

NW 119TH / 117TH STREET
TYPICAL SECTIONS

proud past, promising future
CLARK COUNTY WASHINGTON

N:\CIP\PROJECTS\381022-NW117-119\DESIGN\DWGS\119TS01-2.dwg, Layout1, 10/6/2004 2:45:15 PM, begleyk

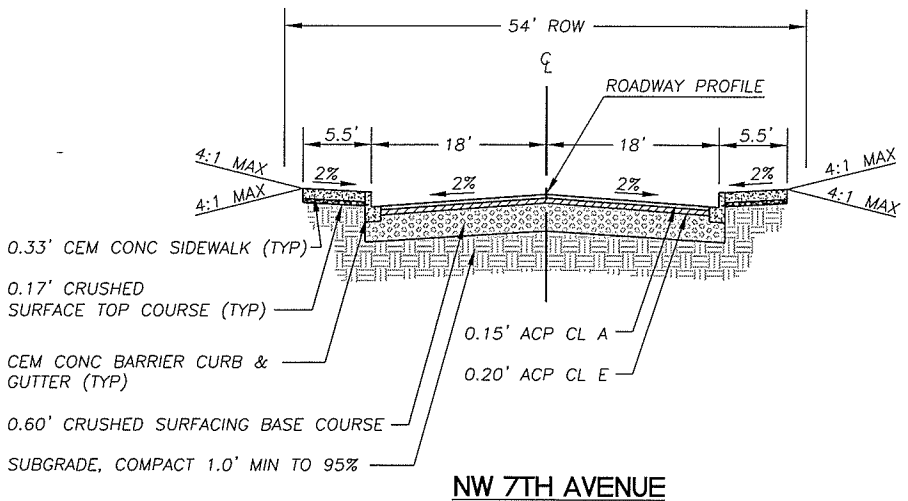

NW 7TH AVENUE
STA 0+00 TO 1+40.25

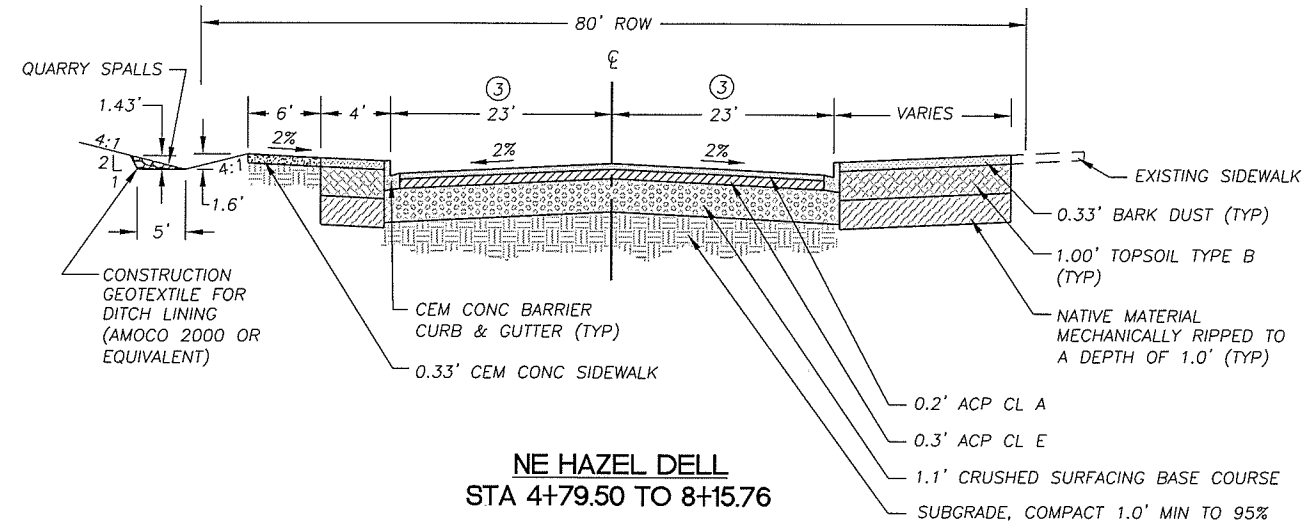

NE HAZEL DELL
STA 4+79.50 TO 8+15.76

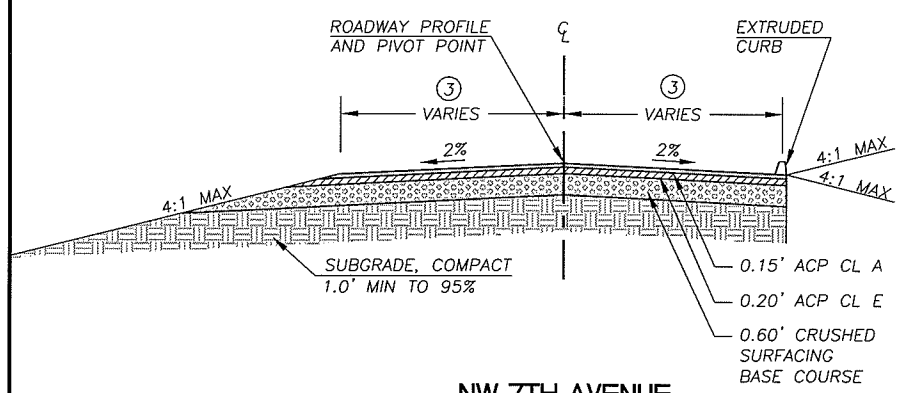

NW 7TH AVENUE
STA 1+40.25 TO 1+89.69

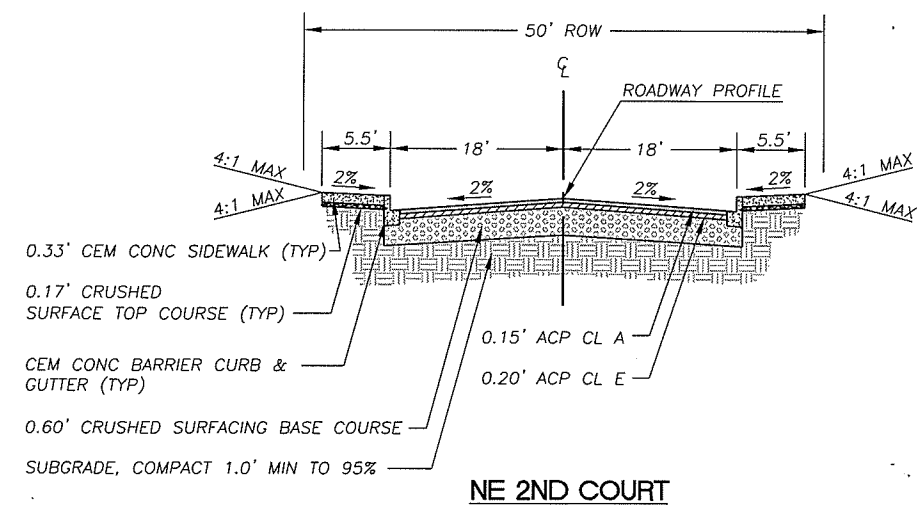

NE 2ND COURT
STA 0+00 TO 0+75

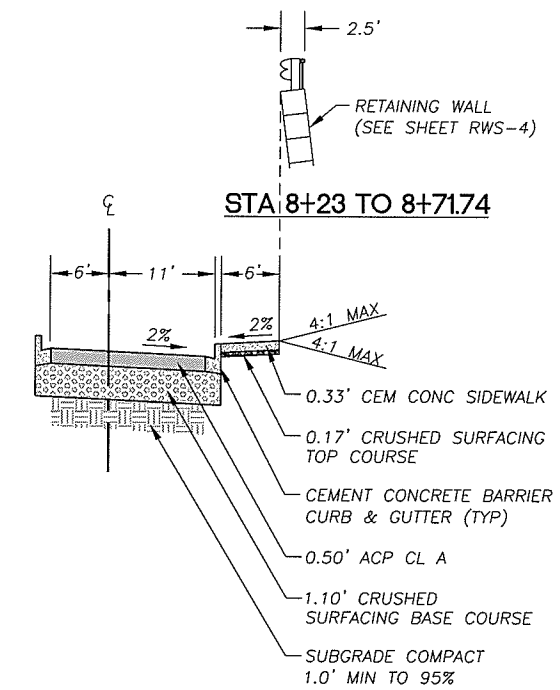

STA 8+23 TO 8+71.74

HAZEL DELL MERGE LANE
STA 6+78.58 TO 8+71.74

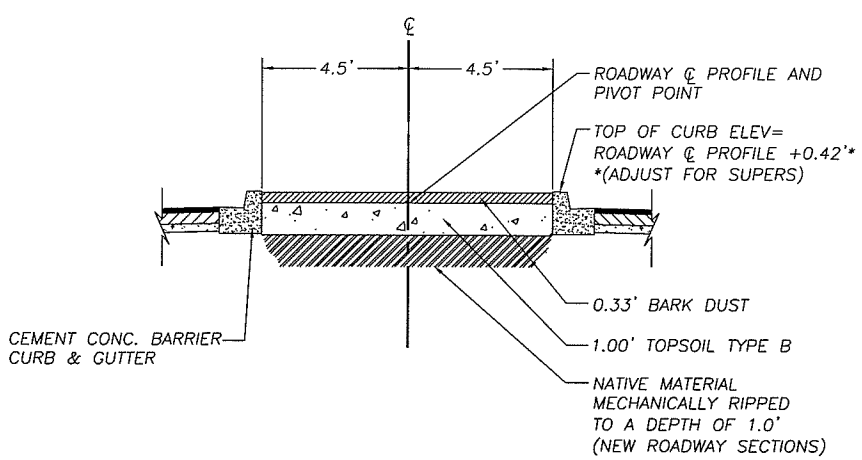

RAISED MEDIAN SECTION
(NEW ROADWAY SECTION)

STA 10+30 TO 24+68
STA 33+58 TO 35+88

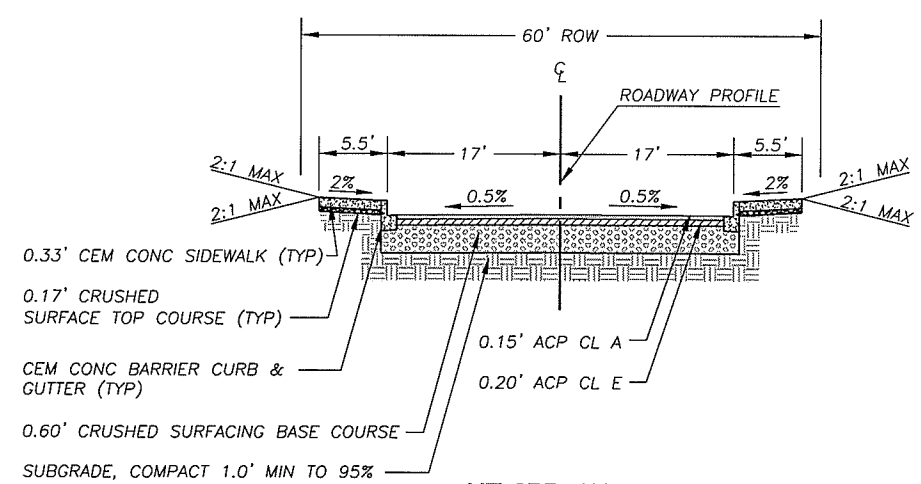

NE 3RD AVE
STA 0+00 TO 0+70

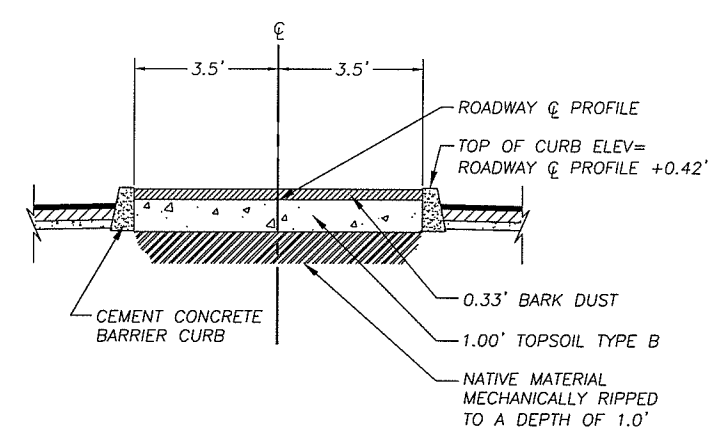

RAISED MEDIAN SECTION
(EXISTING ROADWAY SECTION)

STA 28+80 TO STA 30+78.50

DESIGNED	MME
DRAWN	BAK
CRP	381022
HOR.	NA
VERT.	NA
DATE	10/20/01
DWG:	TS02
SHEET	OF

CALL 48 HOURS BEFORE YOU DIG 1-800-553-4344 "It's the Law" NORTHWEST UTILITIES NOTIFICATION CENTER

JOEL M. EDWARDS STATE OF WASHINGTON 29030 REGISTERED PROFESSIONAL ENGINEER EXPIRES MAY 26, 2005

DESIGN & ENGINEERING DIVISION
DESIGN SECTION

NW 119TH / 117TH STREET
TYPICAL SECTIONS

proud past, promising future
CLARK COUNTY WASHINGTON

N:\CIP\PROJECTS\381022-NW117-119\DESIGN\DWGS\119TS01-2.dwg, Layout1 (2), 10/1/2004 5:11:23 PM, begleyk

N:\CIP\PROJECTS\381022-NW117-119\DESIGN\DWGS\119TS03.dwg, Layout1, 10/13/2004 4:35:05 PM, begleyk

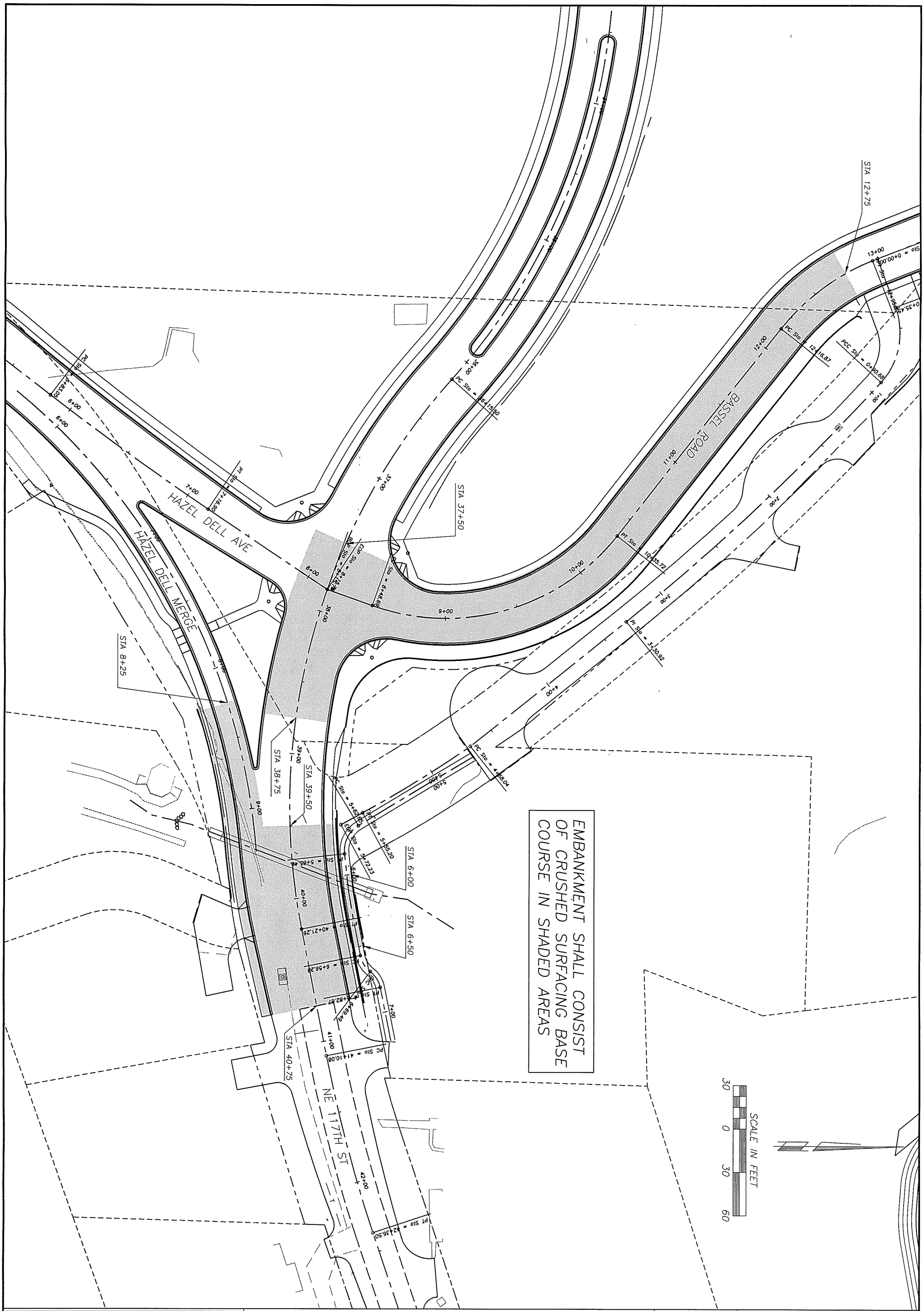

CLARK COUNTY WASHINGTON
proud past, promising future

DESIGN & ENGINEERING DIVISION
DESIGN SECTION

NW 119TH / 117TH STREET
SPECIAL EMBANKMENT REQUIREMENTS

MICHAEL M. EMRICK, STATE OF WASHINGTON, 29030, REGISTERED PROFESSIONAL ENGINEER
EXPIRES: MAY 26, 2005

CALL 48 HOURS BEFORE YOU DIG
1-800-553-4344
"It's the Low"
NORTHWEST UTILITIES NOTIFICATION CENTER

DESIGNED	MME
DRAWN	KB
CRP	381022
HOR.	1"=30'
VERT.	NA
DATE	8/10/04
DWG:	TS03
SHEET	OF

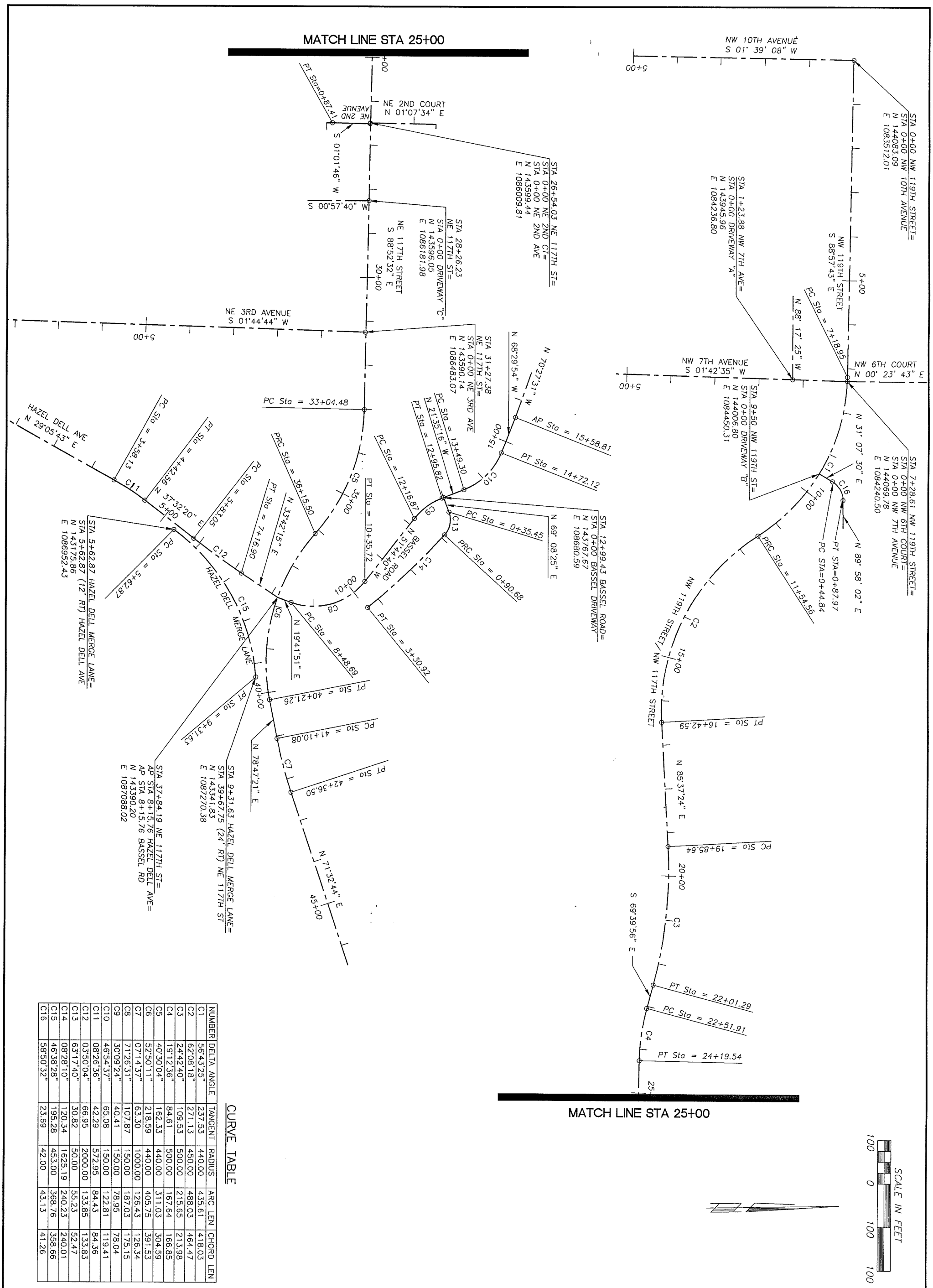

CURVE TABLE

NUMBER	DELTA ANGLE	TANGENT	RADIUS	ARC LEN	CHORD LEN
C1	56°43'25"	237.53	440.00	435.61	418.03
C2	62°08'18"	271.13	450.00	488.03	464.47
C3	24°42'40"	109.53	500.00	215.65	213.98
C4	19°12'36"	84.61	500.00	167.64	166.85
C5	40°30'04"	162.33	440.00	311.03	304.59
C6	52°50'11"	218.59	440.00	405.75	391.53
C7	07°14'37"	63.30	1000.00	126.43	126.34
C8	71°26'31"	107.87	150.00	187.03	175.15
C9	30°09'24"	40.41	150.00	78.95	78.04
C10	46°54'37"	65.08	150.00	122.81	119.41
C11	08°26'36"	42.29	572.95	84.43	84.36
C12	03°50'04"	66.95	2000.00	133.85	133.83
C13	63°17'40"	30.82	50.00	55.23	52.47
C14	08°28'10"	120.34	1625.19	240.23	240.01
C15	46°38'28"	195.28	453.00	368.76	358.66
C16	58°50'32"	23.69	42.00	43.13	41.26

CLARK COUNTY
WASHINGTON
proud past, promising future

DESIGN & ENGINEERING DIVISION
DESIGN SECTION

NW 119TH / 117TH STREET
HORIZONTAL CONTROL

MICHAEL M. EMRICK
STATE OF WASHINGTON
29030
REGISTERED
PROFESSIONAL ENGINEER
EXPIRES: MAY 26, 2005

CALL 48 HOURS BEFORE YOU DIG
1-800-553-4344
"It's the Law"
NORTHWEST UTILITIES NOTIFICATION CENTER

DESIGNED	MME
DRAWN	BAK
CRP	381022
HOR.	1"=100'
VERT.	NA
DATE	10/20/01
DWG:	H01
SHEET	OF

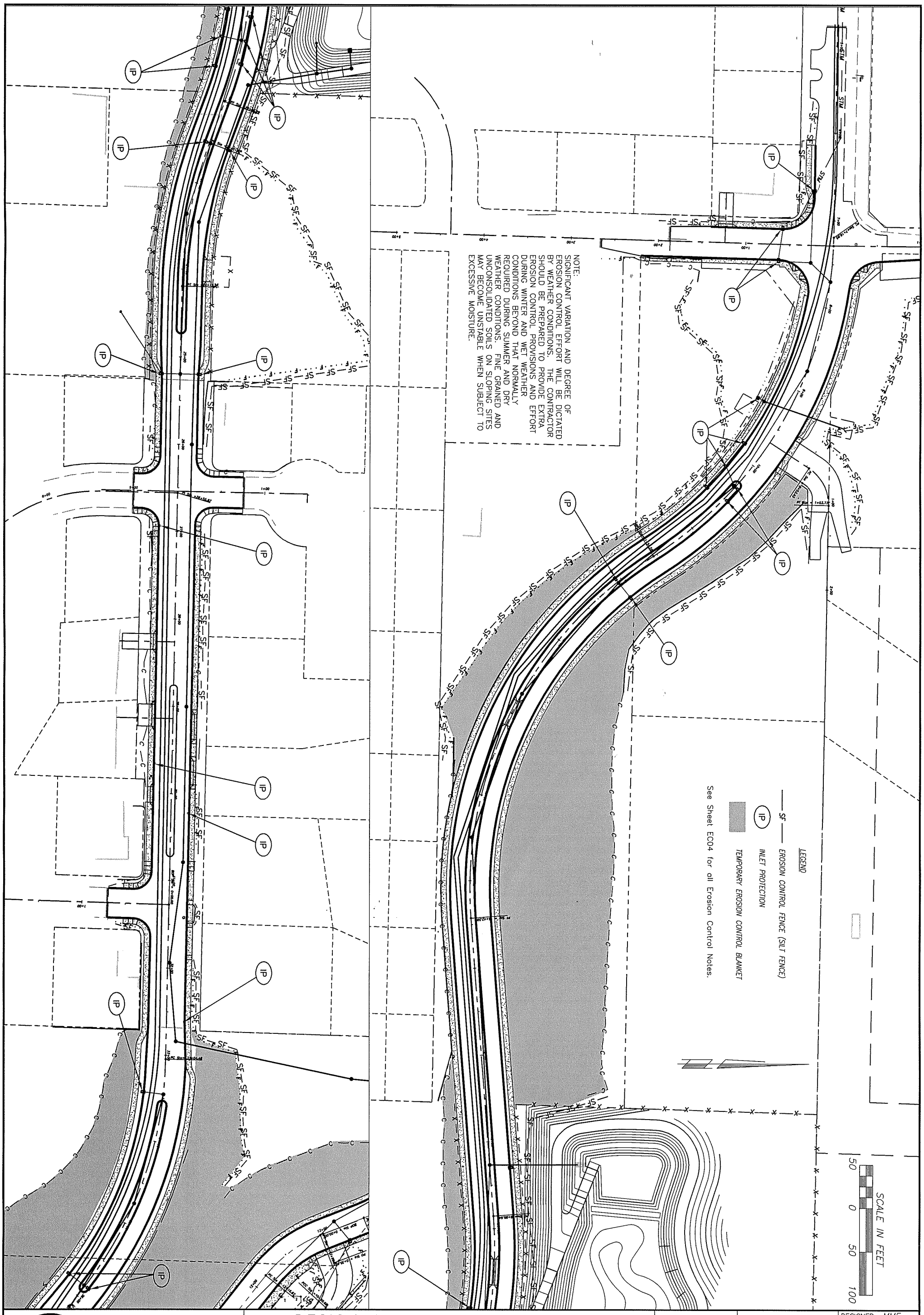

proud past, promising future

CLARK COUNTY
WASHINGTON

DESIGN & ENGINEERING DIVISION
DESIGN SECTION

NW 119TH / 117TH STREET
EROSION CONTROL PLAN

MICHAEL M. EMRICK
STATE OF WASHINGTON
29030
REGISTERED
PROFESSIONAL ENGINEER
EXPIRES: MAY 26, 2005

CALL 48 HOURS BEFORE YOU DIG
1-800-553-4344
"It's the Law"
NORTHWEST UTILITIES NOTIFICATION CENTER

DESIGNED	MME
DRAWN	BAK
CRP	381022
HOR.	1"=50'
VERT.	NA
DATE	10/20/01
DWG:	EC01
SHEET	OF

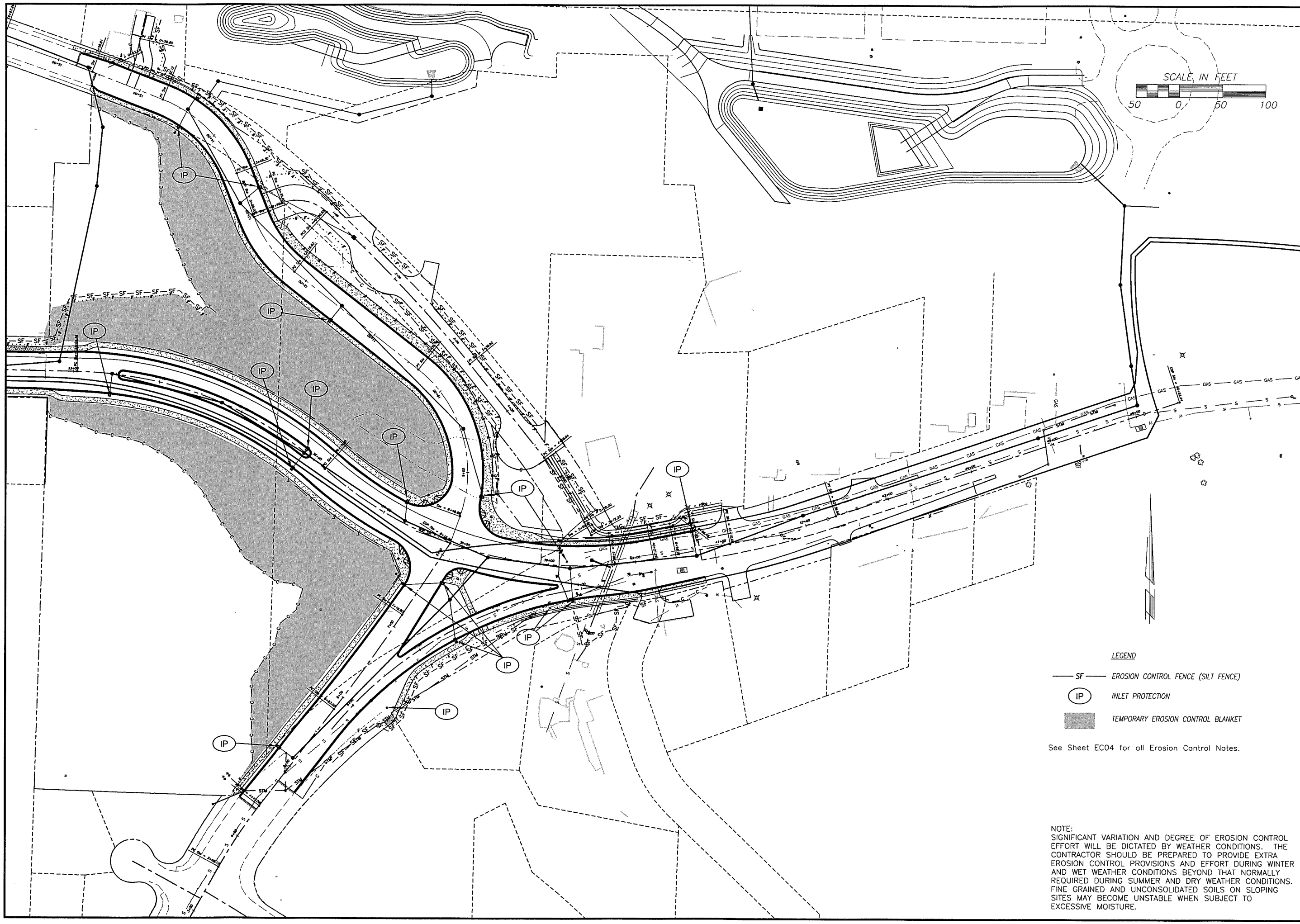

LEGEND

SF — EROSION CONTROL FENCE (SILT FENCE)

IP — INLET PROTECTION

TEMPORARY EROSION CONTROL BLANKET

See Sheet EC04 for all Erosion Control Notes.

NOTE:
SIGNIFICANT VARIATION AND DEGREE OF EROSION CONTROL EFFORT WILL BE DICTATED BY WEATHER CONDITIONS. THE CONTRACTOR SHOULD BE PREPARED TO PROVIDE EXTRA EROSION CONTROL PROVISIONS AND EFFORT DURING WINTER AND WET WEATHER CONDITIONS BEYOND THAT NORMALLY REQUIRED DURING SUMMER AND DRY WEATHER CONDITIONS. FINE GRAINED AND UNCONSOLIDATED SOILS ON SLOPING SITES MAY BECOME UNSTABLE WHEN SUBJECT TO EXCESSIVE MOISTURE.

DESIGNED	MME
DRAWN	BAK
CRP	381022
HOR.	1"=50'
VERT.	NA
DATE	10/20/01
DWG:	EC02
SHEET	OF

CALL 48 HOURS BEFORE YOU DIG
1-800-553-4344
"It's the Law"
NORTHWEST UTILITIES NOTIFICATION CENTER

MICHAEL M. ENRICK
STATE OF WASHINGTON
29030
REGISTERED PROFESSIONAL ENGINEER
EXPIRES: MAY 26, 2005

DESIGN & ENGINEERING DIVISION
DESIGN SECTION

NW 119TH / 117TH STREET
EROSION CONTROL PLAN

proud past, promising future

CLARK COUNTY
WASHINGTON

N:\CIP\PROJECTS\381022-NW117-119\DESIGN\DWGS\119EC02.dwg, Layout1, 10/6/2004 3:06:34 PM, begleyk

INLET PROTECTION TYPE 4 — BIOFILTER BAGS (STANDARD E-3c)

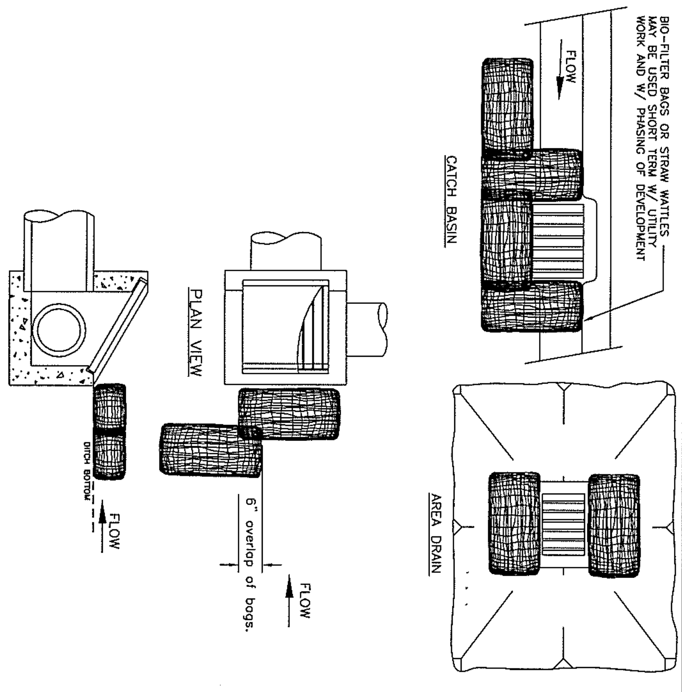

NOTES:

1. ADDITIONAL MEASURES MUST BE CONSIDERED DEPENDING ON SOIL TYPE.
2. BIO-FILTER BAGS SHOULD BE STAKED WHERE APPLICABLE USING (2) 1"x2" WOODEN STAKES OR APPROVED EQUAL PER BAG.
3. STRAW WATTLES MUST BE STABILIZED BY ATTACHING WIRE CLIPS TO THE CATCH BASIN PER MANUFACTURES SPECIFICATIONS.
4. INLET PROTECTION MUST BE REGULARLY INSPECTED BY THE EROSION CONTROL INDIVIDUAL TO INSURE PROPER PLACEMENT/FUNCTION AND MAINTENANCE.
5. SEE INLET PROTECTION NOTES STD. PLAN E-3

DWG: E-3c.DWG — Department of Public Works, CLARK COUNTY WASHINGTON, proud past, promising future — COUNTY ENGINEER — INLET PROTECTION TYPE 4 BIOFILTER BAGS — APPROVED 01/01/04 DATE — STANDARD PLAN No. E-3c — DESIGNED SCH, DRAWN SCH, DATE 08/07/02 — NO. | REVISIONS | DATE | BY

STANDARD CONSTRUCTION ENTRANCE (STANDARD E-1)

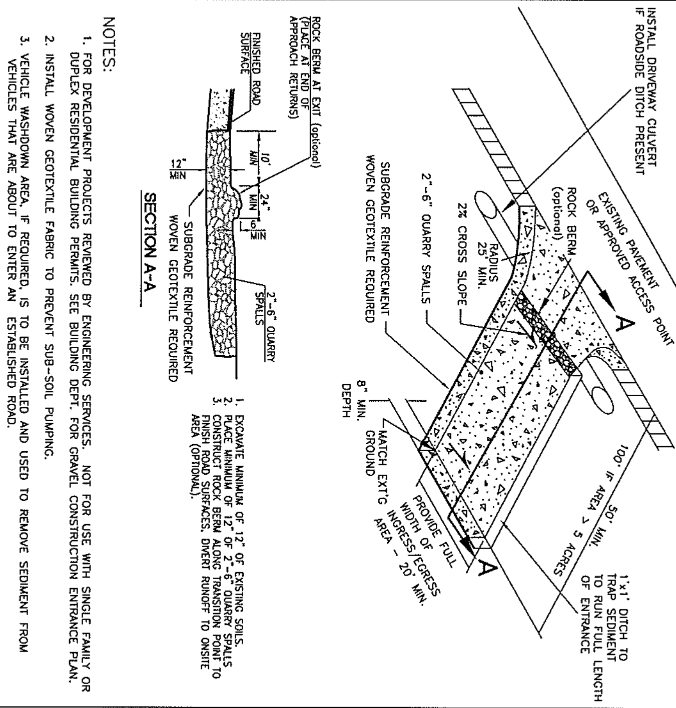

NOTES:

1. FOR DEVELOPMENT PROJECTS REVIEWED BY ENGINEERING SERVICES. NOT FOR USE WITH SINGLE FAMILY OR DUPLEX RESIDENTIAL BUILDING PERMITS. SEE BUILDING DEPT. FOR GRAVEL CONSTRUCTION ENTRANCE PLAN.
2. INSTALL WOVEN GEOTEXTILE FABRIC TO PREVENT SUB-SOIL PUMPING.
3. VEHICLE WASHDOWN AREA, IF REQUIRED, IS TO BE INSTALLED AND USED TO REMOVE SEDIMENT FROM VEHICLES THAT ARE ABOUT TO ENTER AN ESTABLISHED ROAD.
4. WASHDOWN AREA TO BE MADE UP OF CLEAN 2"- 6" QUARRY SPALLS, 1" DEEP (MIN) OVER WOVEN GEOTEXTILE FABRIC. WASHDOWN AREA TO BE FULL WIDTH OF ENTRANCE AND 50' (MIN.), AND 100' IF EXPOSED SOIL IS OVER 5 ACRES.
5. AT TIME OF PRECONSTRUCTION MEETING, THE COUNTY INSPECTOR MAY REQUIRE THE ENTRANCE TO BE PAVED TO THE EDGE OF THE RIGHT-OF-WAY PRIOR TO THE INSTALLATION OF A WASHDOWN ENTRANCE TO AVOID DAMAGE TO THE EXISTING ROADWAY.
6. THE RESPONSIBLE EROSION CONTROL INDIVIDUAL IS TO ENSURE THAT ALL VEHICLES USE THIS ENTRANCE AND ARE TO BE INSPECTED AND CLEANED OF SOILS BEFORE LEAVING PROJECT. AND THAT THE ENTRANCE IS TO BE KEPT CLEAN AT ALL TIMES.

DWG: E-1.DWG — Department of Public Works, CLARK COUNTY WASHINGTON, proud past, promising future — COUNTY ENGINEER — STANDARD CONSTRUCTION ENTRANCE — APPROVED 01/01/04 DATE — STANDARD PLAN No. E-1 — DESIGNED SCH, DRAWN SCH, DATE 07/07/03 — NO. | REVISIONS | DATE | BY

STANDARD SEDIMENT FENCE (STANDARD E-4)

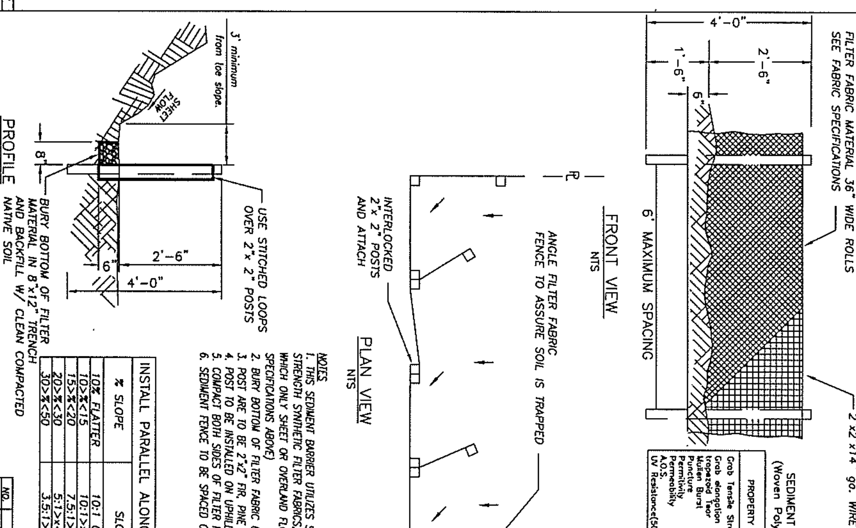

SEDIMENT FENCE FABRIC SPECIFICATIONS (Woven Polypropylene sediment fence fabric)

PROPERTY	TEST PROCEDURE	MIN. FABRIC VALUE
Grab Tensile Strength	ASTM D-4632	180 lbs.
Grab elongation	ASTM D-4632	15%
trapezoid Tear	ASTM D-4533	70 lbs.
Mullen Burst	ASTM D-3786	300 psi.
Puncture	ASTM D-4833	80 lbs.
Permitivity	ASTM D-4491	0.07 sec-1
Permeability	ASTM D-4491	.005 cm/sec
A.O.S.	ASTM D-4751	50 U.S. Sieve
UV Resistance(500 hrs)	ASTM D-4355	90%

NOTES

1. THIS SEDIMENT BARRIER UTILIZES STANDARD STRENGTH OR EXTRA STRENGTH SYNTHETIC FILTER FABRICS. IT IS DESIGNED FOR SITUATIONS IN WHICH ONLY SHEET OR OVERLAND FLOWS ARE EXPECTED. (SEE FABRIC SPECIFICATIONS ABOVE)
2. BURY BOTTOM OF FILTER FABRIC 6" VERTICALLY BELOW FINISHED GRADE.
3. POST ARE TO BE 2"x2" FIR, PINE OR STEEL FENCE POSTS.
4. POST TO BE INSTALLED ON UPHILL SIDE OF SLOPE.
5. COMPACT BOTH SIDES OF FILTER FABRIC TRENCH.
6. SEDIMENT FENCE TO BE SPACED ON SLOPES PER TABLE BELOW.

INSTALL PARALLEL ALONG CONTOURS AS FOLLOWS

% SLOPE	SLOPE	MAX. SPACING ON SLOPE
10% FLATTER	10:1 OR FLATTER	300 ft.
10>%<15	10:1>x<7.5:1	150 ft.
15>%<20	7.5:1>x<5:1	100 ft.
20>%<30	5:1>x<3.5:1	50 ft.
30>%<50	3.5:1>x<2:1	25 ft.

DWG: E-4.DWG — Department of Public Works, CLARK COUNTY WASHINGTON, proud past, promising future — COUNTY ENGINEER — STANDARD SEDIMENT FENCE — APPROVED 01/01/04 DATE — STANDARD PLAN No. E-4 — DESIGNED SCH, DRAWN SCH, DATE 07/07/03 — NO. | REVISIONS | DATE | BY

INLET PROTECTION TYPE 1 — GRAVEL AND WIRE MESH (STANDARD E-3)

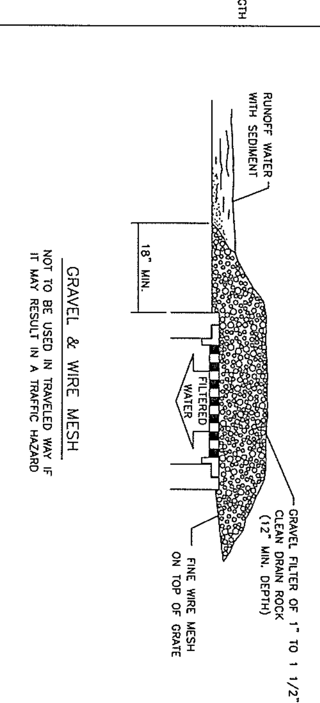

INLET PROTECTION NOTES:

1. INLET PROTECTION IS INTENDED TO PREVENT COARSE SEDIMENT FROM ENTERING STORM DRAINAGE SYSTEMS BY FILTERING RUNOFF AND RETAINING SEDIMENT BEFORE IT REACHES A DRAINAGE OR STORM SEWER SYSTEM.
2. PLACE INLET PROTECTION IN AREAS WHERE WATER CAN POND, AND WHERE PONDING WILL NOT HAVE ADVERSE IMPACTS.
3. INLET PROTECTION MUST ALLOW FOR OVERFLOW IN A SEVERE STORM EVENT.
4. INLET PROTECTION TYPES INCLUDE:
   - TYPE 1 – GRAVEL AND WIRE MESH
   - TYPE 2 – MASONRY AND ROCK
   - TYPE 3 – SEDIMENT FENCE
   - TYPE 4 – BIOFILTER BAGS
   - TYPE 5 – CATCH BASIN INSERT
5. INSPECT ONCE PER WEEK ON ACTIVE SITES, ONCE EVERY TWO WEEKS ON INACTIVE SITES, AND WITHIN 24 HOURS FOLLOWING A 0.5 INCH RAIN EVENT.
6. CLEAN INLET PROTECTION DURING AND AFTER EACH SIGNIFICANT STORM AND REMOVE SEDIMENT FROM BEHIND STRUCTURE AFTER EVERY STORM.
7. IF ROCK BECOMES CLOGGED WITH SEDIMENT, IT MUST BE CAREFULLY REMOVED FROM THE INLET AND EITHER CLEANED OR REPLACED.
8. ASSESS THE IMPACT OF ALLOWING WATER TO POND AT THE INLET AND PROVIDE AN OVERFLOW WEIR OR SOME OTHER TYPE OF RELIEF AS NEEDED.
9. CONSIDER THE EFFECT OF PLACING OBSTRUCTIONS AT INLETS ON GRADE MAY HAVE ON THEIR EFFICIENCY.
10. USE MECHANICAL MEANS TO REMOVE SEDIMENT DEPOSITS (SHOVEL, BROOM, SWEEPER/VACTOR UNIT).
11. REMOVE SEDIMENT ACCUMULATED ON OR AROUND THE PROTECTION AS NEEDED TO MAINTAIN INTENDED FUNCTION.
12. REPAIR OR REPLACE MATERIALS AS NEEDED TO ENSURE PROPER FUNCTION.

DWG: E-3.DWG — Department of Public Works, CLARK COUNTY WASHINGTON, proud past, promising future — COUNTY ENGINEER — INLET PROTECTION TYPE 1 GRAVEL AND WIRE MESH — APPROVED 01/01/04 DATE — STANDARD PLAN No. E-3 — DESIGNED SCH, DRAWN SCH, DATE 08/07/02 — NO. | REVISIONS | DATE | BY

WHEEL WASH (STANDARD E-15)

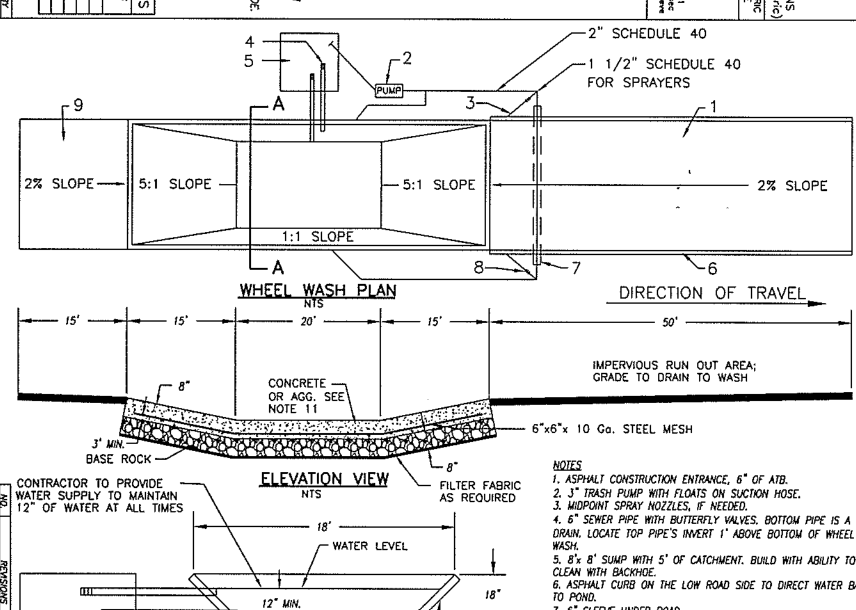

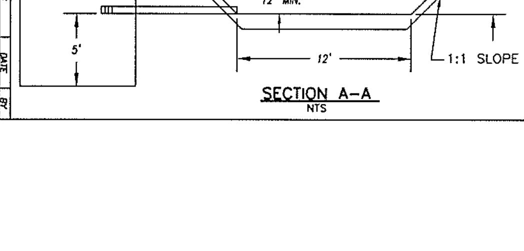

NOTES

1. ASPHALT CONSTRUCTION ENTRANCE, 6" OF ATB.
2. 3" TRASH PUMP WITH FLOATS ON SUCTION HOSE.
3. MIDPOINT SPRAY NOZZLES, IF NEEDED.
4. 6" SEWER PIPE WITH BUTTERFLY VALVES. BOTTOM PIPE IS A DRAIN. LOCATE TOP PIPE'S INVERT 1' ABOVE BOTTOM OF WHEEL WASH.
5. 8'x 8' SUMP WITH 5' OF CATCHMENT. BUILD WITH ABILITY TO CLEAN WITH BACKHOE.
6. ASPHALT CURB ON THE LOW ROAD SIDE TO DIRECT WATER BACK TO POND.
7. 6" SLEEVE UNDER ROAD.
8. BALL VALVES.
9. ATB APRON TO PROTECT FROM SPLASHING WATER.
10. CONTRACTOR TO REMOVE ACCUMULATED SEDIMENT FROM WHEEL WASH; MAY BE PIPED TO AN APPROVED SEDIMENT TRAP.
11. USE GEOTEXTILE FABRIC WITH AGGREGATE FOR A TEMPORARY WHEEL WASH.

DWG: E-15 — Department of Public Works, CLARK COUNTY WASHINGTON, proud past, promising future — COUNTY ENGINEER — WHEEL WASH — APPROVED 01/01/04 DATE — STANDARD PLAN No. E-15 — DESIGNED SCH, DRAWN SCH, DATE 08/12/02 — NO. | REVISIONS | DATE | BY

INLET PROTECTION TYPE 2 — MASONRY AND ROCK (STANDARD E-3a)

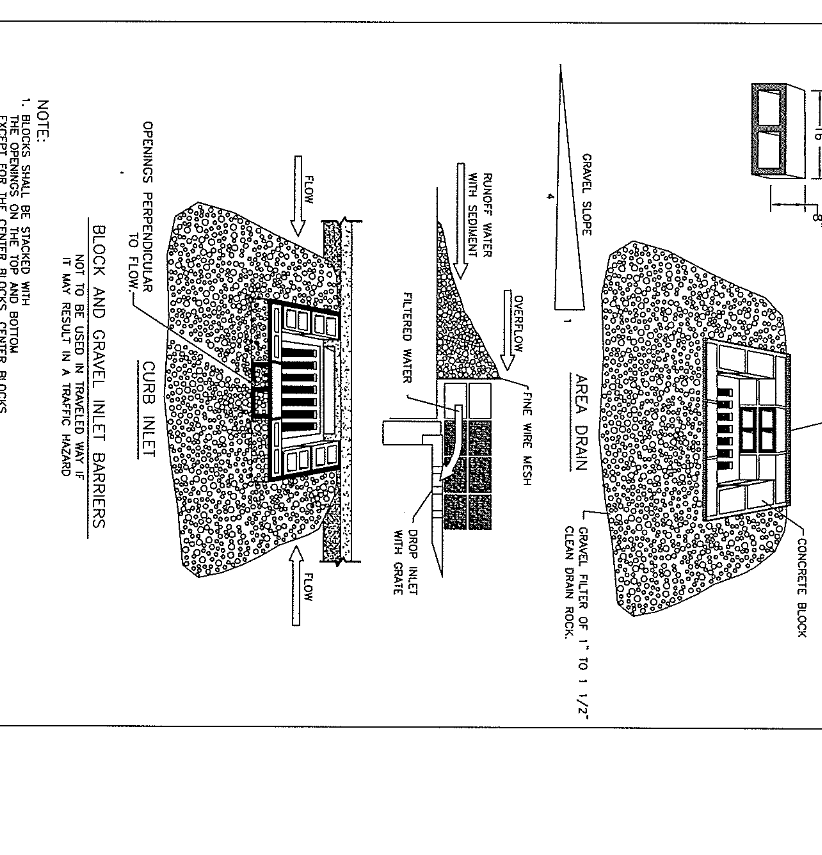

NOTE:

1. BLOCKS SHALL BE STACKED WITH THE OPENINGS ON THE TOP AND BOTTOM EXCEPT FOR THE CENTER BLOCKS. CENTER BLOCKS WILL HAVE OPENINGS PERPENDICULAR TO FLOW.
1. SEE INLET PROTECTION NOTES STD. PLAN E-3

DWG: E-3a.DWG — Department of Public Works, CLARK COUNTY WASHINGTON, proud past, promising future — COUNTY ENGINEER — INLET PROTECTION TYPE 2 MASONRY AND ROCK — APPROVED 01/01/04 DATE — STANDARD PLAN No. E-3a — DESIGNED SCH, DRAWN SCH, DATE 08/07/02 — NO. | REVISIONS | DATE | BY

CLARK COUNTY WASHINGTON — proud past, promising future

DESIGN & ENGINEERING DIVISION
DESIGN SECTION

NW 119TH / 117TH STREET
EROSION CONTROL DETAILS

MICHAEL M. EMRICK — STATE OF WASHINGTON — 29030 REGISTERED PROFESSIONAL ENGINEER — EXPIRES:MAY 26, 2005

CALL 48 HOURS BEFORE YOU DIG
1-800-553-4344
"It's the Law"
NORTHWEST UTILITIES NOTIFICATION CENTER

DESIGNED	MME
DRAWN	BAK
CRP	381022
HOR.	NA
VERT.	NA
DATE	10/20/01
DWG:	EC03
SHEET	OF

STANDARD NOTES FOR EROSION CONTROL PLAN

1. The Contractor shall install and maintain BMP's as shown and perform all actions necessary to prevent erosion, and control sediment from leaving the construction site. Site Contractor shall comply with Clark County Code Chapter 40.380.050.

2. All erosion control measures shall be in-place and in working condition prior to disturbing and exposing any soil surfaces (i.e. silt fence, construction entrance, sedimentation barriers, sedimentation traps).

3. All erosion prevention and control BMP's shall be maintained and repaired as needed to insure continued performance of their intended function. Needed repairs shall be made as soon as practicable. They are to remain in place and operational during all phases of construction. Construction activities shall not continue or resume until repairs to erosion control facilities are made and the facilities are functional. Any sediment leaving the site or discharging to a sensitive area shall be stopped and controlled immediately. Contaminated areas shall be cleaned and restored.

4. Clearing limits and work area limits shall be delineated and marked. Do not disturb more area than needed for construction requirements.

5. All sensitive or critical areas (wetlands, steep slopes, natural waterways), and buffers shall all be clearly delineated and clearly marked, and protected from sediment deposition.
6. Sediment laden runoff shall be prevented from entering all existing storm water catch basins and inlets affected by construction.

7. No exposed, bare soils shall remain unstabilized for more than two days during the period October 1 thru April 30 or for more than seven days during the period of May 1 through September 30. All disturbed soil surfaces shall be stabilized by a suitable application of "Best Management Practices".

8. Where feasible, no more than 500 feet of trench shall be open at one time. Excavated material shall be placed on the up-hill side of trenches provided it does not conflict with safety requirements.

9. Dewatering devices shall discharge into a sediment trap or sediment pond. No discharge shall be made to a paved street or stormwater collection system without first removing sediment.

10. Cut and fill slopes shall be constructed in a manner that will minimize erosion. Erosion shall be controlled and prevented by such measures as roughening the surface, installation of interceptor ditches, terracing, covering with matting, mulch or plastic sheeting. Runoff shall be prevented from entering a slope and from undercutting the base of slopes.

11. Any soil or debris transported onto roadways and sidewalks shall be removed. Deposits shall be completely removed by shoveling and/or sweeping. Washing shall not be utilized unless specifically approved in writing by the County.

12. All permanent infiltration systems shall be isolated and protected from sediment laden runoff entering to avoid risk of reducing the ability of the systems to infiltrate. Isolation and protection shall not be removed until the drainage area tributary to the system is completely stabilized.

CONTINUED ON SHEET 2

NO.	REVISIONS	DATE	BY

DWG: ECN1.DWG

Department of Public Works
CLARK COUNTY
WASHINGTON
proud past, promising future

STANDARD NOTES FOR EROSION CONTOL PLAN

APPROVED

Peter Capell
COUNTY ENGINEER

01/01/04
DATE

STANDARD
ECN1
PLAN No.
DESIGNED SCH
DRAWN SCH
DATE 08/02/02

STANDARD NOTES FOR EROSION CONTROL PLAN (CONTINUED)

13. All conveyance channels, both temporary and permanent shall be stabilized to prevent erosion of the channel. Stabilization shall extend to areas at outlets and downstream reaches vulnerable to erosion resulting from flow discharging from the channel.

14. If BMP's shown are utilized but are insufficient to prevent sediment from reaching water bodies, adjacent properties, or public rights-of-way; additional BMP's shall be implemented immediately to prevent further encroachment of sediment.

15. Stabilized areas shall be provided for employee parking and storage of construction materials. Erodeable stockpiles of earthen materials, such as topsoil, silty and clayey soils; and landscape materials, shall be covered when not being incorporated in the work. Erosion control BMP's shall be utilized as necessary to prevent sediment laden runoff from leaving or sediment being transported from these areas from vehicle activity.

16. All pollutants other than sediment that occur during construction shall be handled and disposed of in a manner that does not cause contamination of storm water.

17. The Contractor shall keep an inspection log of the condition of the erosion control facilities. Erosion control facilities shall be inspected at least weekly and after each rainfall. The inspection log shall be kept at the project site at a designated location and shall be available for review by the County. An individual that has successfully completed the County's Erosion Control Certification course shall perform inspections and maintain the log.

18. All temporary BMP's shall be removed within 30 days after final site stabilization is achieved. Trapped sediment shall be deposited and stabilized on site. Areas disturbed resulting from removal shall be permanently stabilized.

19. Construction shall not be considered complete and acceptable until all disturbed soil surfaces have been protected from erosion with permanent landscaping, covering with impervious surfaces, restored to original undisturbed condition or permanently stabilized.

20. Vegetated stabilization and landscaping shall be fertilized, watered and maintained to insure that growth of vegetation is established and sustained.

21. During dry weather construction periods the contractor shall provide project-specific dust control measures that may include: Seeding, Mulching, Matting, Water, Tackifier, or Chemical Soil Stabilizers. The contractor shall maintain the dust control measures through dry weather periods until all disturbed areas have been stabilized. Immediately re-stabilize areas disturbed by contractor's operations or other activities (wind, water, vandalism, etc.).

22. Entry onto the construction site shall be restricted to a single approved entrance as shown on the plan.

23. Maintenance and repair of heavy equipment and vehicles which involve potential contaminants (oil,solvents,hydraulic fluid, etc.) must be conducted in a manner which prevents contamination of soils, surface water and ground water. Tarps, drip pans, or other appropriate measures shall be used as necessary.

24. Stripping, topsoil, and unsuitable material stockpiles shall be hydroseeded with "regreen wheat x wheat grass hybrid" by Hobbs and Hobkins (or approved equal). Maintenance of stockpile areas and reapplication of hydroseed covering shall be required if bare soil is present. During winter and wet weather conditions, stockpiles shall be covered with plastic sheeting per detail E-16.

SHEET 2 OF 2

NO.	REVISIONS	DATE	BY

DWG: ECN.DWG

Department of Public Works
CLARK COUNTY
WASHINGTON
proud past, promising future

STANDARD NOTES (CONTINUED) FOR EROSION CONTOL PLAN

APPROVED

Peter Capell
COUNTY ENGINEER

01/01/04
DATE

STANDARD
ECN2
PLAN No.
DESIGNED SCH
DRAWN SCH
DATE 07/22/03

DESIGNED MME
DRAWN BAK
CRP 381022
HOR. NA
VERT. NA
DATE 10/20/01
DWG: ECO4
SHEET OF

CALL 48 HOURS BEFORE YOU DIG
1-800-553-4344
"It's the Law"
NORTHWEST UTILITIES NOTIFICATION CENTER

PAUL M. EARLICH
STATE OF WASHINGTON
20530
REGISTERED PROFESSIONAL ENGINEER
EXPIRES: MAY 28, 2005

DESIGN & ENGINEERING DIVISION
DESIGN SECTION

NW 119TH / 117TH STREET
EROSION CONTROL NOTES

proud past, promising future
CLARK COUNTY
WASHINGTON

N:\CIP\PROJECTS\381022-NW117-119\DESIGN\DWGS\119ec03-4.dwg, Layout1 (2), 10/4/2004 9:39:58 AM, begleyk

N:\CIP\PROJECTS\381022-NW117-119\DESIGN\DWGS\119SP01.dwg, Layout1, 10/4/2004 2:16:54 PM, begleyk

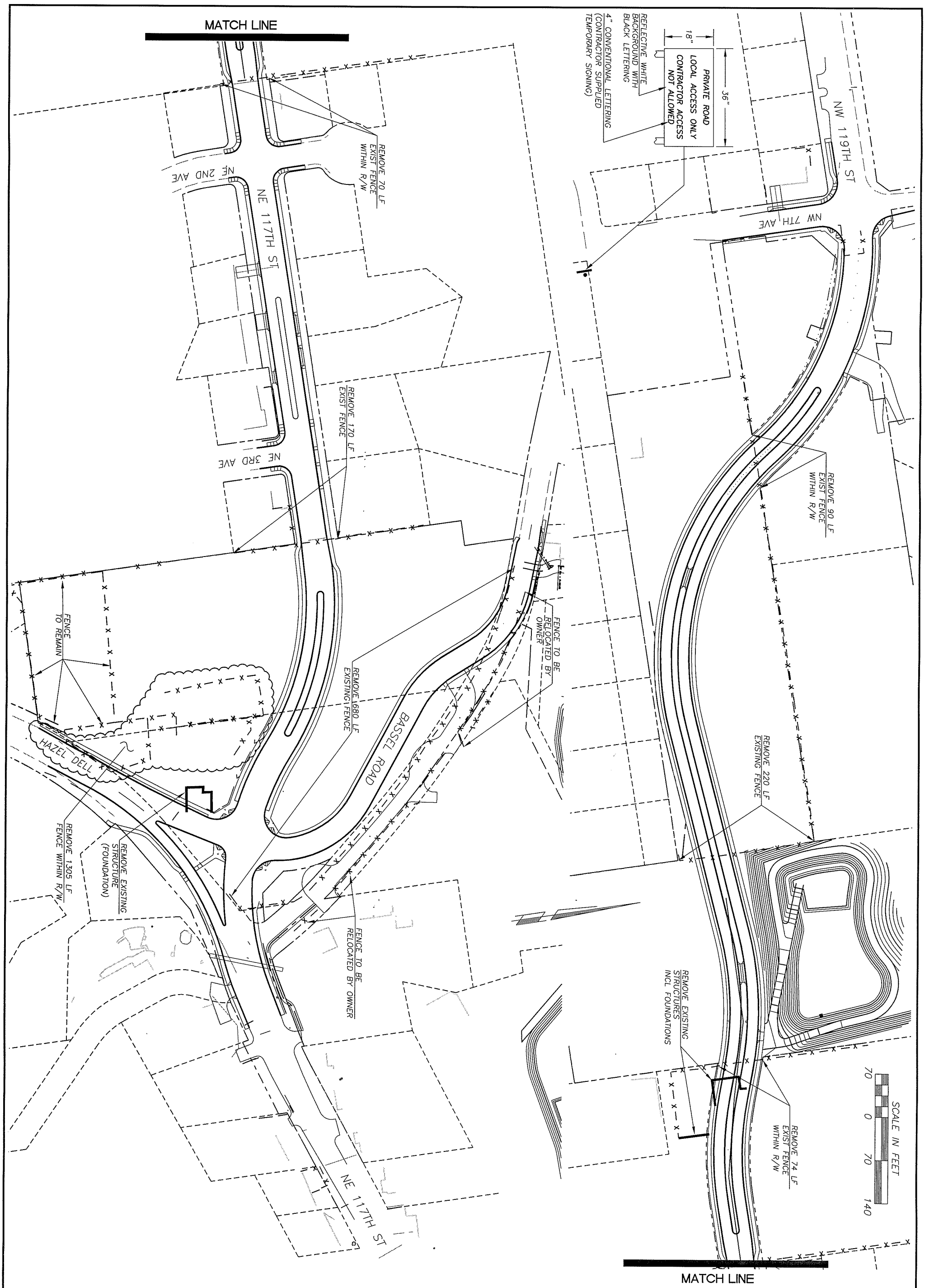

proud past, promising future

CLARK COUNTY
WASHINGTON

DESIGN & ENGINEERING DIVISION
DESIGN SECTION

NW 119TH / 117TH STREET
SITE PREPARATION PLAN

MICHAEL M. EMRICK
STATE OF WASHINGTON
29030
REGISTERED
PROFESSIONAL ENGINEER
EXPIRES: MAY 26, 2005

CALL 48 HOURS BEFORE YOU DIG
1-800-553-4344
"It's the Law"
NORTHWEST UTILITIES NOTIFICATION CENTER

DESIGNED	MME
DRAWN	BAK
CRP	381022
HOR.	1"=70'
VERT.	NA
DATE	12/1/02
DWG:	SP01
SHEET	OF

E:\projects\2077_9\CAD\Final\dwg\Prod\20779_SWF1.dwg, 10/04/04 04:20:03 PM, rad

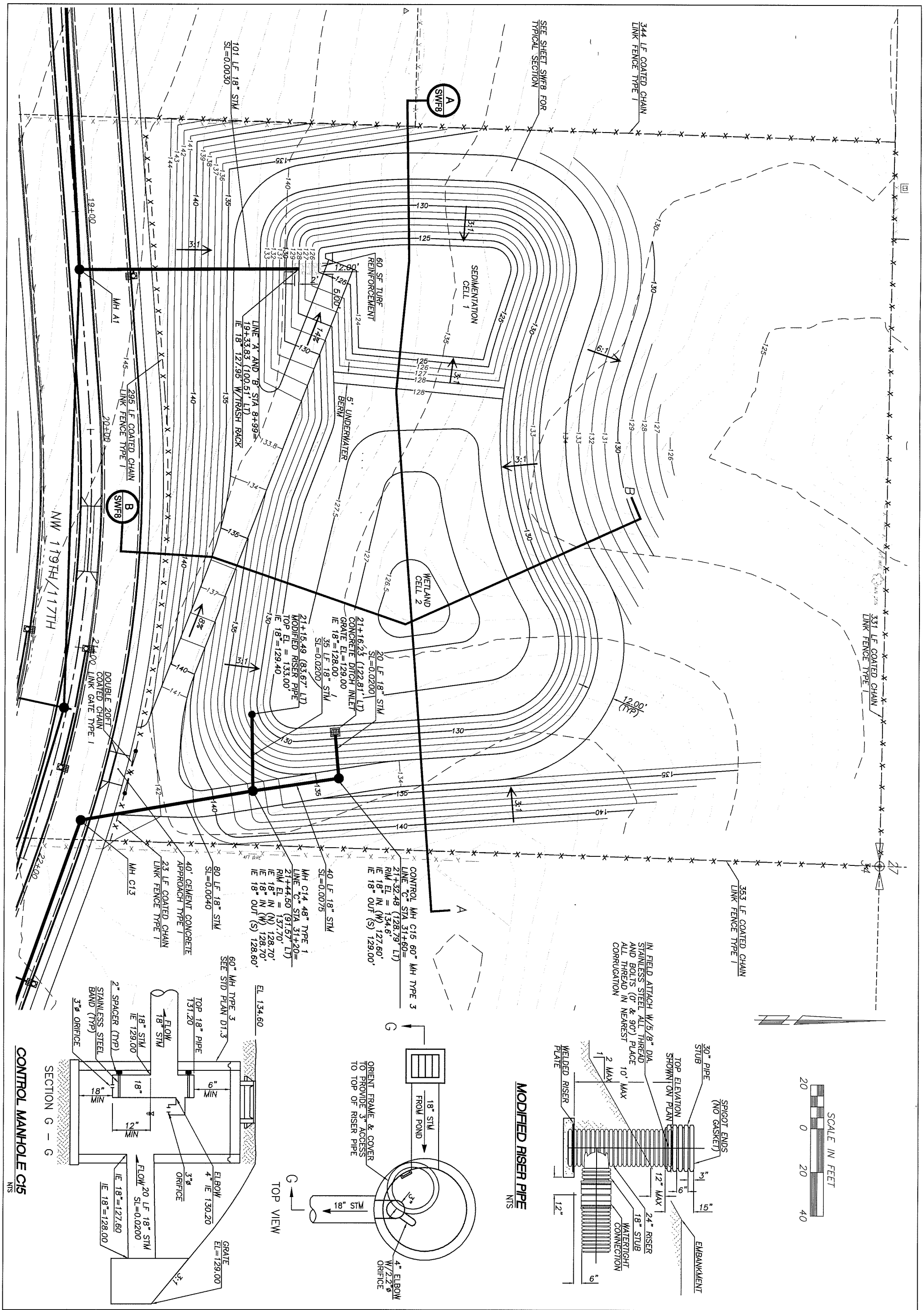

proud past, promising future

CLARK COUNTY WASHINGTON

DESIGN & ENGINEERING DIVISION
DESIGN SECTION

NW 119TH / 117TH STREET
STORMWATER FACILITY #1

RICHARD E. DARLAND, STATE OF WASHINGTON, 33172, REGISTERED PROFESSIONAL ENGINEER
EXPIRES: MARCH 17, 2005

CALL 48 HOURS BEFORE YOU DIG
1-800-553-4344
"It's the Law"
NORTHWEST UTILITIES NOTIFICATION CENTER

DESIGNED	SWG
DRAWN	RAD
CRP	2077_9
HOR.	1"=20'
VERT.	NA
DATE	OCT 2004
DWG:	SWF1
SHEET	OF

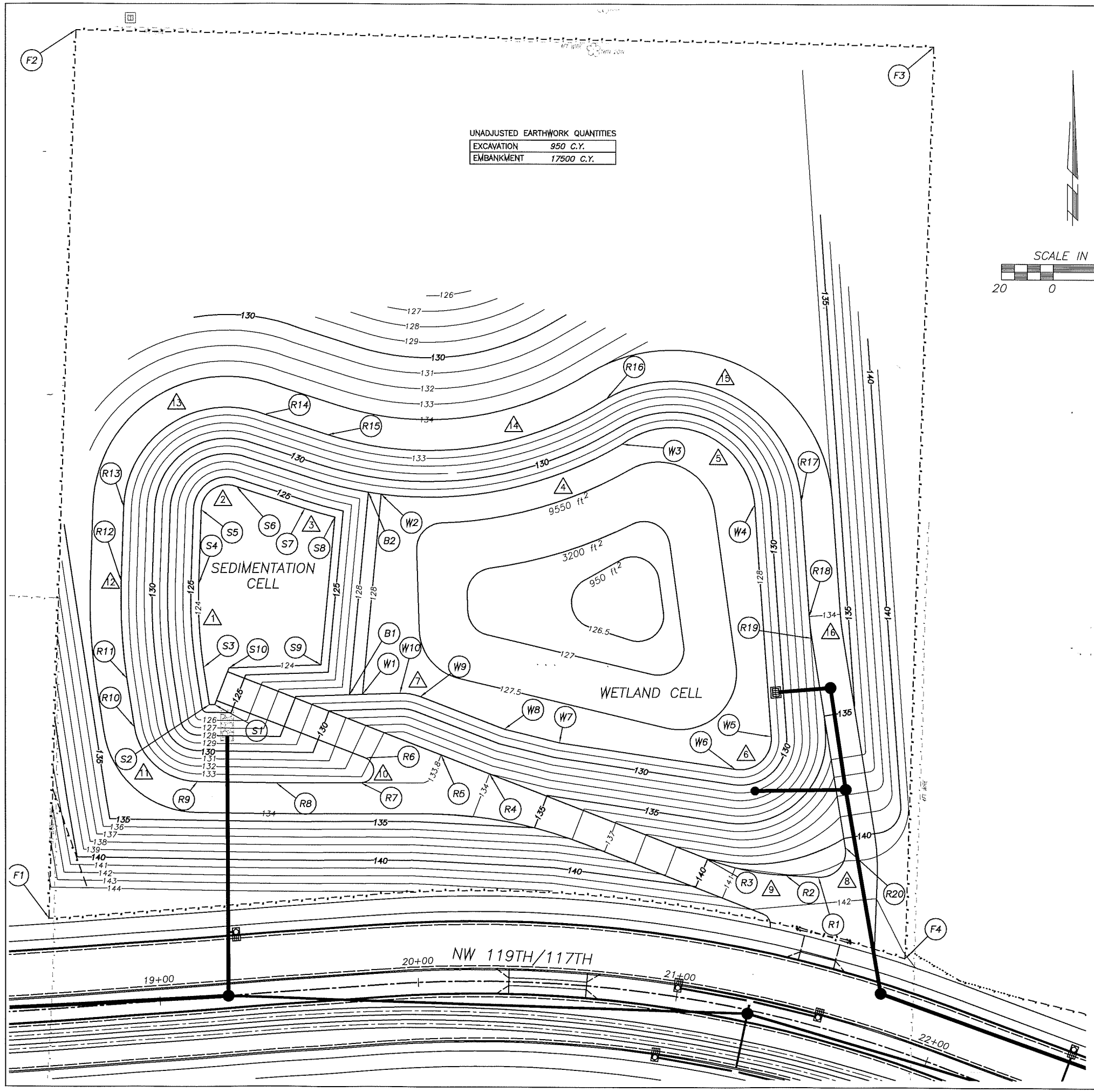

UNADJUSTED EARTHWORK QUANTITIES

EXCAVATION	950 C.Y.
EMBANKMENT	17500 C.Y.

SCALE IN FEET

20 0 20 40

CURVE TABLE

NUMBER	PC	PT	RADIUS	DELTA	ARC LENGTH
1	S3	S4	179.1'	10°22'47"	32.44'
2	S5	S6	10.0'	109°06'23"	19.04'
3	S7	S8	156.6'	4°26'00"	12.11'
4	W3	W2	145.1'	38°13'35"	96.81'
5	W3	W4	32.1'	123°05'02"	68.84'
6	W5	W6	12.0'	102°37'24"	21.49'
7	W10	W9	20.0'	23°11'55"	8.10'
8	R20	R1	10.0'	101°54'53"	17.79'
9	R2	R3	100.0'	18°23'12"	32.09'
10	R6	R7	5.0'	158°38'39"	13.84'
11	R9	R10	25.0'	80°16'35"	35.03'
12	R11	R12	209.1'	10°22'47"	37.87'
13	R13	R14	40.0'	109°06'23"	76.17'
14	R15	R16	127.1'	50°33'56"	112.18'
15	R16	R17	50.0'	116°31'04"	101.68'
16	R19	R18	100.0'	04°56'39"	8.63'

ACCESS ROAD GRADING POINTS

PNT	STATION	OFFSET	ELEV	DESC
R1	21+42.58	56.12' LT	141.20	EDGE OF ROAD
R2	21+31.43	53.92' LT	141.10	EDGE OF ROAD
R3	21+02.61	54.72' LT	139.90	EDGE OF ROAD
R4	20+27.16	80.29' LT	134.00	EDGE OF ROAD
R5	20+11.14	87.78' LT	133.80	EDGE OF ROAD
R6	19+86.22	87.94' LT	132.90	EDGE OF ROAD
R7	19+83.80	78.45' LT	133.80	EDGE OF ROAD
R8	19+51.24	80.83' LT	133.80	EDGE OF ROAD
R9	19+20.88	83.63' LT	133.80	EDGE OF ROAD
R10	18+98.26	106.59'LT	133.80	EDGE OF ROAD
R11	18+96.78	125.66'LT	133.80	EDGE OF ROAD
R12	18+97.50	163.48'LT	133.80	EDGE OF ROAD
R13	19+00.70	192.13'LT	133.80	EDGE OF ROAD
R14	19+57.73	223.67'LT	133.80	EDGE OF ROAD
R15	19+81.38	214.01'LT	133.80	EDGE OF ROAD
R16	20+57.48	227.38'LT	133.80	EDGE OF ROAD
R17	21+13.38	197.38'LT	133.80	EDGE OF ROAD
R18	21+21.79	154.33'LT	134.00	EDGE OF ROAD
R19	21+23.83	146.12'LT	134.20	EDGE OF ROAD
R20	21+49.05	69.84' LT	140.50	EDGE OF ROAD

POND GRADING POINTS

PNT	STATION	OFFSET	ELEV	DESC
S1	19+29.92	112.92'LT	124.00	POND BOTTOM
S2	19+27.84	113.12'LT	124.00	POND BOTTOM
S3	19+26.70	127.80'LT	124.00	POND BOTTOM
S4	19+27.32	160.19'LT	124.00	POND BOTTOM
S5	19+30.51	188.74'LT	124.00	POND BOTTOM
S6	19+44.76	196.62'LT	124.00	POND BOTTOM
S7	19+70.31	186.13'LT	124.00	POND BOTTOM
S8	19+81.70	182.00'LT	124.00	POND BOTTOM
S9	19+72.00	125.34'LT	124.00	POND BOTTOM
S10	19+36.54	126.78'LT	124.00	POND BOTTOM
B1	19+82.05	112.91'LT	128.16	BERM
B2	19+92.67	190.70'LT	128.16	BERM
W1	19+86.82	112.71'LT	128.00	BERM/TOE OF SLOPE
W2	19+96.23	189.69'LT	128.00	BERM/TOE OF SLOPE
W3	20+62.54	210.31'LT	128.00	TOE OF SLOPE
W4	21+00.79	193.15'LT	128.00	TOE OF SLOPE
W5	21+17.40	105.52'LT	128.00	TOE OF SLOPE
W6	21+07.96	90.57' LT	128.00	TOE OF SLOPE
W7	20+49.81	93.21' LT	128.00	TOE OF SLOPE
W8	20+31.83	97.72' LT	128.00	TOE OF SLOPE
W9	20+05.08	110.64'LT	128.00	TOE OF SLOPE
W10	19+98.65	112.32'LT	128.00	TOE OF SLOPE

FENCE LAYOUT*

PNT	STATION	OFFSET	DESC
F1	18+59.51	35.00' LT	FENCE ANGLE PT
F2	18+96.22	377.42' LT	FENCE ANGLE PT
F3	21+24.02	379.63' LT	FENCE ANGLE PT
F4	21+79.88	35.00' LT	FENCE ANGLE PT

*= CONSTRUCT SOUTH FENCE LINE BETWEEN POINTS F1 & F4 2' NORTH OF BACK OF SIDEWALK

DESIGNED JM/BAK
DRAWN KB/BAK
CRP 381022
HOR. 1"=20'
VERT. NA
DATE OCT 2004
DWG: SWF1A
SHEET OF

CALL 48 HOURS BEFORE YOU DIG
1-800-553-4344
"It's the Law"
NORTHWEST UTILITIES NOTIFICATION CENTER

RICHARD E. DARLAND
STATE OF WASHINGTON
PROFESSIONAL ENGINEER
EXPIRES: MARCH 17, 2005

DESIGN & ENGINEERING DIVISION
DESIGN SECTION

NW 119TH / 117TH STREET STORMWATER FACILITY #1 STAKING PLAN

proud past, promising future
CLARK COUNTY
WASHINGTON

E:\projects\2077_9\CAD\Final\dwg\Prod\20779_SWF1a.dwg, 10/04/04 03:17:11 PM, rad

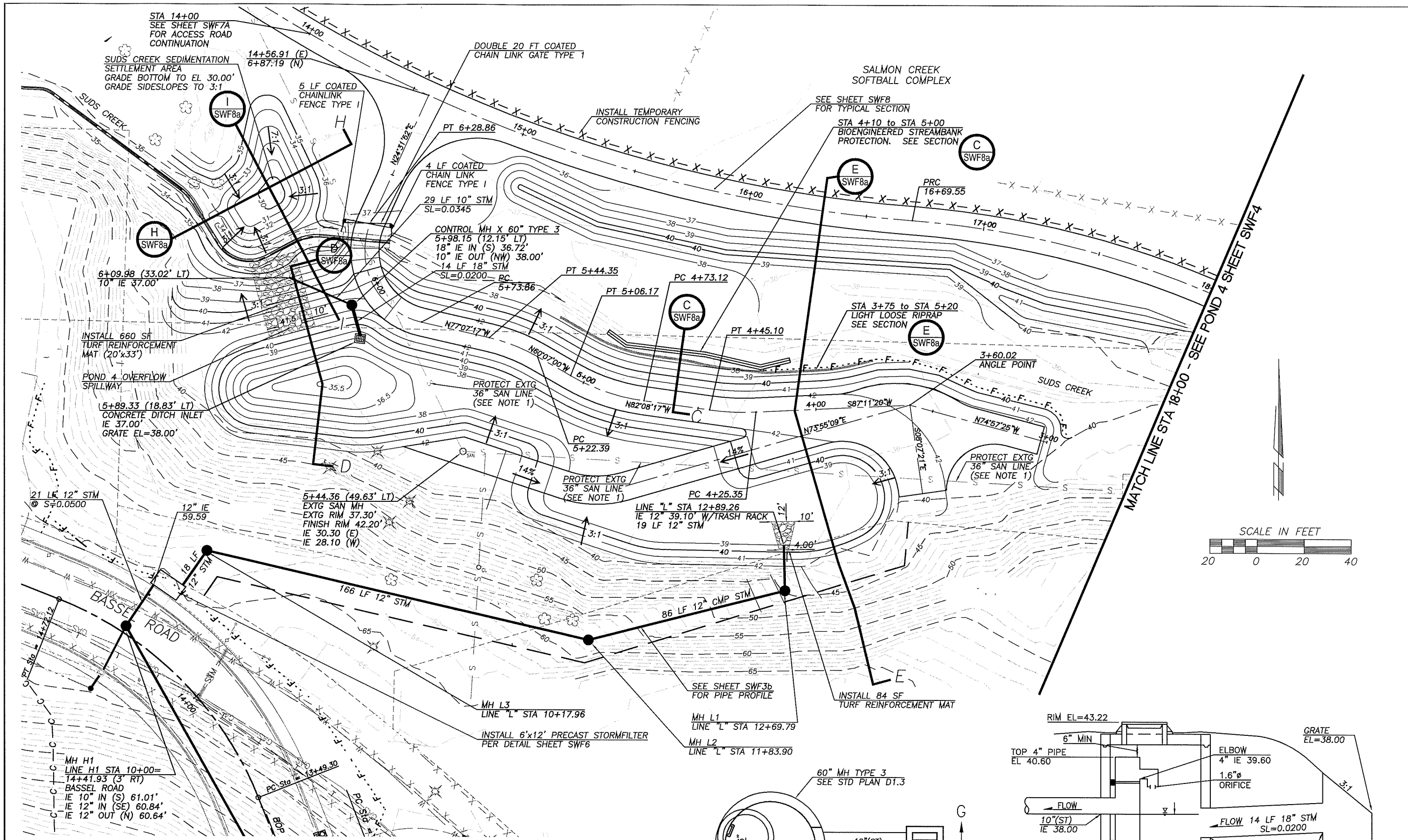

NOTES:

1. "The Contractor shall install a bypass pumping system any time work is occuring within 10 feet of the Salmon Creek Interceptor (existing 30-inch sanitary sewer). See specifications for more information".

2. "Provide notice to Kay Hust, Salmon Creek WWTP Operation Manager, 360-397-2271, one week prior to the start of any work within 10 feet of the Salmon Creek Interceptor (existing 30-inch sanitary sewer)".

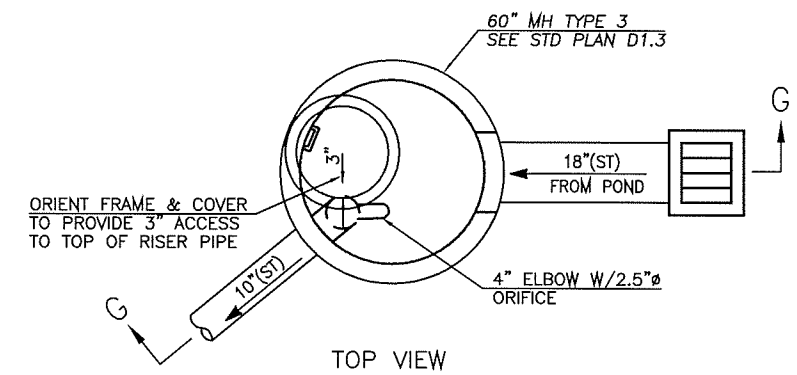

TOP VIEW

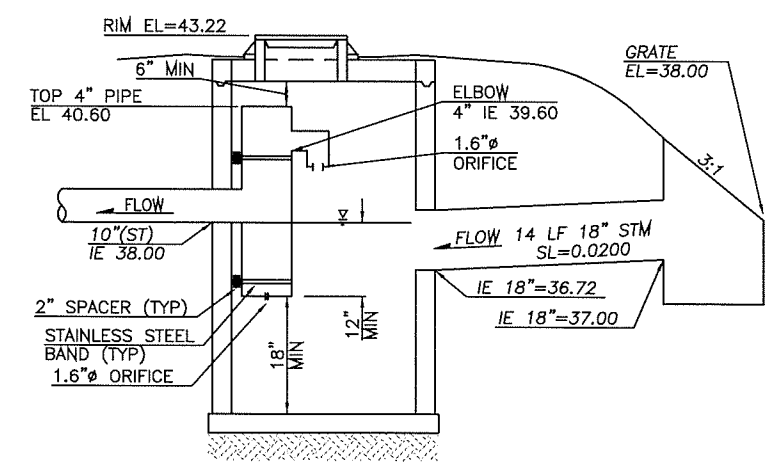

SECTION G – G

CONTROL MANHOLE 'X'

NTS

DESIGNED	SWG
DRAWN	RAD
CRP	2077_9
HOR.	1"=20'
VERT.	N/A
DATE	OCT 2004
DWG:	SWF3
SHEET	OF

CALL 48 HOURS BEFORE YOU DIG 1-800-553-4344 "It's the Law" NORTHWEST UTILITIES NOTIFICATION CENTER

RICHARD E. DARLAND STATE OF WASHINGTON REGISTERED PROFESSIONAL ENGINEER

EXPIRES: MARCH 17, 2005

DESIGN & ENGINEERING DIVISION
DESIGN SECTION

NW 119TH / 117TH STREET
STORMWATER FACILITY #3

proud past, promising future

CLARK COUNTY
WASHINGTON

E:\projects\2077_9\CAD\Final\dwg\Prod\20779_SWF3.dwg, 10/04/04 02:29:30 PM, rad

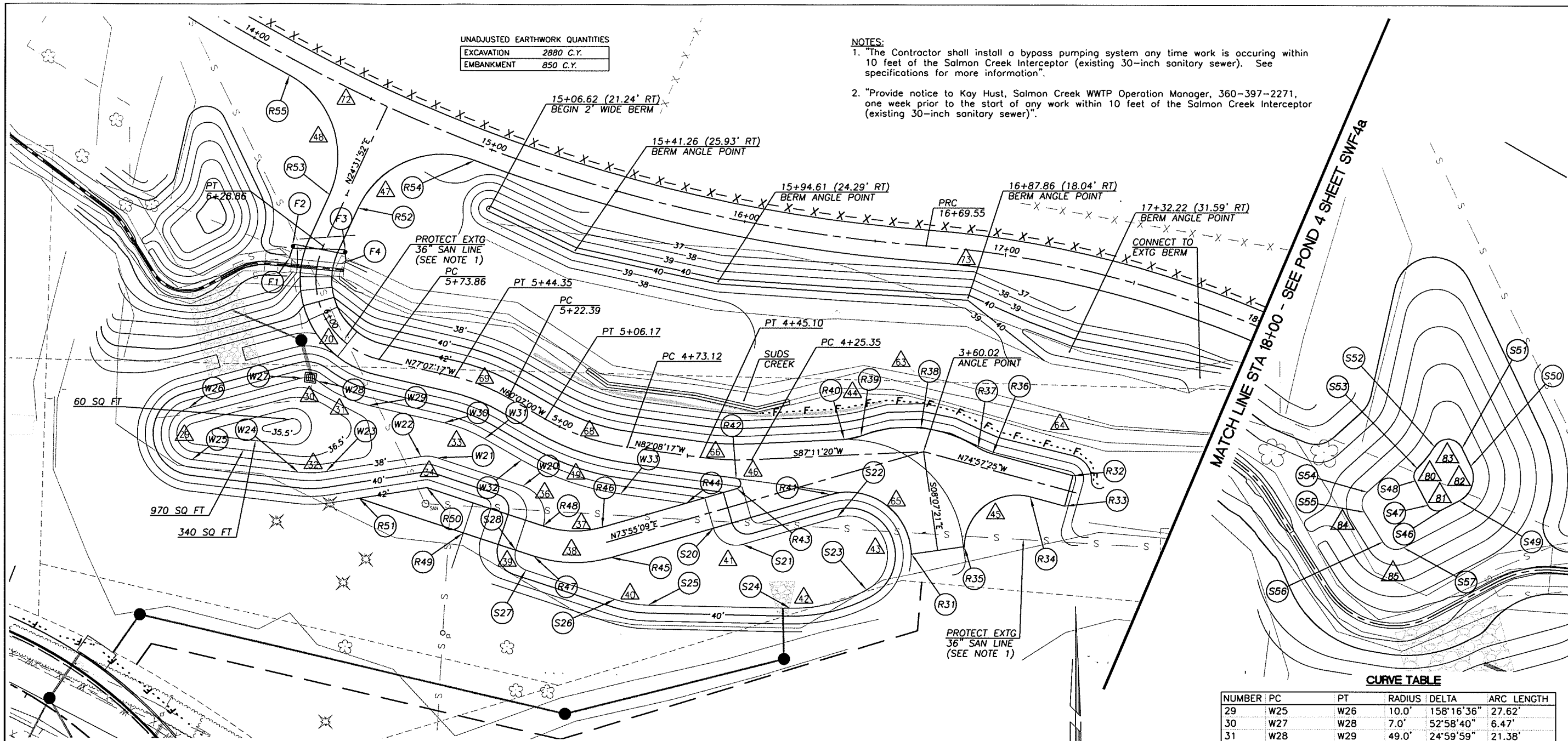

UNADJUSTED EARTHWORK QUANTITIES

EXCAVATION	2880 C.Y.
EMBANKMENT	850 C.Y.

NOTES:

1. "The Contractor shall install a bypass pumping system any time work is occuring within 10 feet of the Salmon Creek Interceptor (existing 30-inch sanitary sewer). See specifications for more information".
2. "Provide notice to Kay Hust, Salmon Creek WWTP Operation Manager, 360-397-2271, one week prior to the start of any work within 10 feet of the Salmon Creek Interceptor (existing 30-inch sanitary sewer)".

SCALE IN FEET

20 0 20 40

ACCESS ROAD GRADING POINTS

PNT	STATION	OFFSET	ELEV	DESC
R31	03+66.47	38.70' LT	41.80	EDGE OF ROAD
R32	03+02.71	6.00' RT	42.00	EDGE OF ROAD
R33	03+02.71	6.00' LT	42.41	EDGE OF ROAD
R34	03+16.27	6.00' LT	42.29	EDGE OF ROAD
R35	03+35.67	30.34' LT	42.00	EDGE OF ROAD
R36	03+34.49	6.00' RT	42.23	EDGE OF ROAD
R37	03+40.38	6.89' RT	42.20	EDGE OF ROAD
R38	03+60.65	9.04' RT	42.12	EDGE OF ROAD
R39	03+83.63	7.02' RT	42.02	EDGE OF ROAD
R40	03+89.93	6.00' RT	42.00	EDGE OF ROAD
R41	03+96.14	14.68' LT	41.72	EDGE OF ROAD
R42	04+31.24	6.96' LT	41.80	EDGE OF ROAD
R43	04+30.97	10.87' LT	40.90	EDGE OF ROAD
R44	04+47.97	18.00' LT	38.00	EDGE OF ROAD
R45	04+73.34	42.44' LT	38.20	EDGE OF ROAD
R46	04+76.92	31.59' LT	38.00	EDGE OF ROAD
R47	04+92.07	49.21' LT	38.20	EDGE OF ROAD
R48	04+92.41	37.22' LT	38.00	EDGE OF ROAD
R49	05+11.52	53.09' LT	42.00	TOP OF SLOPE
R50	05+45.26	43.52' LT	42.00	EDGE OF ROAD
R51	05+69.41	53.34' LT	42.00	EDGE OF ROAD
R52	06+47.50	6.00' RT	36.70	EDGE OF ROAD
R53	06+47.50	6.00' LT	36.50	EDGE OF ROAD
R54	06+82.43	38.76' RT	36.00	EDGE OF ROAD
	14+95.31	6.00' RT	36.00	EDGE OF ROAD
R55	06+82.43	38.76' LT	36.00	EDGE OF ROAD
	14+18.51	6.00' RT	36.00	EDGE OF ROAD

POND GRADING POINTS

PNT	STATION	OFFSET	ELEV	DESC
W20	05+02.01	26.47' LT	38.00	STORAGE BOTTOM
W21	05+43.59	31.59' LT	38.00	STORAGE BOTTOM
W22	05+50.00	32.50' LT	38.00	STORAGE BOTTOM
W23	05+77.88	46.95' LT	38.00	STORAGE BOTTOM
W24	05+81.56	51.40' LT	38.00	STORAGE BOTTOM
W25	05+93.19	72.83' LT	38.00	STORAGE BOTTOM
W26	05+98.41	62.28' LT	38.00	STORAGE BOTTOM
W27	05+90.72	21.09' LT	38.00	STORAGE BOTTOM
W28	05+87.39	18.00' LT	38.00	STORAGE BOTTOM
W29	05+73.86	18.00' LT	38.00	STORAGE BOTTOM
W30	05+44.35	18.00' LT	38.00	STORAGE BOTTOM
W31	05+22.39	18.00' LT	38.00	STORAGE BOTTOM
W32	05+06.17	18.00' LT	38.00	STORAGE BOTTOM
W33	04+73.12	18.00' LT	38.00	STORAGE BOTTOM
S20	04+36.34	25.97' LT	39.00	TOE OF SLOPE
S21	04+24.46	30.54' LT	39.00	TOE OF SLOPE
S22	03+91.61	15.76' LT	39.00	TOE OF SLOPE
S23	03+10.11	15.07' LT	39.00	TOE OF SLOPE
S24	02+74.68	18.36' LT	39.00	TOE OF SLOPE
S25	02+22.26	31.79' LT	39.00	TOE OF SLOPE
S26	02+10.56	36.72' LT	39.00	TOE OF SLOPE
S27	01+77.23	55.01' LT	39.00	TOE OF SLOPE
S28	04+96.50	49.68' LT	39.00	TOE OF SLOPE

POND GRADING POINTS

PNT	STATION	OFFSET	ELEV	DESC
S46	6+23.18	42.14' LT	30.00'	POND BOTTOM
S47	6+23.24	44.96' LT	30.00'	POND BOTTOM
S48	6+24.77	48.55' LT	30.00'	POND BOTTOM
S49	6+24.26	39.43' LT	30.00'	POND BOTTOM
S50	6+27.31	39.49' LT	30.00'	POND BOTTOM
S51	6+28.40	42.32' LT	30.00'	POND BOTTOM
S52	6+27.66	47.28' LT	30.00'	POND BOTTOM
S53	6+25.69	48.92' LT	30.00'	POND BOTTOM
S54	6+23.09	56.75' LT	31.00'	TOE OF SLOPE
S55	6+21.74	56.44' LT	31.00'	TOE OF SLOPE
S56	6+19.93	52.04' LT	31.00'	TOE OF SLOPE
S57	6+19.72	47.99' LT	31.00'	TOE OF SLOPE

CURVE TABLE

NUMBER	PC	PT	RADIUS	DELTA	ARC LENGTH
80	S48	S53	2.0'	73°24'33"	2.56'
81	S46	S47	2.0'	90°00'00"	3.14'
82	S49	S50	5.0'	87°57'03"	7.68'
83	S51	S52	3.0'	123°07'06"	6.45'
84	S54	S55	3.0'	79°39'12"	4.17'
85	S56	S57	3.0'	85°50'22"	4.49'

FENCE LAYOUT

PNT	STATION	OFFSET	DESC
F1	6+21.73	10.88' LT	END POST
F2	6+25.22	10.72' LT	GATE POST
F3	6+30.30	8.54' RT	GATE POST
F4	6+25.80	10.27' RT	END POST

CURVE TABLE

NUMBER	PC	PT	RADIUS	DELTA	ARC LENGTH
29	W25	W26	10.0'	158°16'36"	27.62'
30	W27	W28	7.0'	52°58'40"	6.47'
31	W28	W29	49.0'	24°59'59"	21.38'
32	W23	W24	38.0'	15°52'37"	10.53'
33	W30	W31	56.0'	17°00'16"	16.62'
34	W21	W22	13.0'	27°24'31"	6.22'
35	W33	W32	104.0'	22°01'16"	39.97'
36	W20	R48	12.0'	90°00'00"	18.85'
37	R46	R48	38.0'	34°14'12"	22.71'
38	R45	R47	50.0'	34°14'12"	29.88'
39	S27	S28	6.0'	90°00'00"	9.42'
40	S25	S26	43.0'	16°58'52"	12.74'
41	S21	S20	9.0'	90°00'00"	14.14'
42	S23	S24	59.0'	29°18'48"	30.19'
43	S22	S23	15.0'	167°56'32"	43.97'
44	R39	R40	20'	18°21'40"	6.41'
45	R34	R35	20'	104°00'12"	36.30'
46	R42	R43	2.0'	156°03'26"	5.45'
47	R52	R54	35'	86°19'58"	52.74'
48	R55	R53	35'	86°19'58"	52.74'
63	R39	R37	50'	53°20'23"	46.55'
64	R37	R36	20'	17°07'29"	5.98'
65	R41	R31	24'	97°57'30"	41.03'
66	4+25.35	4+45.10	106'	10°40'23"	19.75'
67	03+87.76	03+99.41	100.0'	06°40'24"	11.65'
68	04+73.12	05+06.17	86.0'	22°01'16"	33.05'
69	05+22.39	05+44.35	74.0'	17°00'16"	21.96'
70	05+73.86	06+28.86	31.0'	101°39'08"	55.00'
71	11+67.72	12+01.84	150.0'	13°01'55"	34.12'
72	13+01.68	16+69.55	600.0'	35°07'44"	367.87'
73	16+69.55	19+21.61	400.0'	36°06'19"	252.06

DESIGNED	SWG
DRAWN	RAD
CRP	2077_9
HOR.	1"=30'
VERT.	NA
DATE	OCT 2004
DWG:	SWF3a
SHEET	OF

CALL 48 HOURS BEFORE YOU DIG 1-800-553-4344 "It's the Law" NORTHWEST UTILITIES NOTIFICATION CENTER

RICHARD E. DARLAND STATE OF WASHINGTON 19931 REGISTERED PROFESSIONAL ENGINEER

EXPIRES: MARCH 17, 2005

DESIGN & ENGINEERING DIVISION
DESIGN SECTION

NW 119TH / 117TH STREET
STORMWATER FACILITY #3 STAKING PLAN

proud past, promising future

CLARK COUNTY WASHINGTON

E:\projects\2077_9\CAD\Final\dwg\Prod\20779_SWF3a.dwg, 10/04/04 03:19:27 PM, rad

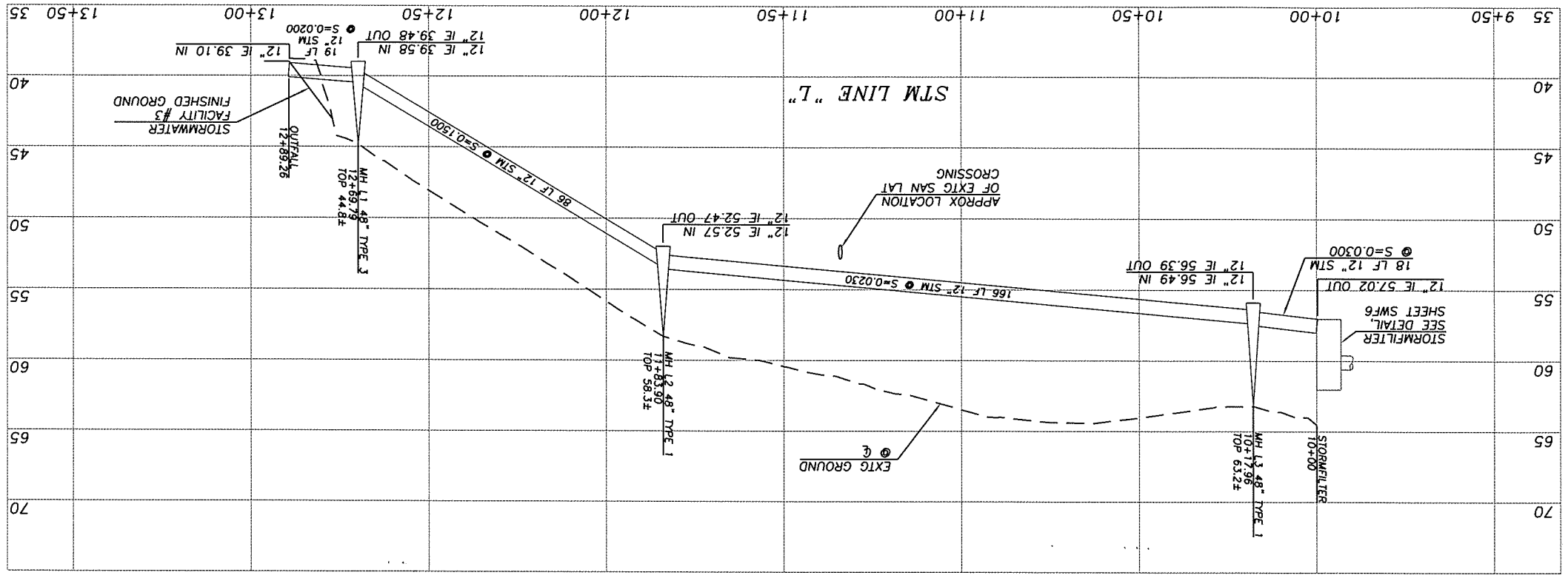

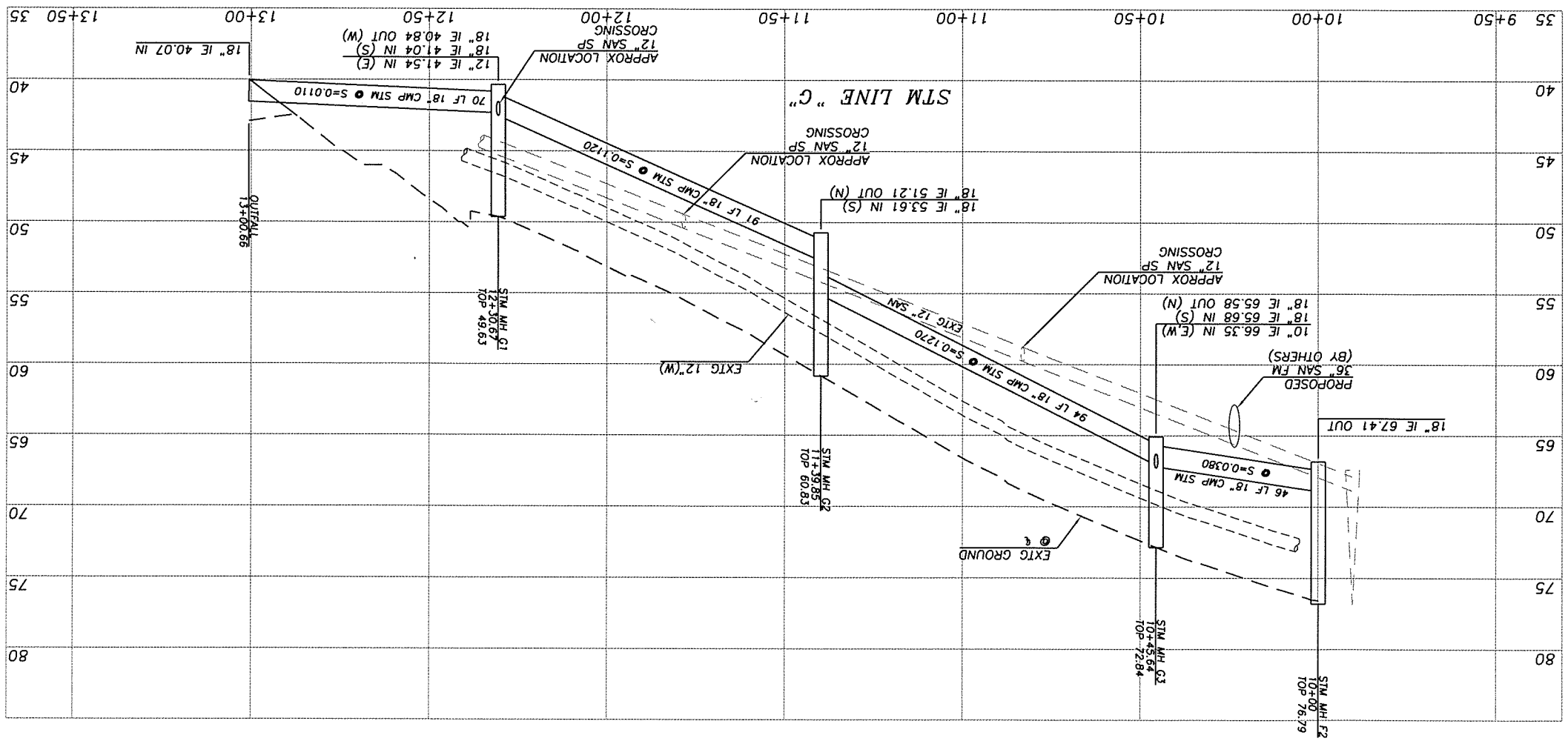

CLARK COUNTY
WASHINGTON

proud past, promising future

DESIGN & ENGINEERING DIVISION
DESIGN SECTION

NW 119TH / 117TH STREET
STORMWATER FACILITY #3 & #4 PROFILE

RICHARD E. DANIELAND
STATE OF WASHINGTON
REGISTERED PROFESSIONAL ENGINEER
EXPIRES: MARCH 17, 2005

CALL 48 HOURS BEFORE YOU DIG
1-800-553-4344
"It's the Law"
NORTHWEST UTILITIES NOTIFICATION CENTER

DESIGNED	SWG		
DRAWN	RAD		
CRP	2077_9	HOR.	1"=20'
VERT.	1"=5'		
DATE	OCT 2004		
DWG:	SWF3b		
SHEET		OF	

E:\projects\2077_9\CAD\Final\dwg\Prod\20779_SWF3b.dwg, 10/04/04 03:00:35 PM, rad

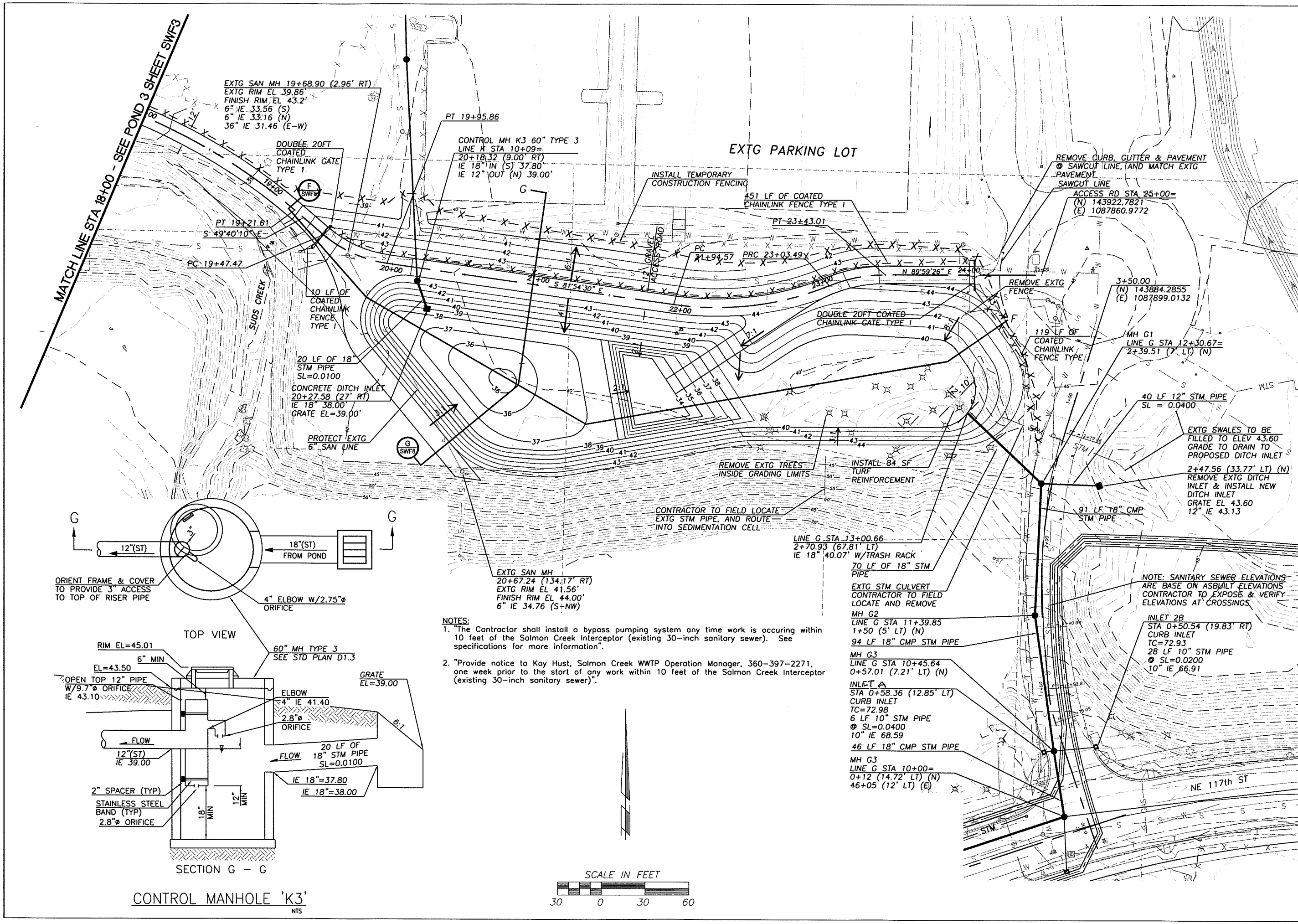

NOTES:

1. "The Contractor shall install a bypass pumping system any time work is occuring within 10 feet of the Salmon Creek Interceptor (existing 30-inch sanitary sewer). See specifications for more information".
2. "Provide notice to Kay Hust, Salmon Creek WWTP Operation Manager, 360-397-2271, one week prior to the start of any work within 10 feet of the Salmon Creek Interceptor (existing 30-inch sanitary sewer)".

DESIGNED	SWG
DRAWN	RAD
CRP	2077_9
HOR.	1"=30'
VERT.	NA
DATE	OCT 2004
DWG:	SWF4
SHEET	OF

CALL 48 HOURS BEFORE YOU DIG 1-800-553-4344 "It's the Law" NORTHWEST UTILITIES NOTIFICATION CENTER

RICHARD D. DARLAND STATE OF WASHINGTON REGISTERED PROFESSIONAL ENGINEER
EXPIRES: MARCH 17, 2005

DESIGN & ENGINEERING DIVISION
DESIGN SECTION

NW 119TH / 117TH STREET
STORMWATER FACILITY #4

proud past, promising future
CLARK COUNTY WASHINGTON

E:\projects\2077_9\CAD\Final\dwg\Prod\20779_SWF4.dwg, 10/04/04 03:14:44 PM, rad

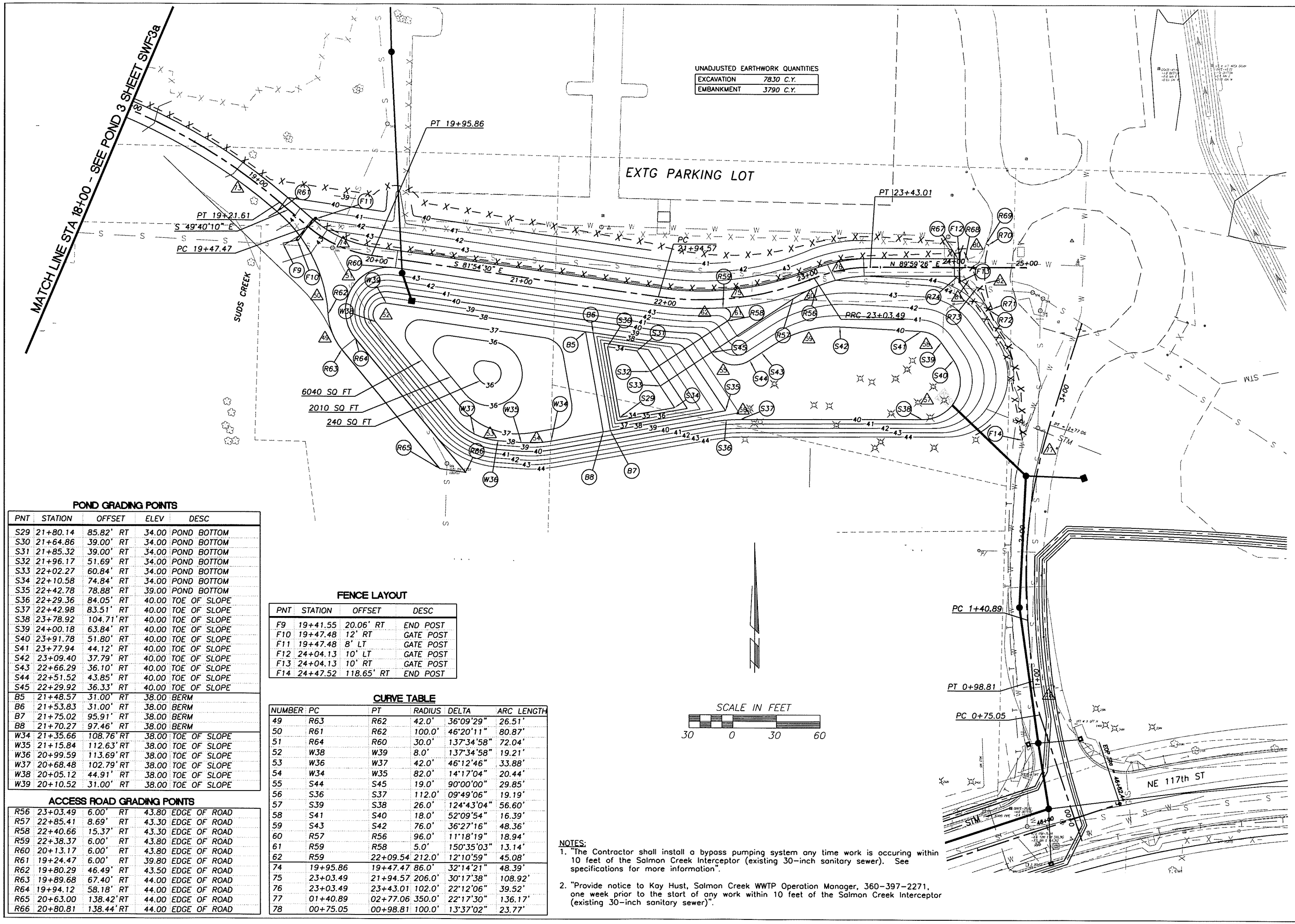

UNADJUSTED EARTHWORK QUANTITIES

EXCAVATION	7830 C.Y.
EMBANKMENT	3790 C.Y.

POND GRADING POINTS

PNT	STATION	OFFSET	ELEV	DESC
S29	21+80.14	85.82' RT	34.00	POND BOTTOM
S30	21+64.86	39.00' RT	34.00	POND BOTTOM
S31	21+85.32	39.00' RT	34.00	POND BOTTOM
S32	21+96.17	51.69' RT	34.00	POND BOTTOM
S33	22+02.27	60.84' RT	34.00	POND BOTTOM
S34	22+10.58	74.84' RT	34.00	POND BOTTOM
S35	22+42.78	78.88' RT	39.00	POND BOTTOM
S36	22+29.36	84.05' RT	40.00	TOE OF SLOPE
S37	22+42.98	83.51' RT	40.00	TOE OF SLOPE
S38	23+78.92	104.71' RT	40.00	TOE OF SLOPE
S39	24+00.18	63.84' RT	40.00	TOE OF SLOPE
S40	23+91.78	51.80' RT	40.00	TOE OF SLOPE
S41	23+77.94	44.12' RT	40.00	TOE OF SLOPE
S42	23+09.40	37.79' RT	40.00	TOE OF SLOPE
S43	22+66.29	36.10' RT	40.00	TOE OF SLOPE
S44	22+51.52	43.85' RT	40.00	TOE OF SLOPE
S45	22+29.92	36.33' RT	40.00	TOE OF SLOPE
B5	21+48.57	31.00' RT	38.00	BERM
B6	21+53.83	31.00' RT	38.00	BERM
B7	21+75.02	95.91' RT	38.00	BERM
B8	21+70.27	97.46' RT	38.00	BERM
W34	21+35.66	108.76' RT	38.00	TOE OF SLOPE
W35	21+15.84	112.63' RT	38.00	TOE OF SLOPE
W36	20+99.59	113.69' RT	38.00	TOE OF SLOPE
W37	20+68.48	102.79' RT	38.00	TOE OF SLOPE
W38	20+05.12	44.91' RT	38.00	TOE OF SLOPE
W39	20+10.52	31.00' RT	38.00	TOE OF SLOPE

ACCESS ROAD GRADING POINTS

R56	23+03.49	6.00' RT	43.80	EDGE OF ROAD
R57	22+85.41	8.69' RT	43.30	EDGE OF ROAD
R58	22+40.66	15.37' RT	43.30	EDGE OF ROAD
R59	22+38.37	6.00' RT	43.80	EDGE OF ROAD
R60	20+13.17	6.00' RT	43.80	EDGE OF ROAD
R61	19+24.47	6.00' RT	39.80	EDGE OF ROAD
R62	19+80.29	46.49' RT	43.50	EDGE OF ROAD
R63	19+89.68	67.40' RT	44.00	EDGE OF ROAD
R64	19+94.12	58.18' RT	44.00	EDGE OF ROAD
R65	20+63.00	138.42' RT	44.00	EDGE OF ROAD
R66	20+80.81	138.44' RT	44.00	EDGE OF ROAD

FENCE LAYOUT

PNT	STATION	OFFSET	DESC
F9	19+41.55	20.06' RT	END POST
F10	19+47.48	12' RT	GATE POST
F11	19+47.48	8' LT	GATE POST
F12	24+04.13	10' LT	GATE POST
F13	24+04.13	10' RT	GATE POST
F14	24+47.52	118.65' RT	END POST

CURVE TABLE

NUMBER	PC	PT	RADIUS	DELTA	ARC LENGTH
49	R63	R62	42.0'	36°09'29"	26.51'
50	R61	R62	100.0'	46°20'11"	80.87'
51	R64	R60	30.0'	137°34'58"	72.04'
52	W38	W39	8.0'	137°34'58"	19.21'
53	W36	W37	42.0'	46°12'46"	33.88'
54	W34	W35	82.0'	14°17'04"	20.44'
55	S44	S45	19.0'	90°00'00"	29.85'
56	S36	S37	112.0'	09°49'06"	19.19'
57	S39	S38	26.0'	124°43'04"	56.60'
58	S41	S40	18.0'	52°09'54"	16.39'
59	S43	S42	76.0'	36°27'16"	48.36'
60	R57	R56	96.0'	11°18'19"	18.94'
61	R59	R58	5.0'	150°35'03"	13.14'
62	R59	22+09.54	212.0'	12°10'59"	45.08'
74	19+95.86	19+47.47	86.0'	32°14'21"	48.39'
75	23+03.49	21+94.57	206.0'	30°17'38"	108.92'
76	23+03.49	23+43.01	102.0'	22°12'06"	39.52'
77	01+40.89	02+77.06	350.0'	22°17'30"	136.17'
78	00+75.05	00+98.81	100.0'	13°37'02"	23.77'

NOTES:

1. "The Contractor shall install a bypass pumping system any time work is occuring within 10 feet of the Salmon Creek Interceptor (existing 30-inch sanitary sewer). See specifications for more information".
2. "Provide notice to Kay Hust, Salmon Creek WWTP Operation Manager, 360-397-2271, one week prior to the start of any work within 10 feet of the Salmon Creek Interceptor (existing 30-inch sanitary sewer)".

DESIGNED	SWG
DRAWN	RAD
CRP	2077_9
HOR.	1"=30'
VERT.	NA
DATE	OCT 2004
DWG:	SWF4a
SHEET	OF

CALL 48 HOURS BEFORE YOU DIG 1-800-553-4344 "It's the Law" NORTHWEST UTILITIES NOTIFICATION CENTER

RICHARD E. DARLAND STATE OF WASHINGTON REGISTERED PROFESSIONAL ENGINEER
EXPIRES: MARCH 17, 2005

DESIGN & ENGINEERING DIVISION
DESIGN SECTION

NW 119TH / 117TH STREET
STORMWATER FACILITY #4 STAKING PLAN

proud past, promising future
CLARK COUNTY WASHINGTON

E:\projects\2077_9\CAD\Final\dwg\Prod\20779_SWF4a.dwg, 10/04/04 02:56:03 PM, rad

NOTES:
1. "The Contractor shall install a bypass pumping system any time work is occuring within 10 feet of the Salmon Creek Interceptor (existing 30-inch sanitary sewer). See specifications for more information".
2. "Provide notice to Kay Hust, Salmon Creek WWTP Operation Manager, 360-397-2271, one week prior to the start of any work within 10 feet of the Salmon Creek Interceptor (existing 30-inch sanitary sewer)".

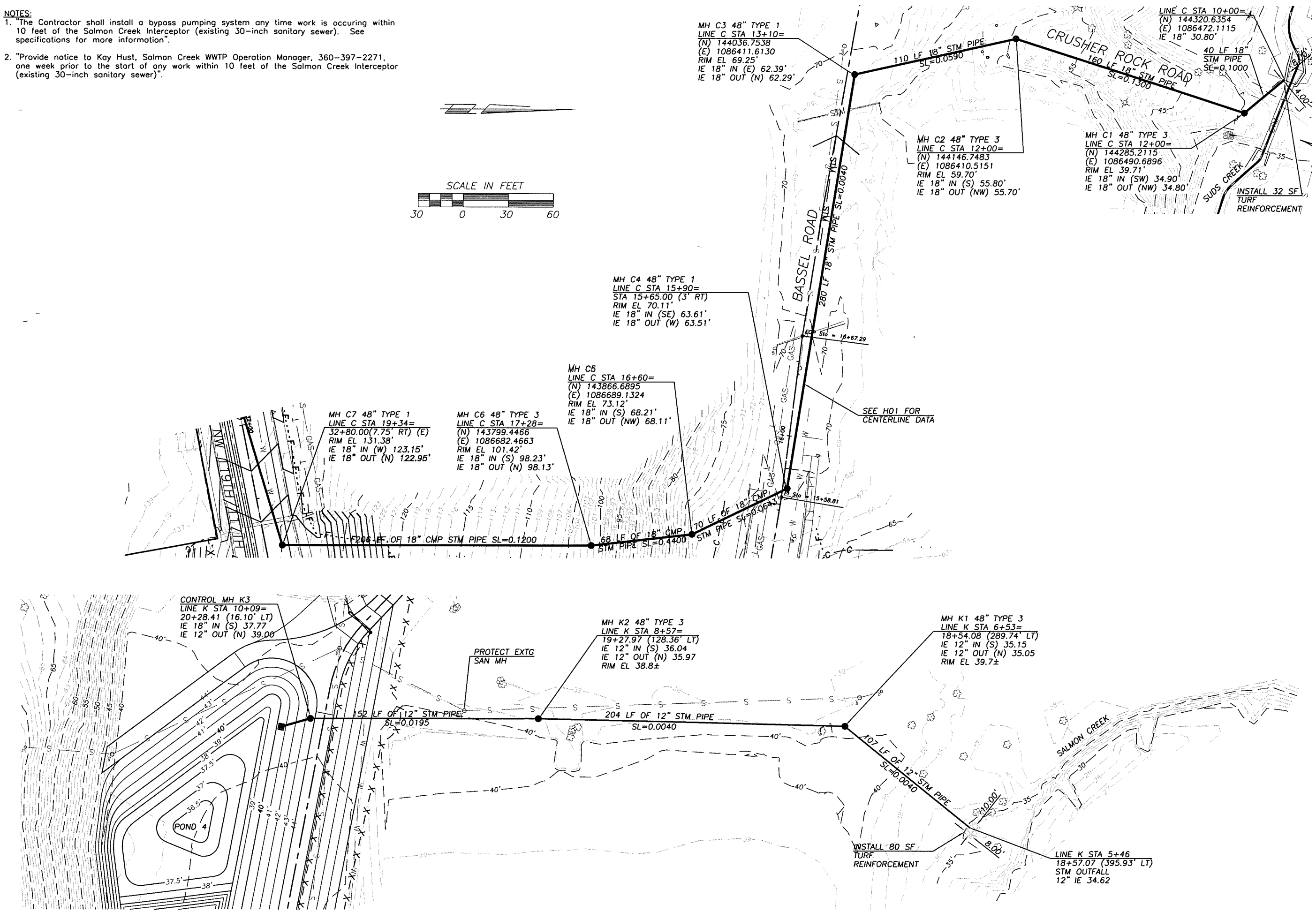

DESIGNED	SWG
DRAWN	RAD
CRP	2077_9
HOR.	1"=30'
VERT.	NA
DATE	OCT 2004
DWG:	SWF5
SHEET	OF

CALL 48 HOURS BEFORE YOU DIG
1-800-553-4344
"It's the Law"
NORTHWEST UTILITIES NOTIFICATION CENTER

RICHARD E. DARLAND
STATE OF WASHINGTON
REGISTERED PROFESSIONAL ENGINEER
EXPIRES: MARCH 17, 2005

DESIGN & ENGINEERING DIVISION
DESIGN SECTION

NW 119TH / 117TH STREET
STORMLINE 'C' & 'K'

proud past, promising future
CLARK COUNTY
WASHINGTON

E:\projects\2077_9\CAD\Final\dwg\Prod\20779_SWF5.dwg, 10/04/04 03:43:34 PM, rad

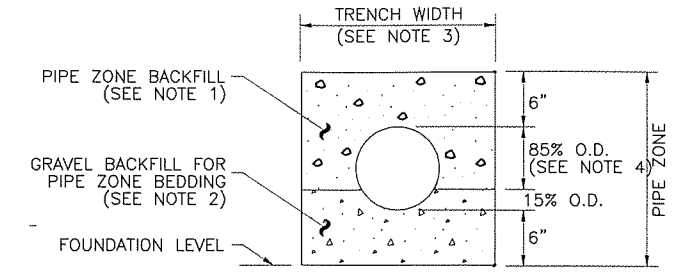

CONCRETE AND DUCTILE IRON PIPE

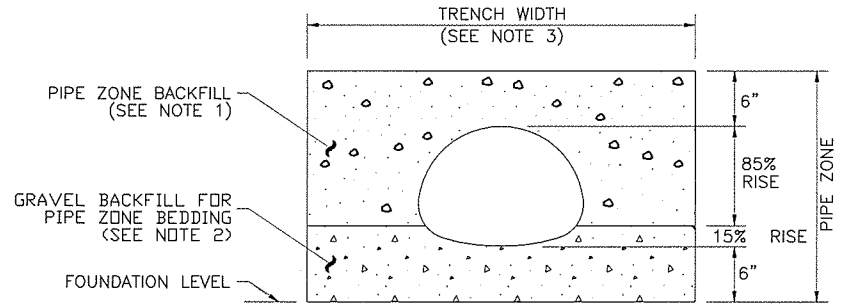

PIPE ARCHES

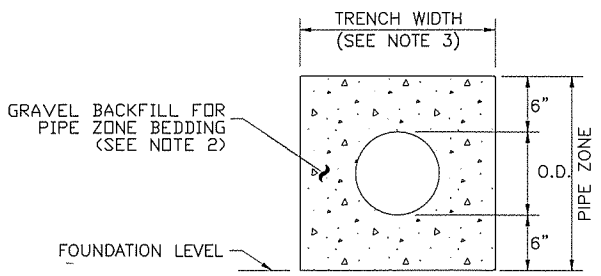

THERMOPLASTIC PIPE

CLEARANCE BETWEEN PIPES FOR MULTIPLE INSTALLATIONS		
PIPE	SIZE	MINIMUM DISTANCE BETWEEN BARRELS
CIRCULAR PIPE (DIAMETER)	12" to 24" 30" to 96" 102" to 180"	12" DIAM. /2 48"
PIPE ARCH METAL ONLY (SPAN)	18" to 36" 43" to 142" 148" to 200"	12" SPAN /3 48"

PIPE ZONE BEDDING AND BACKFILL

07/31/2001

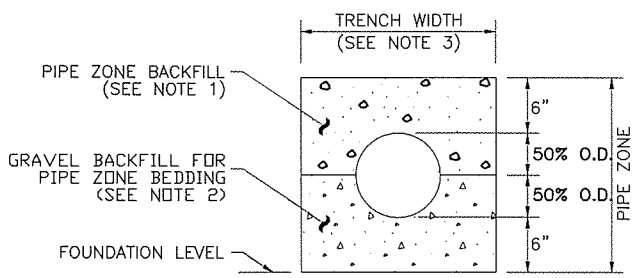

METAL PIPE

NOTES

1. See Standard Specifications Section 7-08.3(3) for Pipe Zone Backfill.
2. See Standard Specifications Section 9-03.12(3) for Gravel Backfill for Pipe Zone Bedding
3. See Standard Specifications Section 2-09.4 for Measurement of Trench Width.
4. For sanitary sewer installation, concrete pipe shall be bedded to spring line.

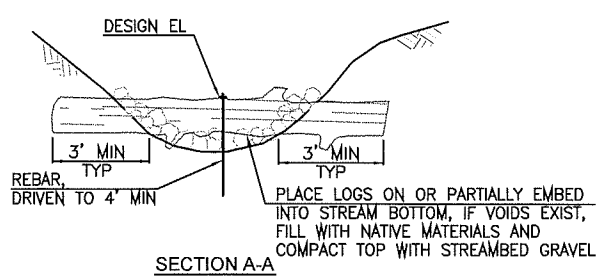

SECTION A-A

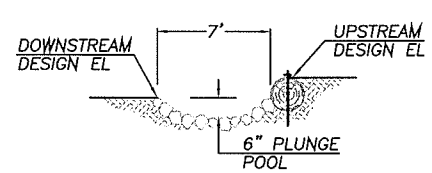

SECTION B-B

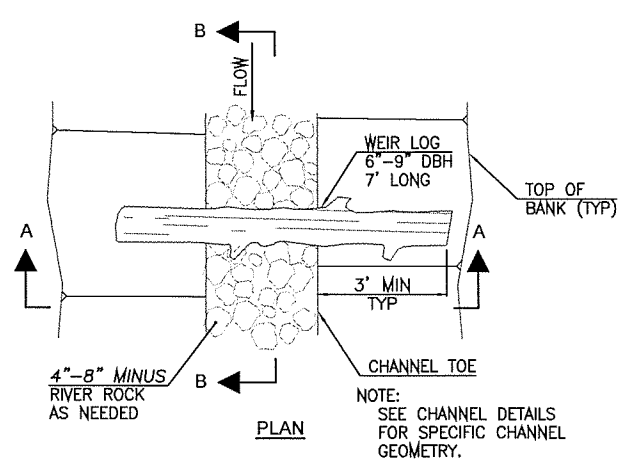

PLAN

LOG WEIR COMPLEX

NTS

GENERAL NOTES

1.) STORMFILTER BY STORMWATER MANAGEMENT, PORTLAND, OREGON (503-240-3393).
2.) ALL STORMFILTERS REQUIRE REGULAR MAINTENANCE. REFER TO OPERATION AND MAINTENANCE GUIDELINES FOR DETAILS.
3.) PRECAST CONCRETE VAULT TO BE CONSTRUCTED IN ACCORDANCE WITH ASTM C858.
4.) INLET AND OUTLET PIPING TO BE SPECIFIED BY ENGINEER AND PROVIDED BY CONTRACTOR.
5.) ANTI-FLOATATION BALLAST TO BE SPECIFIED BY ENGINEER. BALLAST TO BE SET ALONG ENTIRE LENGTH OF BOTH SIDES OF VAULT. BALLAST MATERIALS TO BE PROVIDED BY CONTRACTOR.
6.) PRECAST STORMFILTER EQUIPPED WITH KNOCKOUTS AT ALT. INLET/OUTLET LOCATIONS. CORINGS AVAILABLE WHEN SPECIFIED.
7.) DETAIL REFLECTS DESIGN INTENT ONLY. ACTUAL VAULT DIMENSIONS AND CONFIGURATION WILL BE SHOWN ON THE PRODUCTION SHOP DRAWING.

6' X 12' PRECAST STORMFILTER® DATA

DESIGN WATER QUALITY FLOW (cfs)				
PEAK FLOW (cfs)				
RETURN PERIOD OF PEAK FLOW (yrs)				
# OF CARTRIDGES REQUIRED				
MEDIA TYPE				
(In-Out)=2.3' Min.	I.E.	MATERIAL	DIAMETER	
INLET PIPE #1				
INLET PIPE #2				
OUTLET PIPE				

RIM ELEVATION(S):

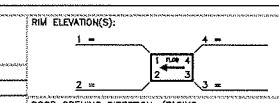

DOOR OPENING DIRECTION: (FACING DOWNSTREAM – SEE FIGURE ABOVE)
EXAMPLE: '2 TO 1' OR '1 TO 2.'

ADJUSTABLE LID		YES/NO
LADDER		YES/NO
ANTI-FLOATATION BALLAST (USE N/A IF NOT REQUIRED)	WIDTH	HEIGHT

NOTES/SPECIAL REQUIREMENTS:

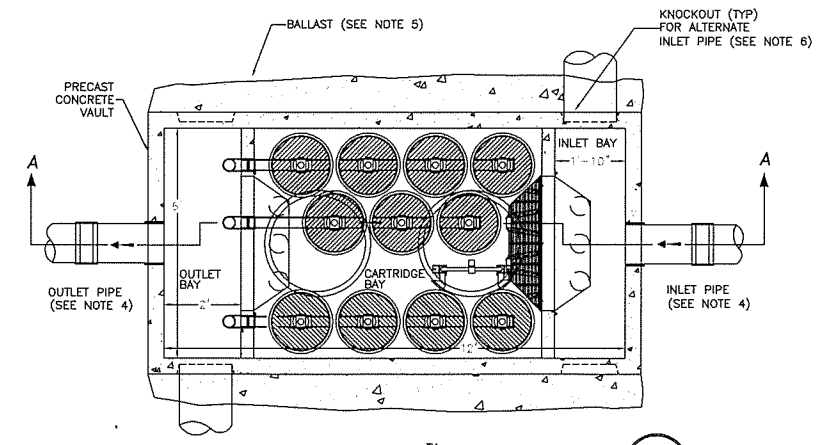

6'x12' PRECAST STORMFILTER™– PLAN VIEW (1/1)

SCALE: N.T.S

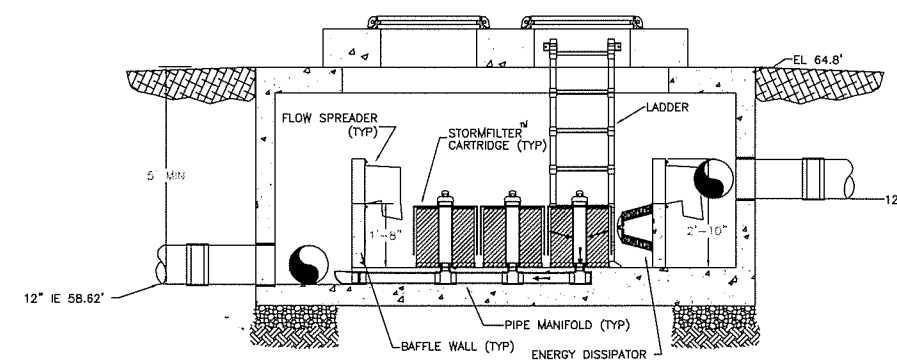

6'x12' PRECAST STORMFILTER™– SECTION A–A (A–A / 1)

SCALE: N.T.S

The STORMWATER MANAGEMENT StormFilter® U.S. PATENT No. 5,322,629, No. 5,624,576, No. 5,707,527 AND OTHER U.S. AND FOREIGN PATENTS PENDING

SHEET	DESIGNED BY: RK	CHECKED BY:	CHECK DATE:	6'X12' PRECAST STORMFILTER PLAN AND SECTION VIEW STANDARD DETAIL	STORMWATER MANAGEMENT INC
1/1	DRAWN BY: ARG	APPROVED BY:	APPR. DATE:		
1	04/19/01 ARG DRAWING UPDATE			SCALE: AS SHOWN / PROJECT NO. / DRAWING FILE NAME: 612.DWG	

LAST EDIT: ARG PLOT DATE: 04/19/01

DESIGNED SWC
DRAWN RAD
CRP 2077_9
HOR. NA
VERT. NA
DATE OCT 2004
DWG: SWF6
SHEET OF

CALL 48 HOURS BEFORE YOU DIG 1-800-553-4344 "It's the Law" NORTHWEST UTILITIES NOTIFICATION CENTER

R. E. DARLAND STATE OF WASHINGTON 22481 REGISTERED PROFESSIONAL ENGINEER
EXPIRES: MARCH 17, 2005

DESIGN & ENGINEERING DIVISION
DESIGN SECTION

NW 119TH / 117TH STREET
DETAILS

proud past, promising future
CLARK COUNTY WASHINGTON

E:\projects\2077_9\CAD\Final\dwg\Prod\20779_SWF6.dwg, 10/04/04 03:45:06 PM, rad

LINE TABLE		
LINE	LENGTH	BEARING
L1	16.41	S55°02'44"W
L2	38.66	S59°46'41"E
L3	19.97	S15°25'52"E
L4	46.55	S67°38'13"E
L5	8.16	S28°27'51"E
L6	62.24	S49°25'11"E
L7	26.19	S15°39'02"E
L8	5.22	S56°37'03"E
L9	24.00	S37°50'42"E
L10	2.82	S66°29'17"E
L11	1.63	S30°52'46"E
L12	46.26	S58°59'53"E
L13	5.09	N74°43'57"E
L14	64.95	S56°06'21"E
L15	23.25	S29°30'31"E
L16	9.06	S61°02'30"E
L17	2.49	S23°21'14"E
L18	11.77	S89°58'39"E
L19	92.50	S46°23'41"E
L20	6.19	N80°20'00"E
L21	25.30	S26°14'43"E
L22	6.83	S87°13'09"E
L23	67.68	S53°24'07"E
L24	21.28	S32°08'18"E
L25	14.20	N62°01'20"E
L26	28.98	S84°46'33"E

CURVE TABLE			
CURVE	RADIUS	DELTA	LENGTH
C1	60	114°49'26"	120.24
C2	150	44°20'49"	116.10
C3	60	52°12'21"	54.67
C4	10	39°10'23"	6.84
C5	80	20°57'21"	29.26
C6	20	33°46'09"	11.79
C7	10	40°58'01"	7.15
C8	40	18°46'21"	13.11
C9	20	28°38'36"	10.00
C10	10	35°36'31"	6.21
C11	10	28°07'07"	4.91
C12	30	46°16'09"	24.23
C13	10	49°09'42"	8.58
C14	10	26°35'50"	4.64
C15	20	31°31'59"	11.01
C16	20	37°41'16"	13.16
C17	20	66°37'25"	23.26
C18	20	43°34'58"	15.21
C19	30	53°16'19"	27.89
C20	10	73°25'17"	12.81
C21	20	60°58'26"	21.28
C22	10	33°49'02"	5.90
C23	20	21°15'49"	7.42
C24	15	85°50'22"	22.47
C25	20	33°12'07"	11.59

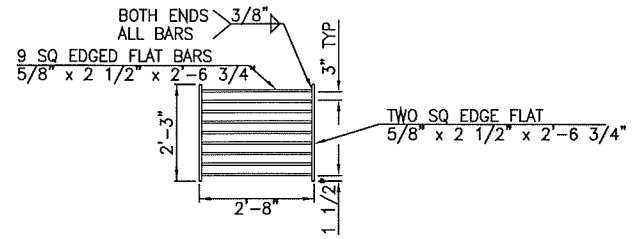

G-2 DITCH INLET GRATE (TYP)
NTS

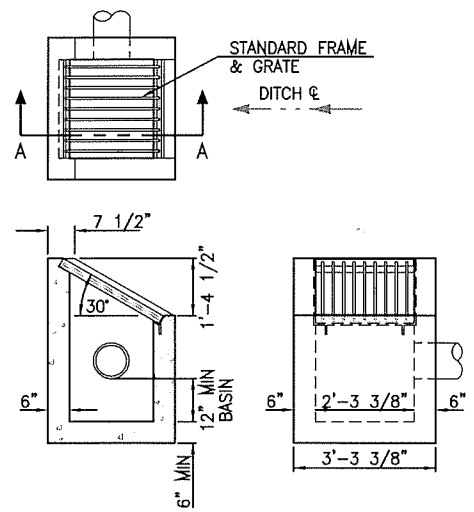

CONCRETE DITCH INLET (TYP)
NTS

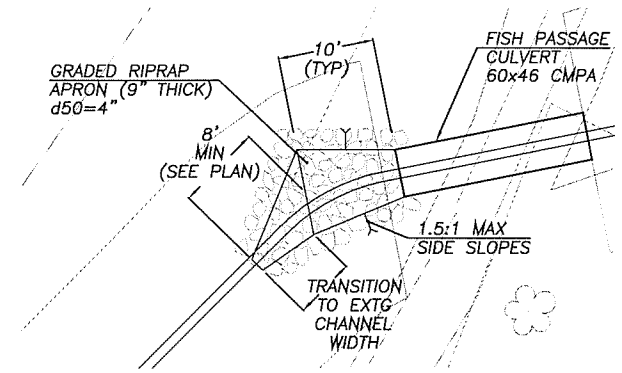

PLAN

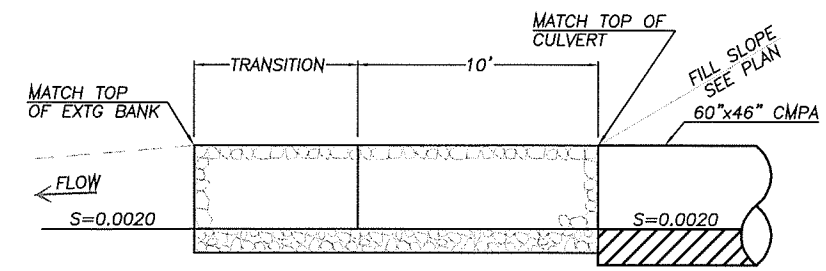

PROFILE

OUTLET PROTECTION
NTS

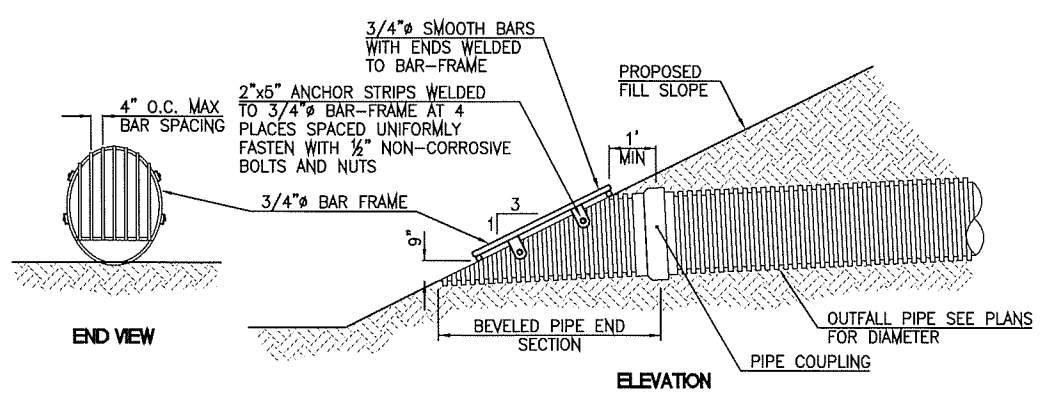

TRASH RACK
NTS

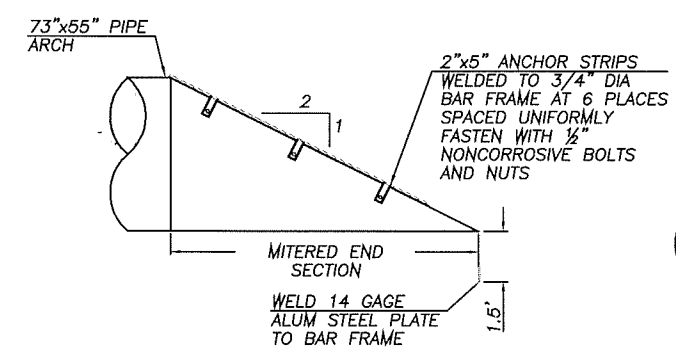

SIDE ELEVATION

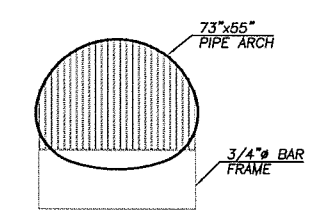

FRONT ELEVATION

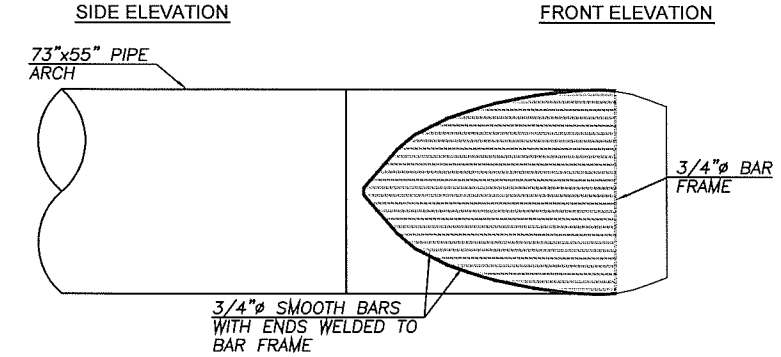

PLAN VIEW

MITERED END FOR 73"x55" PIPE ARCH
NTS

DESIGNED	SWG
DRAWN	RAD
CRP	2077_9
HOR.	NA
VERT.	NA
DATE	OCT 2004
DWG:	SWF6a
SHEET	OF

CALL 48 HOURS BEFORE YOU DIG
1-800-553-4344
"It's the Law"
NORTHWEST UTILITIES NOTIFICATION CENTER

R. DARLAND E. WASHINGTON STATE REGISTERED PROFESSIONAL ENGINEER
EXPIRES: MARCH 17, 2005

DESIGN & ENGINEERING DIVISION
DESIGN SECTION

NW 119TH / 117TH STREET
DETAILS

proud past, promising future
CLARK COUNTY WASHINGTON

E:\projects\2077_9\CAD\Final\dwg\Prod\20779_SWF6a.dwg, 10/04/04 03:45:47 PM, rad

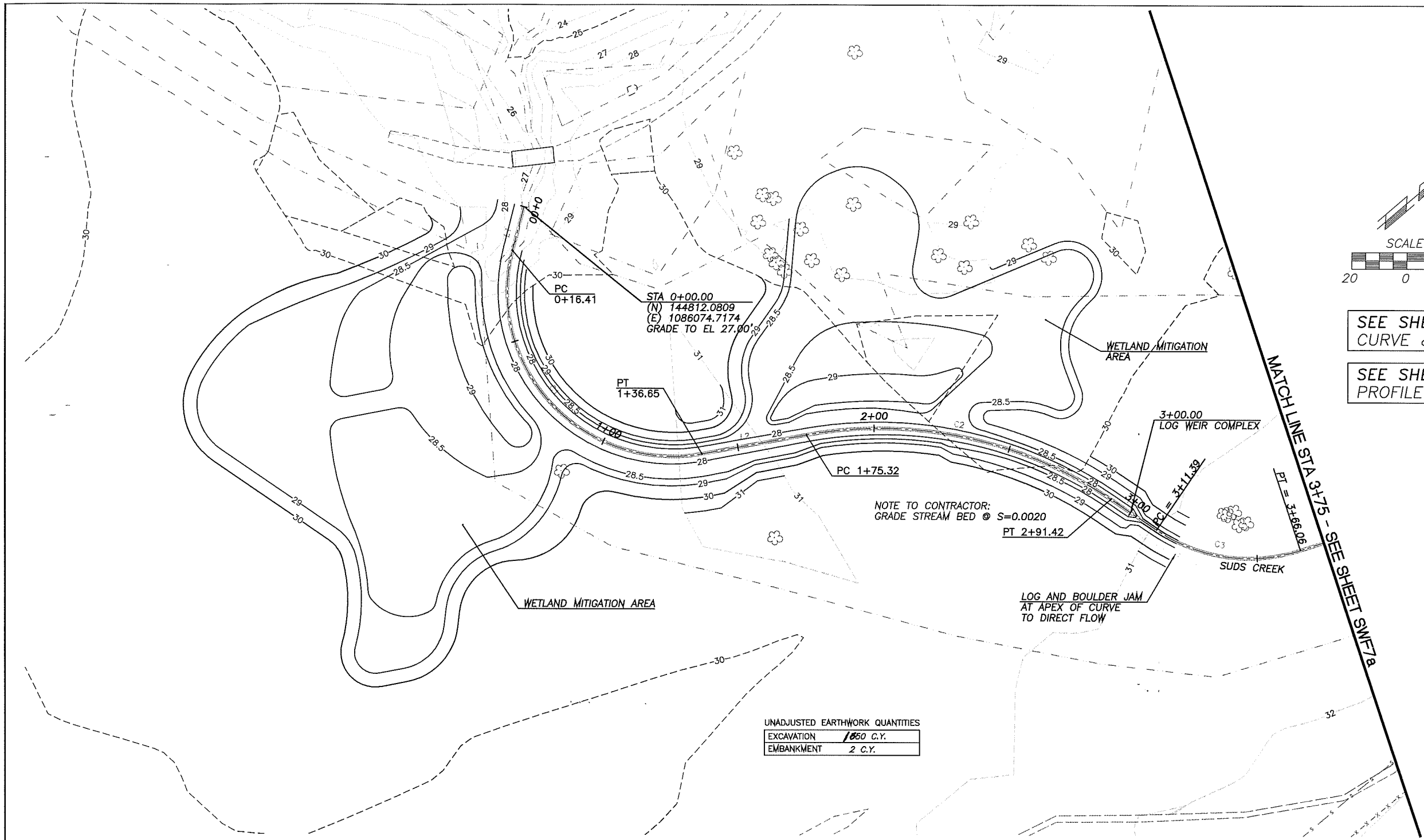

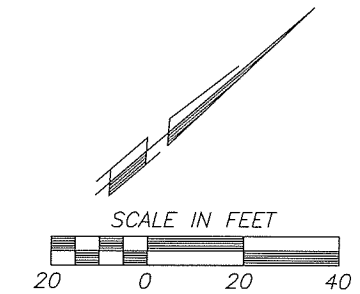

SEE SHEET SWF6a FOR
CURVE & LINE INFORMATION

SEE SHEET SWF7b FOR
PROFILE INFORMATION

UNADJUSTED EARTHWORK QUANTITIES

EXCAVATION	1850 C.Y.
EMBANKMENT	2 C.Y.

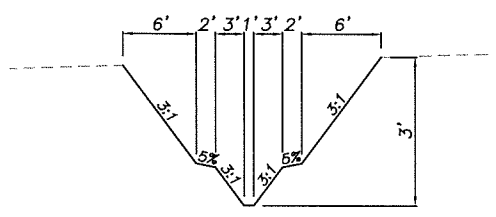

SUDS CREEK GLIDE AREA
TYPICAL SECTION

1+50 to 1+75.31, 2+28 to 3+11.38, 3+66.06 to 4+27.59, 4+56.86 to 5+30.89, 5+52.67 to 6+78.39, 8+95.10 to 9+87.60, 10+93.80 to 11+61.48

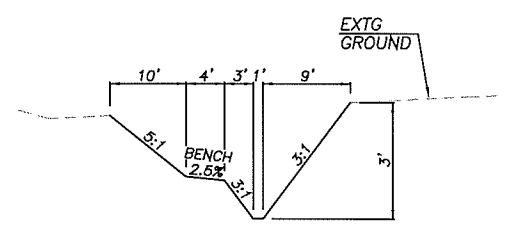

5:1 ON OUTSIDE OF CURVE
3:1 ON INSIDE OF CURVE

SUDS CREEK MEANDER AREA
TYPICAL SECTION

0+00 to 1+50, 1+75.31 to 2+28, 3+11.38 to 3+66.06, 4+27.59 to 4+56.86, 6+78.39 to 7+28.50, 7+78.50 to 8+95.10, 9+87.60 to 10+93.80, 11+61.48 to 12+47.62

NOTES:

1. "The Contractor shall install a bypass pumping system any time work is occuring within 10 feet of the Salmon Creek Interceptor (existing 30-inch sanitary sewer). See specifications for more information".
2. "Provide notice to Kay Hust, Salmon Creek WWTP Operation Manager, 360-397-2271, one week prior to the start of any work within 10 feet of the Salmon Creek Interceptor (existing 30-inch sanitary sewer)".

DESIGNED	SWG
DRAWN	RAD
CRP	2077_9
HOR.	1"=20'
VERT.	NA
DATE	OCT 2004
DWG:	SWF7
SHEET	OF

CALL 48 HOURS BEFORE YOU DIG
1-800-553-4344
"It's the Law"
NORTHWEST UTILITIES NOTIFICATION CENTER

RICHARD E. DARLAND
STATE OF WASHINGTON
REGISTERED PROFESSIONAL ENGINEER
EXPIRES: MARCH 17, 2005

DESIGN & ENGINEERING DIVISION
DESIGN SECTION

NW 119TH / 117TH STREET
SUDS CREEK ENHANCEMENTS

proud past, promising future
CLARK COUNTY
WASHINGTON

E:\projects\2077_9\CAD\Final\dwg\Prod\20779_SWF7.dwg, 10/04/04 02:42:30 PM, rad

NOTES:
1. "The Contractor shall install a bypass pumping system any time work is occuring within 10 feet of the Salmon Creek Interceptor (existing 30-inch sanitary sewer). See specifications for more information".
2. "Provide notice to Kay Hust, Salmon Creek WWTP Operation Manager, 360-397-2271, one week prior to the start of any work within 10 feet of the Salmon Creek Interceptor (existing 30-inch sanitary sewer)".

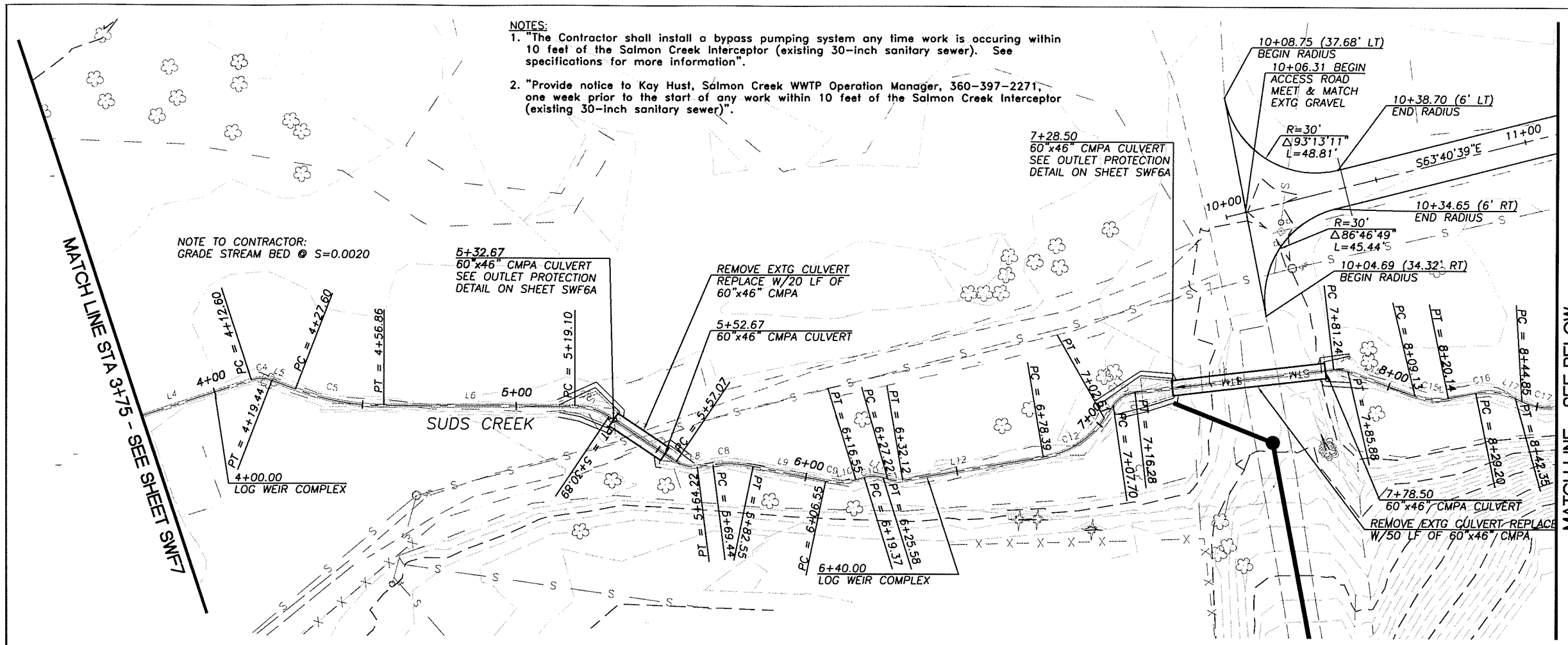

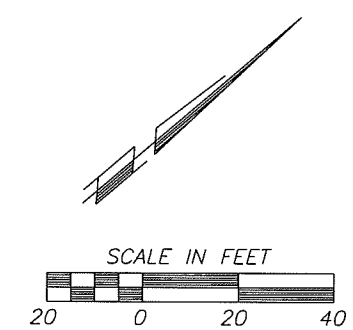

UNADJUSTED EARTHWORK QUANTITIES

EXCAVATION	1000 C.Y.
EMBANKMENT	5 C.Y.

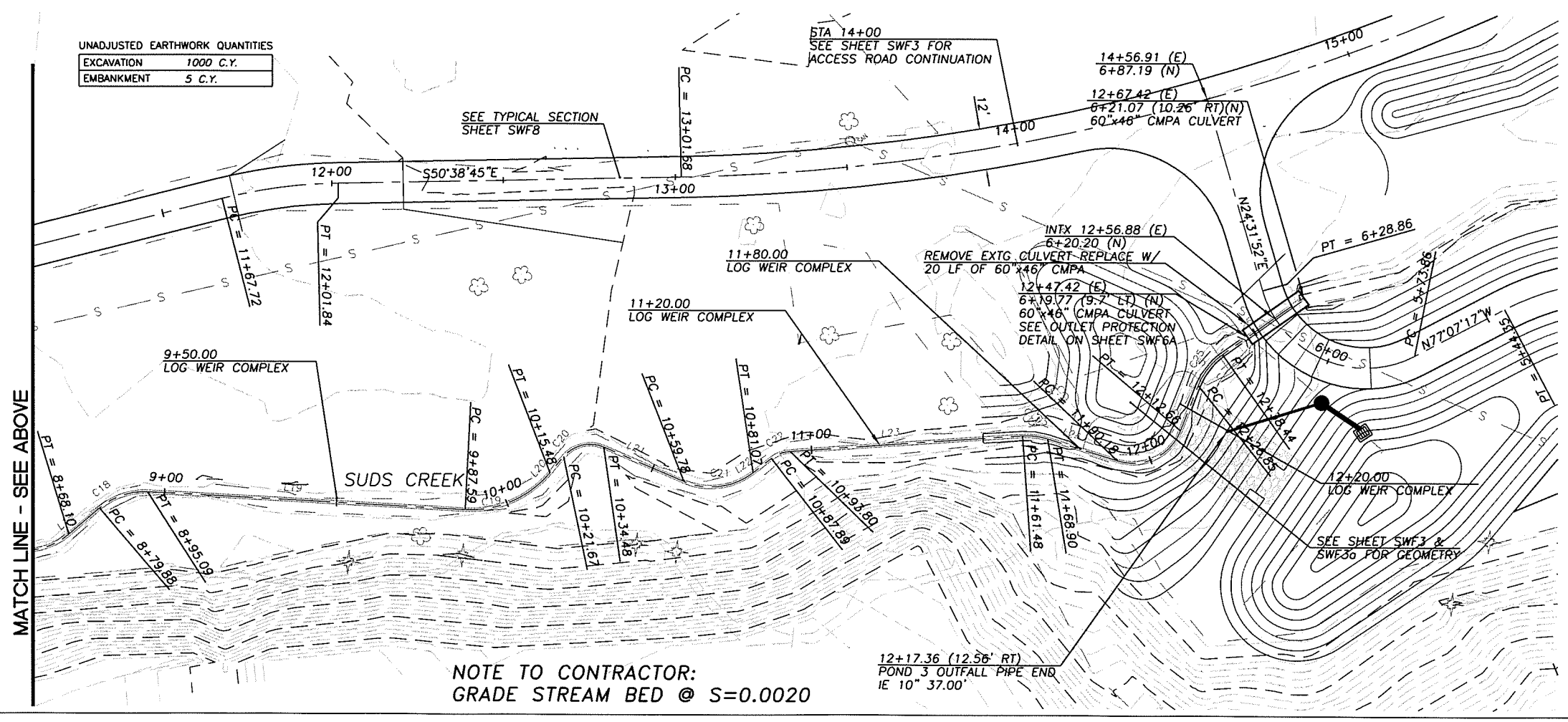

SEE SHEET SWF6a FOR CURVE & LINE INFORMATION

SEE SHEET SWF7b FOR PROFILE INFORMATION

DESIGNED	SWG
DRAWN	RAD/DPS
CRP	2077_9
HOR.	1"=20'
VERT.	N/A
DATE	OCT 2004
DWG:	SWF7a
SHEET	OF

CALL 48 HOURS BEFORE YOU DIG
1-800-553-4344
"It's the Law"
NORTHWEST UTILITIES NOTIFICATION CENTER

RICHARD E. DARLAND
STATE OF WASHINGTON
REGISTERED PROFESSIONAL ENGINEER
EXPIRES: MARCH 17, 2005

DESIGN & ENGINEERING DIVISION
DESIGN SECTION

NW 119TH / 117TH STREET
SUDS CREEK ENHANCEMENTS

proud past, promising future
CLARK COUNTY
WASHINGTON

E:\projects\2077_9\CAD\Final\dwg\Prod\20779_SWF7a.dwg, 10/04/04 02:35:18 PM, rad

NOTES:
1. "The Contractor shall install a bypass pumping system any time work is occuring within 10 feet of the Salmon Creek Interceptor (existing 30-inch sanitary sewer). See specifications for more information".
2. "Provide notice to Kay Hust, Salmon Creek WWTP Operation Manager, 360-397-2271, one week prior to the start of any work within 10 feet of the Salmon Creek Interceptor (existing 30-inch sanitary sewer)".

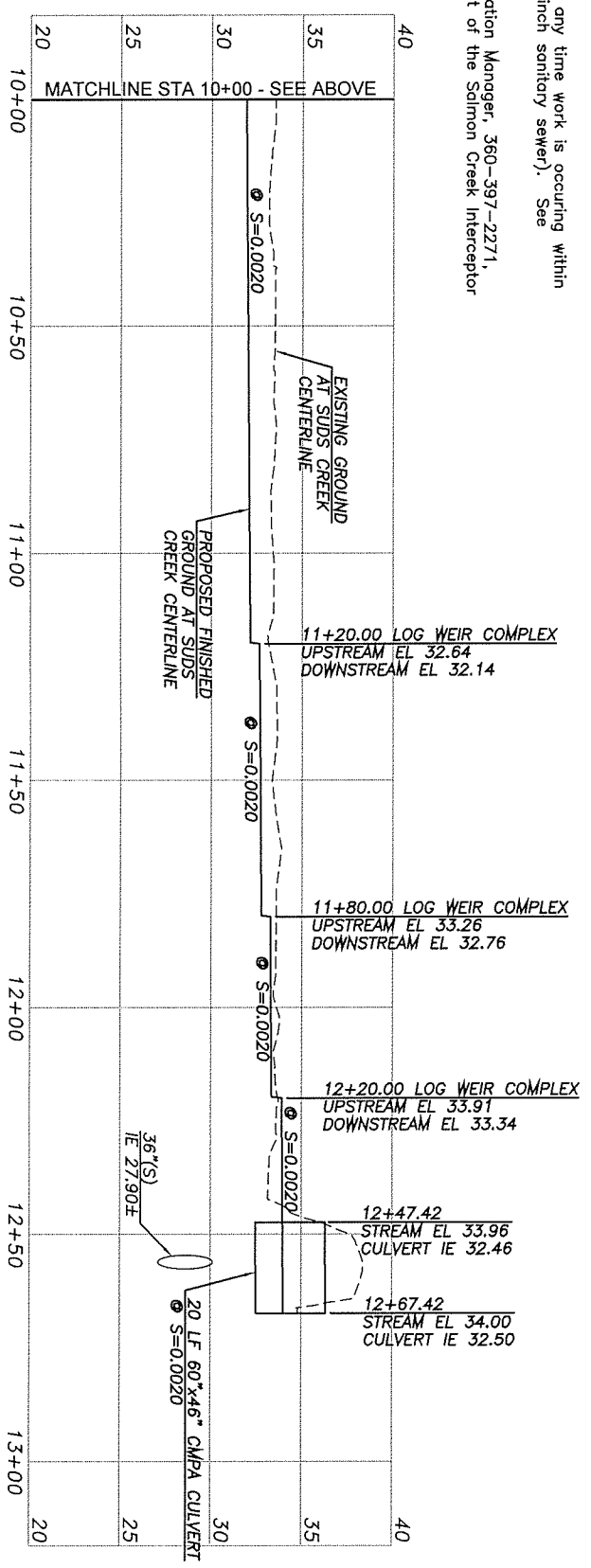

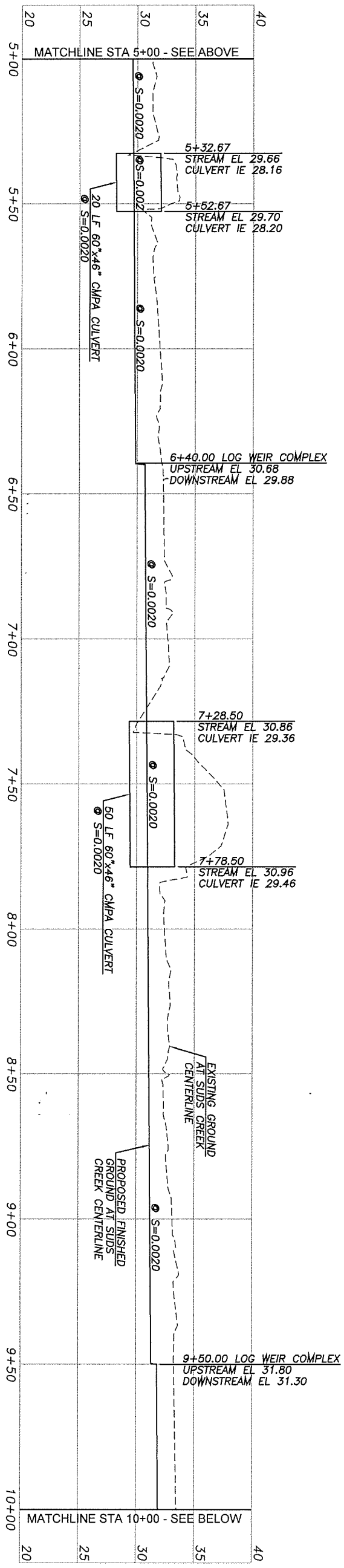

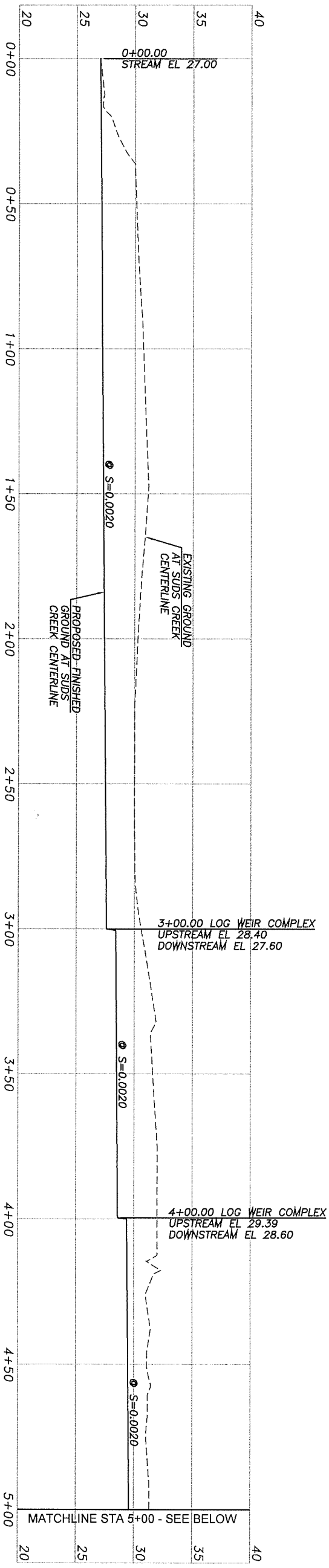

proud past, promising future
CLARK COUNTY
WASHINGTON

DESIGN & ENGINEERING DIVISION
DESIGN SECTION

NW 119TH / 117TH STREET
SUDS CREEK ENHANCEMENT PROFILE

RICHARD E. DARLAND
STATE OF WASHINGTON
33172
REGISTERED PROFESSIONAL ENGINEER
EXPIRES: MARCH 17, 2005

CALL 48 HOURS BEFORE YOU DIG
1-800-553-4344
"It's the Law"
NORTHWEST UTILITIES NOTIFICATION CENTER

DESIGNED	RED
DRAWN	DPS
CRP	2077_9
HOR.	1"=20'
VERT.	1"=5'
DATE	OCT 2004
DWG:	SWF7b
SHEET	OF

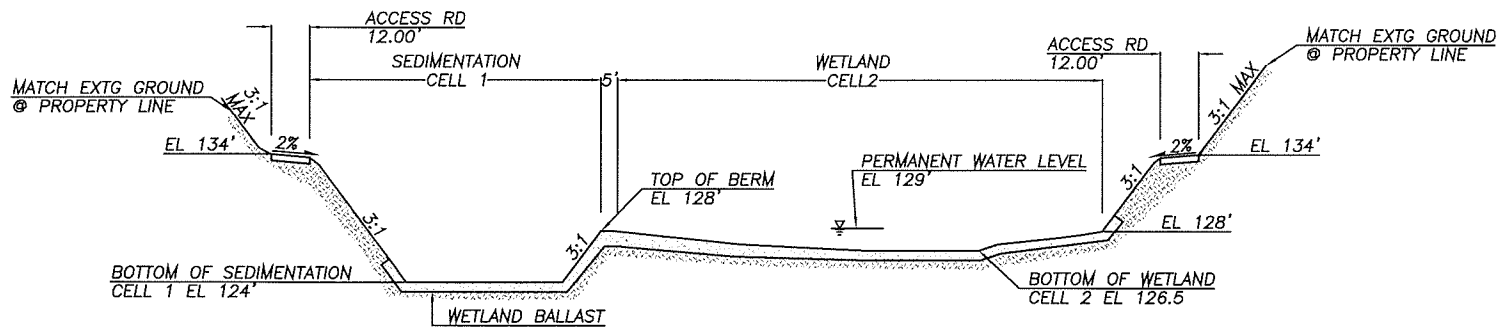

POND 1
A SECTION

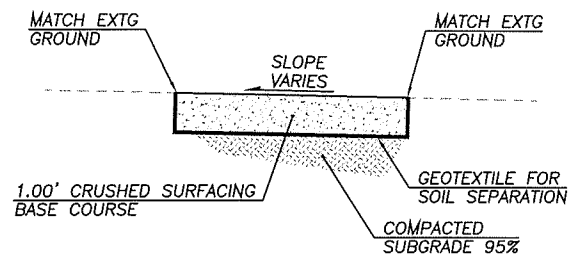

ACCESS ROAD
TYPICAL SECTION

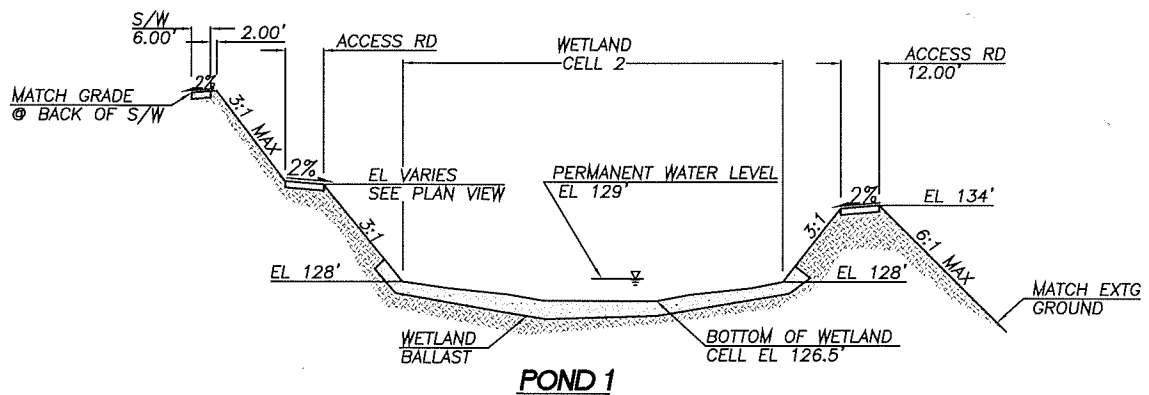

POND 1
B SECTION

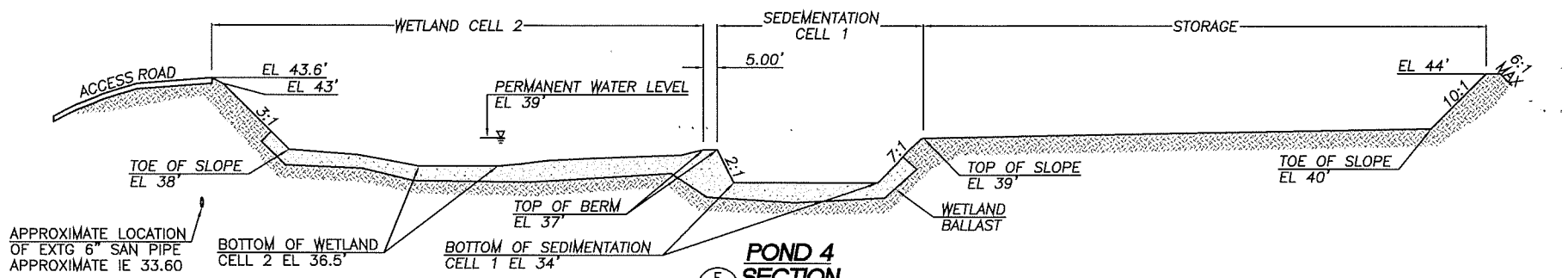

POND 4
F SECTION

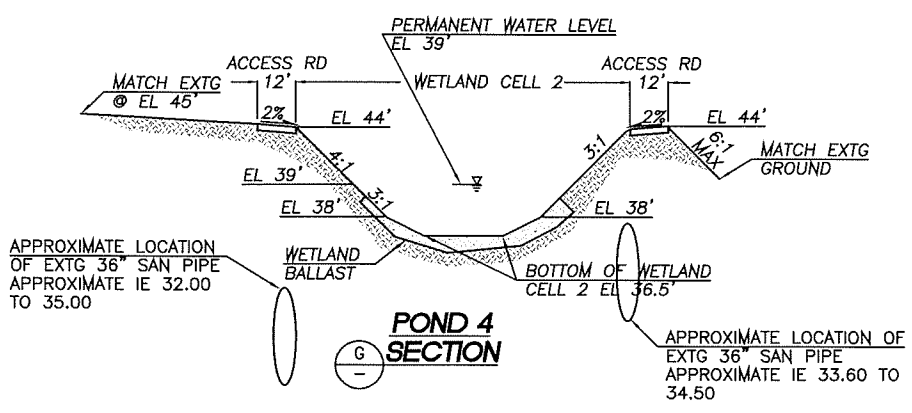

POND 4
G SECTION

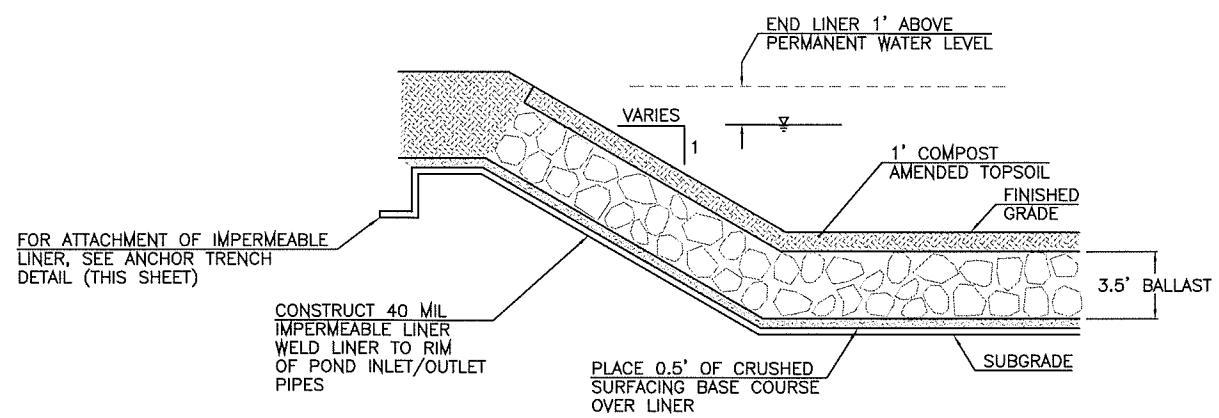

WETLAND BALLAST DETAIL

SEE SPECIAL PROVISIONS
FOR LINER SPECIFICATIONS AND INSTALLATION

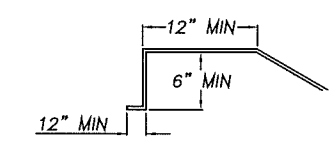

ANCHOR TRENCH DETAIL

DESIGNED SWG
DRAWN RAD
CRP 2077_9
HOR. NA
VERT. NA
DATE OCT 2004
DWG: SWF8
SHEET OF

CALL 48 HOURS BEFORE YOU DIG
1-800-553-4344
"It's the Law"
NORTHWEST UTILITIES NOTIFICATION CENTER

RICHARD E. DARLAND
STATE OF WASHINGTON
33172
REGISTERED PROFESSIONAL ENGINEER
EXPIRES: MARCH 17, 2005

DESIGN & ENGINEERING DIVISION
DESIGN SECTION

NW 119TH / 117TH STREET
STORM FACILITY #1 & #4 SECTIONS

proud past, promising future
CLARK COUNTY
WASHINGTON

E:\projects\2077_9\CAD\Final\dwg\Prod\20779_SWF8.dwg, 10/04/04 03:47:40 PM, rad

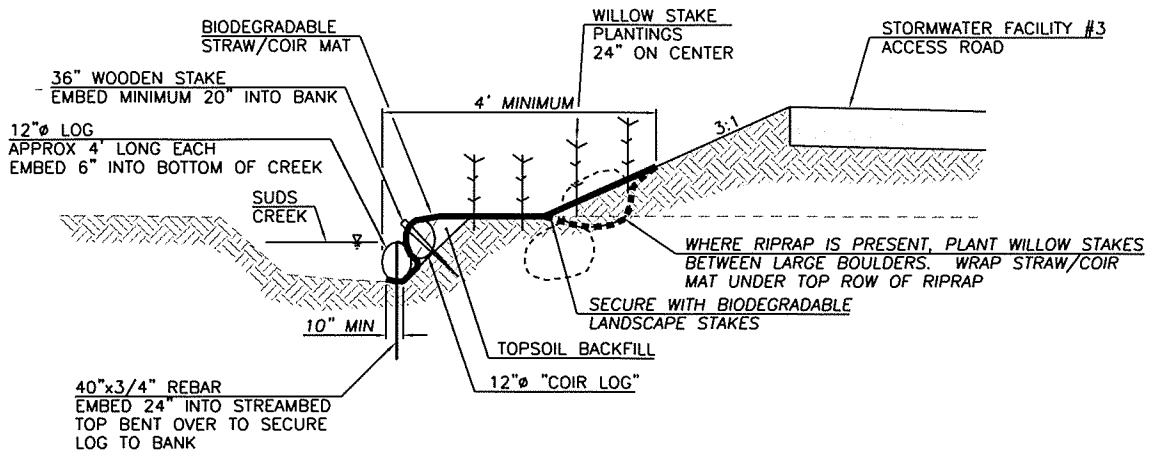

C SWF8a **BIOENGINEERED STREAMBANK PROTECTION SECTION**

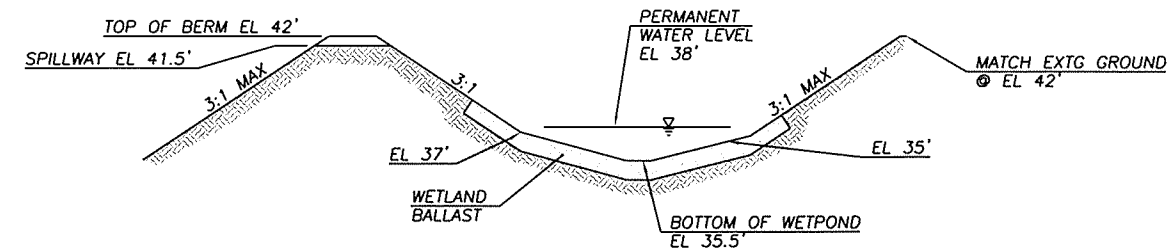

D **POND 3 SECTION**

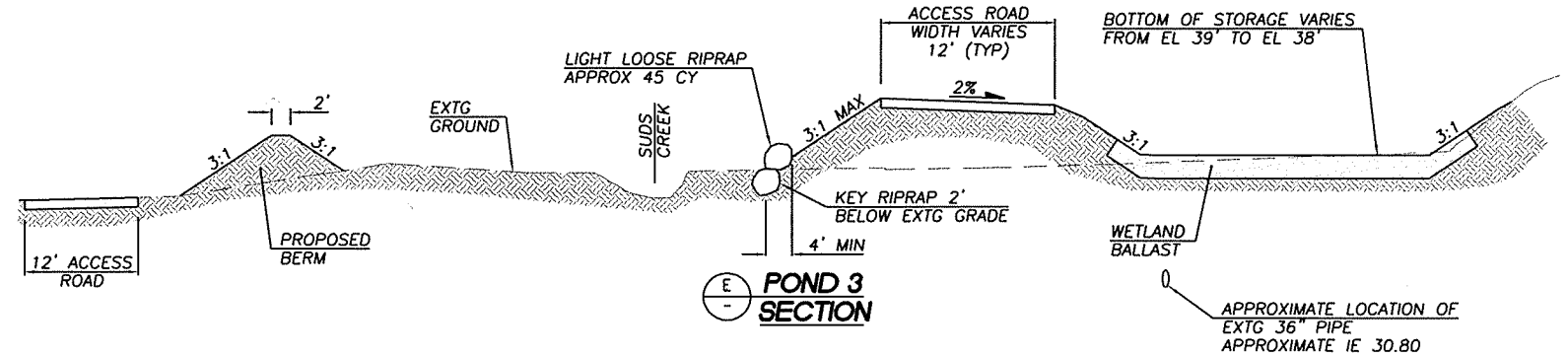

E **POND 3 SECTION**

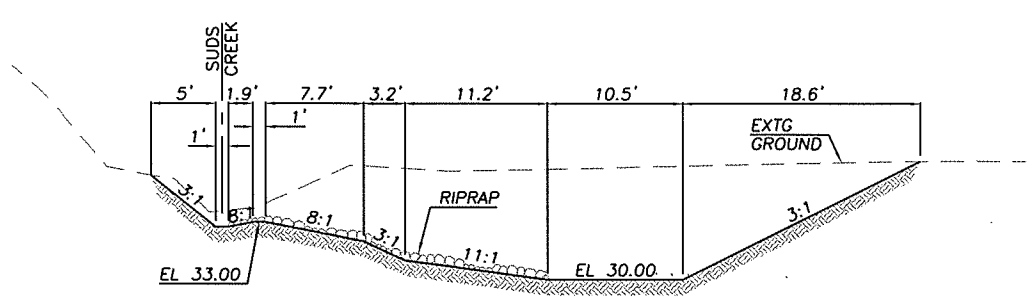

H **SEDIMENTATION AREA SECTION**

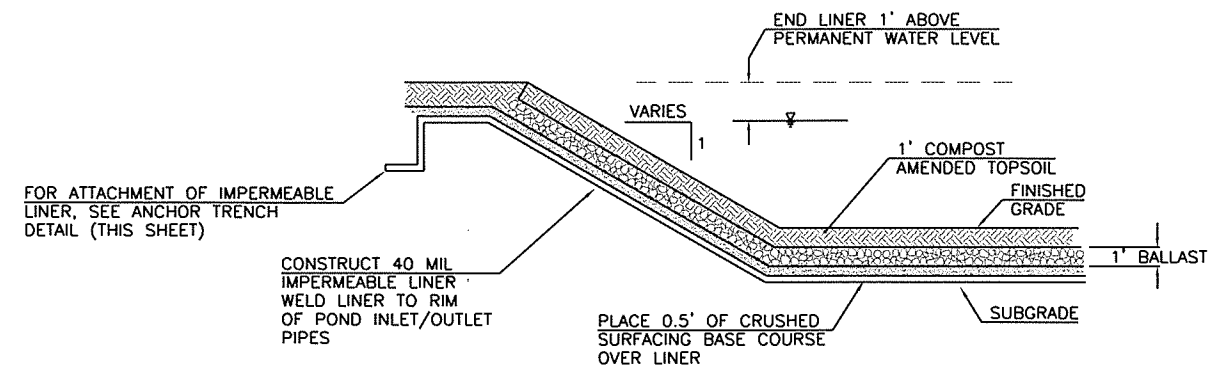

WETLAND BALLAST DETAIL

SEE SPECIAL PROVISIONS FOR LINER SPECIFICATIONS AND INSTALLATION

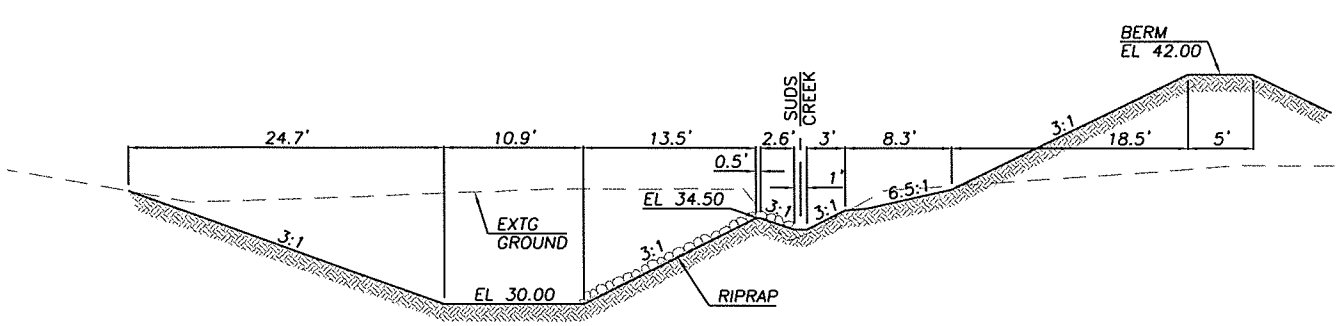

I **SEDIMENTATION AREA SECTION**

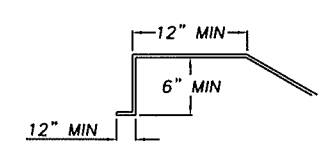

ANCHOR TRENCH DETAIL

DESIGNED	SWC
DRAWN	RAD
CRP	2077_9
HOR.	NA
VERT.	NA
DATE	OCT 2004
DWG:	SWF8a
SHEET	OF

CALL 48 HOURS BEFORE YOU DIG 1-800-553-4344 "It's the Law" NORTHWEST UTILITIES NOTIFICATION CENTER

R. D. DARLAND STATE OF WASHINGTON 22411 REGISTERED PROFESSIONAL ENGINEER EXPIRES: MARCH 17, 2005

DESIGN & ENGINEERING DIVISION
DESIGN SECTIONS

NW 119TH / 117TH STREET STORM FACILITY SECTIONS #3

proud past, promising future
CLARK COUNTY WASHINGTON

E:\projects\2077_9\CAD\Final\dwg\Prod\20779_SWF8a.dwg, 10/04/04 03:48:14 PM, rad

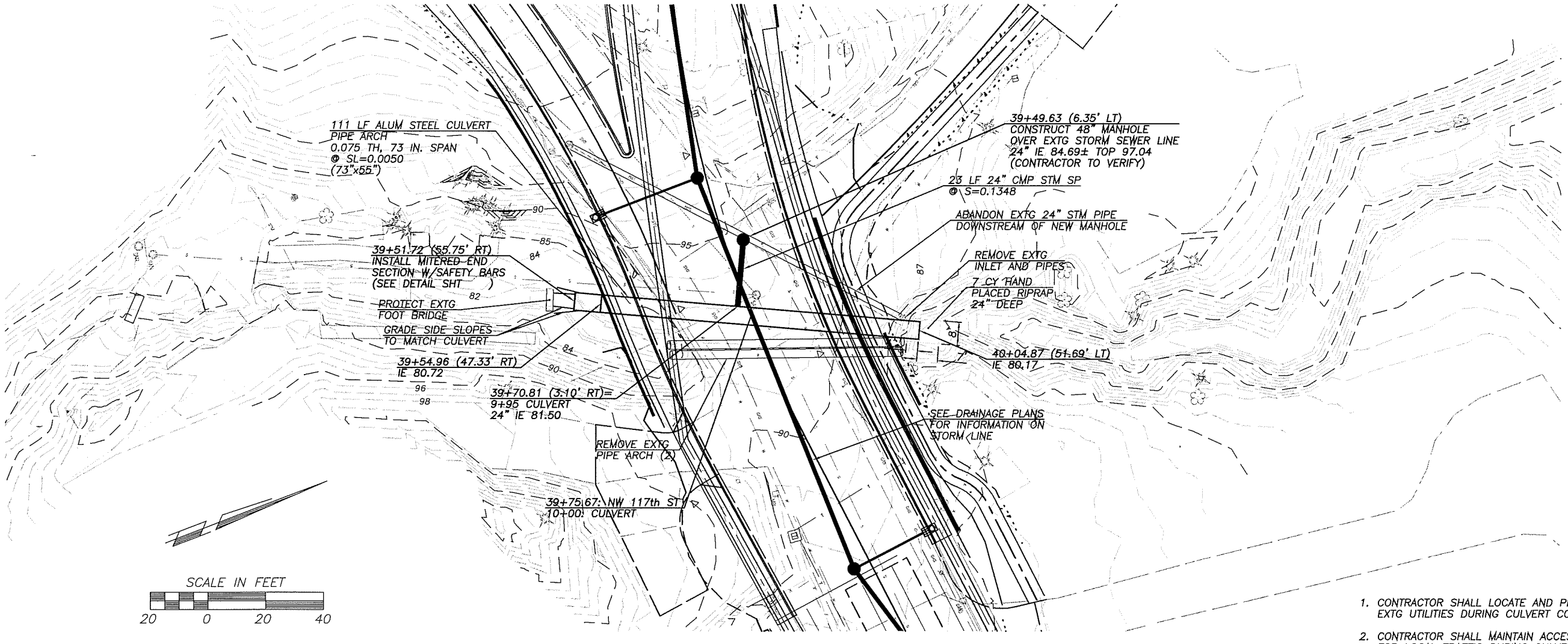

1. CONTRACTOR SHALL LOCATE AND PROTECT EXTG UTILITIES DURING CULVERT CONSTRUCTION.
2. CONTRACTOR SHALL MAINTAIN ACCESS TO BASSEL RD. FOR LOCAL TRAFFIC DURING CULVERT CONSTRUCTION.

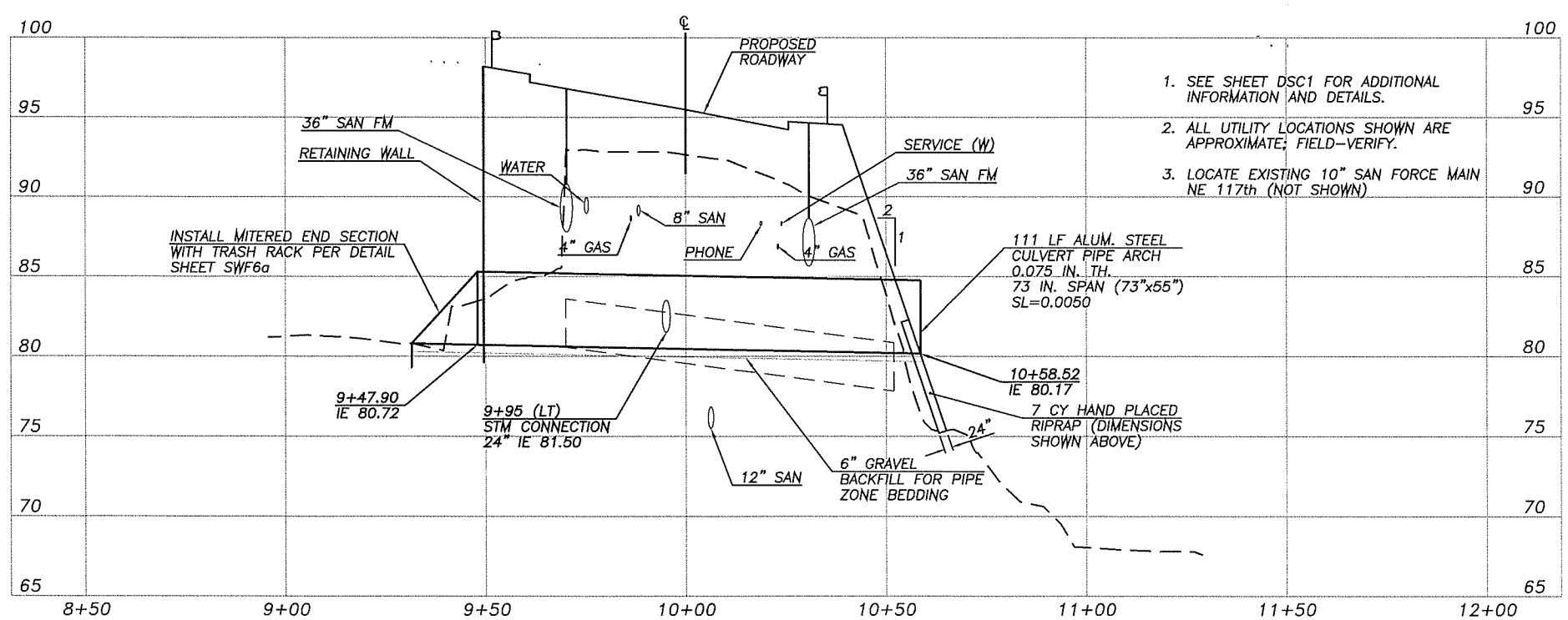

1. SEE SHEET DSC1 FOR ADDITIONAL INFORMATION AND DETAILS.
2. ALL UTILITY LOCATIONS SHOWN ARE APPROXIMATE; FIELD-VERIFY.
3. LOCATE EXISTING 10" SAN FORCE MAIN NE 117th (NOT SHOWN)

DESIGNED	RED
DRAWN	DPS
CRP	381022
HOR.	1"=20'
VERT.	1"=5'
DATE	OCT 2004
DWG:	SWF9
SHEET	OF

CALL 48 HOURS BEFORE YOU DIG
1-800-553-4344
"It's the Law"
NORTHWEST UTILITIES NOTIFICATION CENTER

R. CLAYED E. DARLAND
STATE OF WASHINGTON
22404
REGISTERED PROFESSIONAL ENGINEER
EXPIRES: MARCH 17, 2005

DESIGN & ENGINEERING DIVISION
DESIGN SECTION

NW 119TH / 117TH STREET
SUDS CREEK CROSSING PLAN & PROFILE

proud past, promising future
CLARK COUNTY
WASHINGTON

E:\projects\2077_9\CAD\Final\dwg\Prod\20779_SWF9.dwg, 10/04/04 03:48:47 PM, rad

NEW CONSTRUCTION
FOR USE WITH SIDEWALKS LOCATED ANYWHERE IN THE RIGHT-OF-WAY

NOTES:

1. RAMPS TO BE POURED SEPARATELY FROM SIDEWALK.
2. CROSSWALKS TO BE CENTERED ON SIGNAL POLE TO POLE CENTERLINES. CURB RAMP TO BE CENTERED WITHIN CROSSWALK.
3. SIDEWALK SLOPE TO BE 2% MAXIMUM RADIALLY AROUND CORNER SECTION. SINGLE RAMPS CAN BE INSTALLED.
4. RAMP SLOPES SHALL NOT BE STEEPER THAN 12H:1V.

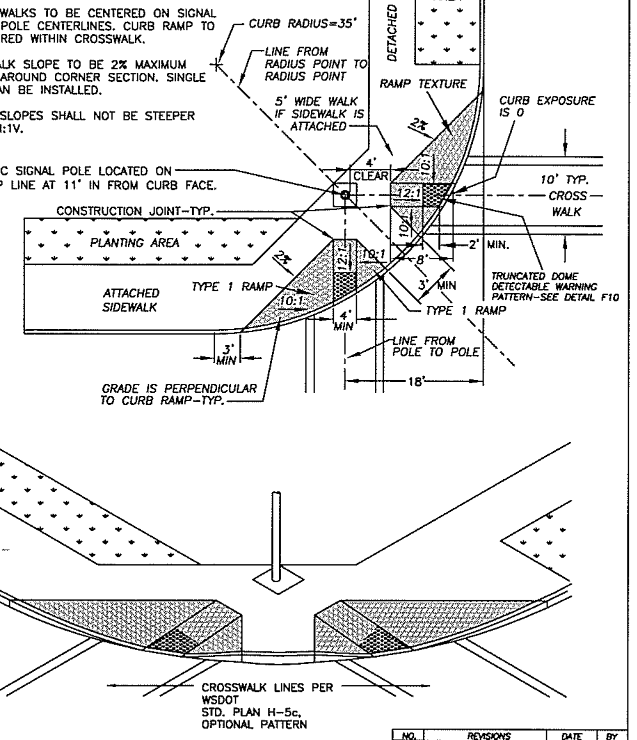

NO.	REVISIONS	DATE	BY
1	TRUNCATED DOMES	6/14/03	SCH

Department of Public Works — CLARK COUNTY WASHINGTON — proud past, promising future
TYPE 2 RAMP — APPROVED — COUNTY ENGINEER — DATE 8/22/00 — F2 — DESIGNED DB, DRAWN KB, DATE 7/24/00

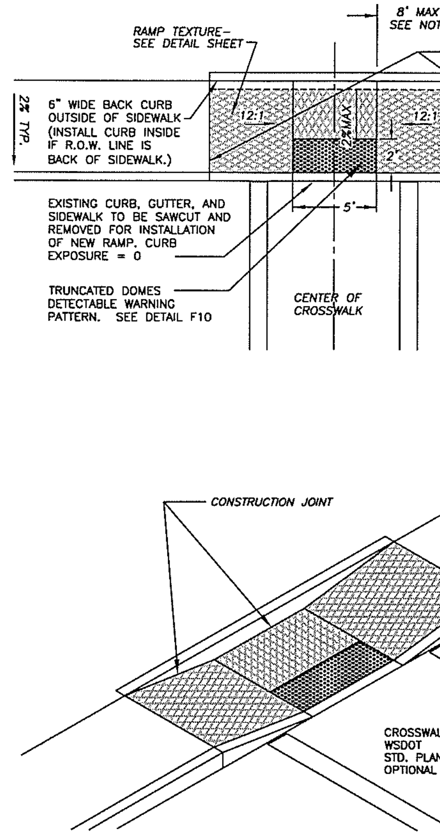

NOTES:

1. RAMPS TO BE POURED SEPARATELY FROM SIDEWALK.
2. RAMP TO BE CENTERED IN CROSSWALK.
3. RAMP RUNS TO BE 12:1 SLOPE UNLESS LENGTH WOULD EXCEED 8 FEET, THEN 8' LENGTH GOVERNS.
4. BACK CURB IS STANDARD BARRIER CURB.

NO.	REVISIONS	DATE	BY
1	TRUNCATED DOME PATTERN	6/15/03	SCH

Department of Public Works — CLARK COUNTY WASHINGTON — proud past, promising future
TYPE 3 RAMP — APPROVED — COUNTY ENGINEER — DATE 8/22/00 — F3 — DESIGNED DB, DRAWN KB, DATE 7/24/00

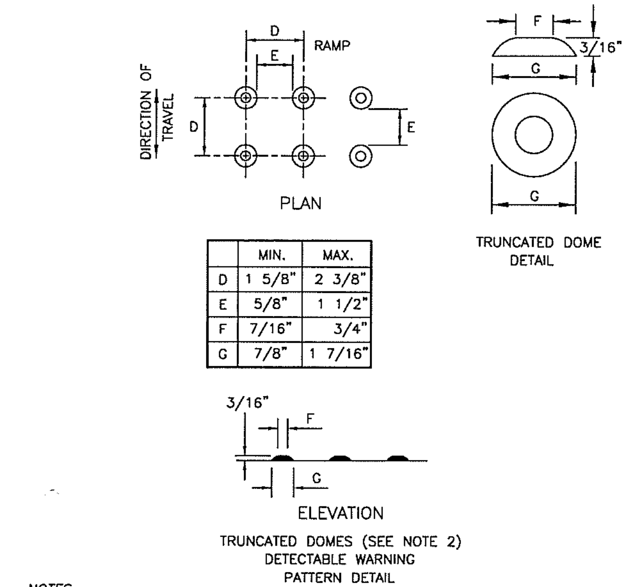

	MIN.	MAX.
D	1 5/8"	2 3/8"
E	5/8"	1 1/2"
F	7/16"	3/4"
G	7/8"	1 7/16"

TRUNCATED DOMES (SEE NOTE 2)
DETECTABLE WARNING
PATTERN DETAIL

NOTES

1. AVOID PLACING DRAINAGE STRUCTURES, JUNCTION BOXES OR OTHER OBSTRUCTIONS IN FRONT OF RAMP ACCESS AREA.
2. THE DETECTABLE WARNING PATTERNS CAN BE CREATED BY ACCEPTABLE MEANS THAT WILL ACHIEVE THE TRUNCATED DOME DIMENSIONS AND SPACING SHOWN.
3. PLACE TRUNCATED DOME DETECTABLE WARNING TEXTURE IN THE LOWER 24" OF THE THROAT OF THE RAMP ONLY. ARRANGE DOMES USING IN-LINE PATTERN ONLY AS SHOWN. COLOR OF TEXTURE (COATING) SHALL BE SAFETY YELLOW IN COMPLIANCE WITH WSDOT STD. SPEC. OR AS INSTRUCTED BY COUNTY INSPECTOR.
4. FOR CONSTRUCTION OF SIDEWALK RAMPS OUTSIDE OF PUBLIC RIGHT-OF-WAY, CHECK WITH STATE BUILDING CODES.

Department of Public Works — CLARK COUNTY WASHINGTON — proud past, promising future
TRUNCATED DOME DETECTABLE WARNING PATTERN — APPROVED — COUNTY ENGINEER — DATE 01/01/04 — STANDARD F10 — PLAN No. DESIGNED SCH, DRAWN SCH, DATE 6/15/03

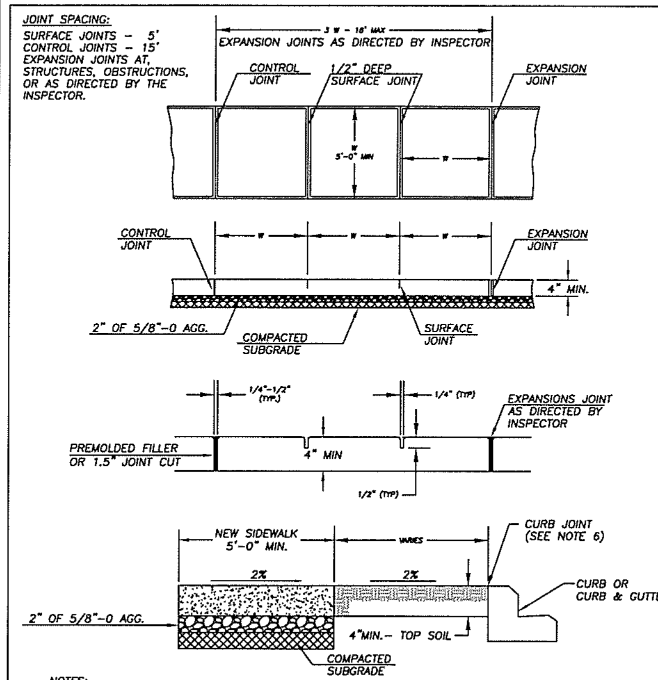

NOTES:

1. CONCRETE SHALL BE 3,000 PSI MIN. (CLASS 3000), 3 1/2" SLUMP (± 1")
2. FINISH SHALL BE MEDIUM BROOM PERPENDICULAR TO PEDESTRIAN TRAFFIC UNLESS OTHERWISE DIRECTED.
3. ALL EXISTING EDGES SHALL BE SAWCUT.
4. NO FILLER REQUIRED FOR SURFACE JOINTS.
5. ALL JOINTS AND EDGES SHALL BE FINISHED WITH 1/4" RADIUS EDGER (3" SMOOTH EACH SIDE)
6. FOR SIDEWALKS ADJACENT TO THE CURB AND POURED AT THE SAME TIME AS THE CURB, THE JOINT BETWEEN THEM SHALL BE A TROWELED JOINT WITH A MIN. 1/2" RADIUS.

NO.	REVISIONS	DATE	BY
1	CHANGE SUBGRADE &	03/28/02	KB
2	+ 2" BASE AGG. & NOTES	10/07/02	SCH

Department of Public Works — CLARK COUNTY WASHINGTON — proud past, promising future
SIDEWALK DETAIL — APPROVED — COUNTY ENGINEER — DATE 01/01/04 — STANDARD F12 — PLAN No. DESIGNED DB, DRAWN KB, DATE 10/08/02

NOTES:

1. EXISTING CURB, GUTTER, AND SIDEWALK TO BE SAWCUT AND REMOVED FOR INSTALLATION OF NEW RAMP.
2. RAMPS TO BE POURED SEPARATELY FROM SIDEWALK.
3. RAMP SLOPES SHALL NOT BE STEEPER THAN 12H:1V.

6" BACK CURB OUTSIDE OF SIDEWALK (CAN BE INSTALLED INSIDE IF R.O.W. LINE IS BACK OF SIDEWALK). CURB IS TYPE E-1 CURB PER STD. PLAN F18.

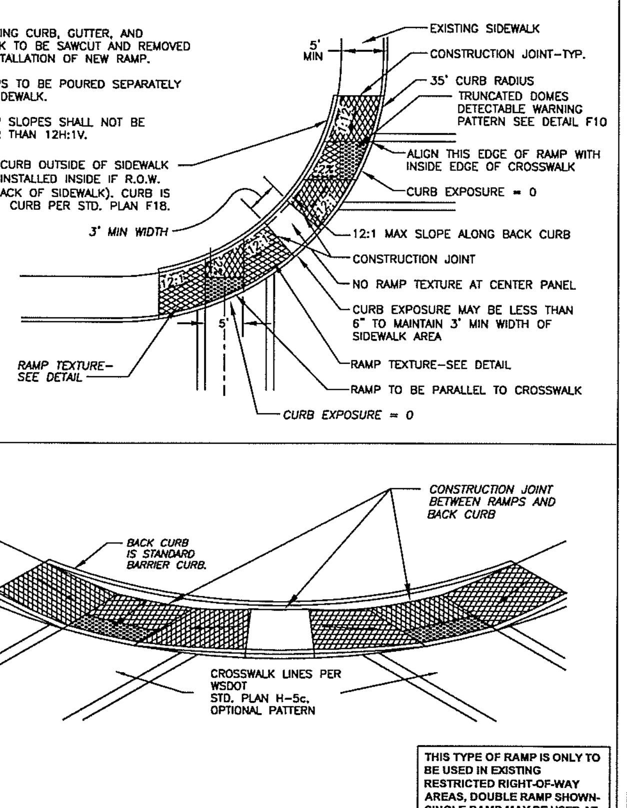

THIS TYPE OF RAMP IS ONLY TO BE USED IN EXISTING RESTRICTED RIGHT-OF-WAY AREAS, DOUBLE RAMP SHOWN-SINGLE RAMP MAY BE USED AT SOME INSTALLATIONS.

NO.	REVISIONS	DATE	BY
1	TRUNCATED DOMES	6/14/03	SCH

Department of Public Works — CLARK COUNTY WASHINGTON — proud past, promising future
TYPE 2 ALTERNATE RAMP - DOUBLE — APPROVED — COUNTY ENGINEER — DATE 8/22/00 — F2b — DESIGNED DB, DRAWN KB, DATE 7/24/00

NOTES:

1. RAMP TO BE 1:12 SLOPE, IF LENGTH EXCEEDS 8 FEET, THEN END RAMP AT 8 FEET.
2. EXISTING CURB AND SIDEWALK TO BE SAWCUT AND REMOVED FOR INSTALLATION OF NEW RAMP.
3. RAMP MAY BE USED MID BLOCK OR ON INTERSECTION RADIUS.
4. RAMP TO BE CENTERED IN CROSSWALK
5. RAMPS TO BE CONSTRUCTED SEPARATELY.
6. SEE STANDARD LANDING CROSS SECTION DETAIL FOR SECTIONS A-A AND B-B.
7. RAMP SLOPES SHALL NOT BE STEEPER THAN 12H:1.

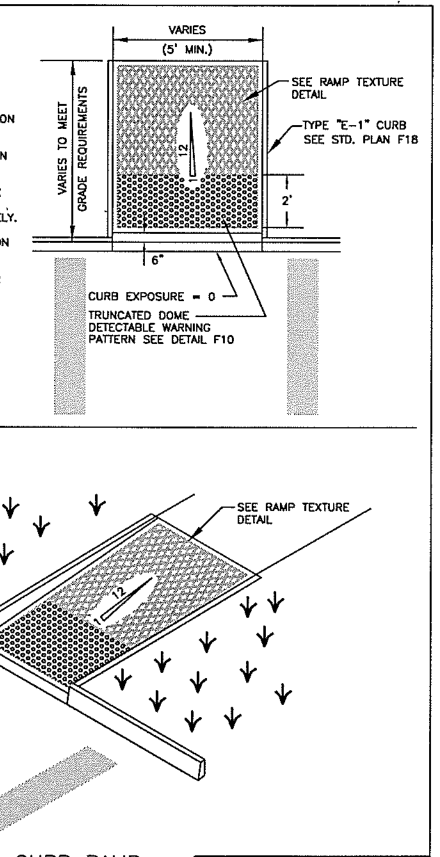

CURB RAMP

NO.	REVISIONS	DATE	BY
1	TRUNCATED DOME PATTERN	6/15/03	SCH

Department of Public Works — CLARK COUNTY WASHINGTON — proud past, promising future
CURB RAMP — APPROVED — COUNTY ENGINEER — DATE 01/01/04 — F7 — DESIGNED SCH, DRAWN SCH, DATE 07/31/02

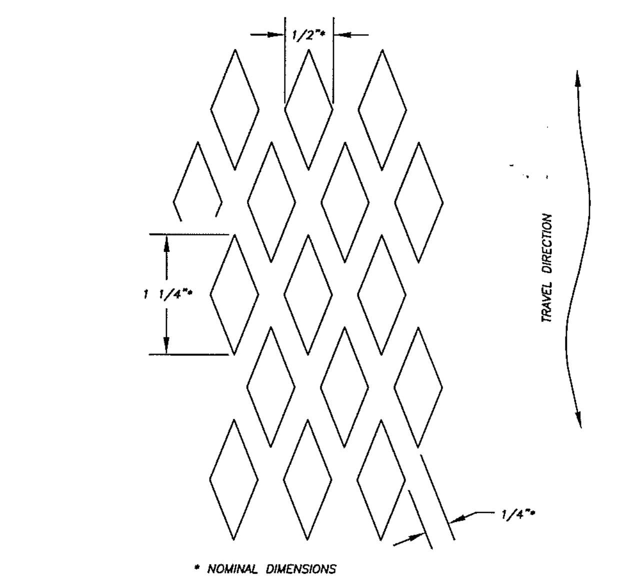

* NOMINAL DIMENSIONS

RAMP TEXTURE DETAIL

RAMP TEXTURE IS TO BE DONE WITH AN EXPANDED METAL GRATE PLACED AND REMOVED FROM WET CONCRETE TO LEAVE A DIAMOND PATTERN AS SHOWN. THE LONG AXIS OF THE DIAMOND PATTERN SHALL BE IN THE DIRECTION OF TRAVEL. GROOVES SHALL BE 1/8" DEEP AND 1/4" WIDE. ALTERNATIVE TEXTURE PATTERNS SHALL BE APPROVED BY REVIEWING AUTHORITY BEFORE USE.

Department of Public Works — CLARK COUNTY WASHINGTON — proud past, promising future
RAMP TEXTURE DETAIL — APPROVED — COUNTY ENGINEER — DATE 8/22/00 — F11 — DESIGNED DB, DRAWN KB, DATE 7/24/00

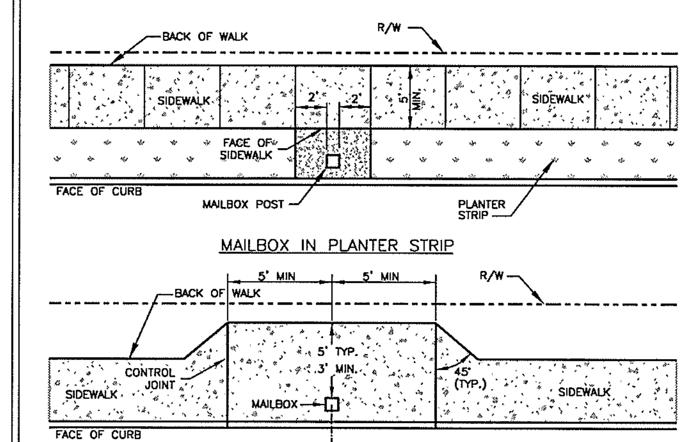

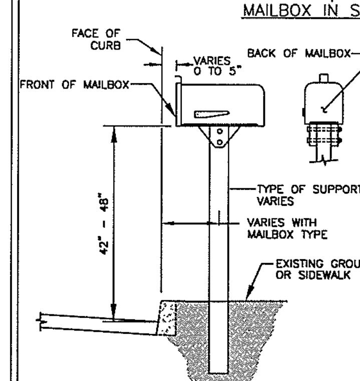

NOTES:

1. SEE CURRENT WSDOT STANDARD PLAN No. H-12 FOR MAILBOX, POST, BRACKET AND OTHER INSTALLATION DETAILS.
2. MAILBOXES MUST BE POSTMASTER APPROVED. CONTACT MIKE WENTZEL (MAINTENANCE MANAGER) AT 992-5052.
3. LOCATION OF MAILBOXES ARE SUBJECT TO APPROVAL BY COUNTY ENGINEERING FOR ACCESS AND SIGHT DISTANCE REQUIREMENTS. CONTACT ENGINEERING SERVICES AT 397-2375 ext. 4997
4. INSTALL EXPANSION JOINT MATERIAL AROUND MAILBOX POST WHEN SET IN SIDEWALK.
5. EXTEND SIDEWALK JOINTS THROUGH WIDENED SIDEWALK SECTION.
6. COLLECTION BOX UNITS (CBU) AND CONCRETE BASE ARE INSTALLED BY THE U.S. POSTAL SERVICE. SEE NOTE 2 FOR CONTACT.
7. A MAILBOX TURNOUT CONFORMING TO DETAIL F13b IS REQUIRED FOR ALL STREETS EXCEPT ACCESS AND SUBCOLLECTOR STREETS WHERE THE POSTED SPEED LIMIT IS 25 MPH OR LESS.

WSDOT STD. PLANS WEB SITE ADDRESS:
http://www.wsdot.wa.gov/eesc/design/designstandards/HTM/TOC.pdf

Department of Public Works — CLARK COUNTY WASHINGTON — proud past, promising future
SIDEWALK MAILBOX PLACEMENT — APPROVED — COUNTY ENGINEER — DATE 01/01/04 — STANDARD F13 — PLAN No. DESIGNED SCH, DRAWN SCH, DATE 07/31/02

DESIGN & ENGINEERING DIVISION
DESIGN SECTION

NW 119TH / 117TH STREET
ROADWAY DETAILS

CLARK COUNTY WASHINGTON — proud past, promising future

MICHAEL M. EMRICK — STATE OF WASHINGTON — 29030 REGISTERED PROFESSIONAL ENGINEER — EXPIRES: MAY 26, 2005

CALL 48 HOURS BEFORE YOU DIG
1-800-553-4344
"It's the Law"
NORTHWEST UTILITIES NOTIFICATION CENTER

DESIGNED	MME
DRAWN	BAK
CRP	381022
HOR.	NA
VERT.	NA
DATE	10/20/01
DWG:	RD01
SHEET	OF

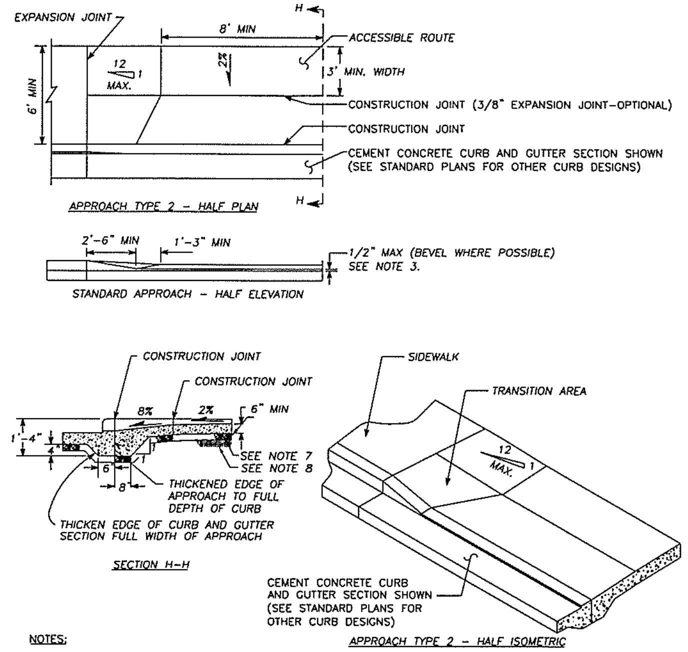

NOTES:

1. A MINIMUM 3' WIDE ACCESSIBLE ROUTE SHALL BE MAINTAINED IN ALL PEDESTRIAN ACCESSIBLE AREAS.
2. CONTRACTION JOINTS SHALL BE PLACED ALONG SIDEWALKS IN ACCORD WITH SIDEWALK DETAIL. ALL JOINTS SHALL BE CLEANED AND EDGED.
3. CHANGES IN LEVEL UP TO 1/4" MAY BE VERTICAL AND WITHOUT EDGE TREATMENT. CHANGES IN LEVEL BETWEEN 1/4" AND 1/2" SHALL BE BEVELED WITH A SLOPE NO GREATER THAN 2:1.
4. CEMENT CONCRETE APPROACHES SHALL BE CONSTRUCTED OF AIR-ENTRAINED CONCRETE CLASS 3000 AND MAY BE POURED INTEGRAL WITH CURB.
5. EXISTING CURB, GUTTER AND SIDEWALK TO BE SAWCUT AND REMOVED FOR INSTALLATION OF APPROACH.
6. COMMERCIAL DRIVEWAY REQUIRES REINFORCING STEEL (6"x6" 10 GA WIRE MESH) MIN. 3" COVER
7. 3" DEPTH 3/4"-0 CRUSHED AGGREGATE BASE COMPACTED TO 95% OF MAX. DRY DENSITY.
8. SUBGRADE PREPARATION PER WSDOT STD. SPEC. 2-06.3(1).

NO.	REVISIONS	DATE	BY
1	NOTES #6, 7, 8	10/09/02	SCH

DWG: F15.DWG

Department of Public Works
CLARK COUNTY WASHINGTON
proud past, promising future

CEMENT CONCRETE APPROACH DETAIL – TYPE 2
APPROVED
COUNTY ENGINEER — DATE 8/22/00
F15
DESIGNED DB DRAWN KB DATE 7/24/00

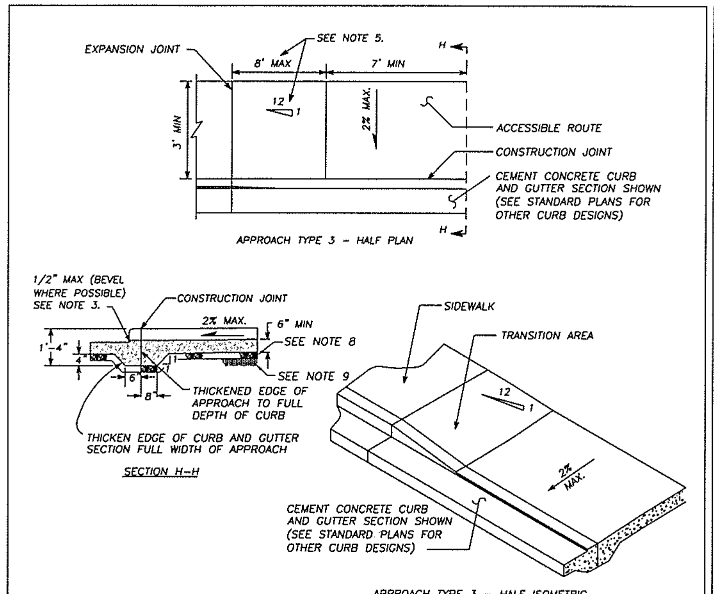

NOTES:

1. A MINIMUM 3' WIDE ACCESSIBLE ROUTE SHALL BE MAINTAINED IN ALL PEDESTRIAN ACCESSIBLE AREAS.
2. CONTRACTION JOINTS SHALL BE PLACED ALONG SIDEWALKS IN ACCORD WITH SIDEWALK DETAIL. ALL JOINTS SHALL BE CLEANED AND EDGED.
3. CHANGES IN LEVEL UP TO 1/4" MAY BE VERTICAL AND WITHOUT EDGE TREATMENT. CHANGES IN LEVEL BETWEEN 1/4" AND 1/2" SHALL BE BEVELED WITH A SLOPE NO GREATER THAN 2:1.
4. TRANSITION AREA TO BE SLOPED AT 1v TO 12h, UNLESS STREET GRADE WOULD CREATE A TRANSITION LENGTH GREATER THAN 8', THEN THE MAXIMUM LENGTH OF 8' GOVERNS SLOPE.
5. CEMENT CONCRETE APPROACHES SHALL BE CONSTRUCTED OF AIR-ENTRAINED CONCRETE CLASS 3000 AND MAY BE POURED INTEGRAL WITH CURB.
6. EXISTING CURB, GUTTER AND SIDEWALK TO BE SAWCUT AND REMOVED FOR INSTALLATION OF APPROACH.
7. COMMERCIAL DRIVEWAY REQUIRES REINFORCING STEEL (6"x6"x10 GA MESH) MIN. 3" COVER.
8. 3" DEPTH 3/4"-0 CRUSHED AGGREGATE BASE COMPACTED TO 95% OF MAX. DRY DENSITY.
9. SUBGRADE PREPARED PER WSDOT STD. SPEC. 2-06.3(1)

NO.	REVISIONS	DATE	BY
1	NOTE # 7, 8, 9	7/24/02	SCH

DWG: F16.dwg

Department of Public Works
CLARK COUNTY WASHINGTON
proud past, promising future

CEMENT CONCRETE APPROACH DETAIL – TYPE 3
APPROVED
COUNTY ENGINEER — DATE 8/22/00
F16
DESIGNED DB DRAWN KB DATE 7/24/00

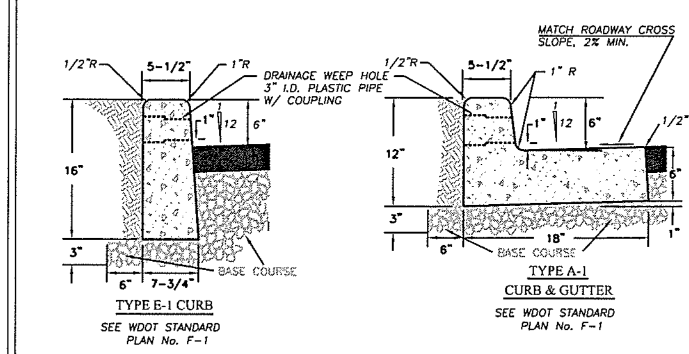

NOTES

1. CONCRETE SHALL BE 3000 PSI MIN. (CLASS 3000) 3 1/2" SLUMP (MAX.)
2. CURBS ADJACENT TO PAVEMENT OR SIDEWALK TO HAVE EXPANSION AND/OR CONTRACTION JOINTS TO MATCH EXISTING PATTERNS.
3. 3/8" EXPANSION JOINTS TO BE PROVIDED AT EACH POINT OF TANGENCY OF THE CURB, COLD JOINTS, EACH SIDE OF INLET STRUCTURES AND DRIVEWAYS. MATERIAL TO BE PRE-MOLDED, ASPHALT IMPREGNATED AND NON EXTRUDING.
4. CONTRACTION JOINT SPACING NOT TO EXCEED 15 FEET. THE DEPTH OF THE JOINT SHALL BE AT LEAST 1-1/2 INCHES. WEEP HOLES TO BE CENTERED WITH CONTRACTION JOINTS.
5. BASE COURSE SHALL BE TO SUBGRADE OF STREET SECTION OR 3 INCHES, WHICHEVER IS GREATER, AND SHALL EXTEND 6" BEHIND THE CURB.
6. DRAINAGE WEEP HOLES TO BE 3" I.D. PLASTIC PIPE WITH COUPLING. FINISH PIPE END FLUSH WITH FACE OF CURB.
7. GROUT ANY VOIDS IN CONCRETE SURROUNDING PIPE.
8. DRAINAGE ACCESS THROUGH EXISTING CURBS SHALL BE CORE DRILLED.
9. CURB TO BE BRUSH FINISHED. ALL EXISTING EDGES SHALL BE SAWCUT.
10. ALL MATERIALS AND WORKMANSHIP FOR TYPE E-1 & A-1 SHALL BE IN ACCORDANCE WITH WDOT STANDARD PLAN No. F-1, APPROVED 7/18/97 OR MOST CURRENT REVISION.

NO.	REVISIONS	DATE	BY

DWG: F18.DWG

Department of Public Works
CLARK COUNTY WASHINGTON
proud past, promising future

CONCRETE CURBS
APPROVED
COUNTY ENGINEER — DATE 01/01/04
STANDARD PLAN No. F18
DESIGNED SCH DRAWN SCH DATE 07/24/02

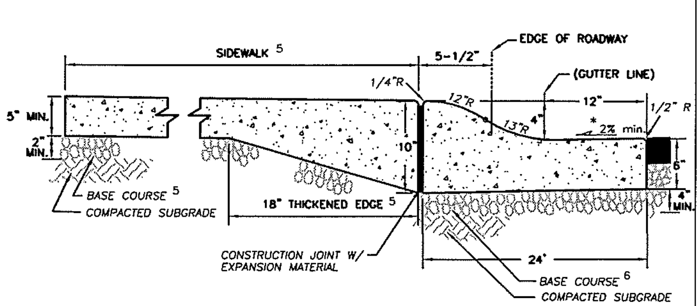

ROLL CURB & GUTTER
(MOUNTABLE CURB & SIDEWALK)

NOTES

1. CONCRETE SHALL BE 3000 PSI MIN. (CLASS 3000) 3 1/2" SLUMP (MAX.)
2. CURBS ADJACENT TO PAVEMENT OR SIDEWALK TO HAVE EXPANSION AND/OR CONTRACTION JOINTS TO MATCH EXISTING PATTERNS.
3. 3/8" EXPANSION JOINTS TO BE PROVIDED AT EACH POINT OF TANGENCY OF THE CURB, COLD JOINTS, EACH SIDE OF INLET STRUCTURES AND DRIVEWAYS. MATERIAL TO BE PRE-MOLDED, ASPHALT IMPREGNATED AND NON EXTRUDING.
4. CONTRACTION JOINT SPACING NOT TO EXCEED 15 FEET. THE DEPTH OF THE JOINT SHALL BE AT LEAST 1-1/2 INCHES.
5. THICKENED EDGE SIDEWALK SHALL BE PLACED ON 2" (MIN.) CRUSHED AGGREGATE (5/8"-0). SUBGRADE AND BASE COURSE COMPACTED TO 95% MAX. DRY DENSITY.
6. BASE COURSE UNDER ROLL CURB & GUTTER SHALL BE TO SUBGRADE OF STREET SECTION OR 4 INCHES, WHICHEVER IS GREATER, AND SHALL EXTEND 6" BEHIND THE CURB.
7. CURB TO BE BRUSH FINISHED. ALL EXISTING EDGES SHALL BE SAWCUT.
8. USE OF ROLL CURB & GUTTER WITH COMMERCIAL DRIVEWAYS WILL REQUIRE REINFORCING STEEL (6"x6"x10 GA. WIRE MESH) MIN. 3" COVER.

NO.	REVISIONS	DATE	BY

DWG: 18b.DWG

Department of Public Works
CLARK COUNTY WASHINGTON
proud past, promising future

CONCRETE ROLL CURB & GUTTER (MOUNTABLE CURB & SIDEWALK)
APPROVED
COUNTY ENGINEER — DATE 01/01/04
STANDARD PLAN No. F18b
DESIGNED SCH DRAWN SCH DATE 07/07/03

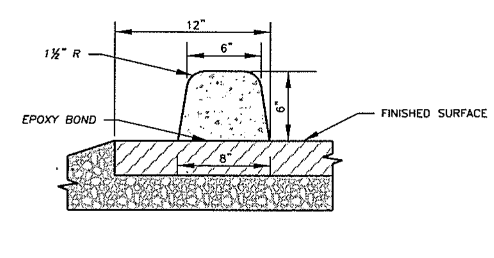

EXTRUDED CONCRETE BONDED CURB

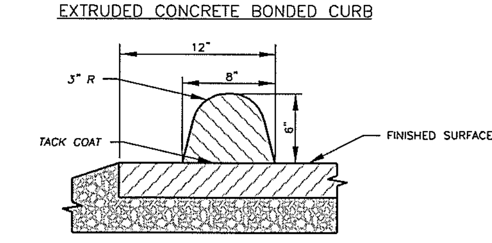

EXTRUDED AC BONDED CURB

NOTES:

1. CONCRETE SHALL BE 3000 PSI MIN., (CL 3000) 3-1/2" SLUMP (MAX.).
2. THE EPOXY RESIN SYSTEM SHALL BE FURNISHED IN THE TYPE, GRADE, AND CLASS AS SPECIFIED ACCORDING TO CURRENT ASTM C 881.
3. CONCRETE CURBS ADJACENT TO PAVEMENT OR SIDEWALK TO HAVE EXPANSION AND/OR CONSTRUCTION JOINTS TO MATCH EXISTING PATTERNS.
4. FOR CONCRETE CURBS 3/8" EXPANSION JOINTS SHALL BE PLACED AT 45' MAXIMUM SPACING, ON BOTH SIDES OF CATCH BASINS, AT TOPS OF DRIVEWAYS, AND ALL CHANGES IN DIRECTION. 1 1/2" CONTRACTION JOINTS TO BE PLACED AT 10' INTERVALS.
5. USE OF EXTRUDED CURB REQUIRES PRE-APPROVAL BY COUNTY ENGINEER.

NO.	REVISIONS	DATE	BY

DWG: F18a.DWG

Department of Public Works
CLARK COUNTY WASHINGTON
proud past, promising future

EXTRUDED CURBS
APPROVED
COUNTY ENGINEER — DATE 01/01/04
STANDARD PLAN No. F18a
DESIGNED SCH DRAWN SCH DATE 07/30/02

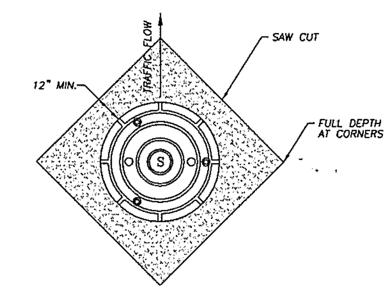

PLAN VIEW

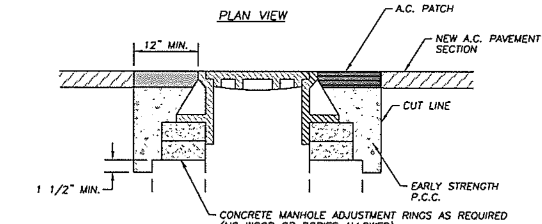

STEPS 2,3, & 4

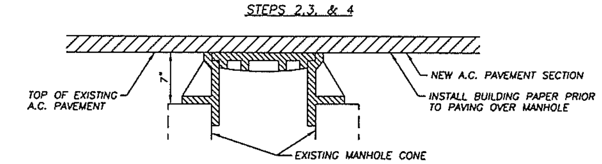

STEP 1

STEP 1 COVER EXSITING MANHOLE WITH BUILDING PAPER AND CONSTRUCT A.C. PAVEMENT OVER TOP OF MANHOLE.
STEP 2 SAW CUT AND REMOVE PAVEMENT AROUND MANHOLE 12" MIN. FROM MANHOLE FRAME.
STEP 3 RAISE MANHOLE FRAME AND COVER USING CONCRETE RINGS AND MECHANICAL ADJUSTMENT DEVICES TO FINISH GRADE MATCHING PROFILE AND CROSS SLOPE.
STEP 4 BACKFILL WITH EARLY STRENGTH P.C.C. AND A.C. TO DEPTHS AS DIRECTED.

NO.	REVISIONS	DATE	BY

DWG: F27.dwg

Department of Public Works
CLARK COUNTY WASHINGTON
proud past, promising future

MANHOLE ADJUSTMENT DETAIL
APPROVED
COUNTY ENGINEER — DATE 9/12/00
F27
DESIGNED DRAWN DATE 7/20/00

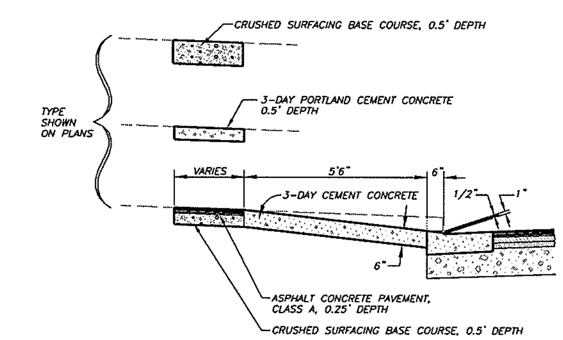

SECTION A-A

NTS

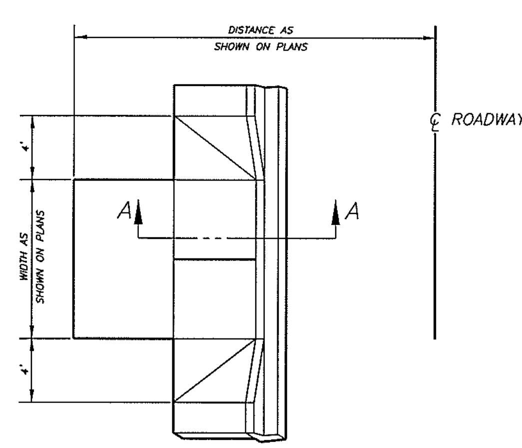

TYPICAL DRIVEWAY ENTRANCE

NTS

CLARK COUNTY WASHINGTON
proud past, promising future

DESIGN & ENGINEERING DIVISION
DESIGN SECTION

NW 119TH / 117TH STREET
ROADWAY DETAILS

MICHAEL M. EMRICK — STATE OF WASHINGTON — 29030 REGISTERED PROFESSIONAL ENGINEER — EXPIRES: MAY 26, 2005

CALL 48 HOURS BEFORE YOU DIG
1-800-553-4344
"It's the Law"
NORTHWEST UTILITIES NOTIFICATION CENTER

DESIGNED	MME
DRAWN	BAK
CRP	381022
HOR.	NA
VERT.	NA
DATE	10/20/01
DWG:	RD02
SHEET	OF

MANHOLE TYPE 3 48", 54", 60", 72", & 96" (STANDARD PLAN No. D1.3)

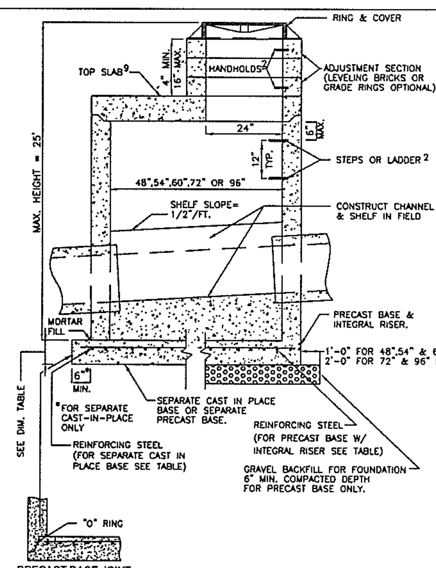

MANHOLE DIMENSION TABLE

DIA.	THICKNESS WALL	THICKNESS BASE	MAXIMUM KNOCKOUT SIZE	MINIMUM DISTANCE BETWEEN KNOCKOUTS	BASE REINFORCING STEEL SQ IN/FT EACH DIRECTION INTEGRAL BASE	SEPARATE BASE
48"	4"	6"	36"	8"	0.15	0.23
54"	4.5"	8"	42"	8"	0.19	0.19
60"	5"	8"	48"	8"	0.25	0.25
72"	6"	8"	60"	12"	0.24	0.35
96"	8"	12"	84"	12"	0.29	0.39

NOTES:

1. MANHOLES SHALL BE CONSTRUCTED IN ACCORDANCE WITH AASHTO M199 UNLESS OTHERWISE SHOWN ON PLANS OR NOTED IN THE WSDOT/APWA STANDARD SPECIFICATIONS.
2. HANDHOLDS IN ADJUSTMENT SECTION SHALL HAVE 3" MIN. CLEARANCE. STEPS IN MANHOLE SHALL HAVE 6" MIN. CLEARANCE. SEE PLAN D1.5, "MANHOLE DETAILS." HANDHOLDS SHALL BE PLACED IN ALTERNATING GRADE RINGS OR LEVELING BRICK COURSE WITH A MIN. OF ONE HANDHOLD BETWEEN THE LAST STEP AND THE TOP OF THE MANHOLE.
3. ALL REINFORCED CAST-IN-PLACE CONCRETE SHALL BE CLASS4000. NON-REINFORCED CONCRETE IN CHANNEL AND SHELF SHALL BE CLASS 3000. ALL PRECAST CONCRETE SHALL BE CLASS 4000.
4. PRECAST BASES SHALL BE FURNISHED WITH CUTOUTS OR KNOCKOUTS. KNOCKOUTS SHALL HAVE WALL THICKNESS OF 2" MIN. UNUSED KNOCKOUTS NEED NOT BE GROUTED IF WALL IS LEFT INTACT. PIPES SHALL BE INSTALLED ONLY IN FACTORY KNOCKOUTS UNLESS OTHERWISE APPROVED BY THE ENGINEER.
5. KNOCKOUT OR CUTOUT HOLE SIZE SHALL EQUAL PIPE OUTER DIAM. PLUS MANHOLE WALL THICKNESS. SEE MANHOLE DIMENSION TABLE BELOW.
6. MANHOLE RINGS AND COVERS SHALL BE IN ACCORDANCE WITH SEC. 7.05 AND MEET THE STRENGTH REQUIREMENTS OF FEDERAL SPECIFICATION RR-F-621D. MATING SURFACES SHALL BE FINISHED TO ASSURE NON-ROCKING FIT WITH ANY COVER POSITION.
7. ALL BASE REINFORCING STEEL SHALL HAVE A MIN. YIELD STRENGTH OF 60,000 PSI AND BE PLACED IN THE UPPER HALF OF THE BASE WITH 1" MIN. CLEARANCE.
8. FOR HEIGHTS OF 12' OR LESS, MIN. SOIL BEARING VALUE SHALL EQUAL 3,300 POUNDS PER SQUARE FOOT. FOR HEIGHTS OVER 12', MIN. SOIL BEARING VALUE SHALL EQUAL 3,800 POUNDS PER SQUARE FOOT.
9. FOR DETAILS SHOWING GRADE RING, LADDER, STEPS, HANDHOLDS, AND TOP SLABS, SEE PLAN D1.5, "MANHOLE DETAILS."
10. INSIDE DROP MAXIMUM TO BE 4' VERTICAL DISTANCE I.E. TO I.E.
11. KNOCKOUTS TO BE USED WHEN STUB OUT PIPE IS 3' OR LESS.
12. MINIMUM 0.20' FALL BETWEEN INLET AND OUTLET, ANY REDUCTION IN THIS DESIGN REQUIREMENT MUST BE APPROVED BY REVIEWING AUTHORITY.
13. SEE THE WSDOT/APWA STANDARD SPECIFICATIONS SEC. 7-05.3 FOR JOINT REQUIREMENTS.

Department of Public Works — CLARK COUNTY WASHINGTON — proud past, promising future
COUNTY ENGINEER — MANHOLE TYPE 3 48", 54", 60", 72", & 96" — APPROVED — 01/01/04 DATE — STANDARD PLAN No. D1.3 — DESIGNED SCH — DRAWN SCH — DATE 07/07/03 — DWG: D1-3.DWG

STANDARD MANHOLE TYPE 1 48", 54", & 60" (STANDARD PLAN No. D1.1)

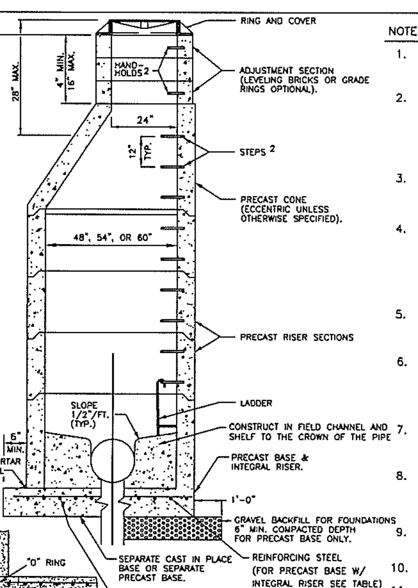

MANHOLE DIMENSION TABLE

DIA.	THICKNESS WALL	THICKNESS BASE	MAXIMUM KNOCKOUT SIZE	MINIMUM DISTANCE BETWEEN KNOCKOUTS	BASE REINFORCING STEEL SQ IN/FT EACH DIRECTION INTEGRAL BASE	SEPARATE BASE
48"	4"	6"	36"	8"	0.15	0.23
54"	4.5"	8"	42"	8"	0.19	0.19
60"	5"	8"	48"	8"	0.25	0.25

NOTES:

1. MANHOLES SHALL BE CONSTRUCTED IN ACCORDANCE WITH AASHTO M199 UNLESS OTHERWISE SHOWN ON PLANS OR NOTED IN THE WSDOT/APWA STANDARD SPECIFICATIONS.
2. HANDHOLDS IN ADJUSTMENT SECTION SHALL HAVE 3" MIN. CLEARANCE. STEPS IN MANHOLE SHALL HAVE 6" MIN. CLEARANCE. SEE PLAN NO. D1.5, "MANHOLE DETAILS." HANDHOLDS SHALL BE PLACED IN ALTERNATING GRADE RINGS OR LEVELING BRICK COURSE WITH A MIN. OF ONE HAND HOLD BETWEEN THE LAST STEP AND THE TOP OF THE MANHOLE.
3. ALL REINFORCED CAST-IN-PLACE CONCRETE SHALL BE CLASS 4000. ALL PRECAST CONCRETE SHALL BE CLASS 4000. NON-REINFORCED CONCRETE IN CHANNEL AND SHELF SHALL BE CLASS 3000.
4. PRECAST BASES SHALL BE FURNISHED WITH CUTOUTS OR KNOCKOUTS. KNOCKOUTS SHALL HAVE WALL THICKNESS OF 2" MIN. UNUSED KNOCKOUTS NEED NOT BE GROUTED IF WALL IS LEFT INTACT. PIPES SHALL BE INSTALLED ONLY IN FACTORY KNOCKOUTS UNLESS OTHERWISE APPROVED BY THE ENGINEER.
5. KNOCKOUT OR CUTOUT HOLE SIZE SHALL EQUAL PIPE OUTER DIAM. PLUS MANHOLE WALL THICKNESS. SEE MANHOLE DIMENSION TABLE BELOW.
6. MANHOLE RINGS AND COVERS SHALL BE IN ACCORDANCE WITH SEC. 7.05 AND MEET THE STRENGTH REQUIREMENTS OF FEDERAL SPECIFICATION RR-F-621D. MATING SURFACES SHALL BE FINISHED TO ASSURE NON-ROCKING FIT WITH ANY COVER POSITION.
7. ALL BASE REINFORCING STEEL SHALL HAVE A MIN. YIELD STRENGTH OF 60,000 PSI AND BE PLACED IN THE UPPER HALF OF THE BASE WITH 1" MIN. CLEARANCE.
8. FOR HEIGHTS OF 12' OR LESS, MIN. SOIL BEARING VALUE SHALL EQUAL 3,300 POUNDS PER SQUARE FOOT. FOR HEIGHTS OVER 12', MIN. SOIL BEARING VALUE SHALL EQUAL 3,800 POUNDS PER SQUARE FOOT.
9. FOR DETAILS SHOWING GRADE RING, LADDER, STEPS, HANDHOLDS, AND TOP SLABS, SEE PLAN NO. D1.5, "MANHOLE DETAILS."
10. INSIDE DROP MAXIMUM TO BE 4' VERTICAL DISTANCE I.E. TO I.E.
11. KNOCKOUTS TO BE USED WHEN STUB OUT PIPE IS 3' OR LESS.
12. MINIMUM 0.20' FALL BETWEEN INLET AND OUTLET, ANY REDUCTION IN THIS DESIGN REQUIREMENT MUST BE APPROVED BY REVIEWING AUTHORITY.
13. SEE THE WSDOT/APWA STANDARD SPECIFICATIONS SEC. 7-05.3 FOR JOINT REQUIREMENTS.

Department of Public Works — CLARK COUNTY WASHINGTON — proud past, promising future
COUNTY ENGINEER — STANDARD MANHOLE TYPE 1 48", 54", & 60" — APPROVED — 01/01/04 DATE — STANDARD PLAN No. D1.1 — DESIGNED SCH — DRAWN SCH — DATE 07/07/03 — DWG: D1-1.DWG

STANDARD TYPE 1 CURB INLET (STANDARD PLAN No. D2.0)

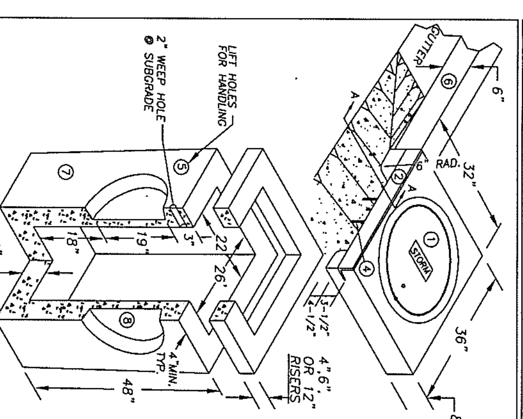

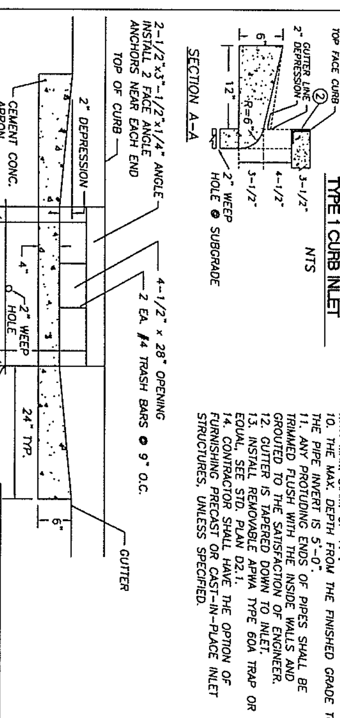

① 24" CAST IRON LOCKING FRAME & COVER
② 2 1/2"x3 1/2"x1/4"x 35 7/8" GALVANIZED ANGLE IRON
③ 2"x2 1/2"x1/4"x33" GALVANIZED ANGLE IRON
④ 2 EA. #4 TRASH BARS @ 9" O.C.
⑤ 2 EA. BASE UNIT LIFT HOLES
⑥ 6" CURB AND 12" GUTTERS
⑦ STANDARD TYPE 1 BASE UNIT
⑧ PIPE KNOCKOUTS ALL FOUR SIDES.

NOTES:

1. CURB INLET TO BE CONSTRUCTED IN ACCORDANCE WITH ASTM C478 & C890 UNLESS SHOWN ON PLANS OR NOTED IN STANDARD SPECIFICATIONS.
2. REINFORCING FOR TOP UNIT, 2 EA. #3 HORZONTAL BARS.
3. REINFORCING FOR INLET UNIT, 3 EA. #4 HORZONTAL BARS.
4. ALL REBAR TO MEET ASTM A615 GRADE 60.
5. AS AN ACCEPTABLE ALTERNATIVE TO REBAR, WELDED WIRE FABRIC HAVING A MIN. AREA OF 0.12 SQAURE INCHES PER FOOT MAY BE USED. WELDED WIRE FABRIC SHALL COMPLY TO ASTM A497. WIRE FABRIC SHALL NOT BE PLACED IN KNOCKOUTS.
6. ALL REINFORCED CAST-IN-PLACE CONCRETE SHALL BE CLASS 4,000.
7. PRECAST BASES SHALL BE FURNISHED WITH CUTOUTS OR KNOCKOUTS. KNOCKOUTS SHALL HAVE A WALL THICKNESS OF 2" MIN. ALL PIPE SHALL BE INSTALLED IN FACTORY PROVIDED KNOCKOUTS. UNUSED KNOCKOUTS NEED NOT BE GROUTED IF WALL IS LEFT INTACT.
8. KNOCKOUTS OR CUTOUT HOLE SIZE IS EQUAL TO PIPE OUTER DIAM. PLUS INLET WALL THICKNESS.
9. ROUND KNOCKOUTS MAY BE ON ALL 4 SIDES WITH MAX. DIAM. OF 17".
10. THE MAX. DEPTH FROM THE FINISHED GRADE TO THE PIPE INVERT IS 5'-0".
11. ANY PROTUDING ENDS OF PIPES SHALL BE TRIMMED FLUSH WITH THE INSIDE WALLS AND GROUTED TO THE SATISFACTION OF ENGINEER.
12. GUTTER IS TAPERED DOWN TO INLET.
13. INSTALL REMOVABLE APWA TYPE 60A TRAP OR EQUAL, SEE STD. PLAN D2.1.
14. CONTRACTOR SHALL HAVE THE OPTION OF FURNISHING PRECAST OR CAST-IN-PLACE INLET STRUCTURES, UNLESS SPECIFIED.

Department of Public Works — CLARK COUNTY WASHINGTON — proud past, promising future
COUNTY ENGINEER — STANDARD TYPE 1 CURB INLET — APPROVED — 01/01/04 DATE — STANDARD PLAN No. D2.0 — DESIGNED SCH — DRAWN SCH — DATE 09/09/02 — DWG: D2-0.DWG

STANDARD MANHOLE FRAME AND COVER (STANDARD PLAN No. D1.6)

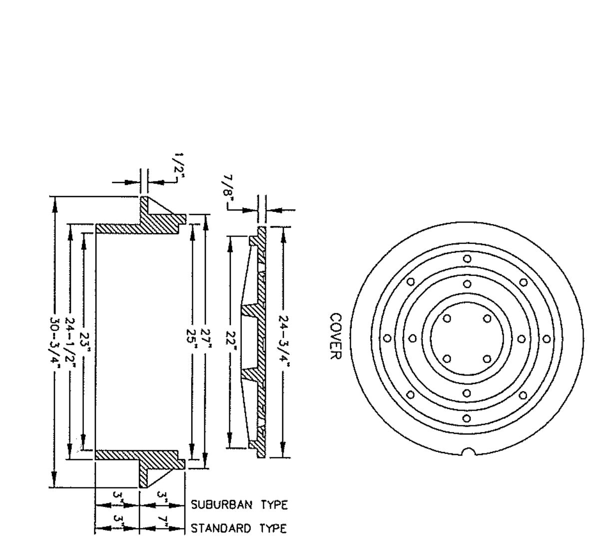

NOTES:

1. USE SUBURBAN TYPE ONLY IN NON-TRAFFIC AREAS, AND ONLY WITH APPROVAL BY COUNTY.
2. COVER MATERIAL TO BE DUCTILE IRON ASTM A536 GRADE 80-55-06
3. FRAME MATERIAL TO BE GRAY CAST IRON ASTM A-48 CLASS 30.
4. SEE WSDOT STANDARD SPECIFICATIONS SEC. 7.05
5. COVER AND FRAME TO BE MACHINED TO A TRUE BEARING ALL AROUND.
6. NOTCH LID FOR LIFTING HOOK.

Department of Public Works — CLARK COUNTY WASHINGTON — proud past, promising future
COUNTY ENGINEER — STANDARD MANHOLE FRAME AND COVER — APPROVED — 01/01/04 DATE — STANDARD PLAN No. D1.6 — DESIGNED SCH — DRAWN SCH — DATE 09/04/02 — DWG: D1-6.DWG

CATCH BASIN GUTTER PAN (STANDARD PLAN No. D4.1)

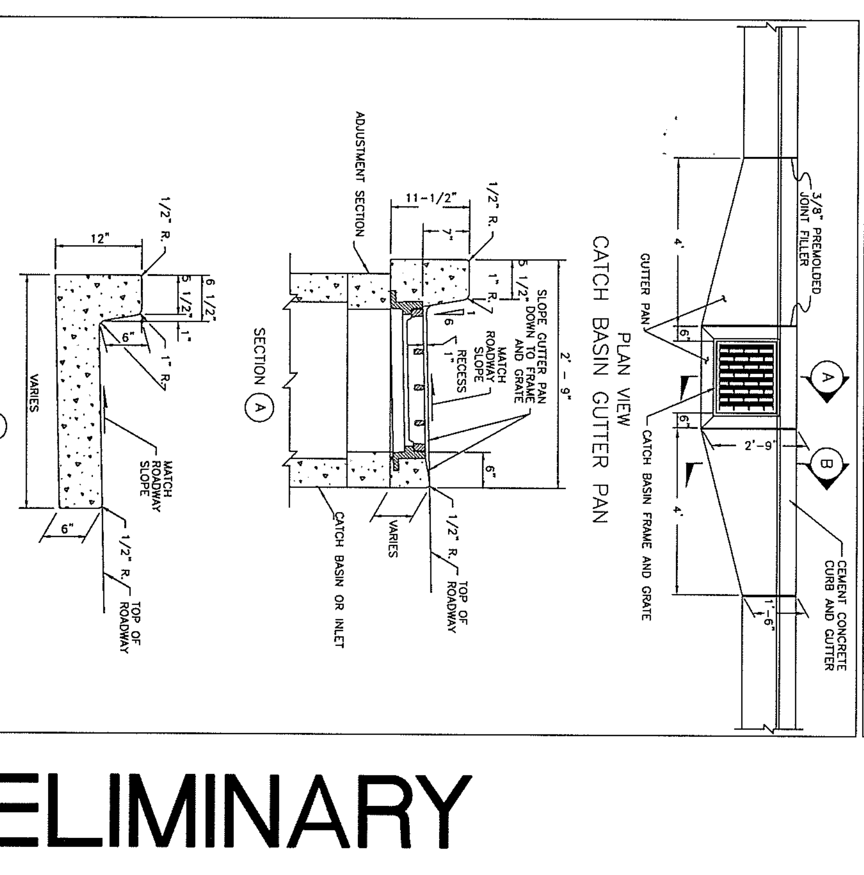

Department of Public Works — CLARK COUNTY WASHINGTON — proud past, promising future
COUNTY ENGINEER — CATCH BASIN GUTTER PAN — APPROVED — 01/01/04 DATE — STANDARD PLAN No. D4.1 — DESIGNED SCH — DRAWN SCH — DATE 07/07/03 — DWG: D4-1.DWG

STANDARD TYPE 1 COMBINATION CURB INLET (STANDARD PLAN No. D3.0)

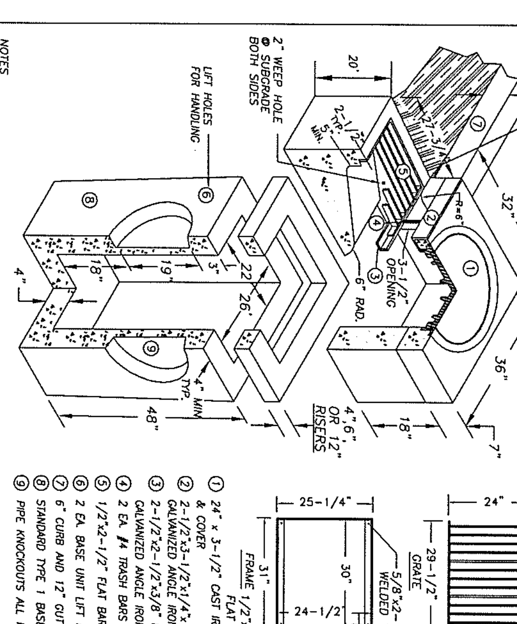

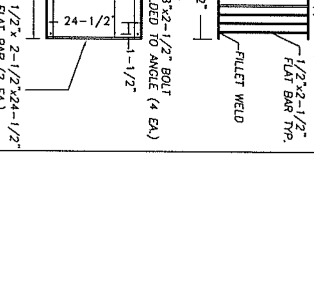

① 24" x 3-1/2" CAST IRON LOCKING FRAME & COVER
② 2-1/2"x3-1/2"x1/4"x 35 7/8" GALVANIZED ANGLE IRON
③ 2-1/2"x2-1/2"x3/8" FRAME GALVANIZED ANGLE IRON
④ 2 EA. #4 TRASH BARS @ 8" O.C.
⑤ 1/2"x2-1/2" FLAT BAR GALVANIZED GRATE
⑥ 2 EA. BASE UNIT LIFT HOLES
⑦ 6" CURB AND 12" GUTTERS
⑧ STANDARD TYPE 1 BASE UNIT
⑨ PIPE KNOCKOUTS ALL FOUR SIDES.

NOTES

1. COMBINATION CURB INLET TO BE CONSTRUCTED IN ACCORDANCE WITH ASTM C478 & C890 UNLESS SHOWN ON PLANS OR NOTED IN STANDARD SPECIFICATIONS.
2. REINFORCING FOR INLET UNIT, 3 EA. #4 HORZONTAL BARS; REINFORCING FOR TOP UNIT, 2 EA. #3 HORZONTAL BARS; REINFORCING FOR INLET SLOPED BASE, 4x4 MESH.
3. ALL REBAR TO MEET ASTM A615 GRADE 60.
4. AS AN ACCEPTABLE ALTERNATIVE TO REBAR, WELDED WIRE FABRIC HAVING A MIN. AREA OF 0.12 SQAURE INCHES PER FOOT MAY BE USED. WELDED WIRE FABRIC SHALL COMPLY TO ASTM A497. WIRE FABRIC SHALL NOT BE PLACED IN KNOCKOUTS.
5. ALL REINFORCED CAST-IN-PLACE CONCRETE SHALL BE CLASS 4,000.
6 PRECAST BASES SHALL BE FURNISHED WITH CUTOUTS OR KNOCKOUTS. KNOCKOUTS SHALL HAVE A WALL THICKNESS OF 2" MIN. ALL PIPE SHALL BE INSTALLED IN FACTORY PROVIDED KNOCKOUTS. UNUSED KNOCKOUTS NEED NOT BE GROUTED IF WALL IS LEFT INTACT.
7. KNOCKOUTS OR CUTOUT HOLE SIZE IS EQUAL TO PIPE OUTER DIAM. PLUS INLET WALL THICKNESS.
8. ROUND KNOCKOUTS MAY BE ON ALL 4 SIDES WITH MAX. DIAM. OF 17".
9. THE MAX. DEPTH FROM THE FINISHED GRADE TO THE PIPE INVERT IS 5'-0".
10. ANY PROTUDING ENDS OF PIPES SHALL BE TRIMMED FLUSH WITH THE INSIDE WALLS AND GROUTED TO THE SATISFACTION OF ENGINEER.
11. GRATE TO HAVE 1" DEPRESSION AT GUTTER INLET WITH GUTTER TO BE TAPERED DOWN TO INLET.
12. INSTALL REMOVABLE APWA TYPE 60A TRAP OR EQUAL, SEE STD. PLAN D2.1.
13. CONTRACTOR SHALL HAVE THE OPTION OF FURNISHING PRECAST OR CAST-IN-PLACE INLET STRUCTURES, UNLESS SPECIFIED.
14. SEE STD. PLAN 4.1 FOR BASIN GUTTER PAN DETAIL.

Department of Public Works — CLARK COUNTY WASHINGTON — proud past, promising future
COUNTY ENGINEER — STANDARD TYPE 1 COMBINATION CURB INLET — APPROVED — 01/01/04 DATE — STANDARD PLAN No. D3.0 — DESIGNED SCH — DRAWN SCH — DATE 09/09/02 — DWG: D3-0.DWG

PRELIMINARY

CLARK COUNTY WASHINGTON — proud past, promising future

DESIGN & ENGINEERING DIVISION
DESIGN SECTION

NW 119TH / 117TH STREET
DRAINAGE DETAILS

MICHAEL M. EMRICK — STATE OF WASHINGTON — 29030 REGISTERED PROFESSIONAL ENGINEER — EXPIRES: MAY 26, 2005

CALL 48 HOURS BEFORE YOU DIG
1-800-553-4344
"It's the Law"
NORTHWEST UTILITIES NOTIFICATION CENTER

DESIGNED	MME
DRAWN	BAK
CRP	381022
HOR.	NA
VERT.	NA
DATE	10/20/01
DWG:	DD1
SHEET	OF

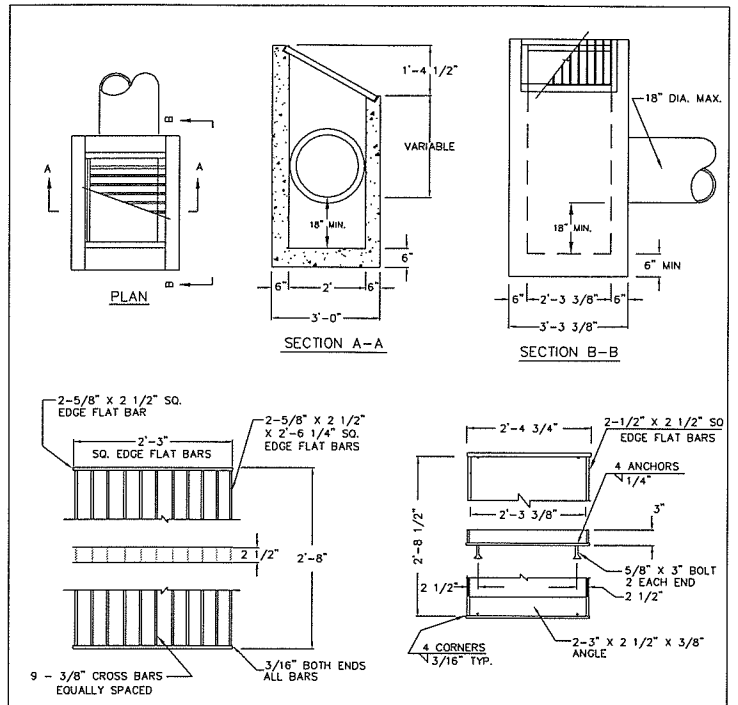

NOTES:

1. DITCH INLET CONSTRUCTION IN ACCORDANCE WITH ASTM C-478
2. CATCH BASIN, FRAME, AND GRATES SHALL BE FLAT BAR STEEL OR APPROVED EQUAL.
3. INSIDE FRAME DIMENSIONS: 2'-3 3/8"x 2'-8 1/2"".
4. 3/8" CROSS BARS SHALL BE FLUSH WITH THE GRATE SURFACE AND MAY BE FILLET WELDED, RESISTANCE WELDED OR ELECTROFORGED TO BEARING BARS.

NO.	REVISIONS	DATE	BY

DWG: D6.DWG

Department of Public Works
CLARK COUNTY WASHINGTON
proud past, promising future

DITCH INLET

APPROVED — Peter Capen, COUNTY ENGINEER — 01/01/04 DATE

STANDARD D6 — PLAN No. — DESIGNED SCH — DRAWN SCH — DATE 09/17/02

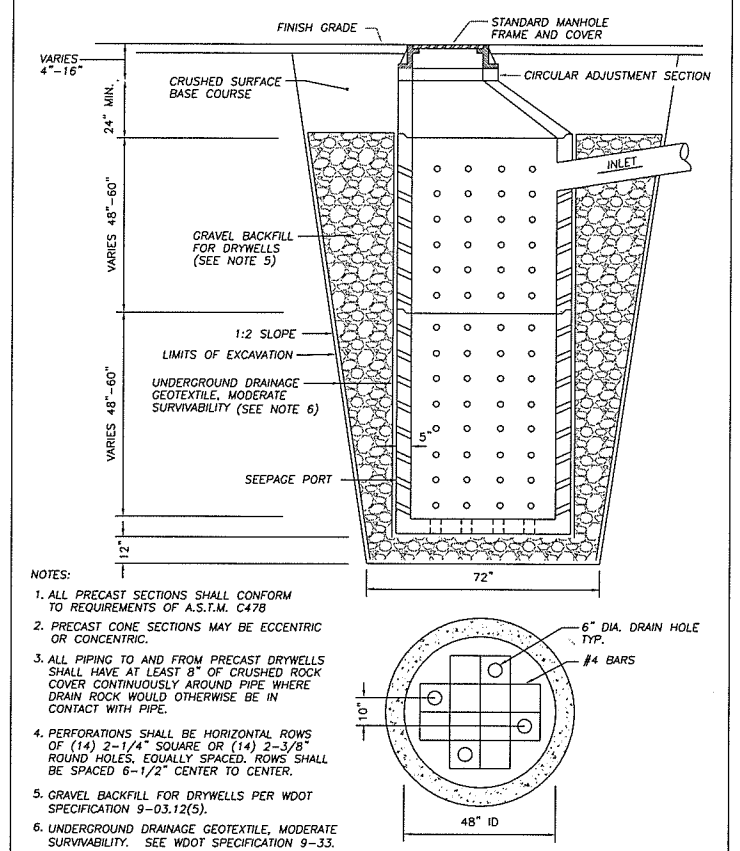

NOTES:

1. ALL PRECAST SECTIONS SHALL CONFORM TO REQUIREMENTS OF A.S.T.M. C478
2. PRECAST CONE SECTIONS MAY BE ECCENTRIC OR CONCENTRIC.
3. ALL PIPING TO AND FROM PRECAST DRYWELLS SHALL HAVE AT LEAST 8" OF CRUSHED ROCK COVER CONTINUOUSLY AROUND PIPE WHERE DRAIN ROCK WOULD OTHERWISE BE IN CONTACT WITH PIPE.
4. PERFORATIONS SHALL BE HORIZONTAL ROWS OF (14) 2-1/4" SQUARE OR (14) 2-3/8" ROUND HOLES, EQUALLY SPACED. ROWS SHALL BE SPACED 6-1/2" CENTER TO CENTER.
5. GRAVEL BACKFILL FOR DRYWELLS PER WDOT SPECIFICATION 9-03.12(5).
6. UNDERGROUND DRAINAGE GEOTEXTILE, MODERATE SURVIVABILITY. SEE WDOT SPECIFICATION 9-33.
7. TYPICAL DRYWELL DEPTH IS 13'

NO.	REVISIONS	DATE	BY

DWG: D10.DWG

Department of Public Works
CLARK COUNTY WASHINGTON
proud past, promising future

PRECAST DRYWELL

APPROVED — Peter Capen, COUNTY ENGINEER — 01/01/04 DATE

STANDARD D10 — PLAN No. — DESIGNED SCH — DRAWN SCH — DATE 09/23/02

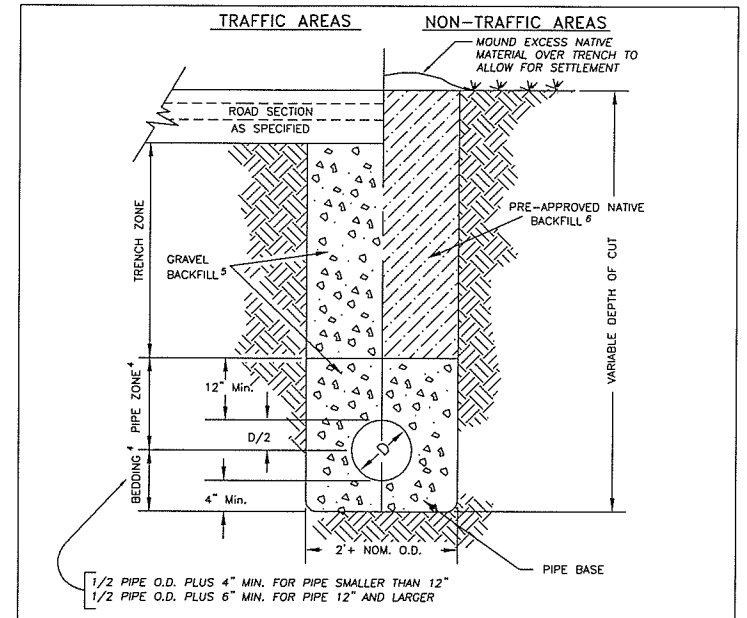

NOTES

1. FOR INSTALLATION OF DRAINAGE PIPE IN NEW DEVELOPMENT.
2. GENERAL PIPE INSTALLATION REQUIREMENTS SHALL BE PER SECTION 7-08 WSDOT SPECS.
3. TRENCH BACK FILL SHALL CONFORM TO CCC 40.350.030(C)(4)(e).
4. PIPE ZONE AND BEDDING MATERIAL SHALL CONFORM TO SECTION 9-03.12(3) WSDOT SPECS.
5. GRAVEL BACKFILL PER WSDOT SPECIFICATION SECTION 9-03.19, AND COMPACTED TO 95% MAX. DENSITY (AASHTO T-99). NATIVE SOILS MAY BE USED UPON APPROVAL BY REVIEWING AUTHORITY IF TESTING SHOWS MATERIAL IS CLASSIFIED AS A-1 OR A-3 BY AASHTO.
6. OUTSIDE THE ROADWAY PRISM, SUITABLE NATIVE BACKFILL SHALL BE COMPACTED TO 90% MAX. DENSITY (AASHTO T-99).
7. ALL COMPACTION SHALL BE IN ACCORDANCE WITH THE COMPACTION CONTROL TEST OF SECTION 2-03.3(14)D.

NO.	REVISIONS	DATE	BY

DWG: D14.DWG

Department of Public Works
CLARK COUNTY WASHINGTON
proud past, promising future

PIPE BEDDING AND BACKFILL DETAIL

APPROVED — Peter Capen, COUNTY ENGINEER — 01/01/04 DATE

STANDARD D14 — PLAN No. — DESIGNED SCH — DRAWN SCH — DATE 6/14/03

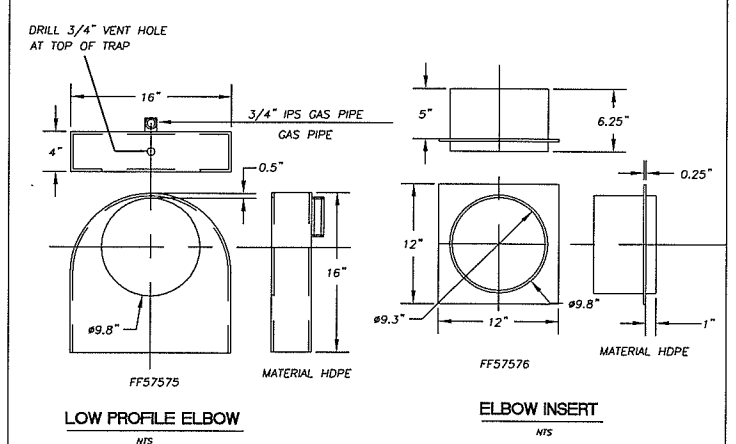

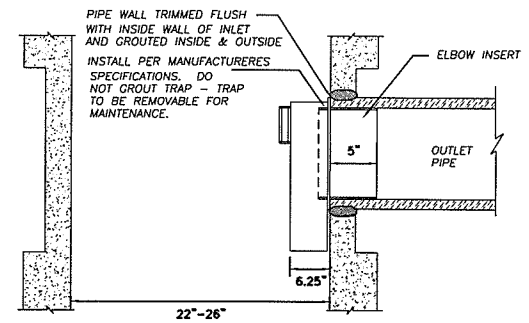

NO.	REVISIONS	DATE	BY

DWG: D2-1.DWG

Department of Public Works
CLARK COUNTY WASHINGTON
proud past, promising future

CATCH BASIN OUTLET PIPE TRAP

APPROVED — Peter Capen, COUNTY ENGINEER — 01/01/04 DATE

STANDARD D2.1 — PLAN No. — DESIGNED SCH — DRAWN SCH — DATE 09/23/02

PRELIMINARY

DESIGNED	MME
DRAWN	BAK
CRP	381022
HOR.	NA
VERT.	NA
DATE	10/20/01
DWG:	DD2
SHEET	OF

CALL 48 HOURS BEFORE YOU DIG 1-800-553-4344 "It's the Law" NORTHWEST UTILITIES NOTIFICATION CENTER

STATE OF WASHINGTON — MICHAEL M. ELDRICK — 29600 — REGISTERED PROFESSIONAL ENGINEER — EXPIRES: MAY 26, 2005

DESIGN & ENGINEERING DIVISION
DESIGN SECTION

NW 119TH / 117TH STREET
DRAINAGE DETAILS

proud past, promising future
CLARK COUNTY WASHINGTON

N:\CIP\PROJECTS\381022-NW117-119\DESIGN\DWGS\119DD1-2.dwg, Layout2, 10/1/2004 2:54:21 PM, begleyk

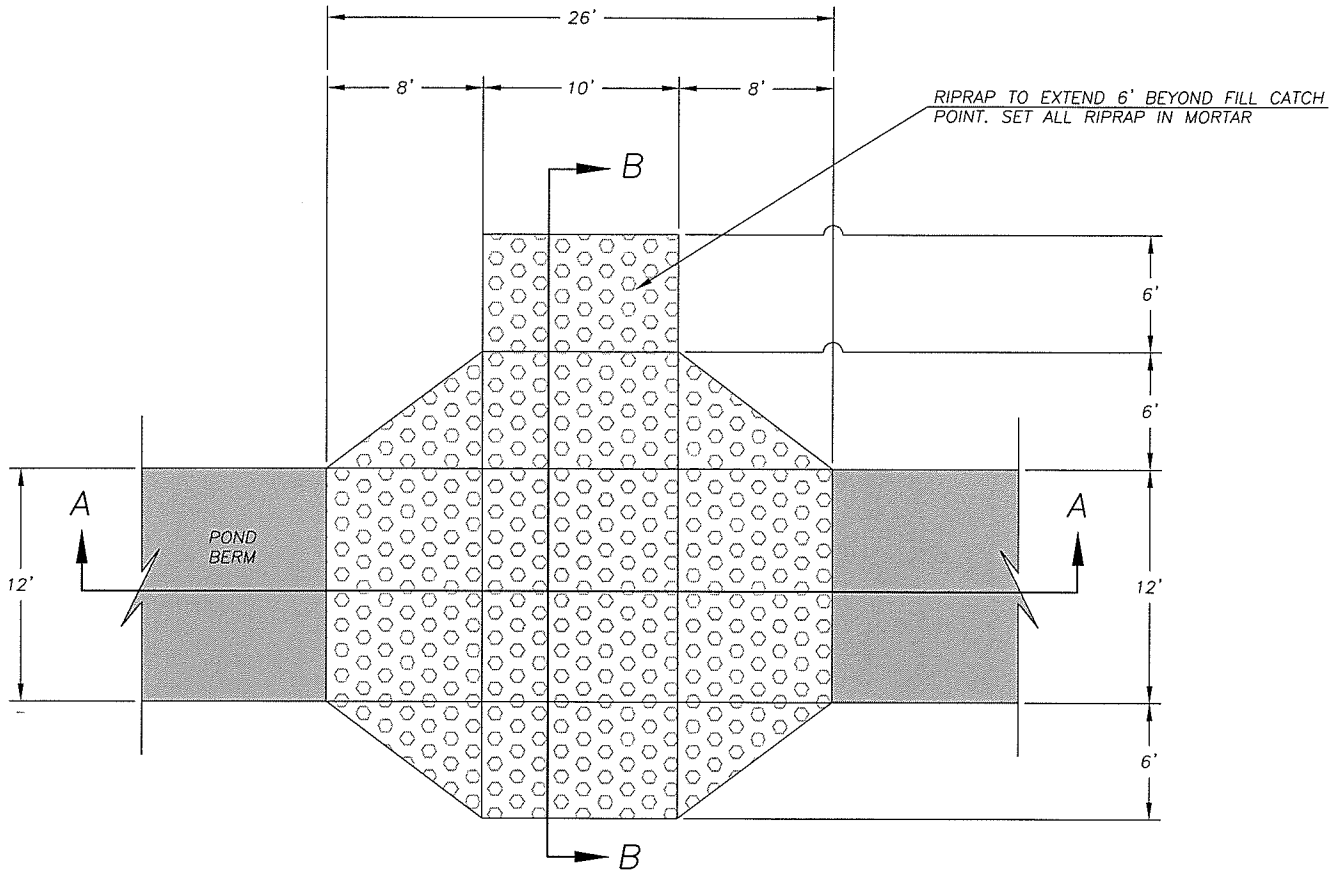

PLAN VIEW
NTS

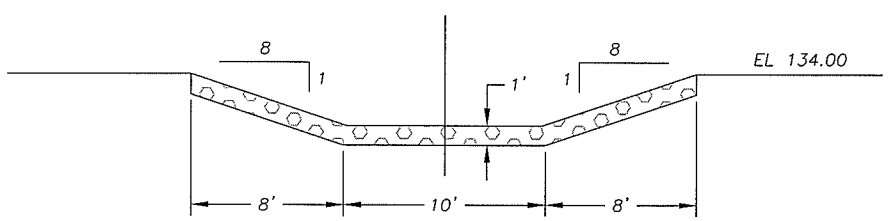

SECTION A–A
NTS

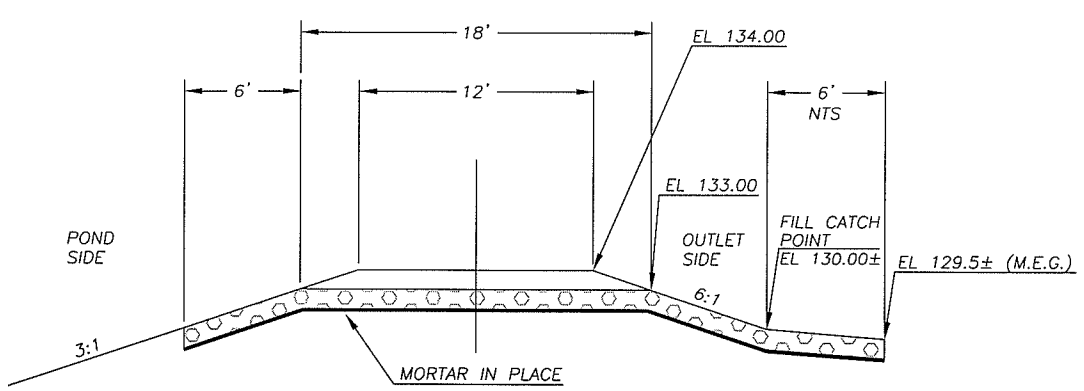

SECTION B–B
NTS

OVERFLOW WEIR SWCF #1

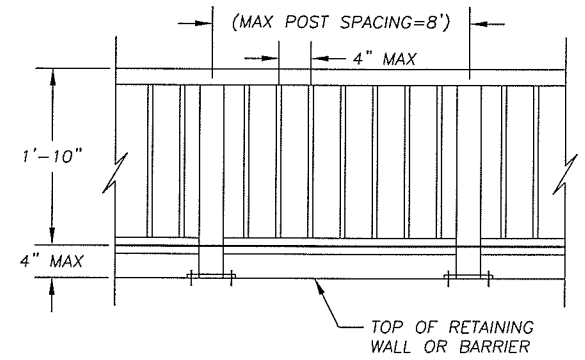

HANDRAIL FOR WALL DETAIL

HANDRAIL FOR WALL SHALL MEET THE REQUIREMENTS OF THE GENERAL HANDRAIL SPECIFICATION OF THE 1997 UNIFORM BUILDING CODE.

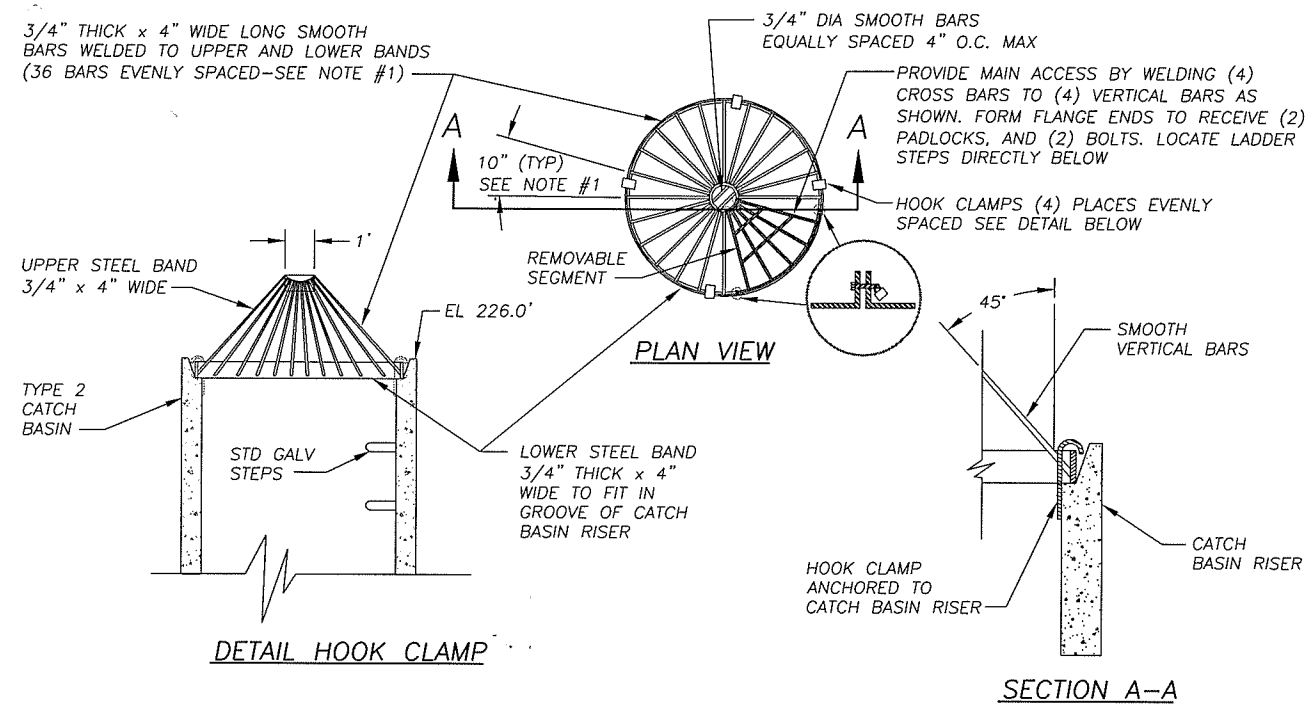

DROP INLET TRASH RACK
NTS

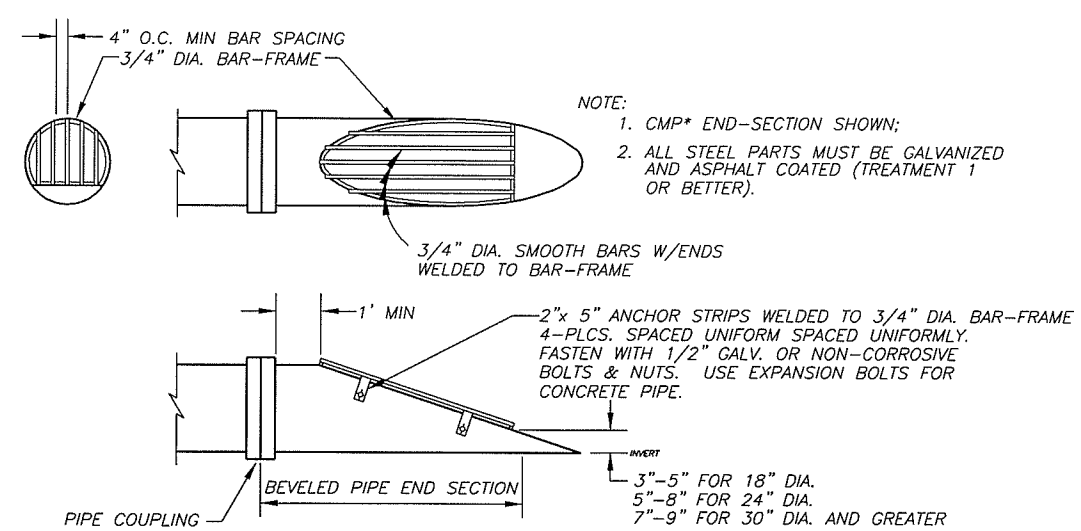

NOTE:
1. CMP* END–SECTION SHOWN;
2. ALL STEEL PARTS MUST BE GALVANIZED AND ASPHALT COATED (TREATMENT 1 OR BETTER).

DEBRIS RACK

DESIGNED	GAS
DRAWN	KB
CRP	381022
HOR.	NA
VERT.	NA
DATE	10/11/01
DWG:	DD3
SHEET	OF

CALL 48 HOURS BEFORE YOU DIG 1-800-553-4344 "It's the Law" NORTHWEST UTILITIES NOTIFICATION CENTER

STATE OF WASHINGTON MILLIE A. SIMS 31148 REGISTERED PROFESSIONAL ENGINEER EXPIRES: JULY 2, 2005

DESIGN & ENGINEERING DIVISION
DESIGN SECTION

NW 119TH / 117TH STREET
DRAINAGE DETAILS

proud past, promising future
CLARK COUNTY WASHINGTON

N:\CIP\PROJECTS\381022-NW117-119\DESIGN\DWGS\119DD3.dwg, Layout1, 10/1/2004 2:58:49 PM, begleyk

N:\CIP\PROJECTS\381022-NW117-119\DESIGN\DWGS\119B01-2.dwg, Layout1, 10/4/2004 2:32:57 PM, begleyk

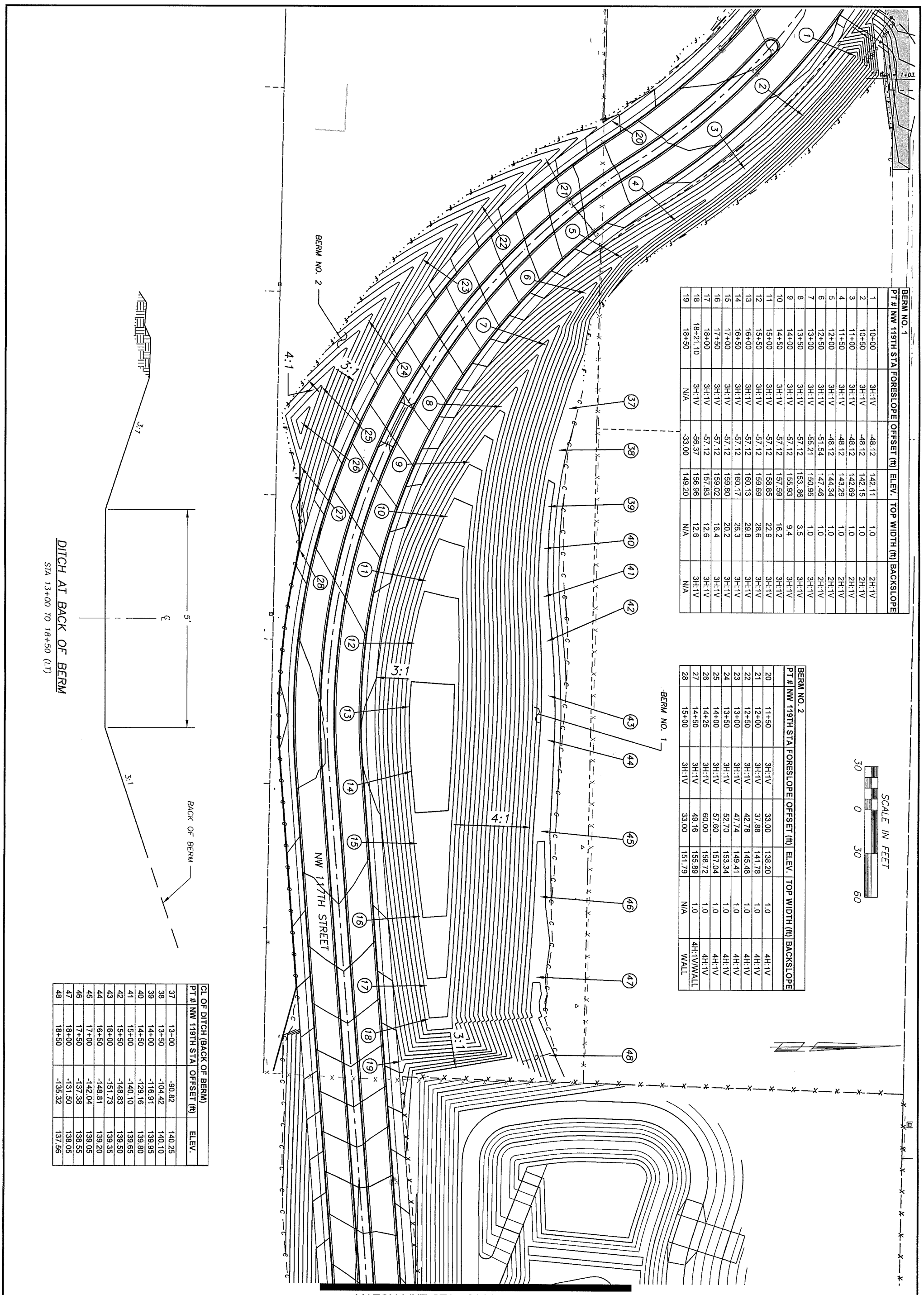

BERM NO. 1

PT #	NW 119TH STA	FORESLOPE	OFFSET (ft)	ELEV.	TOP WIDTH (ft)	BACKSLOPE
1	10+00	3H:1V	-48.12	142.11	1.0	2H:1V
2	10+50	3H:1V	-48.12	142.15	1.0	2H:1V
3	11+00	3H:1V	-48.12	142.69	1.0	2H:1V
4	11+50	3H:1V	-48.12	143.29	1.0	2H:1V
5	12+00	3H:1V	-48.12	144.34	1.0	2H:1V
6	12+50	3H:1V	-51.54	147.46	1.0	2H:1V
7	13+00	3H:1V	-55.21	150.95	1.0	3H:1V
8	13+50	3H:1V	-57.12	153.86	3.5	3H:1V
9	14+00	3H:1V	-57.12	155.93	9.4	3H:1V
10	14+50	3H:1V	-57.12	157.59	16.2	3H:1V
11	15+00	3H:1V	-57.12	158.85	22.9	3H:1V
12	15+50	3H:1V	-57.12	159.69	28.6	3H:1V
13	16+00	3H:1V	-57.12	160.13	29.8	3H:1V
14	16+50	3H:1V	-57.12	160.17	26.3	3H:1V
15	17+00	3H:1V	-57.12	159.80	20.2	3H:1V
16	17+50	3H:1V	-57.12	159.02	16.4	3H:1V
17	18+00	3H:1V	-57.12	157.83	12.6	3H:1V
18	18+21.10	3H:1V	-56.37	156.96	12.6	3H:1V
19	18+50	N/A	-33.00	149.20	N/A	N/A

BERM NO. 2

PT #	NW 119TH STA	FORESLOPE	OFFSET (ft)	ELEV.	TOP WIDTH (ft)	BACKSLOPE
20	11+50	3H:1V	33.00	138.20	1.0	4H:1V
21	12+00	3H:1V	37.88	141.78	1.0	4H:1V
22	12+50	3H:1V	42.78	145.48	1.0	4H:1V
23	13+00	3H:1V	47.74	149.41	1.0	4H:1V
24	13+50	3H:1V	52.70	153.34	1.0	4H:1V
25	14+00	3H:1V	57.60	157.04	1.0	4H:1V
26	14+25	3H:1V	60.00	158.72	1.0	4H:1V
27	14+50	3H:1V	49.16	155.89	1.0	4H:1V/WALL
28	15+00	3H:1V	33.00	151.79	N/A	WALL

CL OF DITCH (BACK OF BERM)

PT #	NW 119TH STA	OFFSET (ft)	ELEV.
37	13+00	-90.82	140.25
38	13+50	-104.42	140.10
39	14+00	-116.91	139.95
40	14+50	-129.16	139.80
41	15+00	-140.10	139.65
42	15+50	-148.83	139.50
43	16+00	-151.73	139.35
44	16+50	-148.81	139.20
45	17+00	-142.04	139.05
46	17+50	-137.38	138.55
47	18+00	-131.50	138.05
48	18+50	-135.32	137.56

DITCH AT BACK OF BERM
STA 13+00 TO 18+50 (LT)

CLARK COUNTY WASHINGTON
proud past, promising future

DESIGN & ENGINEERING DIVISION
DESIGN SECTION

NW 119TH / 117TH STREET BERMS

MICHAEL M. EMRICK, STATE OF WASHINGTON, 29030, REGISTERED PROFESSIONAL ENGINEER
EXPIRES: MAY 26, 2005

CALL 48 HOURS BEFORE YOU DIG
1-800-553-4344
"It's the Law"
NORTHWEST UTILITIES NOTIFICATION CENTER

DESIGNED	MME
DRAWN	KB
CRP	381022
HOR.	1"=30'
VERT.	NA
DATE	1/10/03
DWG:	B01
SHEET	OF

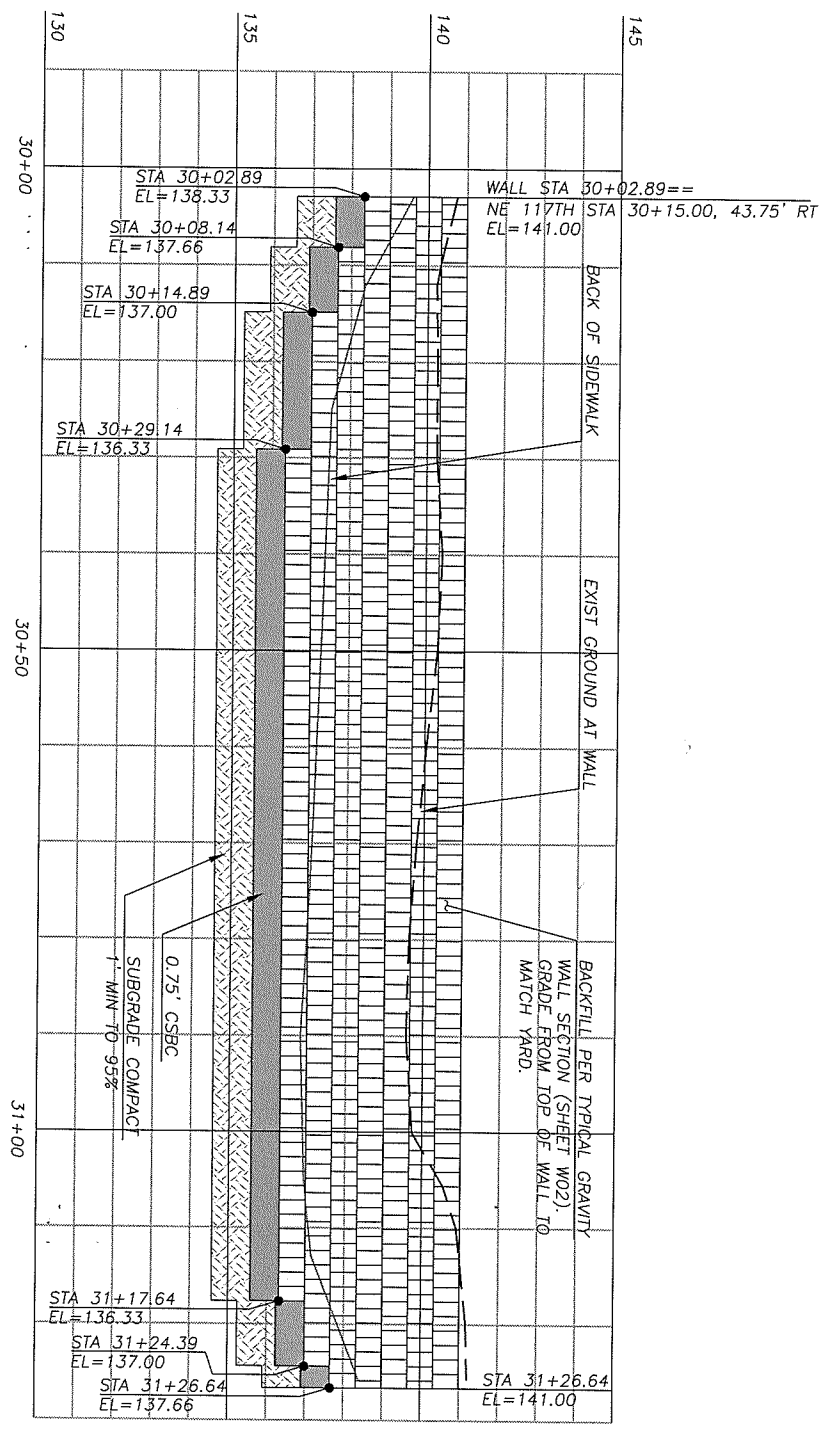

3RD AVENUE WALL
(STANDARD UNITS)
SEE SHEET PP06 FOR PLAN VIEW

proud past, promising future
CLARK COUNTY
WASHINGTON

DESIGN & ENGINEERING DIVISION
DESIGN SECTION

NW 119TH / 117TH STREET
NE 3RD AVENUE RETAINING WALL

MICHAEL M. ENRICK
STATE OF WASHINGTON
29030
REGISTERED
PROFESSIONAL ENGINEER
EXPIRES:MAY 26, 2005

CALL 48 HOURS BEFORE YOU DIG
1-800-553-4344
"It's the Law"
NORTHWEST UTILITIES NOTIFICATION CENTER

DESIGNED	MME
DRAWN	BAK
CRP	381022
HOR.	1"=10'
VERT.	1"=2.5'
DATE	1/29/03
DWG:	W01
SHEET	OF

Base Leveling Pad Notes:

1. The leveling pad is to be constructed of crushed stone or 2,000 psi± unreinforced concrete
2. The base foundation is to be approved by the site geotechnical engineer prior to placement of the leveling pad.

Standard Unit	
Width:	18"
*Depth:	21 1/2"
Height:	8"
*Weight:	115 lbs

Cap Unit	
Width:	18"
*Depth:	10 1/2"
Height:	4"
*Weight:	45 lbs

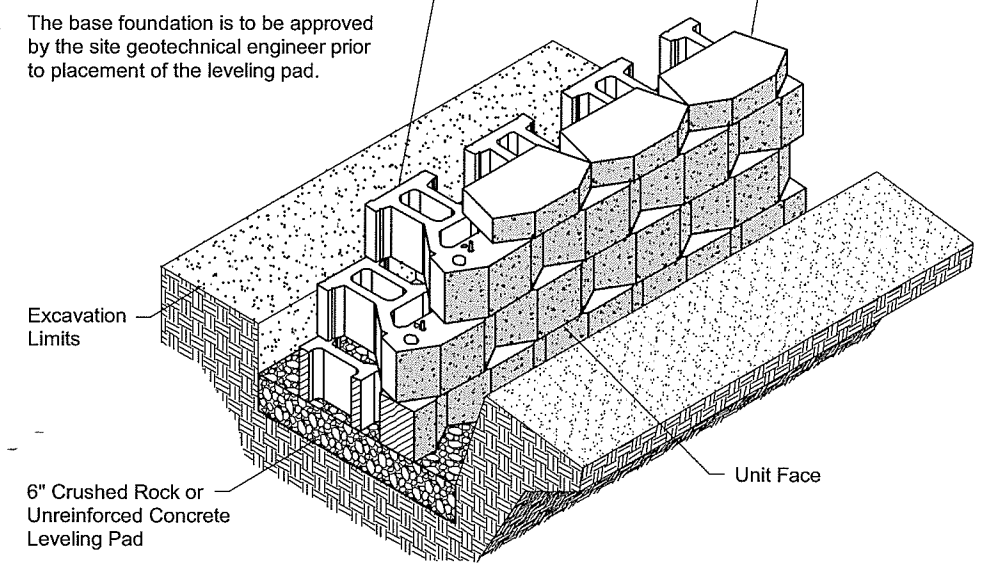

Standard Unit/Base Pad Isometric Section View

*Dimensions & Weight May Vary by Region

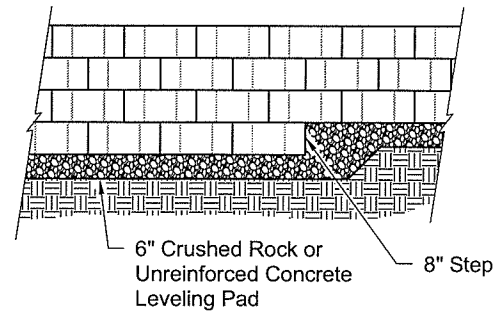

Elevation

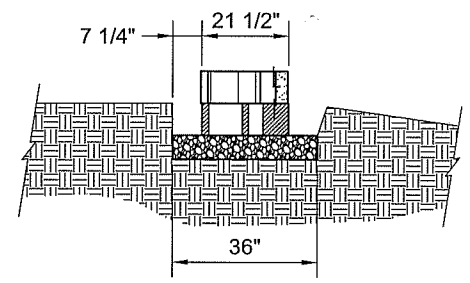

Section

Leveling Pad Detail

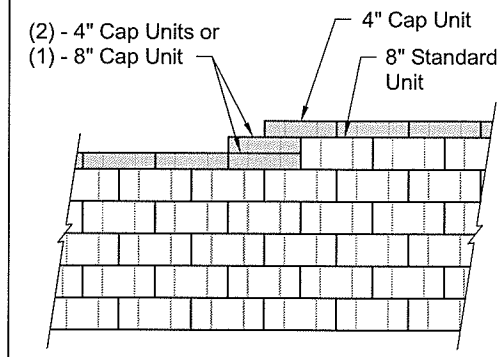

Top of Wall Steps

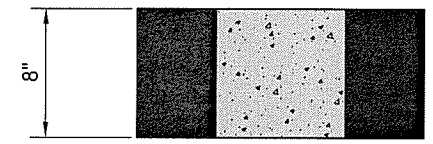

Standard Elevation

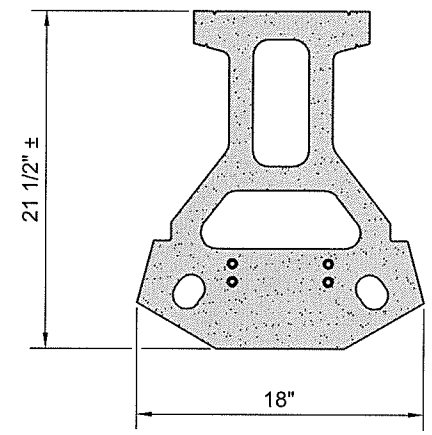

Standard Plan

Standard Unit

*Dimensions May Vary by Region

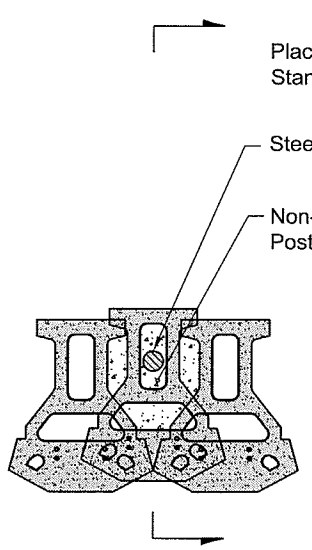

Fence Plan Detail

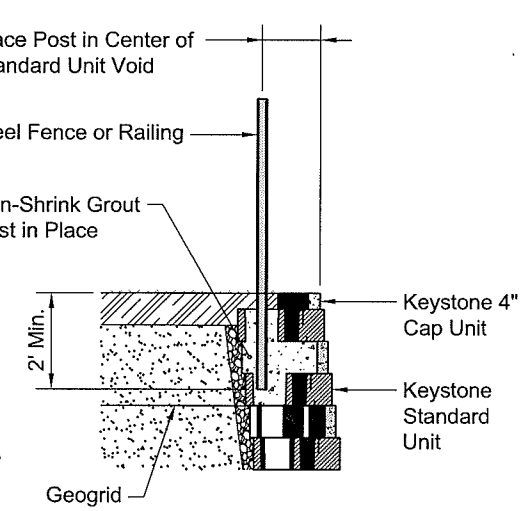

Fence SectionDetail

Standard Unit - 1" Setback

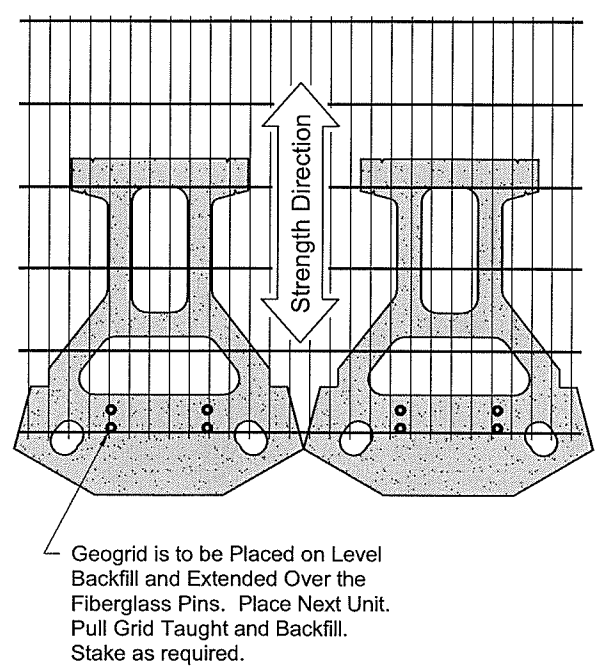

Grid & Pin Connection

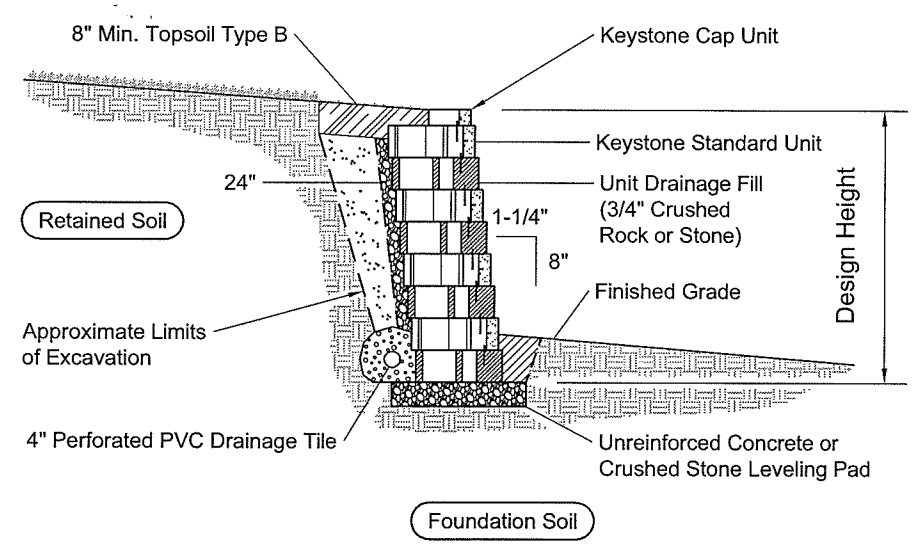

Typical Gravity Wall Section

Standard Unit - 1-1/4" Setback

GENERAL:
WRAP 4" PERFORATED PVC DRAINAGE TILE IN 3/4" AGGREGATE AND FILTER FABRIC AT TOE.

DESIGNED MME
DRAWN BAK
CRP 381022
HOR. 1"=5'
VERT. 1"=5'
DATE 5/3/04
DWG: W02
SHEET OF

CALL 48 HOURS BEFORE YOU DIG 1-800-553-4344 "It's the Law" NORTHWEST UTILITIES NOTIFICATION CENTER

MICHAEL M. EMRICK STATE OF WASHINGTON 29030 REGISTERED PROFESSIONAL ENGINEER EXPIRES MAY 26, 2005

DESIGN & ENGINEERING DIVISION
DESIGN SECTION

NW 119TH / 117TH STREET
NE 3RD AVENUE RETAINING WALL DETAILS

proud past, promising future
CLARK COUNTY WASHINGTON

N:\CIP\PROJECTS\381022-NW117-119\DESIGN\DWGS\119W02.dwg, 9/30/2004 10:12:47 AM, emrickm

N:\CIP\PROJECTS\381022-NW117-119\DESIGN\DWGS\119W03.dwg, Layout1, 10/4/2004 2:40:27 PM, begleyk

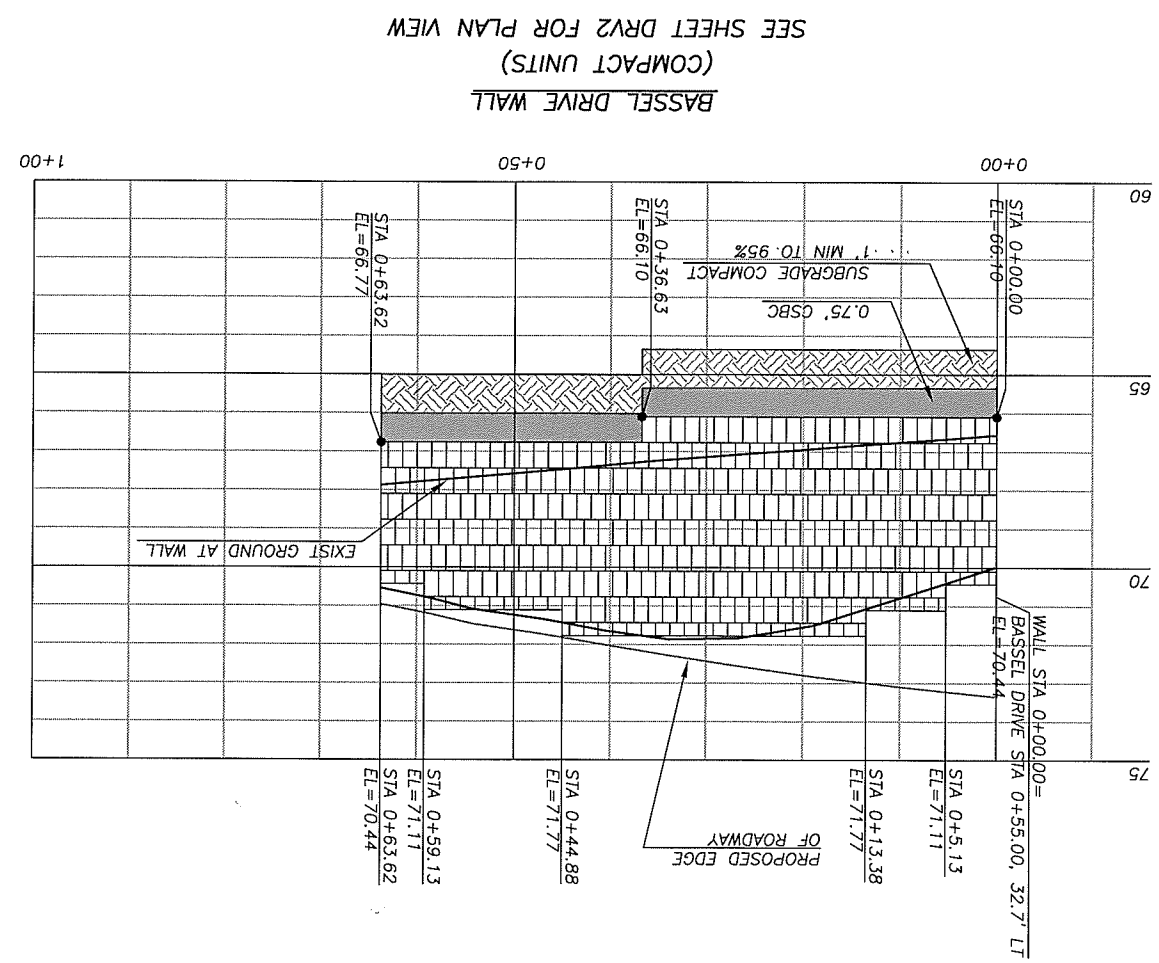

GEOGRID SCHEDULE

STATION RANGE	ELEV	LENGTH
0+5.13 TO 0+59.13	70.10	3.5'
0+00 TO 0+63.62	68.76	3.5'
0+00 TO 0+63.62	67.42	3.5'

CLARK COUNTY
WASHINGTON
proud past, promising future

DESIGN & ENGINEERING DIVISION
DESIGN SECTION

NW 119TH / 117TH STREET
BASSEL DRIVE RETAINING WALL

MICHAEL M. EMRICK
STATE OF WASHINGTON
PROFESSIONAL ENGINEER
EXPIRES MAY 26, 2005

CALL 48 HOURS BEFORE YOU DIG
1-800-553-4344
"It's the Low"
NORTHWEST UTILITIES NOTIFICATION CENTER

DESIGNED	MME
DRAWN	BAK
CRP	381022
HOR.	1"=5'
VERT.	1"=5'
DATE	1/29/03
DWG:	W03
SHEET	OF

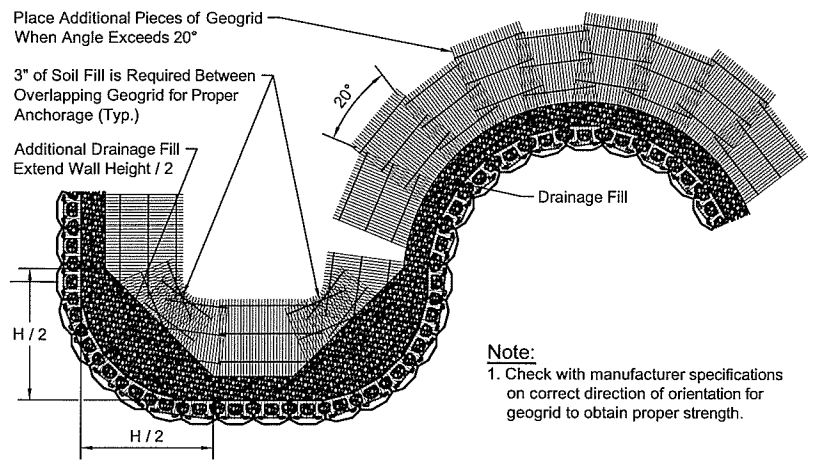

Note:
1. Check with manufacturer specifications on correct direction of orientation for geogrid to obtain proper strength.

Geogrid Installation on Curves

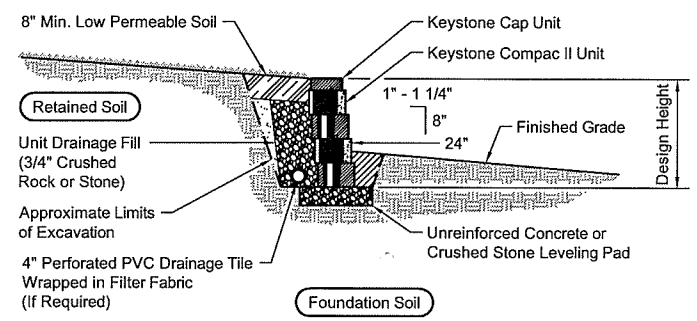

Typical Gravity Wall Section

Compac II Unit - 1" Setback

Base Leveling Pad Notes:

1. The leveling pad is to be constructed of crushed stone or 2,000 psi± unreinforced concrete
2. The base foundation is to be approved by the site geotechnical engineer prior to placement of the leveling pad.

Compac II Unit	
Width:	18"
*Depth:	12"
Height:	8"
*Weight:	82 lbs

Cap Unit	
Width:	18"
*Depth:	10 1/2"
Height:	4"
*Weight:	45 lbs

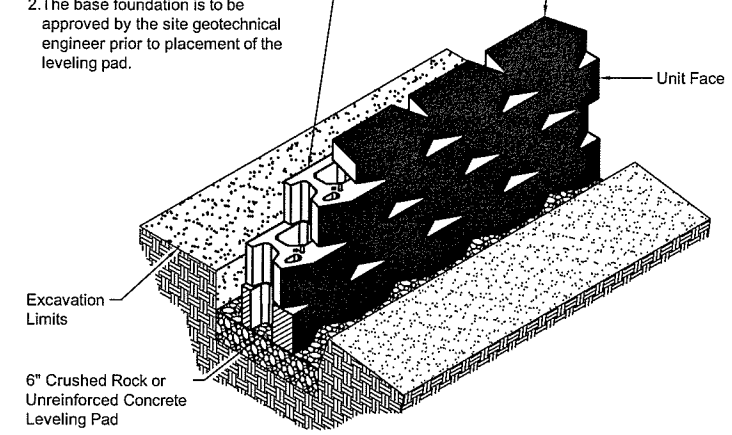

Compac II Unit/Base Pad Isometric Section View

* Dimensions & Weight May Vary by Region

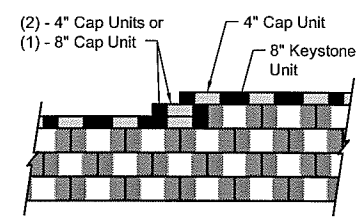

Note:
1. Secure all cap units with Keystone Kapseal or equal.

Top of Wall Steps

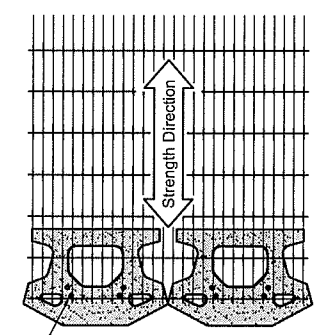

Geogrid is to be Placed on Level Backfill and Extended Over the Fiberglass Pins. Place Next Unit. Pull Grid Taught and Backfill. Stake as required.

Grid & Pin Connection

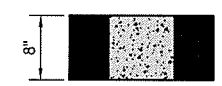

Compac II Elevation

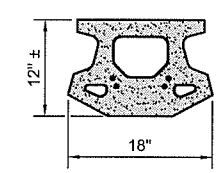

Compac II Plan

Compac II Unit

* Dimensions May Vary by Region

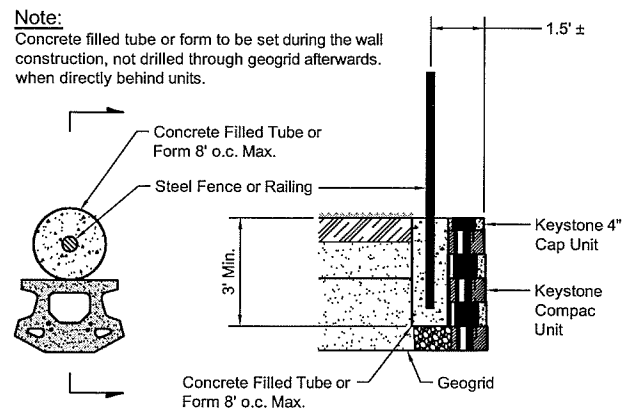

Fence Plan Detail

Fence Section & Plan Detail

CompacII Unit - Near Vertical Setback

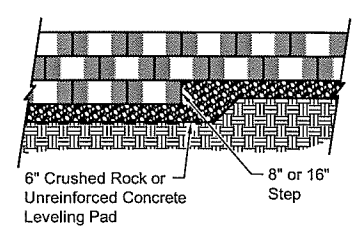

Elevation

Note:
1. The leveling pad is to be constructed of crushed stone or 2000 psi ± unreinforced concrete.

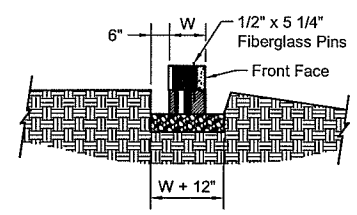

Section

Leveling Pad Detail

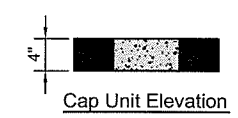

Cap Unit Elevation

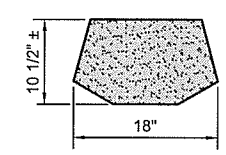

Cap Unit Plan

3-Plane Split Cap Unit Option

* Dimensions & Availability Will Vary by Region

DESIGNED	MME
DRAWN	BAK
CRP	381022
HOR.	NA
VERT.	NA
DATE	5/3/04
DWG:	W04
SHEET	OF

CALL 48 HOURS BEFORE YOU DIG 1-800-553-4344 "It's the Law" NORTHWEST UTILITIES NOTIFICATION CENTER

STEVEN M. EMRICK STATE OF WASHINGTON 40159 REGISTERED PROFESSIONAL ENGINEER EXPIRES MAY 28, 2005

DESIGN & ENGINEERING DIVISION
DESIGN SECTION

NW 119TH / 117TH STREET
BASSEL DRIVE RETAINING WALL DETAILS

CLARK COUNTY WASHINGTON
proud past, promising future

N:\CIP\PROJECTS\381022-NW117-119\DESIGN\DWGS\119W04.dwg, 9/30/2004 10:14:55 AM, emrickm

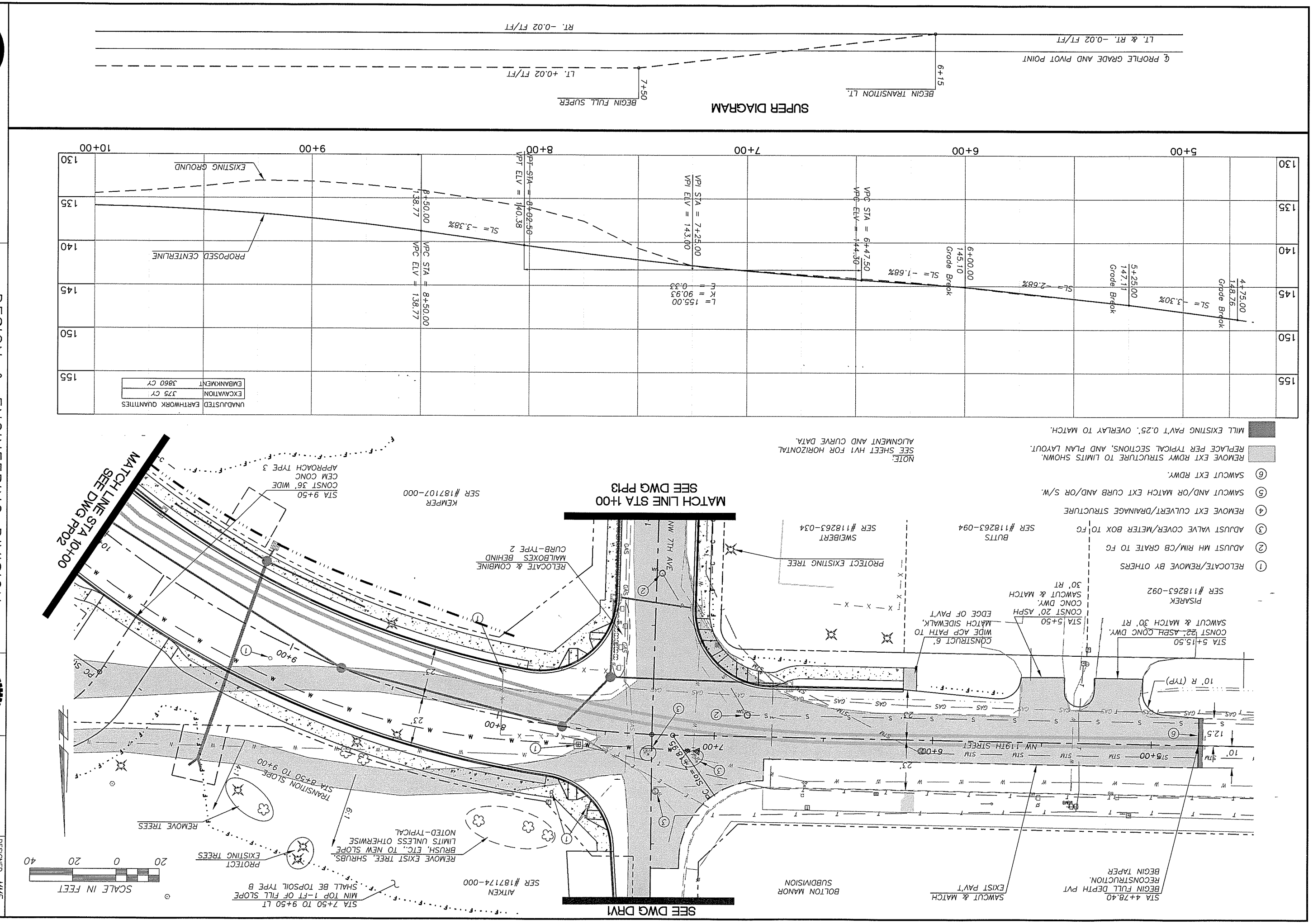

CLARK COUNTY
WASHINGTON

proud past, promising future

DESIGN & ENGINEERING DIVISION
DESIGN SECTION

NW 119TH / 117TH STREET
B.O.P. TO STA 10+00

MICHAEL M. EMRICK
STATE OF WASHINGTON
PROFESSIONAL ENGINEER
EXPIRES MAY 26, 2005

CALL 48 HOURS BEFORE YOU DIG
1-800-553-4344
"It's the Law"
NORTHWEST UTILITIES NOTIFICATION CENTER

DESIGNED	MME
DRAWN	BAK
CRP	381022
HOR.	1"=20'
VERT.	1"=5'
DATE	12/15/00
DWG:	PP01
SHEET	OF

N:\CIP\PROJECTS\381022-NW117-119\DESIGN\DWGS\119PP01.dwg, Layout1, 10/4/2004 2:49:38 PM, begleyk

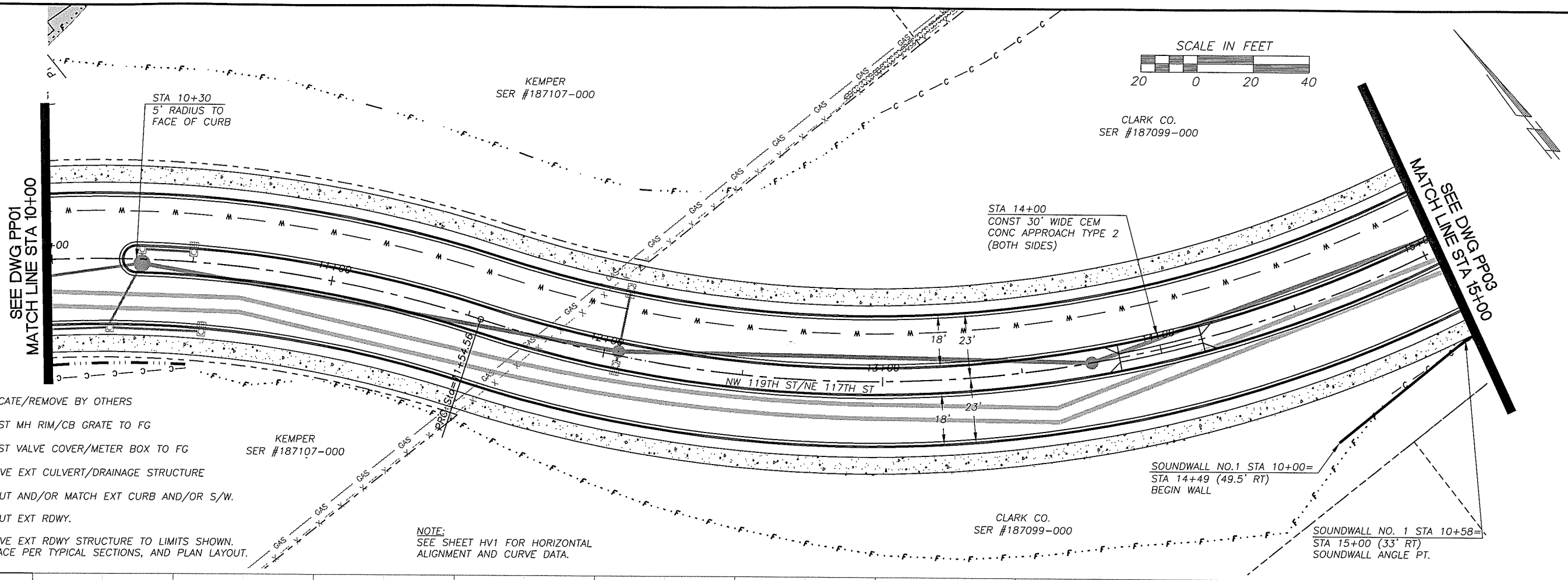

1. RELOCATE/REMOVE BY OTHERS
2. ADJUST MH RIM/CB GRATE TO FG
3. ADJUST VALVE COVER/METER BOX TO FG
4. REMOVE EXT CULVERT/DRAINAGE STRUCTURE
5. SAWCUT AND/OR MATCH EXT CURB AND/OR S/W.
6. SAWCUT EXT RDWY.

REMOVE EXT RDWY STRUCTURE TO LIMITS SHOWN. REPLACE PER TYPICAL SECTIONS, AND PLAN LAYOUT.

NOTE:
SEE SHEET HV1 FOR HORIZONTAL ALIGNMENT AND CURVE DATA.

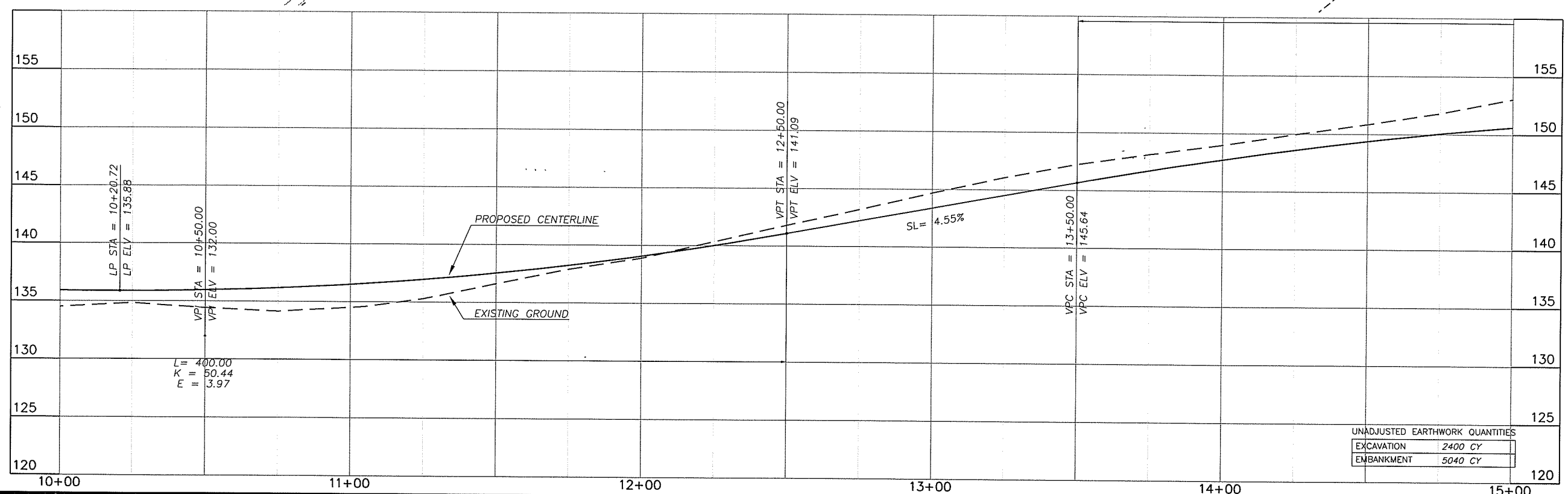

UNADJUSTED EARTHWORK QUANTITIES

EXCAVATION	2400 CY
EMBANKMENT	5040 CY

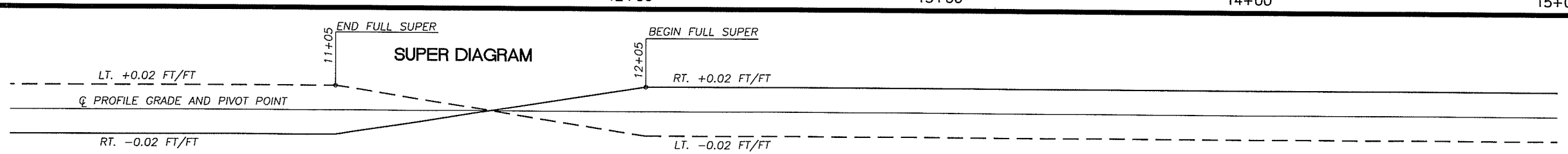

DESIGNED	MME
DRAWN	BAK
CRP	381022
HOR.	1"=20'
VERT.	1"=5'
DATE	12/15/00
DWG:	PP02
SHEET	OF

CALL 48 HOURS BEFORE YOU DIG
1-800-553-4344
"It's the Law"
NORTHWEST UTILITIES NOTIFICATION CENTER

MARCEL M. ERICK
STATE OF WASHINGTON
21900
REGISTERED PROFESSIONAL ENGINEER
EXPIRES MAY 26, 2005

DESIGN & ENGINEERING DIVISION
DESIGN SECTION

NW 119TH / 117TH STREET
STA 10+00 TO STA 15+00

proud past, promising future
CLARK COUNTY
WASHINGTON

N:\CIP\PROJECTS\381022-NW117-119\DESIGN\DWGS\119PP02.dwg, Layout1, 10/4/2004 2:50:30 PM, begleyk

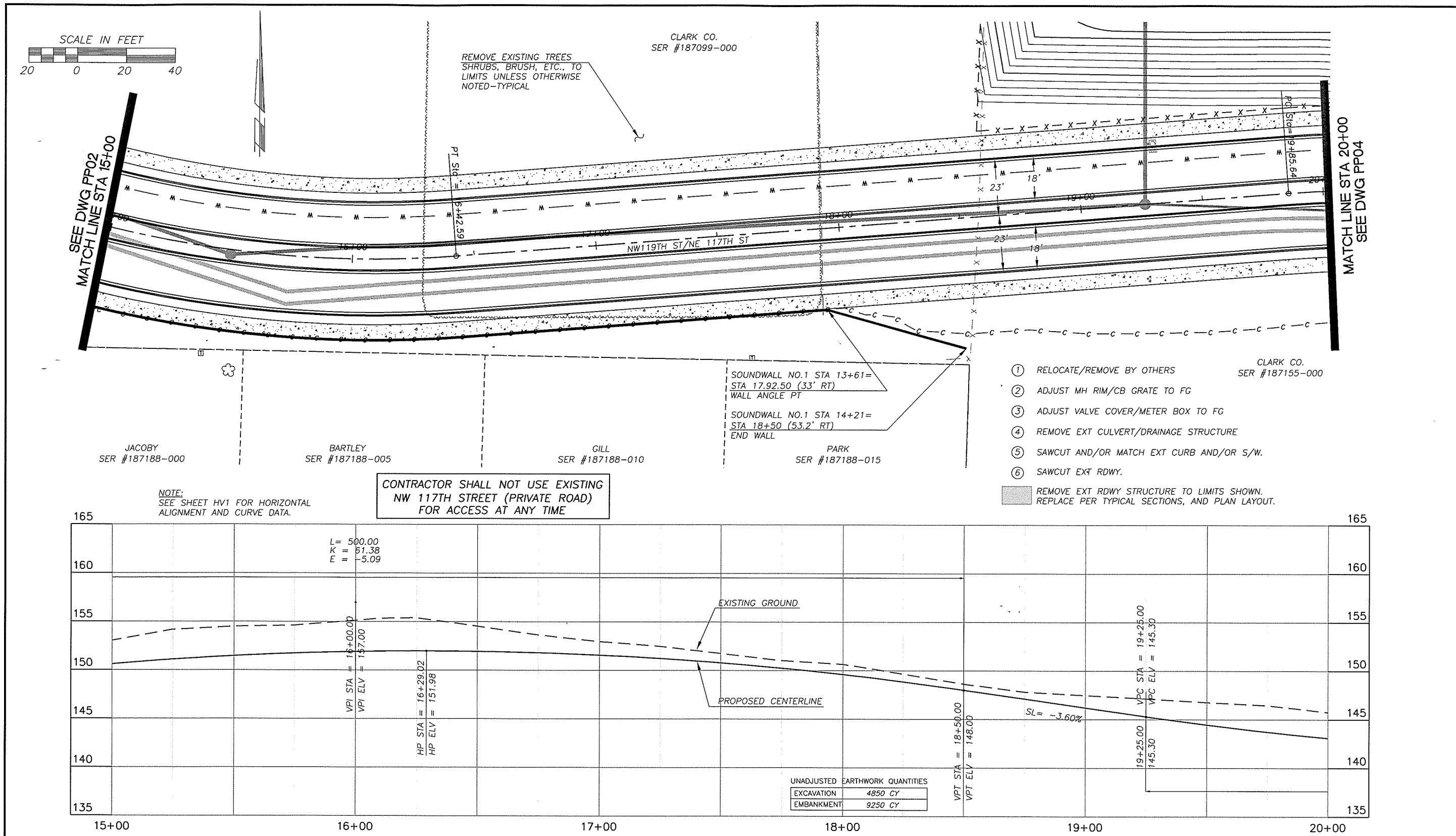

DESIGNED MME
DRAWN BAK
CRP 381022
HOR. 1"=20'
VERT. 1"=5'
DATE 7/14/01
DWG: PP03
SHEET OF

CALL 48 HOURS BEFORE YOU DIG 1–800–553–4344 "It's the Law" NORTHWEST UTILITIES NOTIFICATION CENTER

MICHAEL W. EDRICK STATE OF WASHINGTON 28030 REGISTERED PROFESSIONAL ENGINEER
EXPIRES JULY 26, 2005

DESIGN & ENGINEERING DIVISION
DESIGN SECTION

NW 119TH / 117TH STREET
STA 15+00 TO STA 20+00

proud past, promising future
CLARK COUNTY WASHINGTON

N:\CIP\PROJECTS\381022-NW117-119\DESIGN\DWGS\119PP03.dwg, Layout1, 10/4/2004 2:52:28 PM, begleyk

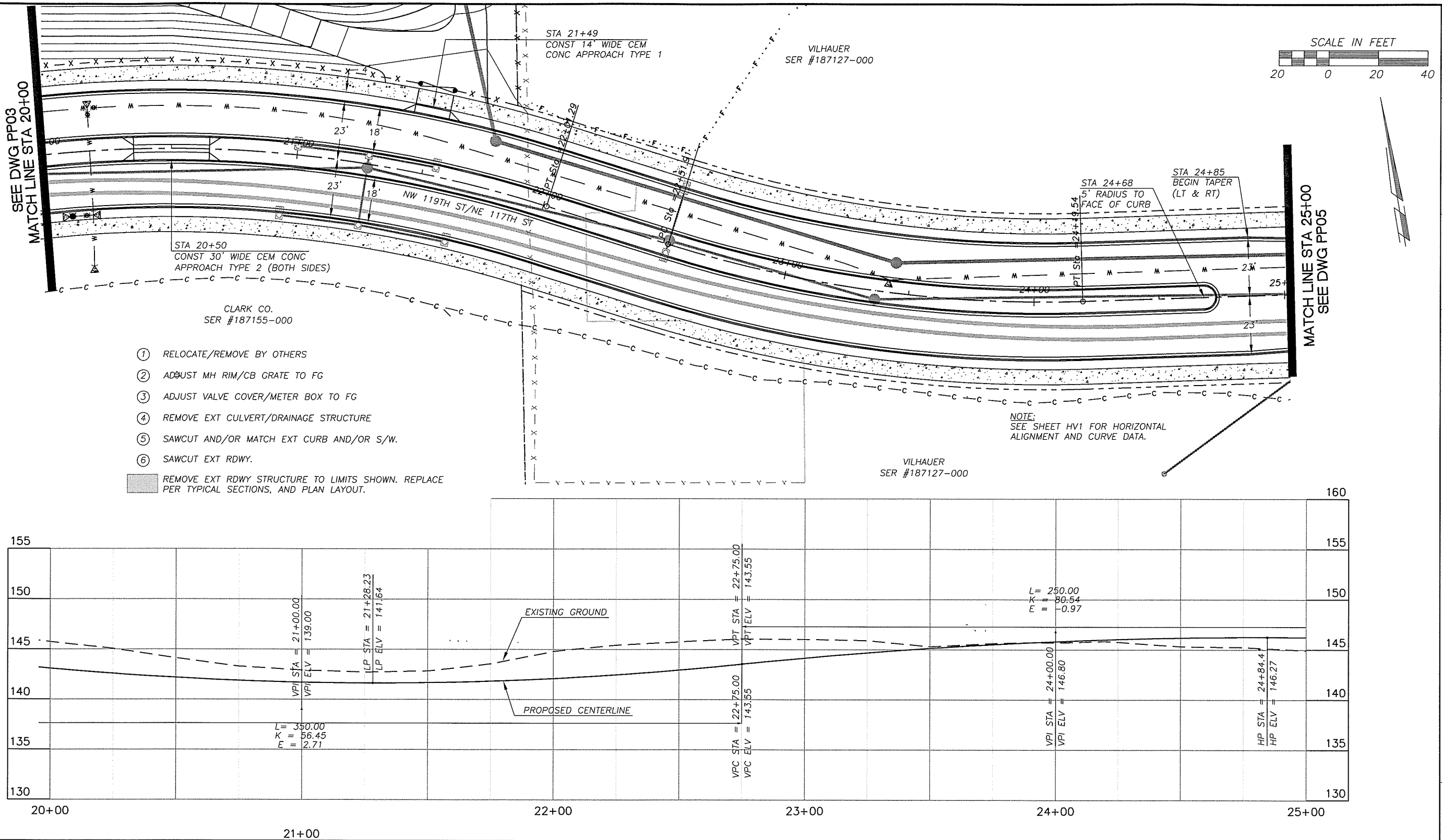

SUPER DIAGRAM

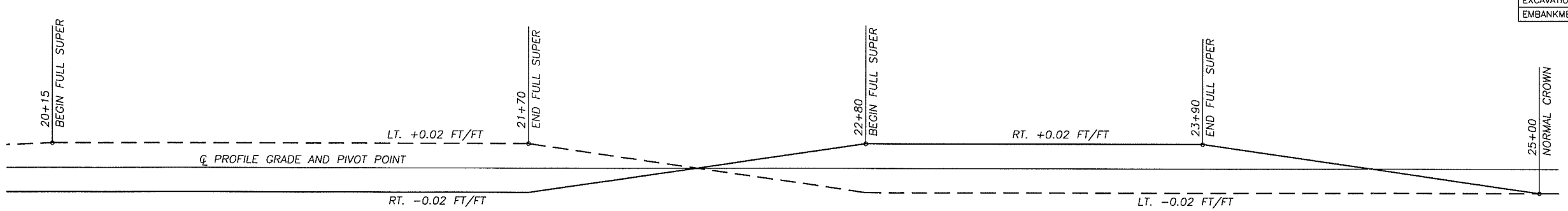

UNADJUSTED EARTHWORK QUANTITIES

EXCAVATION	3350 CY
EMBANKMENT	2920 CY

DESIGNED	MME
DRAWN	BAK
CRP	381022
HOR.	1"=20'
VERT.	1"=5'
DATE	10/20/01
DWG:	PP04
SHEET	OF

CALL 48 HOURS BEFORE YOU DIG
1-800-553-4344
"It's the Law"
NORTHWEST UTILITIES NOTIFICATION CENTER

MICHAEL W. EDRICK
STATE OF WASHINGTON
27830
REGISTERED PROFESSIONAL ENGINEER
EXPIRES: MAY 28, 2005

DESIGN & ENGINEERING DIVISION
DESIGN SECTION

NW 119TH / 117TH STREET
STA 20+00 TO STA 25+00

proud past, promising future
CLARK COUNTY
WASHINGTON

N:\CIP\PROJECTS\381022-NW117-119\DESIGN\DWGS\119PP04.dwg, Layout1, 10/4/2004 3:37:19 PM, begleyk

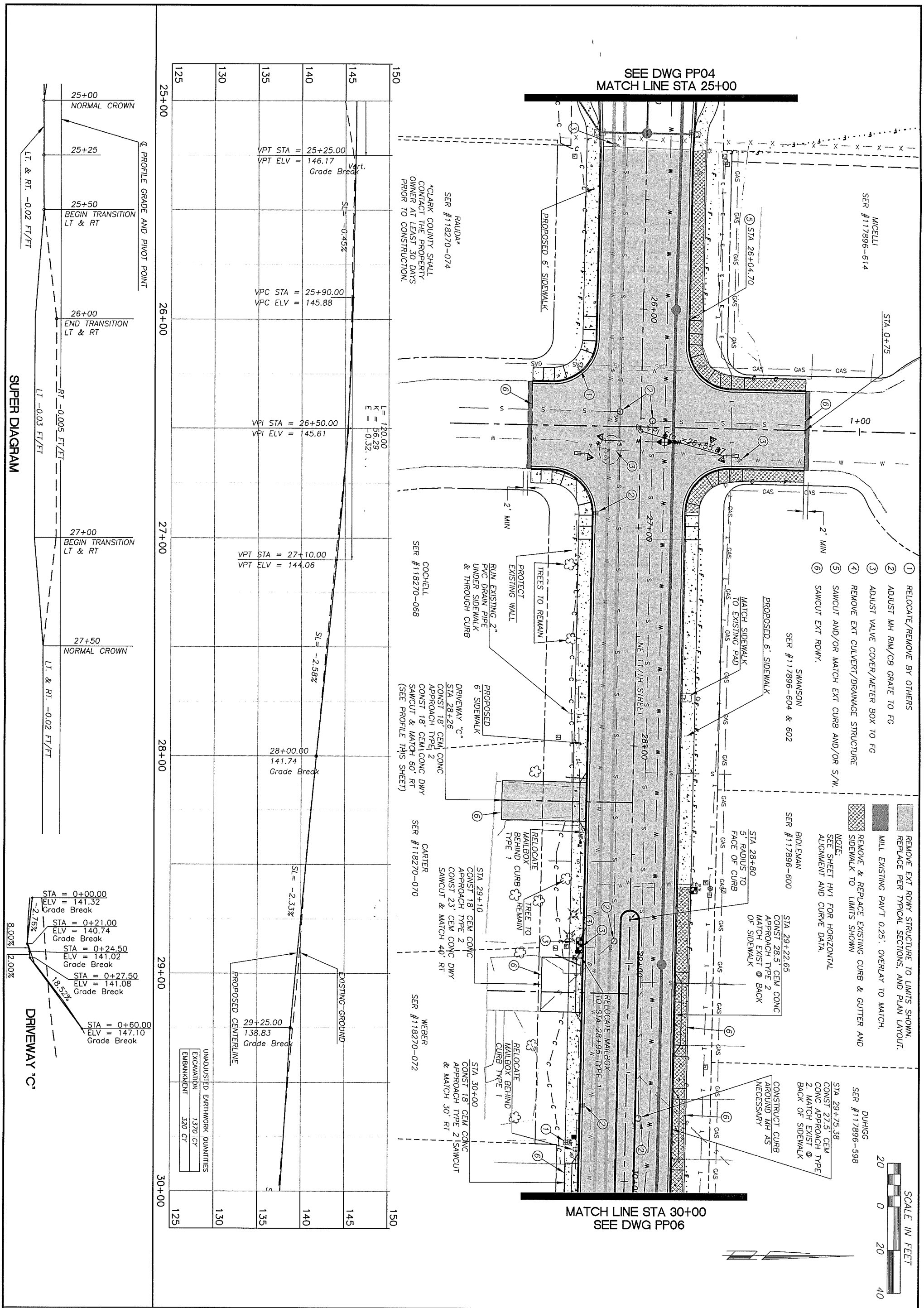

proud past, promising future
CLARK COUNTY
WASHINGTON

DESIGN & ENGINEERING DIVISION
DESIGN SECTION

NW 119TH / 117TH STREET
STA 25+00 TO STA 30+00

MICHAEL M. EMRICK
STATE OF WASHINGTON
29030
REGISTERED PROFESSIONAL ENGINEER
EXPIRES: MAY 26, 2005

CALL 48 HOURS BEFORE YOU DIG
1-800-553-4344
"It's the Law"
NORTHWEST UTILITIES NOTIFICATION CENTER

DESIGNED	MME
DRAWN	BAK
CRP	381022
HOR.	1"=20'
VERT.	1"=5'
DATE	10/20/01
DWG:	PP05
SHEET	OF

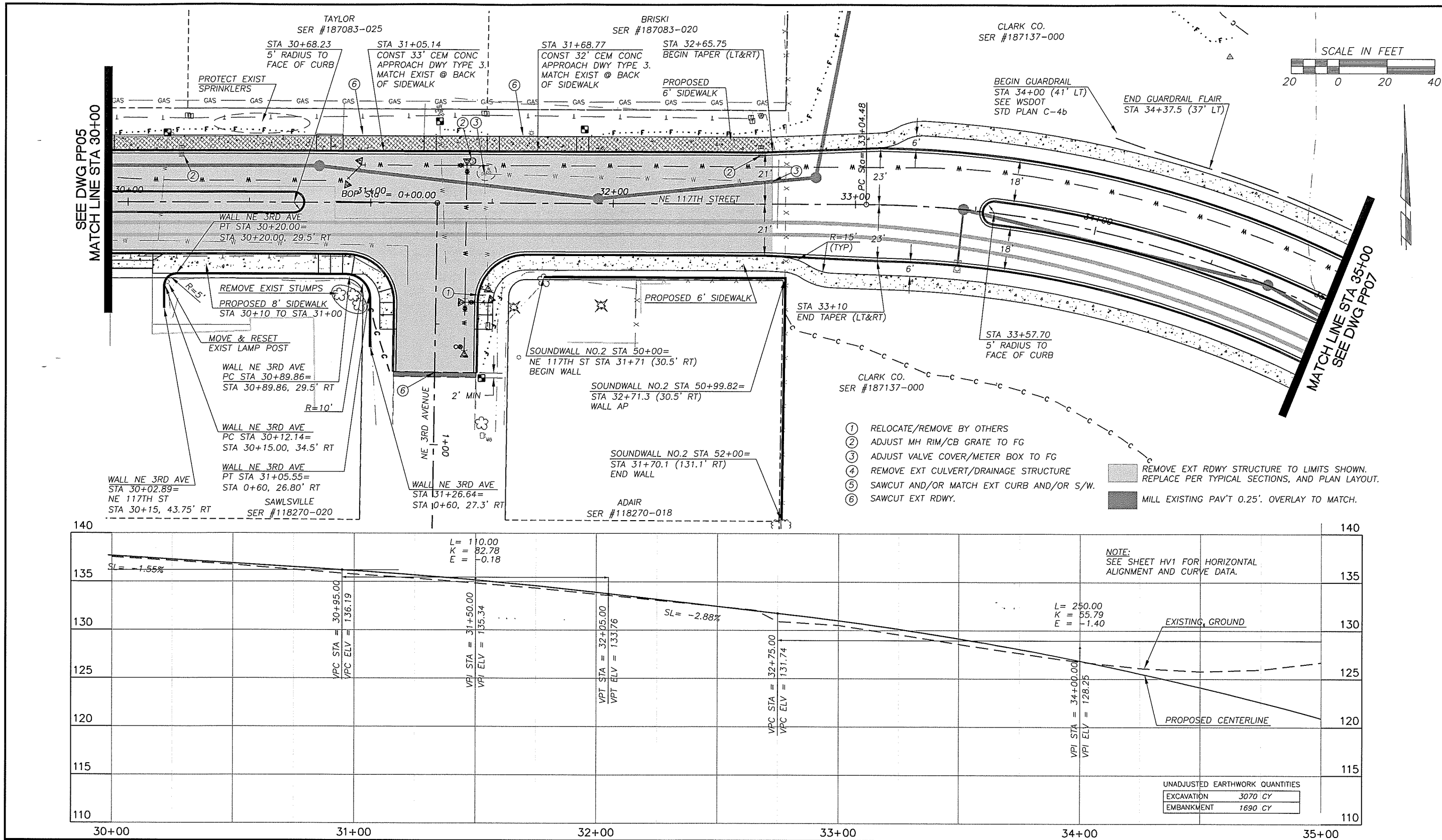

UNADJUSTED EARTHWORK QUANTITIES

EXCAVATION	3070 CY
EMBANKMENT	1690 CY

SUPER DIAGRAM

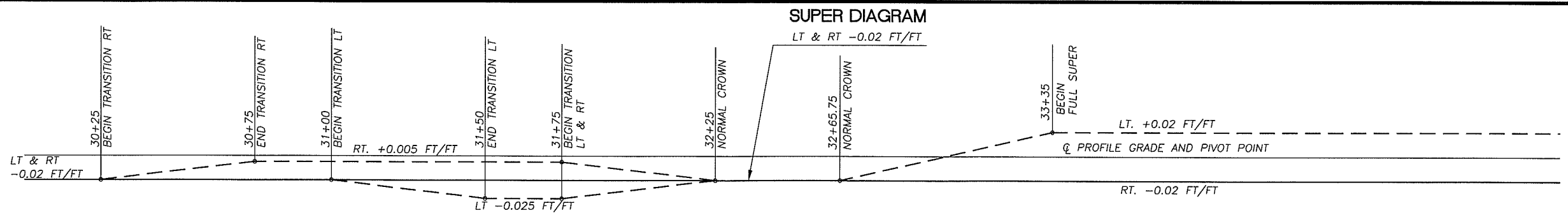

DESIGNED	MME
DRAWN	BAK
CRP	381022
HOR.	1"=20'
VERT.	1"=5'
DATE	10/20/01
DWG.	PP06
SHEET	OF

CALL 48 HOURS BEFORE YOU DIG 1-800-553-4344 "It's the Law" NORTHWEST UTILITIES NOTIFICATION CENTER

MICHAEL W. KUBICK STATE OF WASHINGTON 29030 REGISTERED PROFESSIONAL ENGINEER
EXPIRES: MAY 26, 2005

DESIGN & ENGINEERING DIVISION
DESIGN SECTION

NW 119TH / 117TH STREET
STA 30+00 TO STA 35+00

proud past, promising future
CLARK COUNTY WASHINGTON

N:\CIP\PROJECTS\381022-NW117-119\DESIGN\DWGS\119PP06.dwg, Layout1, 10/4/2004 4:27:44 PM, begleyk

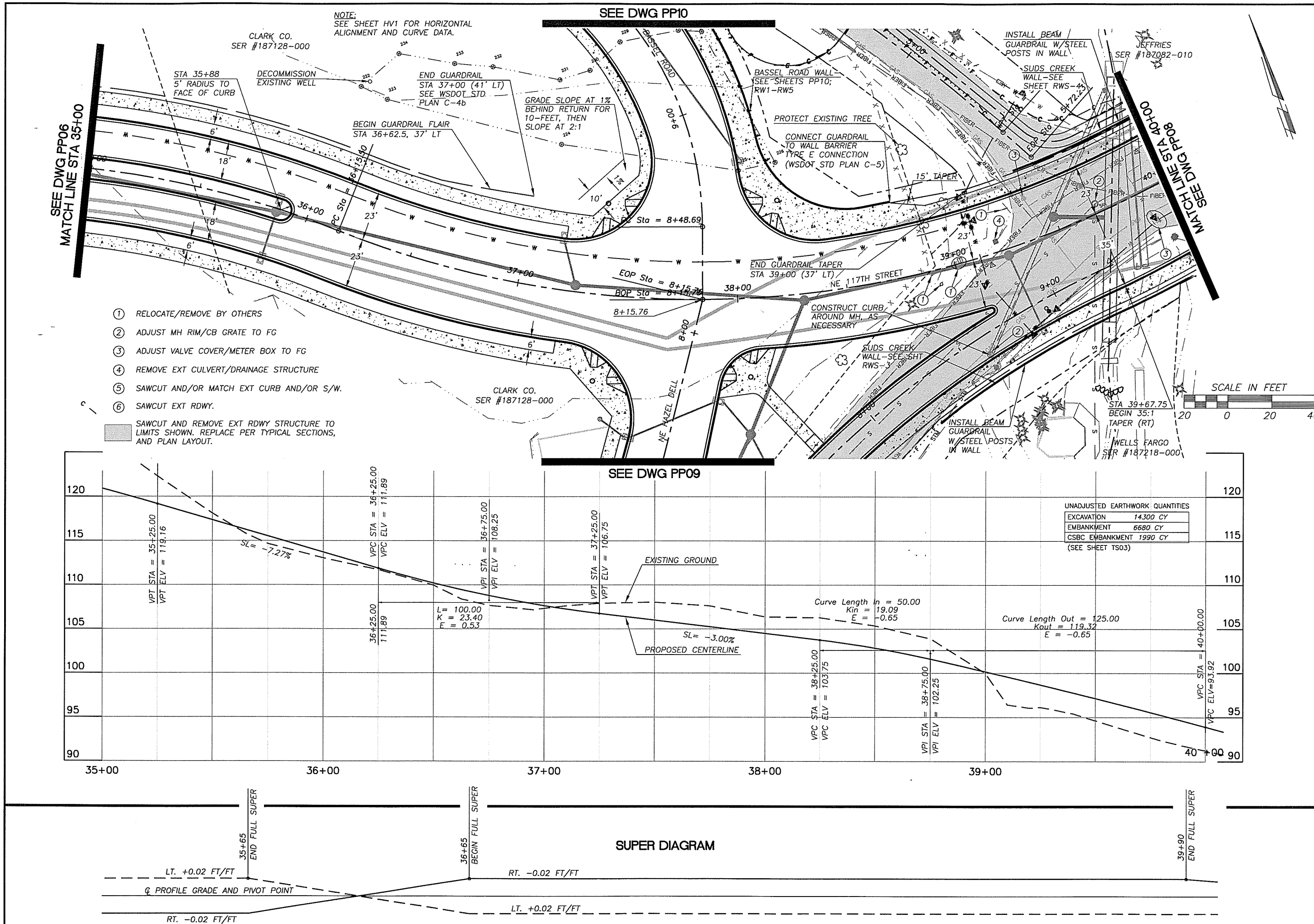

1. RELOCATE/REMOVE BY OTHERS
2. ADJUST MH RIM/CB GRATE TO FG
3. ADJUST VALVE COVER/METER BOX TO FG
4. REMOVE EXT CULVERT/DRAINAGE STRUCTURE
5. SAWCUT AND/OR MATCH EXT CURB AND/OR S/W.
6. SAWCUT EXT RDWY.

SAWCUT AND REMOVE EXT RDWY STRUCTURE TO LIMITS SHOWN. REPLACE PER TYPICAL SECTIONS, AND PLAN LAYOUT.

DESIGNED	MME
DRAWN	BAK
CRP	381022
HOR.	1"=20'
VERT.	1"=5'
DATE	10/20/01
DWG:	PP07
SHEET	OF

CALL 48 HOURS BEFORE YOU DIG
1-800-553-4344
"It's the Law"
NORTHWEST UTILITIES NOTIFICATION CENTER

MICHAEL M. ENRICK
STATE OF WASHINGTON
29030
REGISTERED PROFESSIONAL ENGINEER
EXPIRES: MAY 26, 2005

DESIGN & ENGINEERING DIVISION
DESIGN SECTION

NW 119TH / 117TH STREET
STA 35+00 TO STA 40+00

proud past, promising future
CLARK COUNTY
WASHINGTON

N:\CIP\PROJECTS\381022-NW117-119\DESIGN\DWGS\119PP07.dwg, Layout1, 10/4/2004 4:29:01 PM, begleyk

IF ROAD IS CONSTRUCTED TO FULL WIDTH EAST OF STA 40+75, REFER TO CRP 320322

NOTE:
CRP 381022
STA 40+75.00=
CRP 320322
STA 10+00.00

SCALE IN FEET
20 0 20 40

SEE DWG PP07
MATCH LINE STA 40+00

JEFFRIES
SER #187082-010

STA 41+18
CONST 18' ASPH CONC DWY.
SAWCUT & MATCH 42' LT

RELOCATE MAILBOX
25' RT. TYPE 1

STA 40+89.5, 31.5' LT
INSTALL BEAM GUARDRAIL
NON-FLARED TERMINAL (ROAD
SYSTEMS INC SKT-350 OR EQUAL)
SEE WSDOT STD PLAN C-4e

INSTALL BEAM GUARDRAIL
W/STEEL POSTS IN WALL

STA 42+79.60
CONST 27' ASPH CONC DWY.
SAWCUT & MATCH 31' LT

STA 43+40
END TAPER LT

FRANCIS
SER #187095-000

FRANCIS
SER #187142-000

CLAUS
SER #187110-000

PC STA = 40+21.26
PT STA = 41+10.00
PT STA = 42+36.50
23'
31.9'
1%

RELOCATE 15 LF
OF FENCE TO ROW

RELOCATE MAILBOX
TO STA 42+70,
TYPE 1

RELOCATE 37 LF
FENCE TO ROW

CLARK CO.
SER #187175-000

STA 44+25
END PAV'T OVERLAY. END TAPER RT
FEATHER ASPH TO MATCH (EAST)

1. RELOCATE/REMOVE BY OTHERS
2. ADJUST MH RIM/CB GRATE TO FG
3. ADJUST VALVE COVER/METER BOX TO FG
4. REMOVE EXT CULVERT/DRAINAGE STRUCTURE
5. SAWCUT AND/OR MATCH EXT CURB AND/OR S/W.
6. SAWCUT EXT RDWY.

SAWCUT AND REMOVE EXT RDWY STRUCTURE TO LIMITS SHOWN. REPLACE PER TYPICAL SECTIONS, AND PLAN LAYOUT.

RELOCATE MAILBOXES
BEHIND CURB TYPE 2

STA 40+10-CONST 20' CEM
CONC APPROACH TYPE 2

HAMMER
SER #187109-000

STA 41+11
CONST 21' ASPH CONC DWY
SAWCUT & MATCH 65' RT

STA 40+75
END CURB & GUTTER
(LT&RT) BEGIN TAPER

WILSON
SER #187121-000

STA 42+36.4
CONST 14' ASPH
CONC DWY SAWCUT
& MATCH 33.4' RT

CLARK CO.
SER #187165-000

CLARK CO.
SER #187175-000

CLARK CO.
SER #187182-000

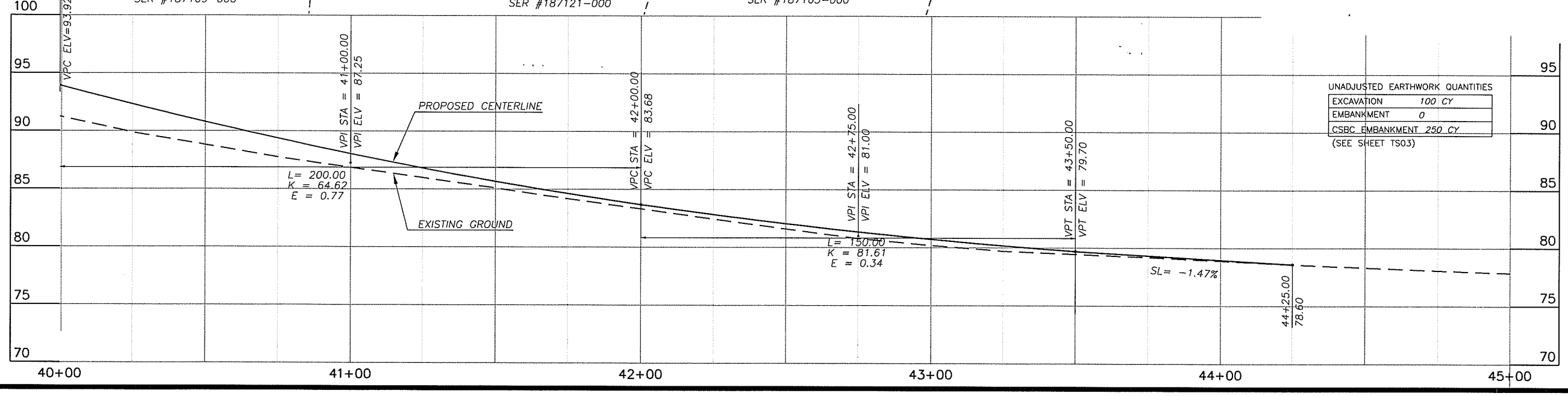

UNADJUSTED EARTHWORK QUANTITIES

EXCAVATION	100 CY
EMBANKMENT	0
CSBC EMBANKMENT	250 CY

(SEE SHEET TS03)

SUPER DIAGRAM

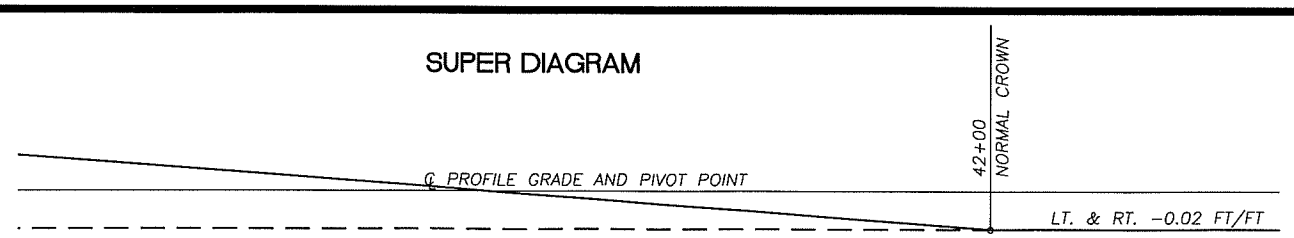

DESIGNED	MME
DRAWN	BAK
CRP	381022
HOR.	1"=20'
VERT.	1"=5'
DATE	10/20/01
DWG:	PP08
SHEET	OF

CALL 48 HOURS BEFORE YOU DIG
1-800-553-4344
"It's the Law"
NORTHWEST UTILITIES NOTIFICATION CENTER

MICHAEL M. EMRICK
STATE OF WASHINGTON
PROFESSIONAL ENGINEER
EXPIRES: MAY 28, 2005

DESIGN & ENGINEERING DIVISION
DESIGN SECTION

NW 119TH / 117TH STREET
STA 40+00 TO E.O.P.

proud past, promising future
CLARK COUNTY
WASHINGTON

N:\CIP\PROJECTS\381022-NW117-119\DESIGN\DWGS\119PP08.dwg, Layout1, 10/4/2004 4:29:45 PM, begleyk

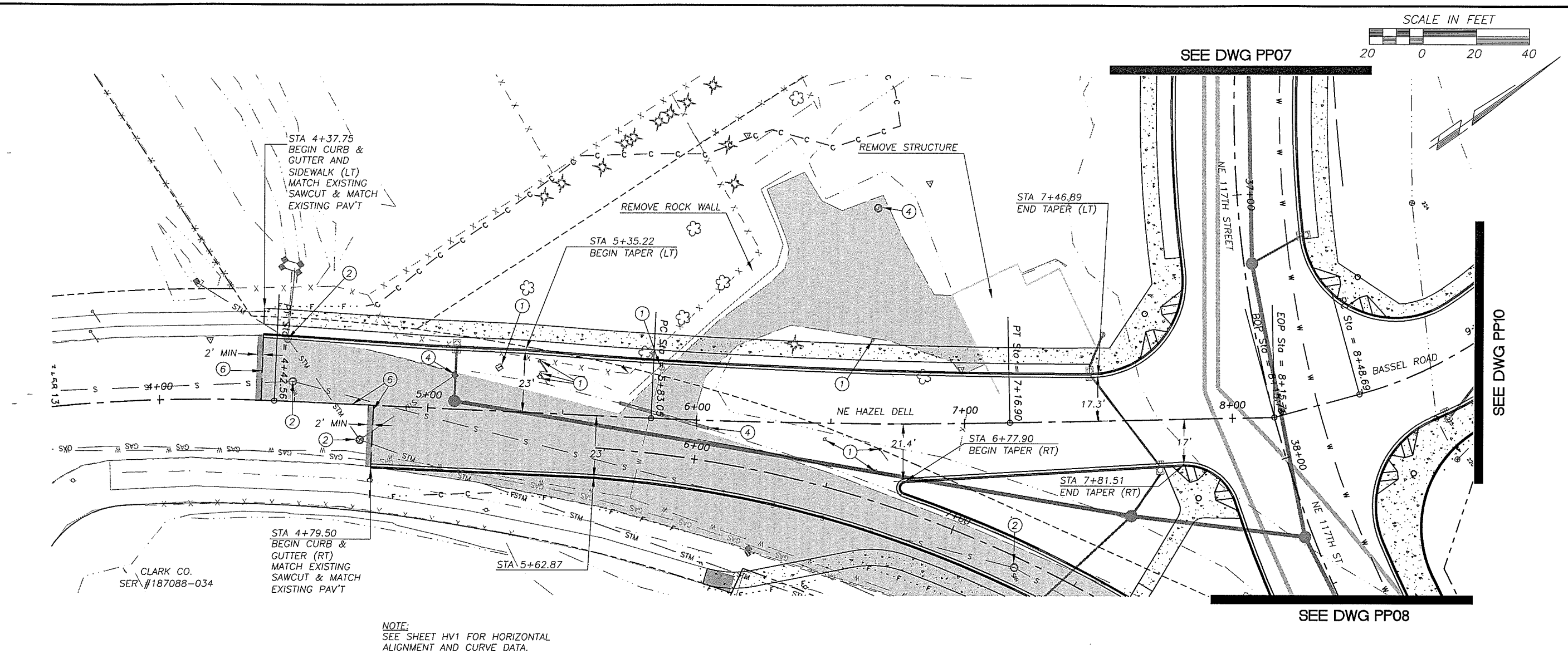

NOTE:
SEE SHEET HV1 FOR HORIZONTAL ALIGNMENT AND CURVE DATA.

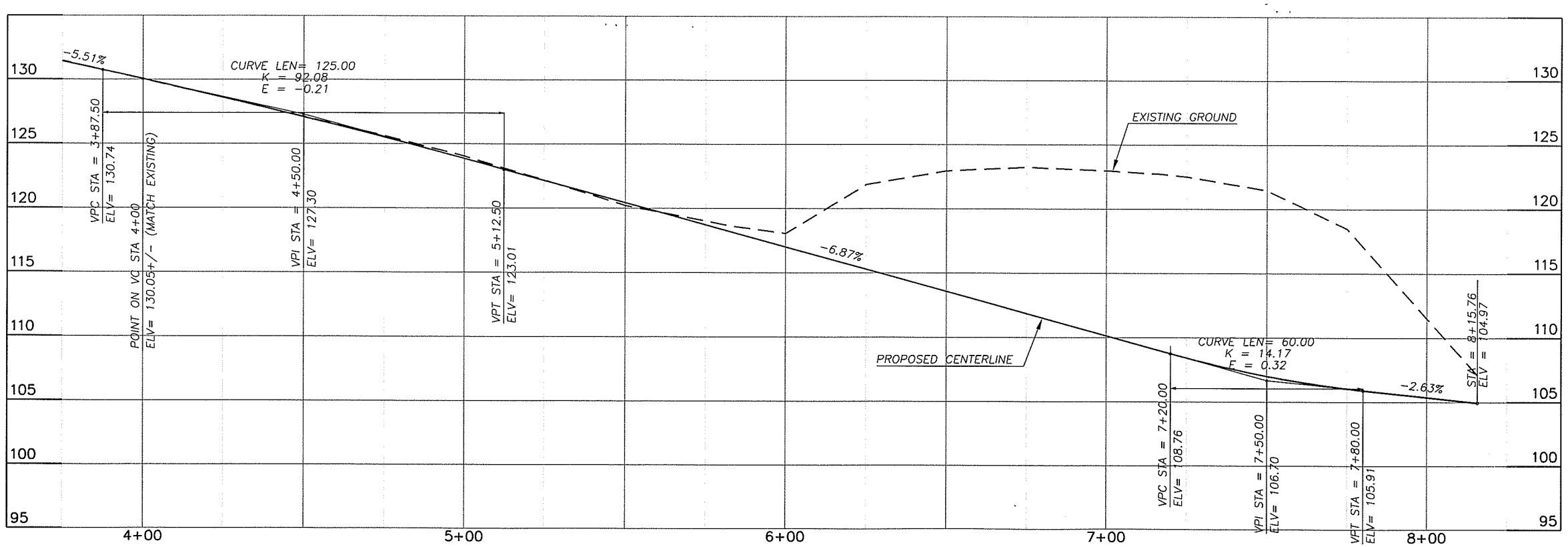

1. RELOCATE/REMOVE BY OTHERS
2. ADJUST MH RIM/CB GRATE TO FG
3. ADJUST VALVE COVER/METER BOX TO FG
4. REMOVE EXT CULVERT/DRAINAGE STRUCTURE
5. SAWCUT AND/OR MATCH EXT CURB AND/OR S/W.
6. SAWCUT EXT RDWY.

SAWCUT AND REMOVE EXT RDWY STRUCTURE TO LIMITS SHOWN. REPLACE PER TYPICAL SECTIONS, AND PLAN LAYOUT.

MILL EXISTING PAV'T 0.25' OVERLAY TO MATCH

UNADJUSTED EARTHWORK QUANTITIES

EXCAVATION	8650 CY
EMBANKMENT	10 CY

DESIGNED MME
DRAWN BAK
CRP 381022
HOR. 1"=20'
VERT. 1"=5'
DATE 10/20/01
DWG: PP09
SHEET OF

CALL 48 HOURS BEFORE YOU DIG
1-800-553-4344
"It's the Law"
NORTHWEST UTILITIES NOTIFICATION CENTER

MICHAEL M. EMRICK
STATE OF WASHINGTON
29030
REGISTERED PROFESSIONAL ENGINEER
EXPIRES MAY 26, 2005

DESIGN & ENGINEERING DIVISION
DESIGN SECTION

NW 119TH / 117TH STREET
HAZEL DELL AVE BOP TO STA 8+15.76

proud past, promising future
CLARK COUNTY WASHINGTON

N:\CIP\PROJECTS\381022-NW117-119\DESIGN\DWGS\119PP09.dwg, Layout1, 10/4/2004 4:36:26 PM, begleyk

NOTE:
SEE SHEET HV1 FOR HORIZONTAL ALIGNMENT AND CURVE DATA.

1. RELOCATE/REMOVE BY OTHERS
2. ADJUST MH RIM/CB GRATE TO FG
3. ADJUST VALVE COVER/METER BOX TO FG
4. REMOVE EXT CULVERT/DRAINAGE STRUCTURE
5. SAWCUT AND/OR MATCH EXT CURB AND/OR S/W.
6. SAWCUT RDWY.

SAWCUT AND REMOVE EXT RDWY STRUCTURE TO LIMITS SHOWN. REPLACE PER TYPICAL SECTIONS, AND PLAN LAYOUT.

MILL EXISTING PAV'T 0.25' OVERLAY TO MATCH

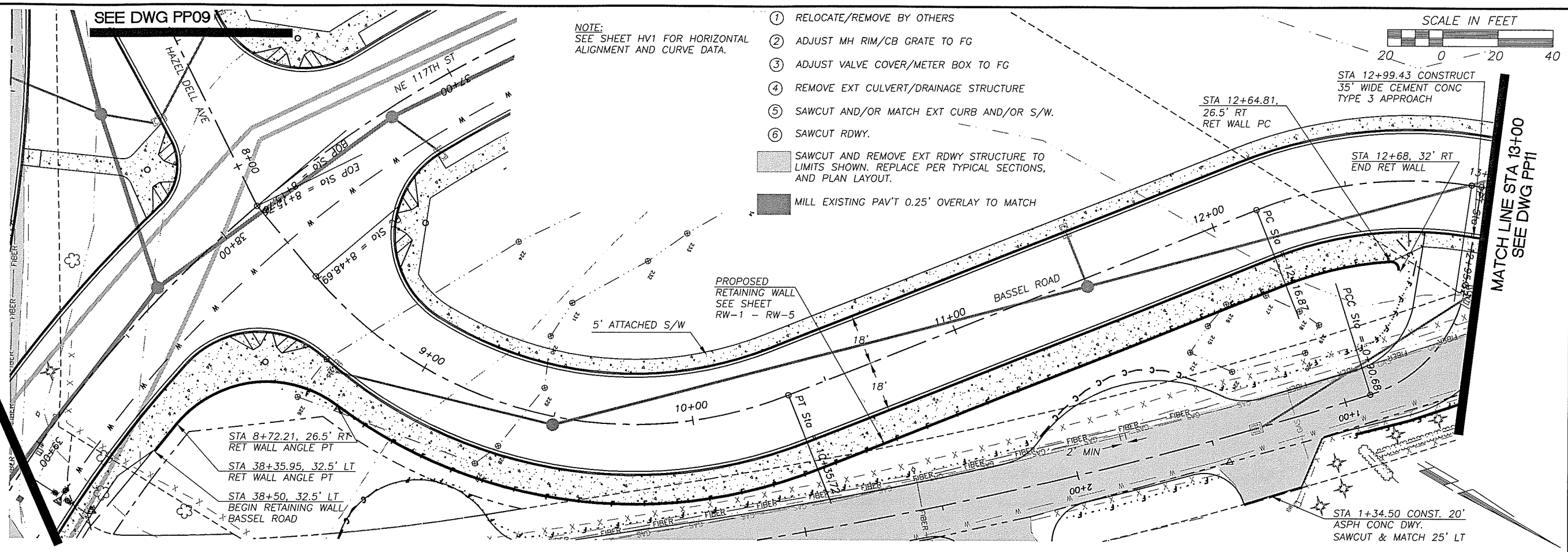

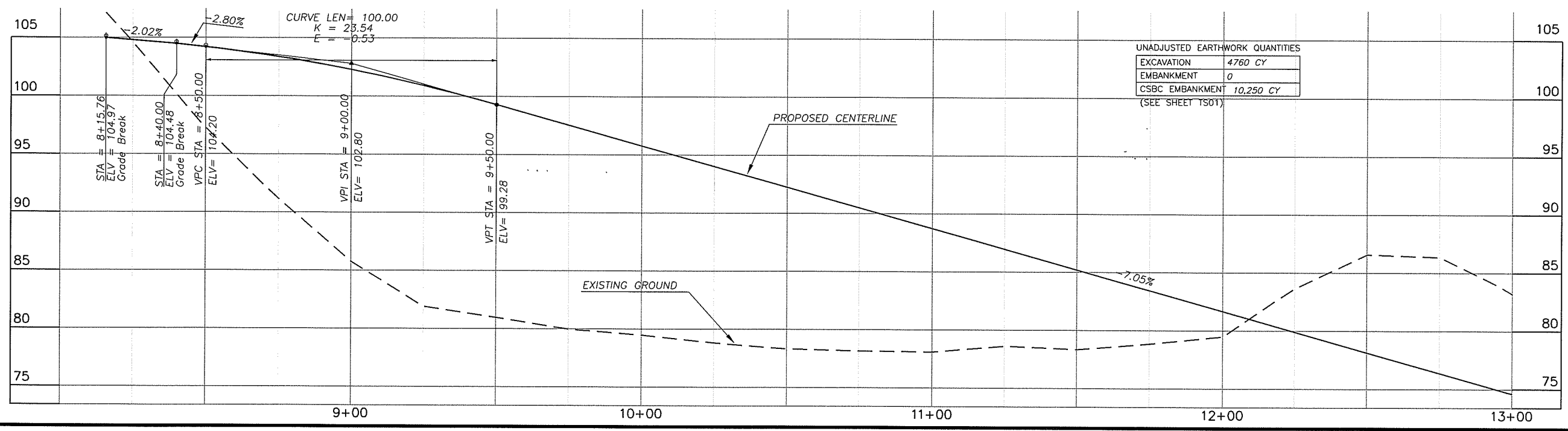

UNADJUSTED EARTHWORK QUANTITIES

EXCAVATION	4760 CY
EMBANKMENT	0
CSBC EMBANKMENT	10,250 CY

(SEE SHEET TS01)

SUPER DIAGRAM

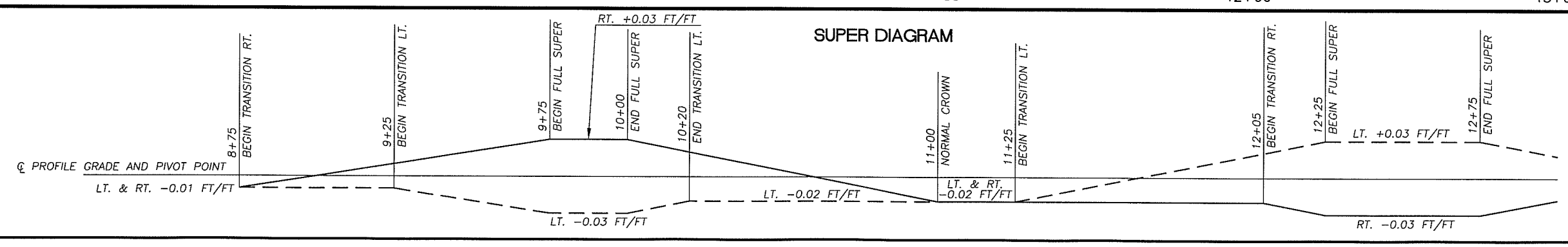

DESIGNED	MME
DRAWN	BAK
CRP	381022
HOR.	1"=20'
VERT.	1"=5'
DATE	10/20/01
DWG:	PP10
SHEET	OF

CALL 48 HOURS BEFORE YOU DIG 1-800-553-4344 "It's the Law" NORTHWEST UTILITIES NOTIFICATION CENTER

STATE OF WASHINGTON MICHAEL A. MARCIC 29030 REGISTERED PROFESSIONAL ENGINEER EXPIRES: MAY 26, 2005

DESIGN & ENGINEERING DIVISION
DESIGN SECTION

NW 119TH / 117TH STREET
BASSEL ROAD STA 8+15.76 TO STA 13+00

proud past, promising future
CLARK COUNTY WASHINGTON

N:\CIP\PROJECTS\381022-NW117-119\DESIGN\DWGS\119PP10.dwg, Layout1, 10/4/2004 4:37:55 PM, begleyk

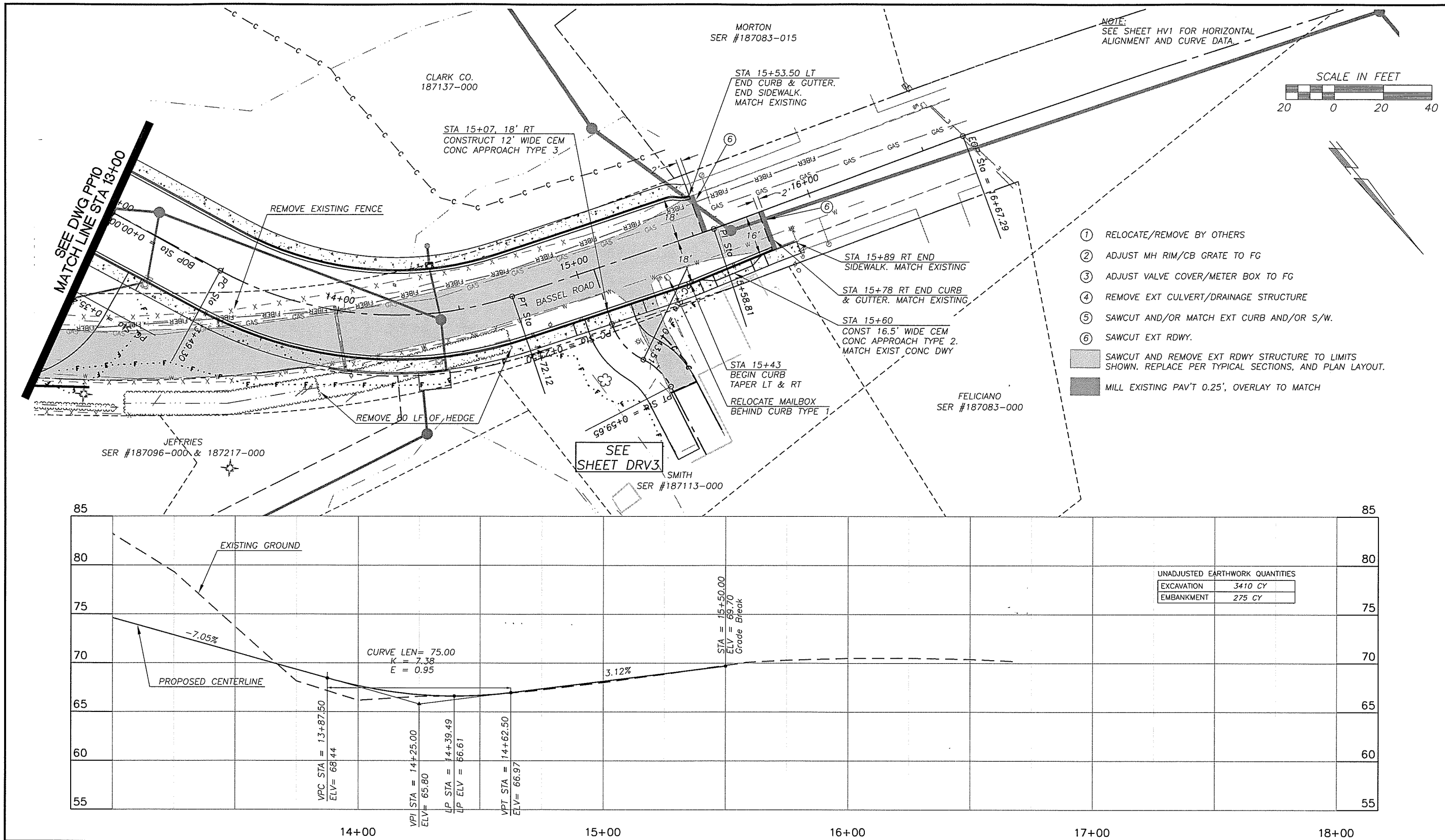

UNADJUSTED EARTHWORK QUANTITIES

EXCAVATION	3410 CY
EMBANKMENT	275 CY

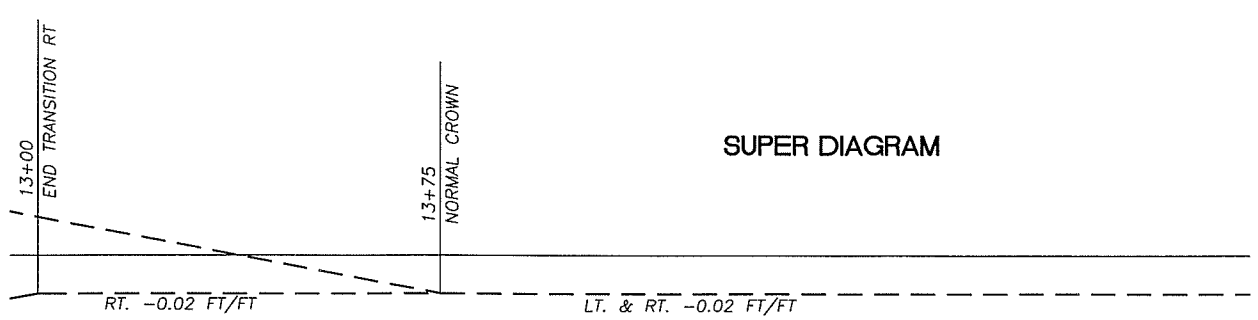

SUPER DIAGRAM

DESIGNED MME
DRAWN BAK
CRP 381022
HOR. 1"=20'
VERT. 1"=5'
DATE 10/20/01
DWG: PP11
SHEET OF

CALL 48 HOURS BEFORE YOU DIG
1-800-553-4344
"It's the Law"
NORTHWEST UTILITIES NOTIFICATION CENTER

MICHAEL M. EMERICK
STATE OF WASHINGTON
29030
REGISTERED PROFESSIONAL ENGINEER
EXPIRES MAY 26, 2005

DESIGN & ENGINEERING DIVISION
DESIGN SECTION

NW 119TH / 117TH STREET
BASSEL ROAD STA 13+00 TO E.O.P.

proud past, promising future
CLARK COUNTY
WASHINGTON

N:\CIP\PROJECTS\381022-NW117-119\DESIGN\DWGS\119PP11.dwg, Layout1, 10/4/2004 4:45:09 PM, begleyk

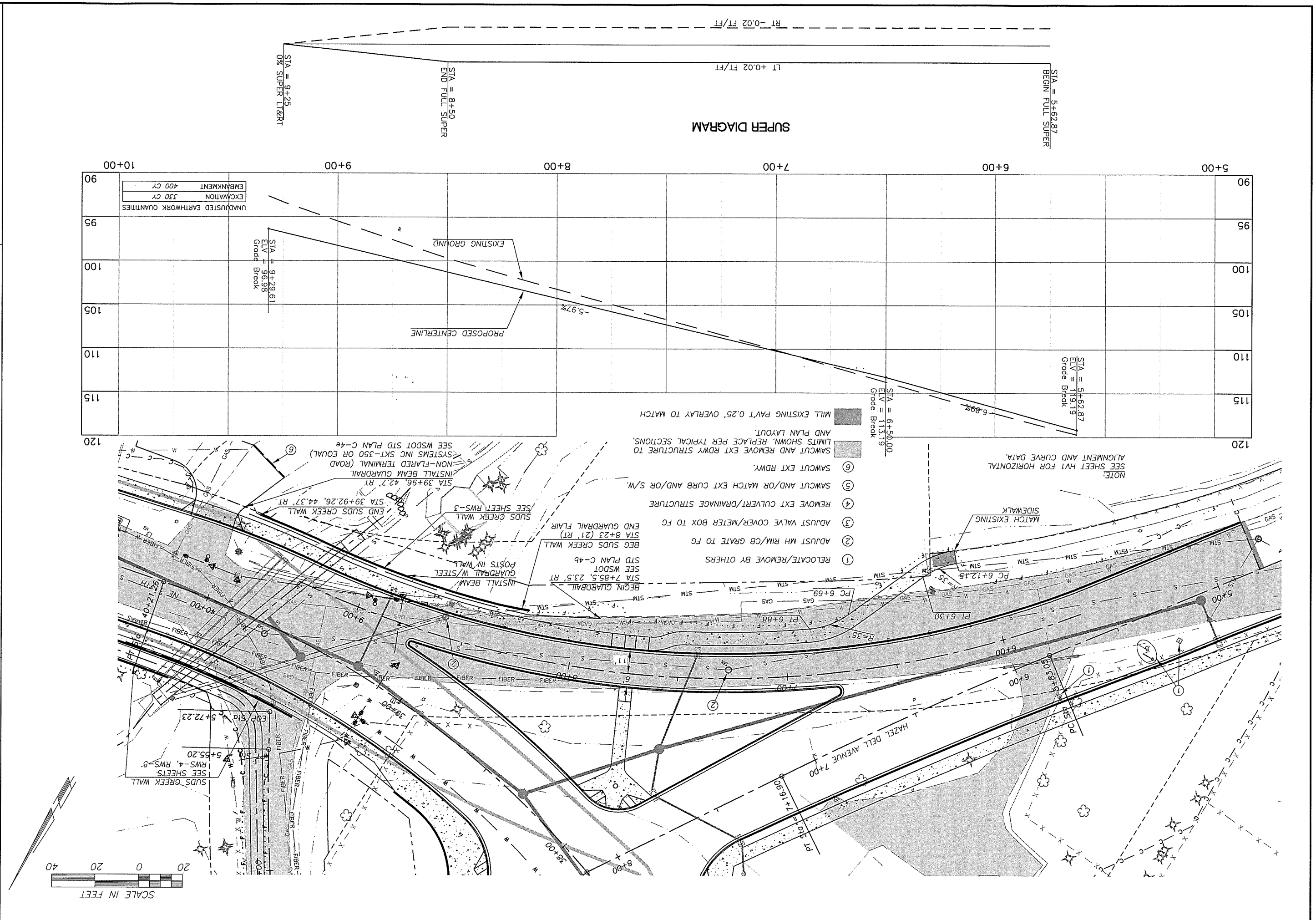

CLARK COUNTY
WASHINGTON

proud past, promising future

DESIGN & ENGINEERING DIVISION
DESIGN SECTION

NW 119TH / 117TH STREET
HAZEL DELL MERGE LANE

MICHAEL M. ENRICK
STATE OF WASHINGTON
PROFESSIONAL ENGINEER
EXPIRES: MAY 26, 2005

CALL 48 HOURS BEFORE YOU DIG
1-800-553-4344
"It's the Law"
NORTHWEST UTILITIES NOTIFICATION CENTER

DESIGNED	MME
DRAWN	BAK
CRP	381022
HOR.	1"=20'
VERT.	1"=5'
DATE	10/20/01
DWG:	PP12
SHEET	OF

N:\CIP\PROJECTS\381022-NW117-119\DESIGN\DWGS\119PP12.dwg, Layout1, 10/4/2004 4:47:11 PM, begleyk

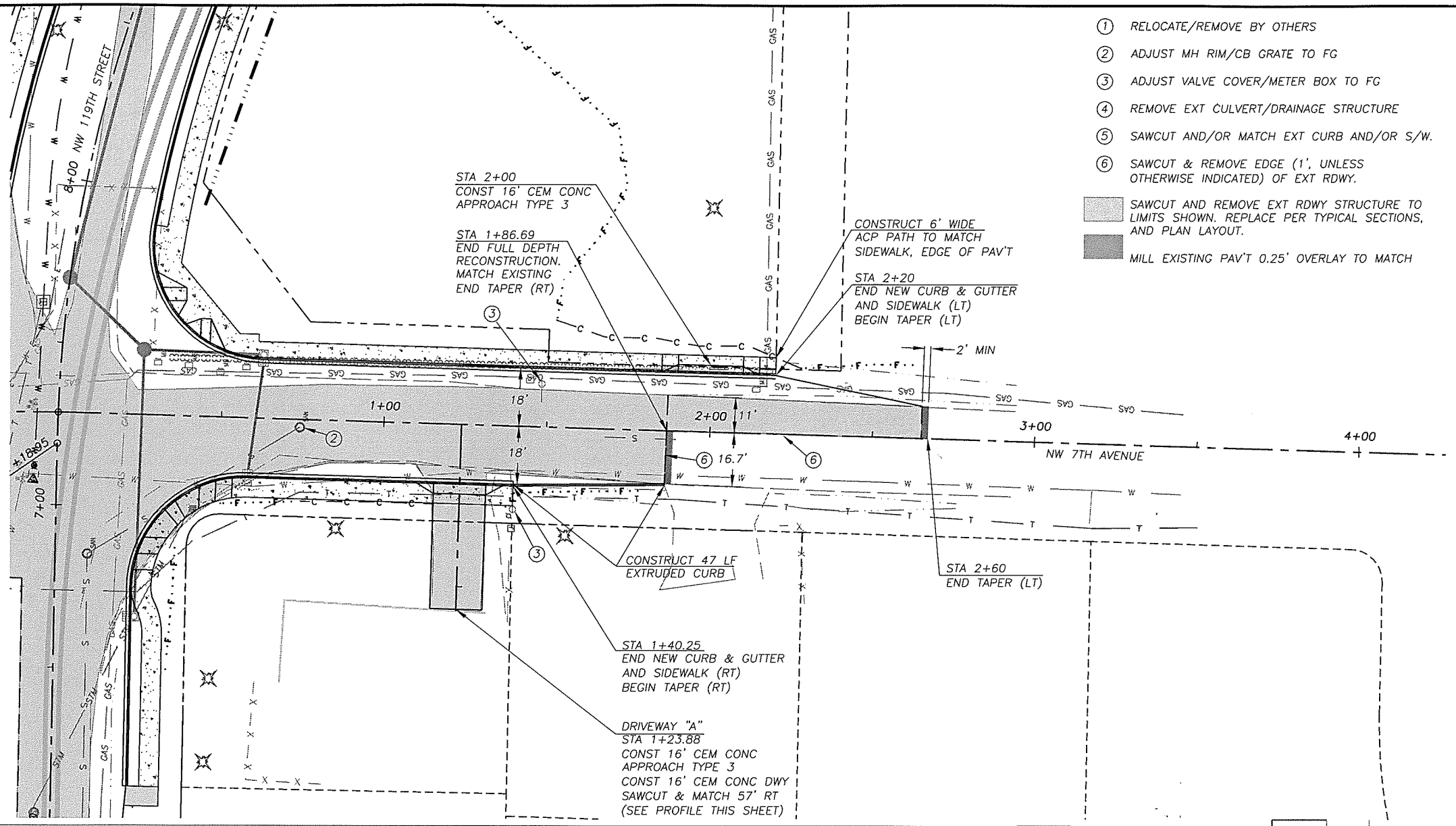

1. RELOCATE/REMOVE BY OTHERS
2. ADJUST MH RIM/CB GRATE TO FG
3. ADJUST VALVE COVER/METER BOX TO FG
4. REMOVE EXT CULVERT/DRAINAGE STRUCTURE
5. SAWCUT AND/OR MATCH EXT CURB AND/OR S/W.
6. SAWCUT & REMOVE EDGE (1', UNLESS OTHERWISE INDICATED) OF EXT RDWY.

SAWCUT AND REMOVE EXT RDWY STRUCTURE TO LIMITS SHOWN. REPLACE PER TYPICAL SECTIONS, AND PLAN LAYOUT.

MILL EXISTING PAV'T 0.25' OVERLAY TO MATCH

SCALE IN FEET

20 0 20 40

NOTE:
SEE SHEET HV1 FOR HORIZONTAL ALIGNMENT AND CURVE DATA.

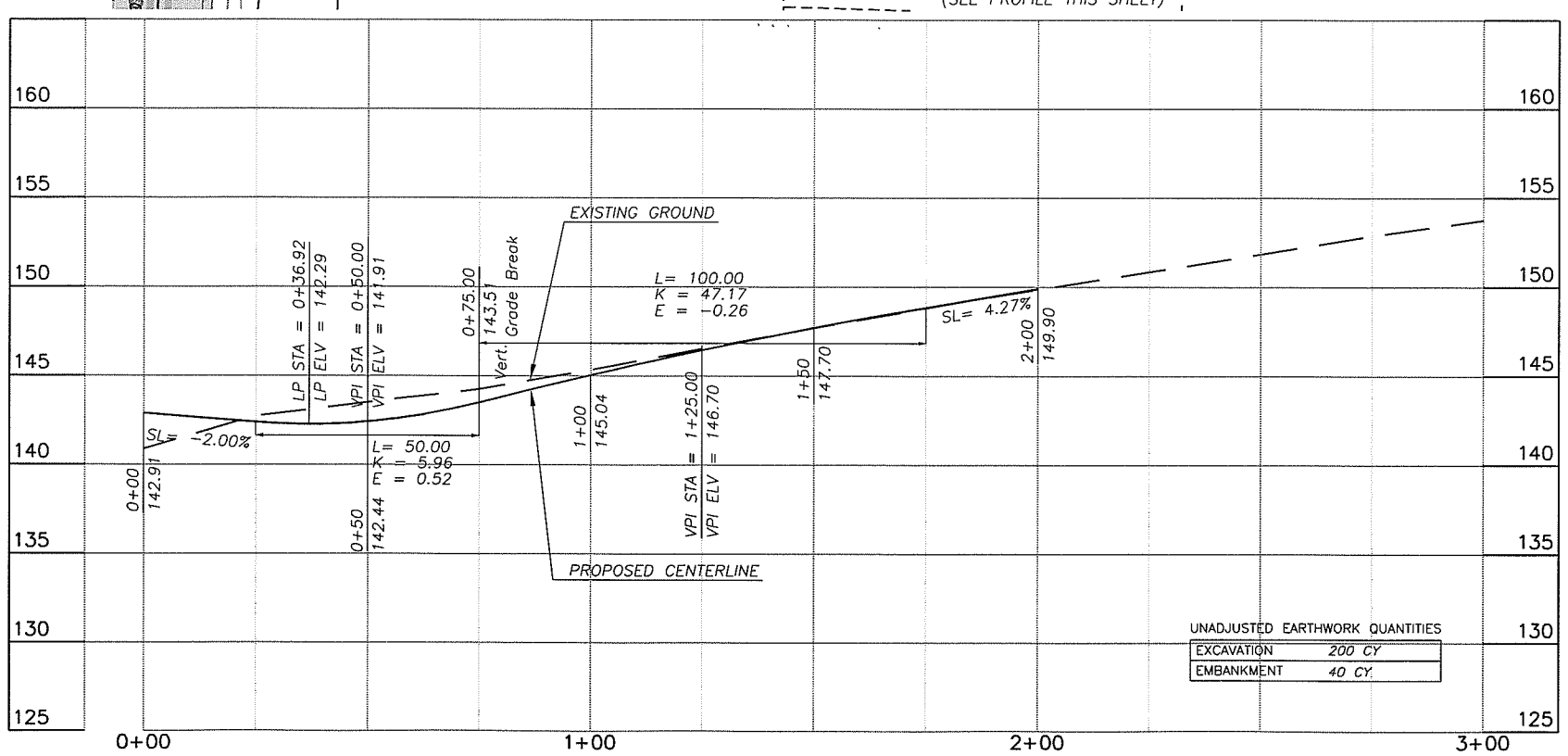

UNADJUSTED EARTHWORK QUANTITIES

EXCAVATION	200 CY
EMBANKMENT	40 CY

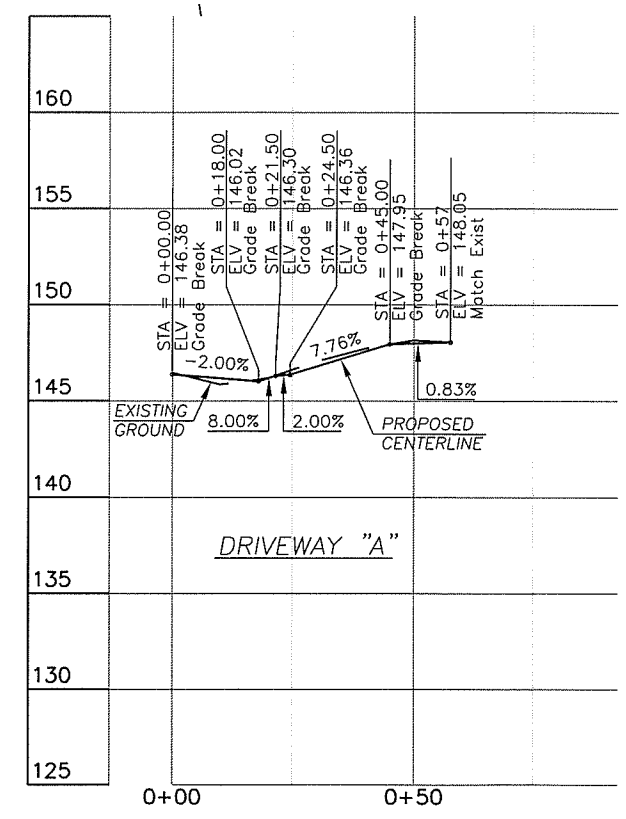

DESIGNED MME
DRAWN BAK
CRP 381022
HOR. 1"=20'
VERT. 1"=5'
DATE 10/20/01
DWG: PP13
SHEET OF

CALL 48 HOURS BEFORE YOU DIG
1-800-553-4344
"It's the Law"
NORTHWEST UTILITIES NOTIFICATION CENTER

MICHAEL M. EMRICK
STATE OF WASHINGTON
28030
REGISTERED PROFESSIONAL ENGINEER
EXPIRES MAY 28, 2005

DESIGN & ENGINEERING DIVISION
DESIGN SECTION

NW 119TH / 117TH STREET
NW 7TH AVENUE

proud past, promising future

CLARK COUNTY
WASHINGTON

N:\CIP\PROJECTS\381022-NW117-119\DESIGN\DWGS\119PP13.dwg, Layout1, 10/4/2004 4:48:14 PM, begleyk

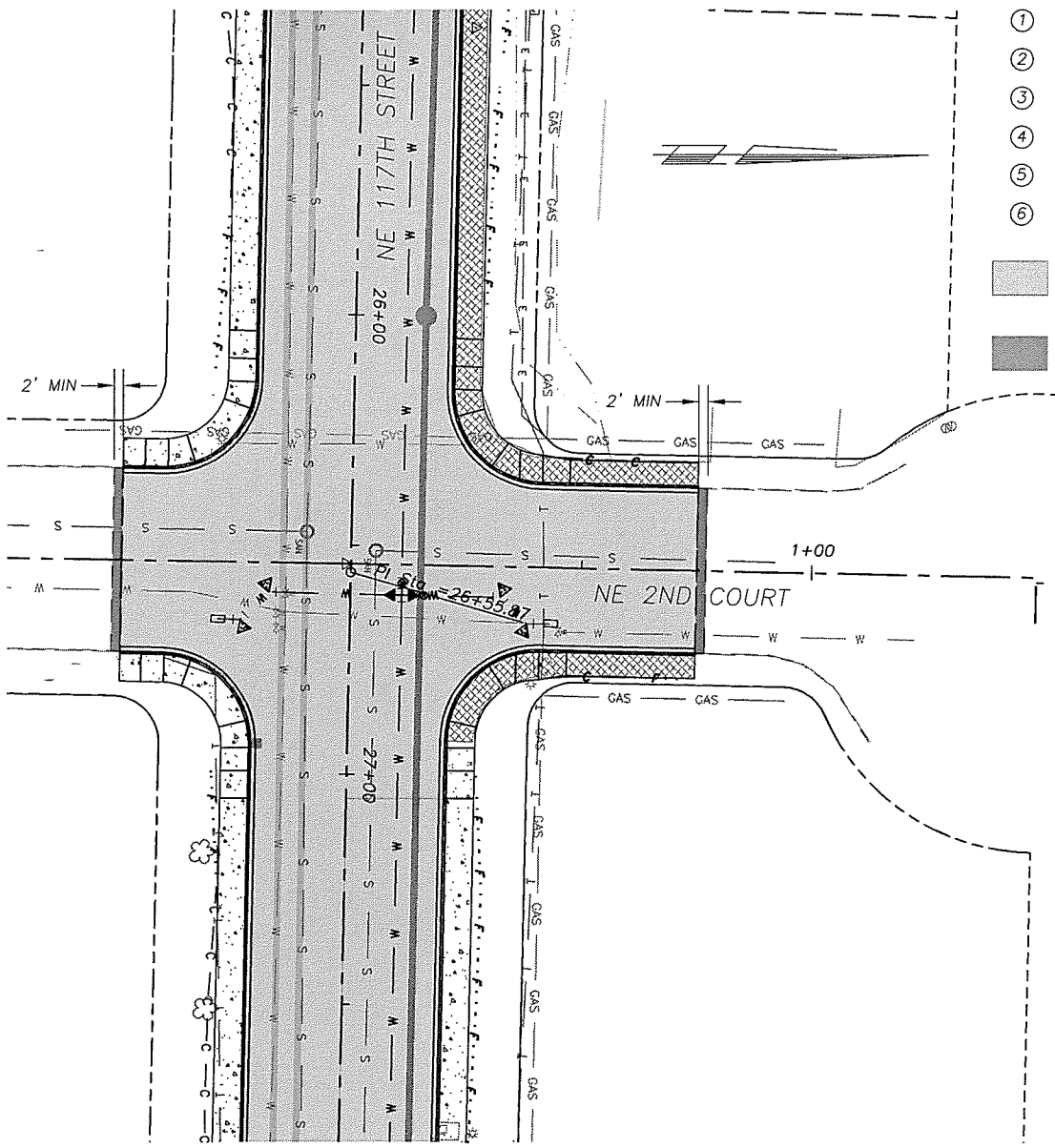

1. RELOCATE/REMOVE BY OTHERS
2. ADJUST MH RIM/CB GRATE TO FG
3. ADJUST VALVE COVER/METER BOX TO FG
4. REMOVE EXT CULVERT/DRAINAGE STRUCTURE
5. SAWCUT AND/OR MATCH EXT CURB AND/OR S/W.
6. SAWCUT & REMOVE EDGE (1', UNLESS OTHERWISE INDICATED) OF EXT RDWY.

SAWCUT AND REMOVE EXT RDWY STRUCTURE TO LIMITS SHOWN. REPLACE PER TYPICAL SECTIONS, AND PLAN LAYOUT.

MILL EXISTING PAV'T 0.25' OVERLAY TO MATCH

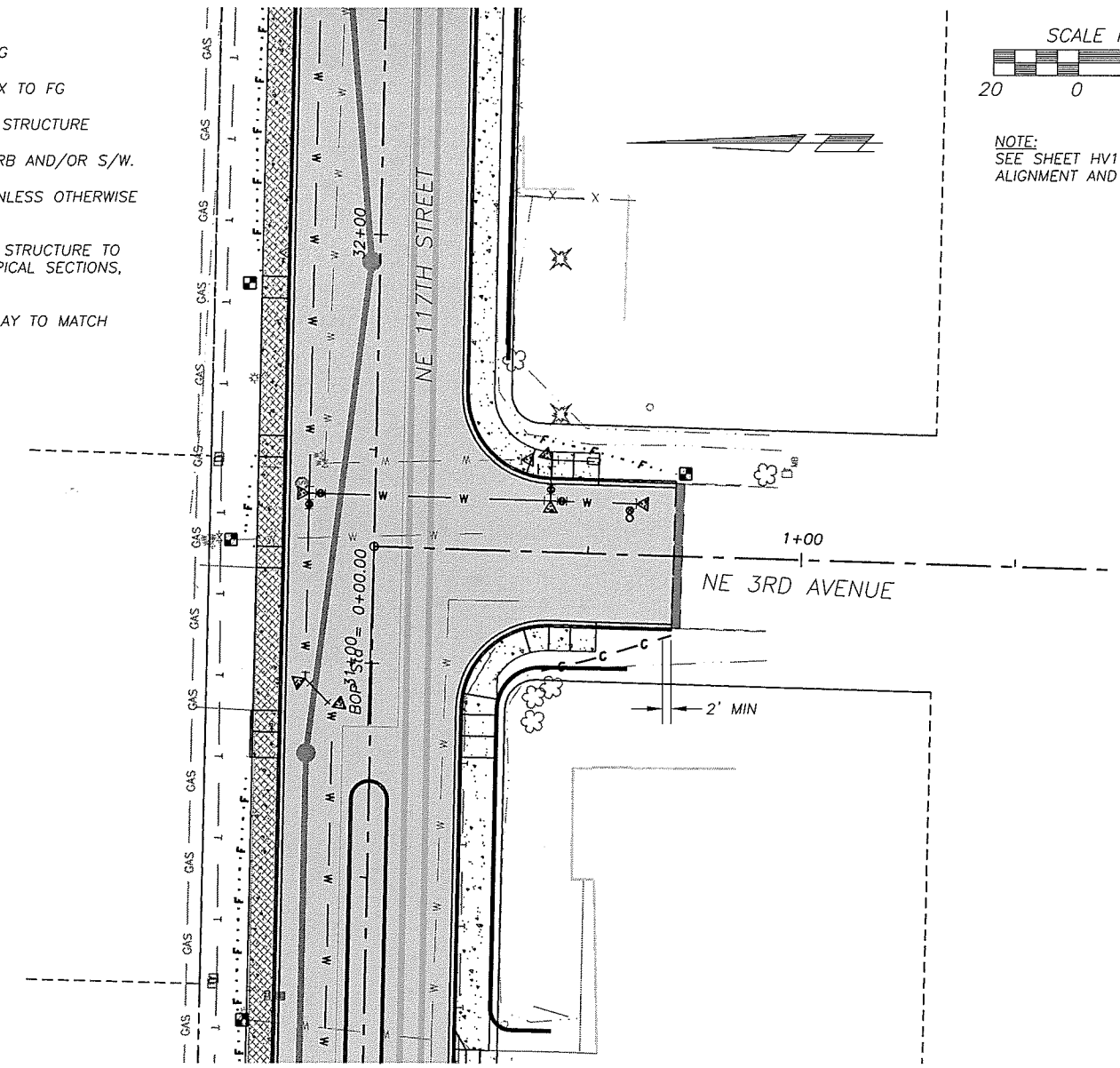

SCALE IN FEET

20 0 20 40

NOTE:
SEE SHEET HV1 FOR HORIZONTAL ALIGNMENT AND CURVE DATA.

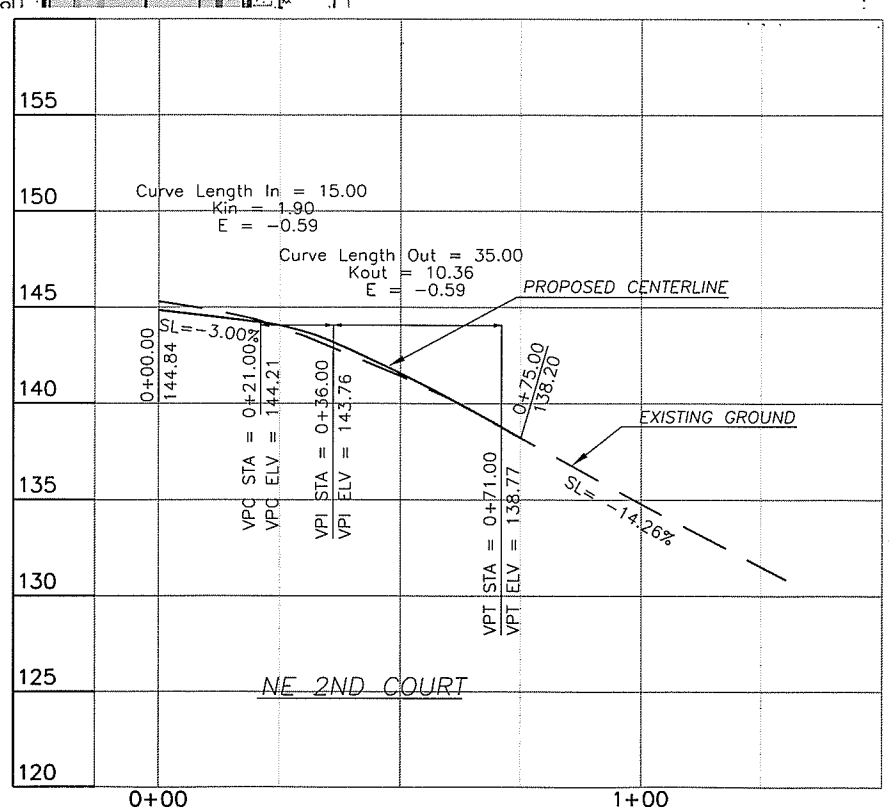

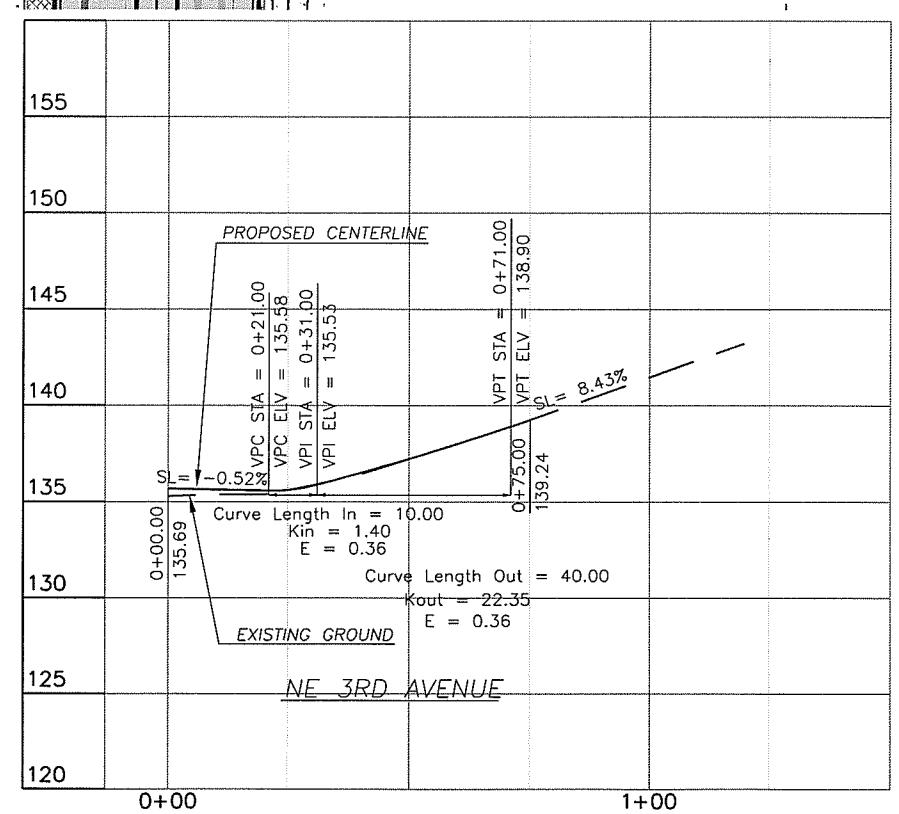

DESIGNED	MME
DRAWN	BAK
CRP	381022
HOR.	1"=20'
VERT.	1"=5'
DATE	10/20/01
DWG:	PP14
SHEET	OF

CALL 48 HOURS BEFORE YOU DIG
1-800-553-4344
"It's the Law"
NORTHWEST UTILITIES NOTIFICATION CENTER

MICHAEL M. EMRICK
STATE OF WASHINGTON
29030
REGISTERED PROFESSIONAL ENGINEER
EXPIRES MAY 26, 2005

DESIGN & ENGINEERING DIVISION
DESIGN SECTION

NW 119TH / 117TH STREET
PLAN & PROFILE NE 2ND COURT AND NE 3RD AVENUE

proud past, promising future
CLARK COUNTY
WASHINGTON

N:\CIP\PROJECTS\381022-NW117-119\DESIGN\DWGS\119PP14.dwg, Layout1, 10/4/2004 4:49:06 PM, begleyk

N:\CIP\PROJECTS\381022-NW117-119\DESIGN\DWGS\119drv1-2.dwg, Layout1, 10/4/2004 4:50:45 PM, begleyk

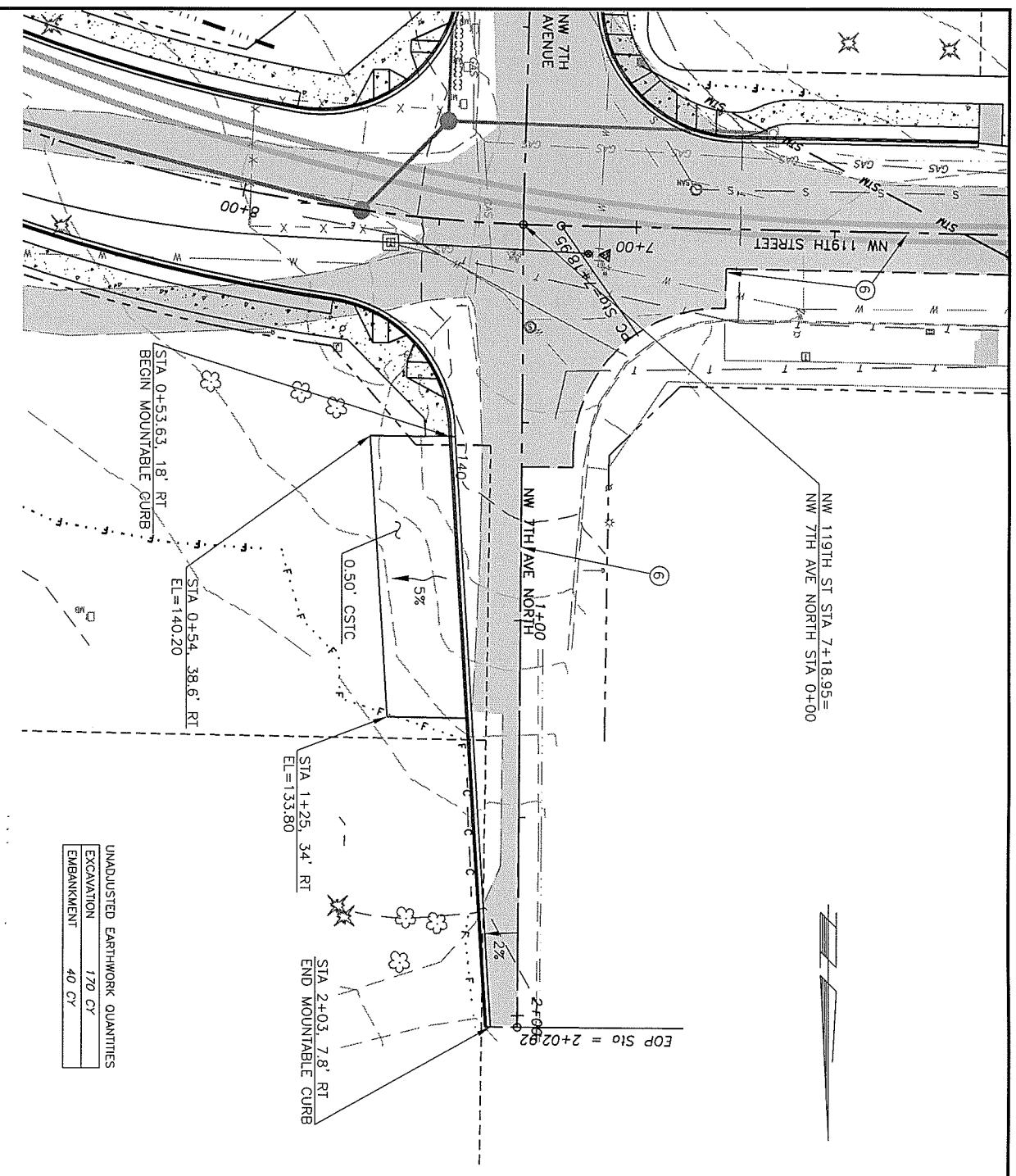

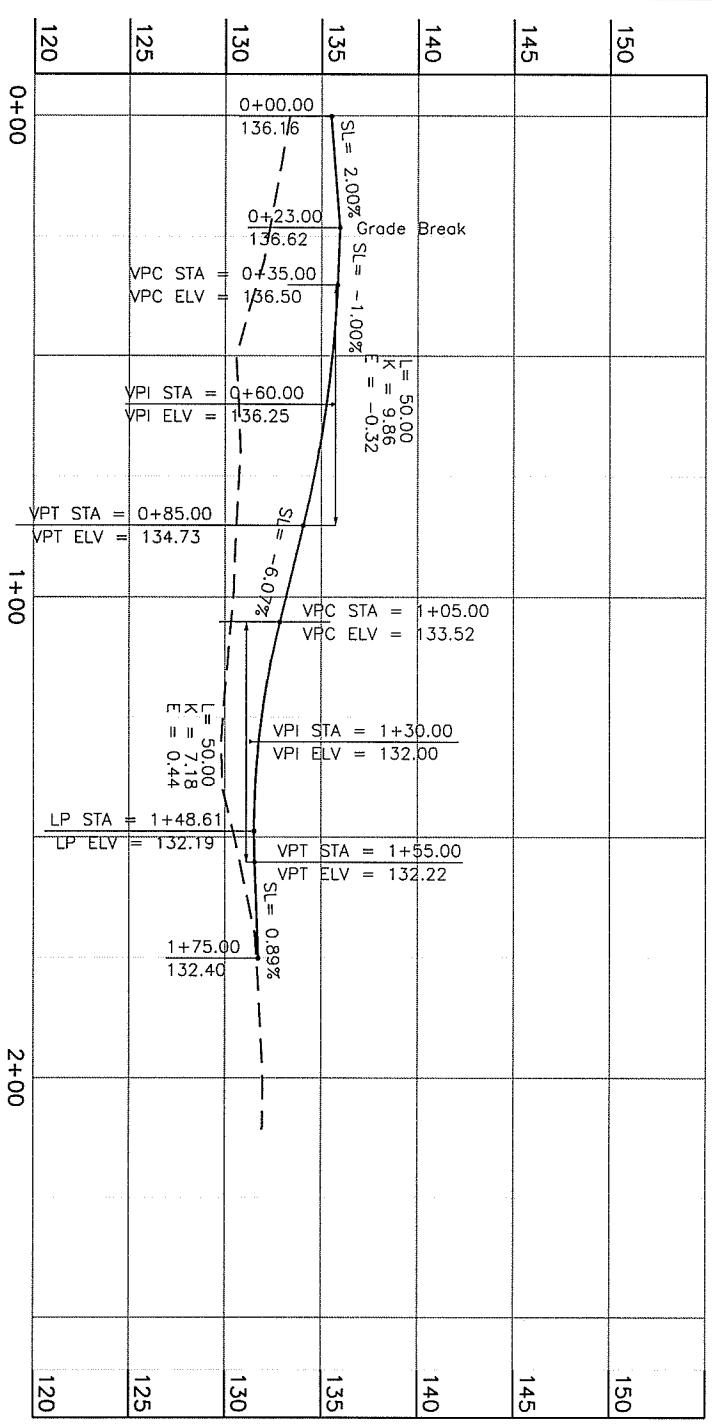

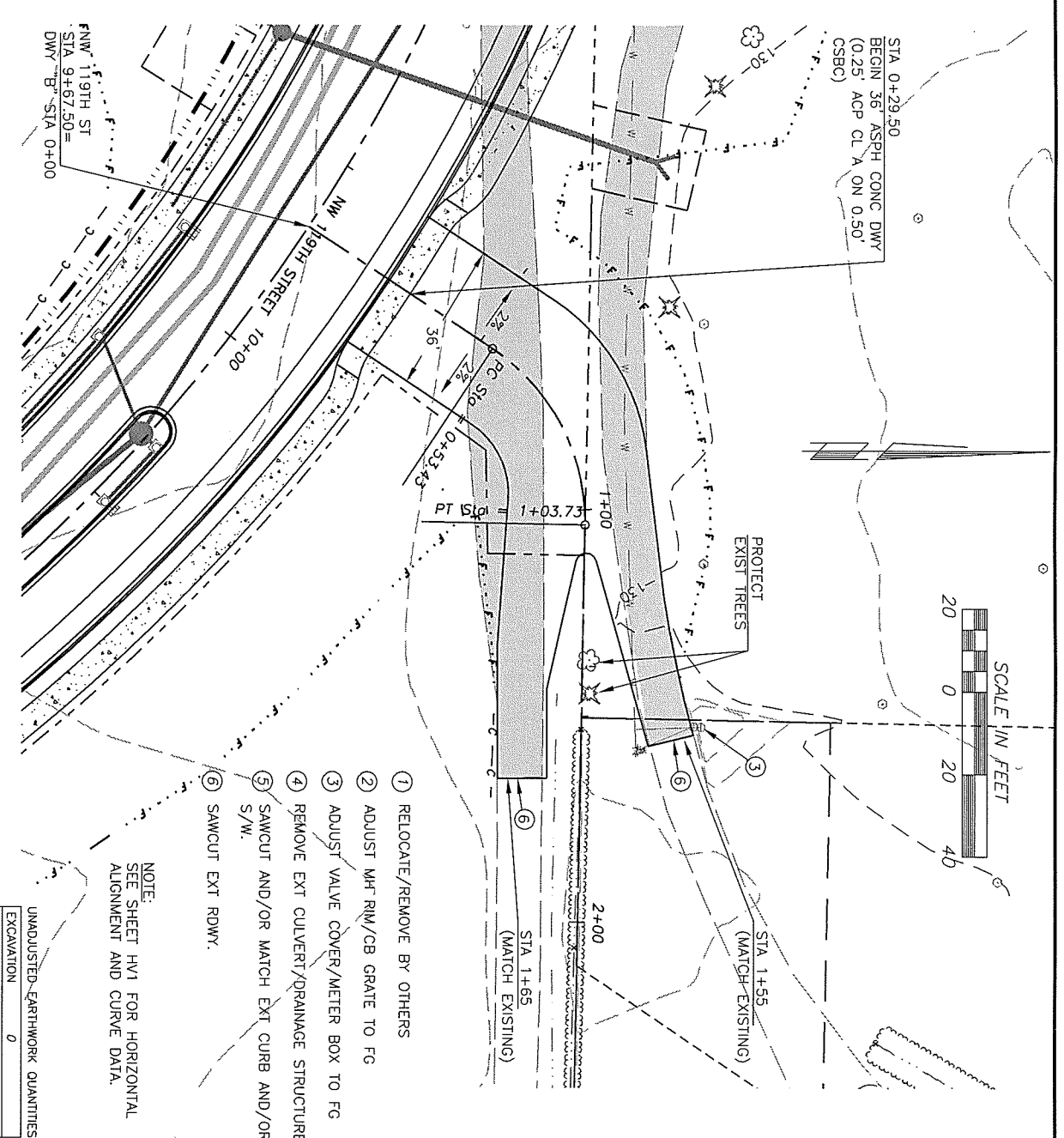

proud past, promising future

CLARK COUNTY
WASHINGTON

DESIGN & ENGINEERING DIVISION
DESIGN SECTION

NW 119TH / 117TH STREET
DRIVEWAY PLAN & PROFILE

THOMAS D. GRANGE
STATE OF WASHINGTON
32068
REGISTERED PROFESSIONAL ENGINEER
EXPIRES: JANUARY 20, 2006

CALL 48 HOURS BEFORE YOU DIG
1-800-553-4344
"It's the Law"
NORTHWEST UTILITIES NOTIFICATION CENTER

DESIGNED	MME
DRAWN	BAK
CRP	381022
HOR.	1"=20'
VERT.	1"=5'
DATE	10/20/01
DWG:	DRV1
SHEET	OF

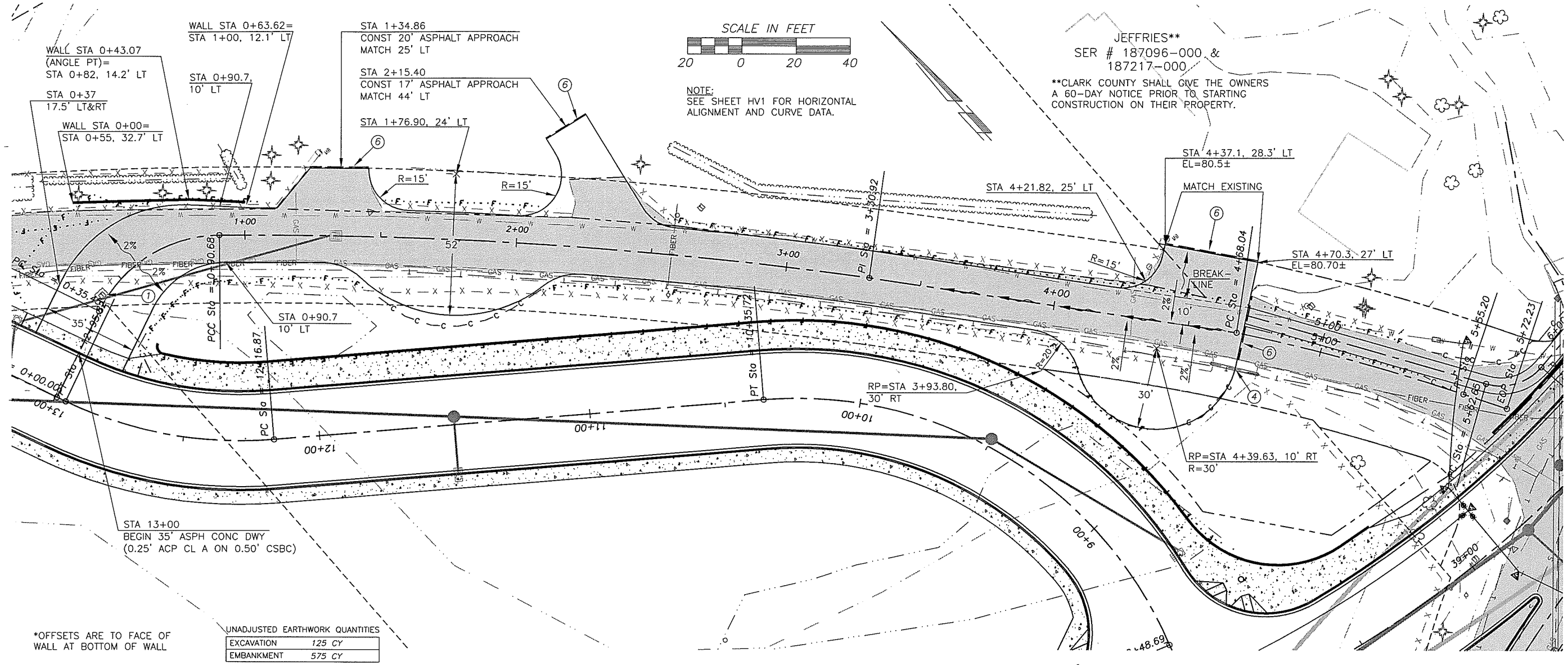

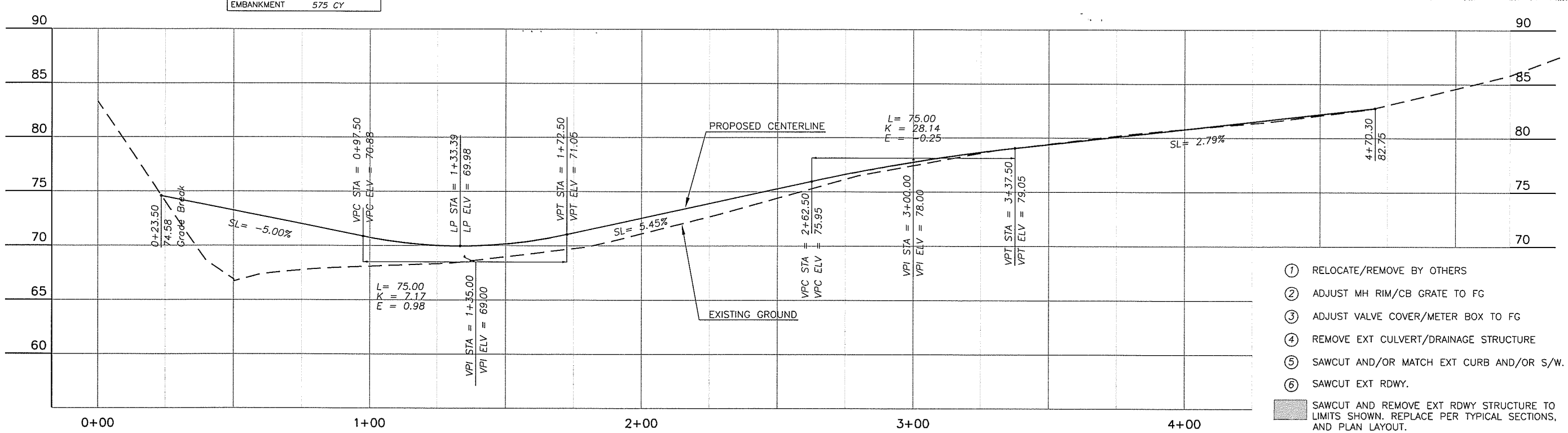

BASSEL DRIVE PROFILE

1. RELOCATE/REMOVE BY OTHERS
2. ADJUST MH RIM/CB GRATE TO FG
3. ADJUST VALVE COVER/METER BOX TO FG
4. REMOVE EXT CULVERT/DRAINAGE STRUCTURE
5. SAWCUT AND/OR MATCH EXT CURB AND/OR S/W.
6. SAWCUT EXT RDWY.

SAWCUT AND REMOVE EXT RDWY STRUCTURE TO LIMITS SHOWN. REPLACE PER TYPICAL SECTIONS, AND PLAN LAYOUT.

MILL EXISTING PAV'T 0.25' OVERLAY TO MATCH

DESIGNED MME
DRAWN BAK
CRP 381022
HOR. 1"=20'
VERT. 1"=5'
DATE 10/20/01
DWG: DRV2
SHEET OF

CALL 48 HOURS BEFORE YOU DIG
1-800-553-4344 "It's the Law"
NORTHWEST UTILITIES NOTIFICATION CENTER

THOMAS D. GRANGE STATE OF WASHINGTON 32068 REGISTERED PROFESSIONAL ENGINEER
EXPIRES: JANUARY 20, 2005

DESIGN & ENGINEERING DIVISION
DESIGN SECTION

NW 119TH / 117TH STREET
DRIVEWAY PLAN & PROFILE

proud past, promising future
CLARK COUNTY WASHINGTON

N:\CIP\PROJECTS\381022-NW117-119\DESIGN\DWGS\119drv1-2.dwg, Layout1 (2), 10/6/2004 4:34:09 PM, begleyk

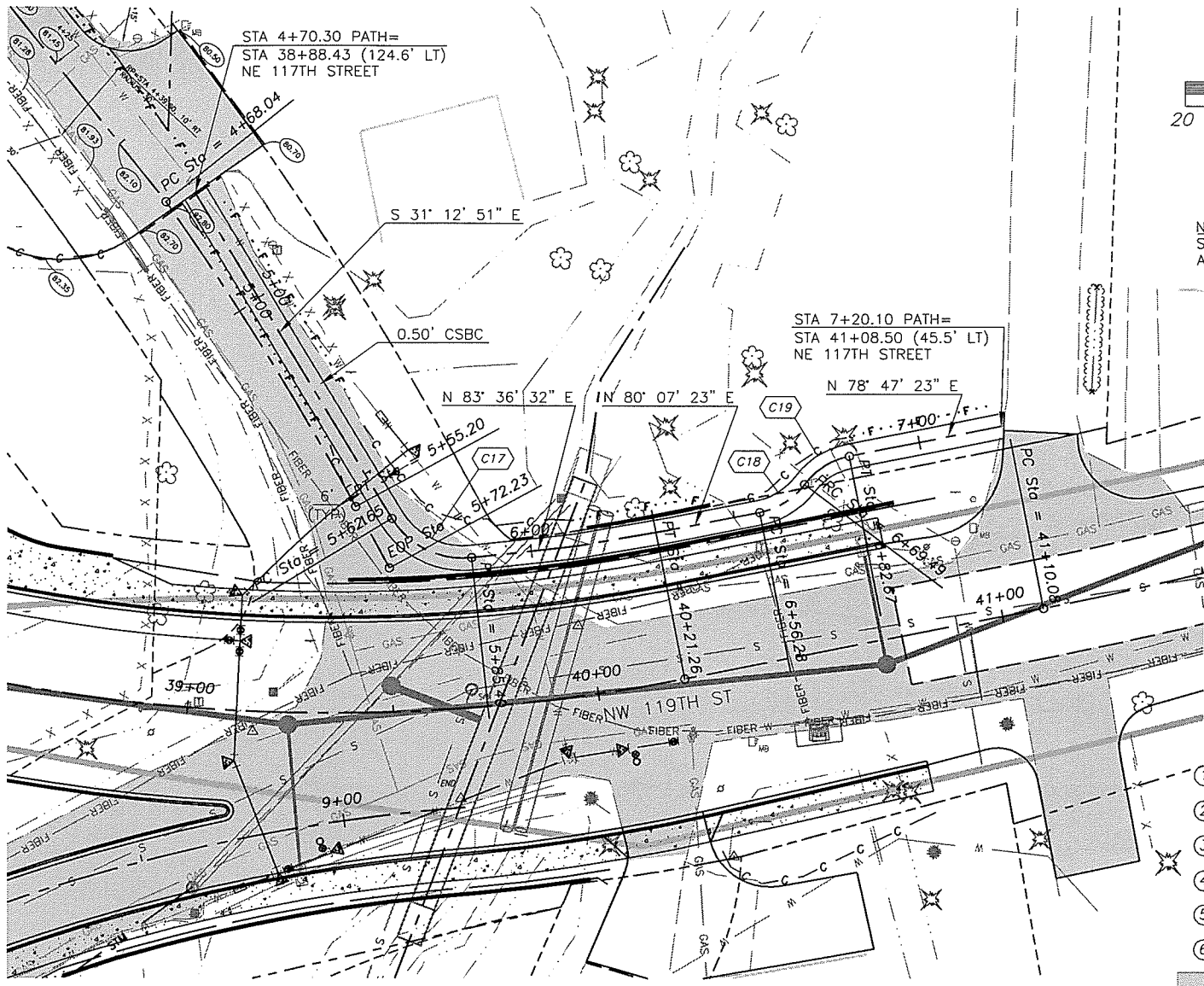

SCALE IN FEET

20 0 20 40

NOTE:
SEE SHEET HV1 FOR HORIZONTAL ALIGNMENT AND CURVE DATA.

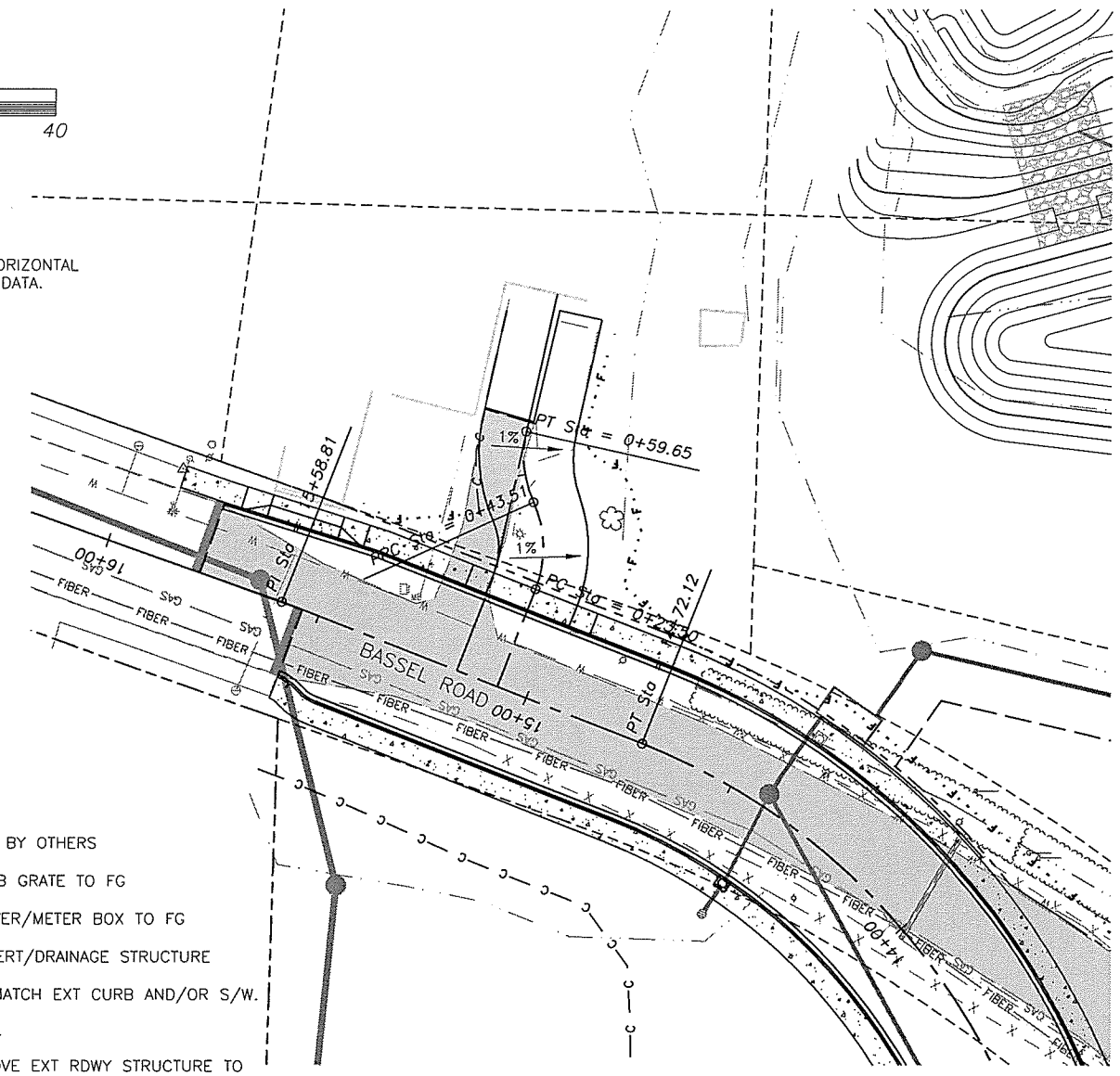

1. RELOCATE/REMOVE BY OTHERS
2. ADJUST MH RIM/CB GRATE TO FG
3. ADJUST VALVE COVER/METER BOX TO FG
4. REMOVE EXT CULVERT/DRAINAGE STRUCTURE
5. SAWCUT AND/OR MATCH EXT CURB AND/OR S/W.
6. SAWCUT EXT RDWY.

SAWCUT AND REMOVE EXT RDWY STRUCTURE TO LIMITS SHOWN. REPLACE PER TYPICAL SECTIONS, AND PLAN LAYOUT.

MILL EXISTING PAV'T 0.25' OVERLAY TO MATCH

NUMBER	DELTA ANGLE	TANGENT	RADIUS	ARC LENGTH	CHORD LENGTH
C17	65° 10' 37"	12.78'	20'	22.75'	21.54'
C18	42° 02' 11"	6.92'	18'	13.21'	12.91'
C19	41° 56' 42"	6.90'	18'	13.18'	12.89'

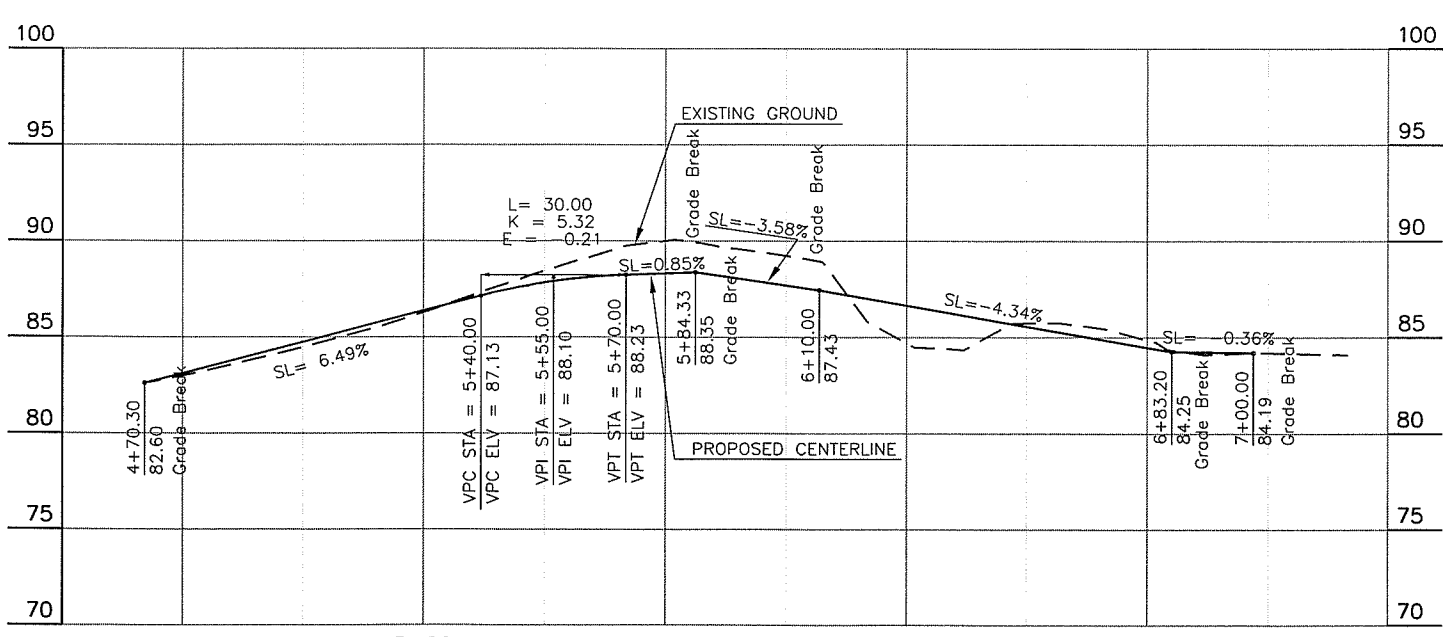

PATH PROFILE

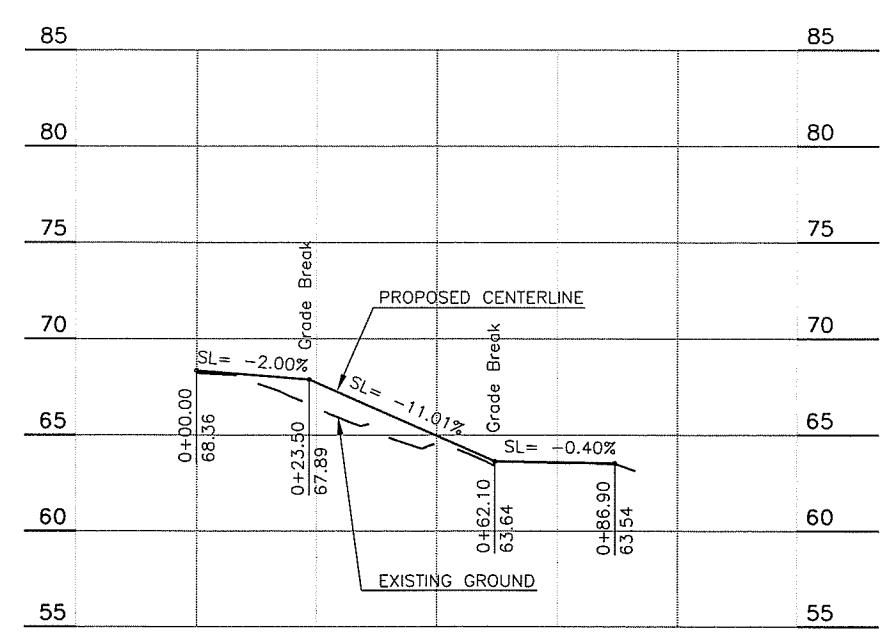

SMITH DRIVE PROFILE

DESIGNED	MME
DRAWN	BAK
CRP	381022
HOR.	1"=20'
VERT.	1"=5'
DATE	10/20/01
DWG:	DRV3
SHEET	OF

CALL 48 HOURS BEFORE YOU DIG 1-800-553-4344 "It's the Law" NORTHWEST UTILITIES NOTIFICATION CENTER

STATE OF WASHINGTON LEONARD D. GRANGE 37260 REGISTERED PROFESSIONAL ENGINEER
EXPIRES: JANUARY 20, 2006

DESIGN & ENGINEERING DIVISION
DESIGN SECTION

NW 119TH / 117TH STREET
DRIVEWAY PLAN & PROFILE

proud past, promising future
CLARK COUNTY WASHINGTON

N:\CIP\PROJECTS\381022-NW117-119\DESIGN\DWGS\119drv3.dwg, Layout1 (3), 10/4/2004 4:52:06 PM, begleyk

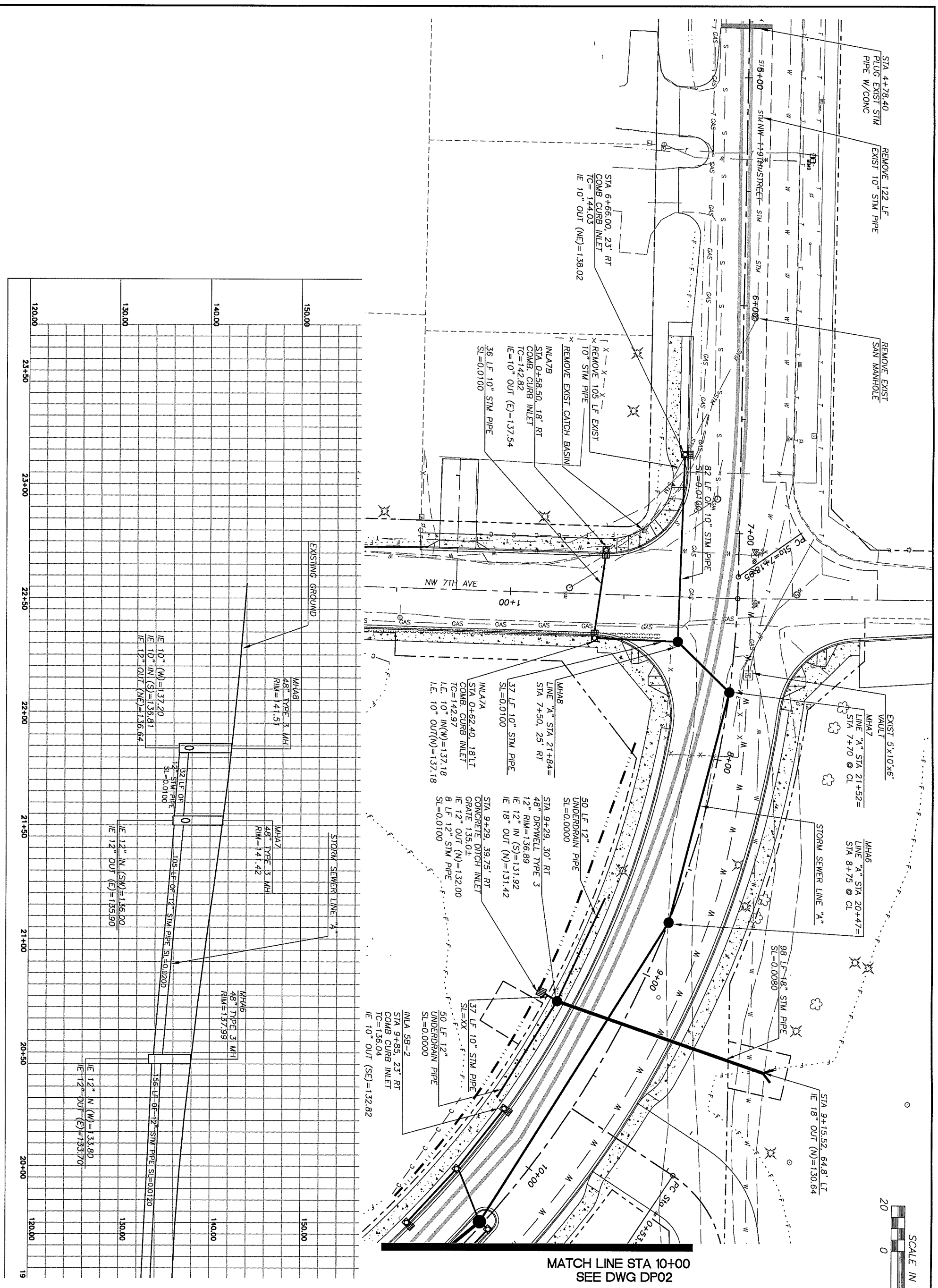

proud past, promising future

CLARK COUNTY
WASHINGTON

DESIGN & ENGINEERING DIVISION
DESIGN SECTION

NW 119TH / 117TH STREET
DRAINAGE PLAN B.O.P. TO STA 10+00

MICHAEL M. EMRICK
STATE OF WASHINGTON
29030
REGISTERED
PROFESSIONAL ENGINEER
EXPIRES: MAY 26, 2005

CALL 48 HOURS BEFORE YOU DIG
1-800-553-4344
"It's the Law"
NORTHWEST UTILITIES NOTIFICATION CENTER

DESIGNED	MME
DRAWN	BAK
CRP	381022
HOR.	1"=20'
VERT.	1"=5'
DATE	7/14/01
DWG:	DP01
SHEET	OF

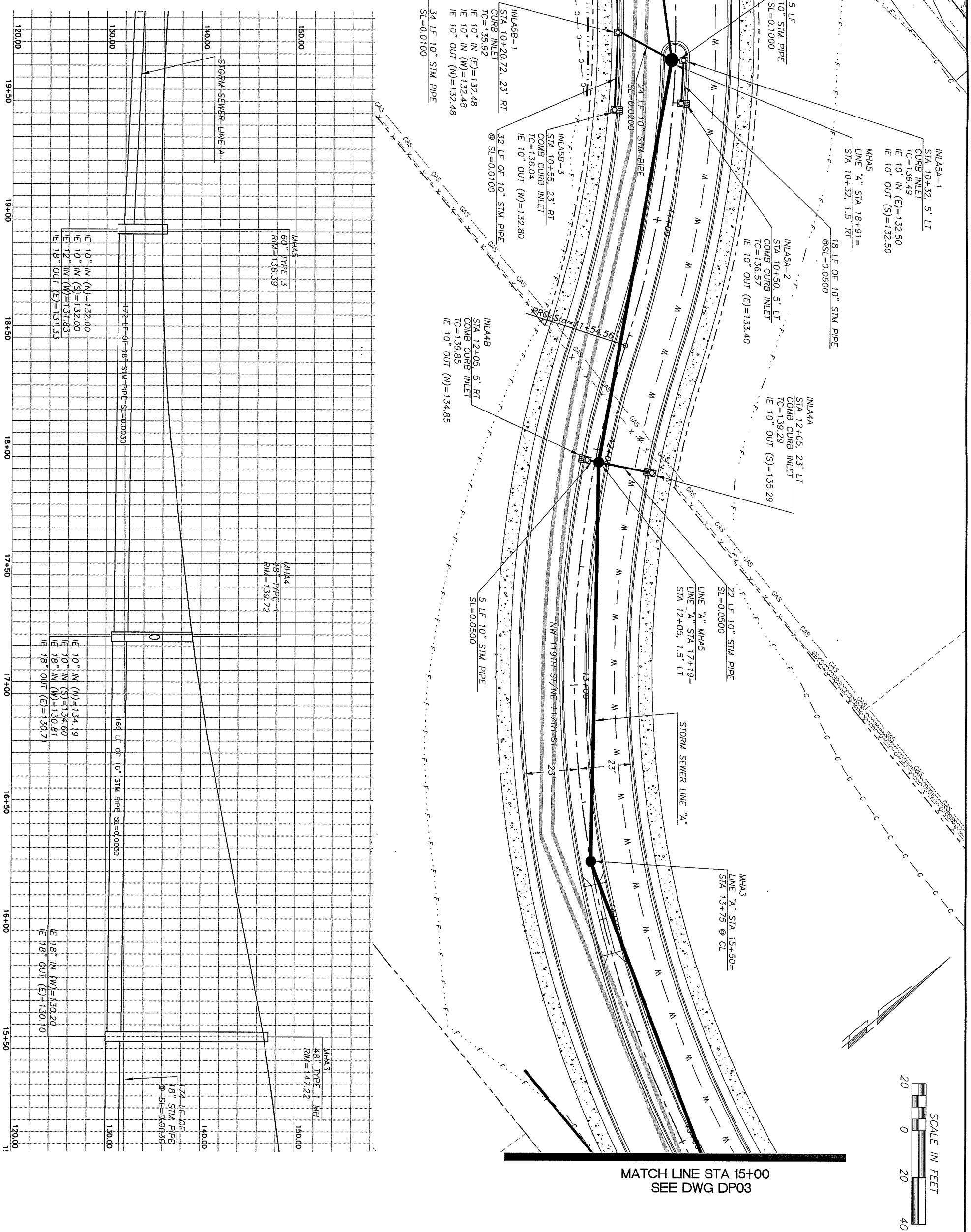

proud past, promising future

CLARK COUNTY
WASHINGTON

DESIGN & ENGINEERING DIVISION
DESIGN SECTION

NW 119TH / 117TH STREET
DRAINAGE PLAN STA 10+00 TO STA 15+00

MICHAEL M. EMRICK
STATE OF WASHINGTON
29030
REGISTERED
PROFESSIONAL ENGINEER
EXPIRES:MAY 26, 2005

CALL 48 HOURS BEFORE YOU DIG
1-800-553-4344
"It's the Low"
NORTHWEST UTILITIES NOTIFICATION CENTER

DESIGNED	MME
DRAWN	BAK
CRP	381022
HOR.	1"=20'
VERT.	1"=5'
DATE	7/14/01
DWG:	DP02
SHEET	OF

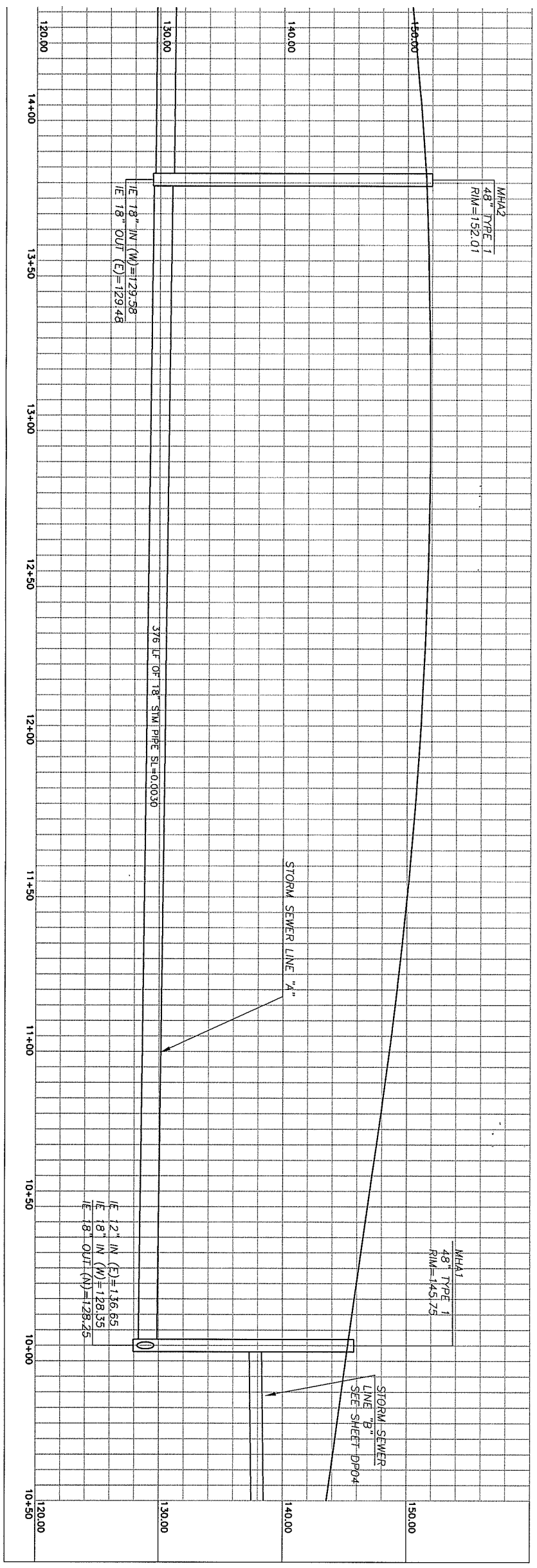

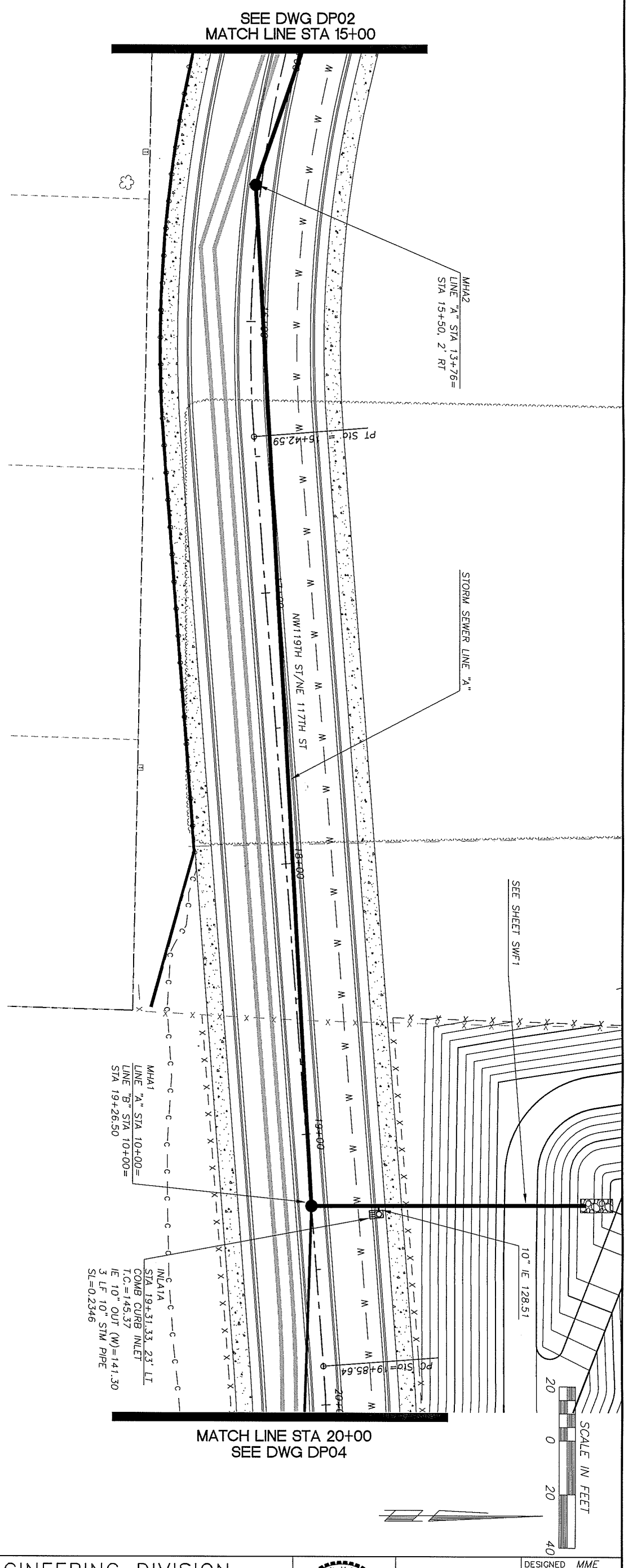

proud past, promising future

CLARK COUNTY
WASHINGTON

DESIGN & ENGINEERING DIVISION
DESIGN SECTION

NW 119TH / 117TH STREET
DRAINAGE PLAN STA 15+00 TO STA 20+00

MICHAEL M. EMRICK
STATE OF WASHINGTON
29030
REGISTERED
PROFESSIONAL ENGINEER
EXPIRES: MAY 26, 2005

CALL 48 HOURS BEFORE YOU DIG
1-800-553-4344
"It's the Law"
NORTHWEST UTILITIES NOTIFICATION CENTER

DESIGNED	MME
DRAWN	BAK
CRP	381022
HOR.	1"=20'
VERT.	1"=5'
DATE	7/14/01
DWG:	DP03
SHEET	OF

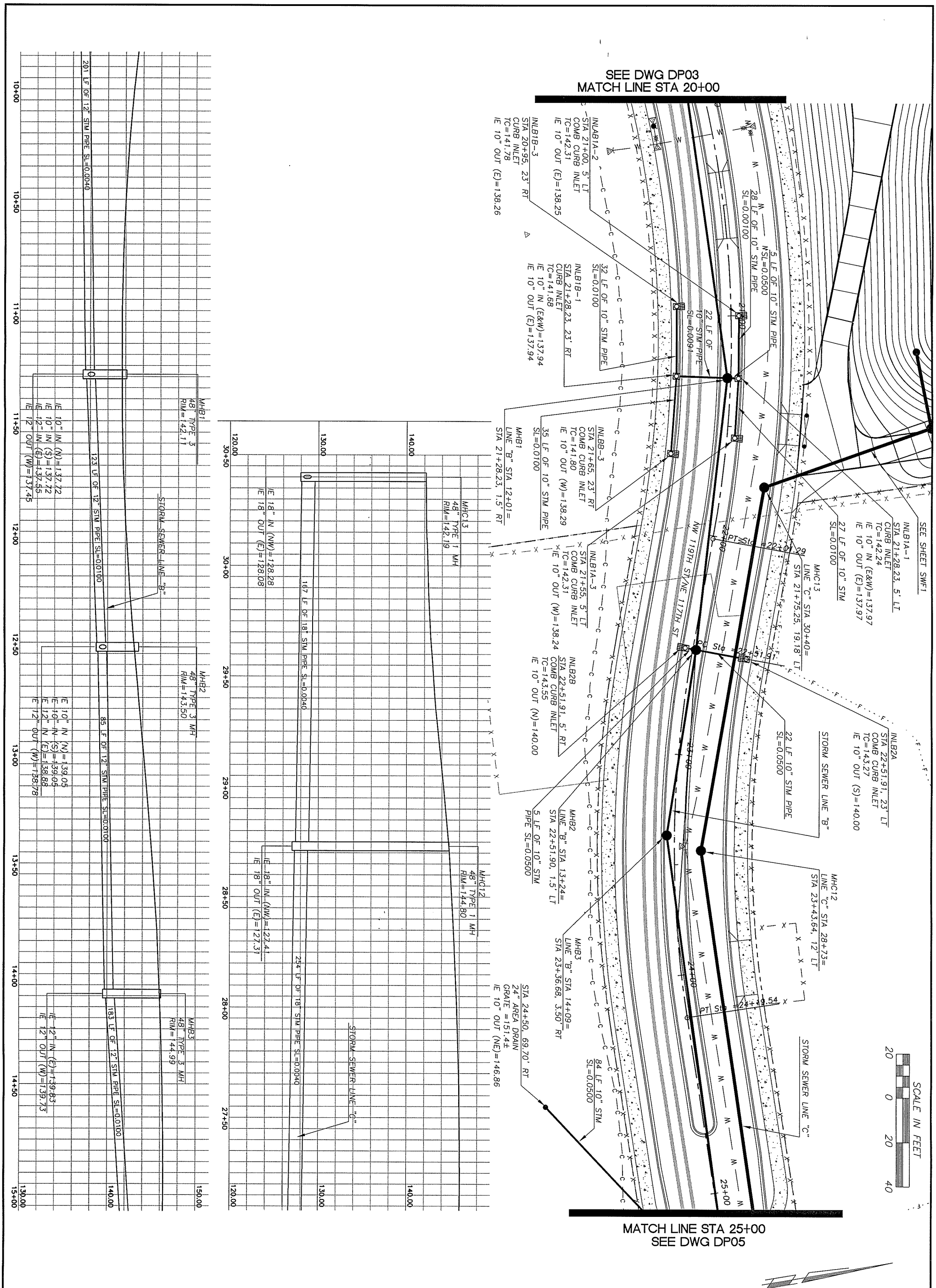

proud past, promising future

CLARK COUNTY
WASHINGTON

DESIGN & ENGINEERING DIVISION
DESIGN SECTION

NW 119TH / 117TH STREET
DRAINAGE PLAN STA 20+00 TO STA 25+00

MICHAEL M. ENRICK
STATE OF WASHINGTON
29030
REGISTERED
PROFESSIONAL ENGINEER
EXPIRES: MAY 26, 2005

CALL 48 HOURS BEFORE YOU DIG
1-800-553-4344
"It's the Law"
NORTHWEST UTILITIES NOTIFICATION CENTER

DESIGNED	MME
DRAWN	BAK
CRP	381022
HOR.	1"=20'
VERT.	1"=5'
DATE	7/14/01
DWG:	DP04
SHEET	OF

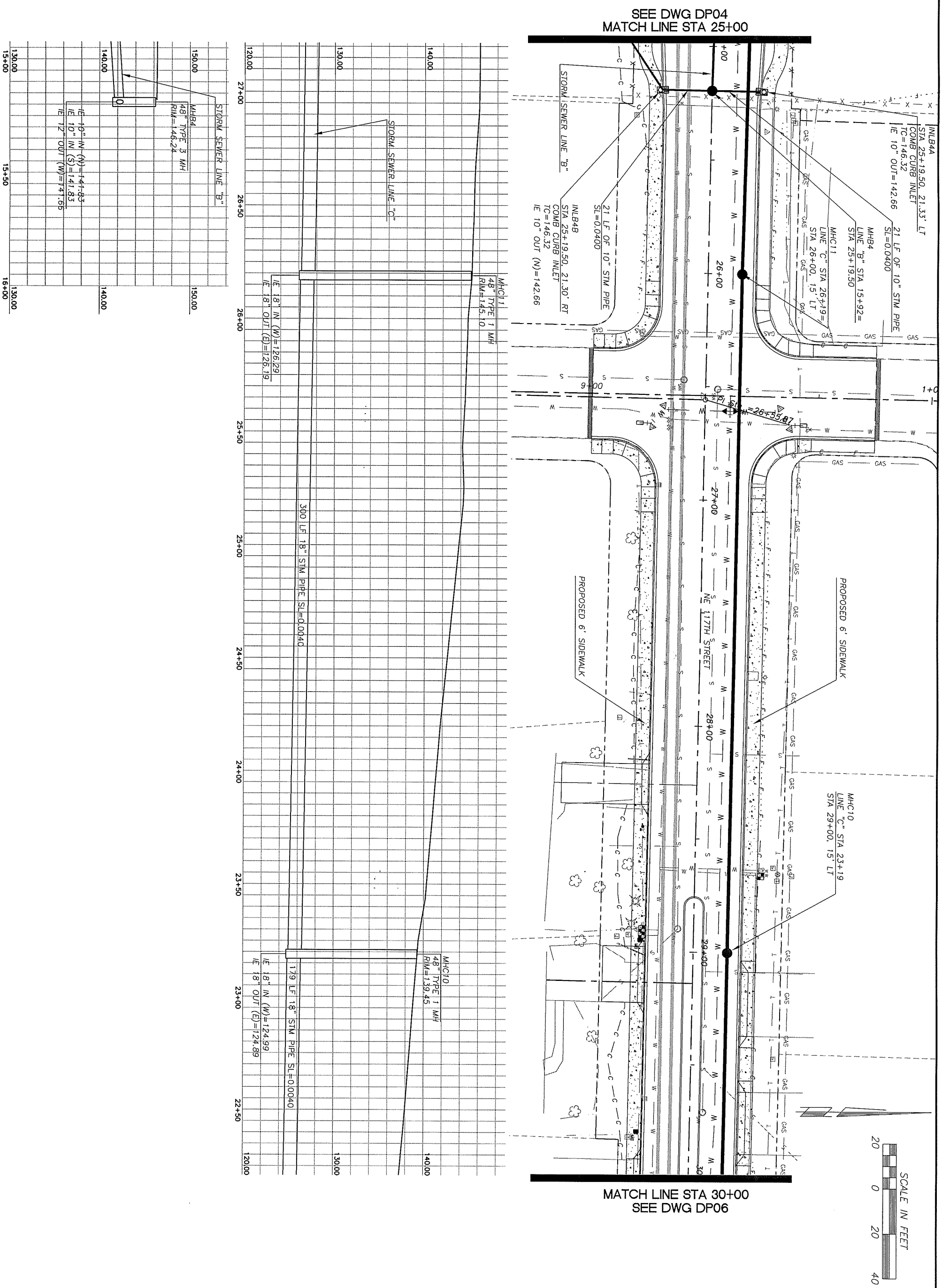

proud past, promising future

CLARK COUNTY
WASHINGTON

DESIGN & ENGINEERING DIVISION
DESIGN SECTION

NW 119TH / 117TH STREET
DRAINAGE PLAN STA 25+00 TO STA 30+00

MICHAEL M. EMRICK
STATE OF WASHINGTON
29030
REGISTERED
PROFESSIONAL ENGINEER
EXPIRES: MAY 26, 2005

CALL 48 HOURS BEFORE YOU DIG
1-800-553-4344
"It's the Law"
NORTHWEST UTILITIES NOTIFICATION CENTER

DESIGNED	MME
DRAWN	BAK
CRP	381022
HOR.	1"=20'
VERT.	1"=5'
DATE	7/14/01
DWG:	DP05
SHEET	OF

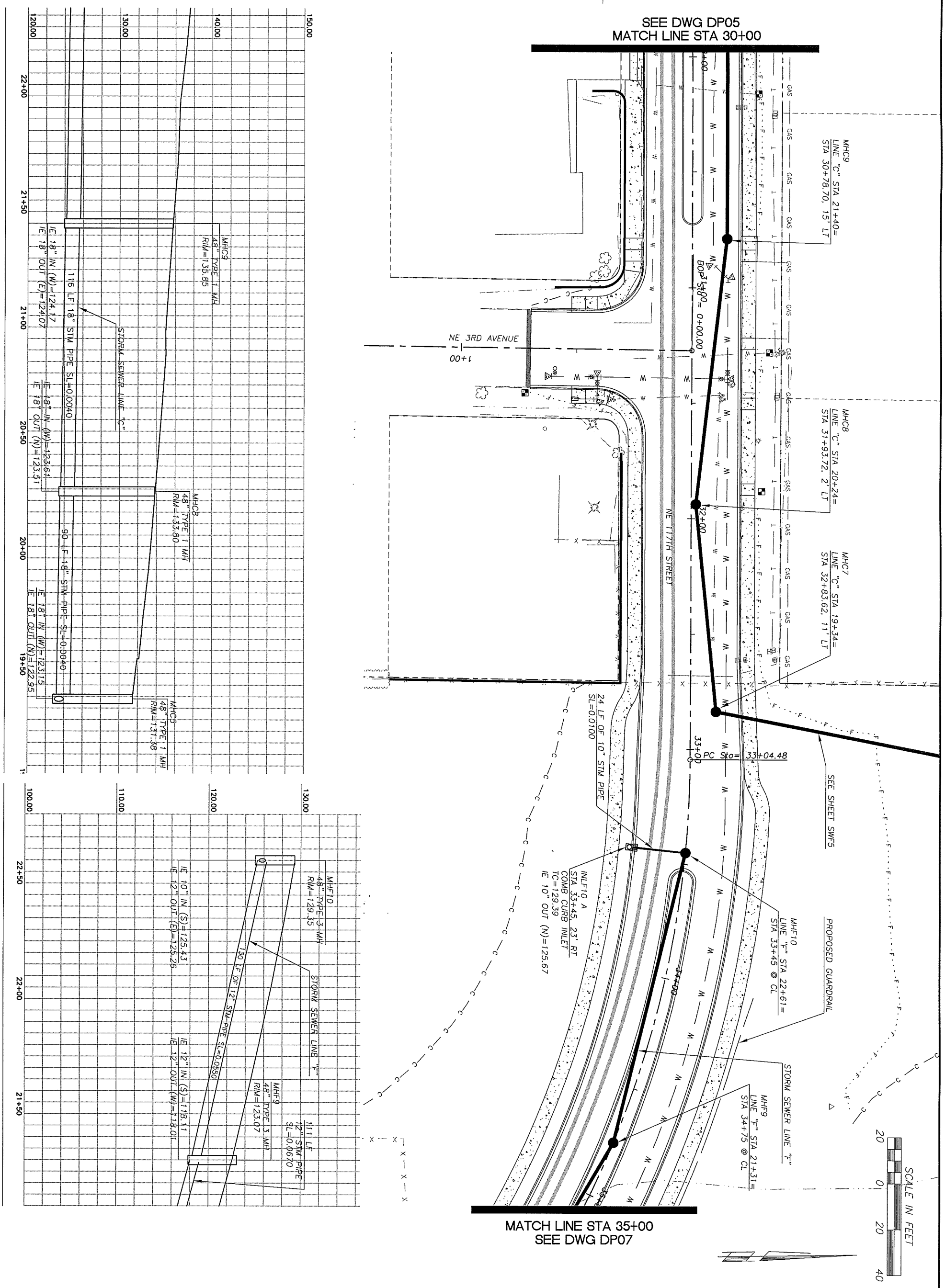

proud past, promising future

CLARK COUNTY
WASHINGTON

DESIGN & ENGINEERING DIVISION
DESIGN SECTION

NW 119TH / 117TH STREET
DRAINAGE PLAN STA 30+00 TO STA 35+00

MICHAEL M. EMRICK
STATE OF WASHINGTON
29030
REGISTERED
PROFESSIONAL ENGINEER
EXPIRES: MAY 26, 2005

CALL 48 HOURS BEFORE YOU DIG
1-800-553-4344
"It's the Law"
NORTHWEST UTILITIES NOTIFICATION CENTER

DESIGNED	MME
DRAWN	BAK
CRP	381022
HOR.	1"=20'
VERT.	1"=5'
DATE	7/14/01
DWG:	DP06
SHEET	OF

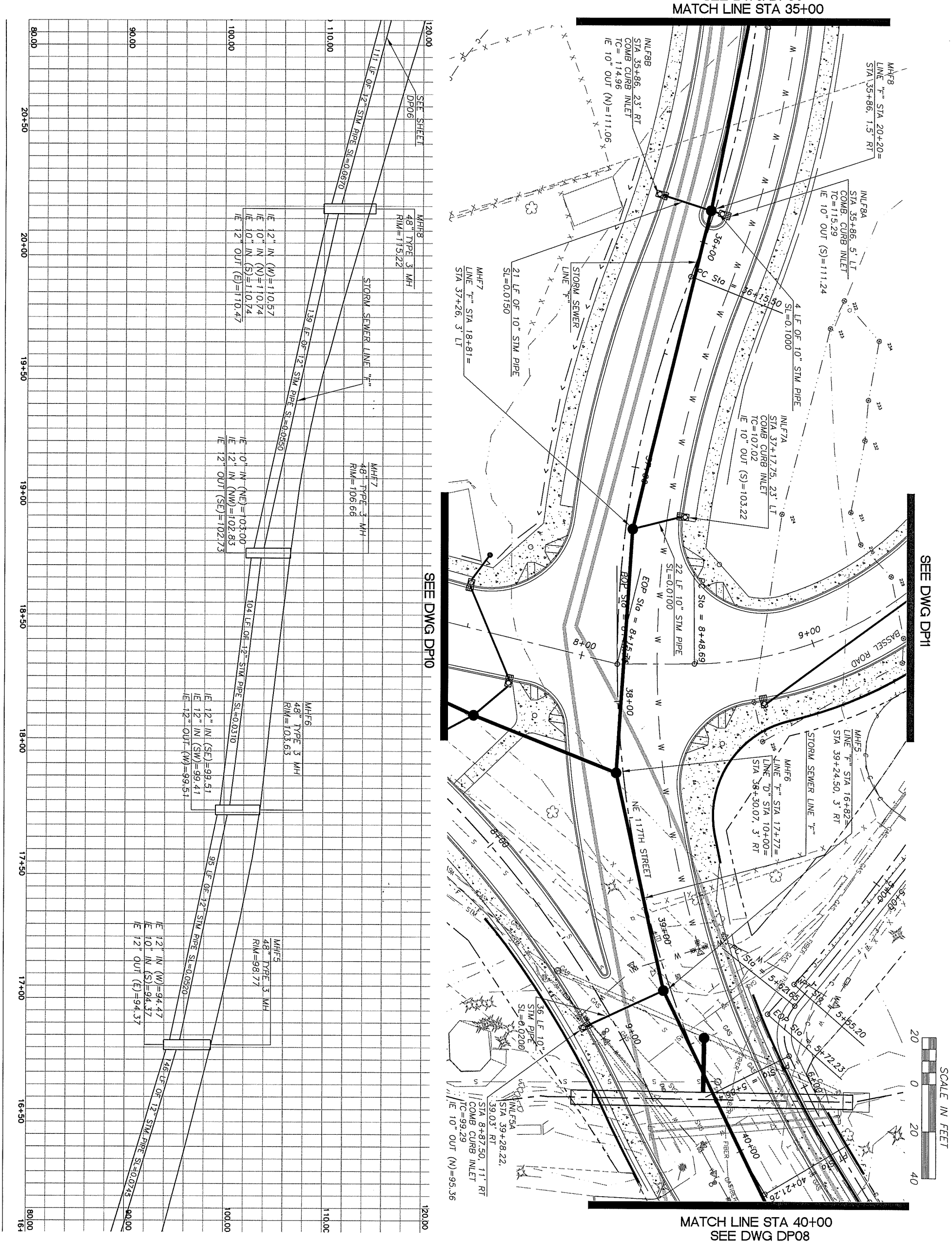

proud past, promising future

CLARK COUNTY
WASHINGTON

DESIGN & ENGINEERING DIVISION
DESIGN SECTION

NW 119TH / 117TH STREET
DRAINAGE PLAN STA 35+00 TO STA 40+00

MICHAEL M. ENRICK
STATE OF WASHINGTON
29030
REGISTERED
PROFESSIONAL ENGINEER
EXPIRES: MAY 26, 2005

CALL 48 HOURS BEFORE YOU DIG
1-800-553-4344
"It's the Law"
NORTHWEST UTILITIES NOTIFICATION CENTER

DESIGNED	MME
DRAWN	BAK
CRP	381022
HOR.	1"=20'
VERT.	1"=5'
DATE	7/14/01
DWG:	DP07
SHEET	OF

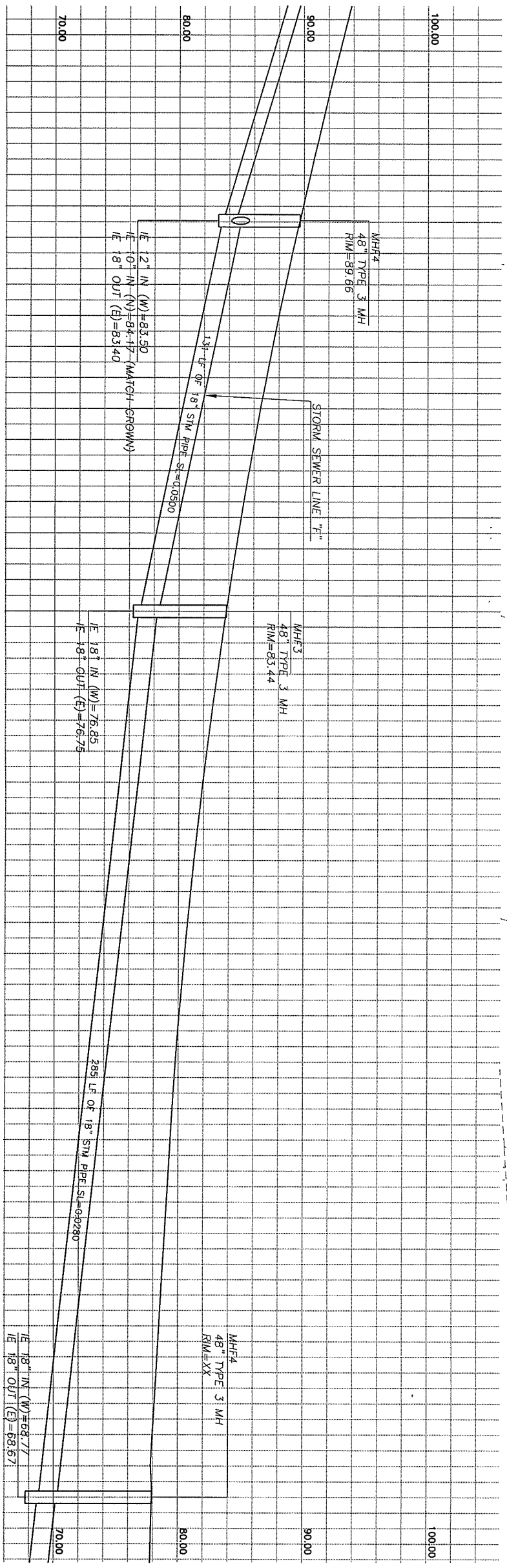

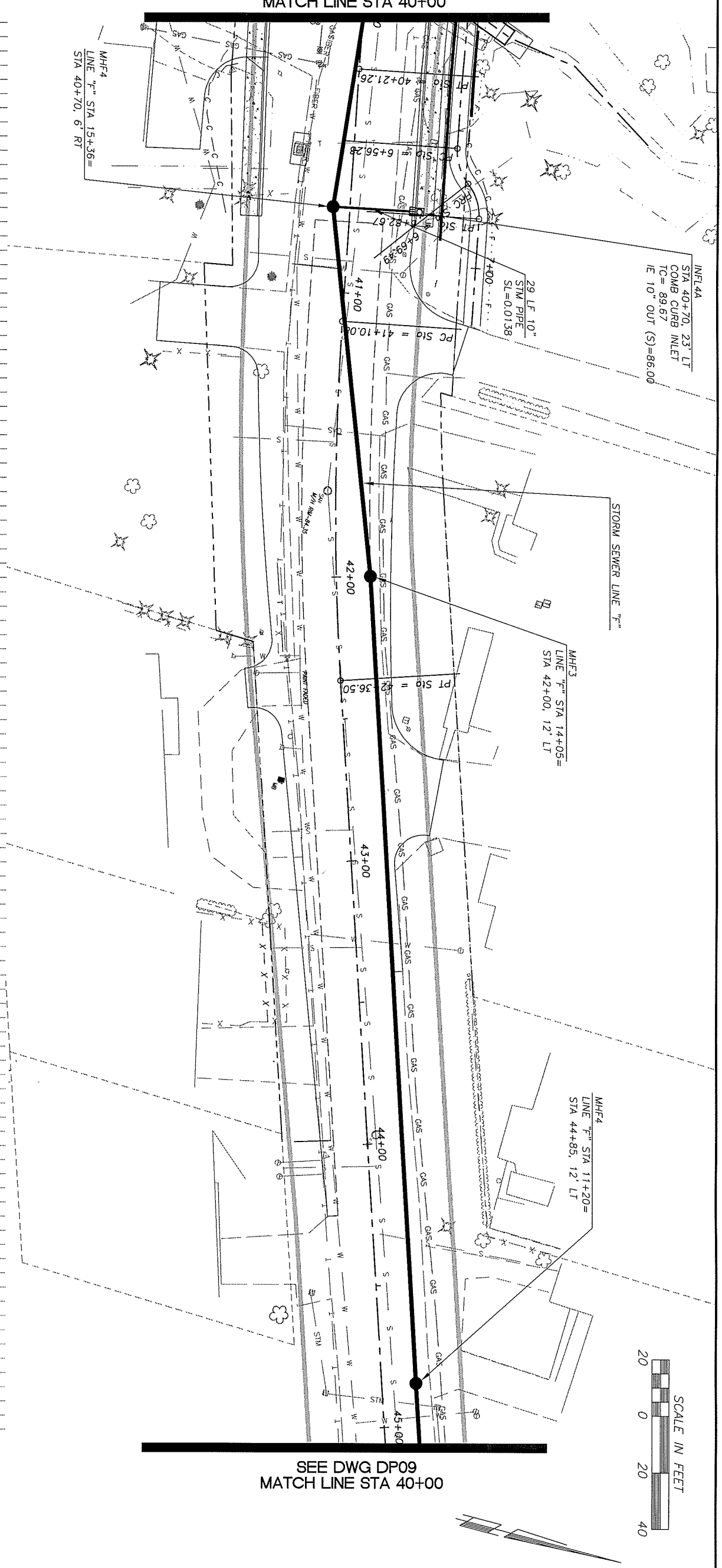

proud past, promising future

CLARK COUNTY
WASHINGTON

DESIGN & ENGINEERING DIVISION
DESIGN SECTION

NW 119TH / 117TH STREET
DRAINAGE PLAN STA 40+00 TO E.O.P.

MICHAEL M. EMRICK
STATE OF WASHINGTON
29030
REGISTERED
PROFESSIONAL ENGINEER
EXPIRES:MAY 26, 2005

CALL 48 HOURS BEFORE YOU DIG
1-800-553-4344
"It's the Law"
NORTHWEST UTILITIES NOTIFICATION CENTER

DESIGNED	MME
DRAWN	BAK
CRP	381022
HOR.	1"=20'
VERT.	1"=5'
DATE	7/14/01
DWG:	DP08
SHEET	OF

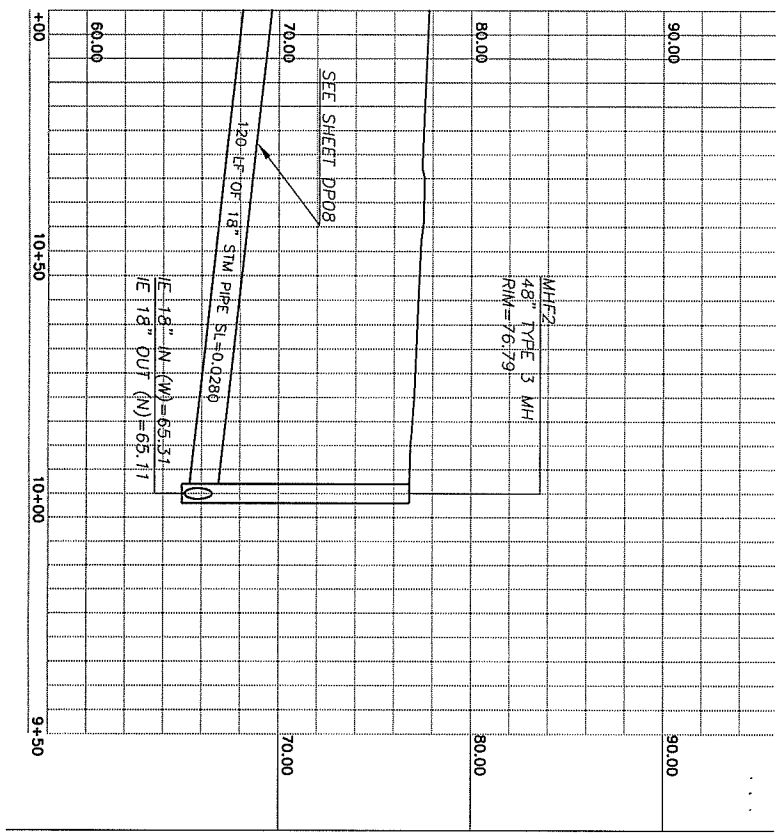

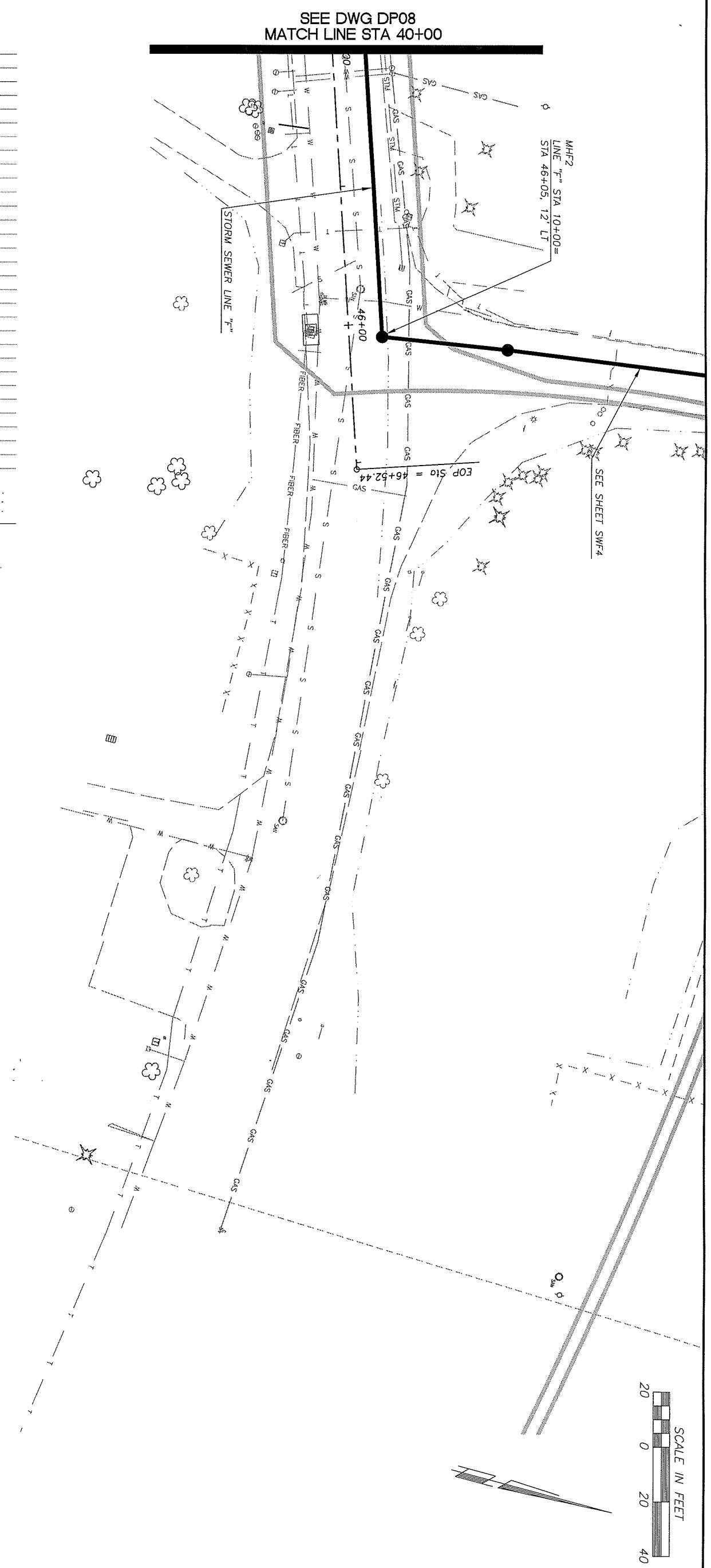

proud past, promising future

CLARK COUNTY
WASHINGTON

DESIGN & ENGINEERING DIVISION
DESIGN SECTION

NW 119TH / 117TH STREET
DRAINAGE PLAN STA 40+00 TO E.O.P.

MICHAEL M. EMRICK
STATE OF WASHINGTON
29030
REGISTERED
PROFESSIONAL ENGINEER
EXPIRES: MAY 26, 2005

CALL 48 HOURS BEFORE YOU DIG
1-800-553-4344
"It's the Law"
NORTHWEST UTILITIES NOTIFICATION CENTER

DESIGNED	MME
DRAWN	BAK
CRP	381022
HOR.	1"=20'
VERT.	1"=5'
DATE	7/14/01
DWG:	DP09
SHEET	OF

N:\CIP\PROJECTS\381022-NW117-119\DESIGN\DWGS\119dp11.dwg, DP11, 10/6/2004 5:15:02 PM, begleyk

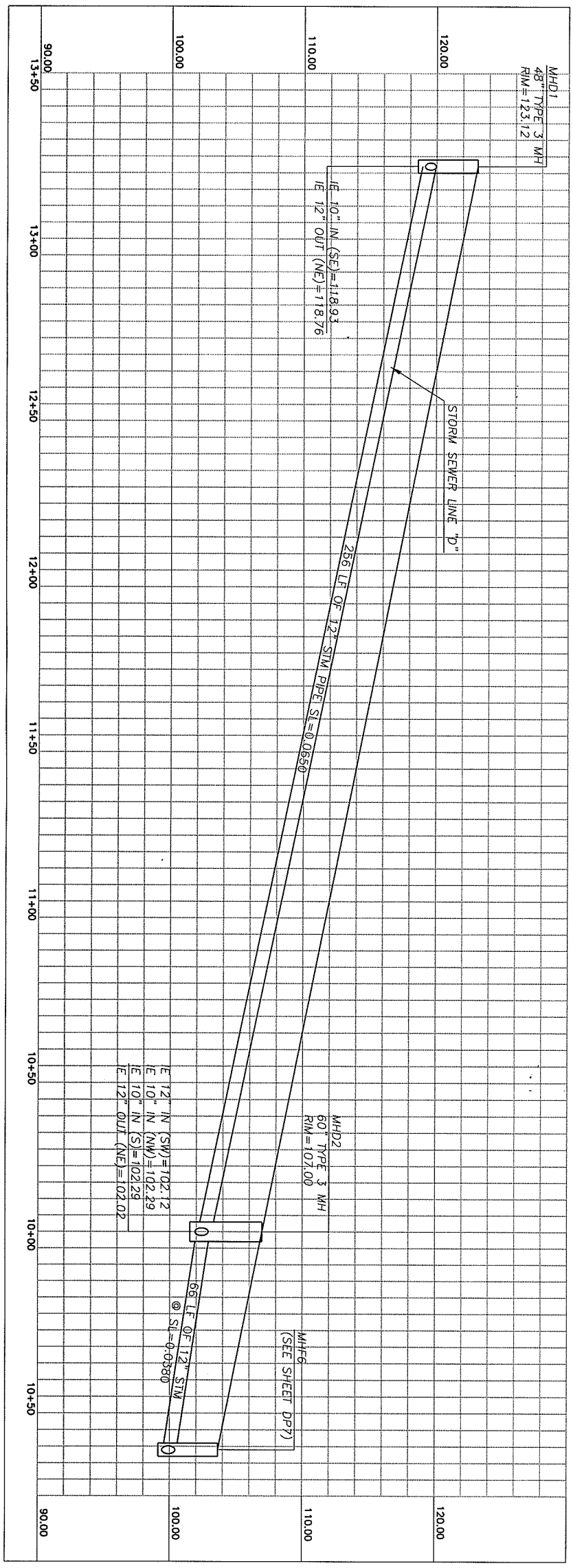

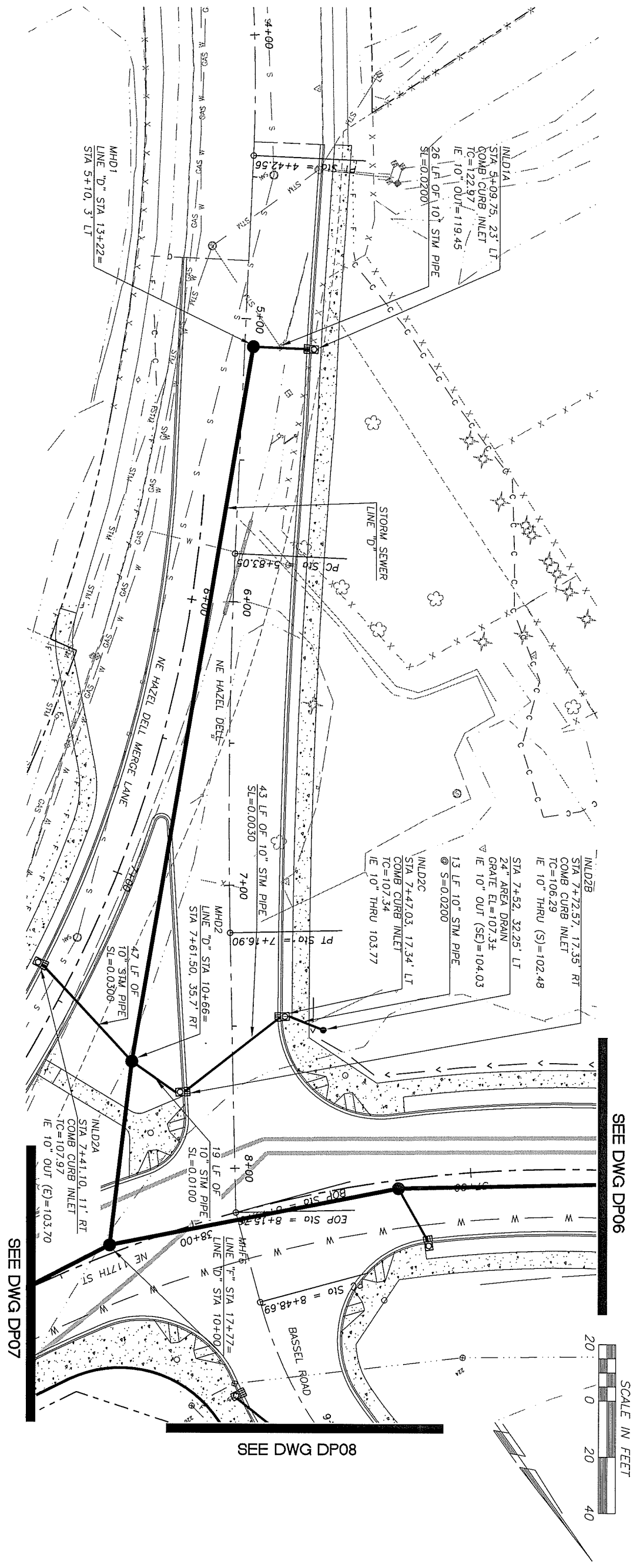

CLARK COUNTY
WASHINGTON

proud past, promising future

DESIGN & ENGINEERING DIVISION
DESIGN SECTION

NW 119TH / 117TH STREET
DRAINAGE PLAN

HAZEL DELL AVE STA 4+00 TO STA 8+50

MICHAEL M. EMRICK
STATE OF WASHINGTON
29030
REGISTERED
PROFESSIONAL ENGINEER
EXPIRES: MAY 26, 2005

CALL 48 HOURS BEFORE YOU DIG
1-800-553-4344
"It's the Law"
NORTHWEST UTILITIES NOTIFICATION CENTER

DESIGNED	MME
DRAWN	BAK
CRP	381022
HOR.	1"=20'
VERT.	1"=5'
DATE	7/14/01
DWG:	DP11
SHEET	OF

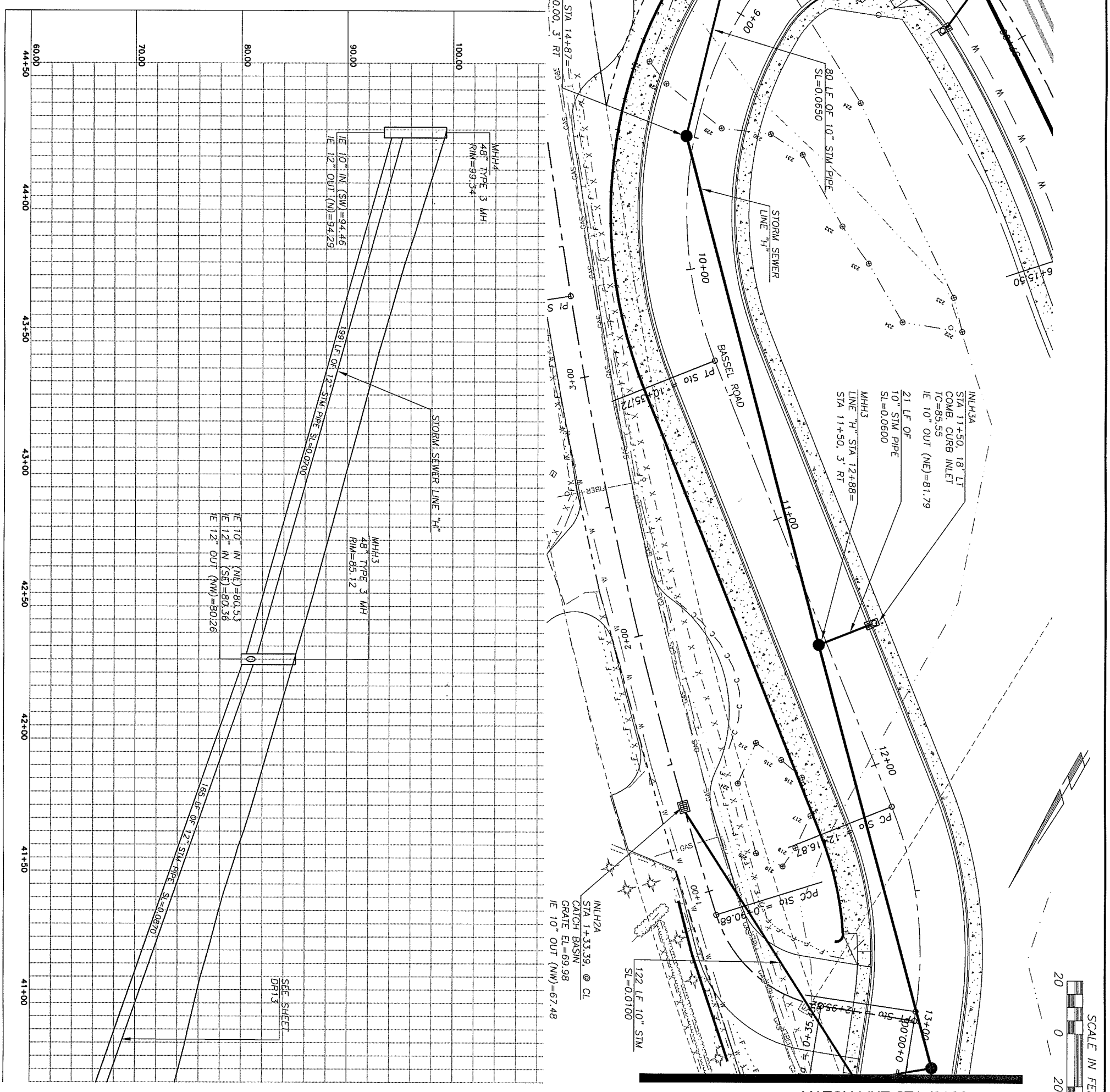

proud past, promising future

CLARK COUNTY
WASHINGTON

DESIGN & ENGINEERING DIVISION
DESIGN SECTION

NW 119TH / 117TH STREET
DRAINAGE PLAN
BASSEL ROAD STA 8+00 TO STA 13+00

MICHAEL M. ENRICK
STATE OF WASHINGTON
29030
REGISTERED
PROFESSIONAL ENGINEER
EXPIRES: MAY 26, 2005

CALL 48 HOURS BEFORE YOU DIG
1-800-553-4344
"It's the Law"
NORTHWEST UTILITIES NOTIFICATION CENTER

DESIGNED	MME
DRAWN	BAK
CRP	381022
HOR.	1"=20'
VERT.	1"=5'
DATE	7/14/01
DWG:	DP12
SHEET	OF

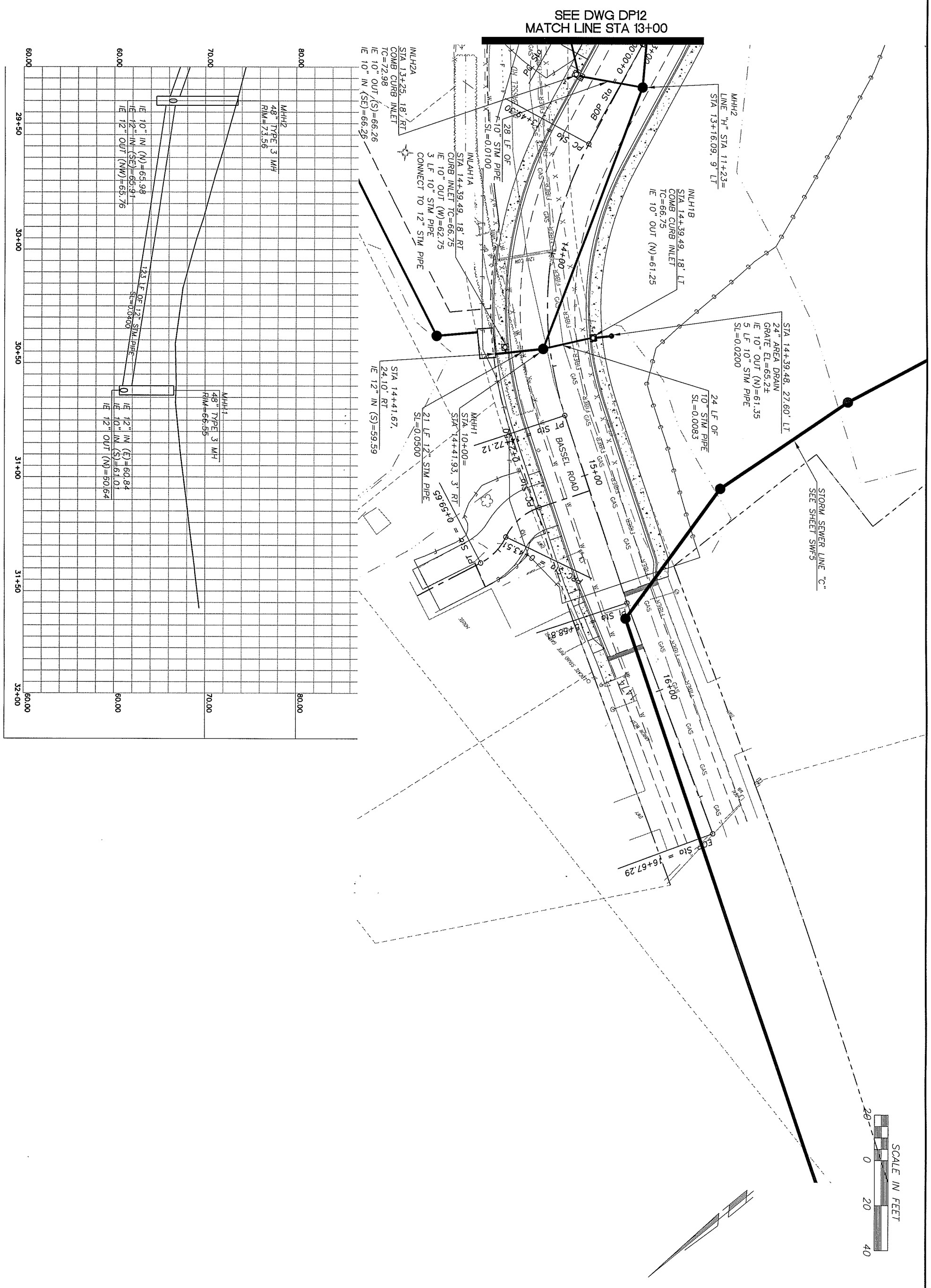

CLARK COUNTY WASHINGTON — proud past, promising future	DESIGN & ENGINEERING DIVISION DESIGN SECTION	MICHAEL M. ENRICK, STATE OF WASHINGTON, 29030, REGISTERED PROFESSIONAL ENGINEER — EXPIRES: MAY 26, 2005
	NW 119TH / 117TH STREET *DRAINAGE PLAN BASSEL ROAD* *BASSEL ROAD STA 13+00 TO E.O.P.*	CALL 48 HOURS BEFORE YOU DIG 1-800-553-4344 "It's the Law" NORTHWEST UTILITIES NOTIFICATION CENTER

DESIGNED	MME
DRAWN	BAK
CRP	381022
HOR.	1"=20'
VERT.	1"=5'
DATE	7/14/01
DWG:	DP13
SHEET	OF

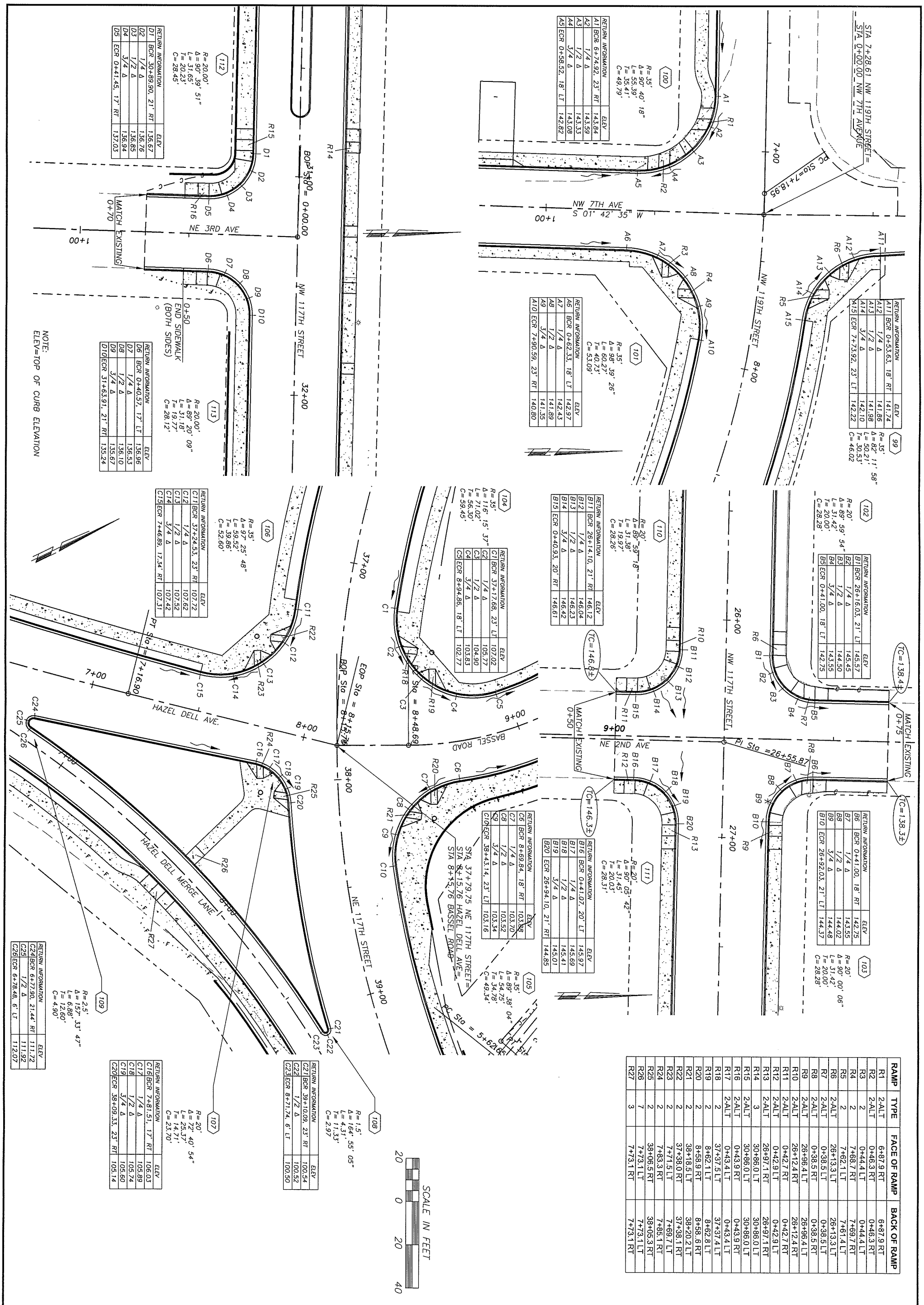

RAMP	TYPE	FACE OF RAMP	BACK OF RAMP
R1	2-ALT	6+87.9 RT	6+87.9 RT
R2	2-ALT	0+46.3 RT	0+46.3 RT
R3	2	0+44.4 LT	0+44.4 LT
R4	2	7+68.7 RT	7+69.7 RT
R5	2	7+62.1 LT	7+61.4 LT
R6	2-ALT	26+13.3 LT	26+13.3 LT
R7	2-ALT	0+38.5 LT	0+38.5 LT
R8	2-ALT	0+38.5 RT	0+38.5 RT
R9	2-ALT	26+96.4 LT	26+96.4 LT
R10	2-ALT	26+12.4 RT	26+12.4 LT
R11	2-ALT	0+42.7 RT	0+42.7 RT
R12	2-ALT	0+42.9 LT	0+42.9 LT
R13	2-ALT	26+97.1 RT	26+97.1 RT
R14	3	30+86.0 LT	30+86.0 LT
R15	2-ALT	30+86.0 LT	30+86.0 LT
R16	2-ALT	0+43.9 RT	0+43.9 RT
R17	2-ALT	0+43.4 LT	0+43.4 LT
R18	2	37+37.5 LT	37+37.4 LT
R19	2	8+62.1 LT	8+62.8 LT
R20	2	8+58.9 RT	8+58..6 RT
R21	2	38+18.5 LT	38+20.2 LT
R22	2	37+38.0 RT	37+38.1 RT
R23	2	7+71.5 LT	7+69.7 LT
R24	2	7+83.3 RT	7+85.1 RT
R25	2	38+06.5 RT	38+05.3 RT
R26	7	7+73.1 LT	7+73.1 LT
R27	3	7+73.1 RT	7+73.1 RT

proud past, promising future

CLARK COUNTY
WASHINGTON

DESIGN & ENGINEERING DIVISION
DESIGN SECTION

NW 119TH / 117TH STREET
INTERSECTION PLAN

MICHAEL M. EMRICK
STATE OF WASHINGTON
29030
REGISTERED
PROFESSIONAL ENGINEER
EXPIRES: MAY 26, 2005

CALL 48 HOURS BEFORE YOU DIG
1-800-553-4344
"It's the Law"
NORTHWEST UTILITIES NOTIFICATION CENTER

DESIGNED	MME
DRAWN	KMB
CRP	381022
HOR.	1"=20'
VERT.	NA
DATE	10/21/01
DWG:	101
SHEET	OF

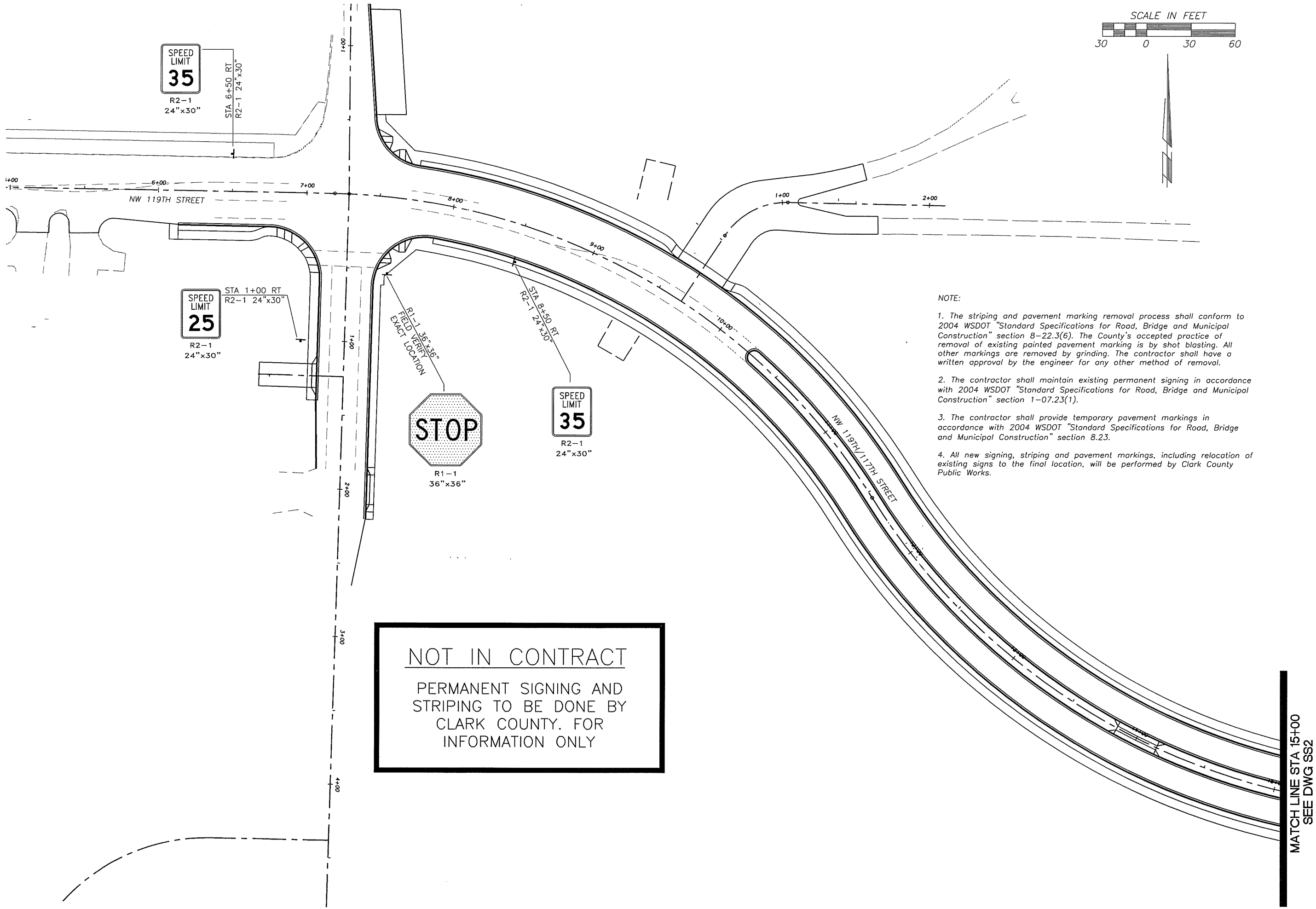

NOTE:

1. The striping and pavement marking removal process shall conform to 2004 WSDOT "Standard Specifications for Road, Bridge and Municipal Construction" section 8-22.3(6). The County's accepted practice of removal of existing painted pavement marking is by shot blasting. All other markings are removed by grinding. The contractor shall have a written approval by the engineer for any other method of removal.

2. The contractor shall maintain existing permanent signing in accordance with 2004 WSDOT "Standard Specifications for Road, Bridge and Municipal Construction" section 1-07.23(1).

3. The contractor shall provide temporary pavement markings in accordance with 2004 WSDOT "Standard Specifications for Road, Bridge and Municipal Construction" section 8.23.

4. All new signing, striping and pavement markings, including relocation of existing signs to the final location, will be performed by Clark County Public Works.

NOT IN CONTRACT

PERMANENT SIGNING AND STRIPING TO BE DONE BY CLARK COUNTY. FOR INFORMATION ONLY

DESIGNED MME
DRAWN KMB
CRP 381022
HOR. 1"=30'
VERT. NA
DATE 7/14/02
DWG: STR1
SHEET OF

CALL 48 HOURS BEFORE YOU DIG
1-800-553-4344
"It's the Law"
NORTHWEST UTILITIES NOTIFICATION CENTER

EUGENE S. BERRETH
STATE OF WASHINGTON
18227
REGISTERED PROFESSIONAL ENGINEER
EXPIRES AUG 17, 2005

DESIGN & ENGINEERING DIVISION
DESIGN SECTION

119TH/117TH STREET
SIGNING & STRIPING PLAN

proud past, promising future
CLARK COUNTY
WASHINGTON

N:\CIP\PROJECTS\381022-NW117-119\DESIGN\DWGS\119STR1-3.dwg, Layout1, 10/7/2004 11:21:43 AM, begleyk

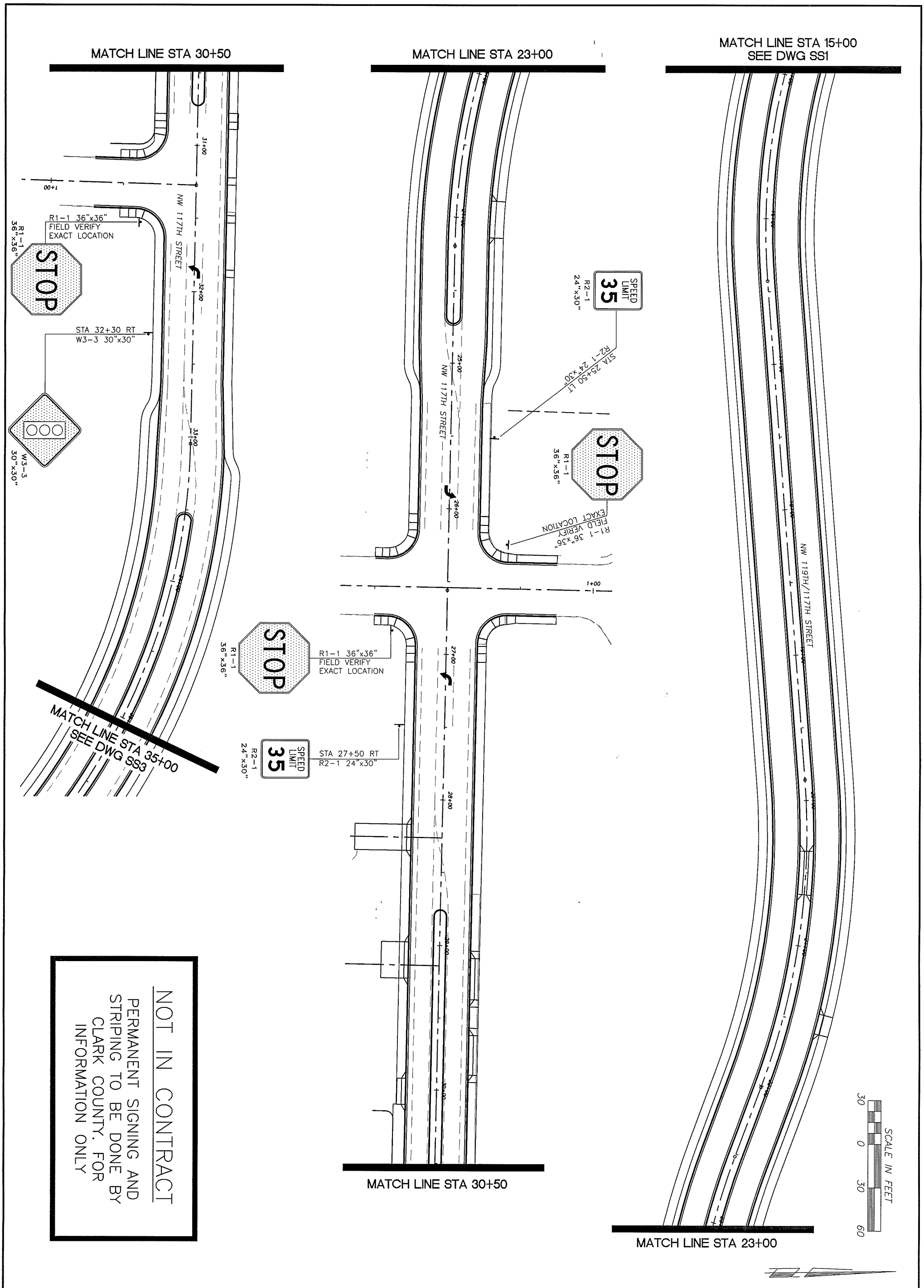

NOT IN CONTRACT

PERMANENT SIGNING AND STRIPING TO BE DONE BY CLARK COUNTY. FOR INFORMATION ONLY

proud past, promising future

CLARK COUNTY
WASHINGTON

DESIGN & ENGINEERING DIVISION
DESIGN SECTION

119TH/117TH STREET
SIGNING & STRIPING PLAN

EUGENE S. BEGREETH
STATE OF WASHINGTON
18227
REGISTERED
PROFESSIONAL ENGINEER
EXPIRES: AUG 17, 2005

CALL 48 HOURS BEFORE YOU DIG
1-800-553-4344
"It's the Law"
NORTHWEST UTILITIES NOTIFICATION CENTER

DESIGNED	MME
DRAWN	KMB
CRP	381022
HOR.	1"=30'
VERT.	NA
DATE	7/14/02
DWG:	STR2
SHEET	OF

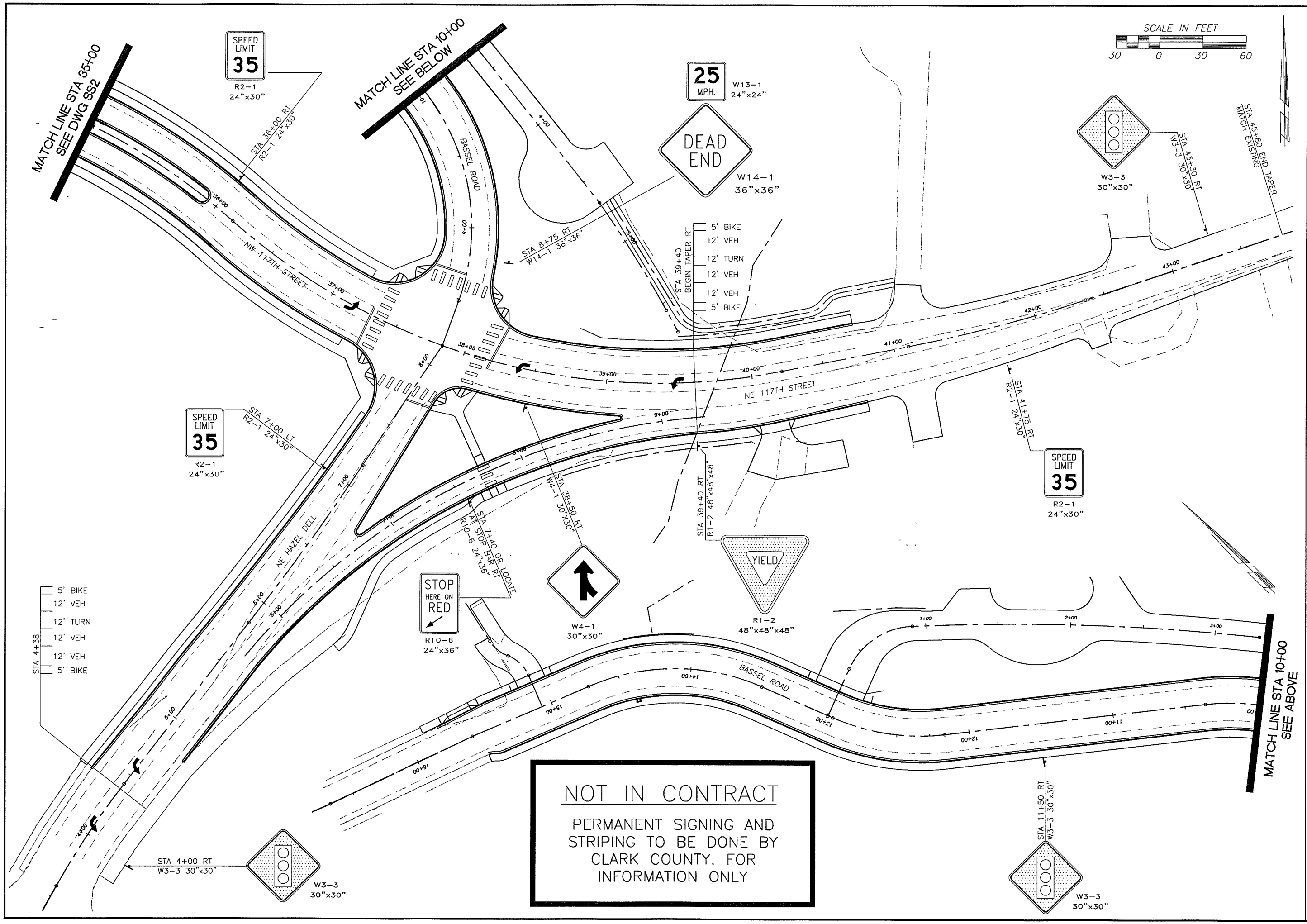

NOT IN CONTRACT

PERMANENT SIGNING AND STRIPING TO BE DONE BY CLARK COUNTY. FOR INFORMATION ONLY

DESIGN & ENGINEERING DIVISION
DESIGN SECTION

119TH/117TH STREET
SIGNING & STRIPING PLAN

DESIGNED	MME
DRAWN	KMB
CRP	381022
HOR.	1"=30'
VERT.	NA
DATE	7/14/02
DWG:	STR3
SHEET	OF

CALL 48 HOURS BEFORE YOU DIG
1-800-553-4344
"It's the Law"
NORTHWEST UTILITIES NOTIFICATION CENTER

EUGENE S. BERRETH
STATE OF WASHINGTON
18227
REGISTERED PROFESSIONAL ENGINEER
EXPIRES AUG 17, 2005

proud past, promising future
CLARK COUNTY WASHINGTON

N:\CIP\PROJECTS\381022-NW117-119\DESIGN\DWGS\119STR1-3.dwg, Layout1 (3), 10/7/2004 11:39:45 AM, begleyk

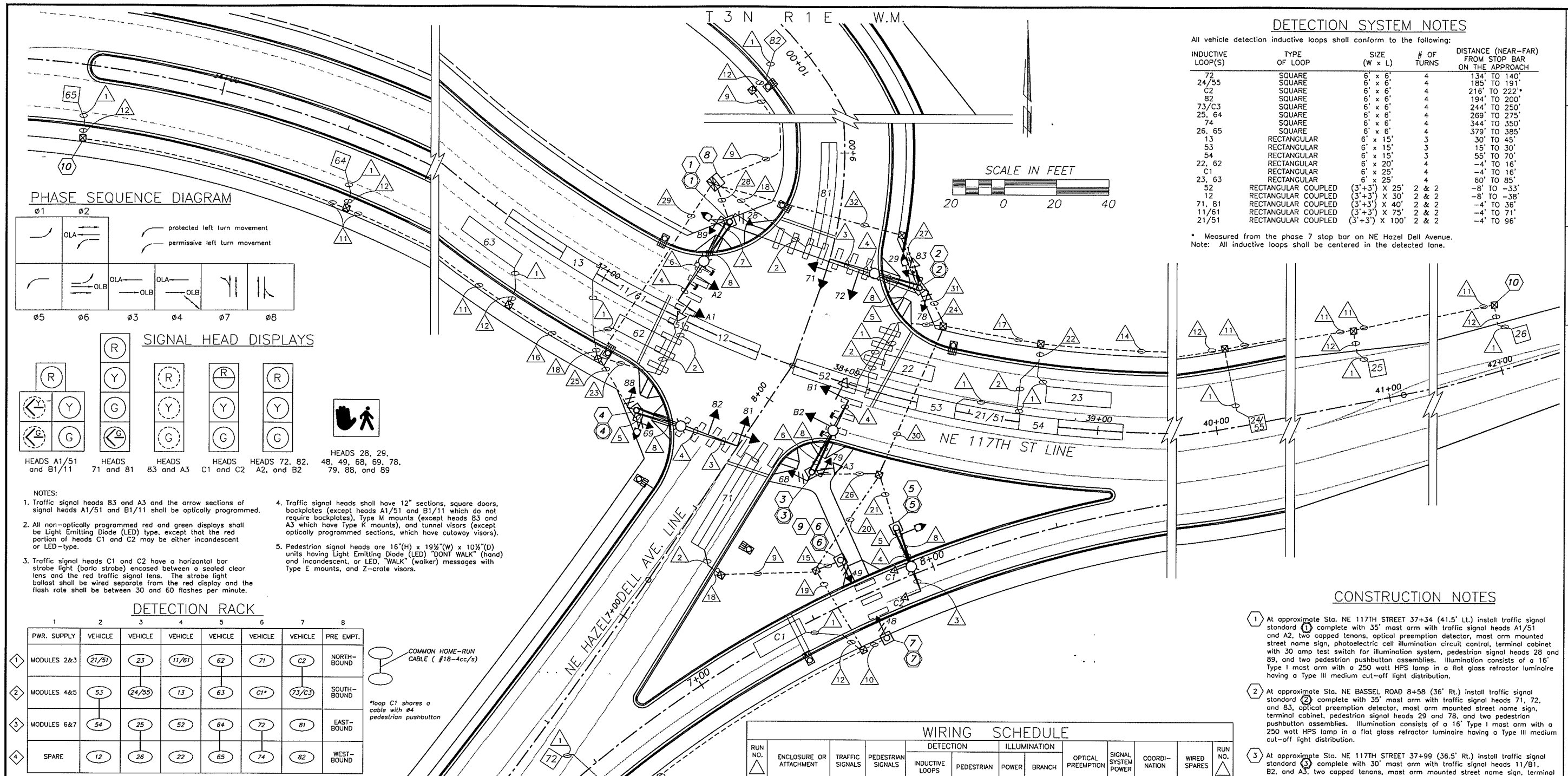

NOTES:

1. Traffic signal heads 83 and A3 and the arrow sections of signal heads A1/51 and B1/11 shall be optically programmed.
2. All non-optically programmed red and green displays shall be Light Emitting Diode (LED) type, except that the red portion of heads C1 and C2 may be either incandescent or LED-type.
3. Traffic signal heads C1 and C2 have a horizontal bar strobe light (barlo strobe) encased between a sealed clear lens and the red traffic signal lens. The strobe light ballast shall be wired separate from the red display and the flash rate shall be between 30 and 60 flashes per minute.
4. Traffic signal heads shall have 12" sections, square doors, backplates (except heads A1/51 and B1/11 which do not require backplates), Type M mounts (except heads 83 and A3 which have Type K mounts), and tunnel visors (except optically programmed sections, which have cutaway visors).
5. Pedestrian signal heads are 16"(H) x 19½"(W) x 10½"(D) units having Light Emitting Diode (LED) "DONT WALK" (hand) and incandescent, or LED, "WALK" (walker) messages with Type E mounts, and Z-crate visors.

DETECTION RACK

	1	2	3	4	5	6	7	8
	PWR. SUPPLY	VEHICLE	VEHICLE	VEHICLE	VEHICLE	VEHICLE	VEHICLE	PRE EMPT.
1	MODULES 2&3	21/51	23	11/61	62	71	C2	NORTH-BOUND
2	MODULES 4&5	53	24/55	13	63	C1*	73/C3	SOUTH-BOUND
3	MODULES 6&7	54	25	52	64	72	81	EAST-BOUND
4	SPARE	12	26	22	65	74	82	WEST-BOUND

COMMON HOME-RUN CABLE (#18-4cc/s)

*loop C1 shares a cable with #4 pedestrian pushbutton

LEGEND

- Type III signal standard with terminal cabinet
- Pedestrian signal standard
- PUD Pedestal
- P-1 controller cabinet with Type I electrical service
- Type I electrical junction box
- optically programmed traffic signal display sections
- conventional traffic signal display with barlo strobe red
- conventional traffic signal display sections
- pedestrian signal display
- optical preemption detector
- capped tenon
- existing right-of-way
- rigid metal conduit
- rigid polyvinyl chloride (PVC) conduit
- signal standard number
- construction note
- wire note

DETECTION SYSTEM NOTES

All vehicle detection inductive loops shall conform to the following:

INDUCTIVE LOOP(S)	TYPE OF LOOP	SIZE (W x L)	# OF TURNS	DISTANCE (NEAR-FAR) FROM STOP BAR ON THE APPROACH
72	SQUARE	6' x 6'	4	134' TO 140'
24/55	SQUARE	6' x 6'	4	185' TO 191'
C2	SQUARE	6' x 6'	4	216' TO 222'*
82	SQUARE	6' x 6'	4	194' TO 200'
73/C3	SQUARE	6' x 6'	4	244' TO 250'
25, 64	SQUARE	6' x 6'	4	269' TO 275'
74	SQUARE	6' x 6'	4	344' TO 350'
26, 65	SQUARE	6' x 6'	4	379' TO 385'
13	RECTANGULAR	6' x 15'	3	30' TO 45'
53	RECTANGULAR	6' x 15'	3	15' TO 30'
54	RECTANGULAR	6' x 15'	3	55' TO 70'
22, 62	RECTANGULAR	6' x 20'	4	-4' TO 16'
C1	RECTANGULAR	6' x 25'	4	-4' TO 16'
23, 63	RECTANGULAR	6' x 25'	4	60' TO 85'
52	RECTANGULAR COUPLED	(3'+3') X 25'	2 & 2	-8' TO -33'
12	RECTANGULAR COUPLED	(3'+3') X 30'	2 & 2	-8' TO -38'
71, 81	RECTANGULAR COUPLED	(3'+3') X 40'	2 & 2	-4' TO 36'
11/61	RECTANGULAR COUPLED	(3'+3') X 75'	2 & 2	-4' TO 71'
21/51	RECTANGULAR COUPLED	(3'+3') X 100'	2 & 2	-4' TO 96'

* Measured from the phase 7 stop bar on NE Hazel Dell Avenue.
Note: All inductive loops shall be centered in the detected lane.

WIRING SCHEDULE

RUN NO. △	ENCLOSURE OR ATTACHMENT	TRAFFIC SIGNALS	PEDESTRIAN SIGNALS	DETECTION: INDUCTIVE LOOPS	DETECTION: PEDESTRIAN	ILLUMINATION: POWER	ILLUMINATION: BRANCH	OPTICAL PREEMPTION	SIGNAL SYSTEM POWER	COORDI-NATION	WIRED SPARES	RUN NO. △
1	SAW-CUT			2#12 TP								1
2	SAW-CUT			4#12 TP								2
3	SIGNAL MAST ARM	1-5/cc										3
4	SIGNAL MAST ARM	2-5/cc										4
5	SIGNAL MAST ARM	2-5/cc						1#20-3cc/s				5
6	SIGNAL MAST ARM	3-5/cc										6
7	SIGNAL MAST ARM	3-5/cc						1#20-3cc/s				7
8	ILLUM. MAST ARM						2#10 PB					8
9	1" PVC			1#18-4cc/s								9
10	1-1/2" RM		1-5/cc		1#18-4cc/s							10
11	2" PVC			1#18-4cc/s						1#18-4cc/s		11
12	1" PVC			2#12 TP								12
13	1-1/2" RM								2#4			13
14	2" PVC			2#18-4cc/s						1#18-4cc/s		14
15	1-1/2" RM		2-5/cc		2#18-4cc/s							15
16	2" PVC			2#12 TP & 1#18-4cc/s						1#18-4cc/s		16
17	2" PVC			3#18-4cc/s						1#18-4cc/s		17
18	1" PVC			4#12 TP								18
19	1-1/2" RM		1-5/cc	2#18-4cc/s	1#18-4cc/s					1#18-4cc/s		19
20	1-1/2" RM		1-5/cc	3#18-4cc/s	1#18-4cc/s					1#18-4cc/s		20
21	1-1/2" RM	1-5/cc					2#12	1#20-3cc/s			2#12	21
22	1" PVC			6#12 TP								22
23	1" PVC			8#12 TP								23
24	1-1/4" PVC			10#12 TP								24
25	2" RM	1-5/cc	1-5/cc		1#18-4cc/s		2#12	1#20-3cc/s			2#12	25
26	2" RM	3-5/cc	1-5/cc		1#18-4cc/s		2#12				2#12	26
27	2" RM	2-5/cc	1-5/cc		1#18-4cc/s		2#12	1#20-3cc/s			2#12	27
28	2" RM	2-5/cc	1-5/cc		1#18-4cc/s	2#10	1#12	1#20-3cc/s			2#12	28
29	2" RM	1-5/cc	1-5/cc	7#18-4cc/s	1#18-4cc/s		2#12	1#20-3cc/s		1#18-4cc/s	2#12	29
30	3" RM	4-5/cc	2-5/cc	3#18-4cc/s	1#18-4cc/s 1#18-4cc/s		4#12	1#20-3cc/s		1#18-4cc/s	4#12	30
31	3" RM	4-5/cc	2-5/cc	9#18-4cc/s	1#18-4cc/s 1#18-4cc/s		4#12	1#20-3cc/s		2#18-4cc/s	4#12	31
32	3" RM	6-5/cc	3-5/cc	9#18-4cc/s	2#18-4cc/s 1#18-4cc/s		6#12	2#20-3cc/s		2#18-4cc/s	6#12	32

WIRING SCHEDULE LEGEND:

PB = Pole and Bracket cable
TP = Twisted Pair(s) of #12 AWG Type USE inductive loop wires
RM = Rigid Metal conduit
PVC = Rigid Polyvinyl Chloride (plastic) conduit
5/cc = Five-conductor traffic signal display cable
4cc/s = multi-conducor communication cable having stranded copper conductors, aluminum/polyester foil shield, and high-density polyethylene jacket aluminum/polyester foil shield, and high-density polyethylene jacket

CONSTRUCTION NOTES

1. At approximate Sta. NE 117TH STREET 37+34 (41.5' Lt.) install traffic signal standard (1) complete with 35' mast arm with traffic signal heads A1/51 and A2, two capped tenons, optical preemption detector, mast arm mounted street name sign, photoelectric cell illumination circuit control, terminal cabinet with 30 amp test switch for illumination system, pedestrian signal heads 28 and 89, and two pedestrian pushbutton assemblies. Illumination consists of a 16' Type I mast arm with a 250 watt HPS lamp in a flat glass refractor luminaire having a Type III medium cut-off light distribution.
2. At approximate Sta. NE BASSEL ROAD 8+58 (36' Rt.) install traffic signal standard (2) complete with 35' mast arm with traffic signal heads 71, 72, and 83, optical preemption detector, mast arm mounted street name sign, terminal cabinet, pedestrian signal heads 29 and 78, and two pedestrian pushbutton assemblies. Illumination consists of a 16' Type I mast arm with a 250 watt HPS lamp in a flat glass refractor luminaire having a Type III medium cut-off light distribution.
3. At approximate Sta. NE 117TH STREET 37+99 (36.5' Rt.) install traffic signal standard (3) complete with 30' mast arm with traffic signal heads 11/81, B2, and A3, two capped tenons, mast arm mounted street name sign, terminal cabinet, pedestrian signal heads 68 and 79, and two pedestrian pushbutton assemblies. Illumination consists of a 16' Type I mast arm with a 250 watt HPS lamp in a flat glass refractor luminaire having a Type III medium cut-off light distribution.
4. At approximate Sta. NE HAZEL DELL AVENUE 7+68 (40' Lt.) install traffic signal standard (4) complete with 40' mast arm with traffic signal heads 81 and 82, optical preemption detector, mast arm mounted street name sign, terminal cabinet, pedestrian signal heads 69 and 88, and two pedestrian pushbutton assemblies. Illumination consists of a 16' Type I mast arm with a 250 watt HPS lamp in a flat glass refractor luminaire having a Type III medium cut-off light distribution.
5. At approximate Sta. NE HAZEL DELL AVENUE-EAST 7+92 (19' Lt.) install traffic signal standard (5) complete with 25' mast arm with traffic signal heads C1 and C2, pedestrian crossing sign, optical preemption detector, and terminal cabinet. Illumination consists of a 14' Type I mast arm with a 250 watt HPS lamp in a flat glass refractor luminaire having a Type III medium cut-off light distribution.
6. At approximate Sta. NE HAZEL DELL AVENUE-EAST 7+69 (16' Lt.) install pedestrian signal standard (6) complete with pedestrian signal head 49 and one pedestrian pushbutton assembly.
7. At approximate Sta. NE HAZEL DELL AVENUE-EAST 7+72 (18.5' Rt.) install pedestrian signal standard (7) complete with pedestrian signal head 48 and one pedestrian pushbutton assembly.
8. At approximate Sta. NE 117TH STREET 37+20 (53' Lt.) install P-1 controller cabinet (with attached modified Type A electrical service, see special provisions) on modified M-pad foundation as per the standard plans, standard specifications, and the special provisions. The door for this cabinet shall open to the northeast, the pedestal height shall be 17.5 inches, and the footing pad in front of the cabinet shall extend three (3) feet beyond the pedestal.
9. Connect inductive loop C1 to RED/GREEN wires and pedestrian pushbuttons 48 and 49 to BLACK/WHITE wires of #18-4cc/s cable.
10. Install epoxy splice (cap) on the end of the traffic signal interconnect cable that is terminated in this junction box.

DESIGNED	EB
DRAWN	KB
CRP	382722
HOR.	1"=20'
VERT.	NA
DATE	7/14/01
DWG:	S01
SHEET X	OF X

CALL 48 HOURS BEFORE YOU DIG 1-800-553-4344 "It's the Law" NORTHWEST UTILITIES NOTIFICATION CENTER

EUGENE S. BIRCH STATE OF WASHINGTON 17327 REGISTERED PROFESSIONAL ENGINEER
EXPIRES AUG. 17, 2005

DESIGN & ENGINEERING DIVISION
DESIGN SECTION

NE 117TH STREET @ HAZEL DELL AVENUE
SIGNAL PLAN

CLARK COUNTY WASHINGTON
proud past, promising future

N:\CIP\PROJECTS\381022-NW117-119\DESIGN\SIGNALS\S01bs.dwg, Layout1, 10/7/2004 11:52:40 AM, begleyk

N:\CIP\PROJECTS\381022-NW117-119\DESIGN\SIGNAL\S02.dwg, Layout1, 10/5/2004 9:40:20 AM, begleyk

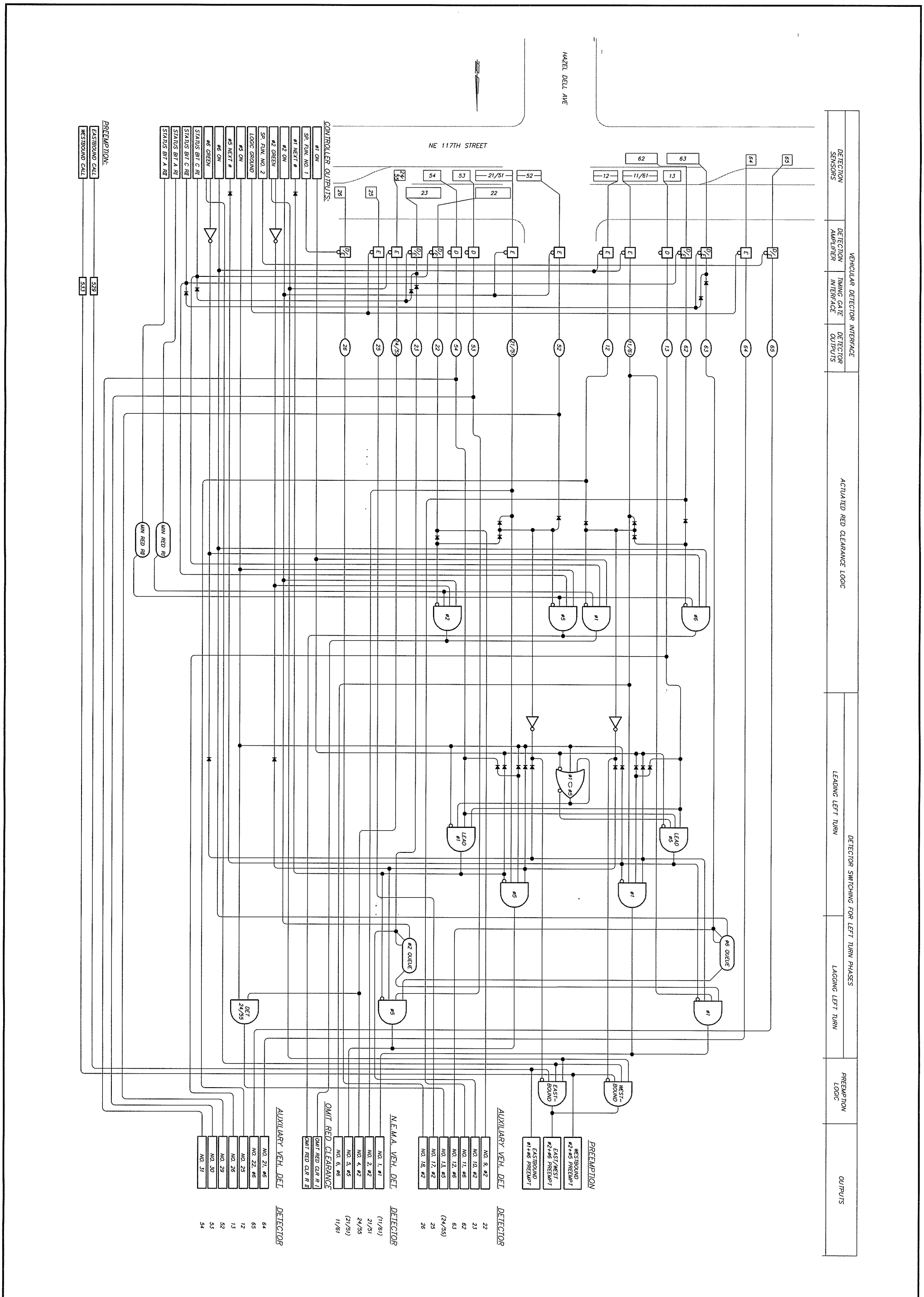

proud past, promising future

CLARK COUNTY
WASHINGTON

DESIGN & ENGINEERING DIVISION
DESIGN SECTION

NE 117TH STREET @ HAZEL DELL AVE
DETECTION LOGIC SCHEMATIC-E/W

EUGENE S. BERRETH
STATE OF WASHINGTON
18227
REGISTERED
PROFESSIONAL ENGINEER
EXPIRES: AUG 17, 2005

CALL 48 HOURS BEFORE YOU DIG
1-800-553-4344
"It's the Law"
NORTHWEST UTILITIES NOTIFICATION CENTER

DESIGNED	EB
DRAWN	KB
CRP	382722
HOR.	NA
VERT.	NA
DATE	7/14/01
DWG:	S02
SHEET	OF

N:\CIP\PROJECTS\381022-NW117-119\DESIGN\SIGNAL\S03.dwg, Layout1, 10/5/2004 9:40:43 AM, begleyk

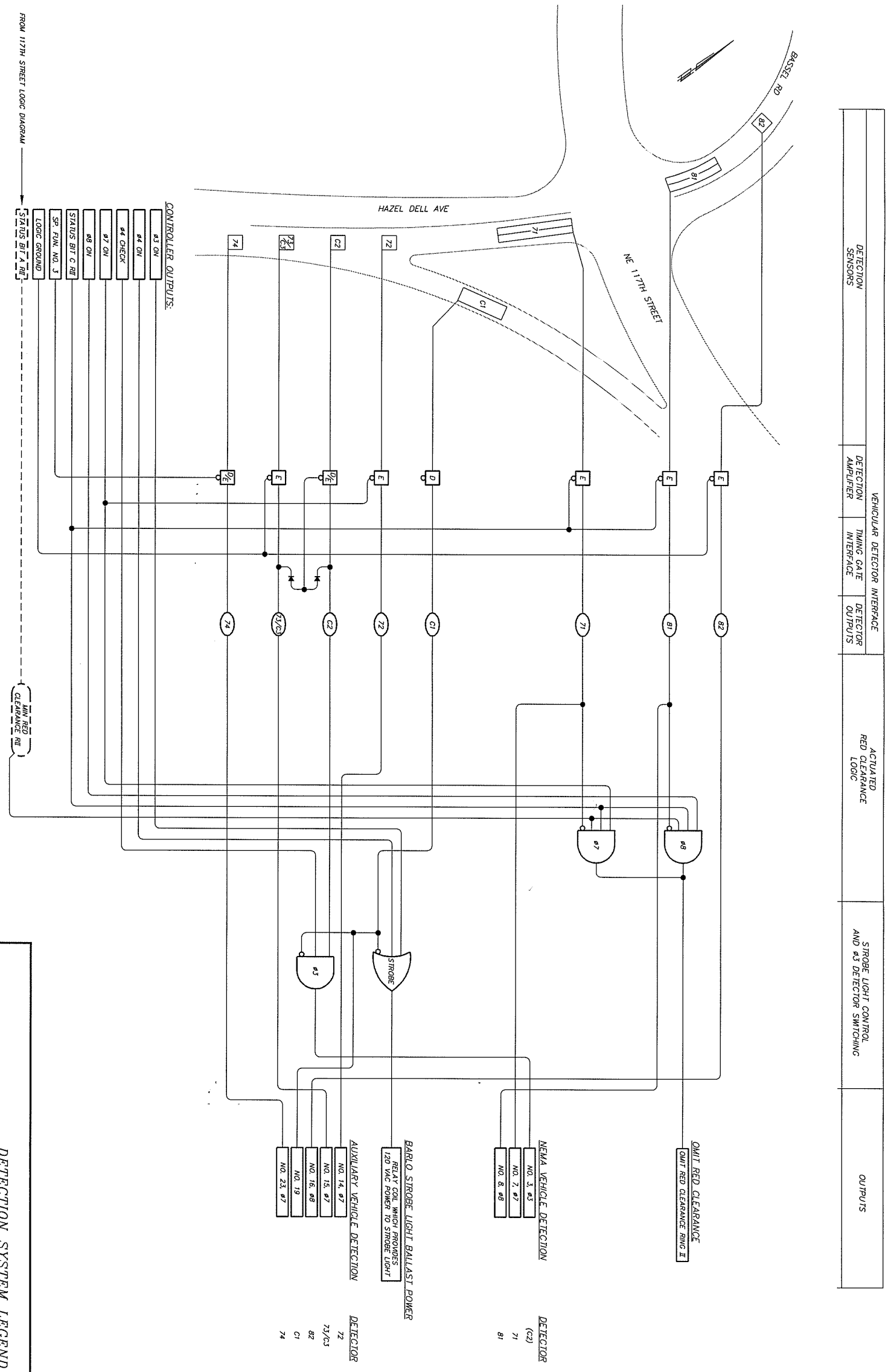

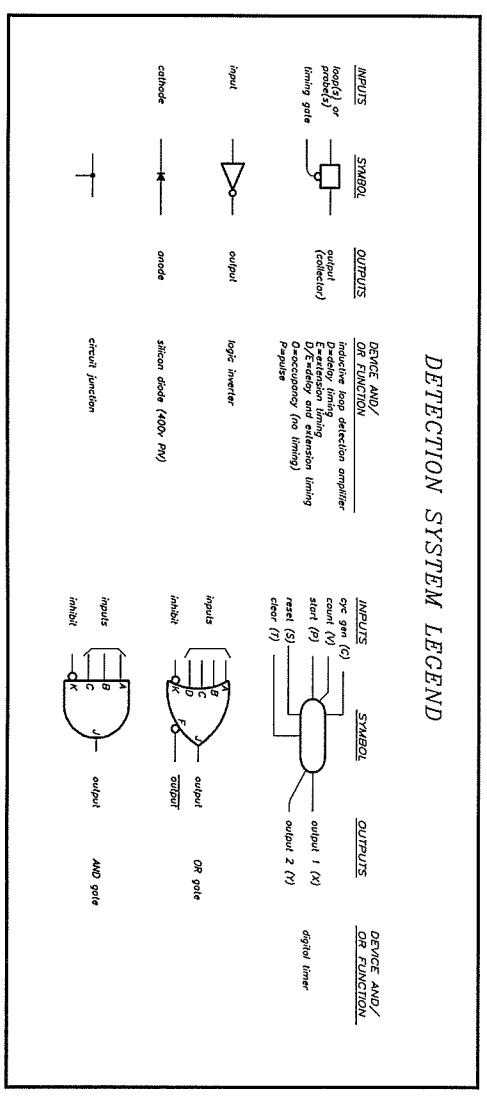

proud past, promising future

CLARK COUNTY WASHINGTON

DESIGN & ENGINEERING DIVISION
DESIGN SECTION

NE 117TH STREET @ HAZEL DELL AVE
DETECTION LOGIC SCHEMATIC N/S

EUGENE S. BERRETH, STATE OF WASHINGTON, 18227, REGISTERED PROFESSIONAL ENGINEER
EXPIRES: AUG 17, 2005

CALL 48 HOURS BEFORE YOU DIG
1-800-553-4344
"It's the Low"
NORTHWEST UTILITIES NOTIFICATION CENTER

DESIGNED	EB
DRAWN	KB
CRP	382722
HOR.	NA
VERT.	NA
DATE	7/14/01
DWG:	S03
SHEET	OF

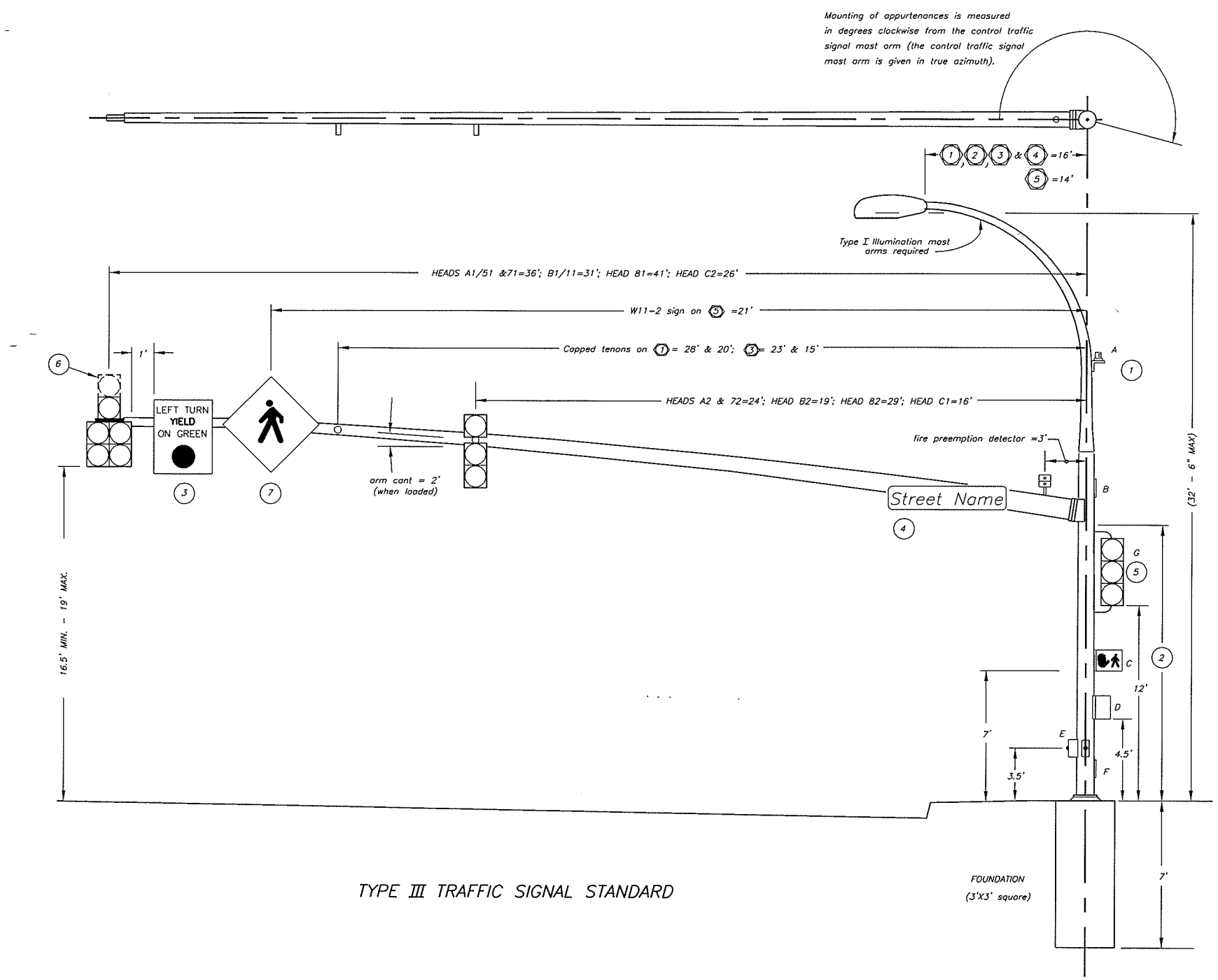

TYPE III TRAFFIC SIGNAL STANDARD

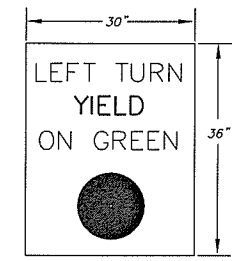

3 R10-12

TRAFFIC SIGNAL SIGN DETAIL

Note: Reflective surface shall be 3M Diamond Grade VIP or approved equal

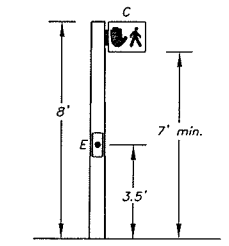

TYPE PS (PEDESTRIAN SIGNAL) POLES 6 & 7

(USE TYPE E CLAMSHELL MOUNTS, WSDOT STD PLAN J-6f)

APPURTENANCE ORIENTATION					
SIGNAL STANDARD	1	2	3	4	5
SIGNAL MAST ARM	212° T.A.	286° T.A.	30° T.A.	109° T.A.	157° T.A.
A	0°	0°	0°	0°	0°
B	180°	180°	180°	180°	180°
C	82° /165°	94° /192°	90° /168°	90° /185°	N/A
D	127°	138°	122°	135°	180°
E	255°/353°	3°/283°	0°/258°	0°/276°	N/A
F	180°	180°	180°	180°	180°
G	N/A	103°	78°	N/A	N/A

T.A.=True Azimuth
A=Illumination mast arm
B=Handhole
C=Pedestrian Signal Heads
D=Terminal Cabinet of Controller Cabinet
E=Pedestrian Pushbuttons with Signs
F=Handhole
G=Traffic Signal Head

NOTES:

1. Photoelectric cell illumination circuit control (Signal standard 1 only).
2. Mast arm attachment varies with manufacturer.
3. Left turn yield on green • on signal standards 1 & 3 only
4. Street name signs attached per standard plan J-6h. Street name signs are 18" or 36" high and have 8" u.c./6" l.c. series "C" black letters on a diamond grade reflectorized yellow background. Signs shall include borders, margins, and corner radii. Legends are as follows:

   1 { ← NE Hazel Dell Av. / NE Bassel Rd. → } 36"

   3 { ← NE Bassel Rd. / NE Hazel Dell Av.→ } 36"

   2 & 4 = [NE 117th St.] 18"

5. Side-mounted traffic signal head attached per standard plan J-6f
6. Locate elevator plumbizer between yellow and green section on heads 71 and 81 only.
7. Pedestrian crossing signs shall be 48"x48" stron fluorescent yellow green with a reflective surface of 3M Diamond Grade VIP or approved equal.

DESIGNED	EB
DRAWN	KB
CRP	382722
HOR.	1"=20'
VERT.	NA
DATE	7/14/01
DWG:	S04
SHEET X	OF X

CALL 48 HOURS BEFORE YOU DIG 1-800-553-4344 "It's the Law" NORTHWEST UTILITIES NOTIFICATION CENTER

STATE OF WASHINGTON EUGENE BIRSCH 18827 REGISTERED PROFESSIONAL ENGINEER
EXPIRES: AUG. 17, 2005

DESIGN & ENGINEERING DIVISION
DESIGN SECTION

NE 117TH STREET at HAZEL DELL AVENUE
STANDARD POLE DETAIL

proud past, promising future
CLARK COUNTY WASHINGTON

N:\CIP\PROJECTS\381022-NW117-119\DESIGN\SIGNAL\S04.dwg, Layout1, 10/5/2004 9:41:21 AM, begleyk

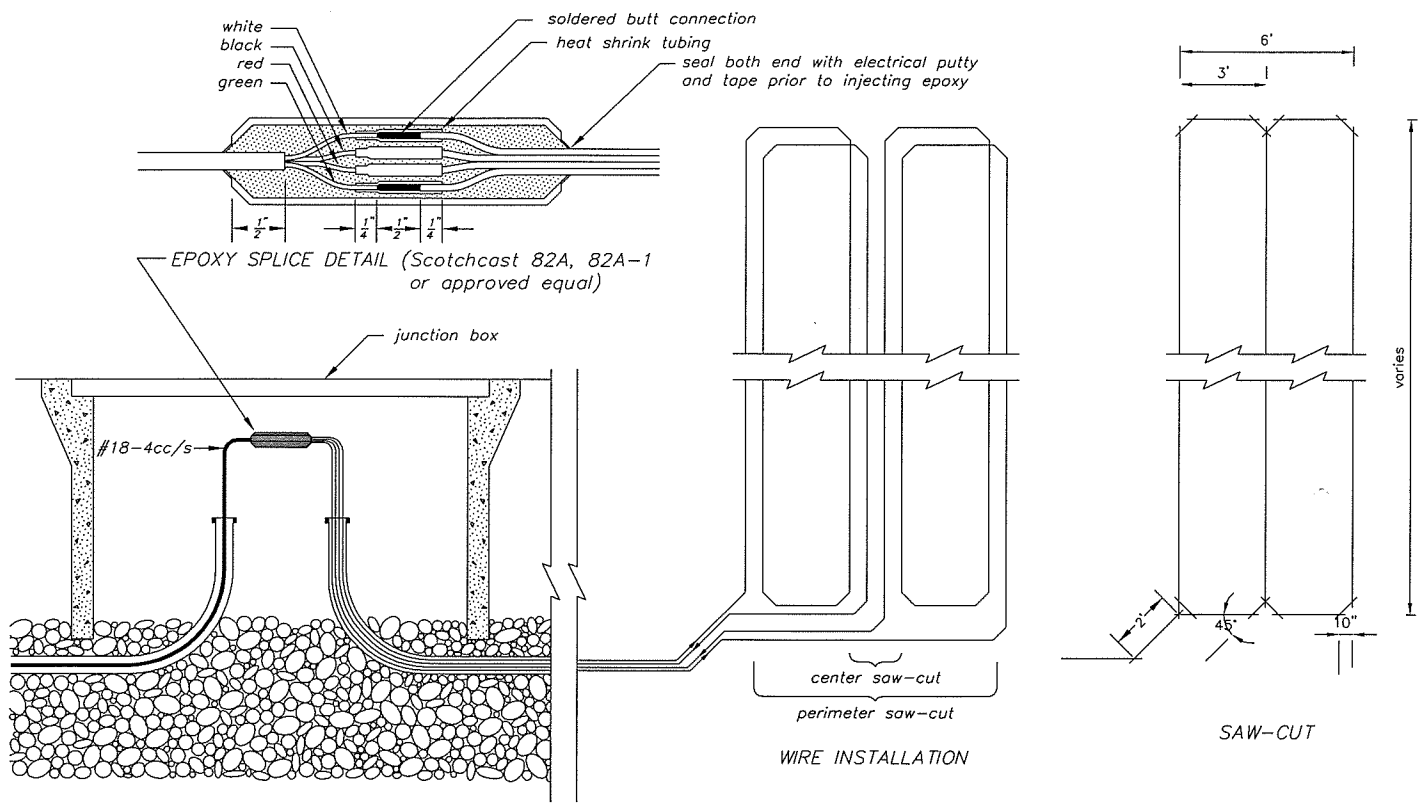

COUPLED LOOPS DETAIL

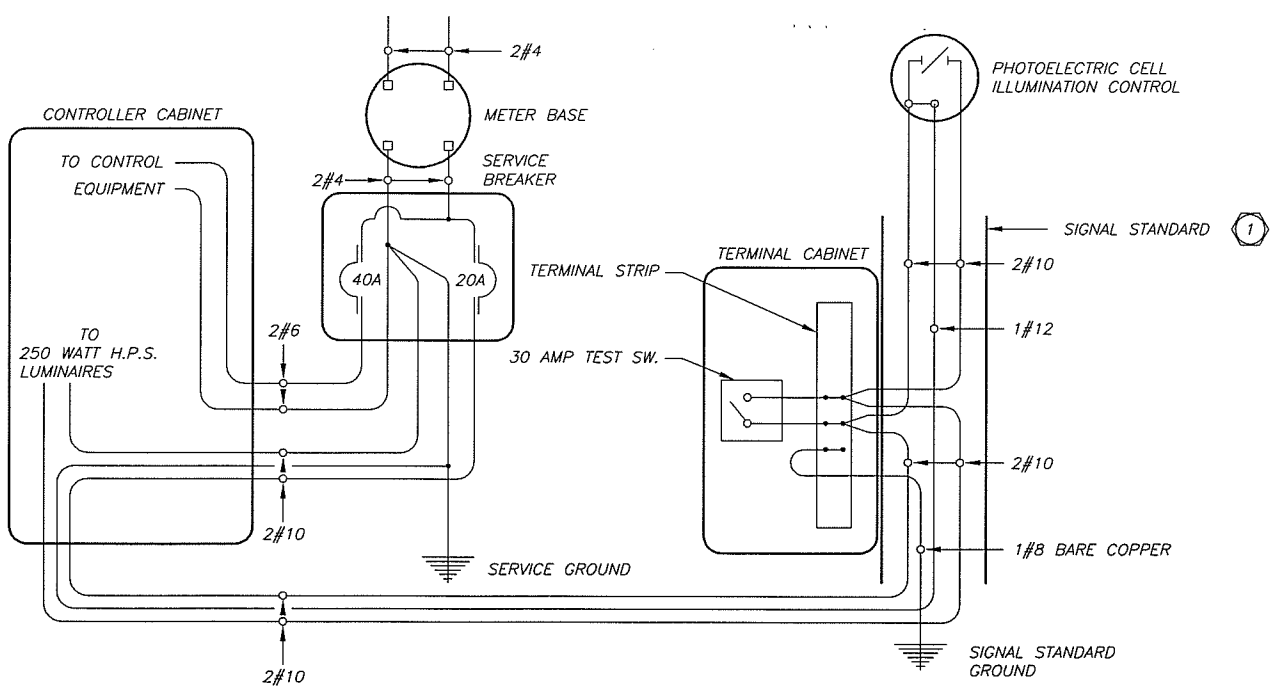

ELECTRICAL SERVICE DETAILS

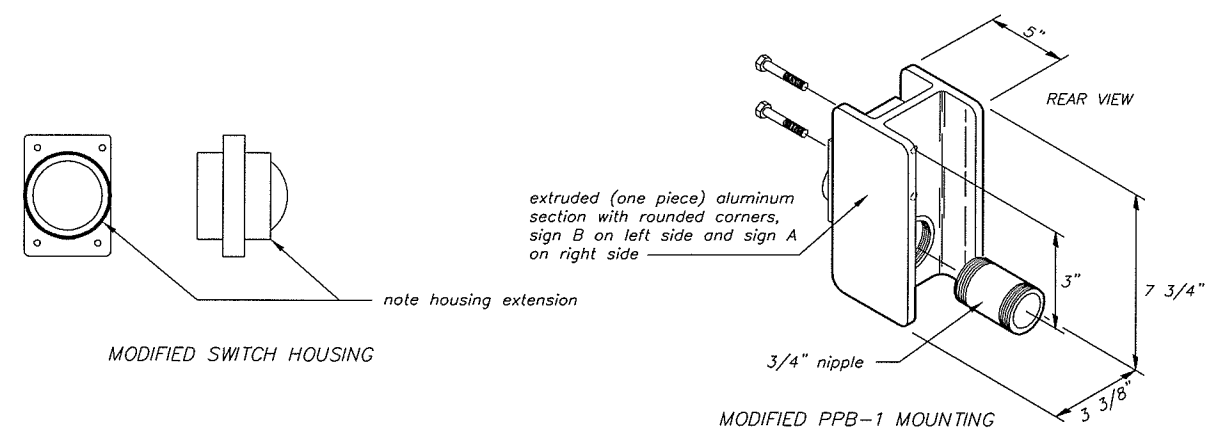

PEDESTRIAN PUSHBUTTON DETAIL

DESIGNED	EB
DRAWN	KB
CRP	381022
HOR.	NA
VERT.	NA
DATE	7/14/01
DWG:	S05
SHEET X	OF X

CALL 48 HOURS BEFORE YOU DIG 1-800-553-4344 "It's the Law" NORTHWEST UTILITIES NOTIFICATION CENTER

EUGENE S. BEGRETH STATE OF WASHINGTON 18227 REGISTERED PROFESSIONAL ENGINEER EXPIRES AUG. 17, 2005

DESIGN & ENGINEERING DIVISION
DESIGN SECTION

NE 117TH STREET @ HAZEL DELL AVENUE
SYSTEM DETAILS

proud past, promising future
CLARK COUNTY WASHINGTON

N:\CIP\PROJECTS\381022-NW117-119\DESIGN\SIGNALS\S05.dwg, Layout1, 10/5/2004 9:41:44 AM, begleyk

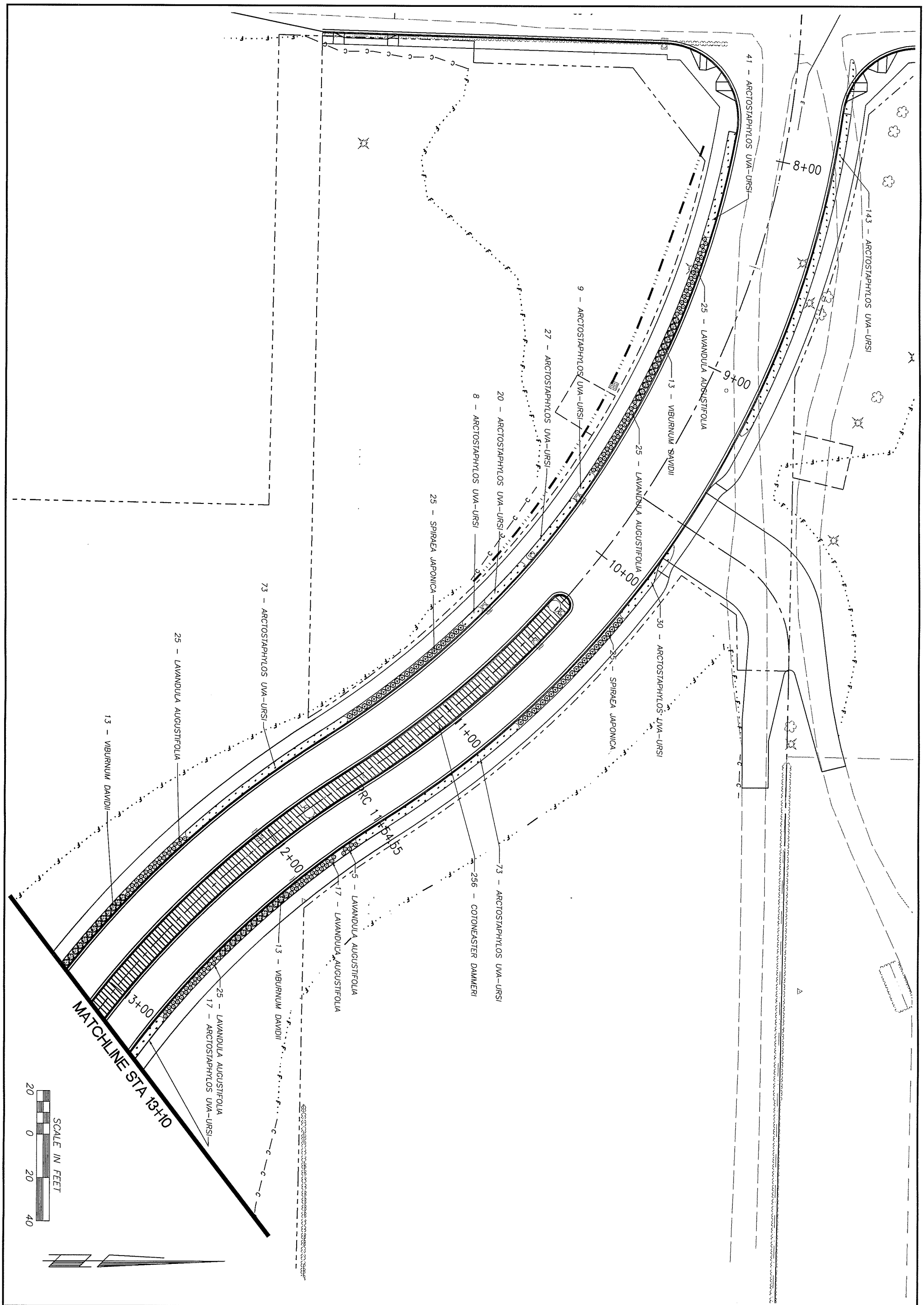

proud past, promising future

CLARK COUNTY
WASHINGTON

DESIGN & ENGINEERING DIVISION
DESIGN SECTION

NW 119TH STREET
LANDSCAPE PLAN

MICHAEL M. EMRICK
STATE OF WASHINGTON
29030
REGISTERED
PROFESSIONAL ENGINEER
EXPIRES:MAY 26, 2005

CALL 48 HOURS BEFORE YOU DIG
1-800-553-4344
"It's the Law"
NORTHWEST UTILITIES NOTIFICATION CENTER

DESIGNED	JC
DRAWN	KB
CRP	381022
HOR.	1"=40'
VERT.	NA
DATE	04/03
DWG:	LP01
SHEET	OF

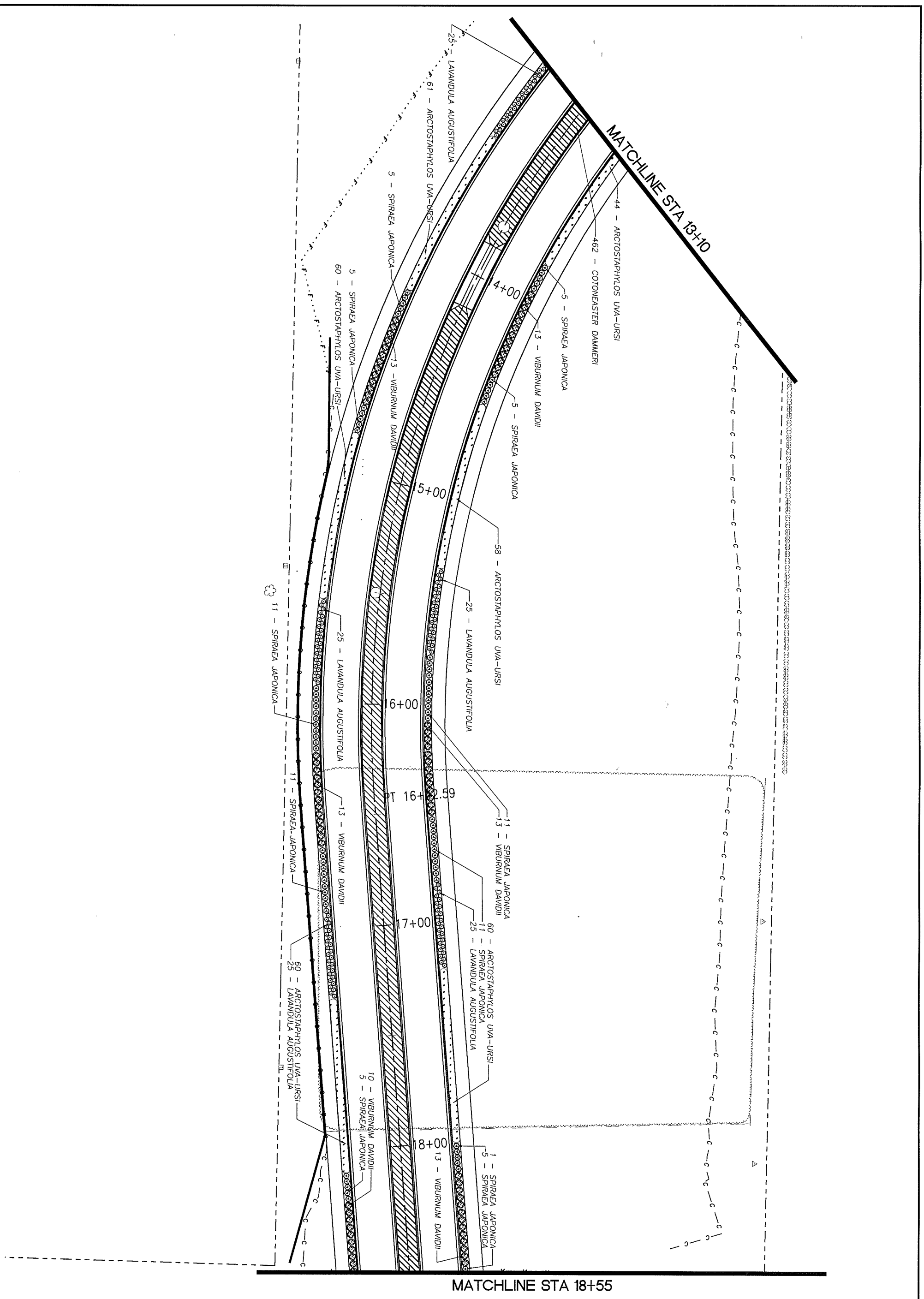

proud past, promising future

CLARK COUNTY
WASHINGTON

DESIGN & ENGINEERING DIVISION
DESIGN SECTION

NW 119TH STREET
LANDSCAPE PLAN

MICHAEL M. EMRICK
STATE OF WASHINGTON
29930
REGISTERED
PROFESSIONAL ENGINEER
EXPIRES: MAY 26, 2005

CALL 48 HOURS BEFORE YOU DIG
1-800-553-4344
"It's the Law"
NORTHWEST UTILITIES NOTIFICATION CENTER

DESIGNED	JC
DRAWN	KB
CRP	381022
HOR.	1"=40'
VERT.	NA
DATE	04/03
DWG:	LP02
SHEET	OF

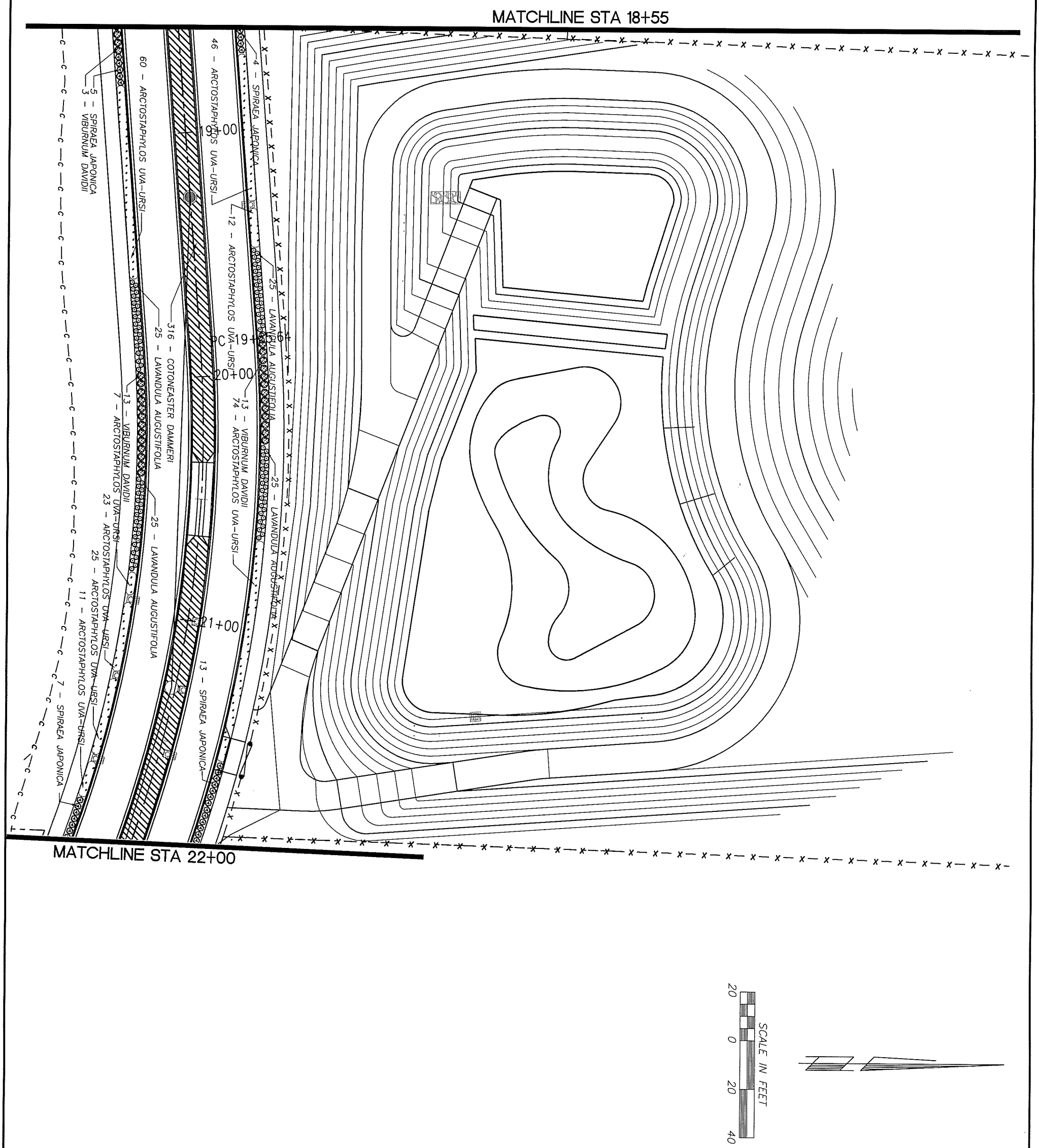

CLARK COUNTY
WASHINGTON
proud past, promising future

DESIGN & ENGINEERING DIVISION
DESIGN SECTION

NW 119TH STREET
LANDSCAPE PLAN

MICHAEL M. ENRICK
STATE OF WASHINGTON
29030
REGISTERED
PROFESSIONAL ENGINEER
EXPIRES: MAY 26, 2005

CALL 48 HOURS BEFORE YOU DIG
1-800-553-4344
"It's the Law"
NORTHWEST UTILITIES NOTIFICATION CENTER

DESIGNED	JC
DRAWN	KB
CRP	381022
HOR.	1"=20'
VERT.	NA
DATE	04/03
DWG:	LP03
SHEET	OF

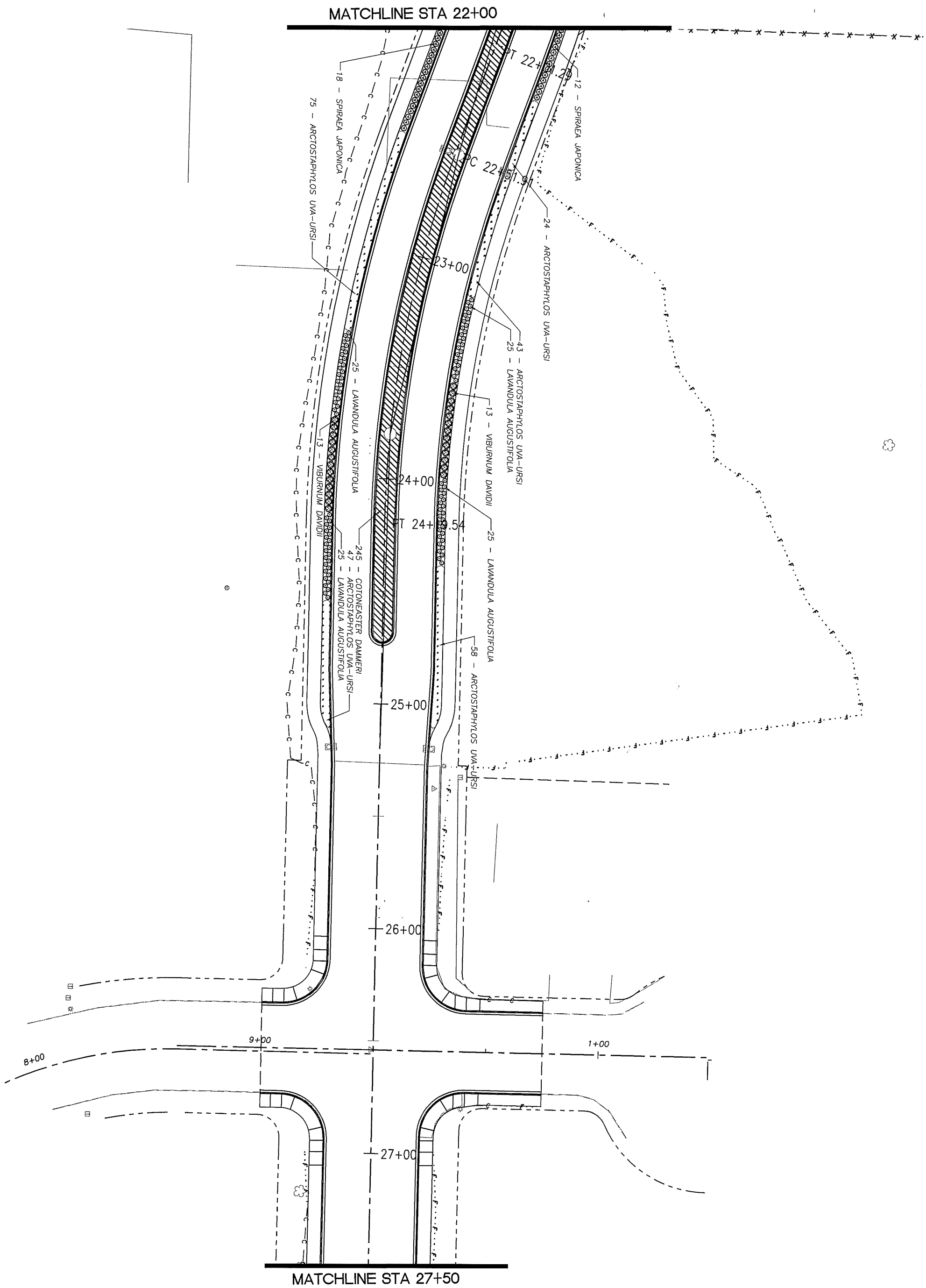

CLARK COUNTY
WASHINGTON
proud past, promising future

DESIGN & ENGINEERING DIVISION
DESIGN SECTION

NW 119TH STREET
LANDSCAPE PLAN

MICHAEL M. EMRICK
STATE OF WASHINGTON
29030
REGISTERED
PROFESSIONAL ENGINEER
EXPIRES:MAY 26, 2005

CALL 48 HOURS BEFORE YOU DIG
1-800-553-4344
"It's the Law"
NORTHWEST UTILITIES NOTIFICATION CENTER

DESIGNED	JC
DRAWN	KB
CRP	381022
HOR.	1"=20'
VERT.	NA
DATE	04/03
DWG:	LP04
SHEET	OF

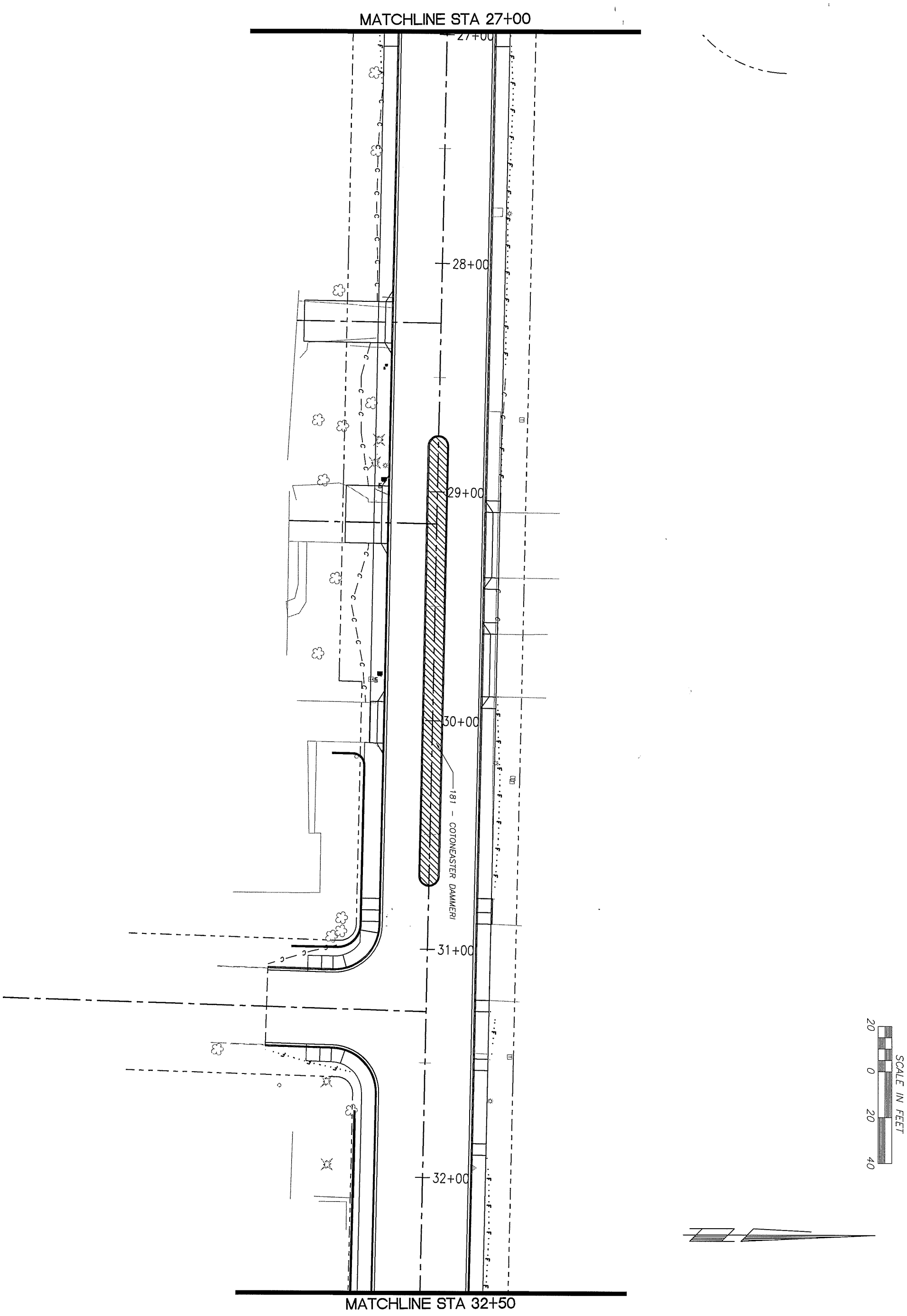

proud past, promising future

CLARK COUNTY
WASHINGTON

DESIGN & ENGINEERING DIVISION
DESIGN SECTION

NW 119TH STREET
LANDSCAPE PLAN

MICHAEL M. EMRICK
STATE OF WASHINGTON
29030
REGISTERED
PROFESSIONAL ENGINEER
EXPIRES: MAY 26, 2005

CALL 48 HOURS BEFORE YOU DIG
1-800-553-4344
"It's the Law"
NORTHWEST UTILITIES NOTIFICATION CENTER

DESIGNED	JC
DRAWN	KB
CRP	381022
HOR.	1"=20'
VERT.	NA
DATE	04/03
DWG:	LP05
SHEET	OF

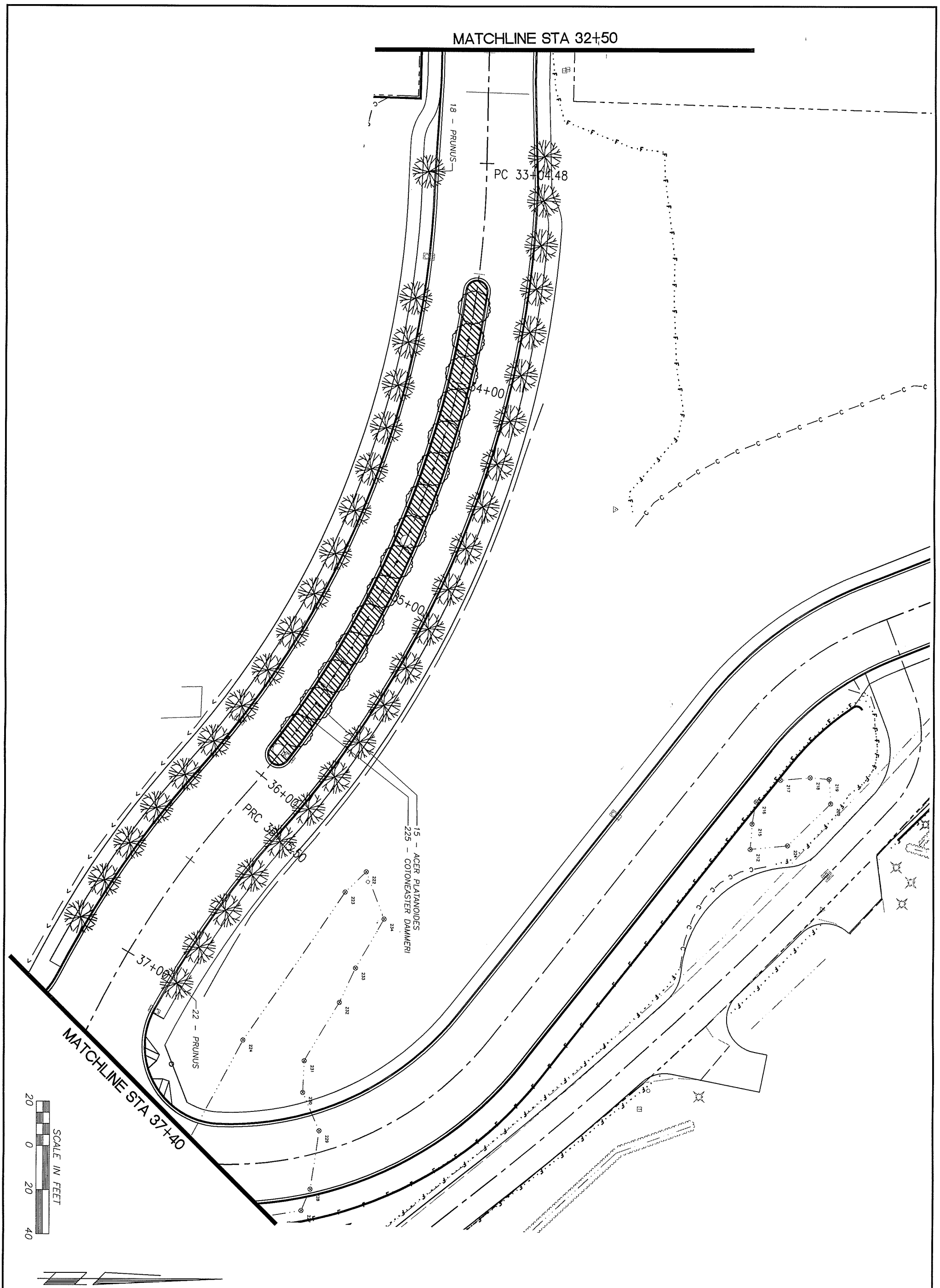

CLARK COUNTY WASHINGTON — proud past, promising future	DESIGN & ENGINEERING DIVISION DESIGN SECTION *NW 119TH STREET LANDSCAPE PLAN*	MICHAEL M. EMRICK, STATE OF WASHINGTON, 29030, REGISTERED PROFESSIONAL ENGINEER — EXPIRES: MAY 26, 2005	CALL 48 HOURS BEFORE YOU DIG 1-800-553-4344 "It's the Law" NORTHWEST UTILITIES NOTIFICATION CENTER

DESIGNED	JC
DRAWN	KB
CRP	381022
HOR.	1"=20'
VERT.	NA
DATE	04/03
DWG:	LP06
SHEET	OF

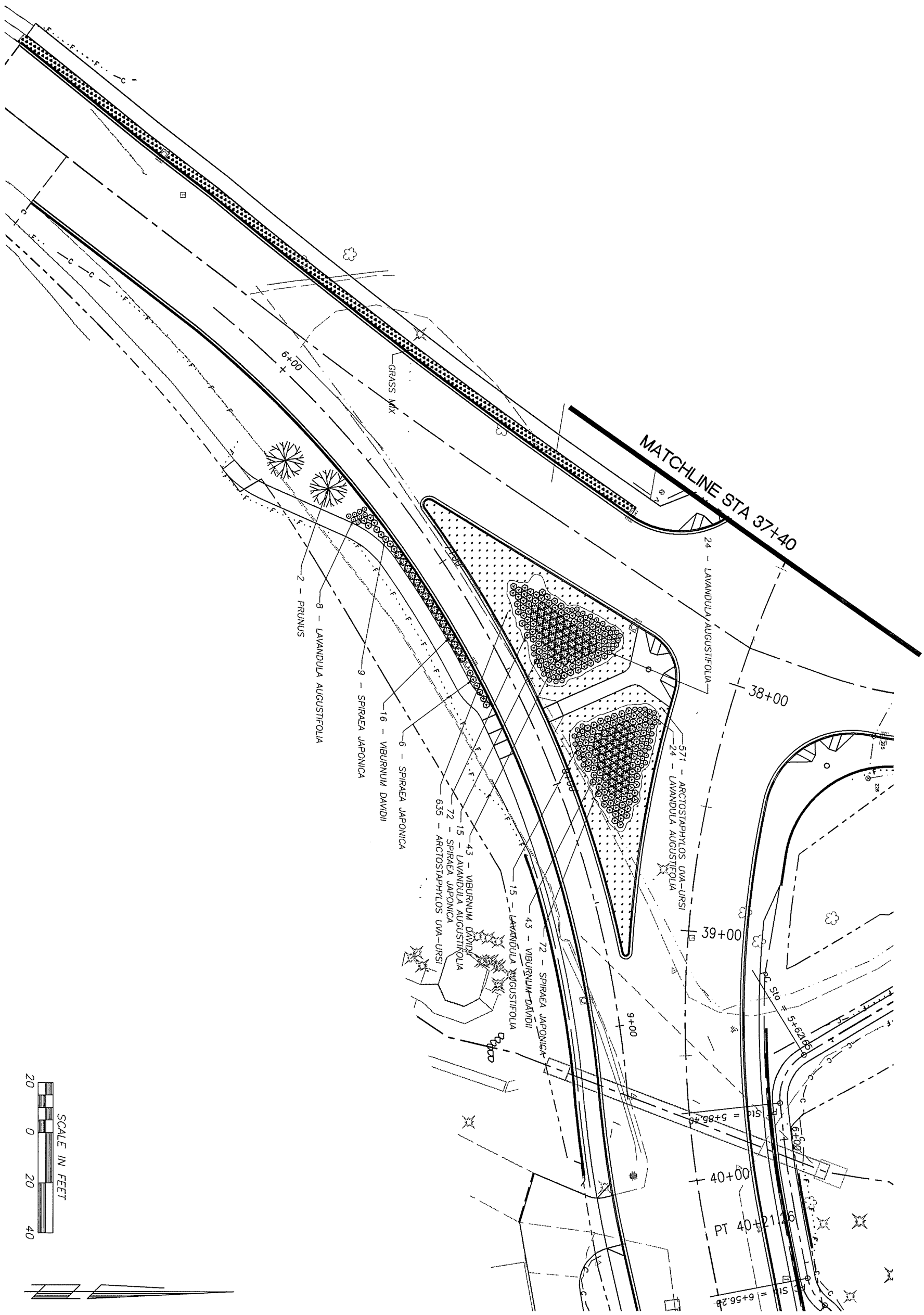

CLARK COUNTY
WASHINGTON
proud past, promising future

DESIGN & ENGINEERING DIVISION
DESIGN SECTION

NW 119TH STREET
LANDSCAPE PLAN

MICHAEL M. EMRICK
STATE OF WASHINGTON
28030
REGISTERED
PROFESSIONAL ENGINEER
EXPIRES: MAY 26, 2005

CALL 48 HOURS BEFORE YOU DIG
1-800-553-4344
"It's the Law"
NORTHWEST UTILITIES NOTIFICATION CENTER

DESIGNED	JC
DRAWN	KB
CRP	381022
HOR.	1"=20'
VERT.	NA
DATE	04/03
DWG:	LP07
SHEET	OF

PLANT TABLE

TYPE	BOTANICAL NAME/COMMON NAME	QUANTITY	SIZE	CONDITION	SPACING
TREES:					
	ACER PLATANOIDES 'CRIMSON SENTRY' / CRIMSON SENTRY NORWAY MAPLE	15	1 3/4" CAL.	B & B	AS SHOWN
	PRUNUS (YET TO BE DECIDED)	42	1 3/4" CAL.	B & B	AS SHOWN
SHRUBS:					
	LAVANDULA ANGUSTIFOLIA / ENGLISH LAVANDER	534	1 GALLON	CONTAINER	AS SHOWN
	SPIRAEA JAPONICA 'GOLDFLAME' / GOLDFLAME SPIRAEA	343	2 GALLON	CONTAINER	AS SHOWN
	VIBURNUM DAVIDII / DAVID VIBURNUM	271	2 GALLON	CONTAINER	AS SHOWN
GROUND COVER:					
	ARCTOSTAPHYLOS UVA-URSI / KINNIKINNICK	2521	1 GAL.	CONTAINER	2' O.C.
	COTONEASTER DAMMERI 'CORAL BEAUTY' / CORAL BEAUTY BEARBERRY COTONEASTER	1751	1 GAL	CONTAINER	3' O.C.
GRASS SEED MIX:	(CAN THE CONSTRUCTION CONTRACTOR HYDROSEED THIS AREA ALONG WITH THE OTHER AREAS TO BE HYDROSEEDED WITHIN THE PROJECT?)	963 SQ. FT.			AS SHOWN

PLANTING NOTES

1. CONTRACTOR SHALL VERIFY ALL QUANTITIES, MEASUREMENTS, AND SITE CONDITIONS.
2. PLANTING PERIOD IS FROM APPROXIMATELY OCTOBER 15 TO APRIL 15, WEATHER DEPENDENT.
3. CONTRACTOR SHALL VERIFY THE LOCATION OF ALL EXISTING UTILITIES.
4. INSTALLED PLANTS SHALL BE IMMEDIATELY WATERED IN BY CONTRACTOR.
5. ALL PLANT MATERIALS SHALL CONFORM IN SIZE AND GRADE TO THE "AMERICAN STANDARD FOR NURSERY STOCK", CURRENT EDITION.
6. PLANTS SHALL BE INSTALLED ACCORDING TO DETAILS SHOWN.
7. NO SUBSTITUTIONS IN PLANT VARIETIES SHALL BE MADE WITHOUT APPROVAL FROM CLARK COUNTY PARKS MAINTENANCE.
8. LANDSCAPE WORK SHALL BE REVIEWED AND APPROVED BY CLARK COUNTY PARKS MAINTENANCE. SOME FIELD ADJUSTMENT MAY BE NECESSARY TO REFLECT ACTUAL GRADING AND SITE CONDITIONS.
9. FOLLOWING PLANT INSTALLATION, 4 INCHES OF APPROVED BARK MULCH SHALL BE PLACED AROUND EACH PLANTING, THROUGHOUT THE PLANTING STRIPS, WITH SPECIAL CARE TO NOT BURY THE PLANTINGS.
10. FOLLOWING PLANTING, TREES SHALL BE STAKED ACCORDING TO DETAIL SHOWN.
11. FOLLOWING COMPLETION OF LANDSCAPE PROJECT, SITE SHALL BE MAINTAINED WEEKLY. MAINTENANCE SHALL INCLUDE: ADEQUATE WATERING OF ALL INSTALLED PLANTINGS TO ENSURE HEALTH AND SURVIVAL, REMOVING WEEDS, MONITOR TREE STAKES AND TIES TO ENSURE PROPER SUPPORT AND TO PREVENT TIES FROM GIRDLING TRUNKS. REMOVE TREE STAKES AND TIES AFTER ONE YEAR MINIMUM, OR AS NEEDED UNTIL ADEQUATE ANCHORING IS ATTAINED. BARK MULCH SHALL BE REAPPLIED AS NEEDED.

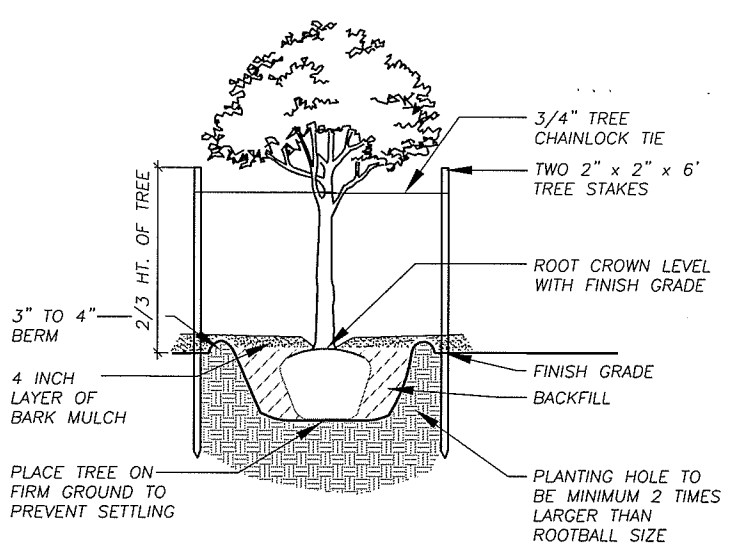

TREE PLANTING DETAIL

NOT TO SCALE

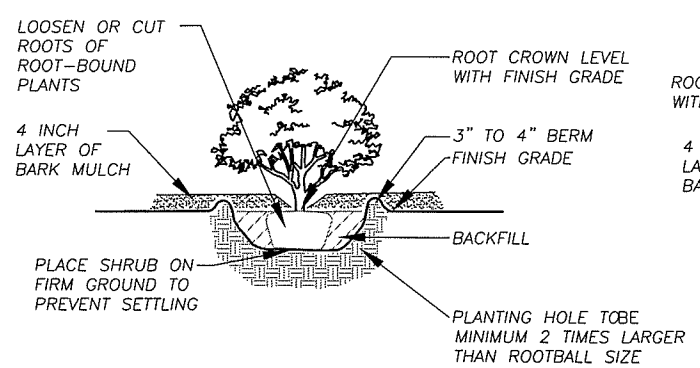

SHRUB PLANTING DETAIL

NOT TO SCALE

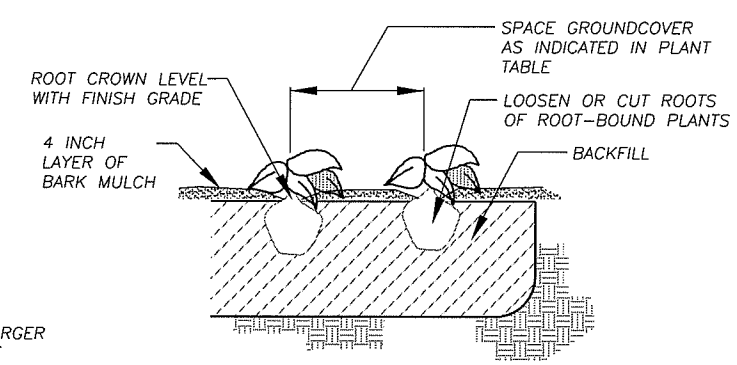

GROUNDCOVER PLANTING DETAIL

NOT TO SCALE

DESIGNED JC
DRAWN JC
CRP 381022
HOR. NA
VERT. NA
DATE 04/03
DWG: LP08
SHEET OF

CALL 48 HOURS BEFORE YOU DIG 1-800-553-4344 "It's the Law" NORTHWEST UTILITIES NOTIFICATION CENTER

STATE OF WASHINGTON MICHAEL M. EMRICK REGISTERED PROFESSIONAL ENGINEER EXPIRES JANUARY 15, 2005

DESIGN & ENGINEERING DIVISION
DESIGN SECTION

NW 119TH STREET
LANDSCAPE DETAILS AND NOTES

proud past, promising future
CLARK COUNTY WASHINGTON

N:\CIP\PROJECTS\381022-NW117-119\ENVIRONMENTAL PERMITTING\MISC\LP119base.dwg, details & notes, 10/5/2004 9:50:55 AM, begleyk

CLARK COUNTY
NW 119TH / 117TH STREET EXTENSION

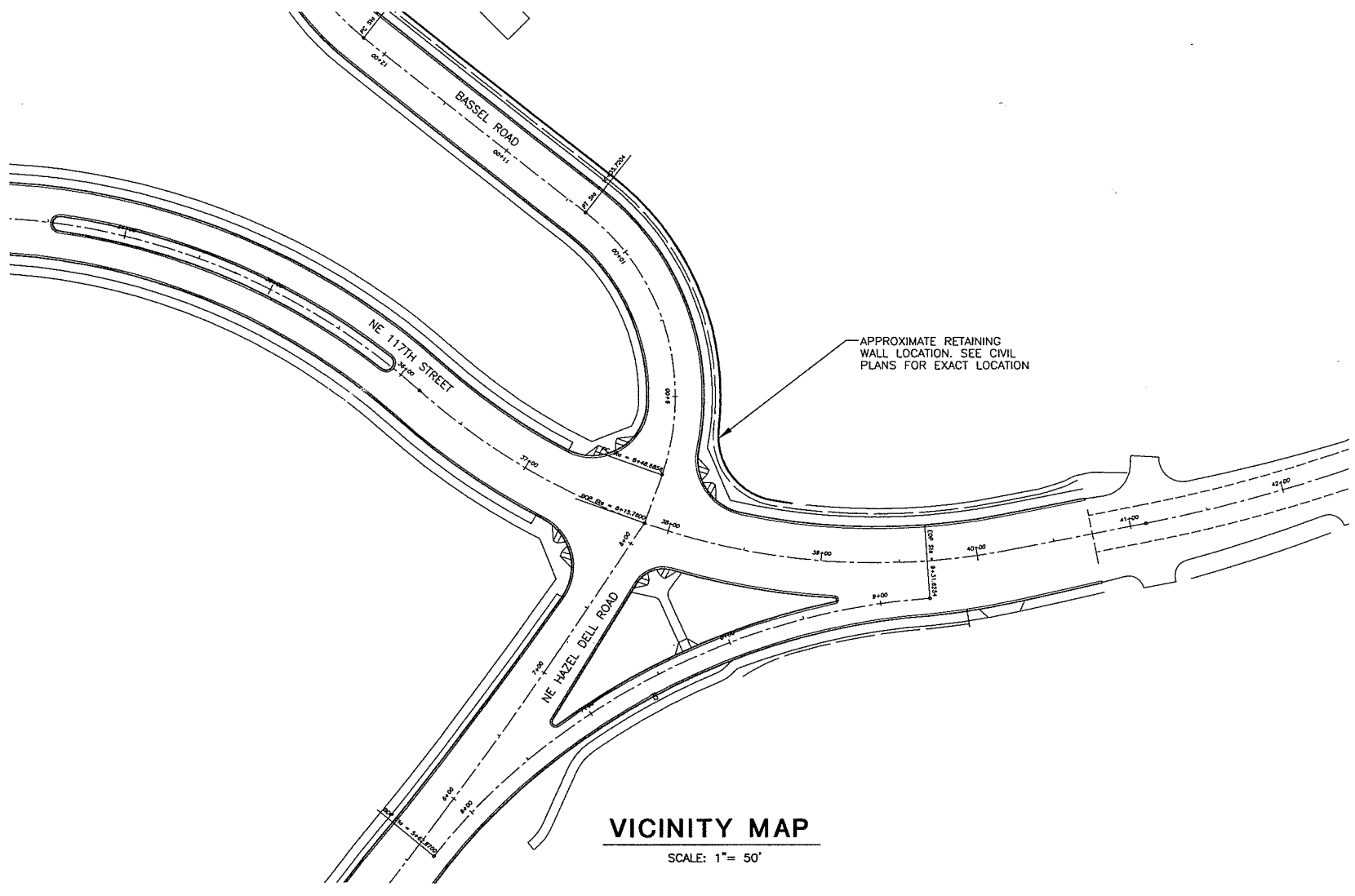

VICINITY MAP

SCALE: 1"= 50'

DRAWING INDEX

DRAWING NUMBER	DRAWING TITLE
RW–1	COVER SHEET
RW–2	KEYSTONE WALL PROFILE–BASSEL ROAD
RW–3	KEYSTONE WALL TYPICAL SECTIONS AND DETAILS
RW–4	TRAFFIC BARRIER SECTIONS AND DETAILS
RW–5	CONSTRUCTION NOTES

NOT FOR CONSTRUCTION OR BIDDING

SHEETS RW1-RW4 SUBMITTED WITH DESIGN REPORT FOR PROJECT NUMBER 3782-016-01 TO CLARK COUNTY ON 09/24/01.

STAMPED CONSTRUCTION DRAWINGS ARE INCLUDED IN THE PROJECT DESIGN PACKAGE AS SHEETS RW1-RW4.

DESIGNED SPM
DRAWN MWJ
CRP 381022
HOR. 1"=50'
VERT. 1"=50'
DATE 09/19/02
DWG: RW–1
SHEET 1 OF 5

CALL 48 HOURS BEFORE YOU DIG 1–800–553–4344 "It's the Law" NORTHWEST UTILITIES NOTIFICATION CENTER

DESIGN & ENGINEERING DIVISION

COVER SHEET

proud past, promising future

CLARK COUNTY WASHINGTON

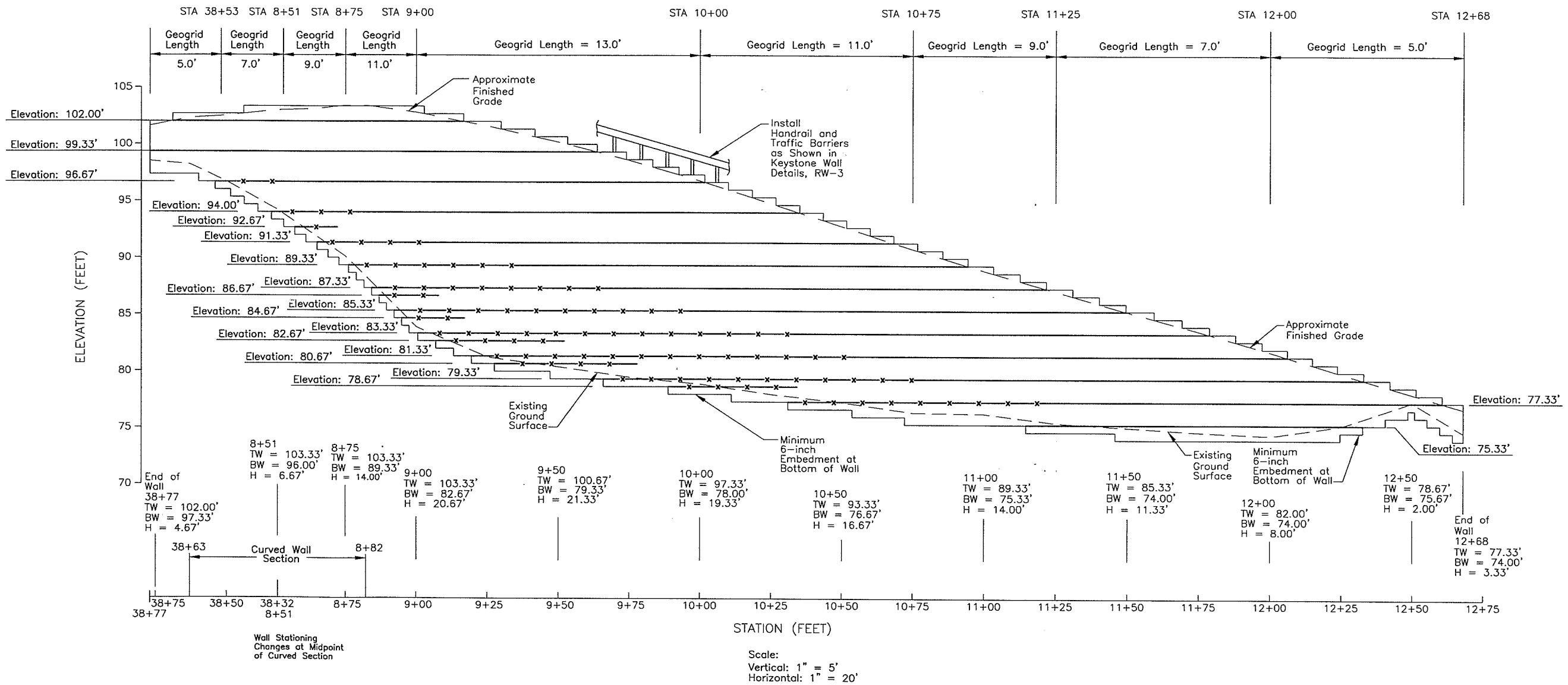

EXPLANATION:

TENSAR UX1400SB GEOGRID LOCATION

TENSAR UX1500SB GEOGRID LOCATION

TW = ELEVATION AT TOP OF WALL (NOT INCLUDING CAP BLOCKS)
BW = ELEVATION AT BOTTOM OF WALL (INCLUDES EMBEDMENT)
H = WALL HEIGHT

NOTES:

1. See civil drawings for wall location.
2. Verify finished grades with civil drawings.
3. Cap blocks not shown on profile view. See sheet RW-3.

Reference: Drawing based on ground elevations provided by Clark County.

NOT FOR CONSTRUCTION OR BIDDING

SHEETS RW1-RW4 SUBMITTED WITH DESIGN REPORT FOR PROJECT NUMBER 3782-016-01 TO CLARK COUNTY ON 09/06/01.

STAMPED CONSTRUCTION DRAWINGS ARE INCLUDED IN THE PROJECT DESIGN PACKAGE AS SHEETS RW1-RW4.

DESIGNED	SPM
DRAWN	MWJ
CRP	381022
HOR.	1"=20'
VERT.	1"=5'
DATE	09/19/02
DWG:	RW-2
SHEET 2	OF 5

CALL 48 HOURS BEFORE YOU DIG
1-800-553-4344
"It's the Law"
NORTHWEST UTILITIES NOTIFICATION CENTER

DESIGN & ENGINEERING DIVISION

KEYSTONE WALL PROFILE-BASSEL ROAD

proud past, promising future
CLARK COUNTY
WASHINGTON

BASE LEVELING PAD NOTES:

THE BASE FOUNDATION IS TO BE APPROVED BY THE GEOTECHNICAL ENGINEER PRIOR TO PLACEMENT OF THE LEVELING PAD.

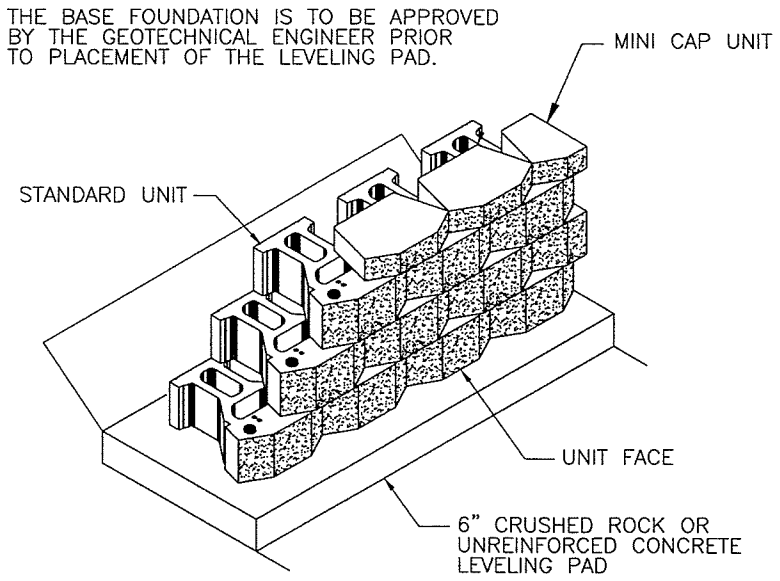

STANDARD UNIT/BASE PAD ISOMETRIC VIEW
SCALE: 3/8" = 1'-0"

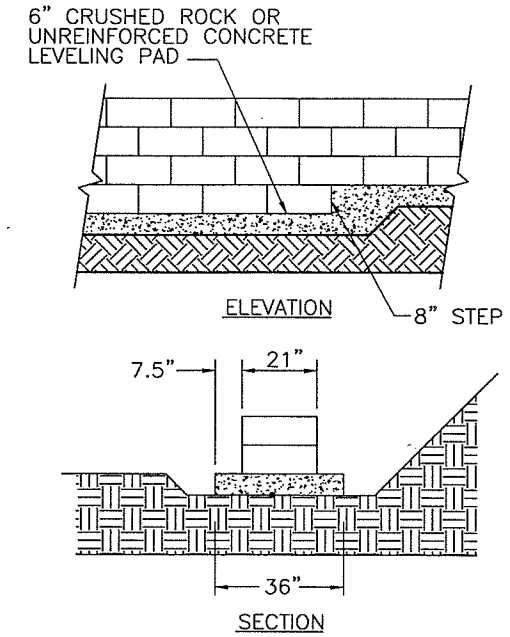

LEVELING PAD DETAIL
SCALE: 1/4" = 1'-0"

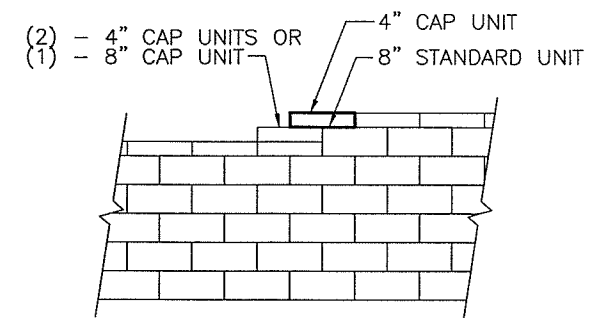

TOP OF WALL STEPS
SCALE: 1/4" = 1'-0"

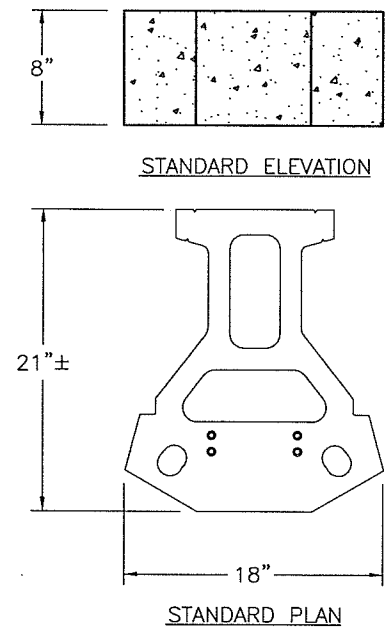

STANDARD UNIT
SCALE: 1" = 1'-0"

NOTE:

1. CHECK WITH MANUFACTURER SPECIFICATIONS ON CORRECT DIRECTION OF ORIENTATION FOR GEOGRID TO OBTAIN PROPER STRENGTH.

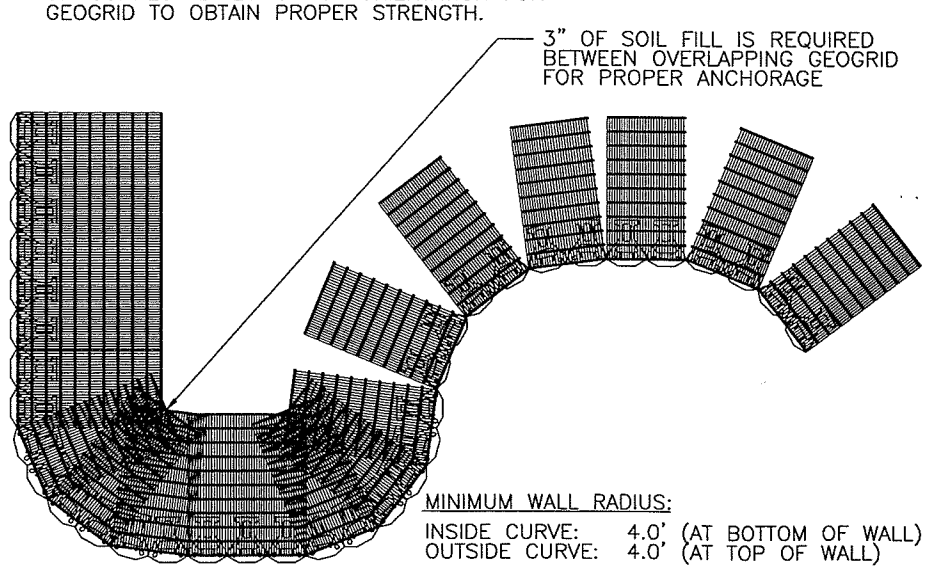

MINIMUM WALL RADIUS:
INSIDE CURVE: 4.0' (AT BOTTOM OF WALL)
OUTSIDE CURVE: 4.0' (AT TOP OF WALL)

GEOGRID INSTALLATION ON CURVES
SCALE: 5/32" = 1'-0"

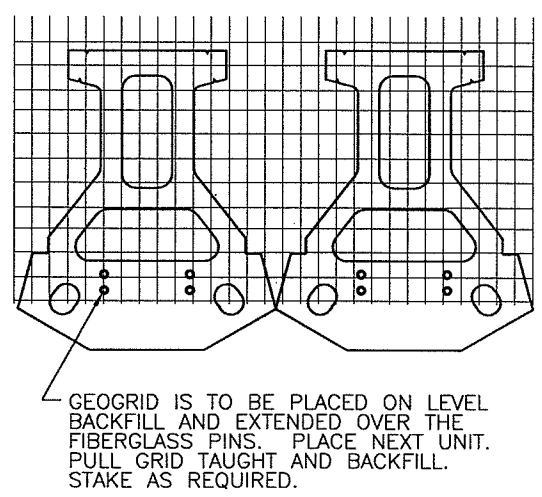

GRID & PIN CONNECTION
SCALE: 1" = 1'-0"

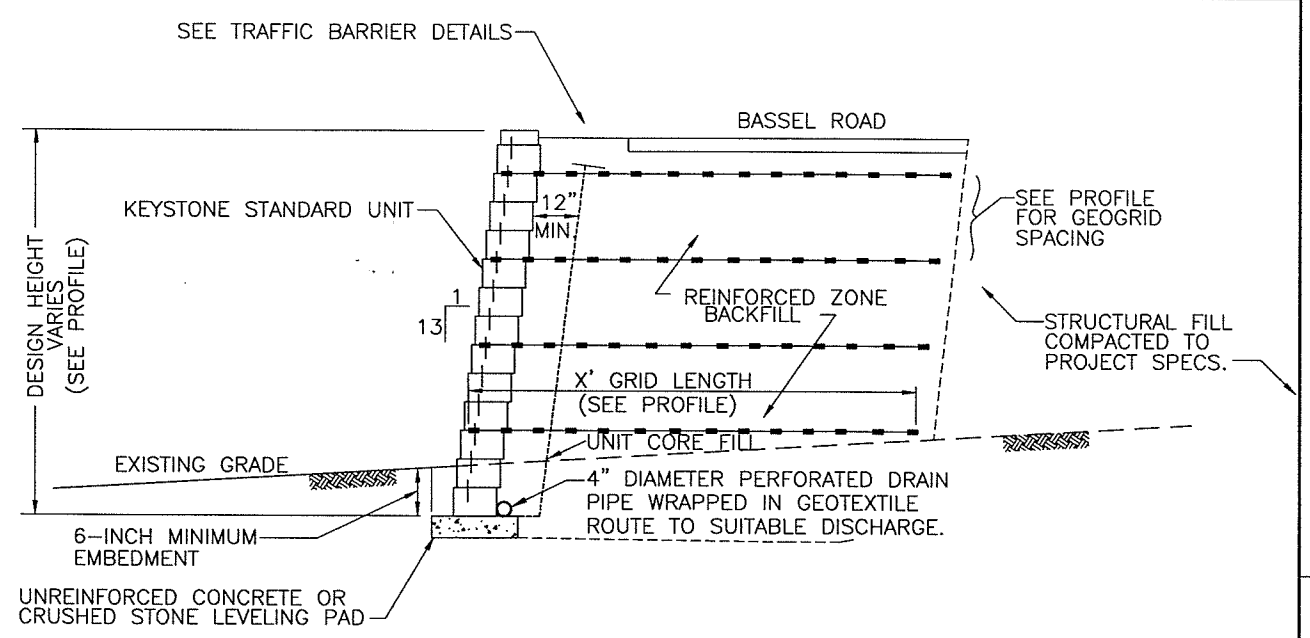

TYPICAL REINFORCED SECTION

NOT FOR CONSTRUCTION OR BIDDING

SHEETS RW1-RW4 SUBMITTED WITH DESIGN REPORT FOR PROJECT NUMBER 3782-016-01 TO CLARK COUNTY ON 09/06/01.

STAMPED CONSTRUCTION DRAWINGS ARE INCLUDED IN THE PROJECT DESIGN PACKAGE AS SHEETS RW1-RW4.

DESIGNED	SPM
DRAWN	MWJ
CRP	381022
HOR.	NTS
VERT.	NTS
DATE	09/19/02
DWG:	RW-3
SHEET 3	OF 5

CALL 48 HOURS BEFORE YOU DIG 1-800-553-4344 "It's the Law" NORTHWEST UTILITIES NOTIFICATION CENTER

DESIGN & ENGINEERING DIVISION

KEYSTONE WALL TYPICAL SECTIONS AND DETAILS

proud past, promising future
CLARK COUNTY WASHINGTON

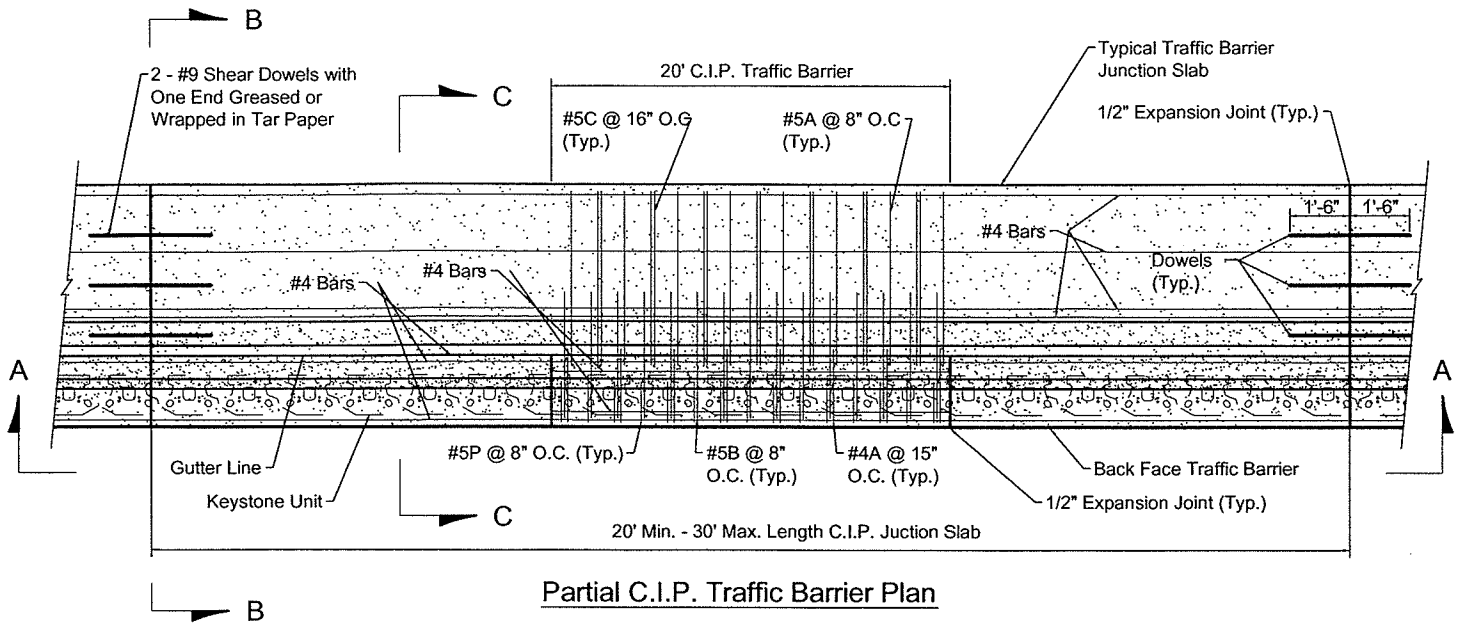

Partial C.I.P. Traffic Barrier Plan

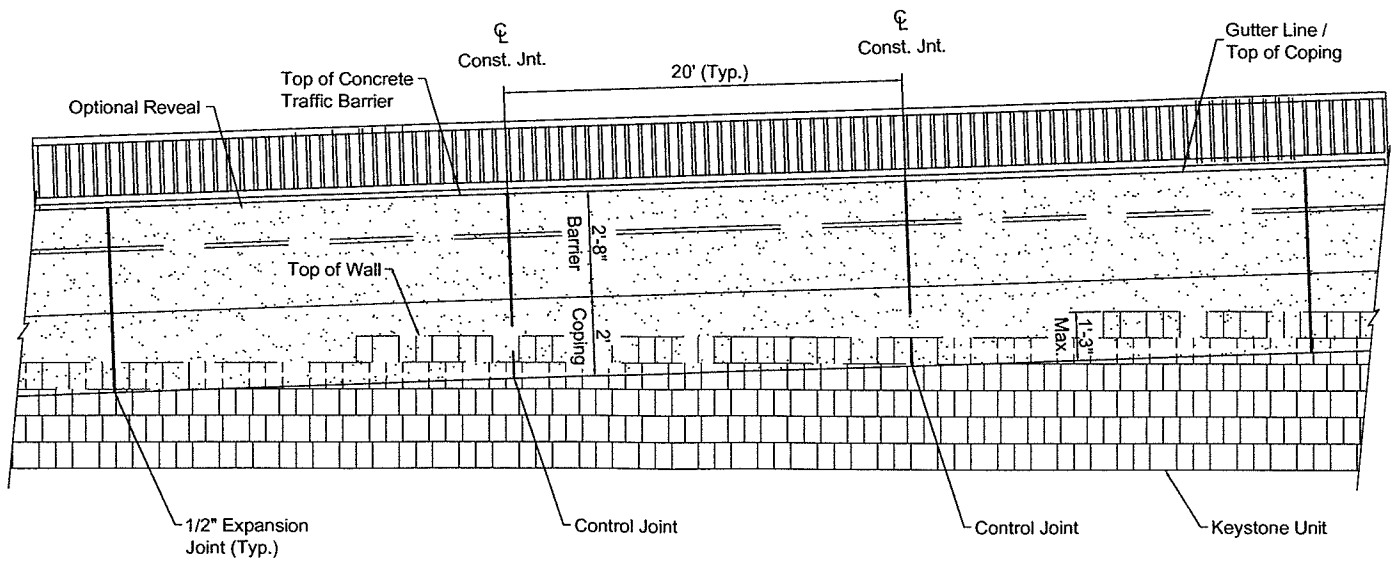

Partial Elevation A - A

Note:

1. All longitudinal bars are #4 as shown
2. Concrete cover 2" (Typ.)

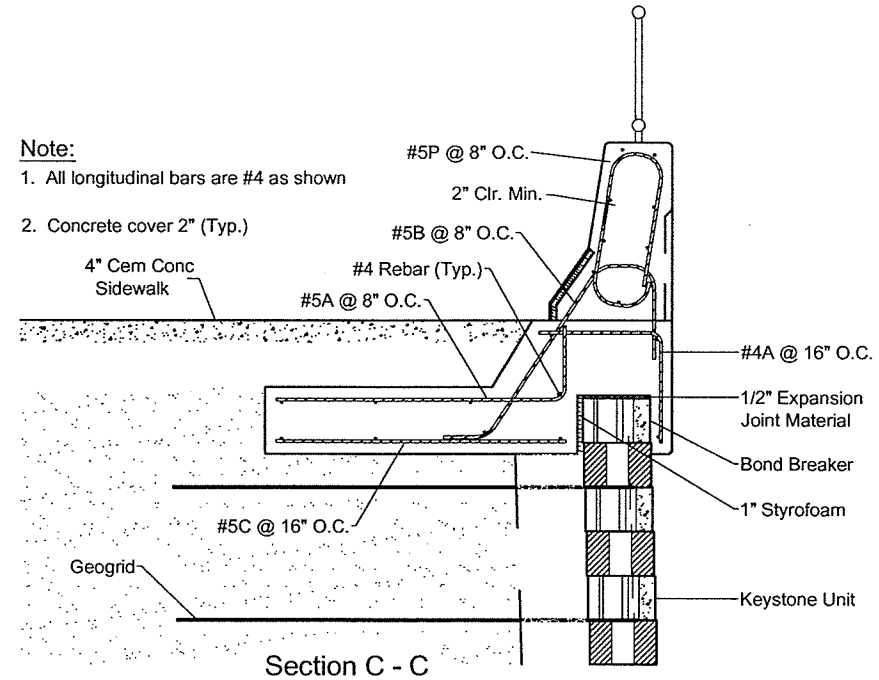

Section C - C
Reinforcement

Note:

1. If short C.I.P. barrier sections are to be constructed adjacent to precast barrier sections, then this sections dimensions shall be adjusted to conform to the precast dimensions.
2. Elevations shown are at the labeled gutter point.

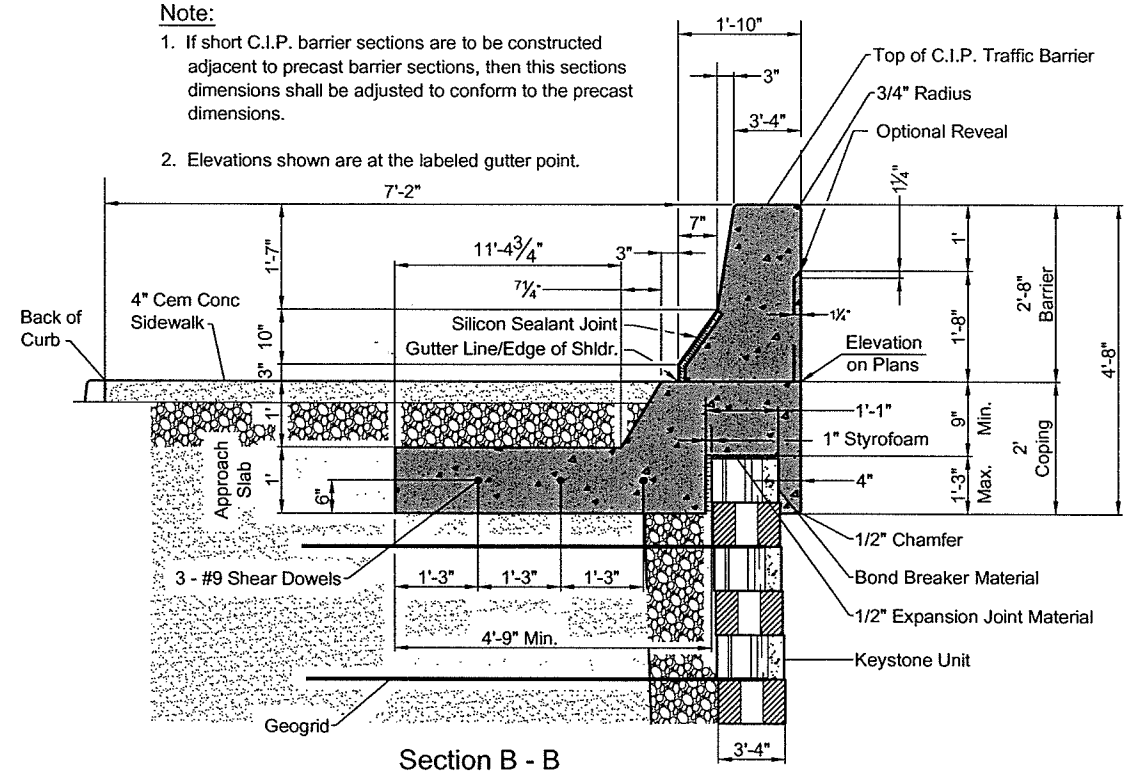

Section B - B
C.I.P. Concrete Traffic Barrier

NOT FOR CONSTRUCTION OR BIDDING

SHEETS RW1-RW4 SUBMITTED WITH DESIGN REPORT FOR PROJECT NUMBER 3782-016-01 TO CLARK COUNTY ON 09/06/01.

STAMPED CONSTRUCTION DRAWINGS ARE INCLUDED IN THE PROJECT DESIGN PACKAGE AS SHEETS RW1-RW4.

DESIGNED	SPM
DRAWN	MWJ
CRP	381022
HOR.	NTS
VERT.	
DATE	10/02/02
DWG.	RW-4
SHEET 4	OF 5

CALL 48 HOURS BEFORE YOU DIG 1-800-553-4344 "It's the Law" NORTHWEST UTILITIES NOTIFICATION CENTER

DESIGN & ENGINEERING DIVISION

TRAFFIC BARRIER SECTIONS AND DETAILS

proud past, promising future

CLARK COUNTY WASHINGTON

CONSTRUCTION NOTES FOR KEYSTONE RETAINING WALL

GENERAL

CONSTRUCTION METHODS

REMOVE TOPSOIL, BRUSH, SOD OR OTHER ORGANIC OR DELETERIOUS MATERIALS PRIOR TO CONSTRUCTION OF THE REINFORCED SOIL RETAINING WALL. PRIOR TO PLACING LEVELING PAD, NOTIFY ENGINEER TO OBSERVE FOUNDATION SUBGRADE SOILS. OVER-EXCAVATE AND AND REPLACE SOFT AREAS AS DIRECTED BY THE ENGINEER.

PLACE FILL IN HORIZONTAL LAYERS NOT EXCEEDING 12 INCHES IN UNCOMPACTED THICKNESS FOR HEAVY COMPACTION EQUIPMENT. FOR ZONES WHERE COMPACTION IS ACCOMPLISHED WITH HAND OPERATED EQUIPMENT, FILL SHALL BE PLACED IN HORIZONTAL LAYERS NOT EXCEEDING 6 INCHES IN UNCOMPACTED THICKNESS.

COMPACT FILL TO AT LEAST 95% OF THE MAXIMUM DENSITY DETERMINED IN ACCORDANCE WITH ASTM D-1557 (MODIFIED PROCTOR DENSITY).

ALLOW ENGINEER TO OBSERVE FILL PLACEMENT AND PERFORM COMPACTION TESTING.

MAINTAIN WALL ALIGNMENT AT ALL TIMES DURING CONSTRUCTION.

MATERIALS

FILL SOILS

REINFORCED FILL AND UNIT FILL MATERIAL SHALL CONSIST OF CRUSHED SURFACING BASE COURSE CONFORMING TO SECTION 9-03.9(3) OF THE WASHINGTON STATE DEPARTMENT OF TRANSPORTATION SPECIFICATIONS. REINFORCED FILL AND UNIT FILL MATERIAL SHALL BE APPROVED BY THE ENGINEER.

FILL CONTAINING BRUSH, SOD, PEAT, ROOTS OR OTHER ORGANIC, PERISHABLE OR DELETERIOUS MATTER, INCLUDING, BUT NOT LIMITED TO SNOW, ICE OR FROZEN SOILS, SHALL BE CONSIDERED UNSUITABLE MATERIAL AND SHALL BE REPLACED.

TENSAR GEOGRID PLACEMENT

PLACE TENSAR GEOGRID AT THE LOCATION AND ELEVATIONS SHOWN ON THE DRAWINGS.

TENSAR GEOGRIDS SHALL BE ATTACHED FIRMLY BETWEEN THE KEYSTONE BLOCK SECTIONS OVER THE TWO FIBERGLASS CONNECTING PINS.

PRIOR TO PLACING FILL, THE GEOGRID MATERIALS SHALL BE PULLED TIGHT TO REMOVE ANY SLACK IN THE GEOGRIDS AND REMOVE ANY SLACK AROUND THE CONNECTING PINS.

FILL MATERIALS SHALL BE PLACED FROM THE BACK FACE OF THE BLOCK BACK TOWARDS THE FILL TO ENSURE FURTHER TENSIONING OF THE GEOGRID MATERIALS.

DRAINAGE

BACKFILL SHALL BE GRADED AWAY FROM THE WALL FACE AND ROLLED AT THE END OF EACH WORK DAY TO PREVENT PONDING OF WATER ON SURFACE OF THE REINFORCED SOIL MASS.

PERMANENT SURFACE WATER DIVERSION, DRAINAGE AND SITE GRADING ARE SHOWN IN THE SITE GRADING PLAN FOR THE PROJECT. COORDINATE WALL CONSTRUCTION ADJACENT TO OR INCLUDING DRAINAGE IMPROVEMENTS AND WATER DIVERSION IMPROVEMENTS WITH THE OTHER CONTRACTORS AND THE SITE ENGINEER.

NOT FOR CONSTRUCTION OR BIDDING

SHEETS RW1-RW4 SUBMITTED WITH DESIGN REPORT FOR PROJECT NUMBER 3782-016-01 TO CLARK COUNTY ON 09/06/01.

STAMPED CONSTRUCTION DRAWINGS ARE INCLUDED IN THE PROJECT DESIGN PACKAGE AS SHEETS RW1-RW4.

DESIGNED	SPM
DRAWN	MWJ
CRP	381022
HOR.	NTS
VERT.	
DATE	09/19/02
DWG.	RW-5
SHEET 5	OF 5

CALL 48 HOURS BEFORE YOU DIG 1-800-553-4344 "It's the Law" NORTHWEST UTILITIES NOTIFICATION CENTER

DESIGN & ENGINEERING DIVISION

CONSTRUCTION NOTES

proud past, promising future

CLARK COUNTY WASHINGTON

CLARK COUNTY
NORTHWEST 119TH/117TH STREET EXTENSION
SUDS CREEK CROSSING RETAINING WALLS

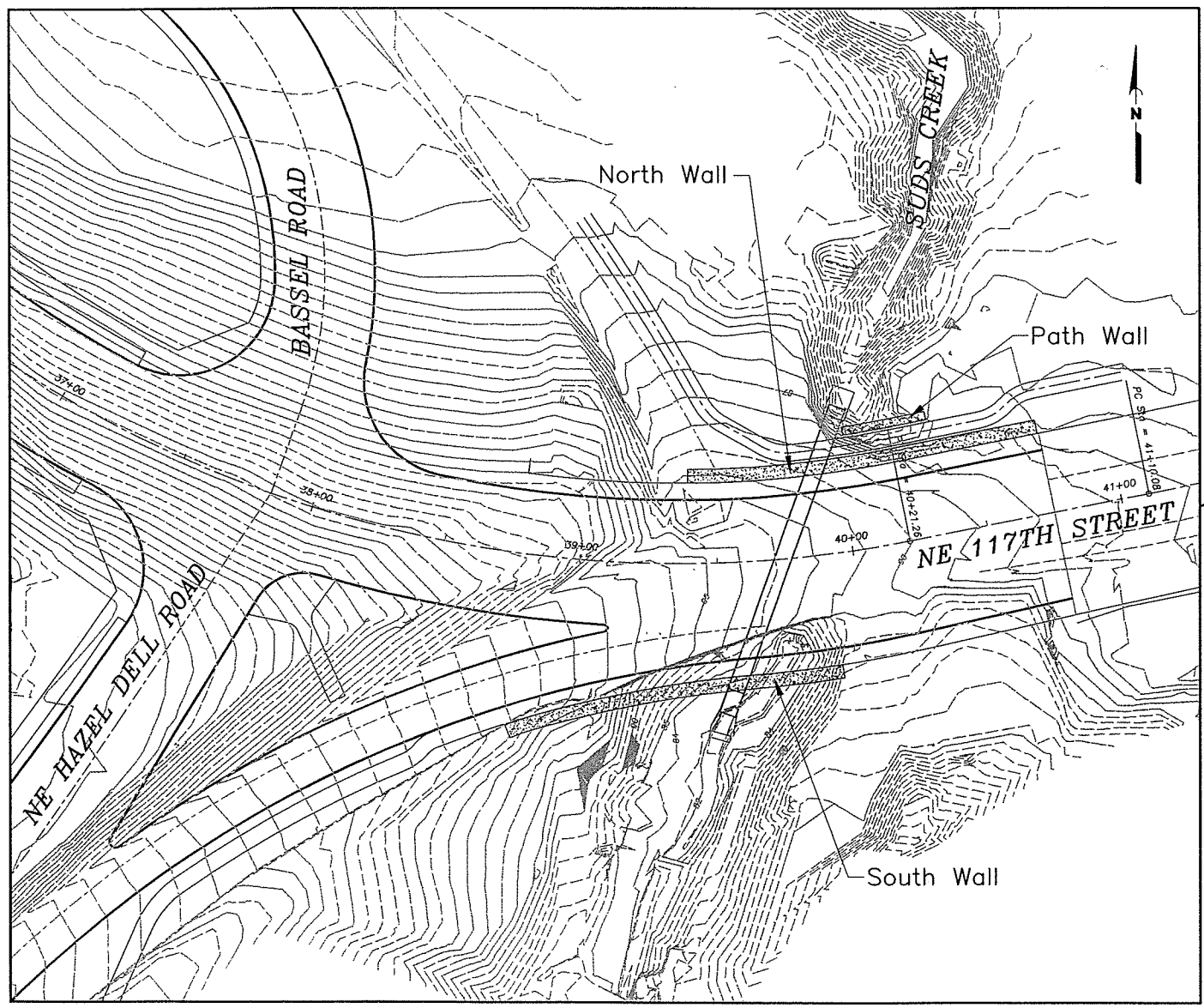

SITE PLAN

0 30 60
SCALE IN FEET

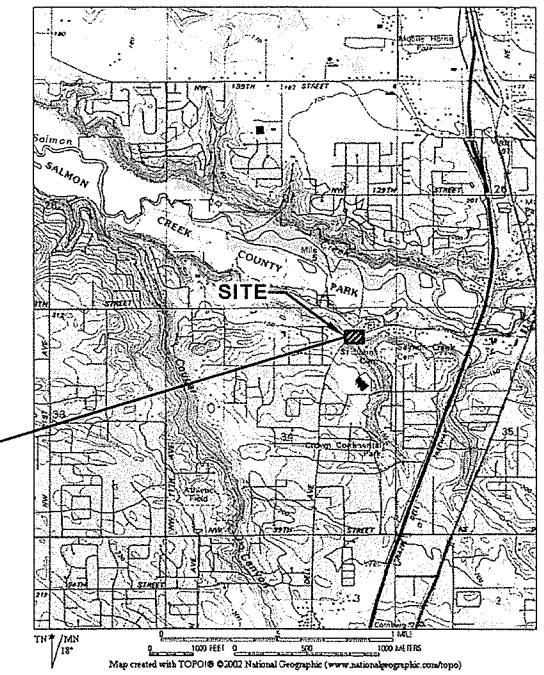

VICINITY MAP

DRAWING INDEX

DRAWING NUMBER	DRAWING TITLE
RWS–1	COVER SHEET
RWS–2	SITE PLAN
RWS–3	SUDS CREEK SOUTH WALL PROFILE
RWS–4	SUDS CREEK NORTH WALL PROFILE
RWS–5	SUDS CREEK PATH WALL PROFILE
RWS–6	ULTRABLOCK WALL TYPICAL SECTIONS AND DETAILS
RWS–7	CONSTRUCTION NOTES

99% DESIGN PLANS

Revision	Description	Date	By	Chk	Rev
0	50% design plans.	7/16/04	MWJ	TNH	TWB
1	99% design plans.	9/30/04	MWJ	TNH	TWB

DESIGNED: TNH
DRAWN: MWJ
CHECKED: TWB
SCALE: NA
DATE: 07/16/04
FILE: 3782-016-01

GEOENGINEERS
15055 SW SEQUOIA PKWY
SUITE 140
PORTLAND, OREGON 97224
P: 503/624-9274
F: 503/620-5949

CLARK COUNTY
SUDS CREEK CROSSING
RETAINING WALLS

COVER SHEET

Drawing No. RWS–1

Sheet 1 of 7

Portland\P:\3\3782016\01\CAD\Ultrablock\Figure_RWS1.dwg TNH:MWJ 09/30/04

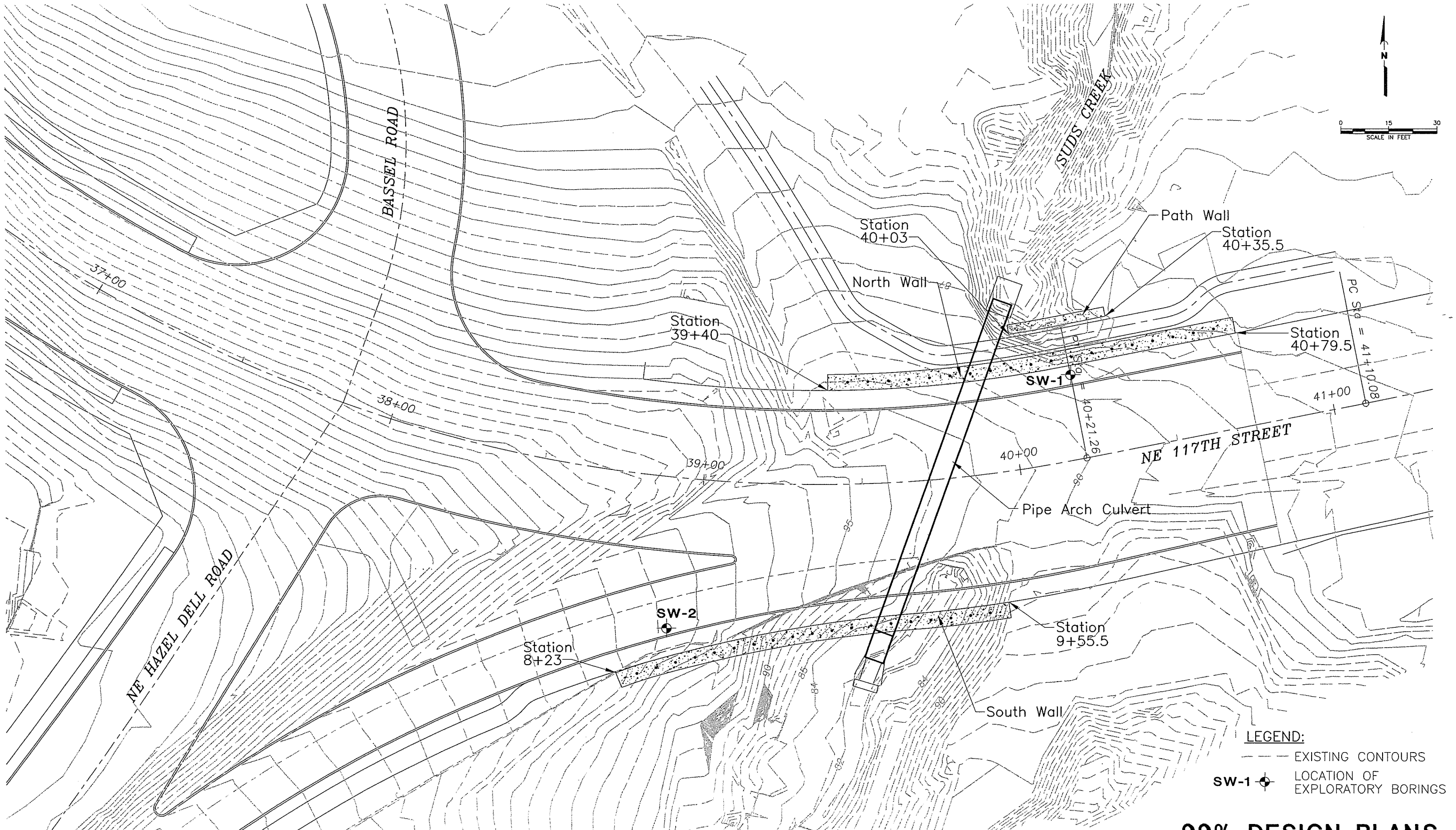

Reference: Base map provided by Clark County.

99% DESIGN PLANS

Revision	Description	Date	By	Chk	Rev
0	50% design plans.	7/16/04	MWJ	TNH	TWB
1	99% design plans.	9/30/04	MWJ	TNH	TWB

DESIGNED: TNH SCALE: NA
DRAWN: MWJ DATE: 07/16/04
CHECKED: TWB FILE: 3782-016-01

GEOENGINEERS
15055 SW SEQUOIA PKWY
SUITE 140
PORTLAND, OREGON 97224
P: 503/624-9274
F: 503/620-5940

CLARK COUNTY
SUDS CREEK CROSSING
RETAINING WALLS

SITE PLAN

Drawing No. RWS-2

Sheet 2 of 7

Portland\P:\3\3782016\01\CAD\Ultrablock\Figure_RWS2.dwg TNH:MWJ 09/30/04

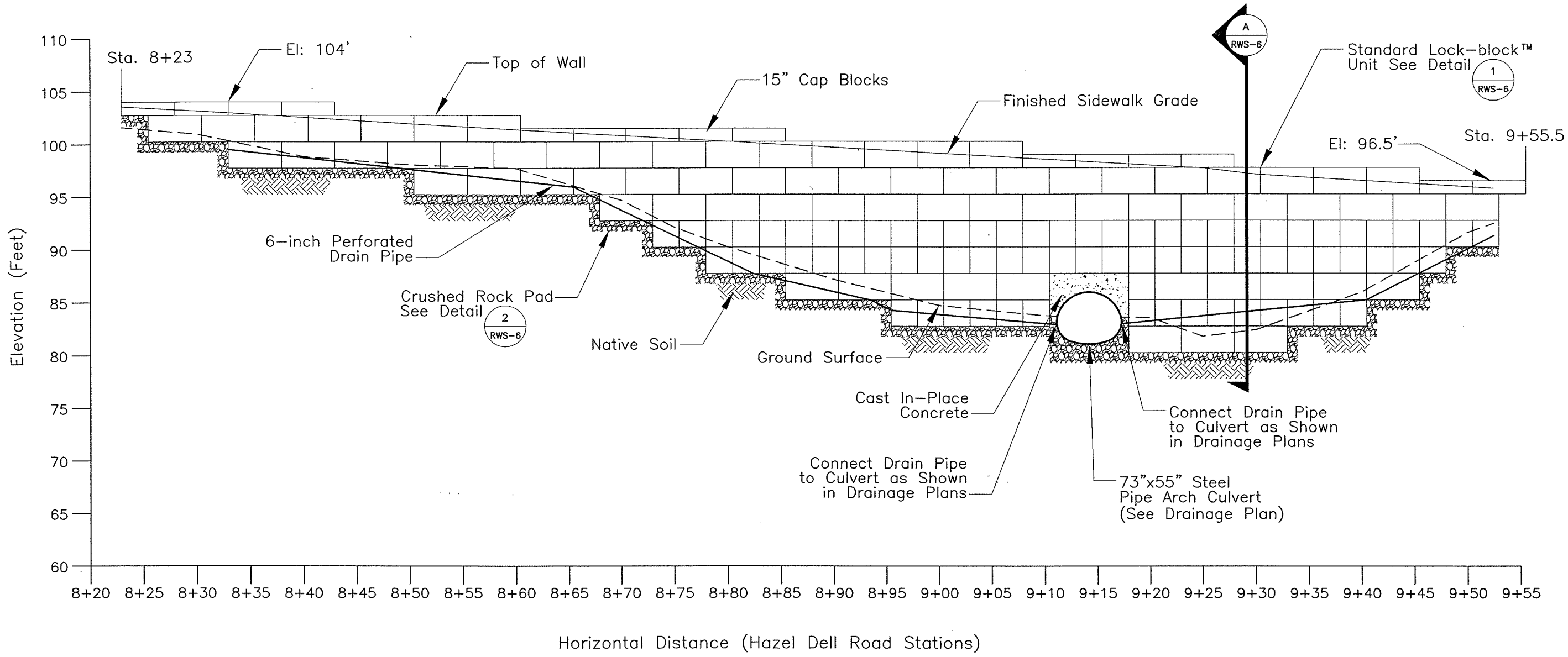

99% DESIGN PLANS

Revision	Description	Date	By	Chk	Rev
0	50% design plans.	7/16/04	MWJ	TNH	TWB
1	99% design plans.	9/30/04	MWJ	TNH	TWB

DESIGNED: TNH
SCALE: NA
DRAWN: MWJ
DATE: 07/16/04
CHECKED: TWB
FILE: 3782-016-01

GEOENGINEERS
15055 SW SEQUOIA PKWY
SUITE 140
PORTLAND, OREGON 97224
P: 503/624-9274
F: 503/620-5840

CLARK COUNTY
SUDS CREEK CROSSING
RETAINING WALLS

SUDS CREEK SOUTH WALL
PROFILE

Drawing No.
RWS-3

Sheet
3 of 7

Portland\P:\3\3782016\01\CAD\Ultrablock\FigureRWS3.dwg TNH:MWJ 09/30/04

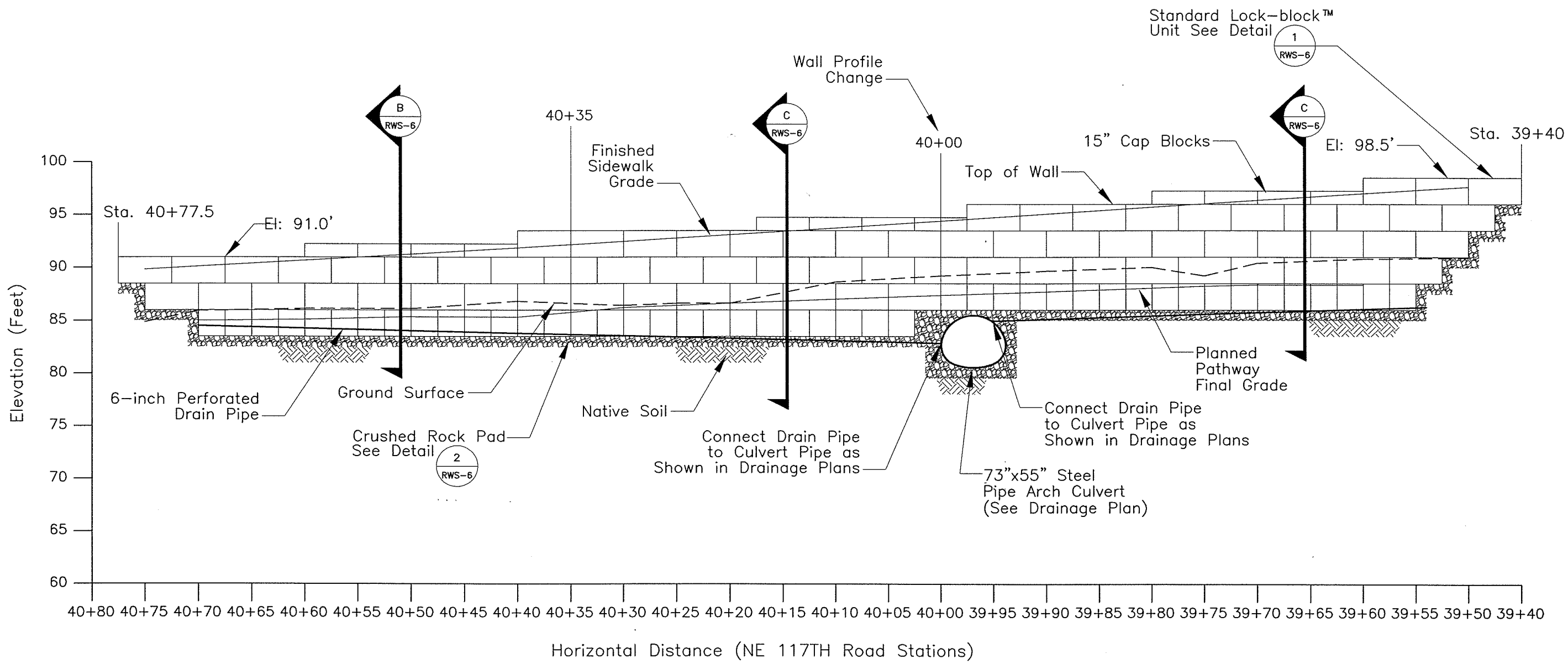

Portland\P:\3\3782016\01\CAD\Ultrablock\FigureRWS4.dwg TNH:MWJ 09/30/04

99% DESIGN PLANS

Revision	Description	Date	By	Chk	Rev
0	50% design plans.	7/16/04	MWJ	TNH	TWB
1	99% design plans.	9/30/04	MWJ	TNH	TWB

DESIGNED: TNH
DRAWN: MWJ
CHECKED: TWB
SCALE: NA
DATE: 07/16/04
FILE: 3782-016-01

GEOENGINEERS
15055 SW SEQUOIA PKWY
SUITE 140
PORTLAND, OREGON 97224
P: 503/624-9274
F: 503/620-5840

CLARK COUNTY
SUDS CREEK CROSSING
RETAINING WALLS

SUDS CREEK NORTH WALL PROFILE

Drawing No. **RWS-4**

Sheet *4 of 7*

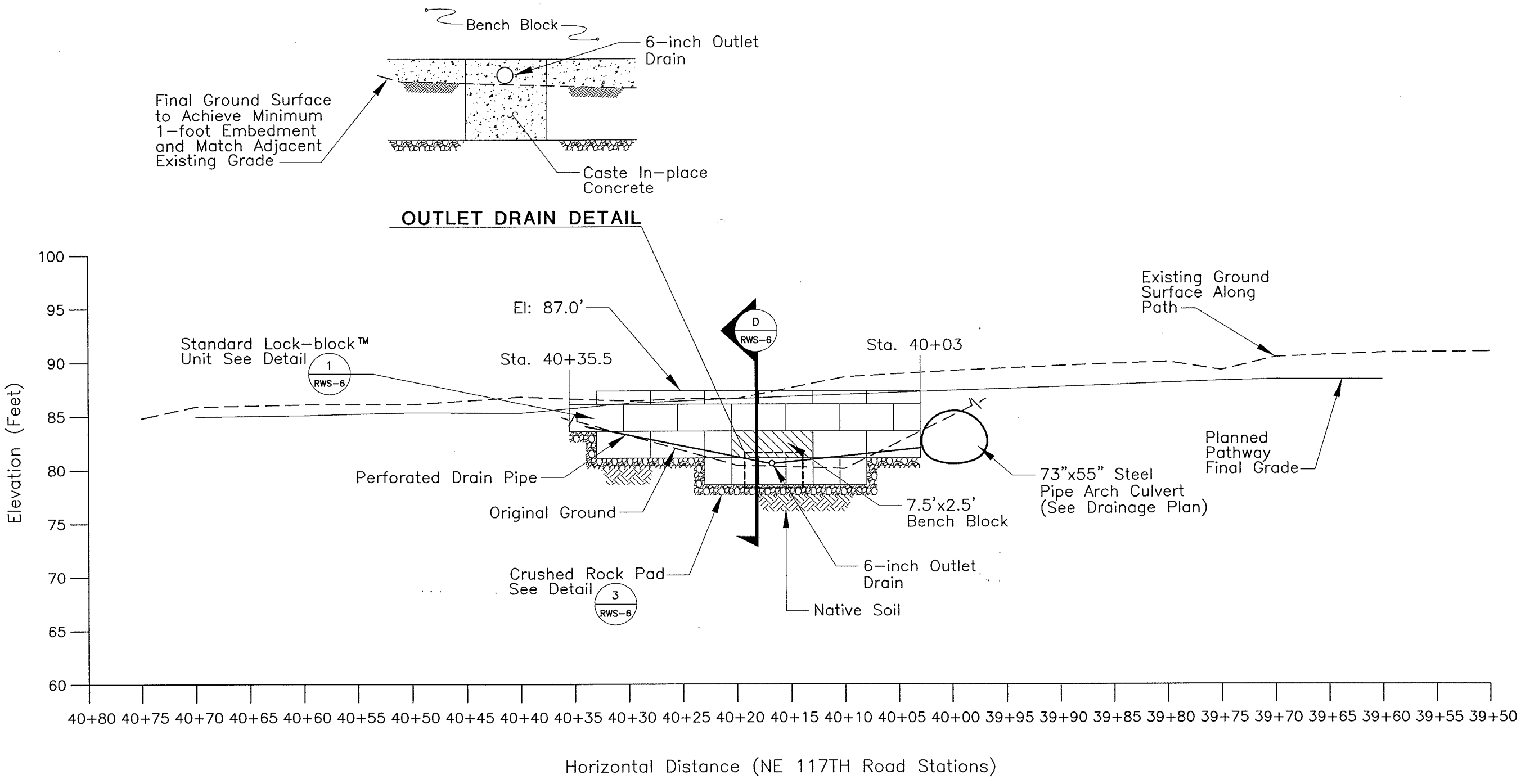

99% DESIGN PLANS

Revision	Description	Date	By	Chk	Rev
0	50% design plans.	7/16/04	MWJ	TNH	TWB
1	99% design plans.	9/30/04	MWJ	TNH	TWB

DESIGNED: TNH
DRAWN: MWJ
CHECKED: TWB
SCALE: NA
DATE: 07/16/04
FILE: 3782-016-01

GEOENGINEERS
15055 SW SEQUOIA PKWY
SUITE 140
PORTLAND, OREGON 97224
P: 503/624-9274
F: 503/620-5940

CLARK COUNTY
SUDS CREEK CROSSING RETAINING WALLS

SUDS CREEK PATH WALL PROFILE

Drawing No. **RWS-5**

Sheet 5 of 7

Portland\P:\3\3782016\01\CAD\Ultrablock\FigureRWS5.dwg TNH:MWJ 09/30/04

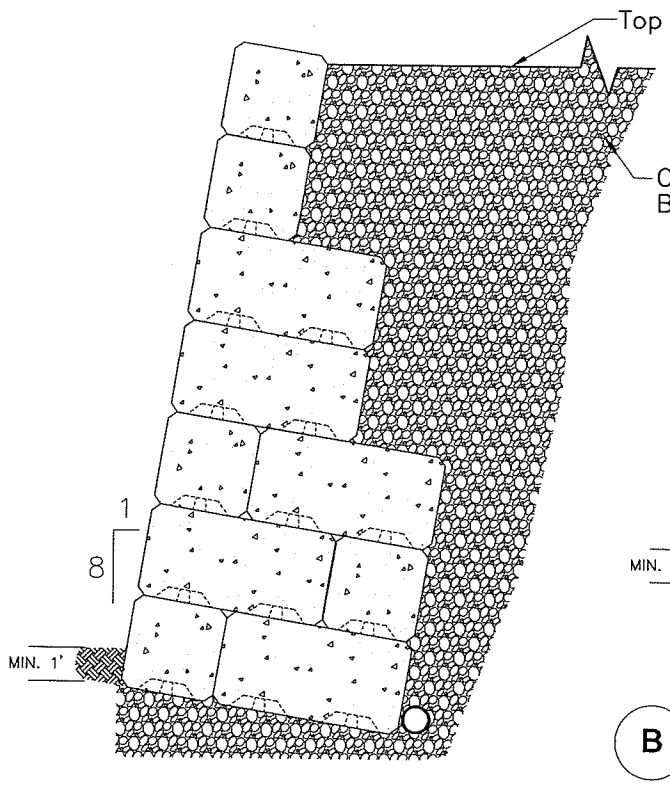

A SOUTH WALL SECTION
1" = 5'

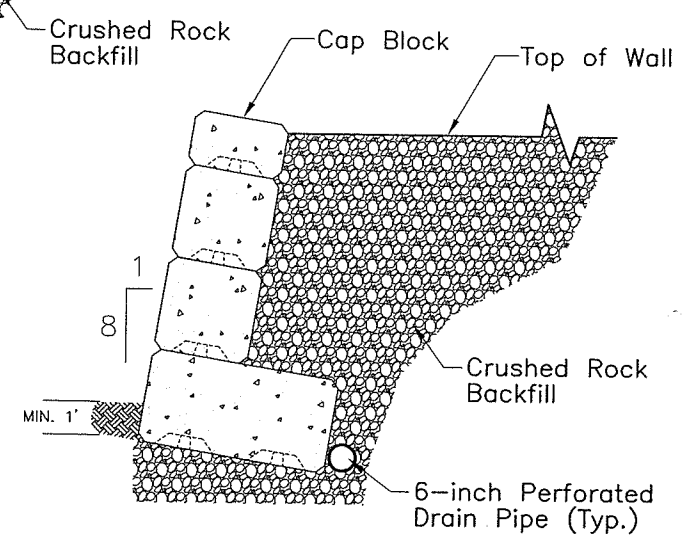

B NORTH WALL SECTION
1" = 5'

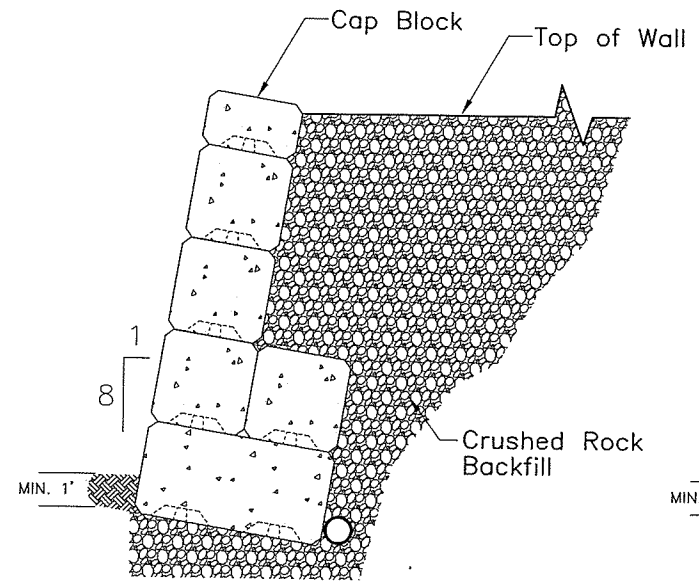

C NORTH WALL SECTION
1" = 5'

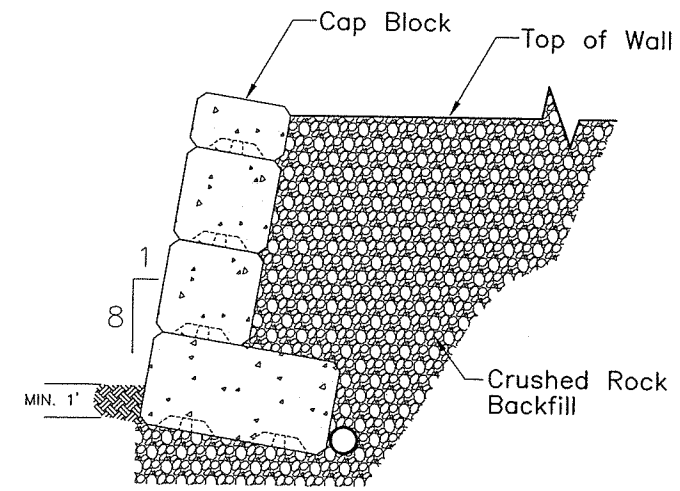

D PATH WALL
1" = 5'

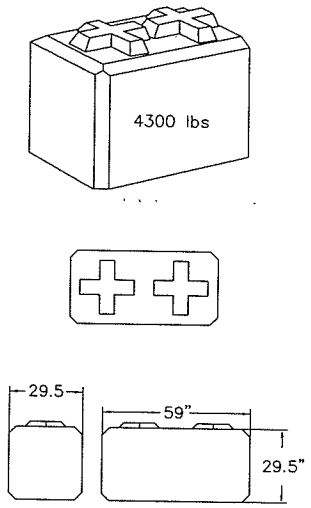

1 FULL BLOCK DETAIL
NTS

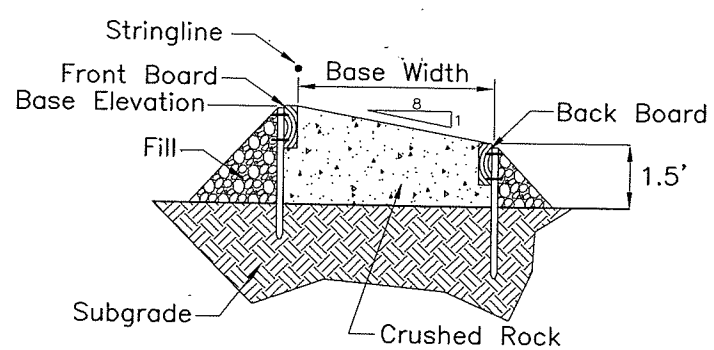

2 BASE PAD DETAIL
NTS

99% DESIGN PLANS

Revision	Description	Date	By	Chk	Rev
0	50% design plans.	7/16/04	MWJ	TNH	TWB
1	99% design plans.	9/30/04	MWJ	TNH	TWB

DESIGNED: TNH
DRAWN: MWJ
CHECKED: TWB
SCALE: NA
DATE: 07/16/04
FILE: 3782-016-01

GEOENGINEERS
15055 SW SEQUOIA PKWY
SUITE 140
PORTLAND, OREGON 97224
P: 503/624-9274
F: 503/620-5840

CLARK COUNTY
SUDS CREEK CROSSING
RETAINING WALLS

ULTRABLOCK WALL TYICAL
SECTIONS AND DETAILS

Drawing No.
RWS-6

Sheet
6 of 7

Portland\P:\3\3782016\01\CAD\Ultrablock\FigureRWS5.dwg TNH:MWJ 09/30/04

GENERAL

The contractor shall furnish and install a concrete segmental block retaining wall consisting of Lock-Block ™ modular block components to fit the lines and grades designated on the plans and specifications. Install as follows and per manufacturers specifications.

MATERIALS

Concrete Segmented Blocks

The standard Block-Block™ shall weigh at least 4,000 pounds (lbs) and measure 29.5" x 29.5"x59" long. Blocks shall be of the interlocking design, with one homogeneous pour having one long and one short face without blemishes or chips. Blocks shall have 3" chamfered edges designed to provide 8 square inches (si) of drainage area per block.

Lock-Block ™ shall be designed with two cross keyways equidistant from the ends and sides to provide maximum shear capacity. The blocks have a male/female key combination that allows the blocks to be locked parallel or perpendicular to each other. Keyways shall have a +1/2" tolerance for each installation.

Blocks shall be manufactured with a plain smooth concrete finish, a Quarrystone architectural finish or a Cutstone architectural finish as provided by Ultrablocks, Inc.

Each Lock-Block™ shall be furnished with a 7 strand steel (270 KPa) loop lifting eye located in the center of the standard block between the two crossed keyways as manufactured by Ultrablock, Inc. Steel rebar is unacceptable as a lifting eye.

Fill Soils

Fill material shall consist of crushed surfacing base course conforming to Section 9-03.9(3) of the Washington State Department of Transportation Specifications (2004). Fill material shall be approved by the engineer.

Fill containing brush, sod, peat, roots or other organic, perishable or deleterious matter, including, but not limited to snow, ice or frozen soils, shall be considered unsuitable material and shall be replaced.

EXECUTION

Site Preparation

Remove topsoil, brush, sod or other organic or deleterious materials prior to construction of the ultrablock retaining wall. Prior to placing leveling pad, notify engineer to observe foundation subgrade soils. Over-excavate and replace soft areas as directed by the engineer.

Base Preparation

Construct wall base pad as shown in drawings, starting at lowest wall level.

Set elevation of backboard to give the specified wall batter of 8(H):1(v).

Compact base material to at least 95% of the maximum dry density determined in accordance with ASTM D 1557.

Drain Installation

Install drain pipe and connect to culvert as shown in the drawings.

Drain pipe shall be sloped 2% minimum to outlet as shown in sheet.

Grade pipe bedding so that pipe is uniformly supported along barrel.

Place a minimum 2 foot lift of backfill above pipe prior to compacting backfill.

Fill Placement and Compaction

Place fill in horizontal layers not exceeding 12 inches in uncompacted thickness for heavy compaction equipment. For zones where compaction is accomplished with hand operated equipment, fill shall be placed in horizontal layers not exceeding 6 inches in uncompacted thickness.

Compact fill and wall base material to at least 95% of the maximum density determined in accordance with ASTM D 1557 (modified Proctor Density).

Allow engineer to observe fill placement and perform compaction testing. Do not cover fill with new lift until previous lift is approved.

Maintain wall alignment at all times during construction.

DRAINAGE

Backfill shall be graded away from the wall face and rolled at the end of each work day to prevent ponding of water on surface of the fill.

Permanent surface water diversion, drainage and site grading are shown in the site grading plan for the project. Coordinate wall construction adjacent to or including drainage improvements and water diversion improvements with the other contractors and the site engineer.

99% DESIGN PLANS

Revision	Description	Date	By	Chk	Rev
0	50% design plans.	7/16/04	MWJ	TNH	TWB
1	99% design plans.	9/30/04	MWJ	TNH	TWB

DESIGNED: TNH SCALE: NA
DRAWN: MWJ DATE: 07/16/04
CHECKED: TWB FILE: 3782-016-01

GEOENGINEERS
15055 SW SEQUOIA PKWY
SUITE 140
PORTLAND, OREGON 97224
P: 503/624-9274
F: 503/620-5940

CLARK COUNTY
SUDS CREEK CROSSING
RETAINING WALLS

CONSTRUCTION NOTES

Drawing No. RWS-7

Sheet 7 of 7

Portland\P:\3\3782016\01\CAD\Ultrablock\FigureRWS-7.dwg TNH:MWJ 09/30/04