CAPITAL IMPROVEMENTS PROGRAM

COUNTY ROAD PROJECT # 321222

BETTS BRIDGE #26 REPLACEMENT (SALMON CREEK AVE.)

PLANS FOR THE CONSTRUCTION OF

BRIDGE, ROADWAY, RETAINING WALLS, AND STORM DRAINAGE

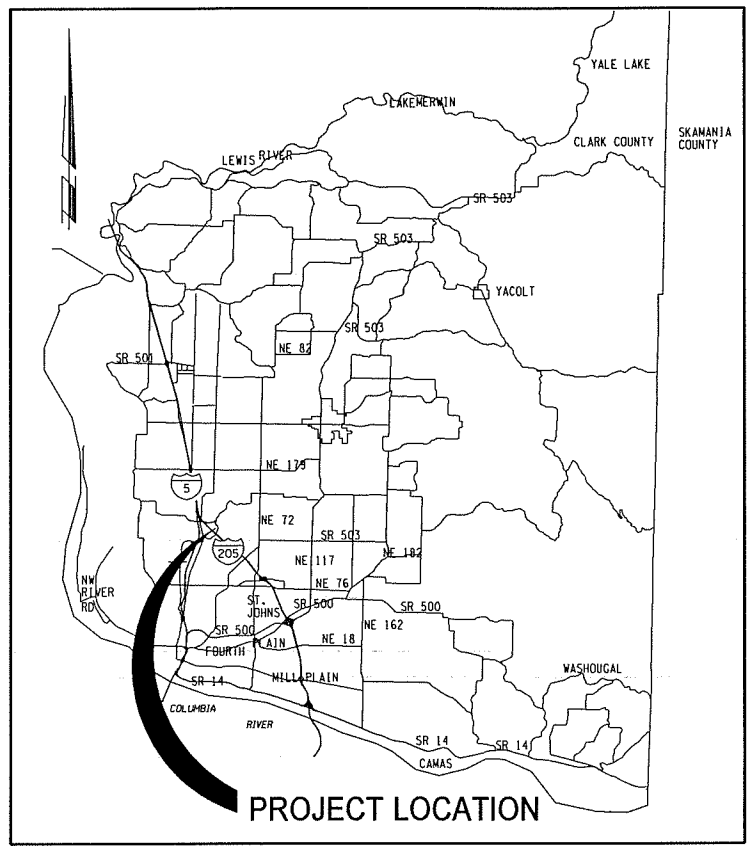

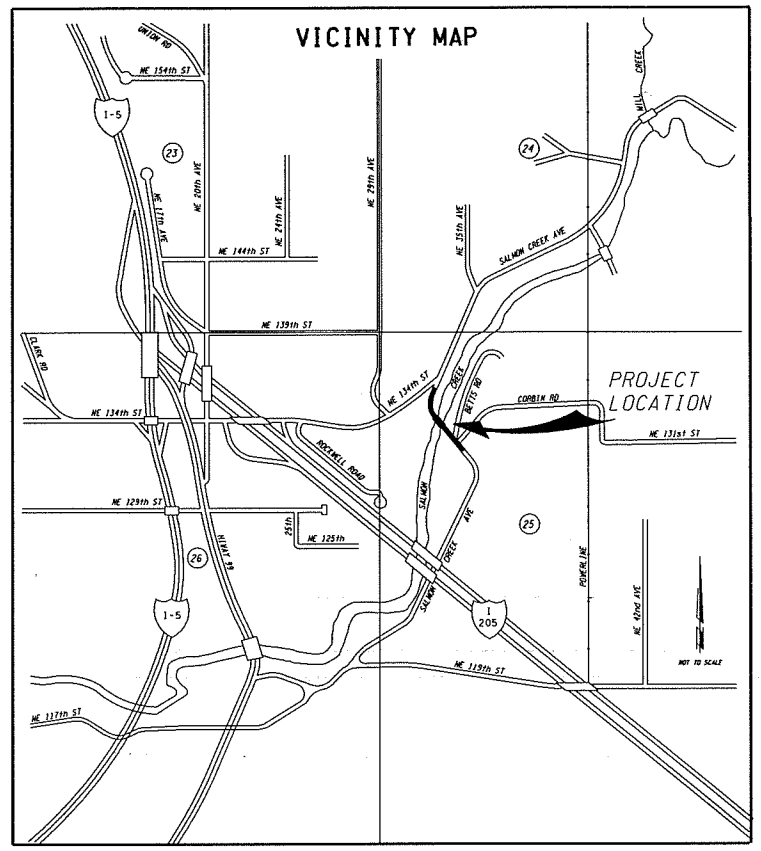

INDEX OF SHEETS

1	CV	COVER SHEET
2	SQ	SUMMARY OF QUANTITIES AND LEGEND
3	TS1	TYPICAL SECTIONS
4	TS2	TYPICAL SECTIONS
5	TS3	TYPICAL SECTIONS
6	TS4	TYPICAL SECTIONS
7	TS5	TYPICAL SECTIONS
8	TS6	TYPICAL SECTIONS
9	HV1	HORIZONTAL AND VERTICAL CONTROL
10	EC1	EROSION AND SEDIMENT CONTROL PLAN (51+80 TO 60+00)
11	EC2	EROSION AND SEDIMENT CONTROL PLAN (60+00 TO 67+25)
12	EC3	EROSION AND SEDIMENT CONTROL PLAN FOR WATER QUALITY AND STORMWATER MANAGEMENT FACILITIES
13	EC4	EROSION CONTROL DETAILS - SHEET 1
14	EC5	EROSION CONTROL DETAILS - SHEET 2
15	RD1	DRIVEWAY DETAILS
16	RD2	RAMP DETAILS
17	RD3	CURB & SIDEWALK DETAILS
18	RD4	MISCELLANEOUS DETAILS
19	WD1	WALL DETAILS
20	WD2	WALL DETAILS
21	WD3	SEW PEDESTRIAN BARRIER DETAIL
22	WP1	WALL PROFILE
23	WP2	WALL PROFILE
24	WP3	WALL PROFILE
25	WP4	WALL PROFILE
26	WP5	WALL PROFILE
27	WP6	WALL PROFILE
28	WP7	WALL PROFILE
29	WP8	WALL PROFILE
30	PP1	PLAN & PROFILE SALMON CREEK AVENUE (54+20 TO 58+40)
31	PP2	PLAN & PROFILE SALMON CREEK AVENUE (58+40 TO 62+70)
32	PP3	PLAN & PROFILE SALMON CREEK AVENUE (62+70 TO 67+25)
33	PP4	PLAN & PROFILE CORBIN ROAD (STA 10+00 TO 10+60)
34	PP5	PLAN & PROFILE BETTS ROAD (STA 10+00 TO 10+95)
35	PP6	PLAN & PROFILE PRIVATE DRIVEWAY A
36	PP7	PLAN & PROFILE PRIVATE DRIVEWAY B
37	PP8	PLAN & PROFILE PRIVATE DRIVEWAY B
38	PP9	PLAN & PROFILE WATERS EDGE CONDOMINIUMS
39	PP10	PLAN & PROFILE BIOSWALE MAINTENANCE ROAD
40	PP11	PLAN & PROFILE POND ACCESS ROAD
41	SD1	STORMWATER PLAN & PROFILE (51+80 TO 55+50)
42	SD2	STORMWATER PLAN & PROFILE (55+50 TO 60+00)
43	SD3	STORMWATER PLAN & PROFILE (60+00 TO 63+25)
44	SD4	STORMWATER PLAN & PROFILE (63+50 TO 67+25)
45	SD5	STORMWATER DETAILS - SHEET 1
46	SD6	STORMWATER DETAILS - SHEET 2
47	SD7	STORMWATER DETAILS - SHEET 3
48	WQ1	WATER QUALITY AND STORMWATER MANAGEMENT FACILITIES
49	WQ2	WATER QUALITY FACILITY DETAILS
50	EN1	BANK RESTORATION & STABILIZATION PLAN
51	BR2	BANK RESTORATION & STABILIZATION DETAILS
52	LS1	SOUTH STORMWATER POND - PLANTING PLAN
53	LS2	NORTH STORMWATER SWALE - PLANTING PLAN
54	LS3	PLANTING DETAILS
55	LS4	PLANTING DETAILS
56	INT1	INTERSECTION PLAN CORBIN ROAD
57	INT2	INTERSECTION PLAN BETTS ROAD
58	ST1	SIGNING AND STRIPING PLAN
59	ST2	SIGNING AND STRIPING PLAN
60	ST3	SIGNING AND STRIPING PLAN
		SEWER TRUNK LINE
61	G-2	GENERAL SYMBOLS
62	G-3	GENERAL ABBREVIATIONS
63	G-4	GENERAL NOTES AND KEY MAP
64	C-101	SEWER TRUNK LINE STA 53+20 TO STA 57+30
65	C-102	SEWER TRUNK LINE STA 57+30 TO STA 60+80 (SALMON CREEK)
66	C-103	SEWER TRUNK LINE STA 60+80 TO STA 65+00 (SALMON CREEK)
67	C-104	MANHOLE DETAILS
68	C-105	TRENCH/PIPELINE DETAILS
		WATER LINE
69		WATER MAIN REPLACEMENT
70		WATER MAIN REPLACEMENT
71		WATER MAIN REPLACEMENT DETAILS
		BRIDGE PLANS
72	1	LAYOUT
73	2	GENERAL NOTES
74	3	FOUNDATION LAYOUT
75	4	CONSTRUCTION SEQUENCE
76	5	SHAFT AT PIERS 1 AND 2
77	6	PIER 1 PLAN
78	7	PIER 1 ELEVATION
79	8	PIER 1 AND 2 SECTION
80	9	PIER 2 PLAN
81	10	PIER 2 ELEVATION
82	11	CURTAIN WALL DETAILS 1 OF 2
83	12	CURTAIN WALL DETAILS 2 OF 2
84	13	BEARING DETAILS
85	14	FRAMING PLAN
86	15	TYPICAL ROADWAY SECTION
87	16	WF58G GIRDER DETAILS 1 OF 3
88	17	WF58G GIRDER DETAILS 2 OF 3
89	18	WF58G GIRDER DETAILS 3 OF 3
90	19	WF58G END DIAPHRAGM ON GIRDER DETAILS
91	20	WF58G INTERMEDIATE DIAPHRAGM DETAILS
92	21	TYPICAL ROADWAY REINFORCING
93	22	SLAB REINFORCING
94	23	PEDESTRIAN BARRIER DETAILS 1 OF 3
95	24	PEDESTRIAN BARRIER DETAILS 2 OF 3
96	25	PEDESTRIAN BARRIER DETAILS 3 OF 3
97	26	BRIDGE RAILING TYPE XX DETAILS 1 OF 2
98	27	BRIDGE RAILING TYPE XX DETAILS 2 OF 2
99	28	BRIDGE APPROACH SLAB DETAILS 1 OF 2
100	29	BRIDGE APPROACH SLAB DETAILS 2 OF 2
101	30	ARCHITECTURAL DETAILS 1 OF 2
102	31	ARCHITECTURAL DETAILS 2 OF 2
103	32	UTILITY SUPPORTS DETAILS 1 OF 2
104	33	UTILITY SUPPORTS DETAILS 2 OF 2
105	34	BARLIST

90% PLANS
PRELIMINARY

COMMISSIONERS:

BETTY SUE MORRIS, Chair

JUDIE STANTON, Commissioner

CRAIG PRIDEMORE, Commissioner

proud past, promising future

CLARK COUNTY WASHINGTON

DEPARTMENT OF PUBLIC WORKS

DESIGN AND ENGINEERING DIVISION- DESIGN SECTION

Quality Assurance	Project Manager	Public Works Director/County Engineer
DATE:	DATE: Carolyn Henigers, P.E., P.L.S.	DATE: Peter Capell, P.E.

FEDERAL AID # BRM-4231(004)

FEDERAL CONTRACT # TA-2608

proud past, promising future

CLARK COUNTY WASHINGTON

Recommended for Approval

Grading _____ Erosion _____

Storm Water Plan _____

Development Review Manager Date

PLOT1

90% PRELIMINARY SUMMARY OF QUANTITIES

ITEM NO	BID ITEM IDENT NO	QUANTITY	BID ITEM DESCRIPTION	UNIT
1	109.07	1	MOBILIZATION	L.S.
2	109.10	1	MINOR CHANGE	CALC
			TRAFFIC CONTROL	
3	110.00	400	TRAFFIC CONTROL LABOR	HOUR
4	110.10	200	TRAFFIC CONTROL SUPERVISOR	HOUR
5	110.30	1	TEMPORARY TRAFFIC CONTROL DEVICES	L.S.
6	110.31	2	PORTABLE CHANGEABLE MESSAGE SIGN	EACH
7	110.32	200	OPERATION OF PORTABLE CHANGEABLE MESSAGE SIGN	HOUR
8	110.40	209	CONSTRUCTION SIGNS CLASS "A"	S.F.
			PREPARATION	
9	201.00	1	CLEARING AND GRUBBING	L.S.
10	201.20	1	ROADSIDE CLEANUP	EST
11	202.07	3	REMOVAL OF EXISTING CATCH BASINS/MANHOLES/DRAINAGE STRUCTURES	EACH
12	202.20	2500	REMOVAL OF EXISTING ASPHALT CONC. PAVEMENT	S.Y.
13		1	REMOVING EXISTING BRIDGE - BETTS BRIDGE	L.S.
14	202.51	1	REMOVING OBSTRUCTIONS - FORCE ACCOUNT	EST
			GRADING	
15	203.10	1760	ROADWAY EXCAVATION (INCL HAUL)	C.Y.
16	203.15	1500	STORMWATER FACILITY EXCAVATION (South Basin Pond)	C.Y.
17	203.16	50	STORMWATER FACILITY EXCAVATION (North Basin Bioswale)	C.Y.
18	203.20	960	EMBANKMENT COMPACTION	C.Y.
19	203.30	1660	GRAVEL BORROW (INCL HAUL)	C.Y.
20	207.00	79.3	WATER	MGAL
21	209.12	1400	SHORING OR EXTRA EXCAVATION CL. B	S.F.
22	402.10	300	GRAVEL DRIVEWAY; GRAVEL ACCESS RD; GRAVEL APPROACH	S.Y.
			SURFACING	
23	404.50	2608	CRUSHED SURFACING BASE COURSE	TON
24		713	SAWCUT EXISTING PAVEMENT	L.F.
			HOT MIX ASPHALT	
25	504.14	577	PLANING BITUMINOUS PAVEMENT	S.Y.
26	504.32	718	HMA CL. 1/2 IN. PG 64-22	TON
27	504.33	806	HMA CL. 3/4 IN. PG 64-22	TON
28	504.41	92	HMA FOR APPROACH CL. 1/2 IN. PG 64-22	TON
			STRUCTURES	
29		746	STRUCTURE EXCAVATION CLASS A INCL. HAUL	C.Y.
30		1	SHORING OR EXTRA EXCAVATION CL. A	L.S.
31		173	SOIL EXCAVATION FOR SHAFT INCL. HAUL	C.Y.
32		112	FURNISHING PERMANENT CASING FOR 4 FOOT DIAM. SHAFT	L.F.
33		8	PLACING PERMANENT CASING FOR 4 FOOT DIAM. SHAFT	EACH
34		280	FURNISHING & PLACING TEMP. CASING FOR 4 FOOT DIAM. SHAFT	L.F.
35		1	SHORING OR EXTRA EXCAVATION CL. A - FOR 4 FOOT DIAM. SHAFT	L.S.
36		182.0	CONC. CLASS 4000P FOR SHAFT	C.Y.
37		43200	ST. REINF. BAR FOR SHAFT	LB.
38		1568	CSL ACCESS TUBE	L.F.
39		1	REMOVING OBSTRUCTIONS - FORCE ACCOUNT	EST
40		33000	ST. REINF. BAR FOR BRIDGE	LB.
41		1	DEFICIENT STRENGTH CONC. PRICE ADJUSTMENT	CALC
42		1	SUPERSTRUCTURE - BETTS BRIDGE REPLACEMENT	L.S.
43		96	LEAN CONCRETE	C.Y.
44		200	CONC. CLASS 4000 FOR BRIDGE	C.Y.
45		366	TRAFFIC BARRIER	L.F.
46	505.05	378.0	BRIDGE APPROACH SLAB	S.Y.
47	602.34	4170	STRUCTURAL EARTH WALL	S.F.
48	604.01	4	ELWd STRUCTURE - MODEL 12S	EACH
49	604.02	3	ELWd STRUCTURE - MODEL 20N	EACH
50	604.03	24	SALVAGED LOGS	EACH
51		486	SEW PEDESTRIAN BARRIER	L.F.
52		486	PEDESTRIAN HANDRAIL	L.F.
53	612.51	225	MODULAR / SEGMENTAL BLOCK RETAINING WALL	S.F.
			DRAINAGE STRUCTURES, STORM SEWER, UTILITIES	
54	704.10	492	STORM SEWER PIPE, 10 IN. DIAM.	L.F.
55	704.12	286	STORM SEWER PIPE, 12 IN. DIAM.	L.F.
56	704.15	222	STORM SEWER PIPE, 15 IN. DIAM.	L.F.
57	704.18	445	STORM SEWER PIPE, 18 IN. DIAM.	L.F.
58	704.24	202	STORM SEWER PIPE, 24 IN. DIAM.	L.F.
59	705.00	2	MANHOLE TYPE 1 IN. DIAM. OVER EXISTING SEWER LINE	EACH
60	705.01	12	MANHOLE 48 IN. DIAM. TYPE 1	EACH
61	705.23	1	MANHOLE 60 IN. DIAM. TYPE 1 WITH BY-PASS	EACH
62	705.24	1	MANHOLE 60 IN. DIAM. TYPE 3 WITH FLOW CONTROL	EACH
63	705.63	13	CONCRETE COMBINATION CURB INLET	EACH
64	705.64	4	DITCH INLET	EACH
			EROSION CONTROL AND PLANTING	
65	705.72	1	BIOSWALE SEDIMENTATION TRAP	EACH
66	705.86	1	CONNECTION TO DRAINAGE STRUCTURE	EACH
67	705.87	1	BIOSWALE OUTFALL	EACH
68	705.88	2	STORMDRAIN OUTFALL	EACH
69	708.03	2	PLUGGING EXISTING PIPE	EACH
			OTHER	
70	709.00	10	ADJUST WATER/GAS VALVE RIM, COVER, AND FRAME	EACH
71	714.02	1	MOVING EXISTING HYDRANT	EACH
72	715.09	3	RELOCATE WATER METER BOX AND SERVICE	EACH
73	801.20	20	ESC LEAD	DAY
74	801.22	750	COIR EROSION CONTROL BLANKET	S.Y.
75	801.26	50	PLASTIC COVERING	S.Y.
76	801.40	2	STABILIZED CONSTRUCTION ENTRANCE	EACH
77	801.41	1	TIRE WASH	EACH
78	801.50	20	INLET PROTECTION	EACH
79	801.51	2600	SILT FENCE	L.F.
80	801.52	862	WATTLE	L.F.

90% PRELIMINARY SUMMARY OF QUANTITIES (CONT.)

ITEM NO	BID ITEM IDENT NO	QUANTITY	BID ITEM DESCRIPTION	UNIT
81	801.57	1	SPCC PLAN	L.S.
82	801.58	2	TEMPORARY SEEDING	ACRE
83	802.11	31	PSIPE - CONIFER TREE, 4'-6' (Sequoia, Douglas Fir)	EACH
84	802.31	158	PSIPE - SMALL DECIDUOUS TREE, 4'-6' (all other - mid-price)	EACH
85	802.40	128	PSIPE -SHRUB, EVERGREEN, 1 GAL. (Oregon Grape)	EACH
86	802.51	515	PSIPE -SHRUB, DECIDUOUS, 2 OR 3 GAL	EACH
87	802.74	1	PLANT ESTABLISHMENT - SECOND YEAR (FORCE ACCOUNT)	EST
88	802.80	300	COMPOST	C.Y.
89	802.85	1	NOXIOUS WEED CONTROL - FORCE ACCOUNT	EST
90	802.86	425	BARK MULCH	C.Y.
91	802.89	1.2	SEEDING AND MULCHING	ACRE
92	802.98	500	SOD INSTALLATION	S.Y.
93	804.00	276	CEMENT CONC. TRAFFIC CURB	L.F.
94	804.01	1959	CEMENT CONC. TRAFFIC CURB AND GUTTER	L.F.
95	806.00	74	CEMENT CONCRETE APPROACH, 3 DAY	S.Y.
96	811.20	334	REMOVING BEAM GUARDRAIL	L.F.
97	811.22	8	REMOVING BEAM GUARDRAIL ANCHOR	EACH
98		367	FENCE RELOCATION	L.F.
99	812.10	300	CHAIN LINK FENCE - TYPE 1	L.F.
100	812.19	2	DOUBLE 14.FT. CHAIN LINK GATE	EACH
101	813.00	5	MONUMENT CASE AND COVER	EACH
102	814.01	1059	CEMENT CONC. SIDEWALK	S.Y.
103	815.52	150	FISH COBBLE MIX	C.Y.
104	815.55	6	FISH ROCK	EACH
105	815.57	150	STREAMBANK SOIL MIX	C.Y.
106	818.00	1	MAILBOX SUPPORT, TYPE 1	EACH
107	818.20	3	MAILBOX SUPPORT, TYPE 2	EACH

ABBREVIATIONS

ACP	=	ASPHALT CONC. PAVEMENT
B.V.C.	=	BEGIN VERTICAL CURVE
CB	=	CATCH BASIN
CEM	=	CEMENT
CL	=	CENTER LINE
CONC	=	CONCRETE
C.Y.	=	CUBIC YARD
ELEV	=	ELEVATION
EXIST	=	EXISTING
EOP	=	EDGE OF PAVEMENT
EVC	=	END VERTICAL CURVE
FG	=	FIELD GRADE
FT	=	FOOT
LT	=	LEFT
MIN	=	MINIMUM
MH	=	MANHOLE
PED	=	PEDESTRIAN
PT	=	POINT OF TANGENCY
PC	=	POINT OF CURVATURE
PCCP	=	PORTLAND CEMENT CONCRETE PAVEMENT
PVT	=	PAVEMENT
RDWY	=	ROADWAY
ROW	=	RIGHT - OF - WAY
RT	=	RIGHT
SEW	=	STRUCTURAL EARTH WALL
SHT	=	SHEET
STA	=	STATION
STD	=	STANDARD
SW	=	SIDEWALK
TYP	=	TYPICAL
VIC	=	VICINITY
VPI	=	VERTICAL POINT OF INTERSECTION
WSDOT	=	WASHINGTON STATE DEPARTMENT OF TRANSPORTATION

LEGEND

- NEW DITCH CENTERLINE
- NEW GUARDRAIL
- NEW RETAINING WALL
- NEW ROW LINE
- NEW EDGE OF PAVEMENT
- NEW CURB LINE (FACE AND BACK)
- NEW CENTER LINE
- NEW FENCE LINE
- NEW STORM DRAIN OR CULVERT
- FILL — FILL — NEW FILL LIMITS
- CUT — CUT — NEW CUT LIMITS
- SAW — SAW — SAWCUT LINE
- PERMANENT SLOPE EASEMENT
- NEW SILT FENCE
- EXISTING RETAINING WALL
- EXISTING EDGE OF PAVEMENT
- EXISTING CENTER LINE
- EXISTING FENCE LINE
- EXISTING TELEPHONE LINE
- EXISTING WATER LINE
- EXISTING UNDERGROUND ELECTRIC
- EXISTING SANITARY SEWER LINE
- EXISTING STORM DRAINAGE
- EXISTING GAS LINE
- EXISTING OVERHEAD POWER
- EXISTING CULVERT
- EXISTING DITCH CENTER LINE
- EXISTING GUARDRAIL
- EXISTING LANDSCAPING
- EXISTING CONDUIT
- EXISTING ROW LINE

SYMBOLS

- BORE HOLE
- NEW DITCH INLET
- NEW CATCH BASIN
- NEW MANHOLE
- NEW CURB INLET
- NEW COMBINATION CURB INLET
- NEW MAILBOX
- CURVE TABLE
- WATTLE
- EXISTING WELL
- EXISTING BRUSH LINE
- EXISTING HEDGE
- EXISTING SHRUB
- EXISTING CONIFEROUS TREE
- EXISTING DECIDUOUS TREE
- EXISTING MAILBOX
- EXISTING TRANSFORMER
- EXISTING ELECTRIC TOWER
- EXISTING SANITARY MANHOLE
- EXISTING FIRE HYDRANT
- EXISTING CLEANOUT
- EXISTING GAS VALVE
- EXISTING WATER METER
- EXISTING WATER VALVE
- EXISTING TELEPHONE VAULT
- EXISTING TELEVISION BOX
- EXISTING TELEPHONE MANHOLE
- EXISTING TELEPHONE POLE
- EXISTING GUY ANCHOR
- EXISTING POWER POLE
- EXISTING TELEPHONE PEDESTAL
- EXISTING SERVICE POLE
- EXISTING CURB INLET
- EXISTING CATCH BASIN
- EXISTING STORM MANHOLE
- EXISTING MISC MANHOLE
- EXISTING SIGN
- EXISTING SIGNAL POLE
- EXISTING J BOX
- EXISTING LUMINAIRE
- EXISTING SPRINKLER HEAD
- TRAVERSE POINT
- TEST HOLE
- CURB RAMP

FEDERAL AID # BRM-4231(004)

PLOT2

90% PLANS PRELIMINARY

DESIGNED	PW
DRAWN	PW
CRP	321222
HOR.	N/A
VERT.	N/A
DATE	11/04
DWG:	S01
SHEET	2 OF 105

CALL 48 HOURS BEFORE YOU DIG 1-800-553-4344 "It's the Law" NORTHWEST UTILITIES NOTIFICATION CENTER

DESIGN & ENGINEERING DIVISION
DESIGN SECTION

BETTS BRIDGE #26 REPLACEMENT (SALMON CREEK AVE.)
SUMMARY OF QUANTITIES AND LEGEND

proud past, promising future

CLARK COUNTY WASHINGTON

SALMON CREEK AVE. STA 54+20.00 TO 54+28.82

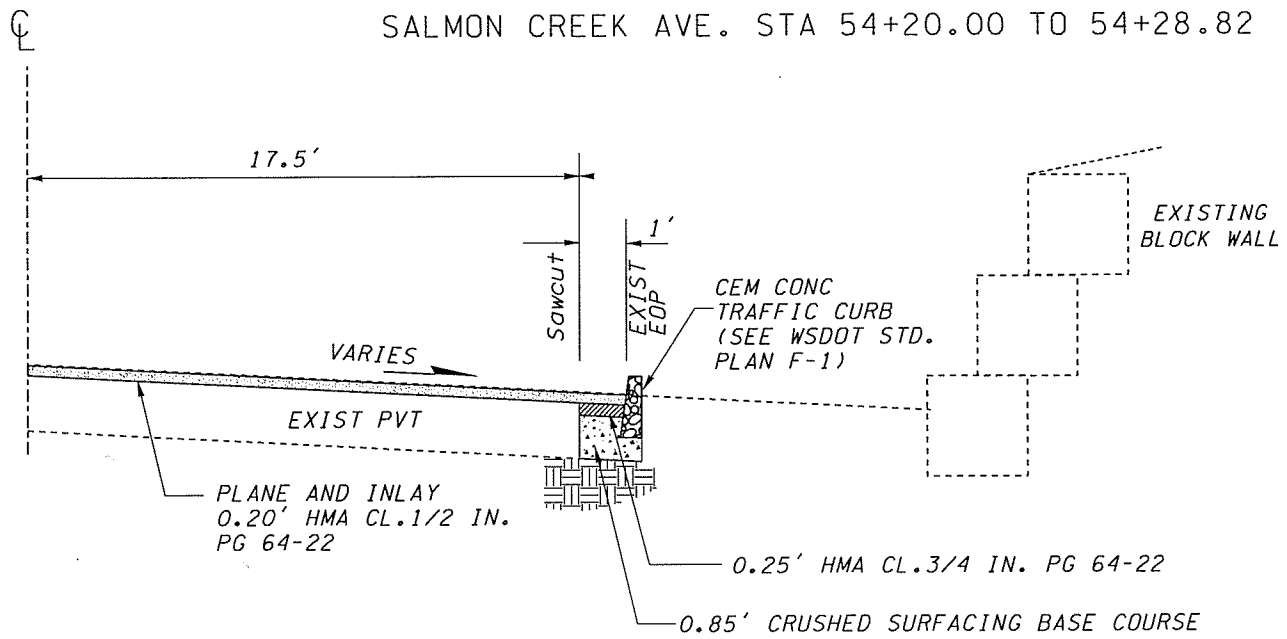

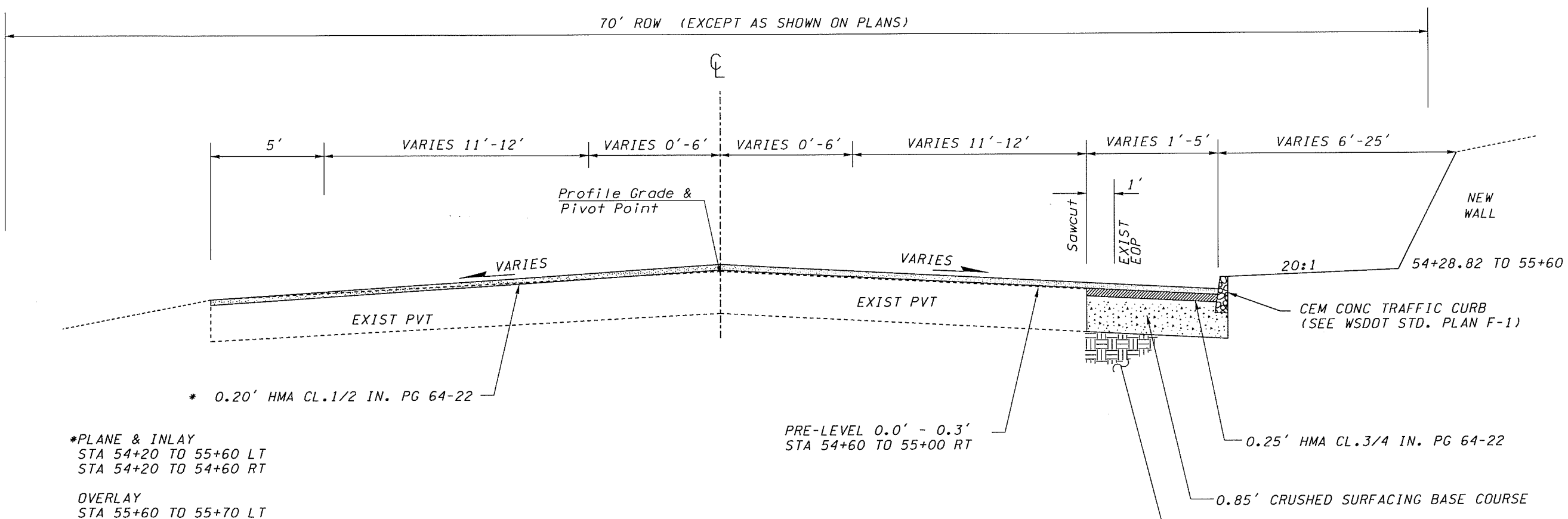

*PLANE & INLAY
STA 54+20 TO 55+60 LT
STA 54+20 TO 54+60 RT

OVERLAY
STA 55+60 TO 55+70 LT

ROADWAY SECTION A

SALMON CREEK AVE. STA 54+20.00 TO 55+70.00 LT
SALMON CREEK AVE. STA 54+20.00 TO 55+00.00 RT

FEDERAL AID # BRM-4231(004)

PLOT3

90% PLANS
PRELIMINARY

DESIGNED	PW
DRAWN	PW
CRP	321222
HOR.	N/A
VERT.	N/A
DATE	11/04
DWG:	TS1
SHEET	3 OF 105

CALL 48 HOURS BEFORE YOU DIG 1-800-553-4344 "It's the Law" NORTHWEST UTILITIES NOTIFICATION CENTER

DESIGN & ENGINEERING DIVISION
DESIGN SECTION

BETTS BRIDGE #26 REPLACEMENT (SALMON CREEK AVE.)
TYPICAL SECTIONS

proud past, promising future
CLARK COUNTY WASHINGTON

SALMON CREEK AVE. STA 56+00.00 TO 57+04.90
SALMON CREEK AVE. STA 57+45.00 TO 58+70.25
SALMON CREEK AVE. STA 60+08.30 TO 60+44.90

NOTE: HEIGHT VARIES, SEE WALL PROFILES SHEETS WP1-WP5

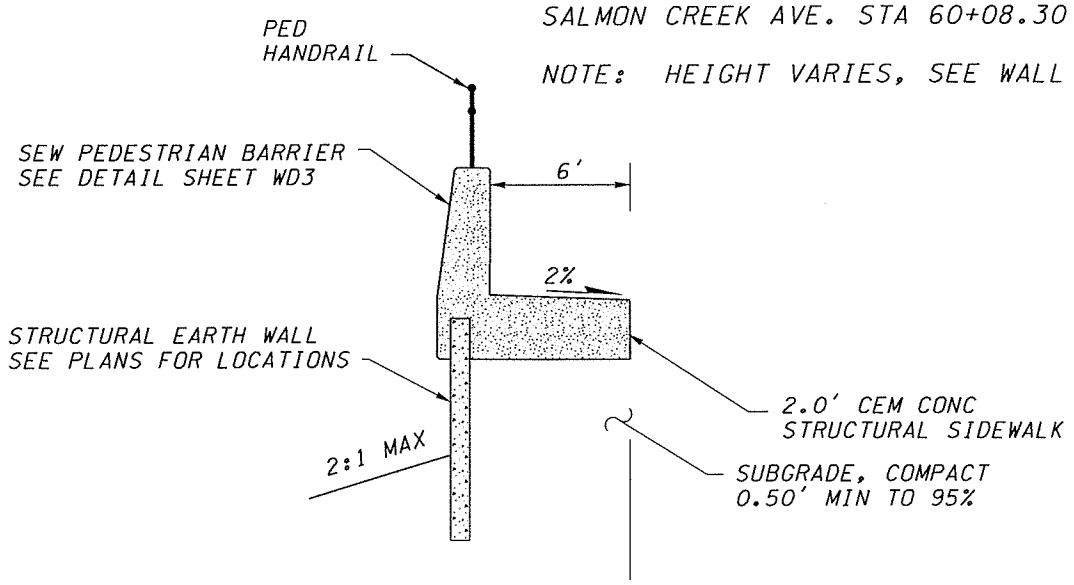

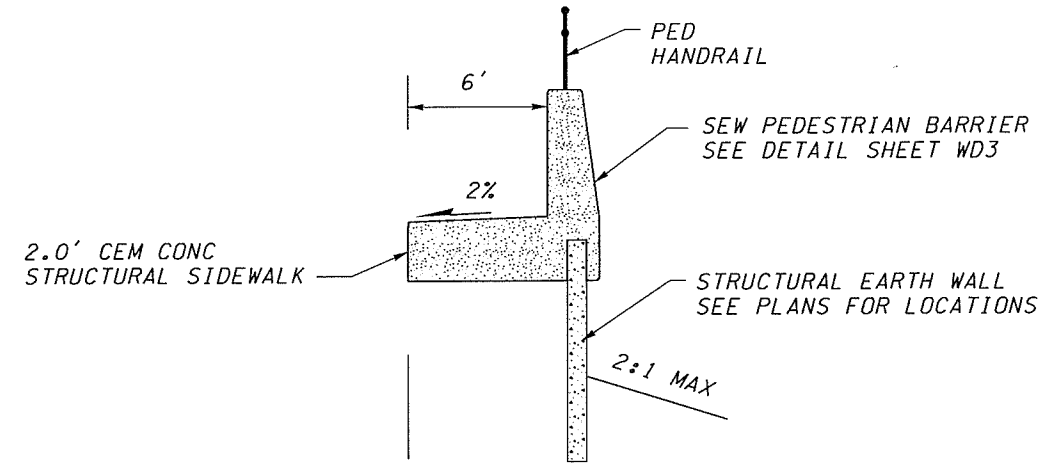

SALMON CREEK AVE. STA 58.23.58 TO 58+91.70
SALMON CREEK AVE. STA 60+30.95 TO 61+82.00

NOTE: HEIGHT VARIES, SEE WALL PROFILES SHEETS WP1-WP5

SALMON CREEK AVE. STA 55+70.00 TO 56+00.00

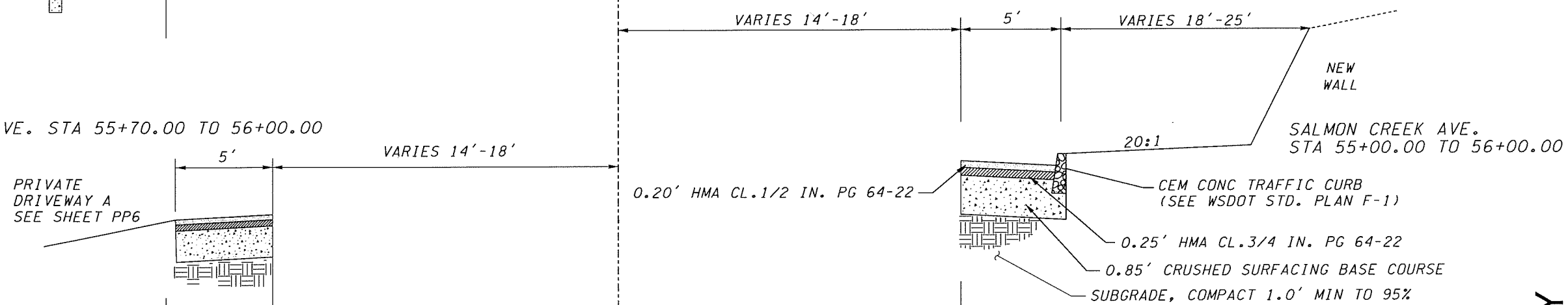

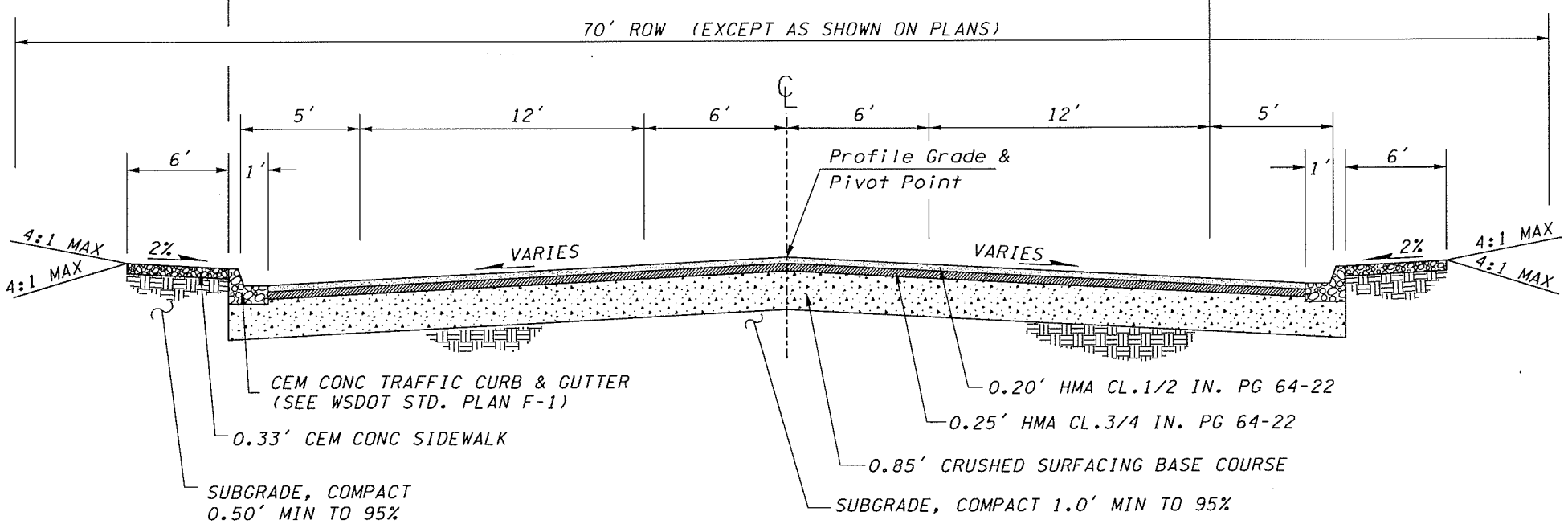

ROADWAY SECTION B

SALMON CREEK AVE. STA 55+70.00 TO 58+58.26 LT.
SALMON CREEK AVE. STA 55+00.00 TO 58+58.26 RT.
SALMON CREEK AVE. STA 60+44.29 TO 63+54.89

FEDERAL AID # BRM-4231(004)

PLOT4

90% PLANS
PRELIMINARY

DESIGNED PW
DRAWN PW
CRP 321222
HOR. N/A
VERT. N/A
DATE 11/04
DWG: TS2
SHEET 4 OF 105

CALL 48 HOURS BEFORE YOU DIG 1-800-553-4344 "It's the Law" NORTHWEST UTILITIES NOTIFICATION CENTER

DESIGN & ENGINEERING DIVISION
DESIGN SECTION

BETTS BRIDGE #26 REPLACEMENT (SALMON CREEK AVE.)
TYPICAL SECTIONS

proud past, promising future
CLARK COUNTY WASHINGTON

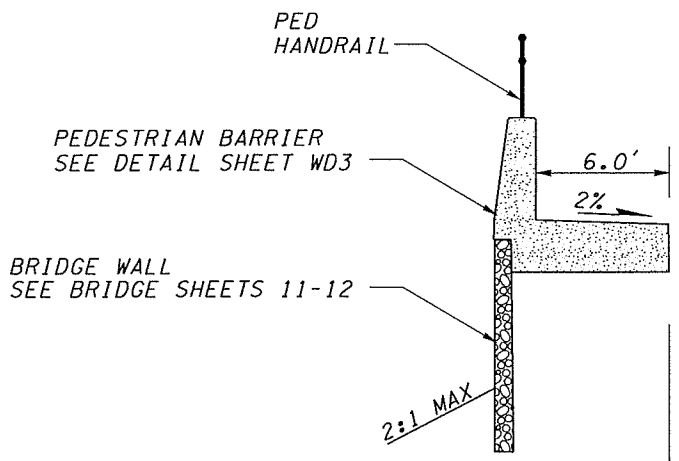

SALMON CREEK AVE. STA 58+66.30 TO 58+70.25
SALMON CREEK AVE. STA 60+04.50 TO 60+08.30

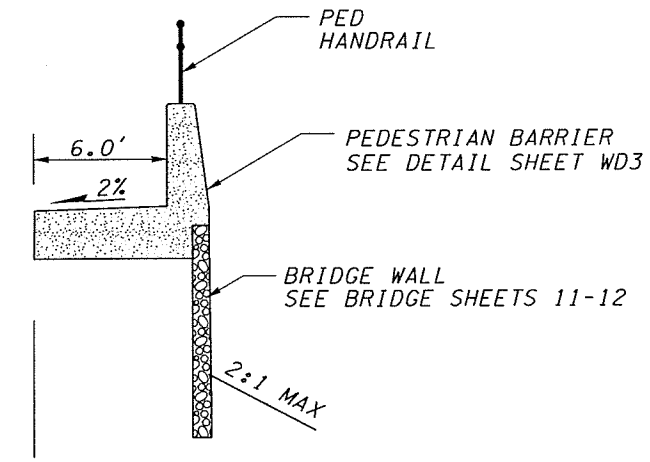

SALMON CREEK AVE. STA 58+91.70 TO 58+95.73
SALMON CREEK AVE. STA 60+26.32 TO 60+30.85

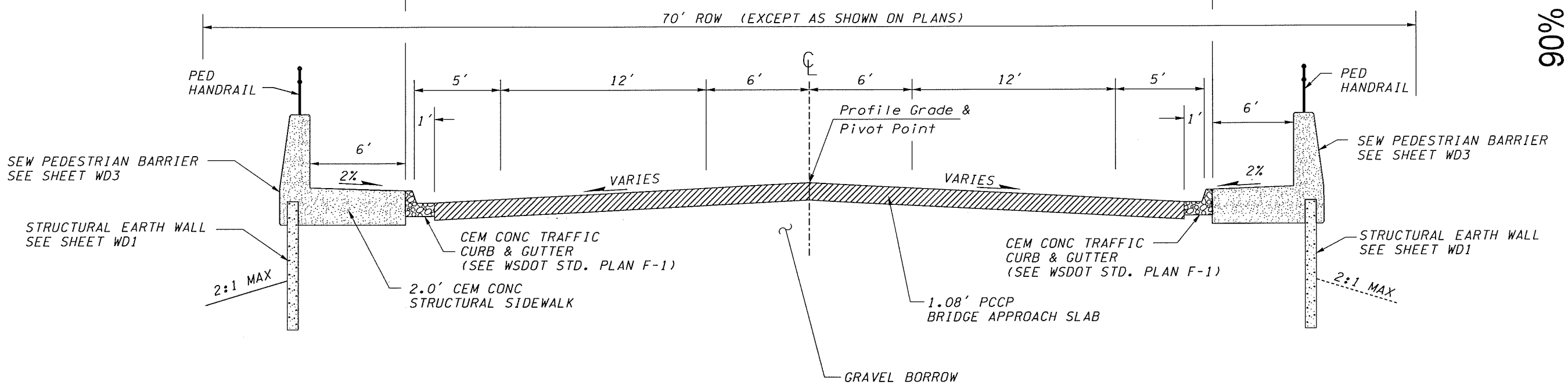

ROADWAY SECTION C

SALMON CREEK AVE. STA 58+58.26 TO 58+85.00
SALMON CREEK AVE. STA 60+15.00 TO 60+44.29

NOTES:
1. SEE BRIDGE SHEETS 28-29 "BRIDGE APPROACH SLAB DETAILS"

FEDERAL AID # BRM-4231(004)

PLOT6

90% PLANS
PRELIMINARY

DESIGNED	PW
DRAWN	PW
CRP	321222
HOR.	N/A
VERT.	N/A
DATE	11/04
DWG:	TS3
SHEET	5 OF 10S

CALL 48 HOURS BEFORE YOU DIG
1-800-553-4344
"It's the Law"
NORTHWEST UTILITIES NOTIFICATION CENTER

DESIGN & ENGINEERING DIVISION
DESIGN SECTION

BETTS BRIDGE #26 REPLACEMENT (SALMON CREEK AVE.)
TYPICAL SECTIONS

proud past, promising future
CLARK COUNTY
WASHINGTON

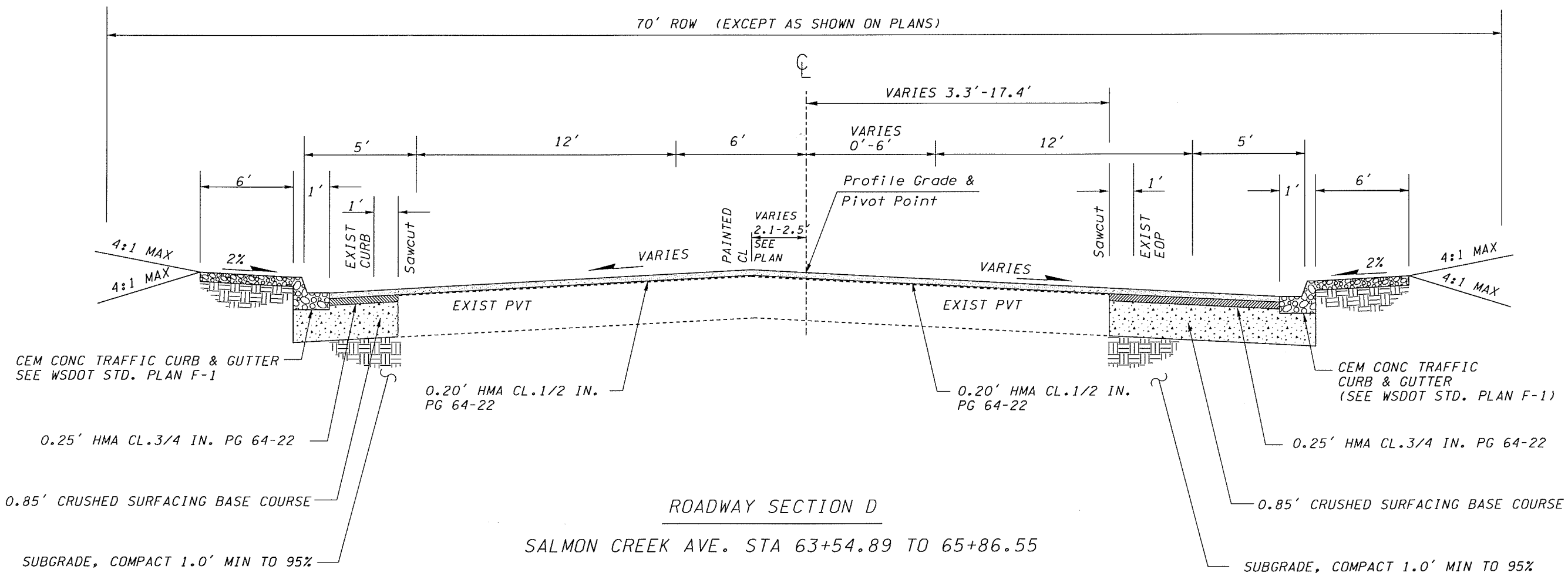

ROADWAY SECTION D

SALMON CREEK AVE. STA 63+54.89 TO 65+86.55

90% PLANS
PRELIMINARY

FEDERAL AID # BRM-4231(004)

PLOT12

DESIGNED	PW
DRAWN	PW
CRP	321222
HOR.	N/A
VERT.	N/A
DATE	11/04
DWG:	TS4
SHEET 6	OF 105

CALL 48 HOURS BEFORE YOU DIG
1-800-553-4344
"It's the Law"
NORTHWEST UTILITIES NOTIFICATION CENTER

DESIGN & ENGINEERING DIVISION
DESIGN SECTION

BETTS BRIDGE #26 REPLACEMENT (SALMON CREEK AVE.)
TYPICAL SECTIONS

proud past, promising future
CLARK COUNTY
WASHINGTON

SALMON CREEK AVE. STA 67+14.55 TO 67+25.55 RT

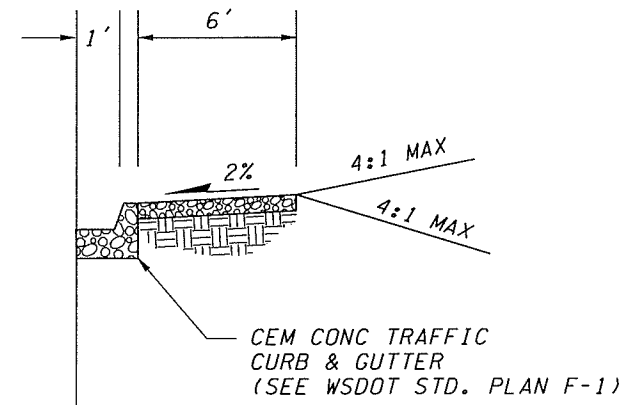

90% PLANS
PRELIMINARY

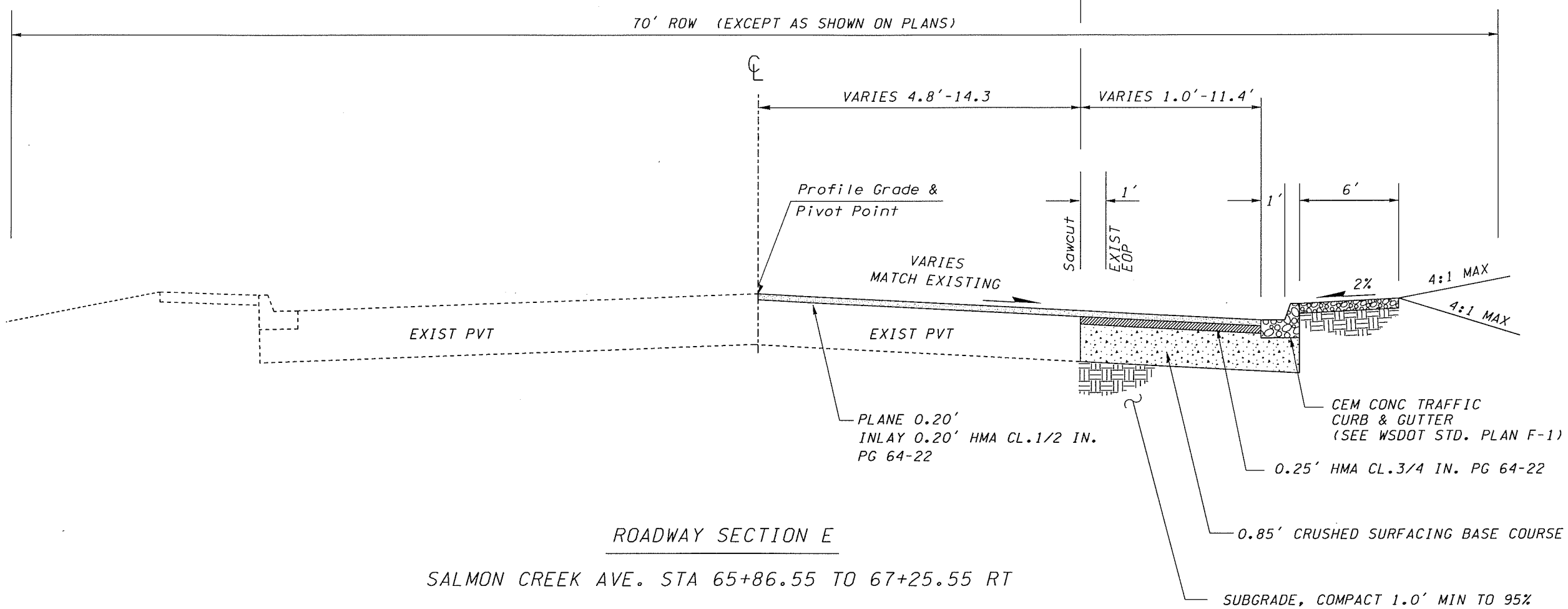

ROADWAY SECTION E

SALMON CREEK AVE. STA 65+86.55 TO 67+25.55 RT

FEDERAL AID # BRM-4231(004)

PLOT5

DESIGNED	PW
DRAWN	PW
CRP	321222
HOR.	N/A
VERT.	N/A
DATE	11/04
DWG:	TS5
SHEET 7	OF 10S

CALL 48 HOURS BEFORE YOU DIG
1-800-553-4344
"It's the Law"
NORTHWEST UTILITIES NOTIFICATION CENTER

DESIGN & ENGINEERING DIVISION
DESIGN SECTION

BETTS BRIDGE #26 REPLACEMENT (SALMON CREEK AVE.)
TYPICAL SECTIONS

proud past, promising future
CLARK COUNTY
WASHINGTON

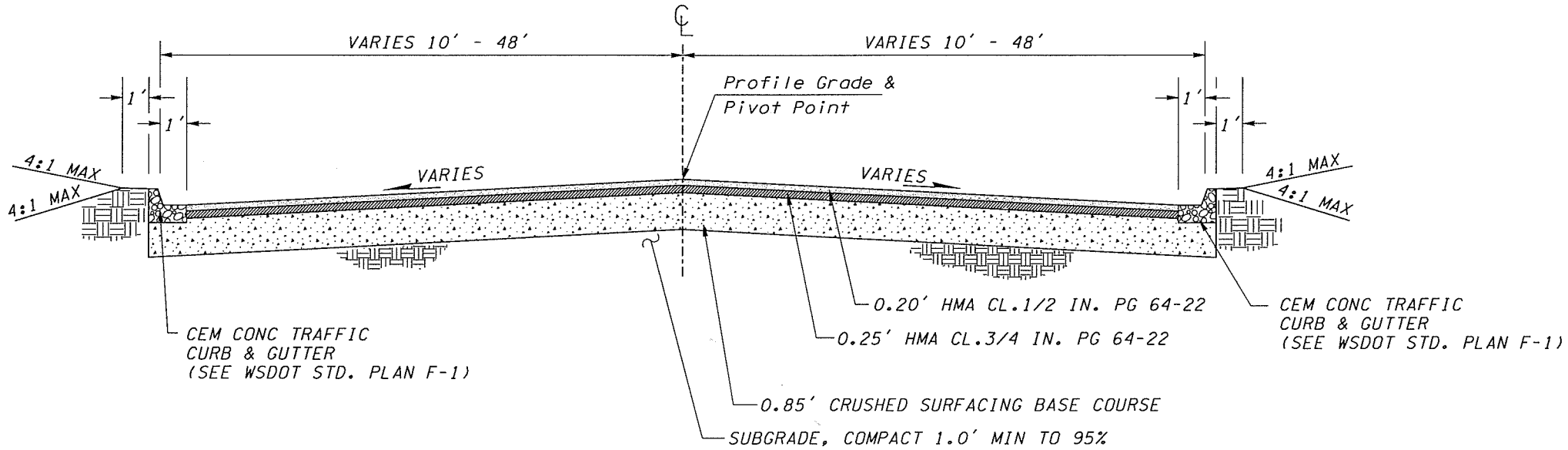

ROADWAY SECTION G

CORBIN ROAD STA 10+23.00 TO 10+60.40

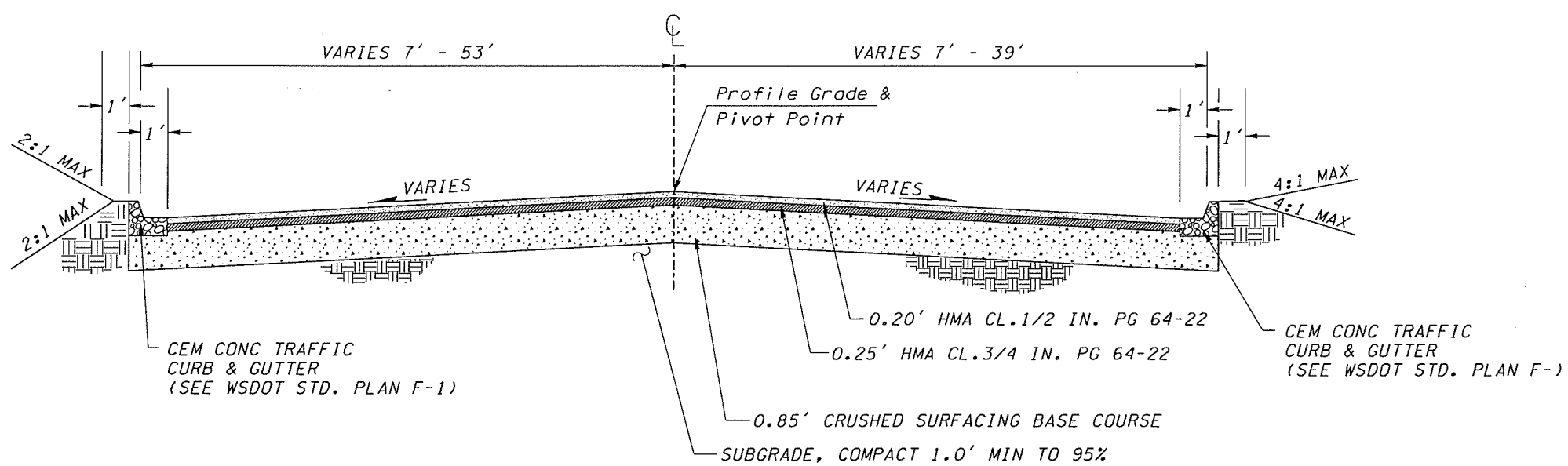

ROADWAY SECTION F

BETTS ROAD STA 10+23.00 TO 10+95.00

90% PLANS
PRELIMINARY

FEDERAL AID # BRM-4231(004)

PLOT11

DESIGNED	PW
DRAWN	PW
CRP	321222
HOR.	N/A
VERT.	N/A
DATE	11/04
DWG:	TS6
SHEET 8	OF 105

CALL 48 HOURS BEFORE YOU DIG
1-800-553-4344
"It's the Law"
NORTHWEST UTILITIES NOTIFICATION CENTER

DESIGN & ENGINEERING DIVISION
DESIGN SECTION

BETTS BRIDGE #26 REPLACEMENT (SALMON CREEK AVE.)
TYPICAL SECTIONS

proud past, promising future
CLARK COUNTY
WASHINGTON

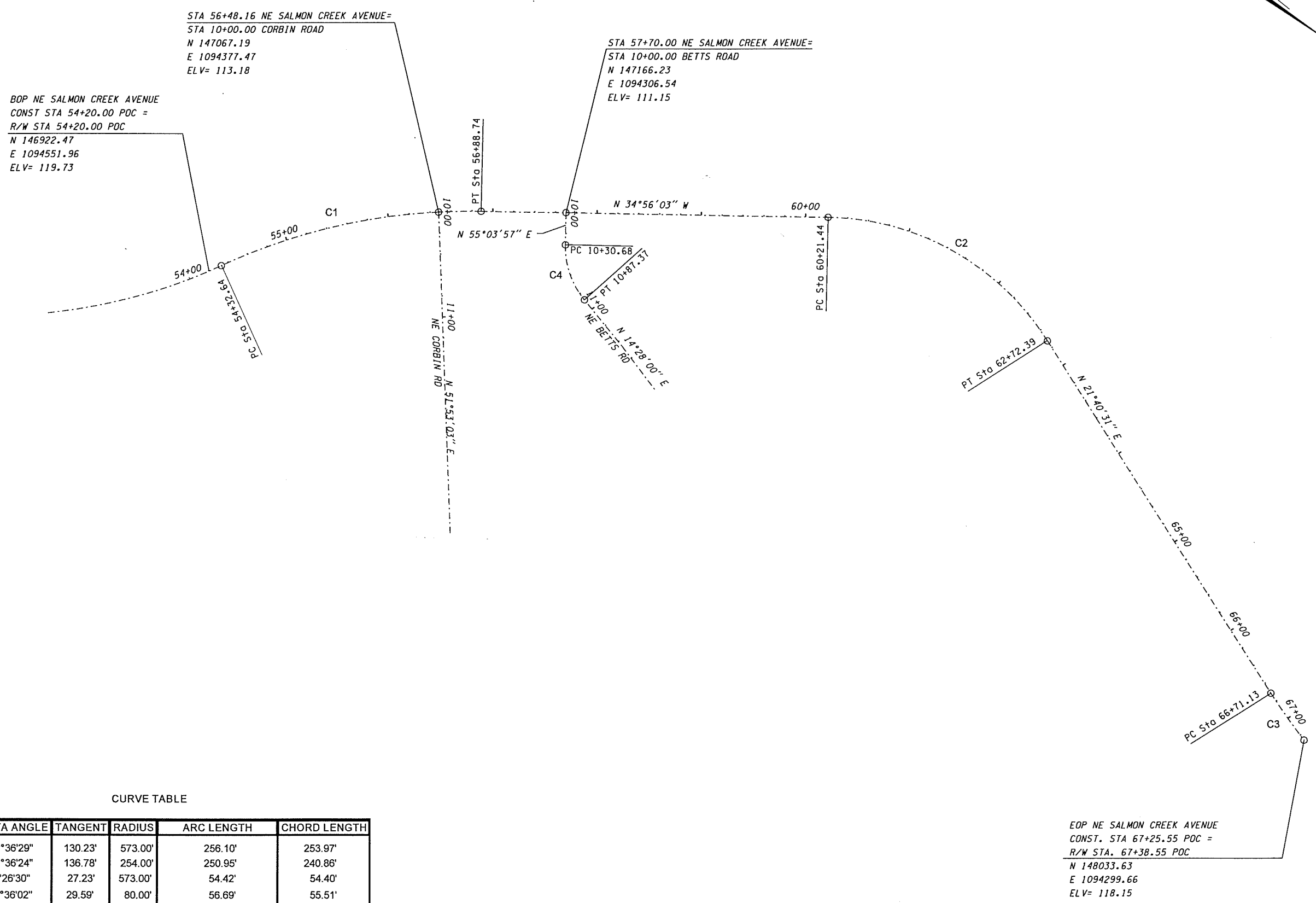

CURVE TABLE

NUMBER	DELTA ANGLE	TANGENT	RADIUS	ARC LENGTH	CHORD LENGTH
C1	25°36'29"	130.23'	573.00'	256.10'	253.97'
C2	56°36'24"	136.78'	254.00'	250.95'	240.86'
C3	5°26'30"	27.23'	573.00'	54.42'	54.40'
C4	40°36'02"	29.59'	80.00'	56.69'	55.51'

90% PLANS
PRELIMINARY

FEDERAL AID # BRM-4231(004)

PLOT1

DESIGNED	PW
DRAWN	PW
CRP	321222
HOR.	1" = 50'
VERT.	N/A
DATE	11/04
DWG:	HV1
SHEET	9 OF 105

CALL 48 HOURS BEFORE YOU DIG
1-800-553-4344
"It's the Law"
NORTHWEST UTILITIES NOTIFICATION CENTER

DESIGN & ENGINEERING DIVISION
DESIGN SECTION

BETTS BRIDGE #26 REPLACEMENT (SALMON CREEK AVE.)
HORIZONTAL / VERTICAL CONTROL

proud past, promising future
CLARK COUNTY WASHINGTON

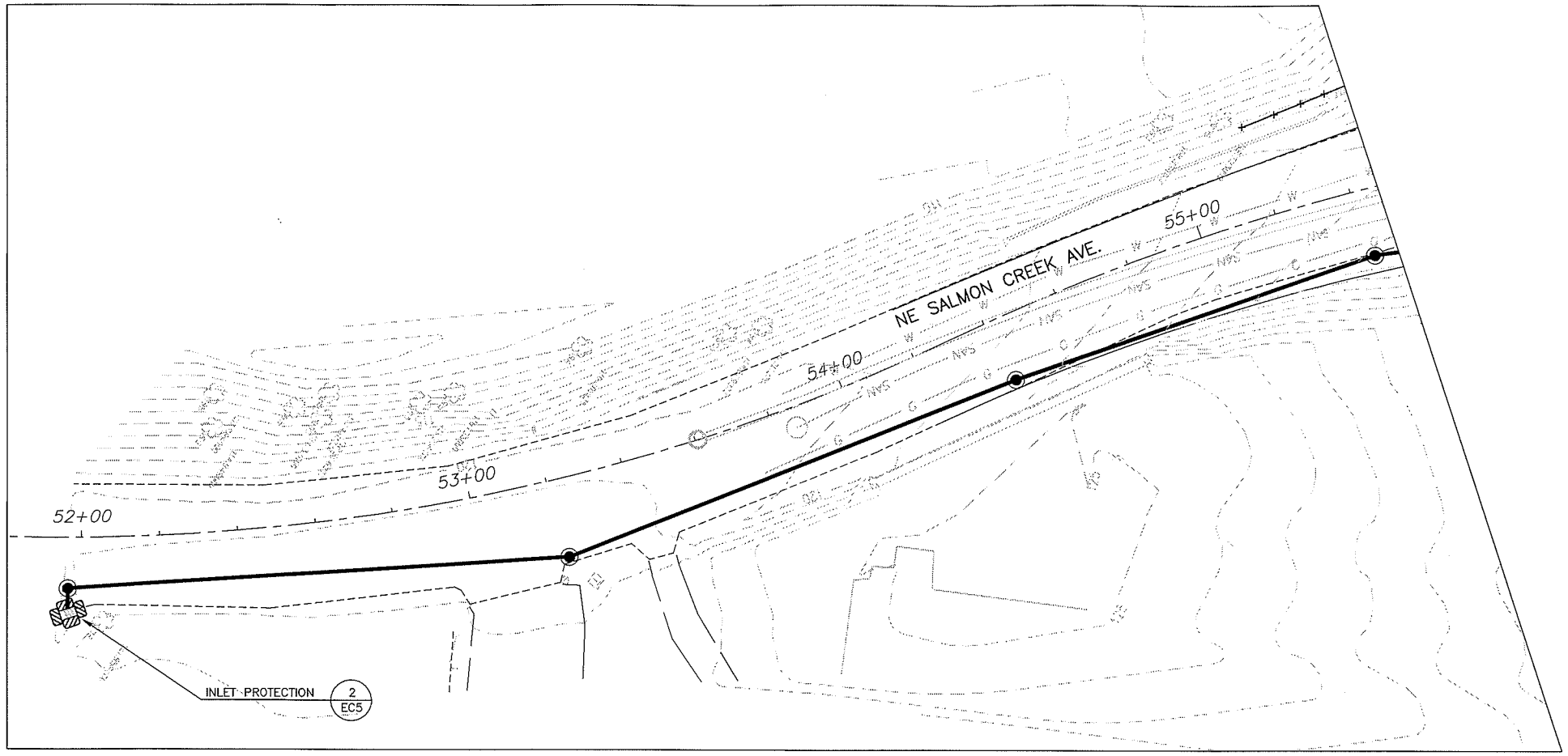

EROSION AND SEDIMENT CONTROL PLAN (51+80 TO 55+50)

SCALE: 1"=20' (FOR 22" X 34" SHEET)

LEGEND

- WATTLE SEDIMENT BARRIER
- SEDIMENT FENCE
- COIR EROSION CONTROL BLANKET
- CONSTRUCTION ENTRANCE
- INLET PROTECTION – BIO-BAGS

NOTES:

1. SEE SHEET EC4 & EC5 FOR CLARK COUNTY STANDARD EROSION CONTROL NOTES AND DETAILS. CONTRACTOR TO SELECT MOST PROTECTIVE DETAIL BASED ON SITE SPECIFIC CONDITIONS WHEN MULTIPLE DETAILS ARE PROVIDED.
2. CONTRACTOR TO PLACE SILT FENCE AROUND THE PERIMETER OF PROJECT DELINEATED WETLANDS TO ESTABLISH A 25' BUFFER WHERE FEASIBLE. AT NO TIME SHALL THE BUFFER BE LESS THAN 10' WITHOUT PRIOR APPROVAL BY THE ENGINEER OR AS SPECIFIED ON THESE PLANS.
3. SIGNIFICANT VARIATION AND DEGREE OF EROSION CONTROL EFFORT WILL BE DICTATED BY WEATHER CONDITIONS. THE CONTRACTOR SHOULD BE PREPARTED TO PROVIDE EXTRA EROSION CONTROL PROVISIONS AND EFFORT DURING WINTER AND WET WEATHER CONDITION BEYOND THAT NORMALLY REQUIRED DURING SUMMER AND DRY WEATHER CONDITIONS. FINE GRAINED AND UNCONSOLIDATED SOILS ON SLOPING SITES MAY BECOME UNSTABLE WHEN SUBJECT TO EXCESSIVE MOISTURE.

SCALE IN FEET

20 0 20 40

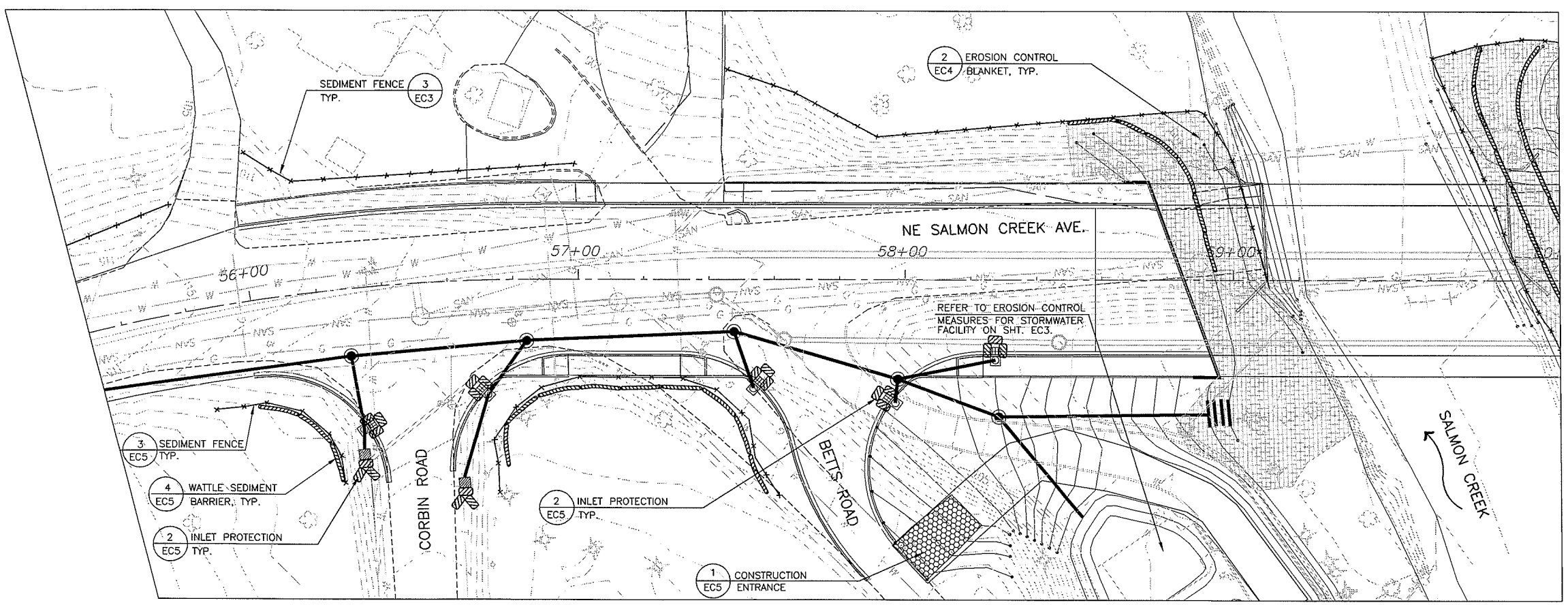

EROSION AND SEDIMENT CONTROL PLAN (55+50 TO 60+00)

SCALE: 1"=20' (FOR 22" X 34" SHEET)

EROSION CONTROL INSPECTION REQUIRED

CALL 397-2375 EXT. 2499
BEFORE YOU BEGIN ANY SITEWORK

FEDERAL AID # BRM-4231(004)

90% PLANS - PRELIMINARY

DESIGNED	ASZ
DRAWN	ASZ
CRP	321222
HOR.	1" = 20'
VERT.	NA
DATE	11/04
DWG.	EC1
SHEET	10 OF 105

CALL 48 HOURS BEFORE YOU DIG
1-800-553-4344
"It's the Law"
NORTHWEST UTILITIES NOTIFICATION CENTER

DESIGN & ENGINEERING DIVISION
DESIGN SECTION

BETTS BRIDGE #26 REPLACEMENT (SALMON CREEK AVE.)
EROSION & SEDIMENT CONTROL PLAN (51+80 TO 60+00)

proud past, promising future
CLARK COUNTY WASHINGTON

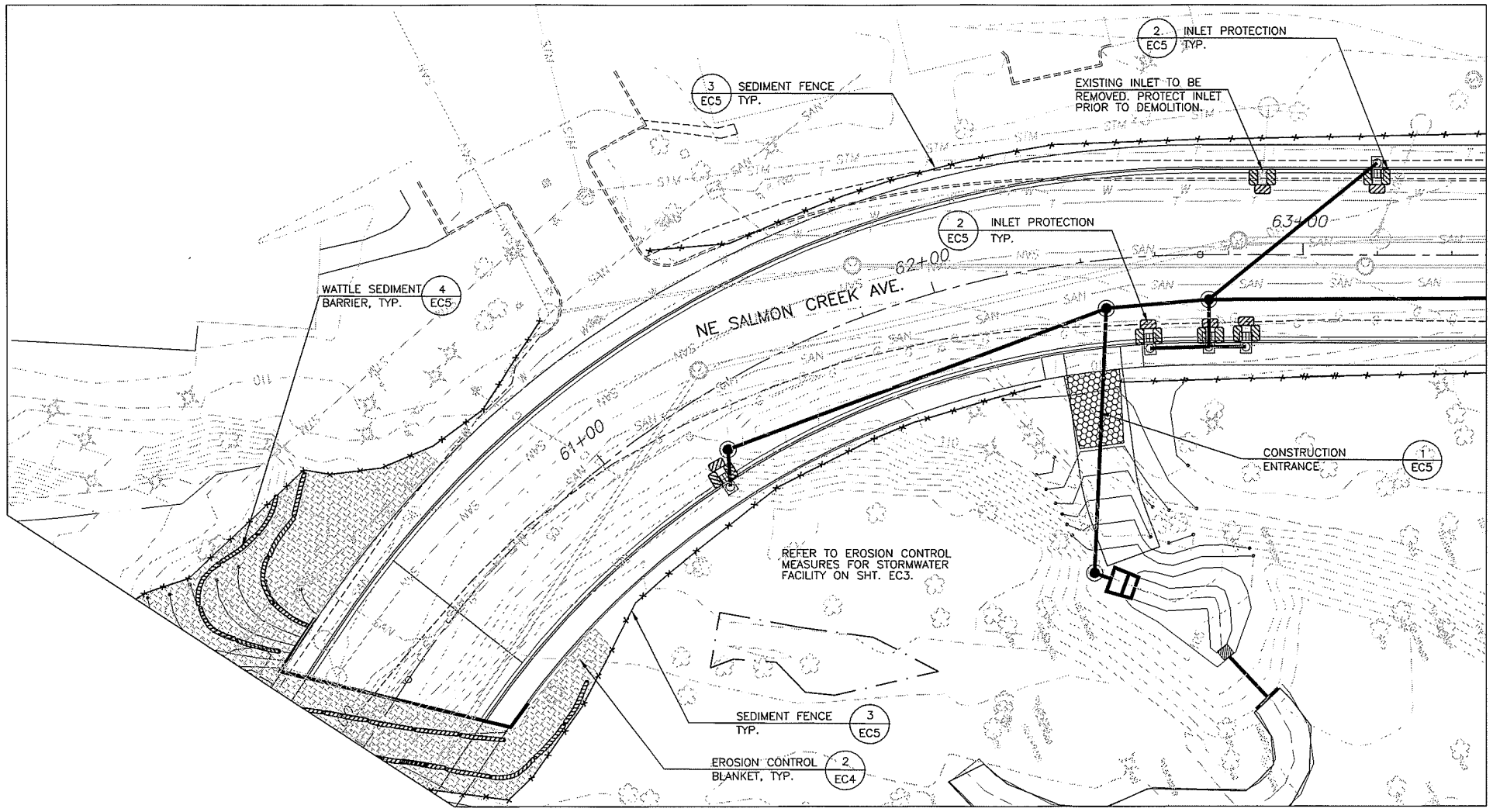

EROSION AND SEDIMENT CONTROL PLAN (60+00 TO 63+50)

SCALE: 1"=20' (FOR 22" X 34" SHEET)

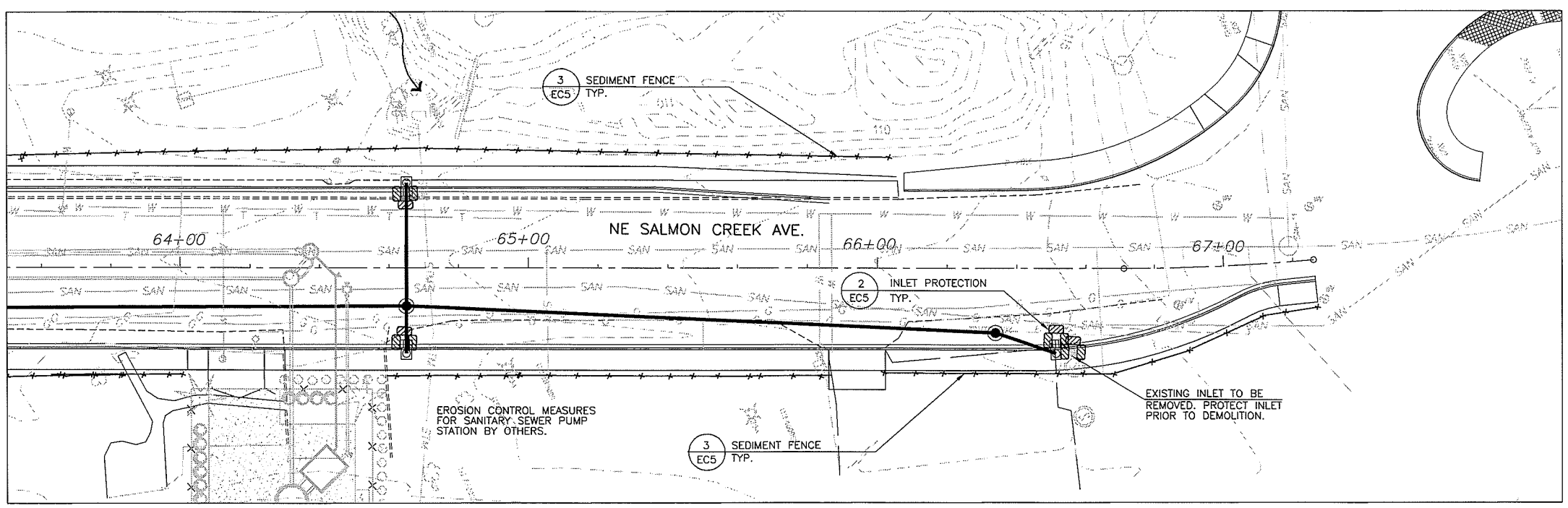

EROSION AND SEDIMENT CONTROL PLAN (63+50 TO 67+25)

SCALE: 1"=20' (FOR 22" X 34" SHEET)

LEGEND

- WATTLE SEDIMENT BARRIER
- SEDIMENT FENCE
- COIR EROSION CONTROL BLANKET
- CONSTRUCTION ENTRANCE
- INLET PROTECTION – BIO-BAGS

NOTES:

1. SEE SHEET EC4 & EC5 FOR CLARK COUNTY STANDARD EROSION CONTROL NOTES AND DETAILS. CONTRACTOR TO SELECT MOST PROTECTIVE DETAIL BASED ON SITE SPECIFIC CONDITIONS WHEN MULTIPLE DETAILS ARE PROVIDED.
2. CONTRACTOR TO PLACE SILT FENCE AROUND THE PERIMETER OF PROJECT DELINEATED WETLANDS TO ESTABLISH A 25' BUFFER WHERE FEASIBLE. AT NO TIME SHALL THE BUFFER BE LESS THAN 10' WITHOUT PRIOR APPROVAL BY THE ENGINEER OR AS SPECIFIED ON THESE PLANS.
3. SIGNIFICANT VARIATION AND DEGREE OF EROSION CONTROL EFFORT WILL BE DICTATED BY WEATHER CONDITIONS. THE CONTRACTOR SHOULD BE PREPARTED TO PROVIDE EXTRA EROSION CONTROL PROVISIONS AND EFFORT DURING WINTER AND WET WEATHER CONDITION BEYOND THAT NORMALLY REQUIRED DURING SUMMER AND DRY WEATHER CONDITIONS. FINE GRAINED AND UNCONSOLIDATED SOILS ON SLOPING SITES MAY BECOME UNSTABLE WHEN SUBJECT TO EXCESSIVE MOISTURE.

SCALE IN FEET

20 0 20 40

EROSION CONTROL INSPECTION REQUIRED

CALL 397-2375 EXT. 2499
BEFORE YOU BEGIN ANY SITEWORK

FEDERAL AID # BRM-4231(004)

90% PLANS - PRELIMINARY

DESIGNED	ASZ
DRAWN	ASZ
CRP	321222
HOR.	1" = 20'
VERT.	NA
DATE	11/04
DWG:	EC2
SHEET	11 OF 105

CALL 48 HOURS BEFORE YOU DIG 1-800-553-4344 "It's the Law" NORTHWEST UTILITIES NOTIFICATION CENTER

DESIGN & ENGINEERING DIVISION
DESIGN SECTION

BETTS BRIDGE #26 REPLACEMENT (SALMON CREEK AVE.)
EROSION & SEDIMENT CONTROL PLAN (60+00 TO 67+25)

proud past, promising future

CLARK COUNTY WASHINGTON

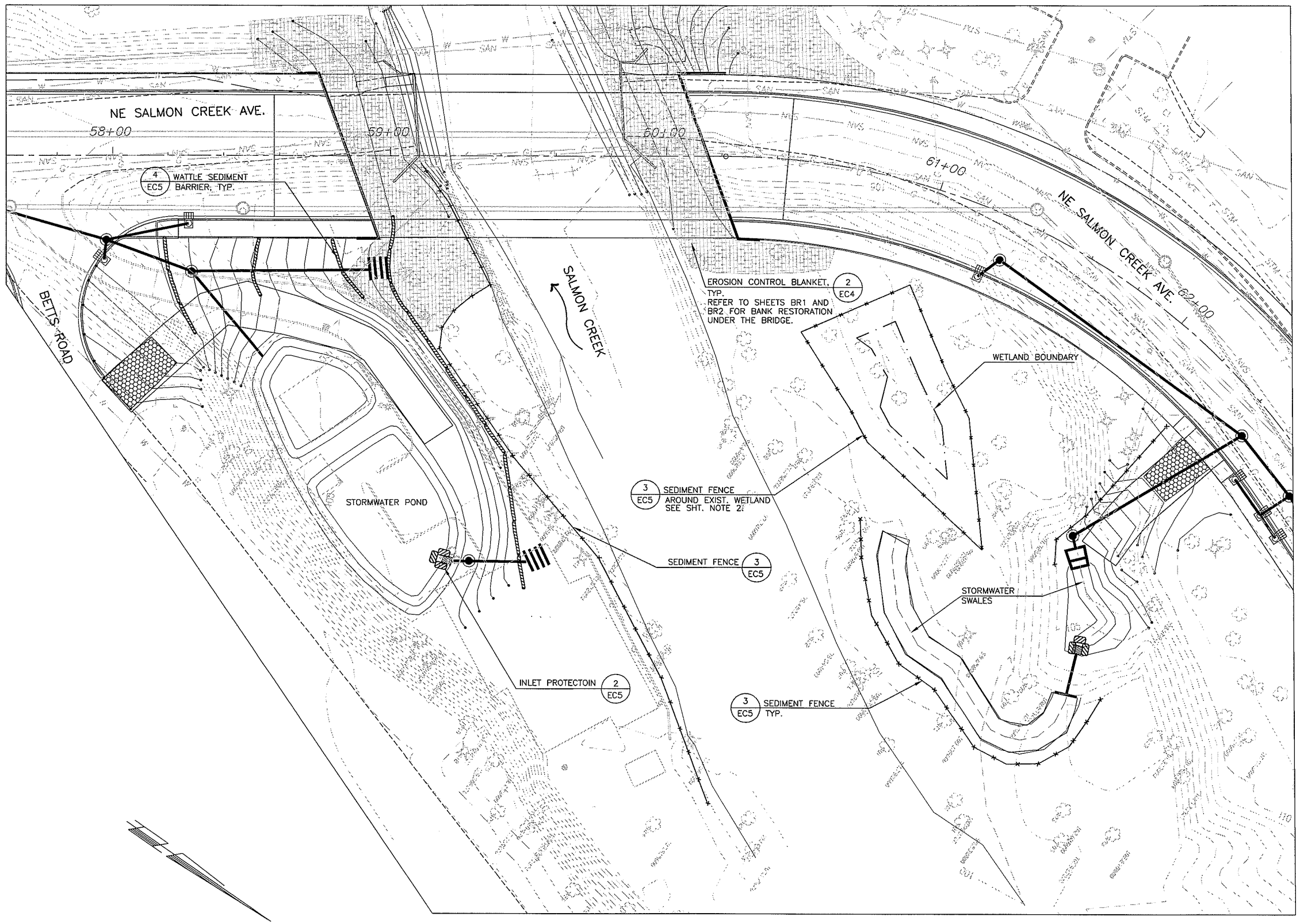

LEGEND

- WATTLE SEDIMENT BARRIER
- SEDIMENT FENCE
- COIR EROSION CONTROL BLANKET
- CONSTRUCTION ENTRANCE
- INLET PROTECTION – BIO-BAGS

NOTES:

1. SEE SHEET EC4 & EC5 FOR CLARK COUNTY STANDARD EROSION CONTROL NOTES AND DETAILS. CONTRACTOR TO SELECT MOST PROTECTIVE DETAIL BASED ON SITE SPECIFIC CONDITIONS WHEN MULTIPLE DETAILS ARE PROVIDED.
2. CONTRACTOR TO PLACE SILT FENCE AROUND THE PERIMETER OF PROJECT DELINEATED WETLANDS TO ESTABLISH A 25' BUFFER WHERE FEASIBLE. AT NO TIME SHALL THE BUFFER BE LESS THAN 10' WITHOUT PRIOR APPROVAL BY THE ENGINEER OR AS SPECIFIED ON THESE PLANS.
3. SIGNIFICANT VARIATION AND DEGREE OF EROSION CONTROL EFFORT WILL BE DICTATED BY WEATHER CONDITIONS. THE CONTRACTOR SHOULD BE PREPARTED TO PROVIDE EXTRA EROSION CONTROL PROVISIONS AND EFFORT DURING WINTER AND WET WEATHER CONDITION BEYOND THAT NORMALLY REQUIRED DURING SUMMER AND DRY WEATHER CONDITIONS. FINE GRAINED AND UNCONSOLIDATED SOILS ON SLOPING SITES MAY BECOME UNSTABLE WHEN SUBJECT TO EXCESSIVE MOISTURE.

EROSION AND SEDIMENT CONTROL PLAN FOR WATER QUALITY FACILITIES

SCALE: 1"=20' (FOR 22" X 34" SHEET)

EROSION CONTROL INSPECTION REQUIRED
CALL 397-2375 EXT. 2499
BEFORE YOU BEGIN ANY SITEWORK

FEDERAL AID # BRM-4231(004)

90% PLANS - PRELIMINARY

DESIGNED	ASZ
DRAWN	ASZ
CRP	321222
HOR.	1" = 20'
VERT.	NA
DATE	11/04
DWG:	EC3
SHEET 12 OF 105	

CALL 48 HOURS BEFORE YOU DIG
1-800-553-4344
"It's the Law"
NORTHWEST UTILITIES NOTIFICATION CENTER

DESIGN & ENGINEERING DIVISION
DESIGN SECTION

BETTS BRIDGE #26 REPLACEMENT (SALMON CREEK AVE.)
EROSION AND SEDIMENT CONTROL PLAN FOR WATER QUALITY AND STORMWATER MANAGEMENT FACILITIES

proud past, promising future
CLARK COUNTY WASHINGTON

STANDARD NOTES FOR EROSION CONTROL PLAN

1. The Contractor shall install and maintain BMP's as shown and perform all actions necessary to prevent erosion, and control sediment from leaving the construction site. Site Contractor shall comply with Clark County Code Chapter 40.380.050.

2. All erosion control measures shall be in-place and in working condition prior to disturbing and exposing any soil surfaces (i.e. silt fence, construction entrance, sedimentation barriers, sedimentation traps).

3. All erosion prevention and control BMP's shall be maintained and repaired as needed to insure continued performance of their intended function. Needed repairs shall be made as soon as practicable. They are to remain in place and operational during all phases of construction. Construction activities shall not continue or resume until repairs to erosion control facilities are made and the facilities are functional. Any sediment leaving the site or discharging to a sensitive area shall be stopped and controlled immediately. Contaminated areas shall be cleaned and restored.

4. Clearing limits and work area limits shall be delineated and marked. Do not disturb more area than needed for construction requirements.

5. All sensitive or critical areas (wetlands, steep slopes, natural waterways), and buffers shall all be clearly delineated and clearly marked, and protected from sediment deposition.

6. Sediment laden runoff shall be prevented from entering all existing storm water catch basins and inlets affected by construction.

7. No exposed, bare soils shall remain unstabilized for more than two days during the period October 1 thru April 30 or for more than seven days during the period of May 1 through September 30. All disturbed soil surfaces shall be stabilized by a suitable application of "Best Management Practices".

8. Where feasible, no more than 500 feet of trench shall be open at one time. Excavated material shall be placed on the up-hill side of trenches provided it does not conflict with safety requirements.

9. Dewatering devices shall discharge into a sediment trap or sediment pond. No discharge shall be made to a paved street or stormwater collection system without first removing sediment.

10. Cut and fill slopes shall be constructed in a manner that will minimize erosion. Erosion shall be controlled and prevented by such measures as roughening the surface, installation of interceptor ditches, terracing, covering with matting, mulch or plastic sheeting. Runoff shall be prevented from entering a slope and from undercutting the base of slopes.

11. Any soil or debris transported onto roadways and sidewalks shall be removed. Deposits shall be completely removed by shoveling and/or sweeping. Washing shall not be utilized unless specifically approved in writing by the County.

12. All permanent infiltration systems shall be isolated and protected from sediment laden runoff entering to avoid risk of reducing the ability of the systems to infiltrate. Isolation and protection shall not be removed until the drainage area tributary to the system is completely stabilized.

CONTINUED ON SHEET 2

NO.	REVISIONS	DATE	BY

DWG: ECN1.DWG

Department of Public Works
CLARK COUNTY WASHINGTON
proud past, promising future

STANDARD NOTES FOR EROSION CONTOL PLAN

APPROVED
Peter Capell — COUNTY ENGINEER — 01/01/04 DATE

STANDARD ECN1
PLAN No.
DESIGNED SCH
DRAWN SCH
DATE 08/02/02

STANDARD NOTES FOR EROSION CONTROL PLAN (CONTINUED)

13. All conveyance channels, both temporary and permanent shall be stabilized to prevent erosion of the channel. Stabilization shall extend to areas at outlets and downstream reaches vulnerable to erosion resulting from flow discharging from the channel.

14. If BMP's shown are utilized but are insufficient to prevent sediment from reaching water bodies, adjacent properties, or public rights-of-way; additional BMP's shall be implemented immediately to prevent further encroachment of sediment.

15. Stabilized areas shall be provided for employee parking and storage of construction materials. Erodeable stockpiles of earthen materials, such as topsoil, silty and clayey soils; and landscape materials, shall be covered when not being incorporated in the work. Erosion control BMP's shall be utilized as necessary to prevent sediment laden runoff from leaving or sediment being transported from these areas from vehicle activity.

16. All pollutants other than sediment that occur during construction shall be handled and disposed of in a manner that does not cause contamination of storm water.

17. The Contractor shall keep an inspection log of the condition of the erosion control facilities. Erosion control facilities shall be inspected at least weekly and after each rainfall. The inspection log shall be kept at the project site at a designated location and shall be available for review by the County. An individual that has successfully completed the County's Erosion Control Certification course shall perform inspections and maintain the log.

18. All temporary BMP's shall be removed within 30 days after final site stabilization is achieved. Trapped sediment shall be deposited and stabilized on site. Areas disturbed resulting from removal shall be permanently stabilized.

19. Construction shall not be considered complete and acceptable until all disturbed soil surfaces have been protected from erosion with permanent landscaping, covering with impervious surfaces, restored to original undisturbed condition or permanently stabilized.

20. Vegetated stabilization and landscaping shall be fertilized, watered and maintained to insure that growth of vegetation is established and sustained.

21. During dry weather construction periods the contractor shall provide project-specific dust control measures that may include: Seeding, Mulching, Matting, Water, Tackifier, or Chemical Soil Stabilizers. The contractor shall maintain the dust control measures through dry weather periods until all disturbed areas have been stabilized. Immediately re-stabilize areas disturbed by contractor's operations or other activities (wind, water, vandalism, etc.).

22. Entry onto the construction site shall be restricted to a single approved entrance as shown on the plan.

23. Maintenance and repair of heavy equipment and vehicles which involve potential contaminants (oil,solvents,hydraulic fluid, etc.) must be conducted in a manner which prevents contamination of soils, surface water and ground water. Tarps, drip pans, or other appropriate measures shall be used as necessary.

24. Stripping, topsoil, and unsuitable material stockpiles shall be hydroseeded with "regreen wheat x wheat grass hybrid" by Hobbs and Hobkins (or approved equal). Maintenance of stockpile areas and reapplication of hydroseed covering shall be required if bare soil is present. During winter and wet weather conditions, stockpiles shall be covered with plastic sheeting per detail E-16.

SHEET 2 OF 2

NO.	REVISIONS	DATE	BY

DWG: ECN.DWG

Department of Public Works
CLARK COUNTY WASHINGTON
proud past, promising future

STANDARD NOTES (CONTINUED) FOR EROSION CONTOL PLAN

APPROVED
Peter Capell — COUNTY ENGINEER — 01/01/04 DATE

STANDARD ECN2
PLAN No.
DESIGNED SCH
DRAWN SCH
DATE 07/22/03

CLARK COUNTY STANDARD EROSION CONTROL NOTES

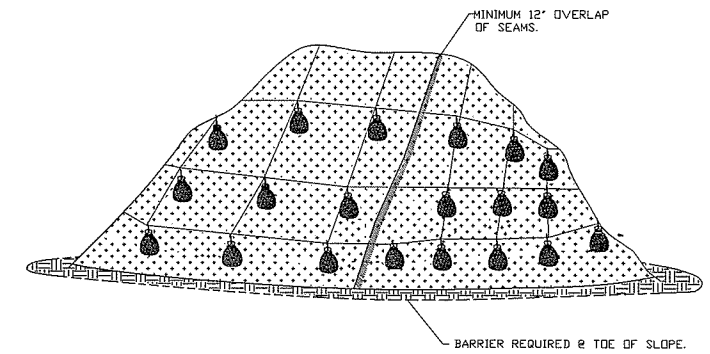

PLASTIC SHEETING

NOTES:

1. PLASTIC SHEETING IS USED TO PROVIDE IMMEDIATE PROTECTION TO SLOPES AND STOCKPILES.

2. DO NOT USE PLASTIC COVERING UPSLOPE OF AREAS SUCH AS STEEP AND/OR UNSTABLE SLOPES THAT MIGHT BE ADVERSELY AFFECTED BY CONCENTRATED RUNOFF.

3. WHEN POSSIBLE, INSTALL AN INTERCEPTER DIKE AT THE TOP OF THE PLASTIC TO DIVERT FLOWS AWAY FROM THE PLASTIC.

4. TOE-IN THE TOP OF THE SHEETING IN A 6"x6" TRENCH BACKFILLED WITH COMPACTED NATIVE MATERIAL.

5. INSTALL A GRAVEL BERM, RIPRAP, OR OTHER SUITABLE PROTECTION AT THE TOP OF THE SLOPE IN ORDER TO DISSIPATE RUNOFF VELOCITY.

6. ANCHOR THE PLASTIC USING SANDBAGS OR OTHER SUITABLE TETHERED ANCHOR SYSTEM SPACED ON A 10' GRID SPACING IN ALL DIRECTIONS.

7. OVERLAP SEAMS 1-2', TAPE, ROLL AND STAKE THE SEAMS AND THEN WEIGH DOWN THE ENTIRE LENGTH.

8. BARRIER IS REQUIRED @ TOE OF STOCK PILE.

9. REPLACE TORN SHEETS AND REPAIR OPEN SEAMS. COMPLETELY REMOVE AND REPLACE PLASTIC WHEN IT BEGINS TO DETERIORATE.

NO.	REVISIONS	DATE	BY

DWG: E-16.DWG

Department of Public Works
CLARK COUNTY WASHINGTON
proud past, promising future

PLASTIC SHEETING

APPROVED
Peter Capell — COUNTY ENGINEER — 01/01/04 DATE

STANDARD E-16
PLAN No.
DESIGNED SCH
DRAWN SCH
DATE 08/12/02

1 PLASTIC SHEETING – DETAIL E-16
SCALE: NTS

CLARK COUNTY STANDARD
DETAIL E-17A TO BE ADDED.

CLARK COUNTY STANDARD
DETAIL E-17B TO BE ADDED.

2 EROSION CONTROL BLANKET-SLOPES
SCALE: NTS

3 EROSION CONTROL BLANKET-CHANNEL
SCALE: NTS

90% PLANS - PRELIMINARY

DESIGNED	ASZ
DRAWN	ASZ
CRP	321222
HOR.	NA
VERT.	NA
DATE	11/04
DWG:	EC4
SHEET 13 OF 105	

CALL 48 HOURS BEFORE YOU DIG
1-800-553-4344
"It's the Law"
NORTHWEST UTILITIES NOTIFICATION CENTER

DESIGN & ENGINEERING DIVISION
DESIGN SECTION

BETTS BRIDGE #26 REPLACEMENT (SALMON CREEK AVE.)
EROSION CONTROL DETAILS – SHEET 1

proud past, promising future
CLARK COUNTY WASHINGTON

FEDERAL AID # BRM-4231(004)

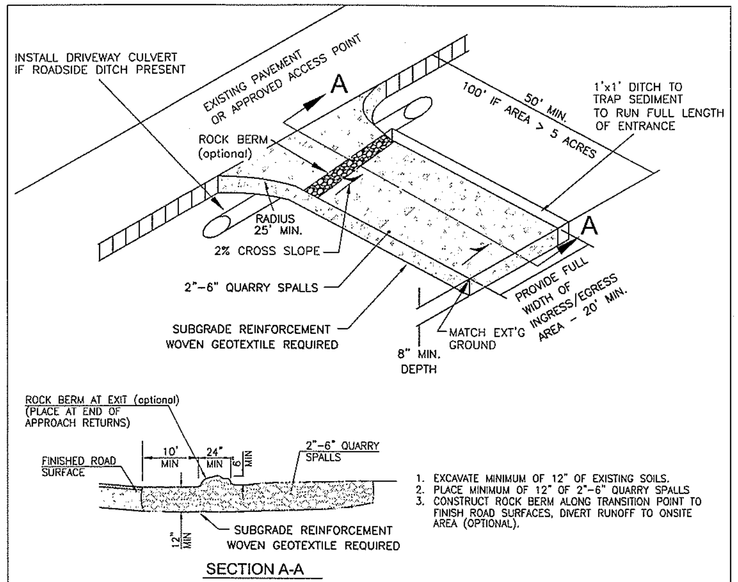

1. EXCAVATE MINIMUM OF 12" OF EXISTING SOILS.
2. PLACE MINIMUM OF 12" OF 2"-6" QUARRY SPALLS
3. CONSTRUCT ROCK BERM ALONG TRANSITION POINT TO FINISH ROAD SURFACES, DIVERT RUNOFF TO ONSITE AREA (OPTIONAL).

NOTES:

1. FOR DEVELOPMENT PROJECTS REVIEWED BY ENGINEERING SERVICES. NOT FOR USE WITH SINGLE FAMILY OR DUPLEX RESIDENTIAL BUILDING PERMITS. SEE BUILDING DEPT. FOR GRAVEL CONSTRUCTION ENTRANCE PLAN.
2. INSTALL WOVEN GEOTEXTILE FABRIC TO PREVENT SUB-SOIL PUMPING.
3. VEHICLE WASHDOWN AREA, IF REQUIRED, IS TO BE INSTALLED AND USED TO REMOVE SEDIMENT FROM VEHICLES THAT ARE ABOUT TO ENTER AN ESTABLISHED ROAD.
4. WASHDOWN AREA TO BE MADE UP OF CLEAN 2"- 6" QUARRY SPALLS, 1" DEEP (MIN) OVER WOVEN GEOTEXTILE FABRIC. WASHDOWN AREA TO BE FULL WIDTH OF ENTRANCE AND 50' (MIN.), AND 100' IF EXPOSED SOIL IS OVER 5 ACRES.
5. AT TIME OF PRECONSTRUCTION MEETING, THE COUNTY INSPECTOR MAY REQUIRE THE ENTRANCE TO BE PAVED TO THE EDGE OF THE RIGHT-OF-WAY PRIOR TO THE INSTALLATION OF A WASHDOWN ENTRANCE TO AVOID DAMAGE TO THE EXISTING ROADWAY.
6. THE RESPONSIBLE EROSION CONTROL INDIVIDUAL IS TO ENSURE THAT ALL VEHICLES USE THIS ENTRANCE AND ARE TO BE INSPECTED AND CLEANED OF SOILS BEFORE LEAVING PROJECT, AND THAT THE ENTRANCE IS TO BE KEPT CLEAN AT ALL TIMES.

NO.	REVISIONS	DATE	BY

DWG: DWG

Department of Public Works
CLARK COUNTY WASHINGTON
proud past, promising future

STANDARD CONSTRUCTION ENTRANCE — APPROVED — COUNTY ENGINEER — 01/01/04 DATE — STANDARD E-1 PLAN No. DESIGNED D DRAWN D DATE XX/XX/XX

1 CONSTRUCTION ENTRANCE
SCALE: NTS

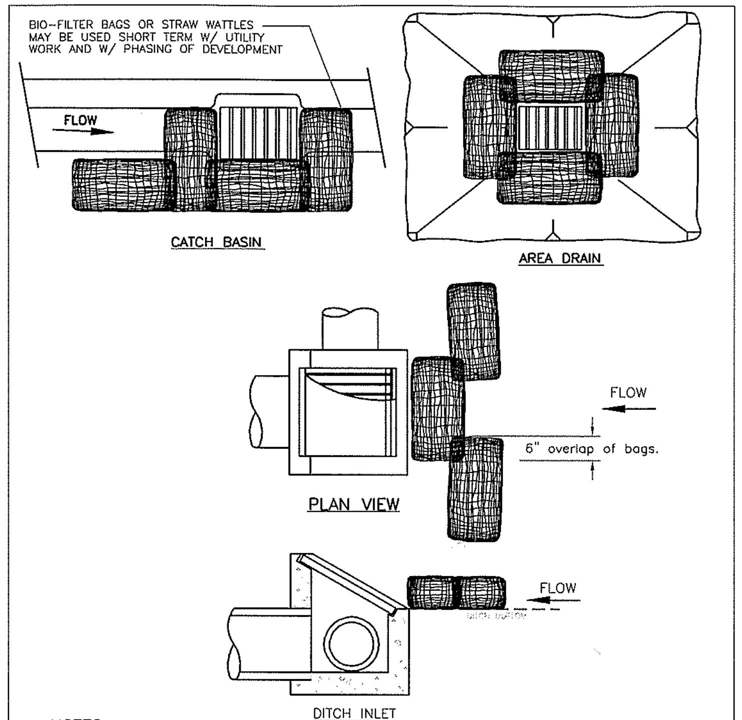

NOTES:

1. ADDITIONAL MEASURES MUST BE CONSIDERED DEPENDING ON SOIL TYPE.
2. BIO-FILTER BAGS SHOULD BE STAKED WHERE APPLICABLE USING (2) 1"x2" WOODEN STAKES OR APPROVED EQUAL PER BAG.
3. STRAW WATTLES MUST BE STABILIZED BY ATTACHING WIRE CLIPS TO THE CATCH BASIN PER MANUFACTURES SPECIFICATIONS.
4. INLET PROTECTION MUST BE REGULARLY INSPECTED BY THE EROSION CONTROL INDIVIDUAL TO INSURE PROPER PLACEMENT/FUNCTION AND MAINTENANCE.
5. SEE INLET PROTECTION NOTES STD. PLAN E-3

NO.	REVISIONS	DATE	BY

DWG: DWG

Department of Public Works
CLARK COUNTY WASHINGTON
proud past, promising future

INLET PROTECTION TYPE 4 BIOFILTRATION BAGS — APPROVED — COUNTY ENGINEER — 01/01/04 DATE — STANDARD E-3c PLAN No. DESIGNED D DRAWN D DATE XX/XX/XX

2 INLET PROTECTION
SCALE: NTS

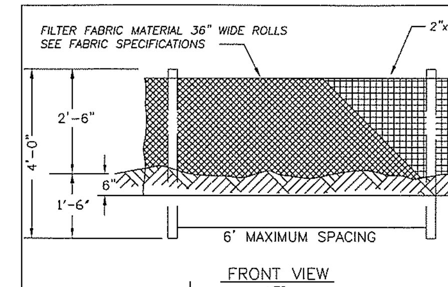

SEDIMENT FENCE FABRIC SPECIFICATIONS (Woven Polypropylene sediment fence fabric)

PROPERTY	TEST PROCEDURE	MIN. FABRIC VALUE
Grab Tensile Strength	ASTM D-4632	180 lbs.
Grab elongation	ASTM D-4632	15%
trapezoid Tear	ASTM D-4533	70 lbs.
Mullen Burst	ASTM D-3786	300 psi.
Puncture	ASTM D-4833	80 lbs.
Permittivity	ASTM D-4491	0.07 sec-1
Permeability	ASTM D-4491	.005 cm/sec
A.O.S.	ASTM D-4751	50 U.S. Sieve
UV Resistance(500 hrs)	ASTM D-4355	90%

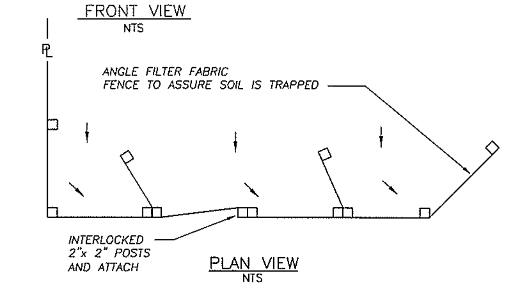

NOTES
1. THIS SEDIMENT BARRIER UTILIZES STANDARD STRENGTH OR EXTRA STRENGTH SYNTHETIC FILTER FABRICS. IT IS DESIGNED FOR SITUATIONS IN WHICH ONLY SHEET OR OVERLAND FLOWS ARE EXPECTED. (SEE FABRIC SPECIFICATIONS ABOVE)
2. BURY BOTTOM OF FILTER FABRIC 6" VERTICALLY BELOW FINISHED GRADE.
3. POST ARE TO BE 2"x2" FIR, PINE OR STEEL FENCE POSTS.
4. POST TO BE INSTALLED ON UPHILL SIDE OF SLOPE.
5. COMPACT BOTH SIDES OF FILTER FABRIC TRENCH.
6. SEDIMENT FENCE TO BE SPACED ON SLOPES PER TABLE BELOW.

INSTALL PARALLEL ALONG CONTOURS AS FOLLOWS

% SLOPE	SLOPE	MAX. SPACING ON SLOPE
10% FLATTER	10:1 OR FLATTER	300 ft.
10>%<15	10:1>x<7.5:1	150 ft.
15>%<20	7.5:1>x<5:1	100 ft.
20>%<30	5:1>x<3.5:1	50 ft.
30>%<50	3.5:1>x<2:1	25 ft.

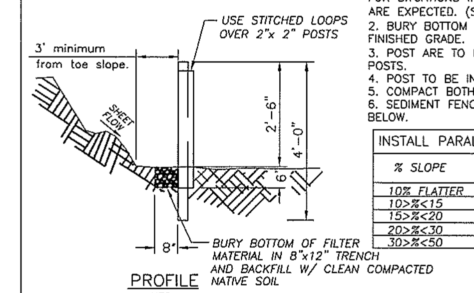

NO.	REVISIONS	DATE	BY

DWG: DWG

Department of Public Works
CLARK COUNTY WASHINGTON
proud past, promising future

STANDARD SEDIMENT FENCE — APPROVED — COUNTY ENGINEER — 01/01/04 DATE — STANDARD E-4 PLAN No. DESIGNED D DRAWN D DATE XX/XX/XX

3 SEDIMENT FENCE
SCALE: NTS

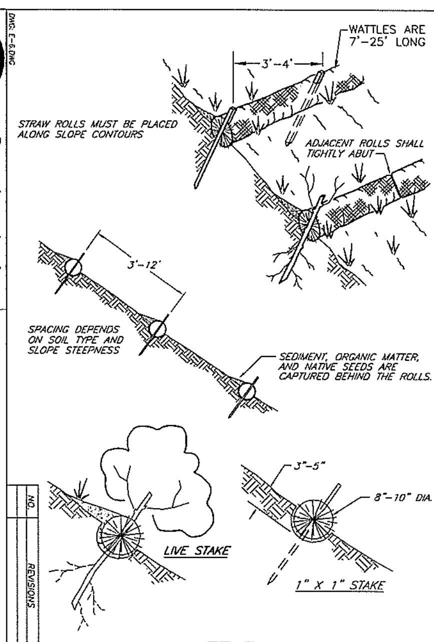

WATTLE DETAIL
NTS

WATTLES STAKED ALONG THE CONTOUR OF NEWLY CONSTRUCTED OR DISTURBED SLOPES. CAN OFTEN BE USED TO REPLACE SEDIMENT FENCES ON STEEP SLOPES.

Construction Specifications:
Prepare the slope before the wattling procedure is started.

Shallow gullies should be smoothed as work progresses.

Dig small trenches across the slope on contour, to place rolls in. The trench should be deep enough to accommodate half the thickness of the roll. When the soil is loose and uncompacted, the trench should be deep enough to bury the roll 2/3 of its thickness because the ground will settle.

It is critical that rolls are installed perpendicular to water movement, parallel to the slope contour.

Start building trenches and install rolls from the bottom of the slope and work up.

Construct trenches at contour intervals of 3-12 feet apart depending on steepness of slope. The steeper the slope, the closer together the trenches.

Lay the roll along the trenches fitting it snugly against the soil. Make sure no gaps exist between the soil and the straw wattle.

Use a straight bar to drive holes through the wattle and into the soil for the willow or wooden stakes.

Drive the stake through prepared hole into soil. Leave only 1 or 2 inches of stake exposed above roll.

If using willow stakes refer to Live Staking BMP.

Install stakes at least every 4 feet apart through the wattle. Additional stakes may be driven on the downslope side of the trenches on highly erosive or very steep slopes.
Inspection and Maintenance:

Inspect the straw rolls and the slopes after significant storms. Make sure the rolls are in contact with the soil.

Repair any rills or gullys promptly.

Reseed or replant vegetation if necessary until the slope is stabilized.

NO.	REVISIONS	DATE	BY

DWG: E-6.DWG

Department of Public Works
CLARK COUNTY WASHINGTON
proud past, promising future

WATTLE SEDIMENT BARRIER — APPROVED — COUNTY ENGINEER — 01/01/04 DATE — STANDARD E-6 PLAN No. DESIGNED SCH DRAWN SCH DATE 08/06/02

4 WATTLE SEDIMENT BARRIER
SCALE: NTS

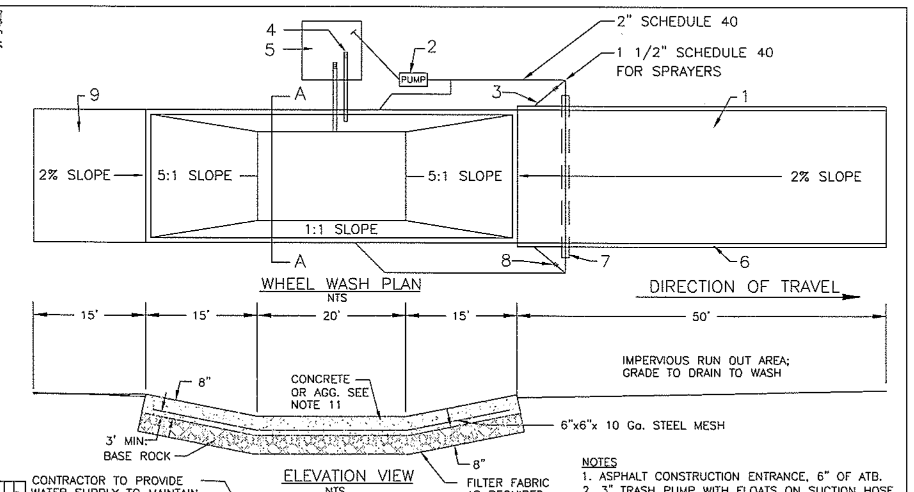

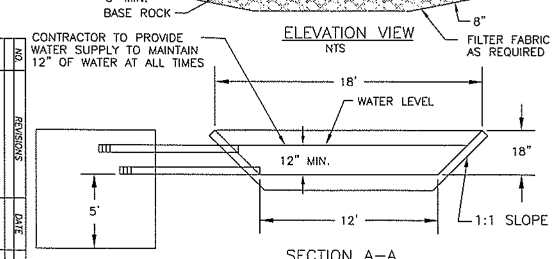

NOTES
1. ASPHALT CONSTRUCTION ENTRANCE, 6" OF ATB.
2. 3" TRASH PUMP WITH FLOATS ON SUCTION HOSE.
3. MIDPOINT SPRAY NOZZLES, IF NEEDED.
4. 6" SEWER PIPE WITH BUTTERFLY VALVES. BOTTOM PIPE IS A DRAIN. LOCATE TOP PIPE'S INVERT 1' ABOVE BOTTOM OF WHEEL WASH.
5. 8'x 8' SUMP WITH 5' OF CATCHMENT. BUILD WITH ABILITY TO CLEAN WITH BACKHOE.
6. ASPHALT CURB ON THE LOW ROAD SIDE TO DIRECT WATER BACK TO POND.
7. 6" SLEEVE UNDER ROAD.
8. BALL VALVES.
9. ATB APRON TO PROTECT FROM SPLASHING WATER.
10. CONTRACTOR TO REMOVE ACCUMULATED SEDIMENT FROM WHEEL WASH; MAY BE PIPED TO AN APPROVED SEDIMENT TRAP.
11. USE GEOTEXTILE FABRIC WITH AGGREGATE FOR A TEMPORARY WHEEL WASH.

NO.	REVISIONS	DATE	BY

DWG: E-15

Department of Public Works
CLARK COUNTY WASHINGTON
proud past, promising future

WHEEL WASH — APPROVED — COUNTY ENGINEER — 01/01/04 DATE — STANDARD E-15 PLAN No. DESIGNED SCH DRAWN SCH DATE 08/12/02

5 WHEEL WASH
SCALE: NTS

FEDERAL AID # BRM-4231(004)

90% PLANS - PRELIMINARY

DESIGNED	ASZ
DRAWN	ASZ
CRP	321222
HOR.	NA
VERT.	NA
DATE	11/04
DWG:	EC5
SHEET	14 OF 105

CALL 48 HOURS BEFORE YOU DIG
1-800-553-4344
"It's the Law"
NORTHWEST UTILITIES NOTIFICATION CENTER

DESIGN & ENGINEERING DIVISION
DESIGN SECTION

BETTS BRIDGE #26 REPLACEMENT (SALMON CREEK AVE.)
EROSION CONTROL DETAILS - SHEET 2

proud past, promising future
CLARK COUNTY WASHINGTON

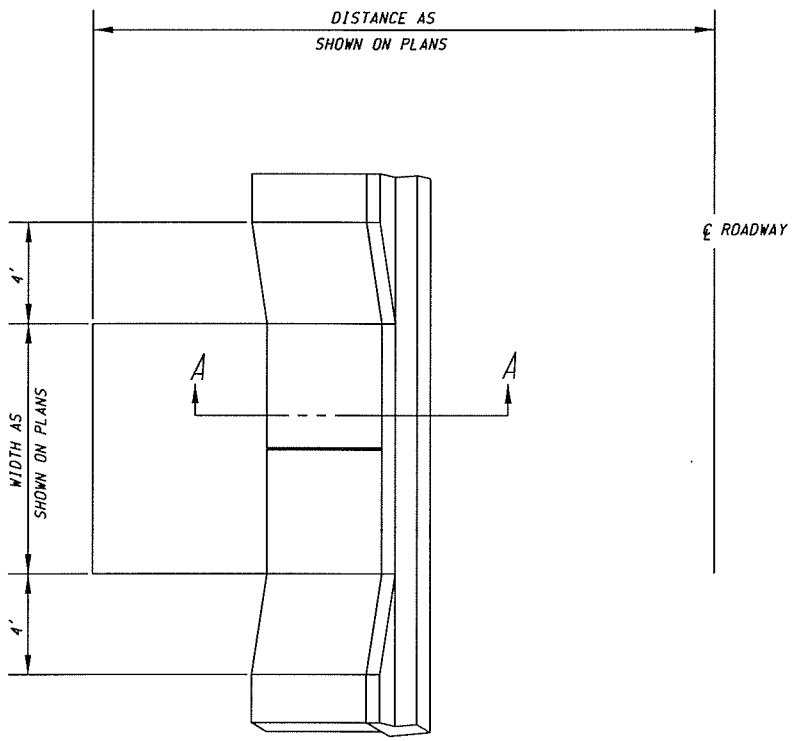

TYPICAL DRIVEWAY ENTRANCE

NTS

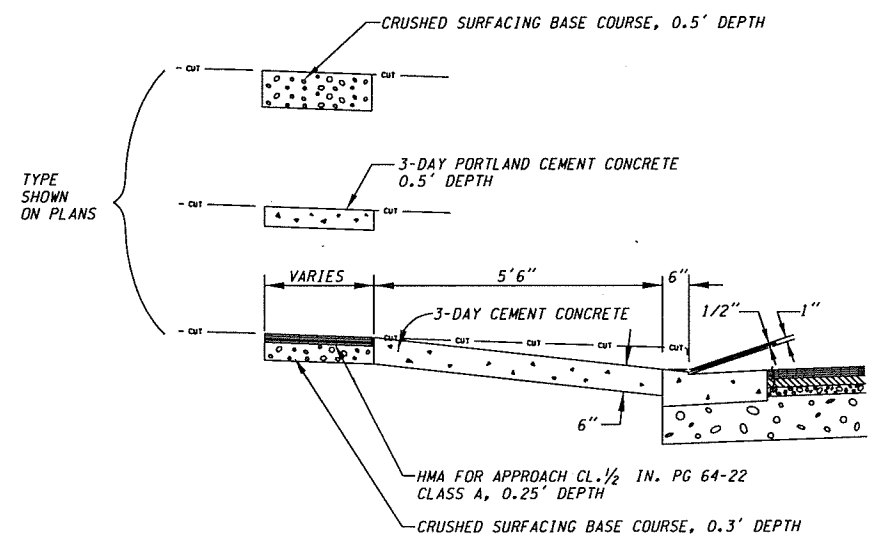

SECTION A-A

NTS

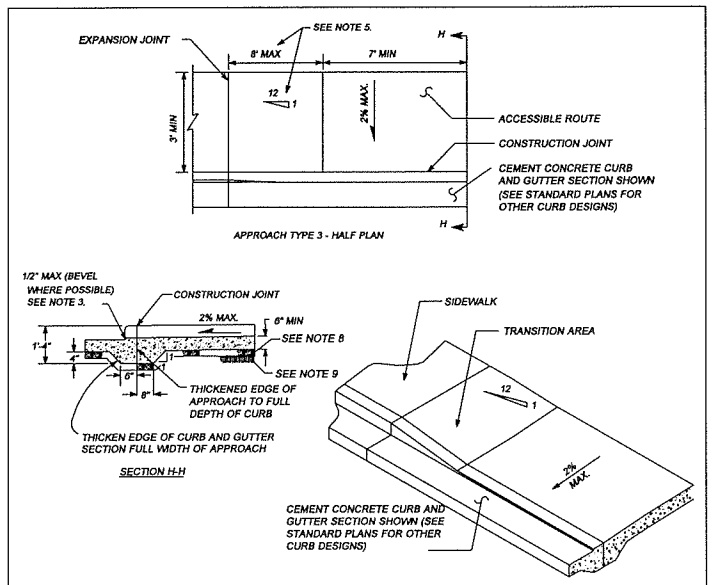

NOTES:

1. A MINIMUM 3' WIDE ACCESSIBLE ROUTE SHALL BE MAINTAINED IN ALL PEDESTRIAN ACCESSIBLE AREAS.
2. CONTRACTION JOINTS SHALL BE PLACED ALONG SIDEWALKS IN ACCORD WITH SIDEWALK DETAIL. ALL JOINTS SHALL BE CLEANED AND EDGED.
3. CHANGES IN LEVEL UP TO 1/4" MAY BE VERTICAL AND WITHOUT EDGE TREATMENT. CHANGES IN LEVEL BETWEEN 1/4" AND 1/2" SHALL BE BEVELED WITH A SLOPE NO GREATER THAN 2:1.
4. TRANSITION AREA TO BE SLOPED AT 1v TO 12h, UNLESS STREET GRADE WOULD CREATE A TRANSITION LENGTH GREATER THAN 8', THEN THE MAXIMUM LENGTH OF 8' GOVERNS SLOPE.
5. CEMENT CONCRETE APPROACHES SHALL BE CONSTRUCTED OF AIR-ENTRAINED CONCRETE CLASS 3000 AND MAY BE POURED INTEGRAL WITH CURB.
6. EXISTING CURB, GUTTER AND SIDEWALK TO BE SAWCUT AND REMOVED FOR INSTALLATION OF APPROACH.
7. COMMERCIAL DRIVEWAY REQUIRES REINFORCING STEEL (6"x6"x10 GA MESH) MIN. 3" COVER.
8. 3" DEPTH 3/4"-0 CRUSHED AGGREGATE BASE COMPACTED TO 95% OF MAX. DRY DENSITY.
9. SUBGRADE PREPARED PER WSDOT STD. SPEC. 2-06.3(1)

NO	REVISIONS	DATE	BY
1	NOTE # 2, 6, 8	7/24/02	SCH

DWG. F16.dwg

Department of Public Works
CLARK COUNTY WASHINGTON

CEMENT CONCRETE APPROACH
DETAIL - TYPE 3

APPROVED

Peter Capell 8/22/00
COUNTY ENGINEER DATE

F16

DESIGNED DB
DRAWN KB
DATE 7/24/02

90% PLANS
PRELIMINARY

DESIGNED	PW
DRAWN	PW
CRP	321222
HOR.	N/A
VERT.	N/A
DATE	11/04
DWG:	RD1
SHEET	15 OF 105

CALL 48 HOURS BEFORE YOU DIG
1-800-553-4344
"It's the Law"
NORTHWEST UTILITIES NOTIFICATION CENTER

DESIGN & ENGINEERING DIVISION
DESIGN SECTION

BETTS BRIDGE #26 REPLACEMENT (SALMON CREEK AVE.)
DRIVEWAY DETAILS

proud past, promising future
CLARK COUNTY WASHINGTON

FEDERAL AID # BRM-4231(004)

PLOT11

NOTES:

1. EXISTING CURB, GUTTER, AND SIDEWALK TO BE SAWCUT AND REMOVED FOR INSTALLATION OF NEW RAMP.

2. RAMPS TO BE POURED SEPARATELY FROM SIDEWALK.

3. RAMP SLOPES SHALL NOT BE STEEPER THAN 12H:1V.

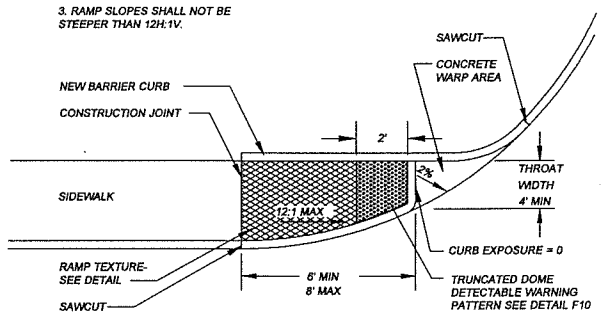

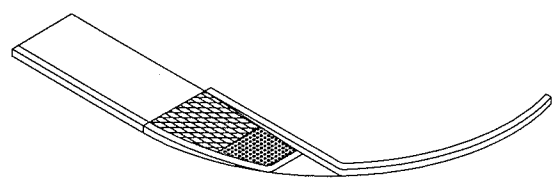

THIS TYPE OF RAMP IS ONLY TO BE USED IN EXISTING RESTRICTED RIGHT-OF-WAY AREAS.

NO.	REVISIONS	DATE	BY
1	TRUNCATED DOME PATTERN	8/15/03	SCH

DWG: F6.dwg

Department of Public Works
CLARK COUNTY WASHINGTON

TYPE 6 RAMP

APPROVED
Peter Capen
COUNTY ENGINEER
8/22/00
DATE

F6

DESIGNED DB
DRAWN RB
DATE 10/4/00

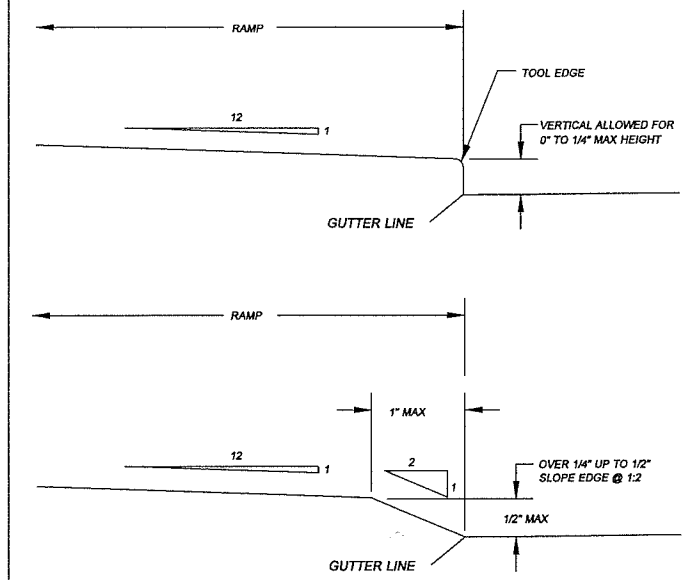

CHANGES UP TO 1/4" MAY BE VERTICAL AND WITHOUT EDGE TREATMENT. CHANGES IN LEVEL GREATER THAN 1/4" UP TO 1/2" SHALL HAVE THE WHOLE VERTICAL CHANGE BEVELED WITH A SLOPE NO GREATER THAN 2:1.

NO.	REVISIONS	DATE	BY

DWG: 10.dwg

Department of Public Works
CLARK COUNTY WASHINGTON

RAMP LIP DETAIL

APPROVED
Peter Capen
COUNTY ENGINEER
8/22/00
DATE

10

DESIGNED DB
DRAWN RB
DATE 10/4/00

NOTES:

1. RAMP TO BE 1:12 SLOPE. IF LENGTH EXCEEDS 8 FEET, THEN END RAMP AT 8 FEET.
2. EXISTING CURB AND SIDEWALK TO BE SAWCUT AND REMOVED FOR INSTALLATION OF NEW RAMP.
3. RAMP MAY BE USED MID BLOCK OR ON INTERSECTION RADIUS.
4. RAMP TO BE CENTERED IN CROSSWALK
5. RAMPS TO BE CONSTRUCTED SEPARATELY.
6. SEE STANDARD LANDING CROSS SECTION DETAIL FOR SECTIONS A-A AND B-B.
7. RAMP SLOPES SHALL NOT BE STEEPER THAN 12H:1.

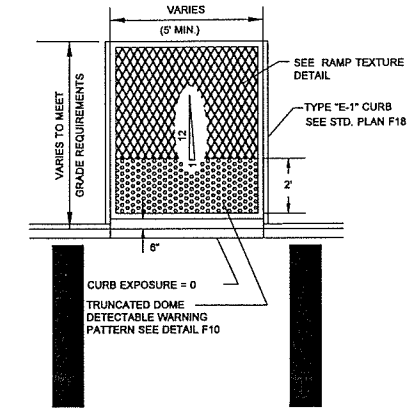

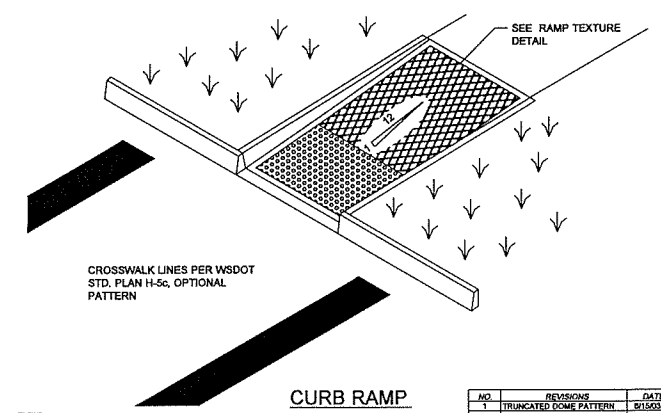

CURB RAMP

NO	REVISIONS	DATE	BY
1	TRUNCATED DOME PATTERN	8/15/03	SCH

DWG: F7.DWG

Department of Public Works
CLARK COUNTY WASHINGTON
proud past, promising future

CURB RAMP

APPROVED
Peter Capen
COUNTY ENGINEER
01/01/04
DATE

F7

DESIGNED SCH
DRAWN SCH
DATE 07/31/02

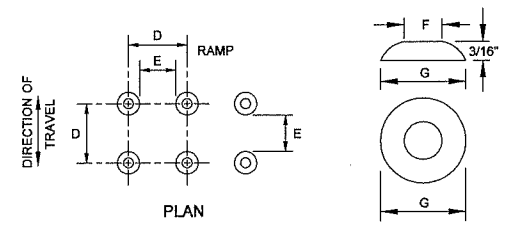

PLAN

TRUNCATED DOME DETAIL

	MIN.	MAX.
D	1 5/8"	2 3/8"
E	5/8"	1 1/2"
F	7/16"	3/4"
G	7/8"	1 7/16"

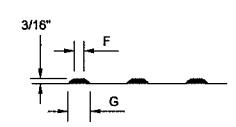

ELEVATION

TRUNCATED DOMES (SEE NOTE 2)
DETECTABLE WARNING
PATTERN DETAIL

NOTES

1. AVOID PLACING DRAINAGE STRUCTURES, JUNCTION BOXES OR OTHER OBSTRUCTIONS IN FRONT OF RAMP ACCESS AREA.

2. THE DETECTABLE WARNING PATTERNS CAN BE CREATED BY ACCEPTABLE MEANS THAT WILL ACHIEVE THE TRUNCATED DOME DIMENSIONS AND SPACING SHOWN.

3. PLACE TRUNCATED DOME DETECTABLE WARNING TEXTURE IN THE LOWER 24" OF THE THROAT OF THE RAMP ONLY. ARRANGE DOMES USING IN-LINE PATTERN ONLY AS SHOWN. COLOR OF TEXTURE (COATING) SHALL BE SAFETY YELLOW IN COMPLIANCE WITH WSDOT STD. SPEC. OR AS INSTRUCTED BY COUNTY INSPECTOR.

4. FOR CONSTRUCTION OF SIDEWALK RAMPS OUTSIDE OF PUBLIC RIGHT-OF-WAY, CHECK WITH STATE BUILDING CODES.

NO	REVISIONS	DATE	BY

DWG: F10.DWG

Department of Public Works
CLARK COUNTY WASHINGTON
proud past, promising future

TRUNCATED DOME
DETECTABLE WARNING PATTERN

APPROVED
Peter Capen
COUNTY ENGINEER
01/01/04
DATE

STANDARD
F10
PLAN No.

DESIGNED SCH
DRAWN SCH
DATE 8/15/03

DESIGNED	PW
DRAWN	PW
CRP	321222
HOR.	N/A
VERT.	N/A
DATE	11/04
DWG:	R02
SHEET	16 OF 105

CALL 48 HOURS BEFORE YOU DIG
1-800-553-4344
"It's the Law"
NORTHWEST UTILITIES NOTIFICATION CENTER

DESIGN & ENGINEERING DIVISION
DESIGN SECTION

BETTS BRIDGE #26 REPLACEMENT (SALMON CREEK AVE.)
RAMP DETAILS

90% PLANS
PRELIMINARY

proud past, promising future
CLARK COUNTY WASHINGTON

FEDERAL AID # BRM-4231(004)

PLOT12

JOINT SPACING:

SURFACE JOINTS - 5'
CONTROL JOINTS - 15'
EXPANSION JOINTS AT, STRUCTURES, OBSTRUCTIONS, OR AS DIRECTED BY THE INSPECTOR.

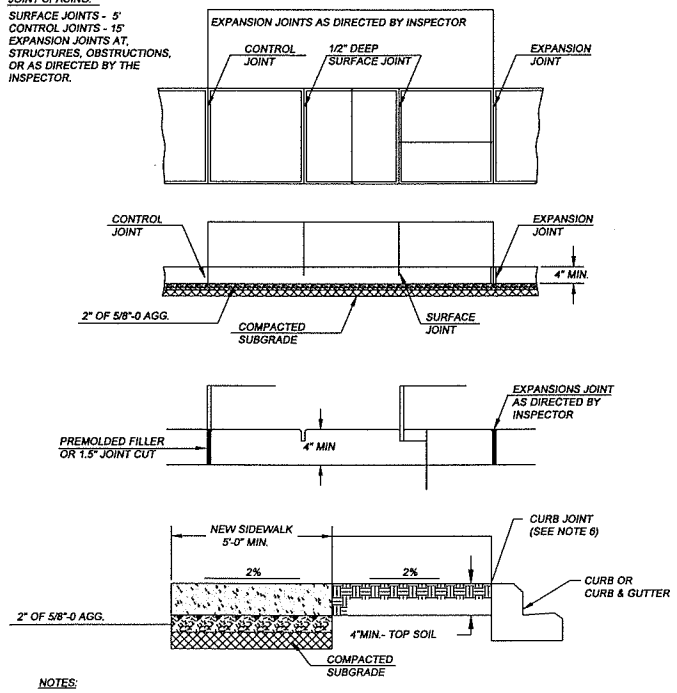

NOTES:

1. CONCRETE SHALL BE 3,000 PSI MIN. (CLASS 3000), 3 1/2" SLUMP (± 1")
2 FINISH SHALL BE MEDIUM BROOM PERPENDICULAR TO PEDESTRIAN TRAFFIC UNLESS OTHERWISE DIRECTED.
3. ALL EXISTING EDGES SHALL BE SAWCUT.
4. NO FILLER REQUIRED FOR SURFACE JOINTS.
5. ALL JOINTS AND EDGES SHALL BE FINISHED WITH 1/4" RADIUS EDGER (3" SMOOTH EACH SIDE)
6. FOR SIDEWALKS ADJACENT TO THE CURB AND POURED AT THE SAME TIME AS THE CURB, THE JOINT BETWEEN THEM SHALL BE A TROWELED JOINT WITH A MIN. 1/2" RADIUS.

NO.	REVISIONS	DATE	BY
1	CHANGE SUBGRADE &	03/28/02	KB
2	▼ 2" BASE AGG. & NOTES	10/07/02	SCH

DWG: F12.dwg

Department of Public Works
CLARK COUNTY WASHINGTON
proud past, promising future

SIDEWALK DETAIL

STANDARD F12

APPROVED
Peter Capell — COUNTY ENGINEER — 01/01/04 DATE

PLAN No.
DESIGNED DB
DRAWN KB
DATE 10/08/02

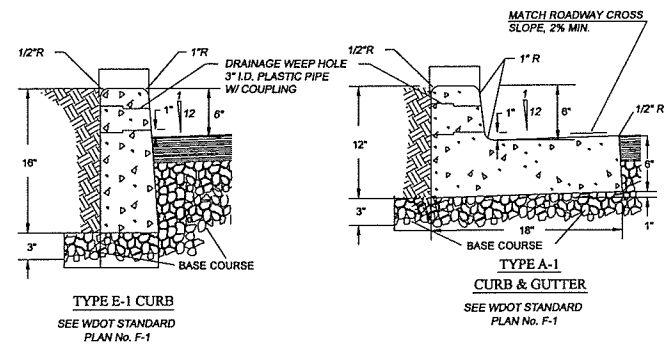

TYPE E-1 CURB

SEE WDOT STANDARD PLAN No. F-1

TYPE A-1 CURB & GUTTER

SEE WDOT STANDARD PLAN No. F-1

NOTES

1. CONCRETE SHALL BE 3000 PSI MIN. (CLASS 3000) 3 1/2" SLUMP (MAX.)
2. CURBS ADJACENT TO PAVEMENT OR SIDEWALK TO HAVE EXPANSION AND/OR CONTRACTION JOINTS TO MATCH EXISTING PATTERNS.
3. 3/8" EXPANSION JOINTS TO BE PROVIDED AT EACH POINT OF TANGENCY OF THE CURB, COLD JOINTS, EACH SIDE OF INLET STRUCTURES AND DRIVEWAYS. MATERIAL TO BE PRE-MOLDED, ASPHALT IMPREGNATED AND NON EXTRUDING.
4. CONTRACTION JOINT SPACING NOT TO EXCEED 15 FEET. THE DEPTH OF THE JOINT SHALL BE AT LEAST 1-1/2 INCHES. WEEP HOLES TO BE CENTERED WITH CONTRACTION JOINTS.
5. BASE COURSE SHALL BE TO SUBGRADE OF STREET SECTION OR 3 INCHES, WHICHEVER IS GREATER, AND SHALL EXTEND 6" BEHIND THE CURB.
6. DRAINAGE WEEP HOLES TO BE 3" I.D. PLASTIC PIPE WITH COUPLING. FINISH PIPE END FLUSH WITH FACE OF CURB.
7. GROUT ANY VOIDS IN CONCRETE SURROUNDING PIPE.
8. DRAINAGE ACCESS THROUGH EXISTING CURBS SHALL BE CORE DRILLED.
9. CURB TO BE BRUSH FINISHED. ALL EXISTING EDGES SHALL BE SAWCUT.
10. ALL MATERIALS AND WORKMANSHIP FOR TYPE E-1 & A-1 SHALL BE IN ACCORDANCE WITH WDOT STANDARD PLAN No. F-1, APPROVED 7/18/97 OR MOST CURRENT REVISION.

NO.	REVISIONS	DATE	BY

DWG: F18.DWG

Department of Public Works
CLARK COUNTY WASHINGTON
proud past, promising future

CONCRETE CURBS

STANDARD F18

APPROVED
Peter Capell — COUNTY ENGINEER — 01/01/04 DATE

PLAN No.
DESIGNED SCH
DRAWN SCH
DATE 01/24/02

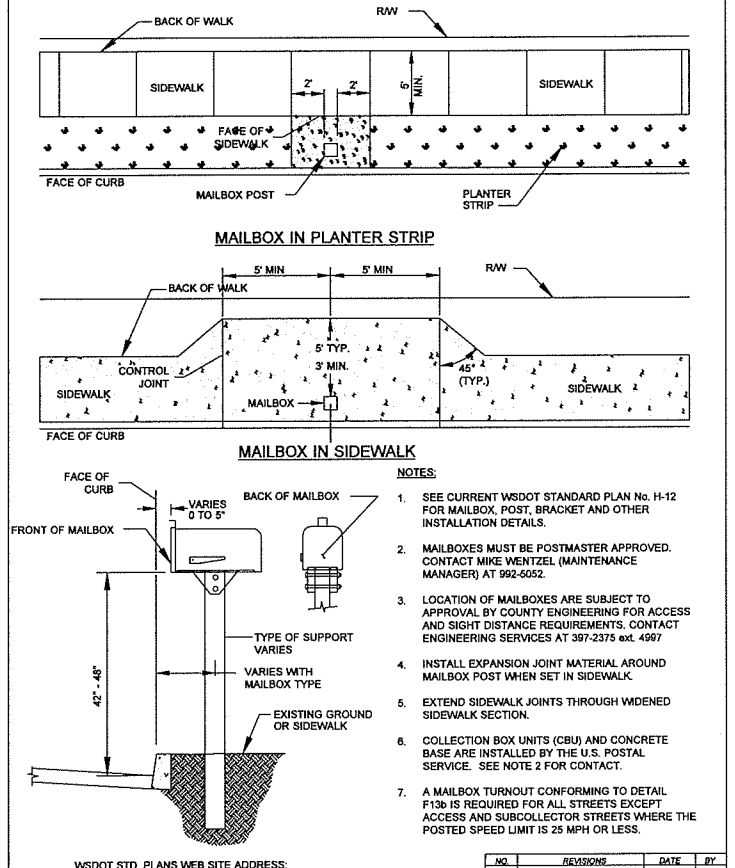

NOTES:

1. SEE CURRENT WSDOT STANDARD PLAN No. H-12 FOR MAILBOX, POST, BRACKET AND OTHER INSTALLATION DETAILS.
2. MAILBOXES MUST BE POSTMASTER APPROVED. CONTACT MIKE WENTZEL (MAINTENANCE MANAGER) AT 992-6052.
3. LOCATION OF MAILBOXES ARE SUBJECT TO APPROVAL BY COUNTY ENGINEERING FOR ACCESS AND SIGHT DISTANCE REQUIREMENTS. CONTACT ENGINEERING SERVICES AT 397-2375 ext. 4997
4. INSTALL EXPANSION JOINT MATERIAL AROUND MAILBOX POST WHEN SET IN SIDEWALK.
5. EXTEND SIDEWALK JOINTS THROUGH WIDENED SIDEWALK SECTION.
6. COLLECTION BOX UNITS (CBU) AND CONCRETE BASE ARE INSTALLED BY THE U.S. POSTAL SERVICE. SEE NOTE 2 FOR CONTACT.
7. A MAILBOX TURNOUT CONFORMING TO DETAIL F13b IS REQUIRED FOR ALL STREETS EXCEPT ACCESS AND SUBCOLLECTOR STREETS WHERE THE POSTED SPEED LIMIT IS 25 MPH OR LESS.

WSDOT STD. PLANS WEB SITE ADDRESS:
http://www.wsdot.wa.gov/eesc/design/designstandards/HTM/TOC.pdf

NO.	REVISIONS	DATE	BY

DWG: F13.DWG

Department of Public Works
CLARK COUNTY WASHINGTON
proud past, promising future

SIDEWALK MAILBOX PLACEMENT

STANDARD F13

APPROVED
Peter Capell — COUNTY ENGINEER — 01/01/04 DATE

PLAN No.
DESIGNED SCH
DRAWN SCH
DATE 01/24/02

90% PLANS
PRELIMINARY

FEDERAL AID # BRM-4231(004)

PLOT13

DESIGNED	PW
DRAWN	PW
CRP	321222
HOR.	N/A
VERT.	N/A
DATE	11/04
DWG:	R03
SHEET	13 OF 105

CALL 48 HOURS BEFORE YOU DIG
1-800-553-4344
"It's the Law"
NORTHWEST UTILITIES NOTIFICATION CENTER

DESIGN & ENGINEERING DIVISION
DESIGN SECTION

BETTS BRIDGE #26 REPLACEMENT (SALMON CREEK AVE.)
CURB & SIDEWALK DETAILS

proud past, promising future
CLARK COUNTY WASHINGTON

FOR USE AT POINTS OF TANGENCY

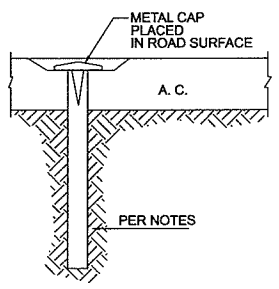

FOR USE IN INTERSECTIONS

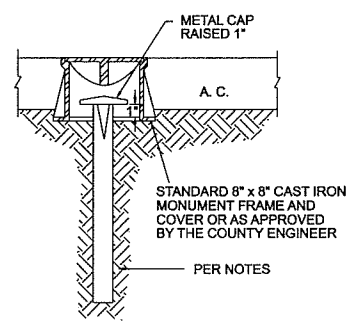

NOTES:

1. ALL MONUMENTS SHALL USE EITHER 5/8" DIAMETER x 30" LONG IRON ROD OR 3/4" DIAMETER x 30" LONG IRON PIPE.
2. ALL MONUMENTS SHALL BE IN ACCORDANCE WITH WAC 196-24-110 AND 332-120-060, AND MEET THE REQUIREMENTS OF THE RCW 58.17.240, 58.09.120 AND 58.09.130.

NO.	REVISIONS	DATE	BY

DWG: F28.DWG

Department of Public Works
CLARK COUNTY WASHINGTON
proud past, promising future

CENTERLINE MONUMENTS

APPROVED
Peter Capell — COUNTY ENGINEER — 01/01/04 DATE

F28
DESIGNED SCH
DRAWN SCH
DATE 07/06/02

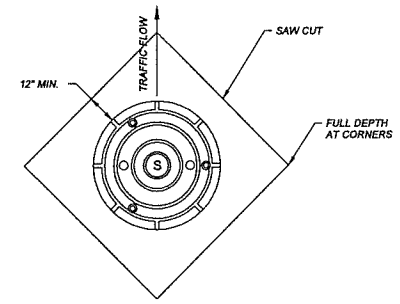

PLAN VIEW

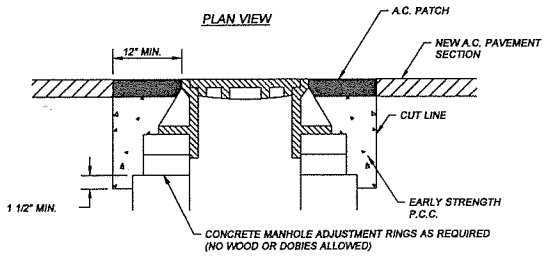

STEPS 2,3, & 4

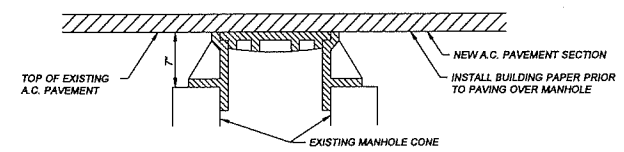

STEP 1

STEP 1 COVER EXSITING MANHOLE WITH BUILDING PAPER AND CONSTRUCT A.C. PAVEMENT OVER TOP OF MANHOLE.
STEP 2 SAW CUT AND REMOVE PAVEMENT AROUND MANHOLE 12" MIN. FROM MANHOLE FRAME.
STEP 3 RAISE MANHOLE FRAME AND COVER USING CONCRETE RINGS AND MECHANICAL ADJUSTMENT DEVICES TO FINISH GRADE MATCHING PROFILE AND CROSS SLOPE.
STEP 4 BACKFILL WITH EARLY STRENGTH P.C.C. AND A.C. TO DEPTHS AS DIRECTED.

NO.	REVISIONS	DATE	BY

DWG: F27.dwg

Department of Public Works
CLARK COUNTY WASHINGTON

MANHOLE ADJUSTMENT DETAIL

APPROVED
Peter Capell — COUNTY ENGINEER — 9/12/00 DATE

F27
DESIGNED
DRAWN
DATE 7/06/00

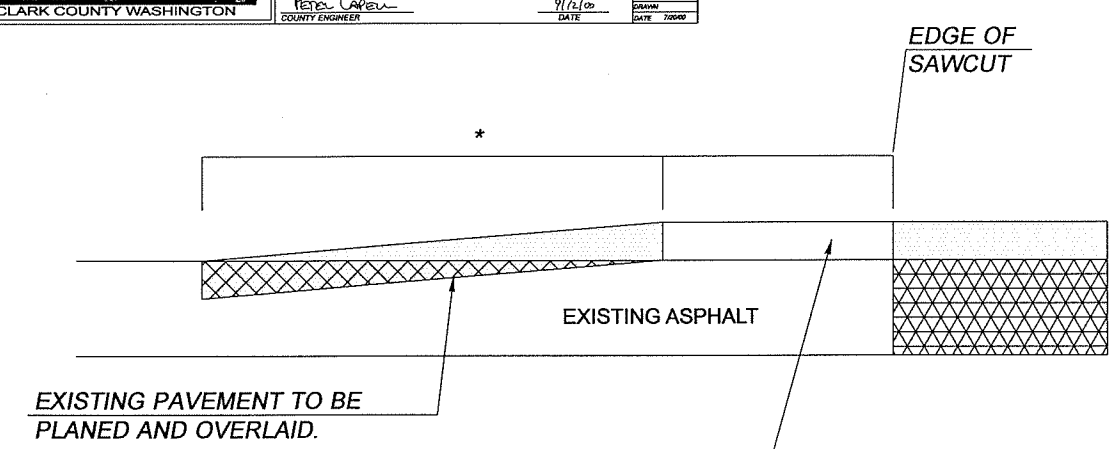

* LENGTH VARIES TO MAKE SMOOTH TRANSITION TO EXISTING ROAD GRADE. (MINIMUM 15 FEET)

PLANING BITUMINOUS PAVEMENT DETAIL

90% PLANS
PRELIMINARY

FEDERAL AID # BRM-4231(004)

PL0T3

DESIGNED	PW
DRAWN	PW
CRP	321222
HOR.	N/A
VERT.	N/A
DATE	11/04
DWG:	RD4
SHEET 18 OF 105	

CALL 48 HOURS BEFORE YOU DIG
1-800-553-4344
"It's the Law"
NORTHWEST UTILITIES NOTIFICATION CENTER

DESIGN & ENGINEERING DIVISION
DESIGN SECTION

BETTS BRIDGE #26 REPLACEMENT (SALMON CREEK AVE.)
MISCELLANEOUS DETAILS

proud past, promising future
CLARK COUNTY WASHINGTON

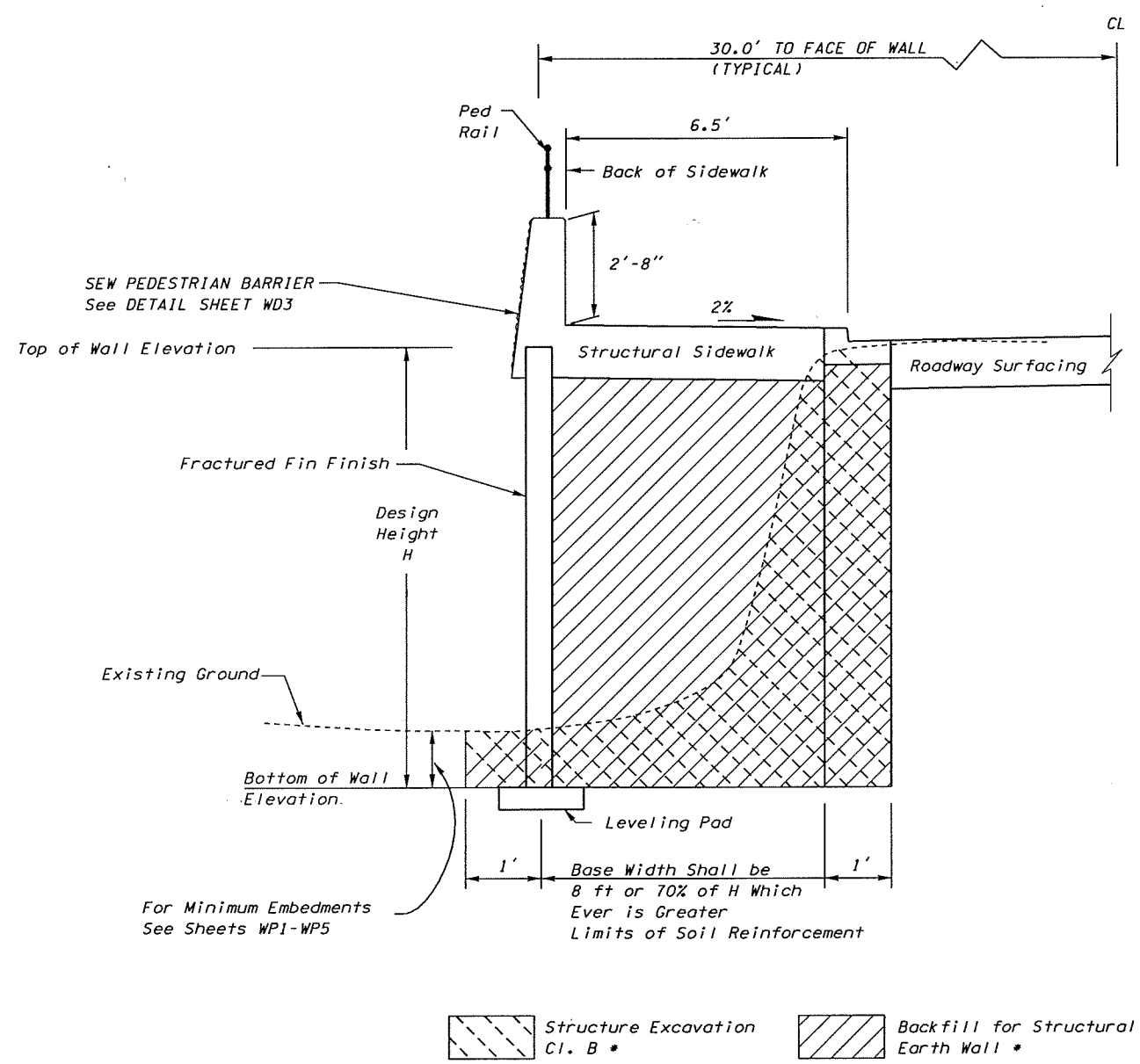

* Items included in payment of wall per Sq. Ft.

TYPICAL SECTION

STRUCTURAL EARTH WALL WITH PEDESTRIAN BARRIER AND STRUCTURAL SIDEWALK

90% PLANS
PRELIMINARY

DESIGNED	PW
DRAWN	PW
CRP	321222
HOR.	N/A
VERT.	N/A
DATE	11/04
DWG:	WD1
SHEET 19	OF 105

CALL 48 HOURS BEFORE YOU DIG
1-800-553-4344
"It's the Law"
NORTHWEST UTILITIES NOTIFICATION CENTER

DESIGN & ENGINEERING DIVISION
DESIGN SECTION

BETTS BRIDGE #26 REPLACEMENT (SALMON CREEK AVE.)
WALL DETAILS

proud past, promising future
CLARK COUNTY WASHINGTON

FEDERAL AID # BRM-4231(004)

PLOT5

Base Leveling Pad Notes:

1. The leveling pad is to be constructed of crushed stone or 2,000 psi± unreinforced concrete
2. The base foundation is to be approved by the site geotechnical engineer prior to placement of the leveling pad.

Cap Unit	
Width:	18"
*Depth:	10 1/2"
Height:	4"
*Weight:	45 lbs

Standard Unit	
Width:	18"
*Depth:	21 1/2"
Height:	8"
*Weight:	115 lbs

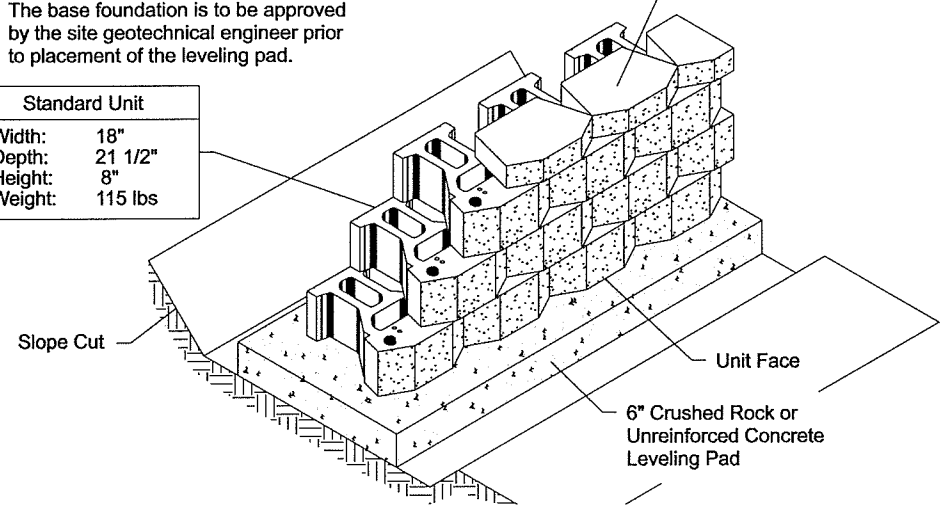

Standard Unit/Base Pad Isometric View

*Dimensions & Weight May Vary by Region

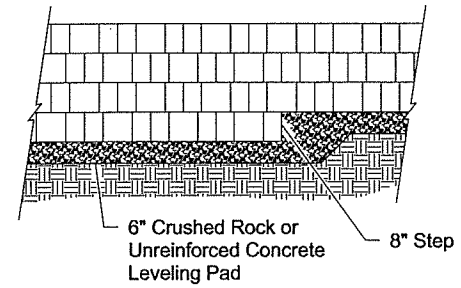

Elevation

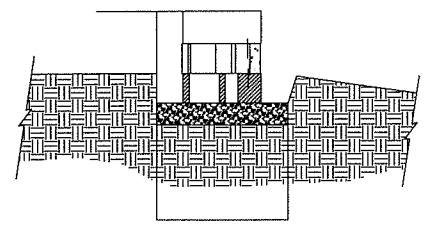

Section

Leveling Pad Detail

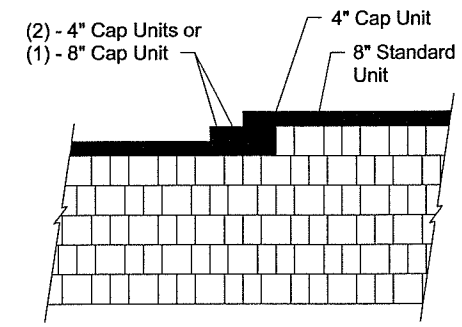

Top of Wall Steps

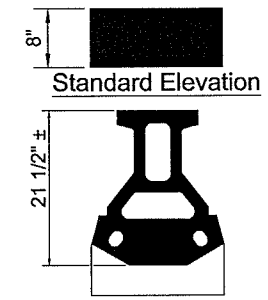

Standard Elevation

Standard Plan

Standard Unit

• Dimensions May Vary by Region

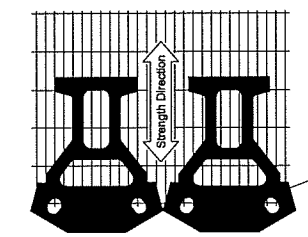

Grid & Pin Connection

Geogrid is to be Placed on Level Backfill and Extended Over the Fiberglass Pins. Place Next Unit. Pull Grid Taught and Backfill. Stake as required.

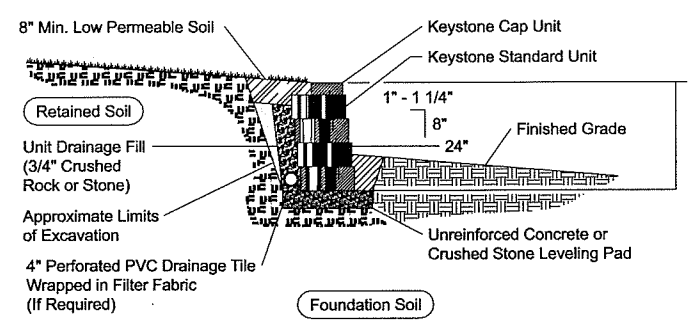

Typical Gravity Wall Section

Standard Unit - 1" Setback

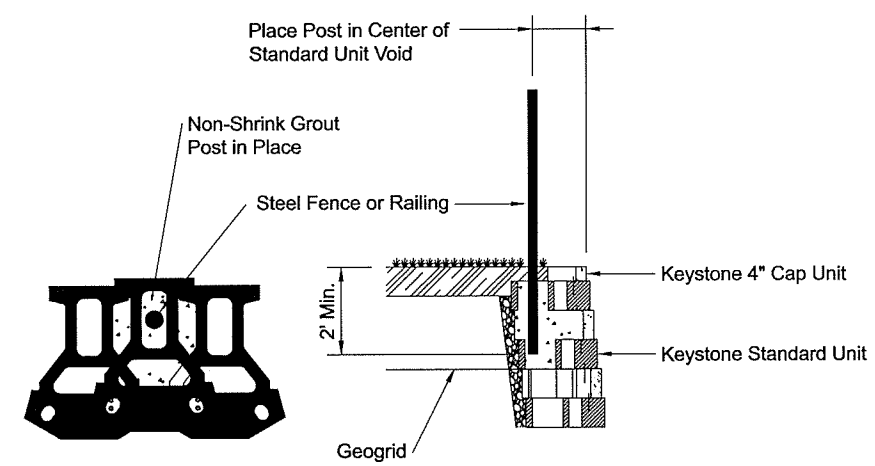

Fence Section & Plan Detail

Standard Unit - 1" Setback

90% PLANS
PRELIMINARY

DESIGNED PW
DRAWN PW
CRP 321222
HOR. N/A
VERT. N/A
DATE 11/04
DWG: WD2
SHEET 20 OF 105

CALL 48 HOURS BEFORE YOU DIG 1-800-553-4344 "It's the Law" NORTHWEST UTILITIES NOTIFICATION CENTER

DESIGN & ENGINEERING DIVISION
DESIGN SECTION

BETTS BRIDGE #26 REPLACEMENT (SALMON CREEK AVE.)
WALL DETAILS

proud past, promising future
CLARK COUNTY WASHINGTON

FEDERAL AID # BRM-4231(004)

PLOT5

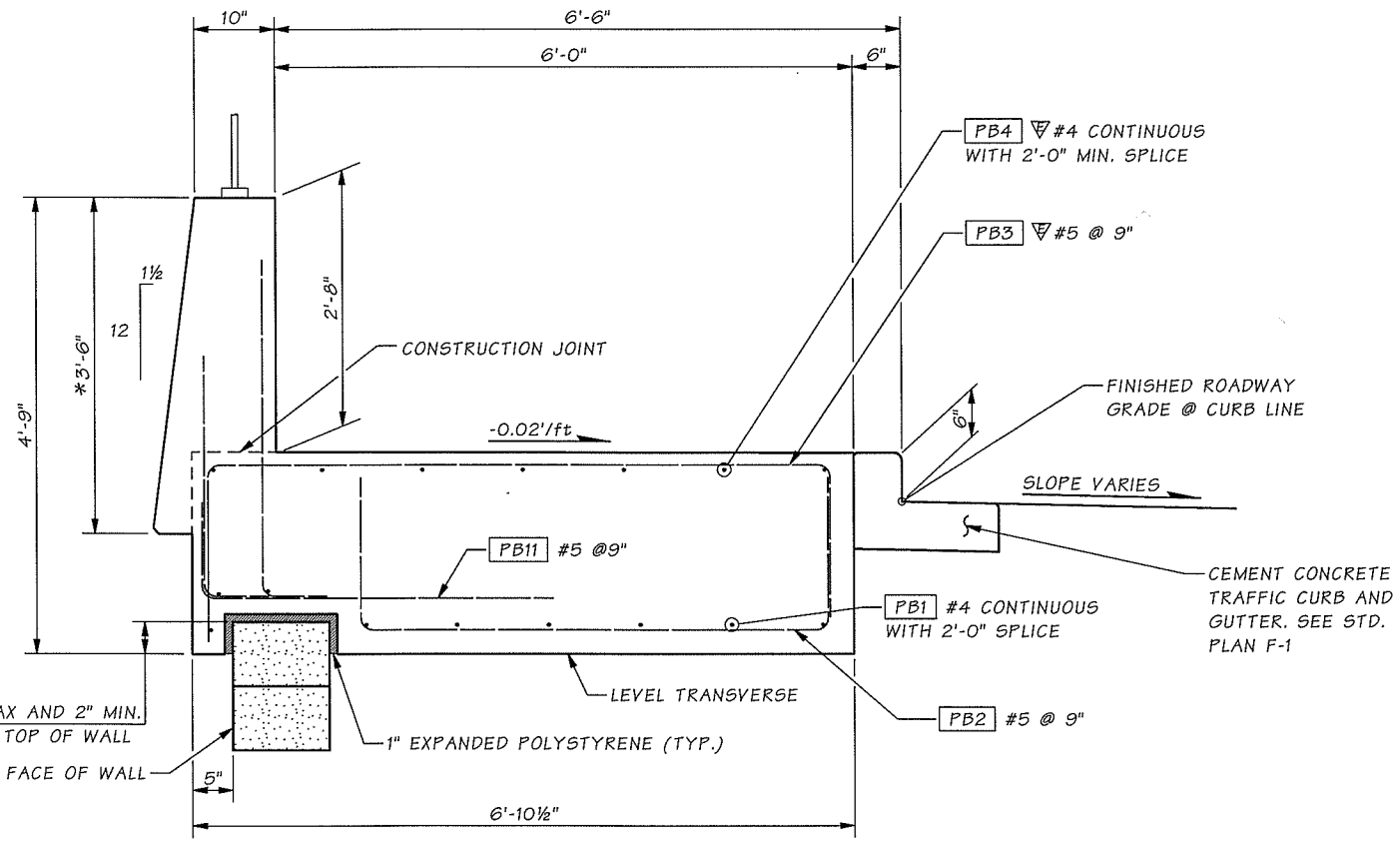

PEDESTRIAN BARRIER WITH STRUCTURAL SIDEWALK ON STRUCTURAL EARTH WALL

* ADJUST DIMENSION SO BOTTOM OF BARRIER ON STRUCTURAL SIDEWALK MATCHES THE BOTTOM OF BARRIER ON THE APPROACH SLAB.

SR 999 JOB NO. ____ SHEET 0

Bridge Design Engr.	Kapur, J		M:\Y-Team\Clark County Betts Bridge\Window files\MOMENT SLAB.WND								
Supervisor	Kapur, J						REGION NO.	STATE	FED. AID PROJ. NO.	SHEET NO.	TOTAL SHEETS
Designed By	MINNS, GEC	11/04					10	WASH.	BRM-4231(004)		
Checked By	Mizumori, A	11/04					JOB NUMBER				
Detailed By	Evans, P.D.	11/04									
Bridge Projects Engr.											
Prelim. Plan By											
Architect/Specialist			DATE	REVISION	BY	APP'D					

Thu Nov 04 15:12:01 2004

GARY E.C. MINNS — STATE OF WASHINGTON — 10796 — REGISTERED PROFESSIONAL ENGINEER — EXPIRES 1/22/06

BRIDGE AND STRUCTURES OFFICE

JUGESH KAPUR — STATE OF WASHINGTON — 25400 — REGISTERED PROFESSIONAL ENGINEER — EXPIRES 5/19/06

Washington State Department of Transportation

SALMON CREEK AVENUE
BETTS BRIDGE REPLACEMENT

SEW PEDESTRIAN BARRIER DETAILS

BRIDGE SHEET NO. WD3

SHEET 21 OF 105 SHEETS

WALL NO. 1
SEE SHEET PP1

(STRUCTURAL EARTH WALL)

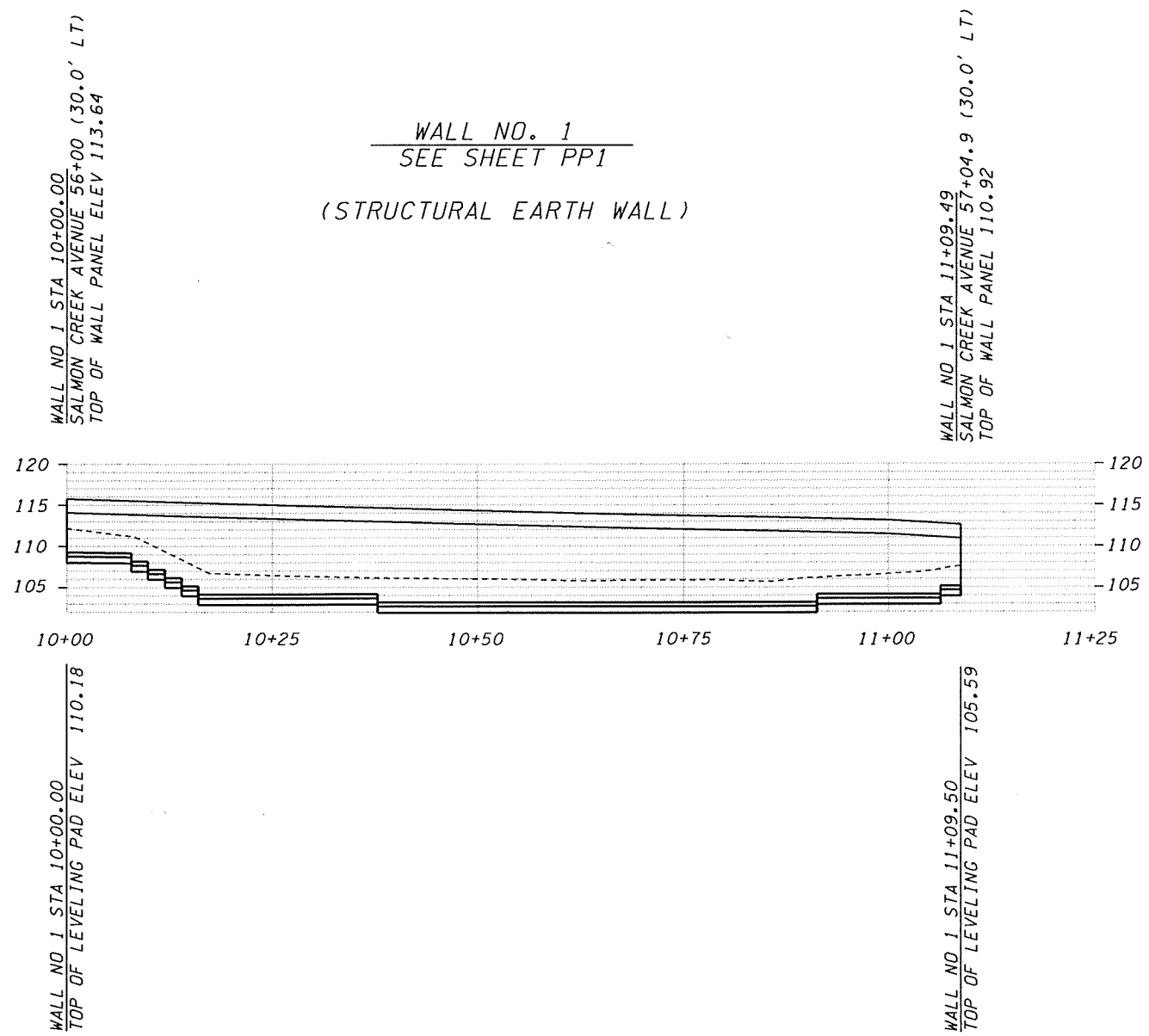

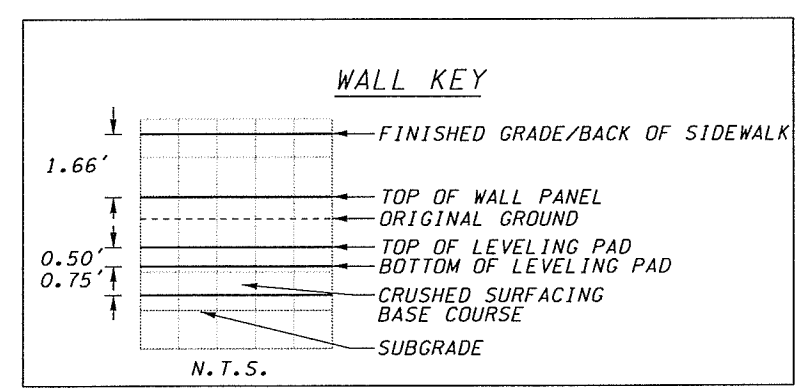

NOTES:
1. SEE WALL DETAILS, SHEET WD1
2. MINIMUM WALL EMBEDMENT SHALL BE 2'

FEDERAL AID # BRM-4231(004)

PLOT1

90% PLANS
PRELIMINARY

CALL 48 HOURS BEFORE YOU DIG
1-800-553-4344
"It's the Law"
NORTHWEST UTILITIES NOTIFICATION CENTER

DESIGNED	PW
DRAWN	PW
CRP	321222
HOR.	1" = 20'
VERT.	1" = 20'
DATE	11/04
DWG:	WP1
SHEET	22 OF 105

DESIGN & ENGINEERING DIVISION
DESIGN SECTION

BETTS BRIDGE #26 REPLACEMENT (SALMON CREEK AVE.)
WALL PROFILE

proud past, promising future
CLARK COUNTY
WASHINGTON

WALL NO 2 STA 10+00.00
SALMON CREEK AVENUE 57+45 (30.0' LT)
TOP OF WALL PANEL ELEV 111.36

WALL NO. 2
SEE SHEET PP1

(STRUCTURAL EARTH WALL)

WALL NO 2 STA 11+25.25
SALMON CREEK AVENUE 58+70.25(30.0' LT)
TOP OF WALL PANEL ELEV 110.70

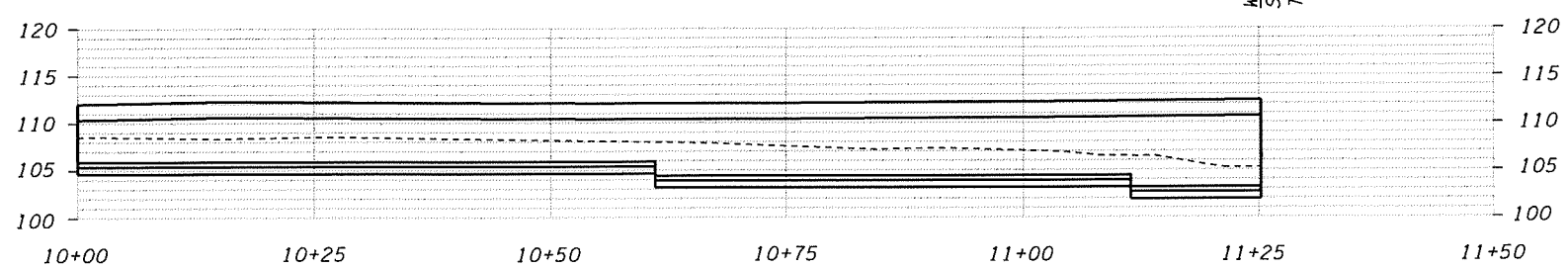

WALL NO. 2 STA 10+00.00
TOP OF LEVELING PAD ELEV 105.91

WALL NO 2 STA 11+25.25
TOP OF LEVELING PAD ELEV 103.16

NOTES:
1. SEE RETAINING DETAILS, SHEET WD1
2. MINIMUM WALL EMBEDMENT SHALL BE 2'

WALL KEY

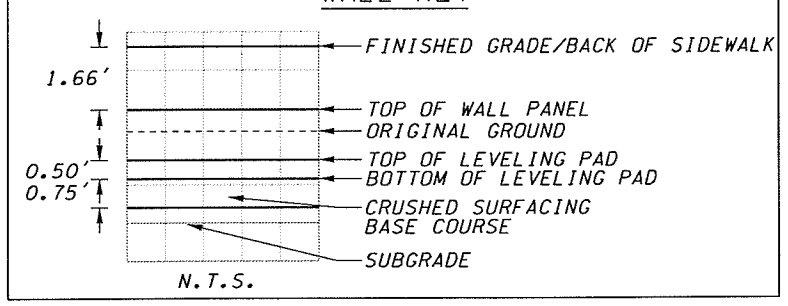

90% PLANS
PRELIMINARY

CALL 48 HOURS BEFORE YOU DIG
1-800-553-4344
"It's the Law"
NORTHWEST UTILITIES NOTIFICATION CENTER

DESIGNED	PW
DRAWN	PW
CRP	321222
HOR.	1" = 20'
VERT.	1" = 20'
DATE	11/04
DWG:	WP2
SHEET	23 OF 105

DESIGN & ENGINEERING DIVISION
DESIGN SECTION

BETTS BRIDGE #26 REPLACEMENT (SALMON CREEK AVE.)
WALL PROFILE

proud past, promising future
CLARK COUNTY WASHINGTON

FEDERAL AID # BRM-4231(004)

PLOT2

WALL NO. 3
SEE SHEET PP1

(STRUCTURAL EARTH WALL)

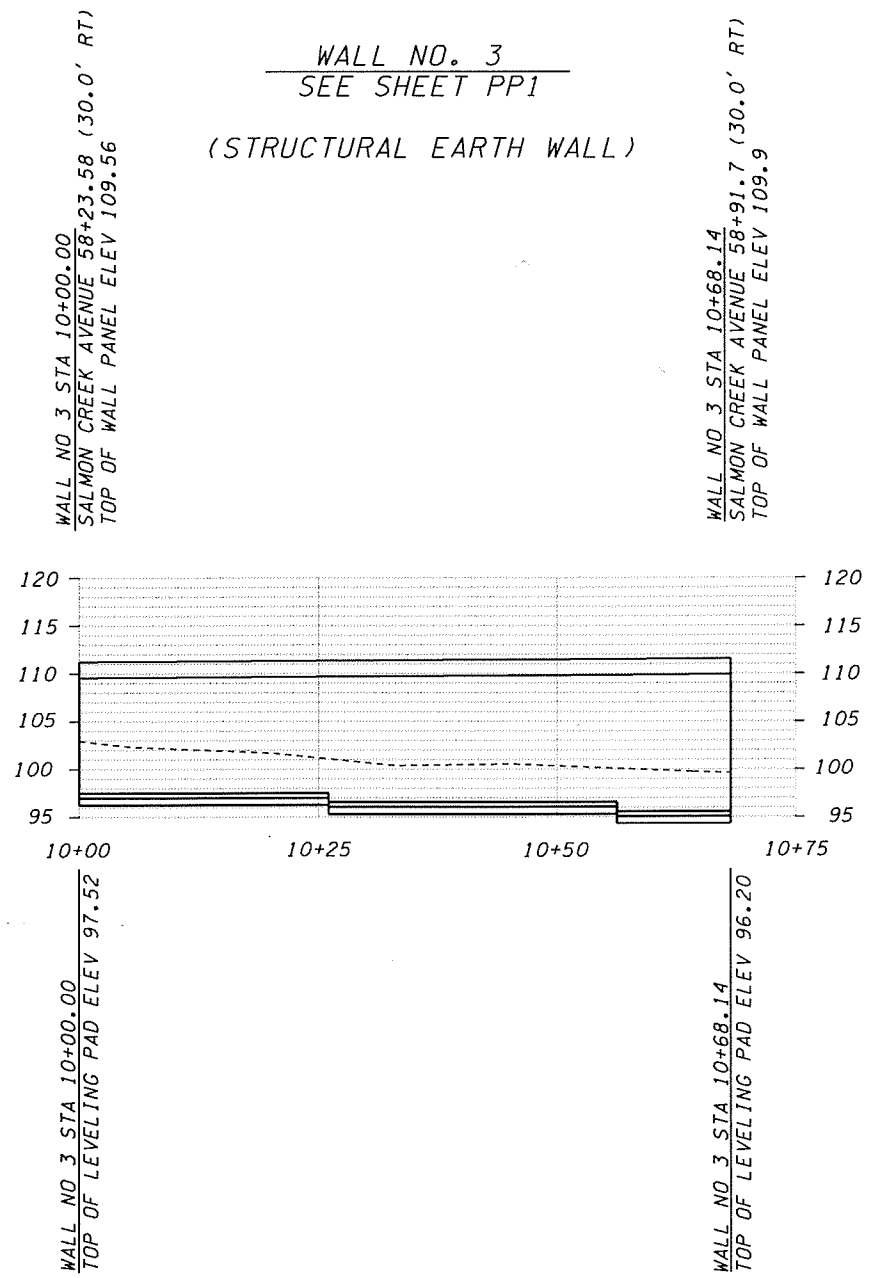

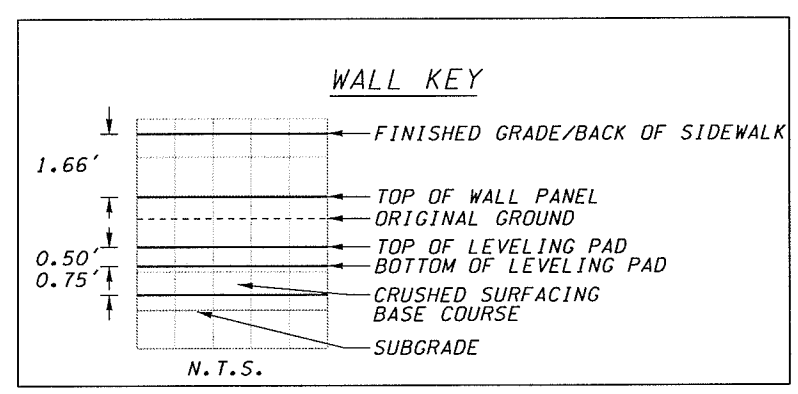

NOTES:
1. SEE RETAINING DETAILS, SHEET WD1
2. MINIMUM WALL EMBEDMENT SHALL BE 3.5',
TOP OF LEVELING PAD ELEV. SHALL BE NO HIGHER THAN 97.5' ELEV.

90% PLANS
PRELIMINARY

DESIGNED	PW
DRAWN	PW
CRP	321222
HOR.	1" = 20'
VERT.	1" = 20'
DATE	11/04
DWG:	WP3
SHEET	24 OF 105

CALL 48 HOURS BEFORE YOU DIG
1-800-553-4344
"It's the Law"
NORTHWEST UTILITIES NOTIFICATION CENTER

DESIGN & ENGINEERING DIVISION
DESIGN SECTION

BETTS BRIDGE #26 REPLACEMENT (SALMON CREEK AVE.)
WALL PROFILE

proud past, promising future
CLARK COUNTY
WASHINGTON

FEDERAL AID # BRM-4231(004)

PLOT3

WALL NO. 4
SEE SHEET PP2

(STRUCTURAL EARTH WALL)

WALL NO 4 STA 10+00.00
SALMON CREEK AVENUE 60+30.95 (30.0' RT)
TOP OF WALL PANEL ELEV 109.79

WALL NO 4 STA 11+33.55
SALMON CREEK AVENUE 61+82 (30.0' RT)
TOP OF WALL PANEL ELEV 108.98

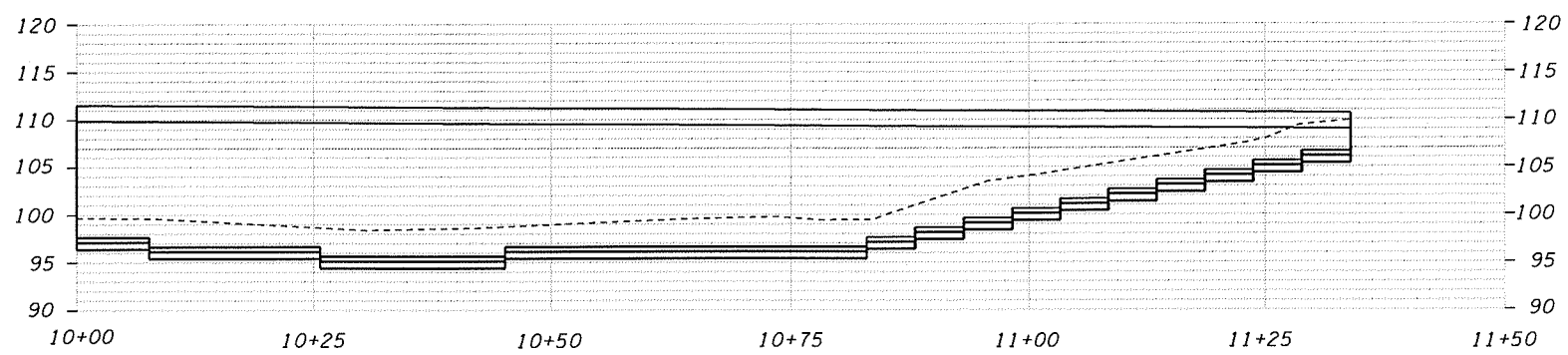

WALL NO 4 STA 10+00.00
TOP OF LEVLING PAD ELEV 97.64

WALL NO 4 STA 11+33.55
TOP OF LEVELING PAD ELEV 106.20

WALL KEY

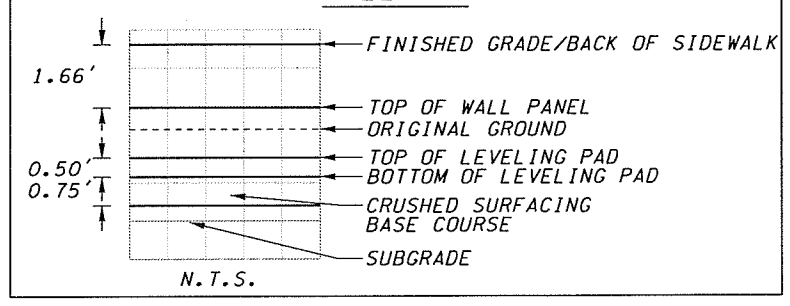

NOTES:

1. SEE RETAINING DETAILS, SHEET WD1
2. FROM WALL STA 10+00 TO 10+80, TOP OF LEVELING PAD ELEV SHALL BE NO HIGHER THAN 98.4' ELEV.
3. MINIMUM WALL EMBEDMENT SHALL BE 2'

90% PLANS
PRELIMINARY

CALL 48 HOURS BEFORE YOU DIG
1-800-553-4344
"It's the Law"
NORTHWEST UTILITIES NOTIFICATION CENTER

DESIGNED	PW
DRAWN	PW
CRP	321222
HOR.	1" = 20'
VERT.	1" = 20'
DATE	11/04
DWG:	WP4
SHEET	25 OF 105

DESIGN & ENGINEERING DIVISION
DESIGN SECTION

BETTS BRIDGE #26 REPLACEMENT (SALMON CREEK AVE.)
WALL PROFILE

proud past, promising future
CLARK COUNTY WASHINGTON

FEDERAL AID # BRM-4231(004)

PLOT4

WALL NO. 5
SEE SHEET PP2

(STRUCTURAL EARTH WALL)

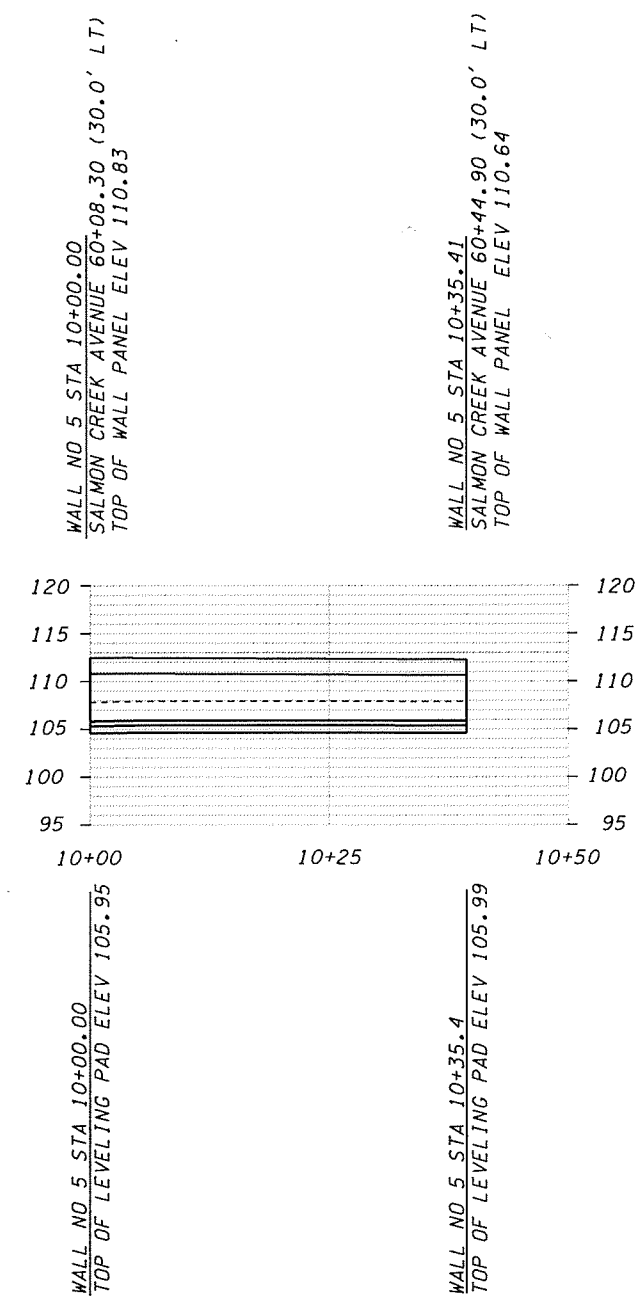

NOTES:
1. SEE RETAINING DETAILS, WD1
2. MINIMUM WALL EMBEDMENT SHALL BE 2'

WALL KEY

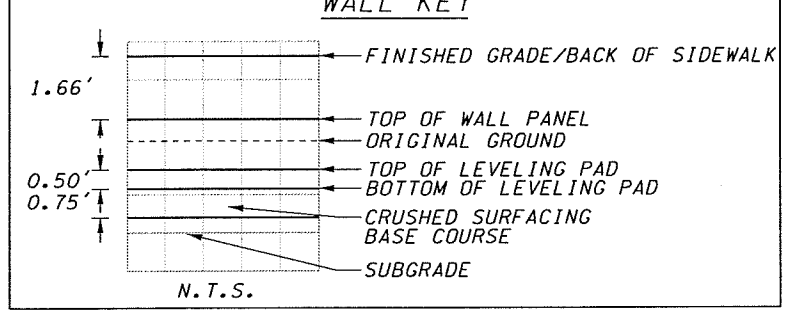

90% PLANS
PRELIMINARY

CALL 48 HOURS BEFORE YOU DIG
1-800-553-4344
"It's the Law"
NORTHWEST UTILITIES NOTIFICATION CENTER

DESIGNED	PW
DRAWN	PW
CRP	321222
HOR.	1" = 20'
VERT.	1" = 20'
DATE	11/04
DWG:	WP5
SHEET	26 OF 105

DESIGN & ENGINEERING DIVISION
DESIGN SECTION

BETTS BRIDGE #26 REPLACEMENT (SALMON CREEK AVE.)
WALL PROFILE

proud past, promising future
CLARK COUNTY WASHINGTON

FEDERAL AID # BRM-4231(004)

PLOT5

WALL NO. 6

SEE SHEET PP1

90% PLANS
PRELIMINARY

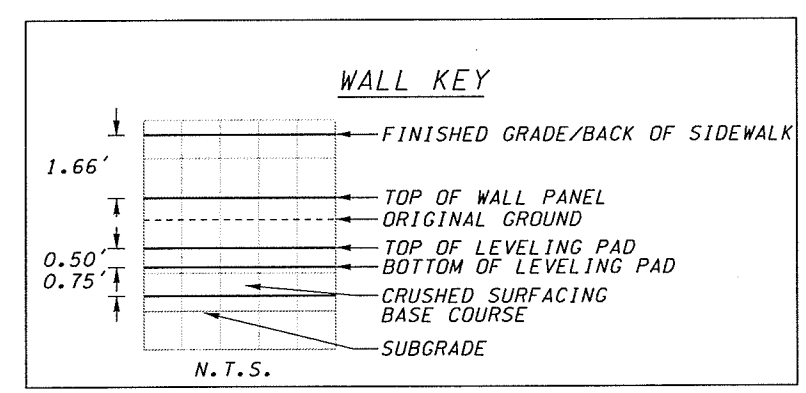

DESIGNED	PW
DRAWN	PW
CRP	321222
HOR.	1" = 20'
VERT.	1" = 20'
DATE	11/04
DWG:	WP6
SHEET	27 OF 105

CALL 48 HOURS BEFORE YOU DIG
1-800-553-4344
"It's the Law"
NORTHWEST UTILITIES NOTIFICATION CENTER

DESIGN & ENGINEERING DIVISION
DESIGN SECTION

BETTS BRIDGE #26 REPLACEMENT (SALMON CREEK AVE.)
WALL PROFILE

proud past, promising future
CLARK COUNTY
WASHINGTON

FEDERAL AID # BRM-4231(004)

PLOT5

NOTES:

1. SEE RETAINING WALL DETAILS, SHEET WD2

WALL NO 7 STA 10+00.00
EXISTING GROUND ELEV 104.07

WALL NO 7 STA 10+00.00
B2 10+85.00 (15.8' RT)
TOP OF WALL ELEV 104.40

WALL NO. 7
SEE SHEET PP7
(SEGMENTAL BLOCK WALL)

WALL NO 7 STA 10+53.85
EXISTING GROUND ELEV 107.70

WALL NO 7 STA 10+53.85
B1 10+37.36 (6.3' LT)
B2 10+36.37 (7.5' RT)
TOP OF WALL ELEV 110.00

WALL NO 7 STA 10+93.28
EXISTING GROUND ELEV 102.74

WALL NO 7 STA 10+93.28
B1 10+80. (5.8' LT)
TOP OF WALL ELEV 103.23

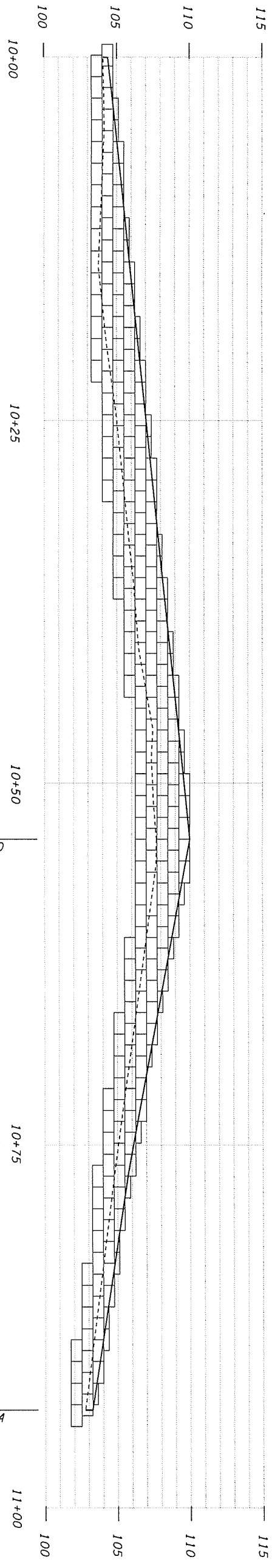

WALL KEY

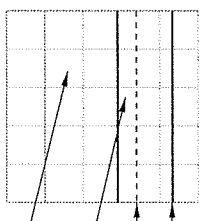

N.T.S.

90% PLANS
PRELIMINARY

FEDERAL AID # BRM-4231(004)

PLOT2

CLARK COUNTY
WASHINGTON
proud past, promising future

DESIGN & ENGINEERING DIVISION
DESIGN SECTION

BETTS BRIDGE #26 REPLACEMENT (SALMON CREEK AVE.)
WALL PROFILE

CALL 48 HOURS BEFORE YOU DIG
1-800-553-4344
"It's the Law"
NORTHWEST UTILITIES NOTIFICATION CENTER

DESIGNED	PW
DRAWN	PW
CRP	321222
HOR.	1" = 4'
VERT.	1" = 4'
DATE	11/04
DWG:	WP7
SHEET	28 OF 105

WALL NO 8 STA 10+00.00
B3 10+45.00 (15.8' RT)
TOP OF WALL ELEV 105.87

WALL NO. 8
SEE SHEET PP8

(SEGMENTAL BLOCK WALL)

WALL NO 8 STA 10+37.23
B2 10+83.00 (6.6' LT)
TOP OF WALL ELEV 106.20

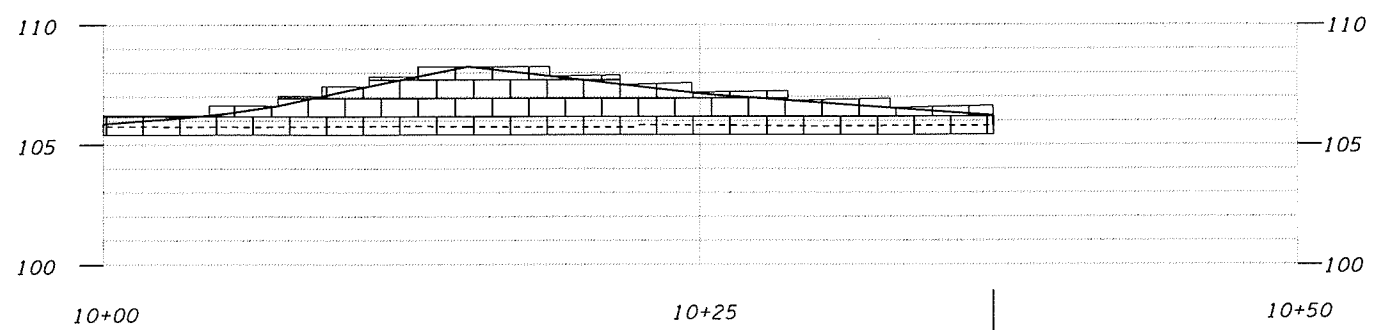

WALL NO 8 STA 10+00.00
EXISTING GROUND ELEV 105.75

WALL NO 7 STA 10+37.23
EXISTING GROUND ELEV 105.79

NOTES:
1. SEE RETAINING WALL DETAILS, SHEET WD2

WALL KEY

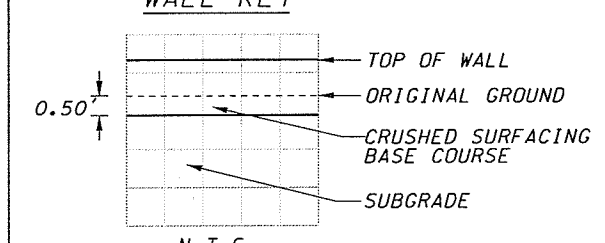

N.T.S.

90% PLANS
PRELIMINARY

DESIGNED	PW
DRAWN	PW
CRP	321222
HOR.	1" = 4'
VERT.	1" = 4'
DATE	11/04
DWG:	WP8
SHEET 29 OF 105	

CALL 48 HOURS BEFORE YOU DIG
1-800-553-4344
"It's the Law"
NORTHWEST UTILITIES NOTIFICATION CENTER

DESIGN & ENGINEERING DIVISION
DESIGN SECTION

BETTS BRIDGE #26 REPLACEMENT (SALMON CREEK AVE.)
WALL PROFILE

proud past, promising future
CLARK COUNTY
WASHINGTON

FEDERAL AID # BRM-4231(004)

PLOT2

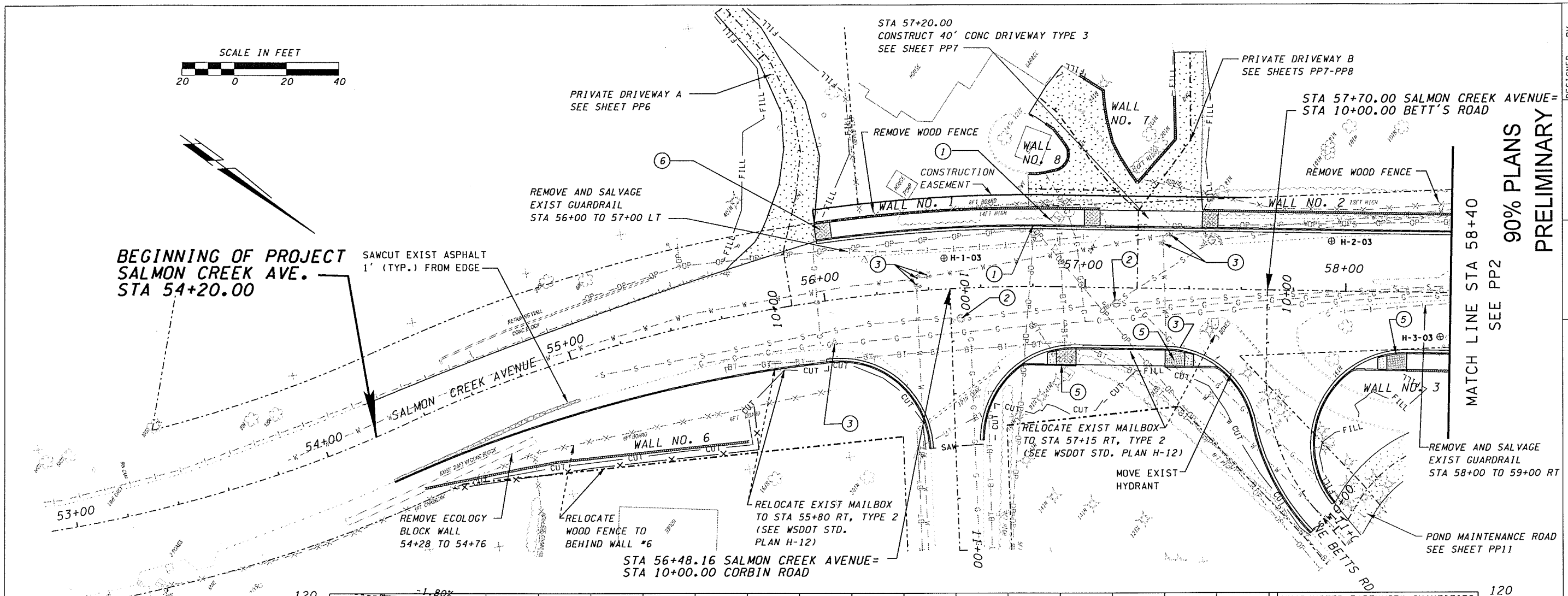

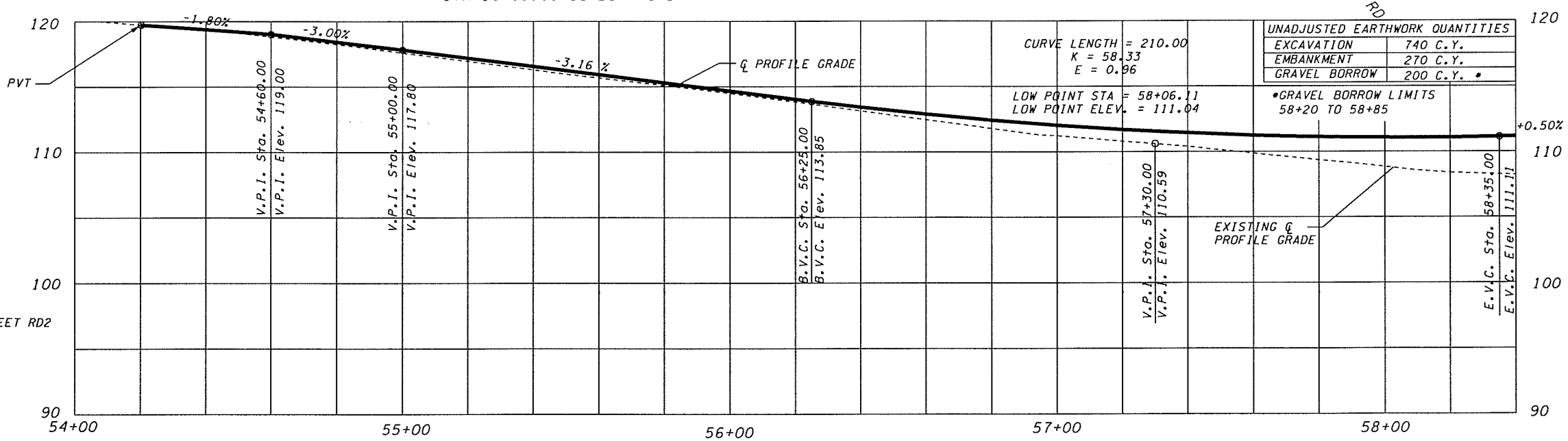

UNADJUSTED EARTHWORK QUANTITIES	
EXCAVATION	740 C.Y.
EMBANKMENT	270 C.Y.
GRAVEL BORROW	200 C.Y. *

*GRAVEL BORROW LIMITS
58+20 TO 58+85

1. RELOCATE/REMOVE BY OTHERS
2. ADJUST MH RIM/CB GRATE TO FG
3. ADJUST VALVE COVER/METER BOX TO FG
4. TREE TO BE REMOVED
5. INSTALL TYPE 6 WHEEL CHAIR RAMP, SEE SHEET RD2 FOR DETAILS
6. INSTALL CURB RAMP, SEE DETAIL F7, SHEET RD2

NOTES:

REMOVE ALL TREES WITHIN CUT/FILL LINES UNLESS OTHERWISE NOTED (TYPICAL)

UNDERGROUND UTILITY LOCATIONS ARE APPROXIMATE. UTILITY LOCATIONS SHALL BE VERIFIED PRIOR TO CONSTRUCTION.

SAWCUT & REMOVE EXIST RDWY

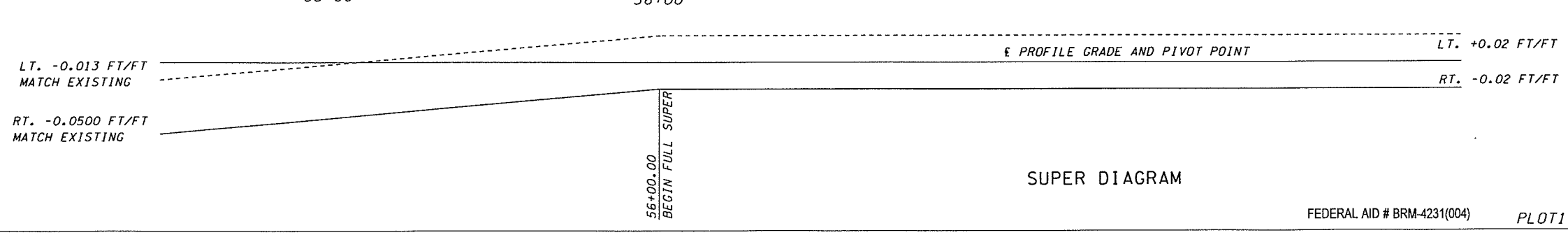

SUPER DIAGRAM

FEDERAL AID # BRM-4231(004)

PLOT1

DESIGNED	PW
DRAWN	PW
CRP	321222
HOR.	1" = 20'
VERT.	1" = 5'
DATE	11/04
DWG:	PP1
SHEET	30 OF 105

CALL 48 HOURS BEFORE YOU DIG
1-800-553-4344
"It's the Law"
NORTHWEST UTILITIES NOTIFICATION CENTER

DESIGN & ENGINEERING DIVISION
DESIGN SECTION

BETTS BRIDGE #26 REPLACEMENT (SALMON CREEK AVE.)
54+20 TO STA 58+40

proud past, promising future
CLARK COUNTY
WASHINGTON

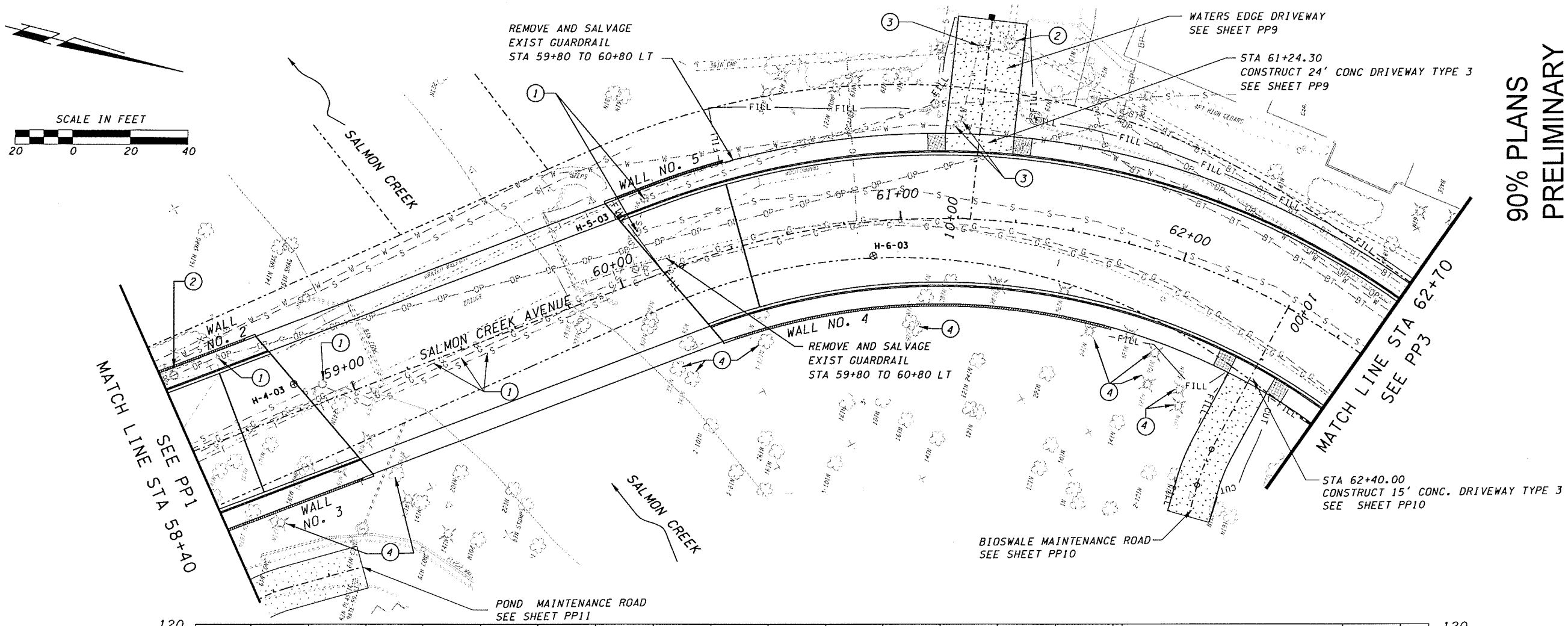

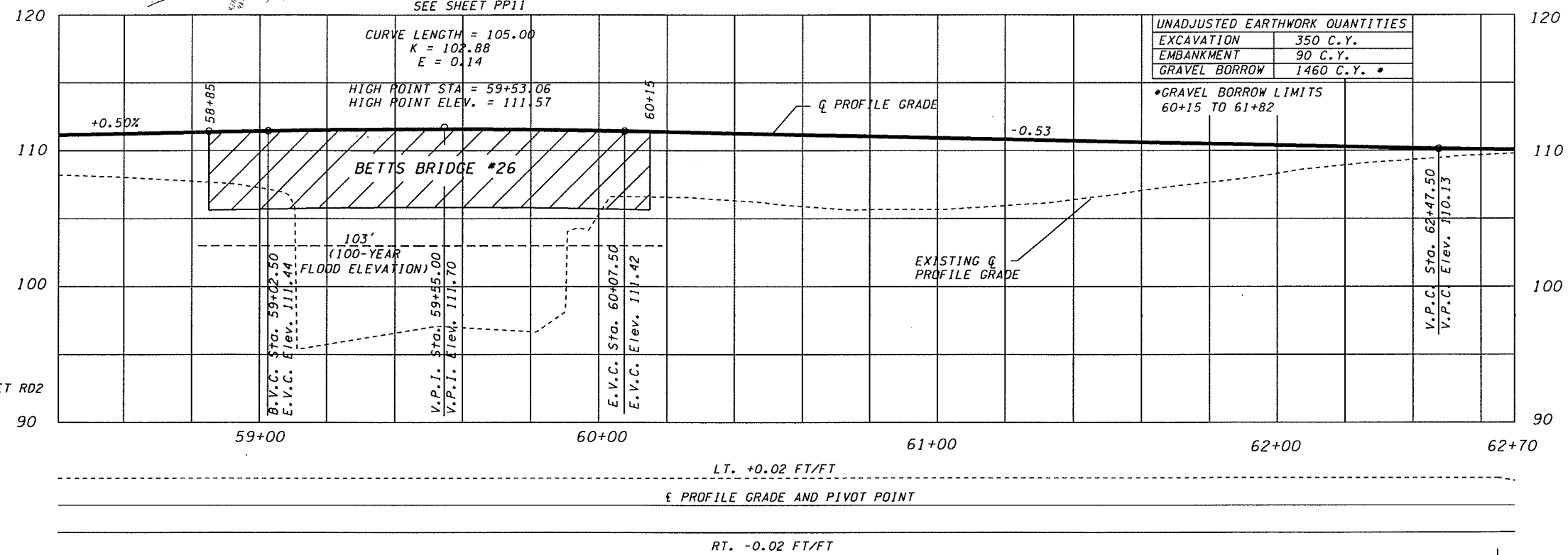

UNADJUSTED EARTHWORK QUANTITIES	
EXCAVATION	350 C.Y.
EMBANKMENT	90 C.Y.
GRAVEL BORROW	1460 C.Y. *

*GRAVEL BORROW LIMITS
60+15 TO 61+82

62+64.89
END FULL SUPER

SUPER DIAGRAM

1. RELOCATE/REMOVE BY OTHERS
2. ADJUST MH RIM/CB GRATE TO FG
3. ADJUST VALVE COVER/METER BOX TO FG
4. TREE TO BE REMOVED
5. INSTALL TYPE 6 WHEEL CHAIR RAMP, SEE SHEET RD2 FOR DETAILS
6. INSTALL CURB RAMP, SEE DETAIL F7, SHEET RD2

NOTES:

REMOVE ALL TREES WITHIN CUT/FILL LINES UNLESS OTHERWISE NOTED (TYPICAL)

UNDERGROUND UTILITY LOCATIONS ARE APPROXIMATE. UTILITY LOCATIONS SHALL BE VERIFIED PRIOR TO CONSTRUCTION.

FEDERAL AID # BRM-4231(004)

PLOT2

90% PLANS
PRELIMINARY

CALL 48 HOURS BEFORE YOU DIG
1-800-553-4344
"It's the Law"
NORTHWEST UTILITIES NOTIFICATION CENTER

DESIGNED	PW
DRAWN	PW
CRP	321222
HOR.	1" = 20'
VERT.	1" = 5'
DATE	11/04
DWG:	PP2
SHEET 31 OF 105	

DESIGN & ENGINEERING DIVISION
DESIGN SECTION

BETTS BRIDGE #26 REPLACEMENT (SALMON CREEK AVE.)
STA. 58+40 TO STA 62+70

proud past, promising future

CLARK COUNTY
WASHINGTON

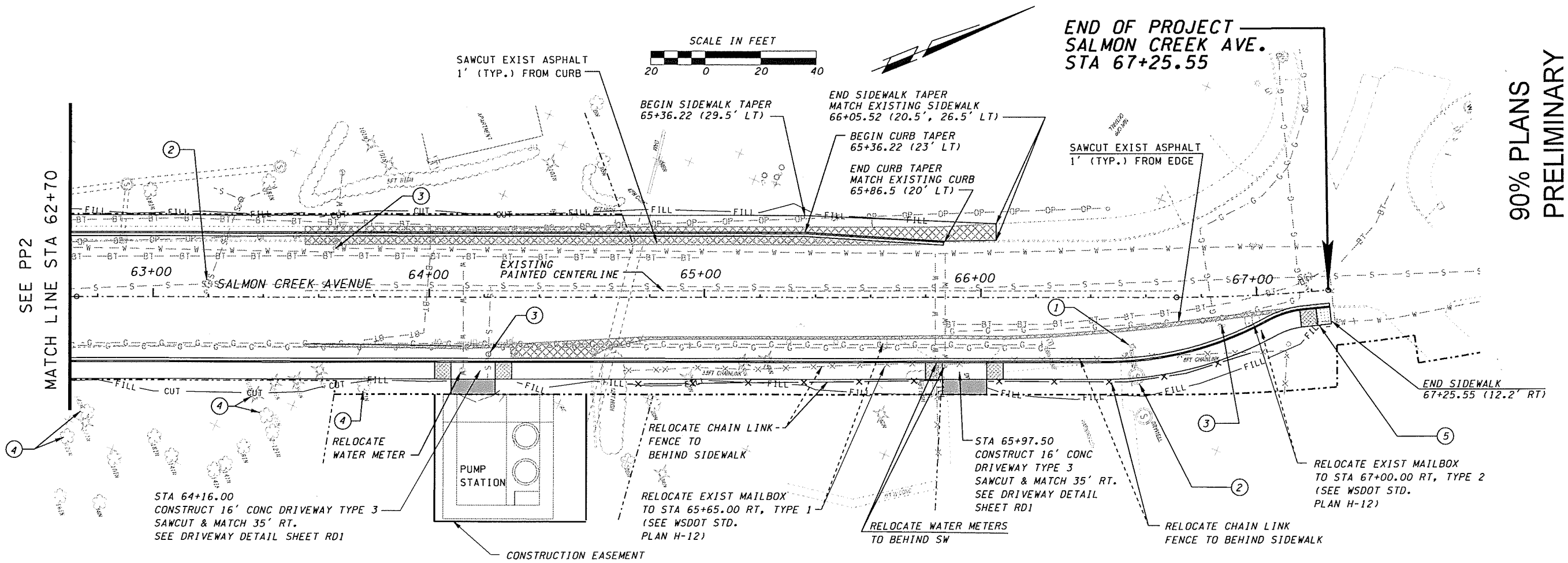

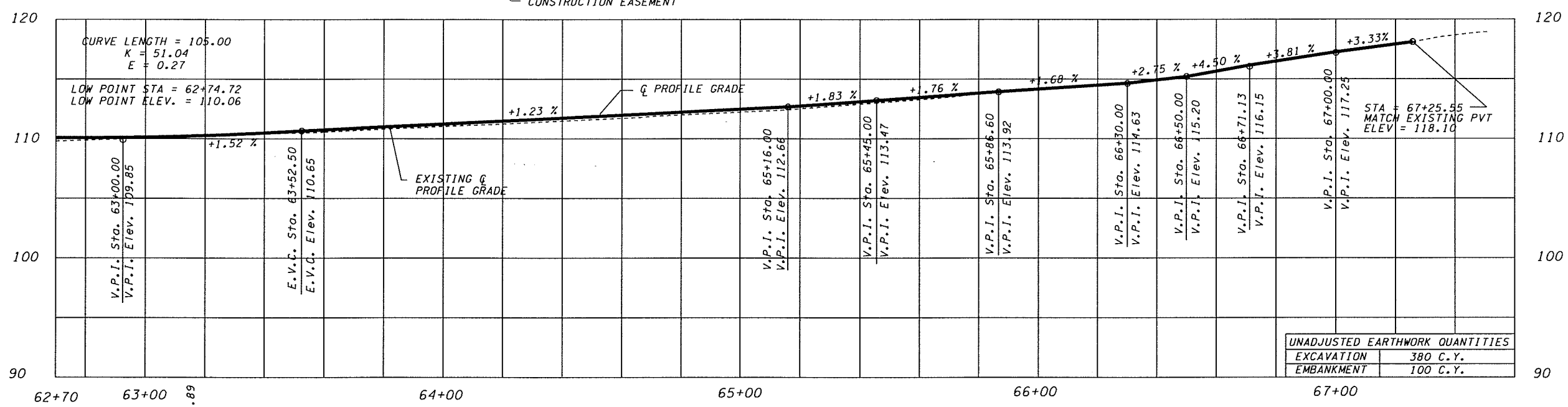

UNADJUSTED EARTHWORK QUANTITIES	
EXCAVATION	380 C.Y.
EMBANKMENT	100 C.Y.

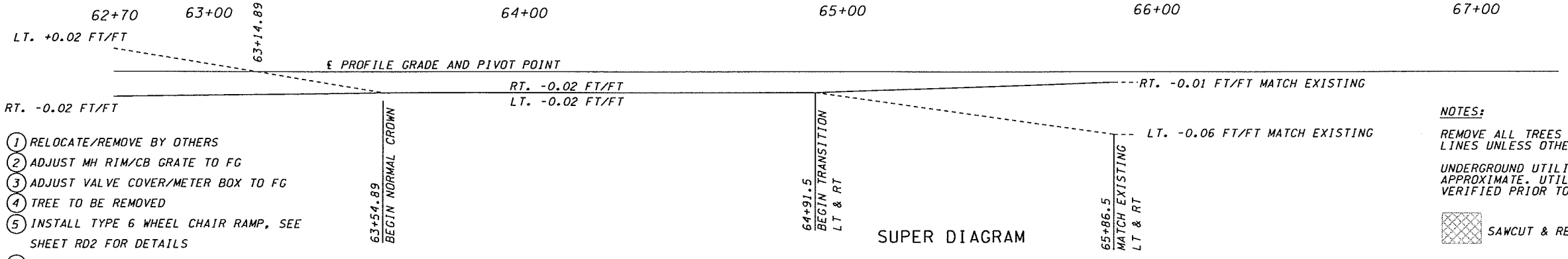

SUPER DIAGRAM

1. RELOCATE/REMOVE BY OTHERS
2. ADJUST MH RIM/CB GRATE TO FG
3. ADJUST VALVE COVER/METER BOX TO FG
4. TREE TO BE REMOVED
5. INSTALL TYPE 6 WHEEL CHAIR RAMP, SEE SHEET RD2 FOR DETAILS
6. INSTALL CURB RAMP, SEE DETAIL F7, SHEET RD2

NOTES:

REMOVE ALL TREES WITHIN CUT/FILL LINES UNLESS OTHERWISE NOTED (TYPICAL)

UNDERGROUND UTILITY LOCATIONS ARE APPROXIMATE. UTILITY LOCATIONS SHALL BE VERIFIED PRIOR TO CONSTRUCTION.

SAWCUT & REMOVE EXIST RDWY

FEDERAL AID # BRM-4231(004)

PLOT3

90% PLANS
PRELIMINARY

CALL 48 HOURS BEFORE YOU DIG
1-800-553-4344
"It's the Law"
NORTHWEST UTILITIES NOTIFICATION CENTER

DESIGNED	PW
DRAWN	PW
CRP	321222
HOR.	1" = 20'
VERT.	1" = 5'
DATE	11/04
DWG:	PP3
SHEET	32 OF 105

DESIGN & ENGINEERING DIVISION
DESIGN SECTION

BETTS BRIDGE #26 REPLACEMENT (SALMON CREEK AVE.)
STA. 62+70 TO 67+25

proud past, promising future
CLARK COUNTY WASHINGTON

STA 56+48.16 SALMON CREEK AVENUE=
STA 10+00.00 CORBIN ROAD

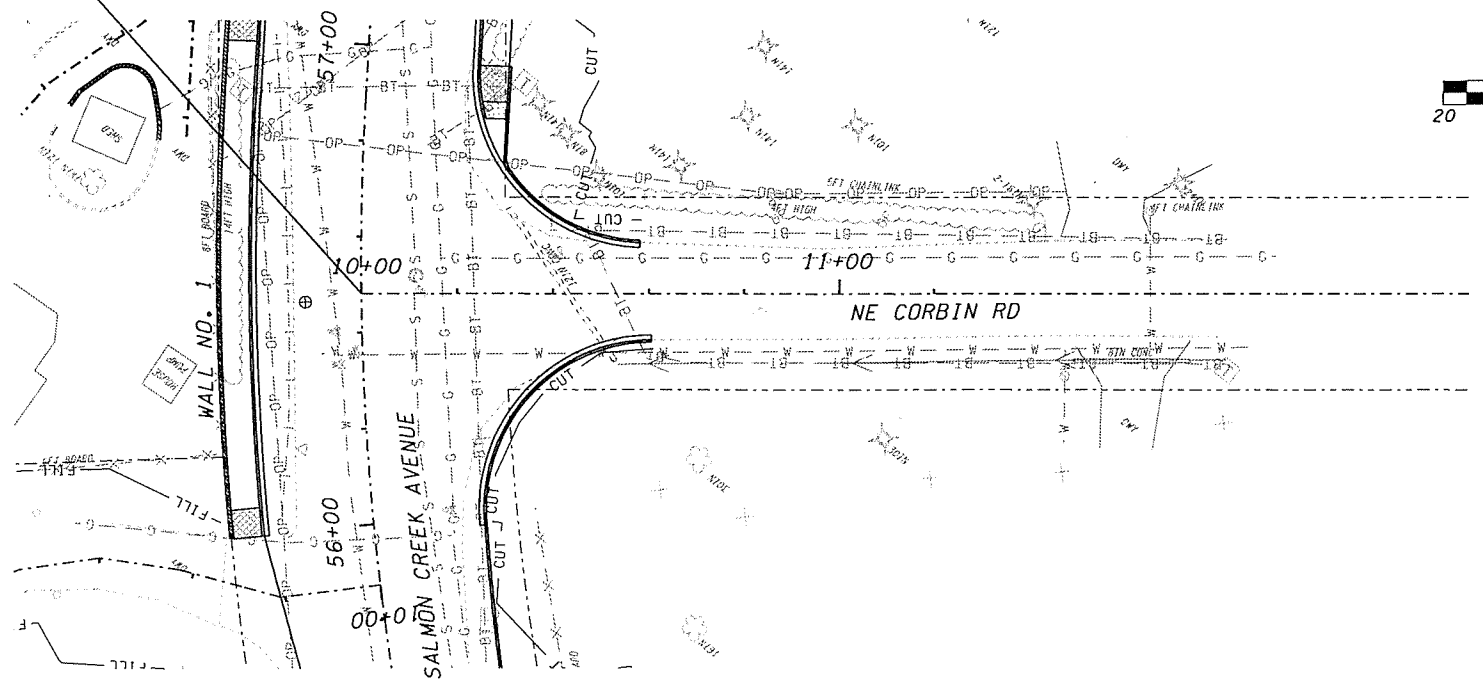

SCALE IN FEET
20 0 20 40

UNADJUSTED EARTHWORK QUANTITIES	
EXCAVATION	110 C.Y.
EMBANKMENT	0 C.Y.

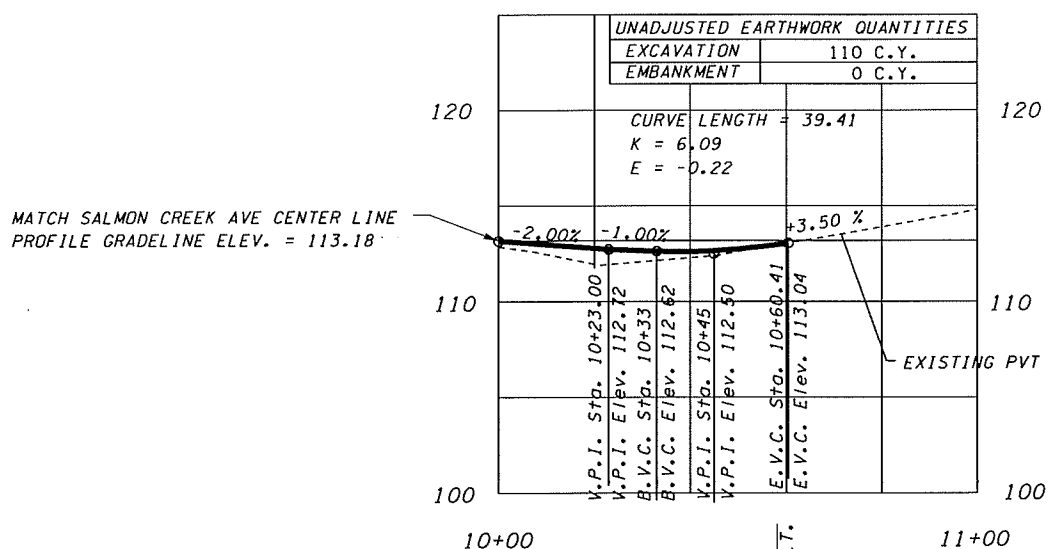

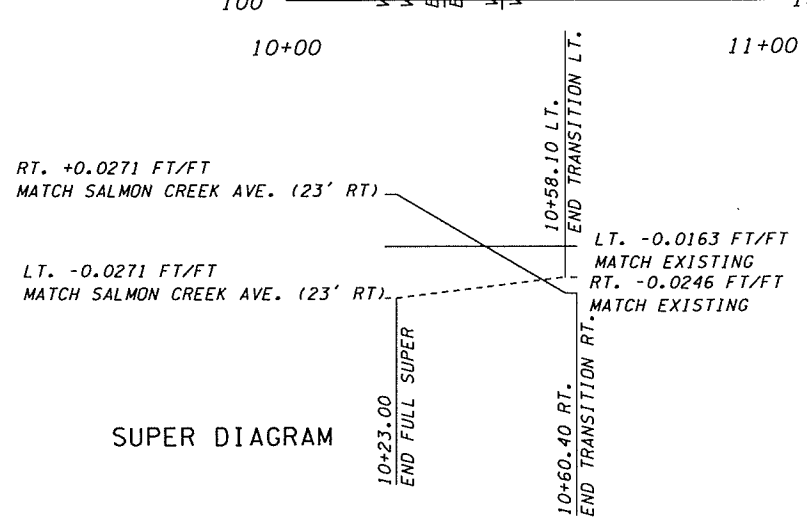

SUPER DIAGRAM

90% PLANS
PRELIMINARY

DESIGNED	PW
DRAWN	PW
CRP	321222
HOR.	1" = 20'
VERT.	1" = 5'
DATE	11/04
DWG:	PP4
SHEET	33 OF 105

CALL 48 HOURS BEFORE YOU DIG
1-800-553-4344
"It's the Law"
NORTHWEST UTILITIES NOTIFICATION CENTER

DESIGN & ENGINEERING DIVISION
DESIGN SECTION

BETTS BRIDGE #26 REPLACEMENT (SALMON CREEK AVE.)
CORBIN ROAD STA. 10+00 TO STA 10+60.40

proud past, promising future
CLARK COUNTY
WASHINGTON

FEDERAL AID # BRM-4231(004)

PLOT4

STA 57+70.00 SALMON CREEK AVENUE=
STA 10+00.00 BETT'S ROAD

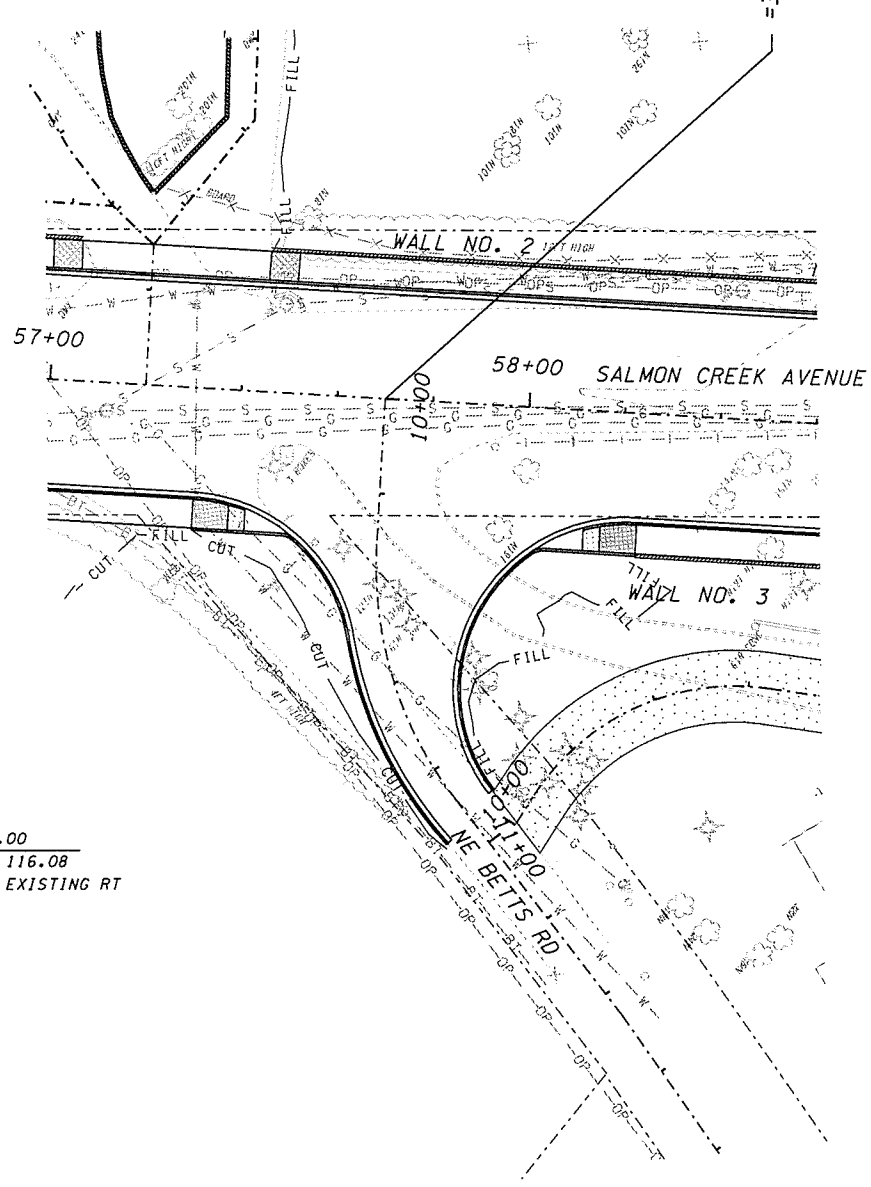

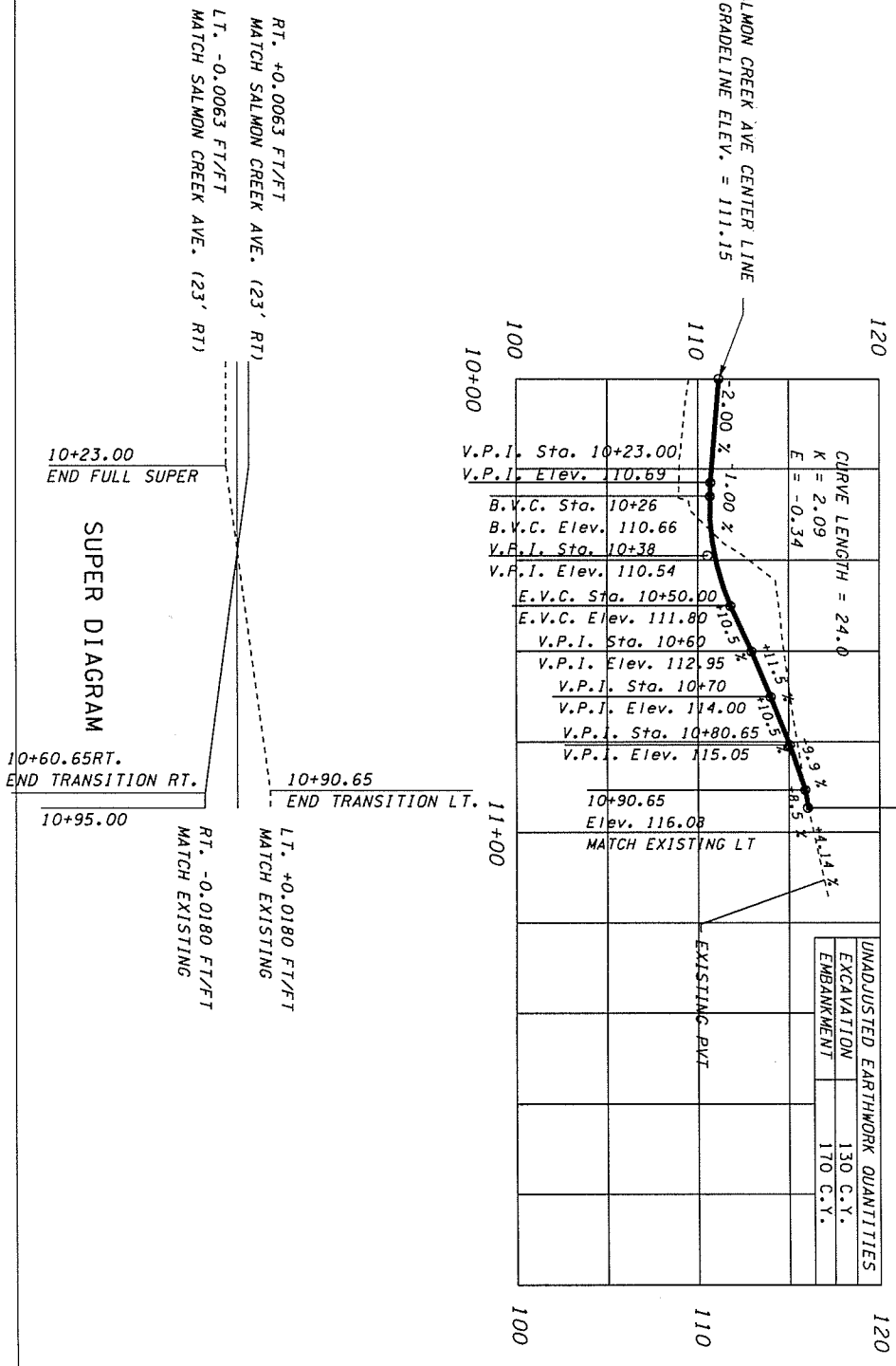

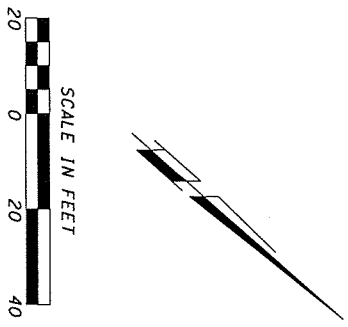

90% PLANS
PRELIMINARY

FEDERAL AID # BRM-4231(004)

PLOT4

CLARK COUNTY
WASHINGTON
proud past, promising future

DESIGN & ENGINEERING DIVISION
DESIGN SECTION

BETTS BRIDGE #26 REPLACEMENT (SALMON CREEK AVE.)
BETTS ROAD STA. 10+00 TO STA 10+95

CALL 48 HOURS BEFORE YOU DIG
1-800-553-4344
"It's the Law"
NORTHWEST UTILITIES NOTIFICATION CENTER

DESIGNED	PW
DRAWN	PW
CRP	321222
HOR.	1" = 20'
VERT.	1" = 5'
DATE	11/04
DWG:	PP5
SHEET 34	OF 105

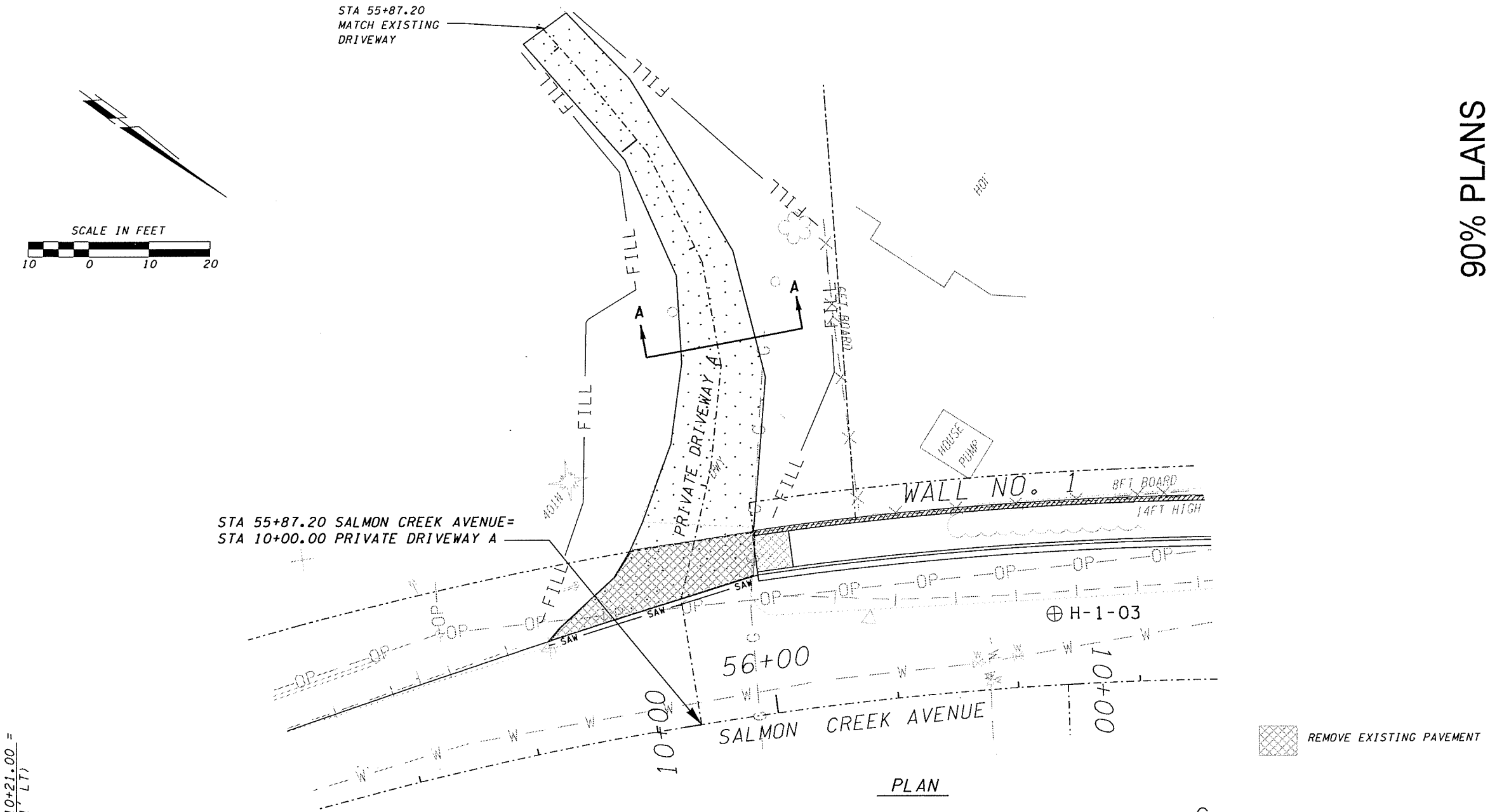

PLAN

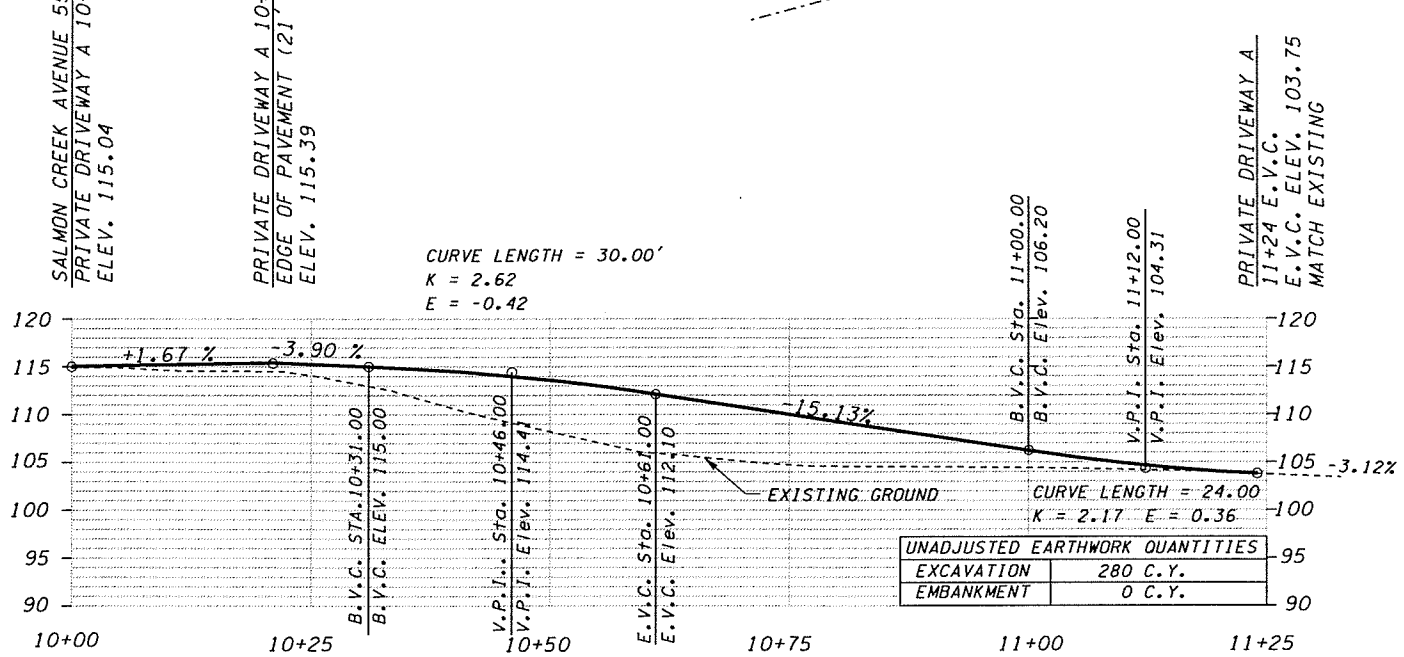

UNADJUSTED EARTHWORK QUANTITIES	
EXCAVATION	280 C.Y.
EMBANKMENT	0 C.Y.

PROFILE

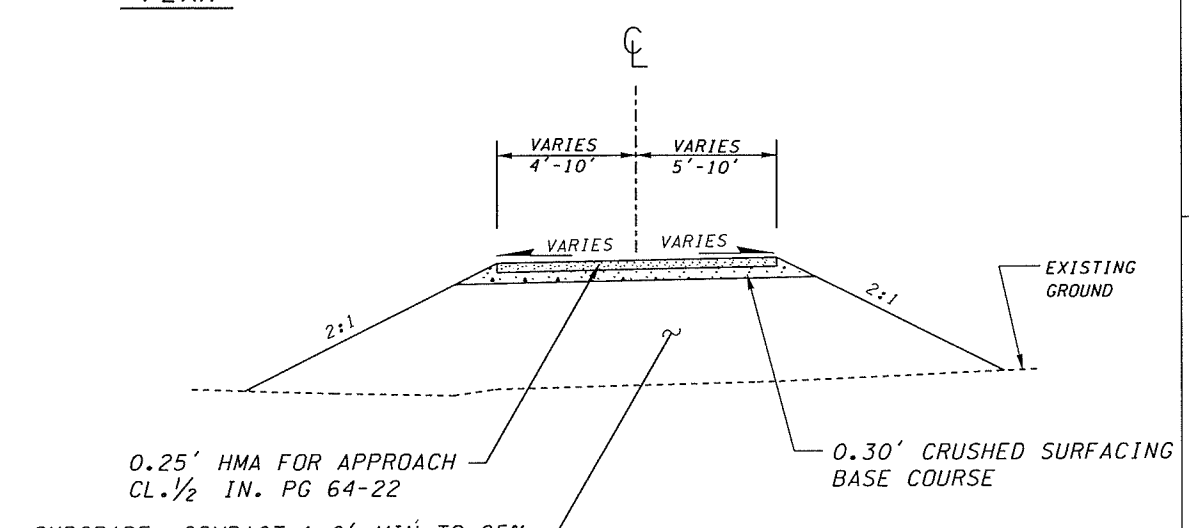

TYPICAL SECTION A-A

90% PLANS
PRELIMINARY

DESIGNED	PW
DRAWN	PW
CRP	321222
HOR.	1" = 10'
VERT.	1" = 10'
DATE	11/04
DWG:	PP6
SHEET	35 OF 105

CALL 48 HOURS BEFORE YOU DIG
1-800-553-4344
"It's the Law"
NORTHWEST UTILITIES NOTIFICATION CENTER

DESIGN & ENGINEERING DIVISION
DESIGN SECTION

BETTS BRIDGE #26 REPLACEMENT (SALMON CREEK AVE.)
PLAN & PROFILE PRIVATE DRIVEWAY A

proud past, promising future
CLARK COUNTY
WASHINGTON

FEDERAL AID # BRM-4231(004)

PLOT4

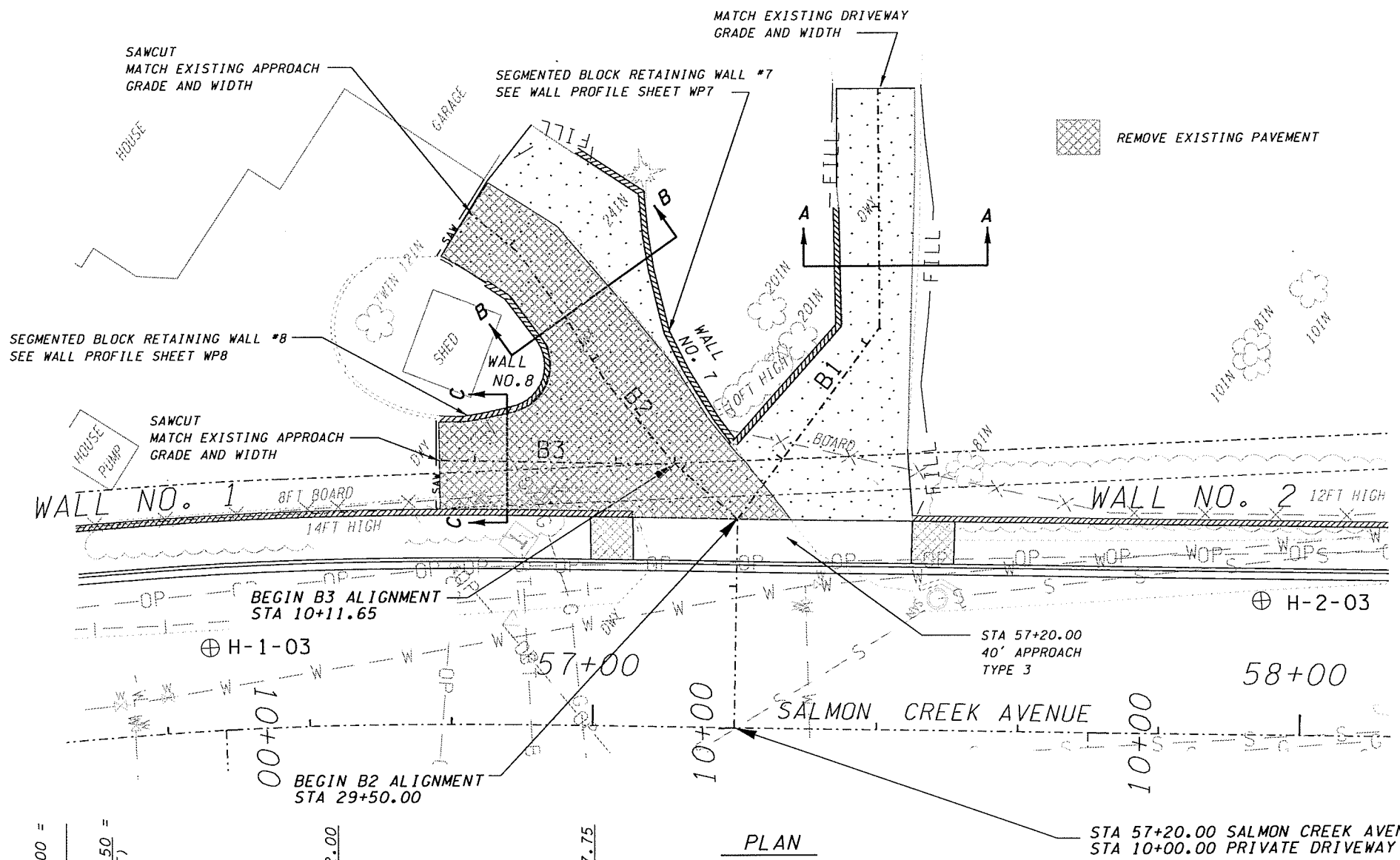

PLAN

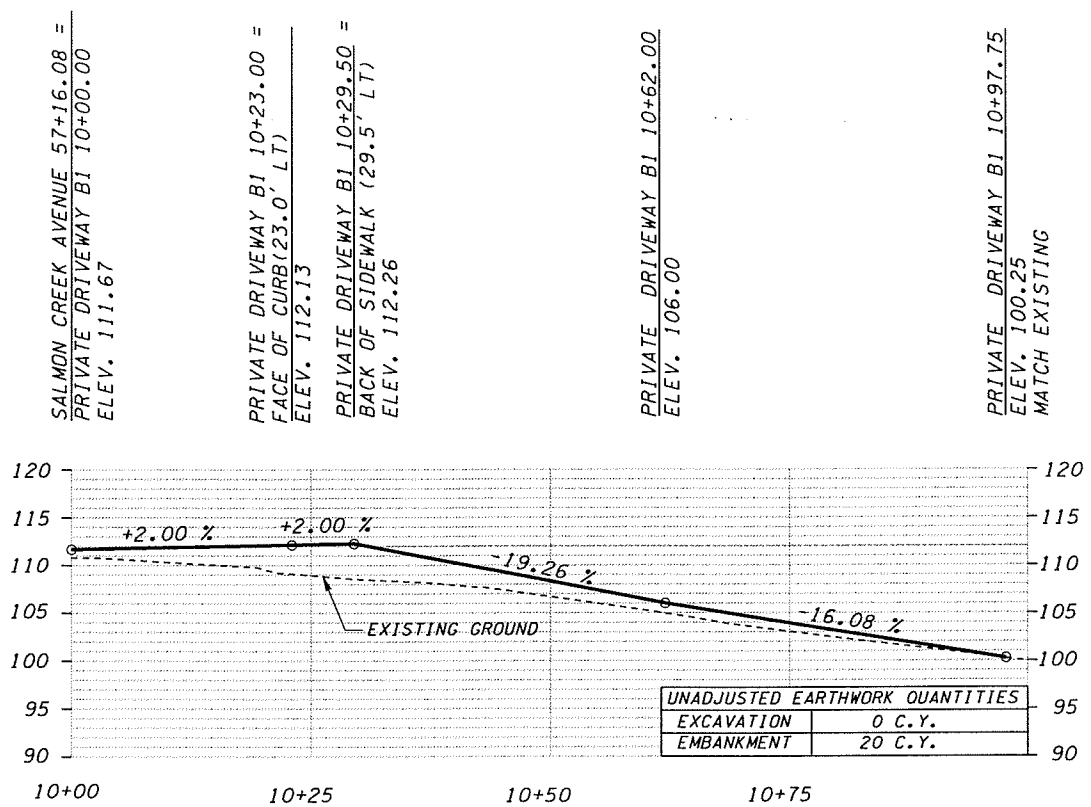

UNADJUSTED EARTHWORK QUANTITIES	
EXCAVATION	0 C.Y.
EMBANKMENT	20 C.Y.

PROFILE

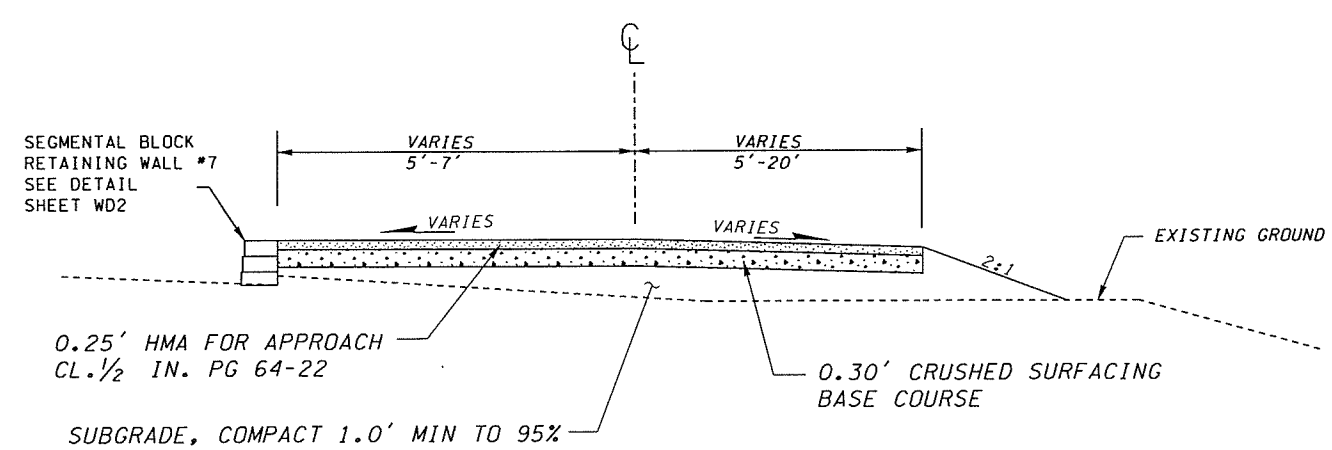

TYPICAL SECTION A-A

90% PLANS
PRELIMINARY

DESIGNED	PW
DRAWN	PW
CRP	321222
HOR.	1" = 10'
VERT.	1" = 10'
DATE	11/04
DWG:	PP7
SHEET	36 OF 105

CALL 48 HOURS BEFORE YOU DIG
1-800-553-4344
"It's the Law"
NORTHWEST UTILITIES NOTIFICATION CENTER

DESIGN & ENGINEERING DIVISION
DESIGN SECTION

BETTS BRIDGE #26 REPLACEMENT (SALMON CREEK AVE.)
PLAN & PROFILE PRIVATE DRIVEWAY B

proud past, promising future
CLARK COUNTY
WASHINGTON

FEDERAL AID # BRM-4231(004)

PLOT4

PRIVATE DRIVEWAY B2 10+29.5=
PRIVATE DRIVEWAY B1 10+29.5
ELEV. 112.26

PRIVATE DRIVEWAY B2 10+41.00
ELEV. 111.00

PRIVATE DRIVEWAY B2 10+56.00
ELEV. 109.00

PRIVATE DRIVEWAY B2 10+66.00
ELEV. 107.50

PRIVATE DRIVEWAY B2 10+78.85
ELEV. 106.00

PRIVATE DRIVEWAY B2 10+87.50
ELEV. 105.48
MATCH EXISTING

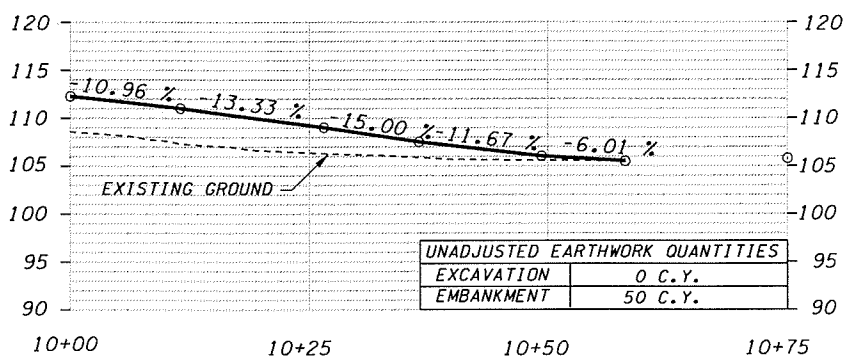

UNADJUSTED EARTHWORK QUANTITIES	
EXCAVATION	0 C.Y.
EMBANKMENT	50 C.Y.

PROFILE B2

PRIVATE DRIVEWAY B3 10+11.65
PRIVATE DRIVEWAY B2 10+41.22
ELEV. 111.00

PRIVATE DRIVEWAY B3 10+20.00
ELEV. 109.50

PRIVATE DRIVEWAY B3 10+30.00
ELEV. 107.70

PRIVATE DRIVEWAY B3 10+45.23
ELEV. 105.82
MATCH EXISTING

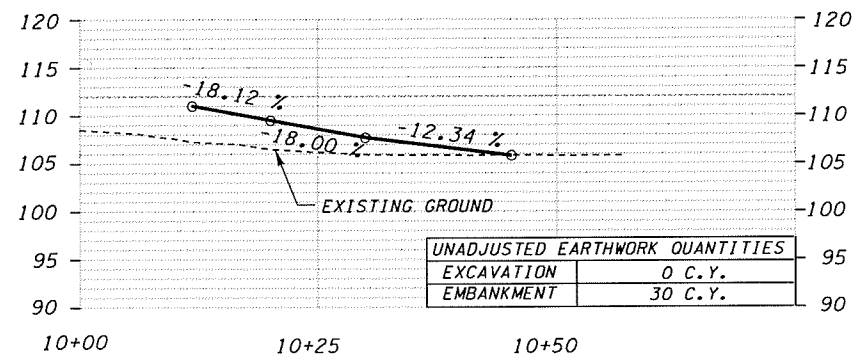

UNADJUSTED EARTHWORK QUANTITIES	
EXCAVATION	0 C.Y.
EMBANKMENT	30 C.Y.

PROFILE B3

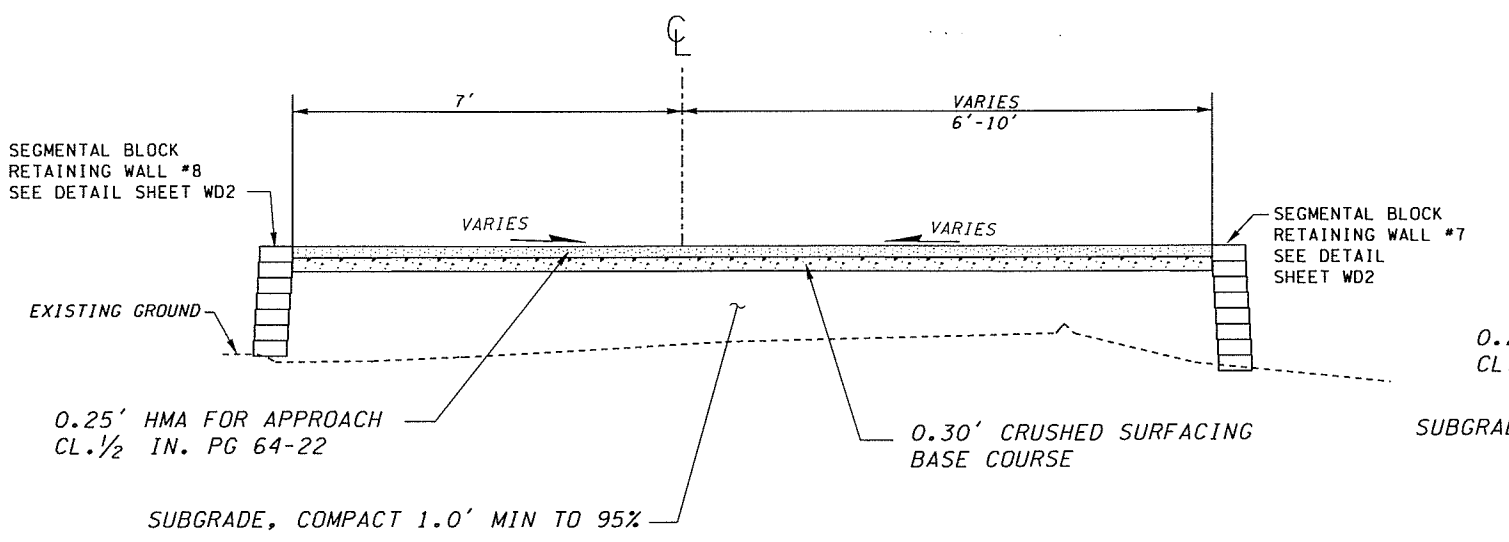

TYPICAL SECTION B-B

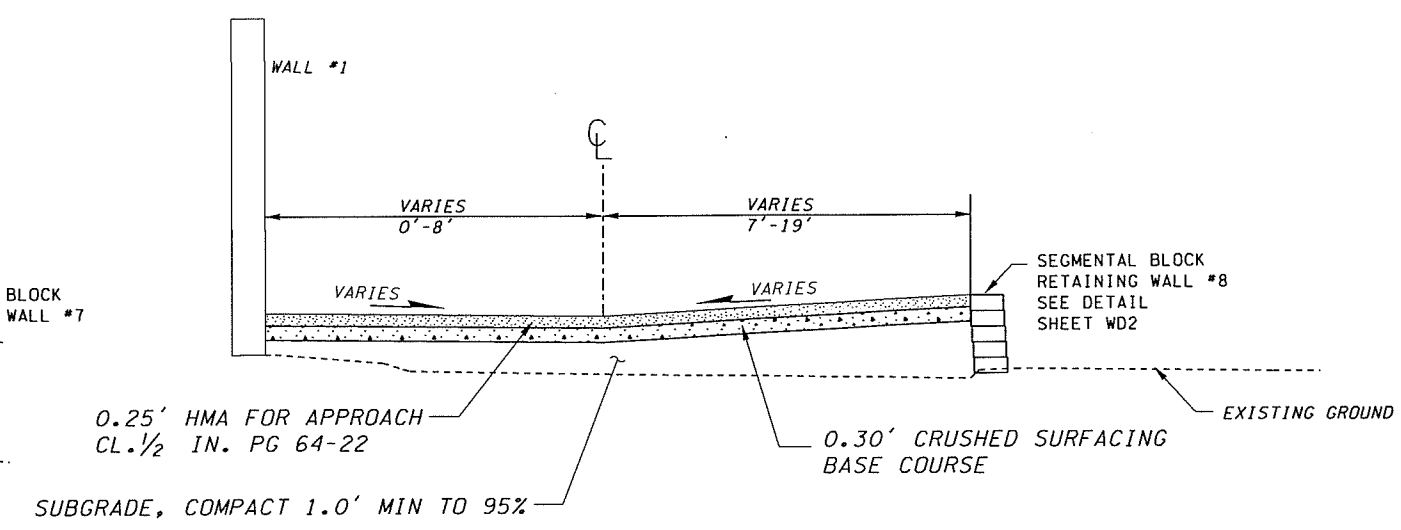

TYPICAL SECTION C-C

90% PLANS
PRELIMINARY

DESIGN & ENGINEERING DIVISION
DESIGN SECTION

BETTS BRIDGE #26 REPLACEMENT (SALMON CREEK AVE.)
PROFILES & SECTIONS PRIVATE DRIVEWAY B

CALL 48 HOURS BEFORE YOU DIG
1-800-553-4344
"It's the Law"
NORTHWEST UTILITIES NOTIFICATION CENTER

DESIGNED	PW
DRAWN	PW
CRP	321222
HOR.	1" = 10'
VERT.	1" = 10'
DATE	11/04
DWG:	PP8
SHEET	37 OF 105

proud past, promising future
CLARK COUNTY WASHINGTON

FEDERAL AID # BRM-4231(004)

PLOT4

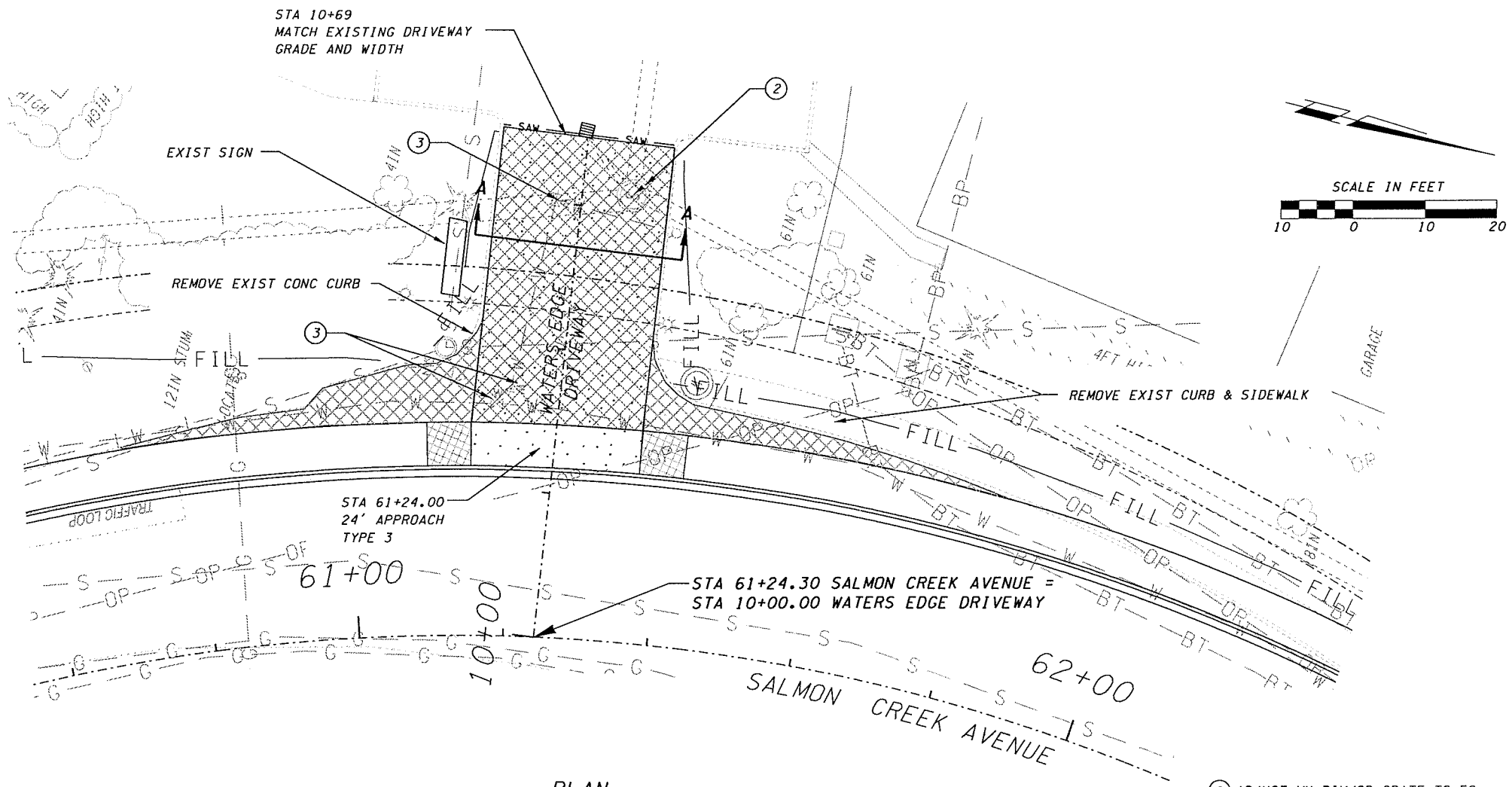

PLAN

(2) ADJUST MH RIM/CB GRATE TO FG
(3) ADJUST VALVE COVER/METER BOX TO FG

REMOVE EXISTING PAVEMENT

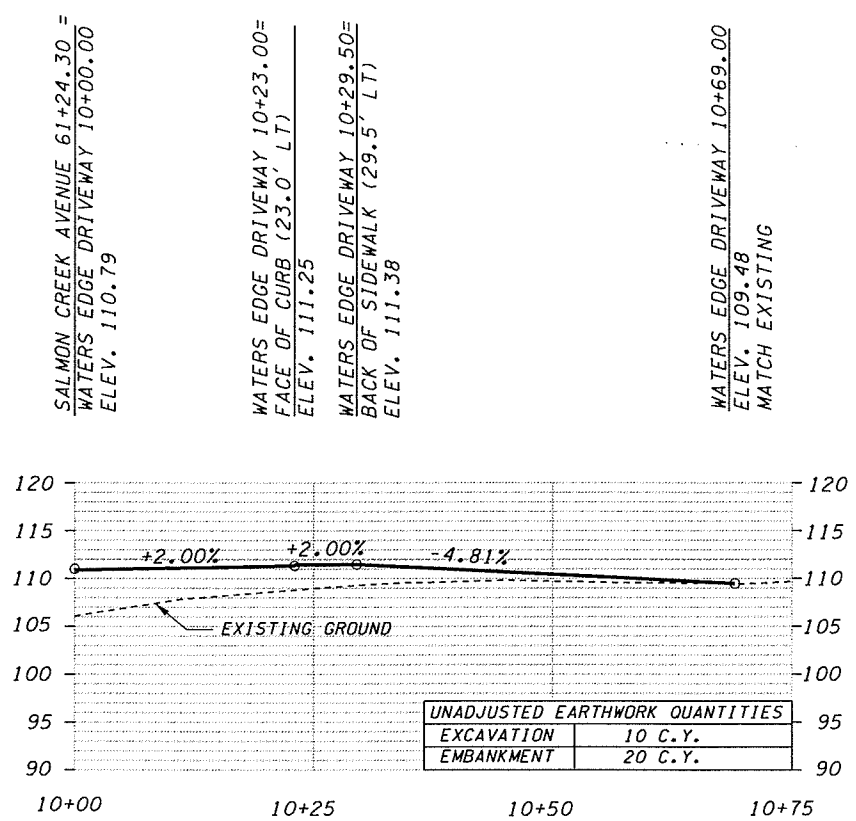

UNADJUSTED EARTHWORK QUANTITIES	
EXCAVATION	10 C.Y.
EMBANKMENT	20 C.Y.

PROFILE

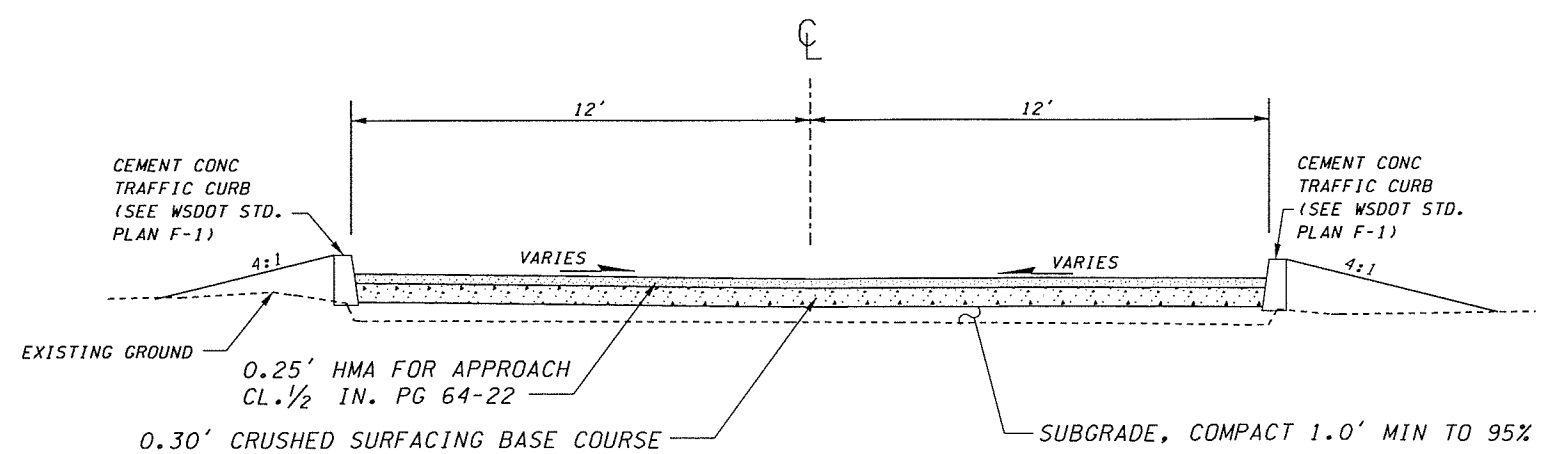

TYPICAL SECTION A-A

90% PLANS
PRELIMINARY

DESIGNED	PW
DRAWN	PW
CRP	321222
HOR.	1" = 10'
VERT.	1" = 10'
DATE	11/04
DWG:	PP9
SHEET 38 OF 105	

CALL 48 HOURS BEFORE YOU DIG
1-800-553-4344
"It's the Law"
NORTHWEST UTILITIES NOTIFICATION CENTER

DESIGN & ENGINEERING DIVISION
DESIGN SECTION

BETTS BRIDGE #26 REPLACEMENT (SALMON CREEK AVE.)
PLAN & PROFILE WATERS EDGE DRIVEWAY

proud past, promising future
CLARK COUNTY
WASHINGTON

FEDERAL AID # BRM-4231(004)

PLOT4

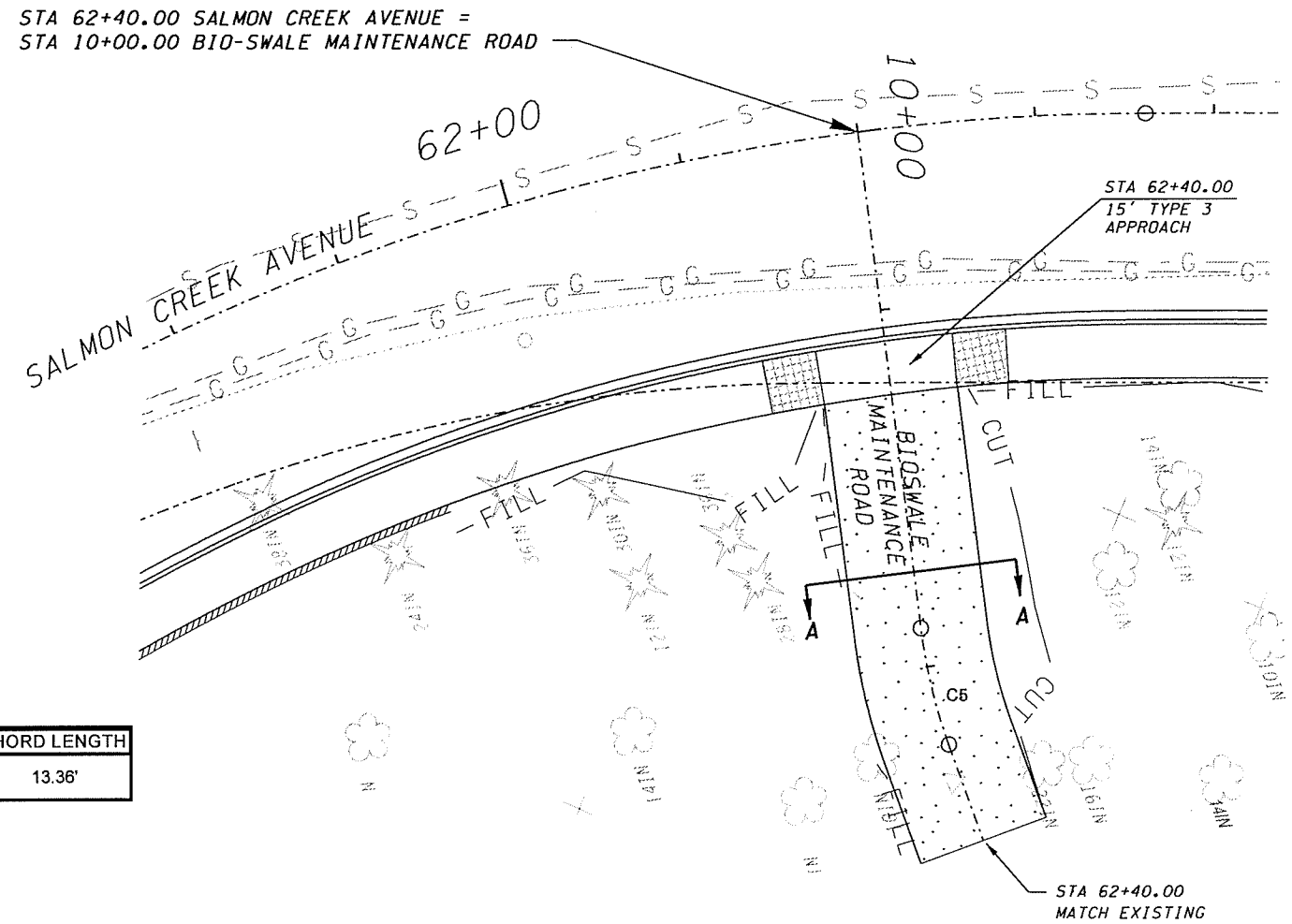

PLAN

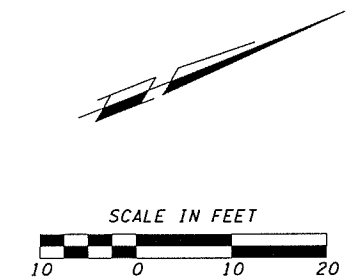

CURVE TABLE

NUMBER	DELTA ANGLE	TANGENT	RADIUS	ARC LENGTH	CHORD LENGTH
C5	-12°47'06"	6.72'	60.00'	13.39'	13.36'

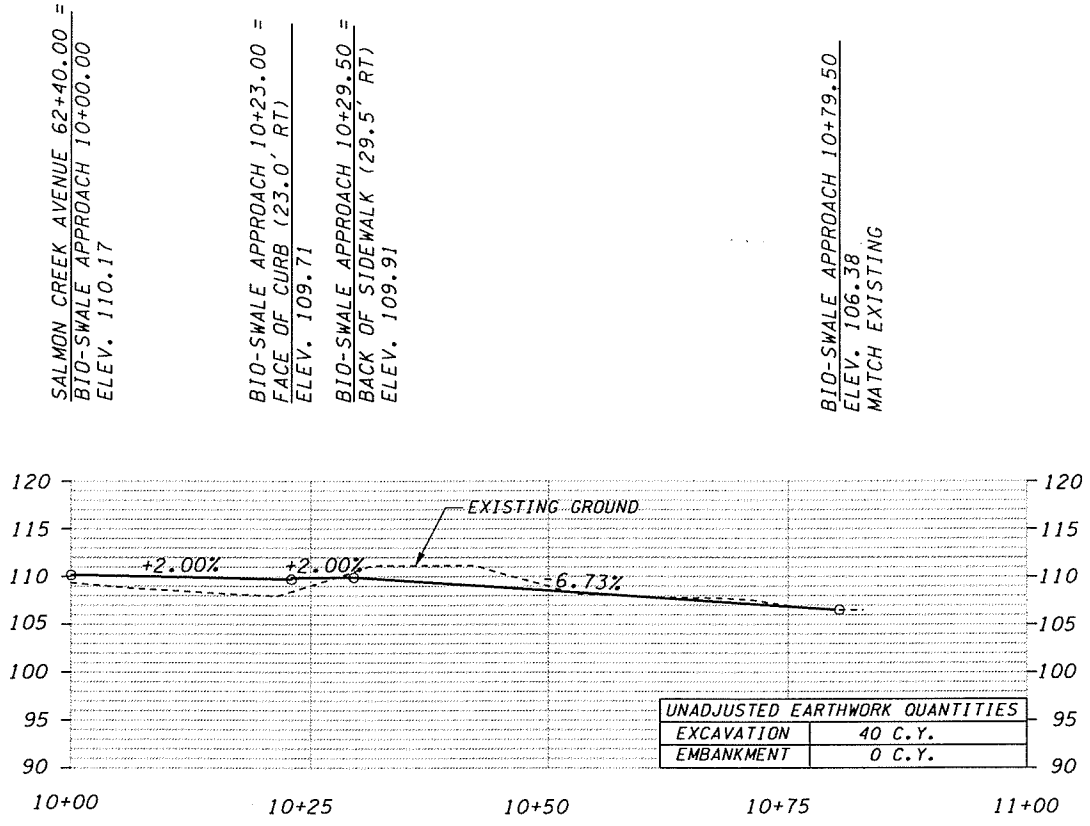

UNADJUSTED EARTHWORK QUANTITIES	
EXCAVATION	40 C.Y.
EMBANKMENT	0 C.Y.

PROFILE

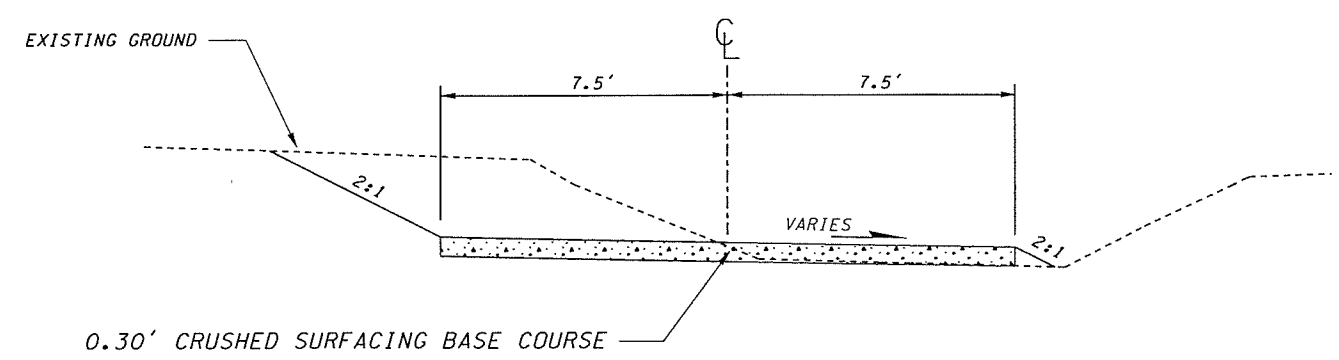

TYPICAL SECTION A-A

90% PLANS
PRELIMINARY

DESIGN & ENGINEERING DIVISION
DESIGN SECTION

BETTS BRIDGE #26 REPLACEMENT (SALMON CREEK AVE.)
PLAN & PROFILE BIOSWALE MAINTENANCE ROAD

DESIGNED	PW
DRAWN	PW
CRP	321222
HOR.	1" = 10'
VERT.	1" = 10'
DATE	11/04
DWG:	PP10
SHEET	39 OF 105

CALL 48 HOURS BEFORE YOU DIG 1-800-553-4344 "It's the Law" NORTHWEST UTILITIES NOTIFICATION CENTER

proud past, promising future
CLARK COUNTY WASHINGTON

FEDERAL AID # BRM-4231(004)

PLOT4

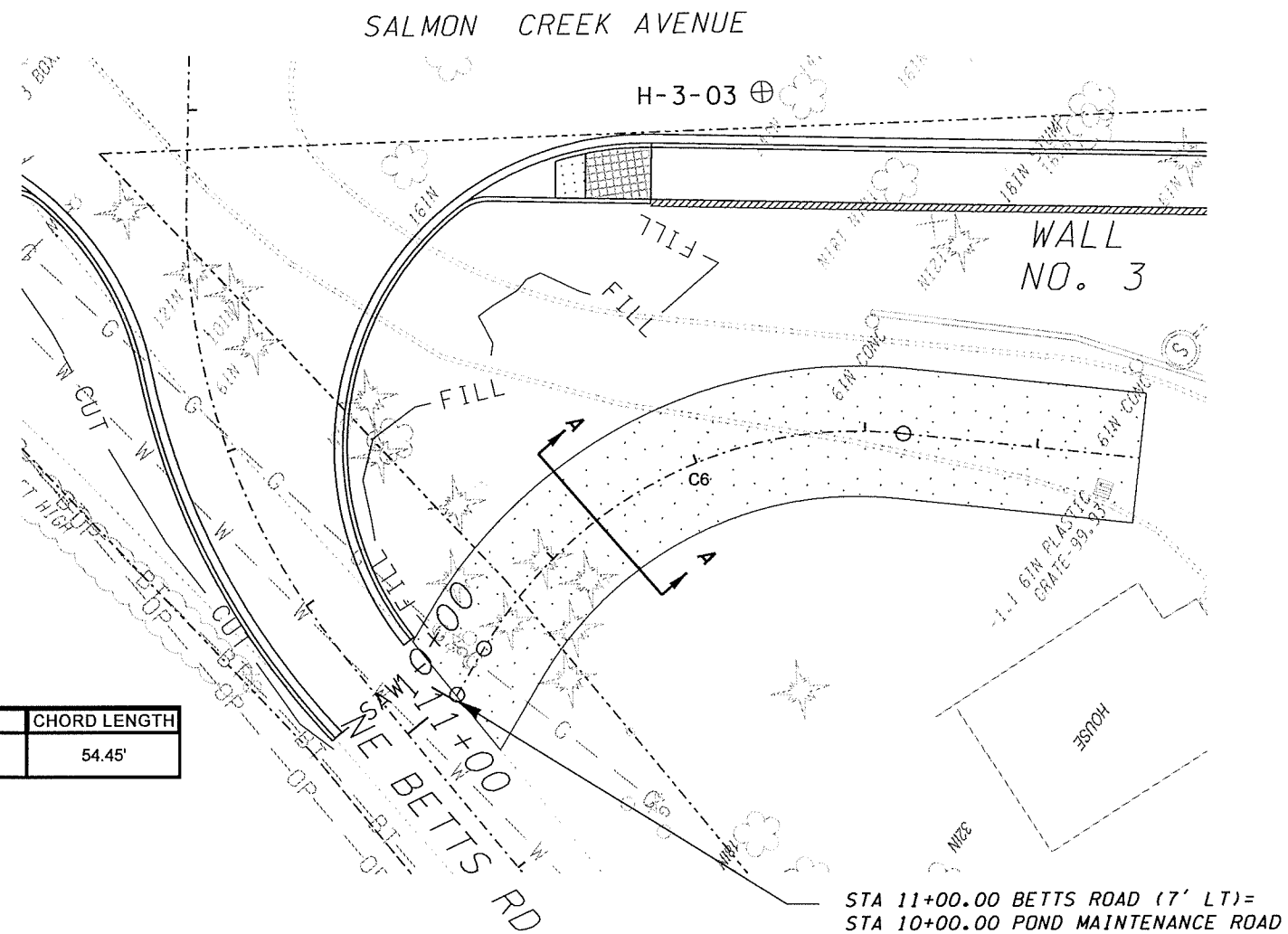

PLAN

CURVE TABLE

NUMBER	DELTA ANGLE	TANGENT	RADIUS	ARC LENGTH	CHORD LENGTH
C6	65°58'28"	32.45'	50.00'	57.57'	54.45'

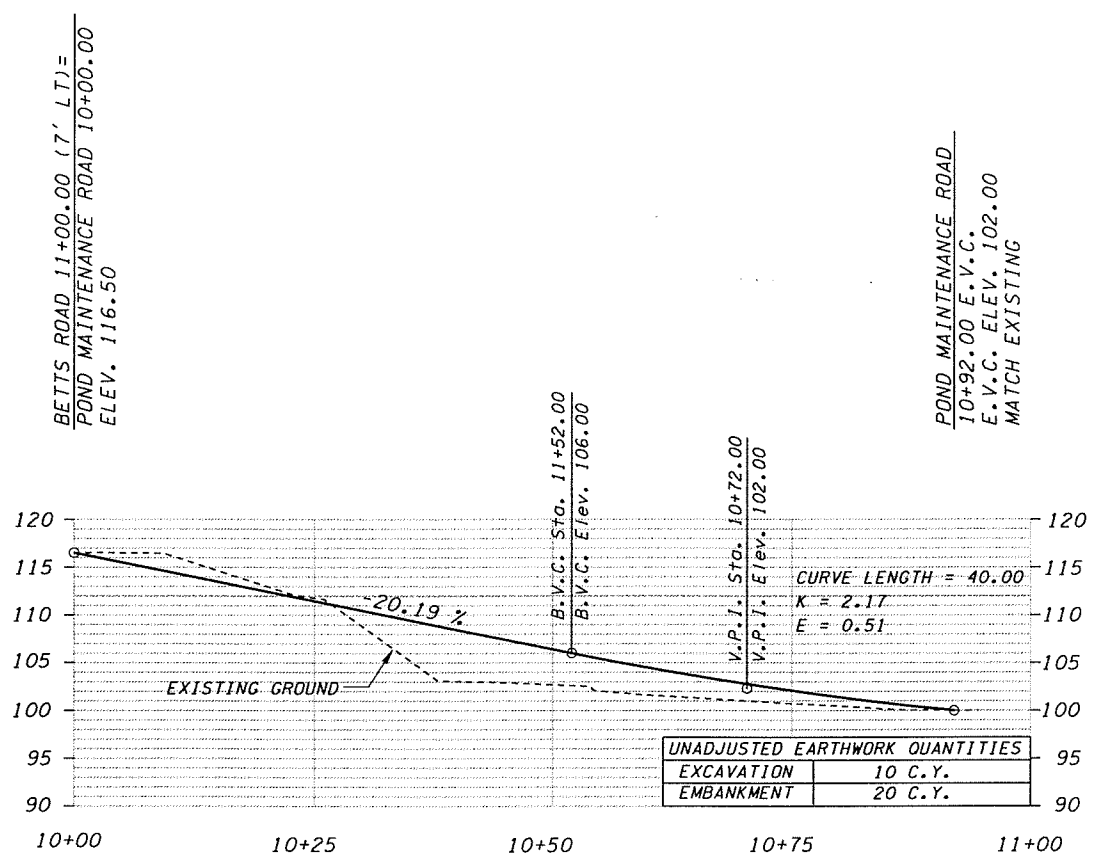

PROFILE

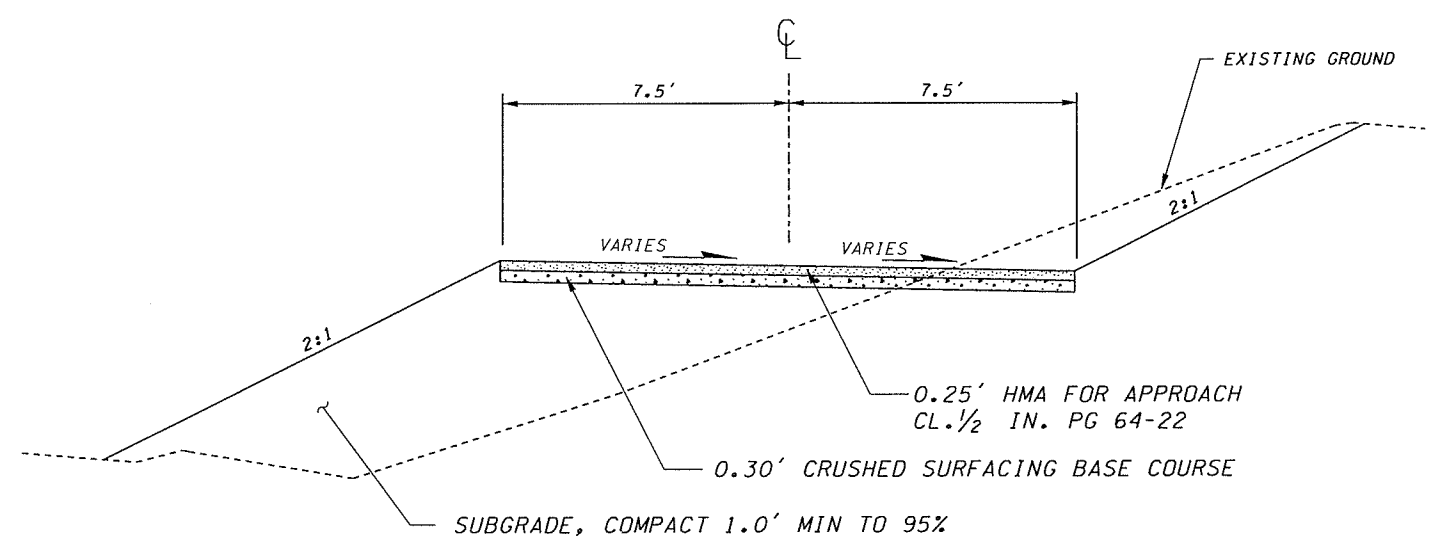

TYPICAL SECTION A-A

SCALE IN FEET
10 0 10 20

90% PLANS
PRELIMINARY

DESIGNED PW
DRAWN PW
CRP 321222
HOR. 1" = 10'
VERT. 1" = 10'
DATE 11/04
DWG: PP11
SHEET 40 OF 105

CALL 48 HOURS BEFORE YOU DIG
1-800-553-4344
"It's the Law"
NORTHWEST UTILITIES NOTIFICATION CENTER

DESIGN & ENGINEERING DIVISION
DESIGN SECTION

BETTS BRIDGE #26 REPLACEMENT (SALMON CREEK AVE.)
PLAN & PROFILE POND MAINTENANCE ROAD

proud past, promising future
CLARK COUNTY WASHINGTON

FEDERAL AID # BRM-4231(004)

PLOT4

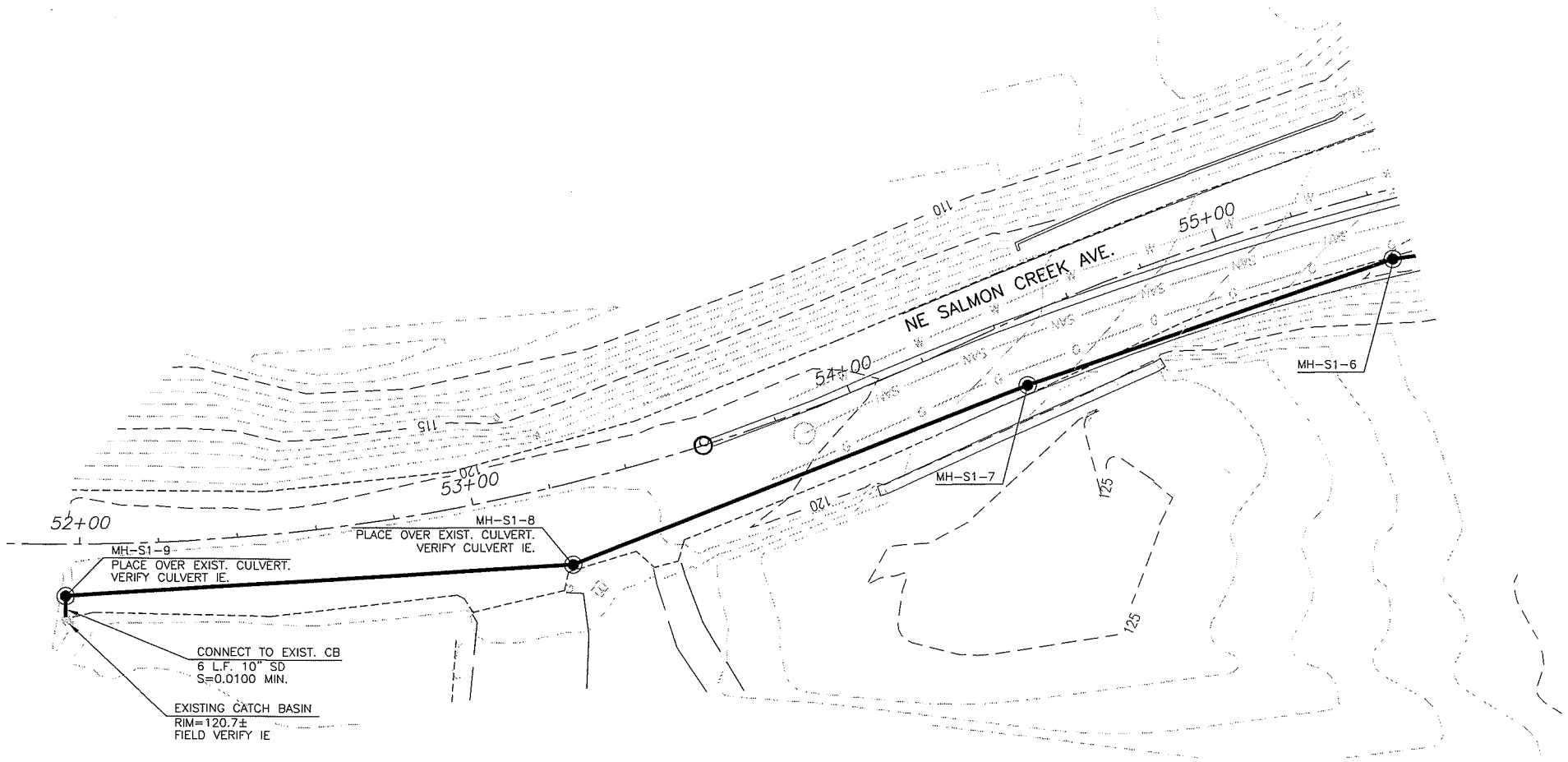

STORM DRAIN PLAN (51+80 TO 55+50)

SCALE: 1"=20' (FOR 22" X 34" SHEET)

SCALE IN FEET

20 0 20 40

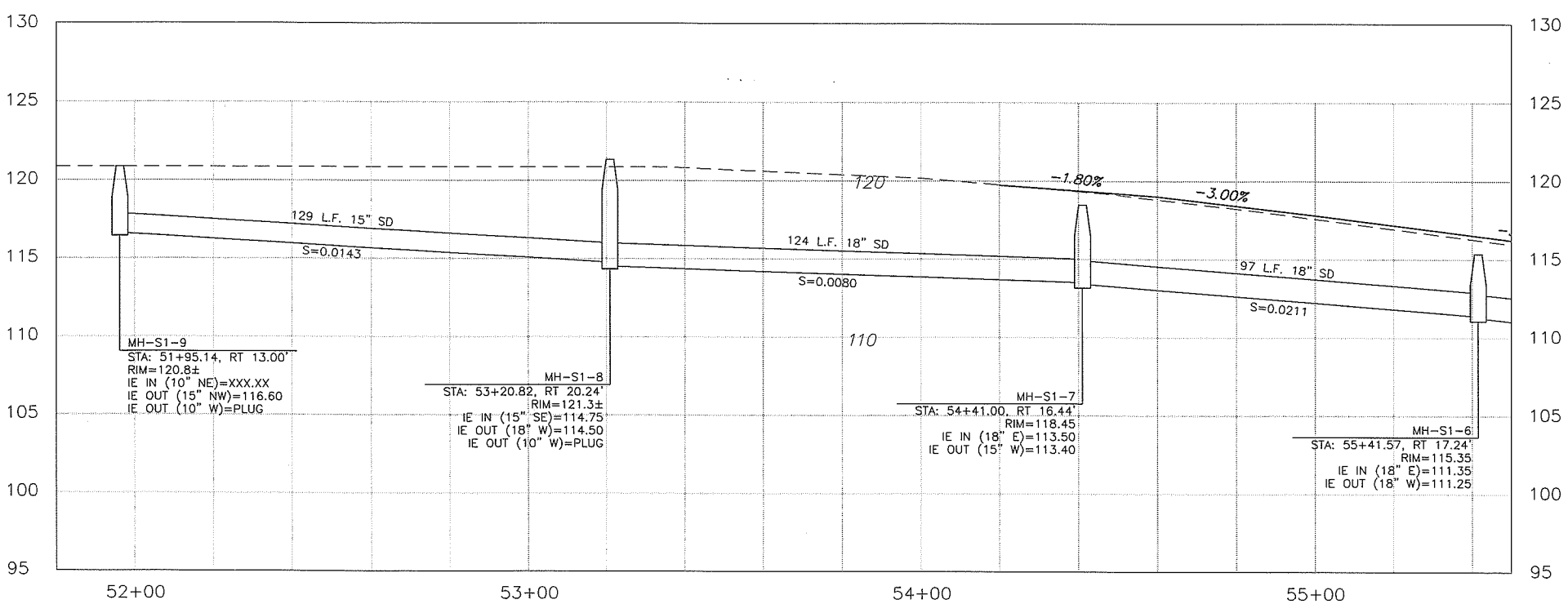

STORM DRAIN PROFILE (51+80 to 55+50)

HORZ. SCALE: 1"=20' (FOR 22" X 34" SHEET)
VERT. SCALE: 1"=5' (FOR 22" X 34" SHEET)

UTILITY NOTES:

1. EXISTING UTILITIES BASED UPON LOCATES PERFORMED BY WSDOT, AS-BUILTS FROM HAZEL DELL SEWER, FIELD REVIEWS, AND SURVEY DATA PROVIDED BY CLARK COUNTY, WASHINGTON.
2. LOCATE INFORMATION SUPERCEDED AS-BUILT INFORMATION WHERE DISCREPENCIES OCCURRED.
3. NO AS-BUILT INFORMATION WAS AVAILABLE FOR THE BATTLEGROUND SANITARY SEWER LINE.
4. REFER TO SHEET SD5 FOR CLARK COUNTY'S GENERAL STORM DRAINAGE NOTES.

UTILITY CONTACTS:

SAN. SEWER – HAZEL DELL SEWER DIST. (360-750-5876)
BATTLEGROUND SEWER (360-342-5060)

GAS – NW NATURAL GAS (800-233-3111)

WATER – CLARK PUBLIC UTILITIES (360-992-8022)

PHONE/CABLE/TV – COMCAST (XXX-XXX-XXXX)
QWEST (360-699-3546,3553)
AT&T (XXX-XXX-XXXX)

ELECTRICAL – CLARK PUBLIC UTILITIES (360-992-8808)

NORTHWEST UTILITY NOTIFICATION CENTER (ONE CALL CENTER) – 800-553-4344

UTILITY CROSSINGS:

1. 24" SD IE=108.19
WTR-VERIFY SIZE AND IE
2. 24" SD IE=107.63
G-VERIFY SIZE AND IE
3. 24" SD IE=106.38
(2) G-VERIFY SIZE AND IE
4. 24" SD IE=106.33
WTR-VERIFY
5. 10" SD IE=104.68
G-VERIFY SIZE AND IE
6. 10" SD IE=104.52
G-VERIFY SIZE AND IE
7. 18" SD IE=103.72
(2) G-VERIFY SIZE AND IE
8. 10" SD IE=104.98
(2) G-VERIFY SIZE AND IE
9. 10" SD IE=104.45
16" SSFM-VERIFY IE
10. 10" SD IE=105.20
8" SS IE=104.15
11. 10" SD IE=105.35
18" SS IE=106.55
12. 10" SD IE=105.57
WTR-VERIFY SIZE AND IE
13. 12" SD IE=105.29
10" SS IE=102.82
14. 12" SD IE=105.37
4" SSFM IE=108.0±
15. 12" SD IE=105.40
6" SSFM-VERIFY IE
16. 10" SD IE=105.78
16" SSFM - VERIFY IE
17. 10" SD IE=105.95
16" SS IE=107.41
18. 10" SD IE=106.20
WTR-VERIFY SIZE AND IE
19. 10" SD IE=107.59
42" SD IE=103.00
20. 10" SD IE=108.21
(2) G-VERIFY SIZE AND IE
21. 10" SD IE=109.12
WTR-VERIFY SIZE AND IE
22. 10" SD IE=109.16
WTR-VERIFY SIZE AND IE

90% PLANS - PRELIMINARY

DESIGNED	ASZ
DRAWN	ASZ
CRP	321222
HOR.	1" = 20'
VERT.	NA
DATE	11/04
DWG:	SD1
SHEET	41 OF 105

CALL 48 HOURS BEFORE YOU DIG
1-800-553-4344
"It's the Law"
NORTHWEST UTILITIES NOTIFICATION CENTER

DESIGN & ENGINEERING DIVISION
DESIGN SECTION

BETTS BRIDGE #26 REPLACEMENT (SALMON CREEK AVE.)
STORMWATER PLAN & PROFILE (51+80 TO 55+50)

proud past, promising future
CLARK COUNTY
WASHINGTON

FEDERAL AID # BRM-4231(004)

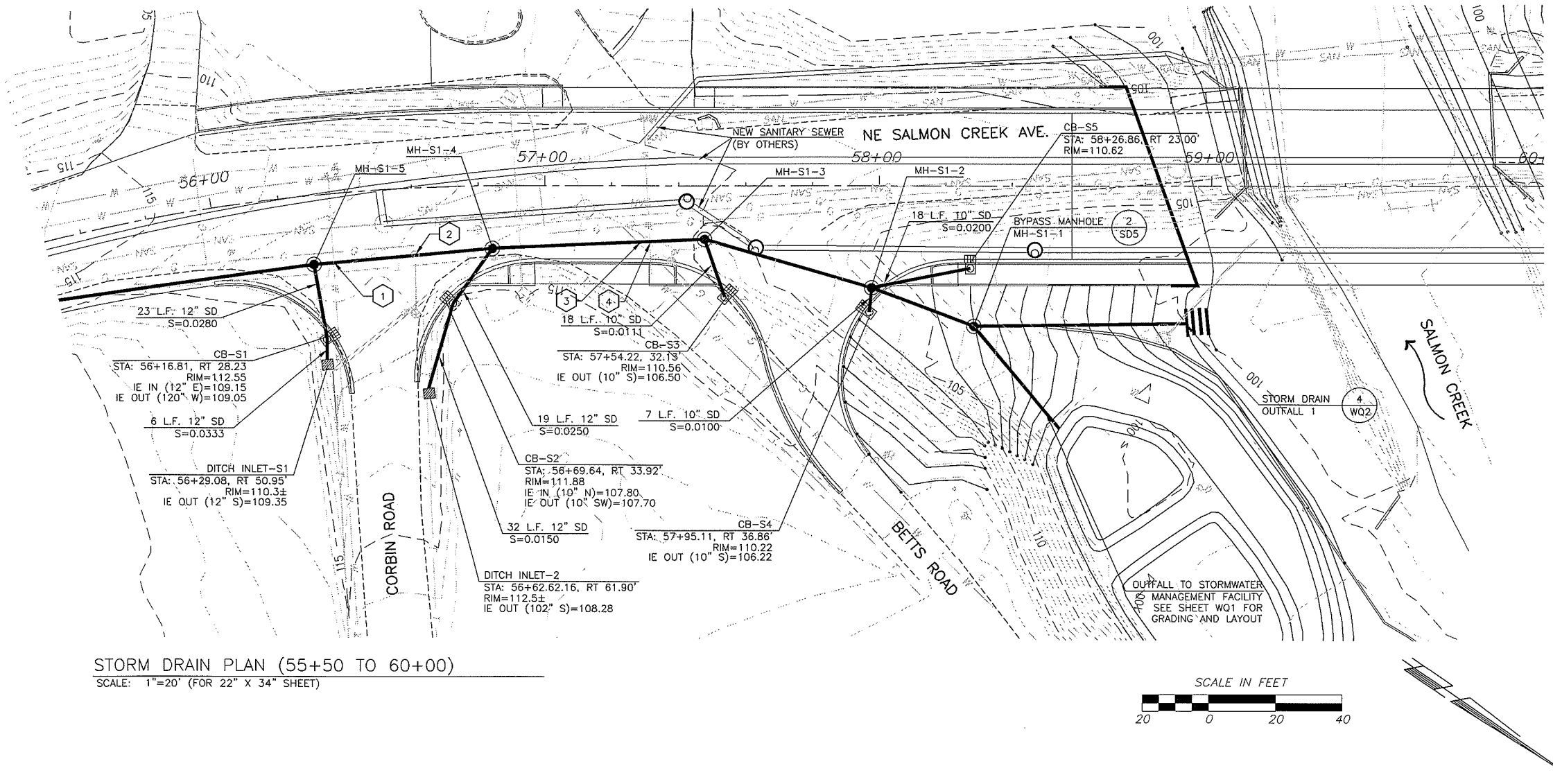

STORM DRAIN PLAN (55+50 TO 60+00)

SCALE: 1"=20' (FOR 22" X 34" SHEET)

SCALE IN FEET

20 0 20 40

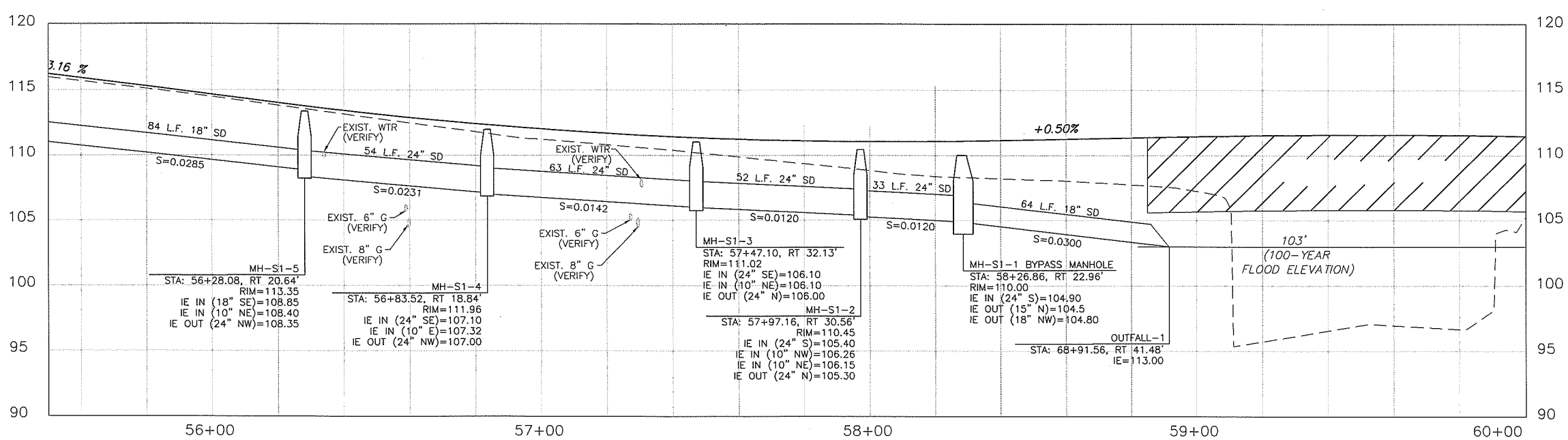

STORM DRAIN PROFILE (55+50 TO 60+00)

HORZ. SCALE: 1"=20' (FOR 22" X 34" SHEET)
VERT. SCALE: 1"=5' (FOR 22" X 34" SHEET)

UTILITY NOTES:

1. EXISTING UTILITIES BASED UPON LOCATES PERFORMED BY WSDOT, AS-BUILTS FROM HAZEL DELL SEWER, FIELD REVIEWS, AND SURVEY DATA PROVIDED BY CLARK COUNTY, WASHINGTON.
2. LOCATE INFORMATION SUPERCEDED AS-BUILT INFORMATION WHERE DISCREPENCIES OCCURRED.
3. NO AS-BUILT INFORMATION WAS AVAILABLE FOR THE BATTLEGROUND SANITARY SEWER LINE.
4. REFER TO SHEET SD5 FOR CLARK COUNTY'S GENERAL STORM DRAINAGE NOTES.

UTILITY CONTACTS:

SAN. SEWER – HAZEL DELL SEWER DIST. (360-750-5876)
BATTLEGROUND SEWER (360-342-5060)

GAS – NW NATURAL GAS (800-233-3111)

WATER – CLARK PUBLIC UTILITIES (360-992-8022)

PHONE/CABLE/TV – COMCAST (XXX-XXX-XXXX)
QWEST (360-699-3546,3553)
AT&T (XXX-XXX-XXXX)

ELECTRICAL – CLARK PUBLIC UTILITIES (360-992-8808)

NORTHWEST UTILITY NOTIFICATION CENTER (ONE CALL CENTER) – 800-553-4344

UTILITY CROSSINGS:

1. 24" SD IE=108.19 WTR-VERIFY SIZE AND IE
2. 24" SD IE=107.63 G-VERIFY SIZE AND IE
3. 24" SD IE=106.38 (2) G-VERIFY SIZE AND IE
4. 24" SD IE=106.33 WTR-VERIFY
5. 10" SD IE=104.68 G-VERIFY SIZE AND IE
6. 10" SD IE=104.52 G-VERIFY SIZE AND IE
7. 18" SD IE=103.72 (2) G-VERIFY SIZE AND IE
8. 10" SD IE=104.98 (2) G-VERIFY SIZE AND IE
9. 10" SD IE=104.45 16" SSFM-VERIFY IE
10. 10" SD IE=105.20 8" SS IE=104.15
11. 10" SD IE=105.35 18" SS IE=106.55
12. 10" SD IE=105.57 WTR-VERIFY SIZE AND IE
13. 12" SD IE=105.29 10" SS IE=102.82
14. 12" SD IE=105.37 4" SSFM IE=108.0±
15. 12" SD IE=105.40 6" SSFM-VERIFY IE
16. 10" SD IE=105.78 16" SSFM – VERIFY IE
17. 10" SD IE=105.95 16" SS IE=107.41
18. 10" SD IE=106.20 WTR-VERIFY SIZE AND IE
19. 10" SD IE=107.59 42" SD IE=103.00
20. 10" SD IE=108.21 (2) G-VERIFY SIZE AND IE
21. 10" SD IE=109.12 WTR-VERIFY SIZE AND IE
22. 10" SD IE=109.16 WTR-VERIFY SIZE AND IE

90% PLANS - PRELIMINARY

DESIGNED	ASZ
DRAWN	ASZ
CRP	321222
HOR.	1" = 20'
VERT.	NA
DATE	11/04
DWG:	SD2
SHEET	42 OF 105

CALL 48 HOURS BEFORE YOU DIG 1-800-553-4344 "It's the Law" NORTHWEST UTILITIES NOTIFICATION CENTER

DESIGN & ENGINEERING DIVISION
DESIGN SECTION

BETTS BRIDGE #26 REPLACEMENT (SALMON CREEK AVE.)
STORMWATER PLAN & PROFILE (55+50 TO 60+00)

proud past, promising future
CLARK COUNTY WASHINGTON

FEDERAL AID # BRM-4231(004)

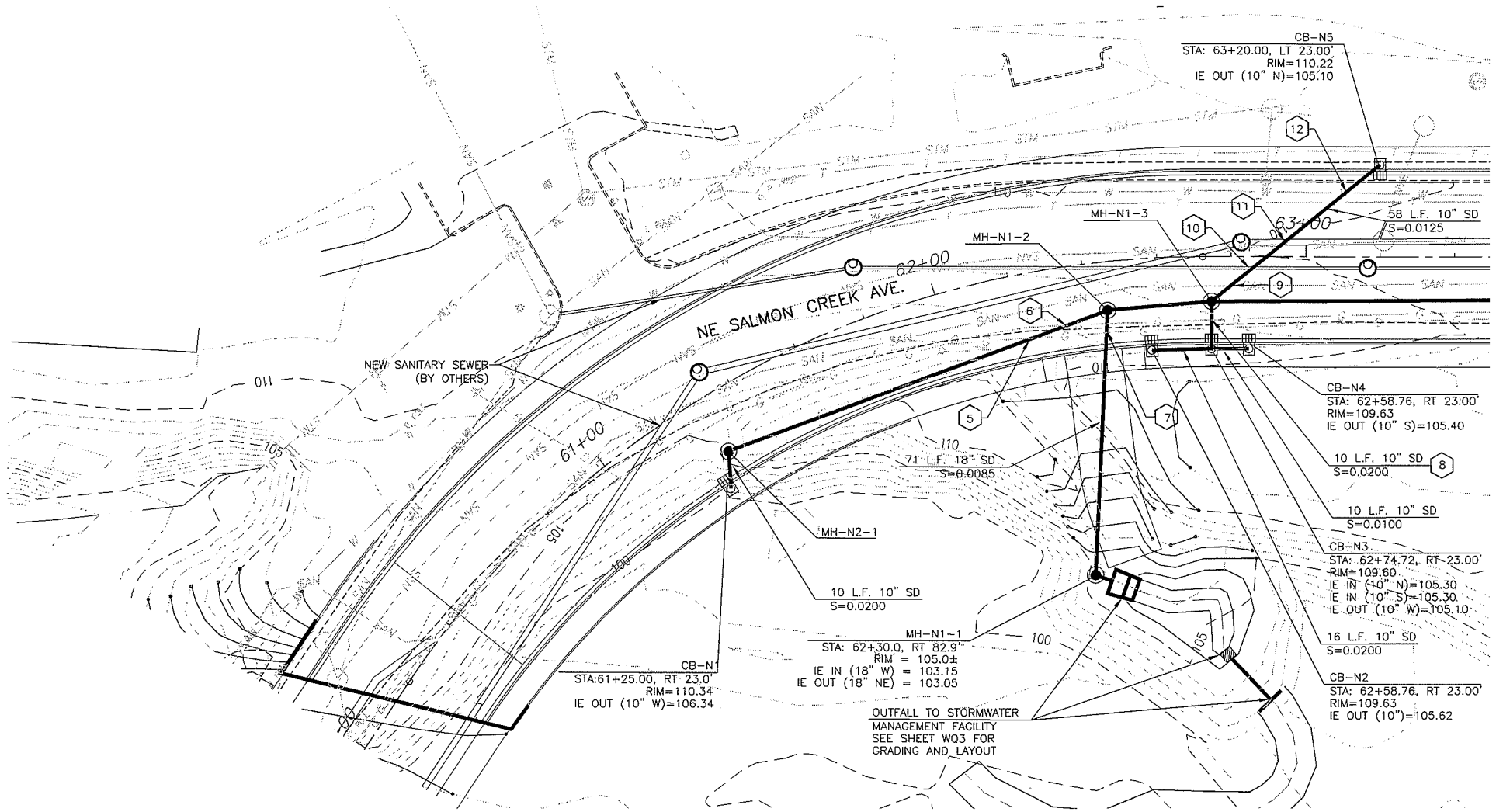

STORM DRAIN PLAN (60+00 TO 63+50)

SCALE: 1"=20' (FOR 22" X 34" SHEET)

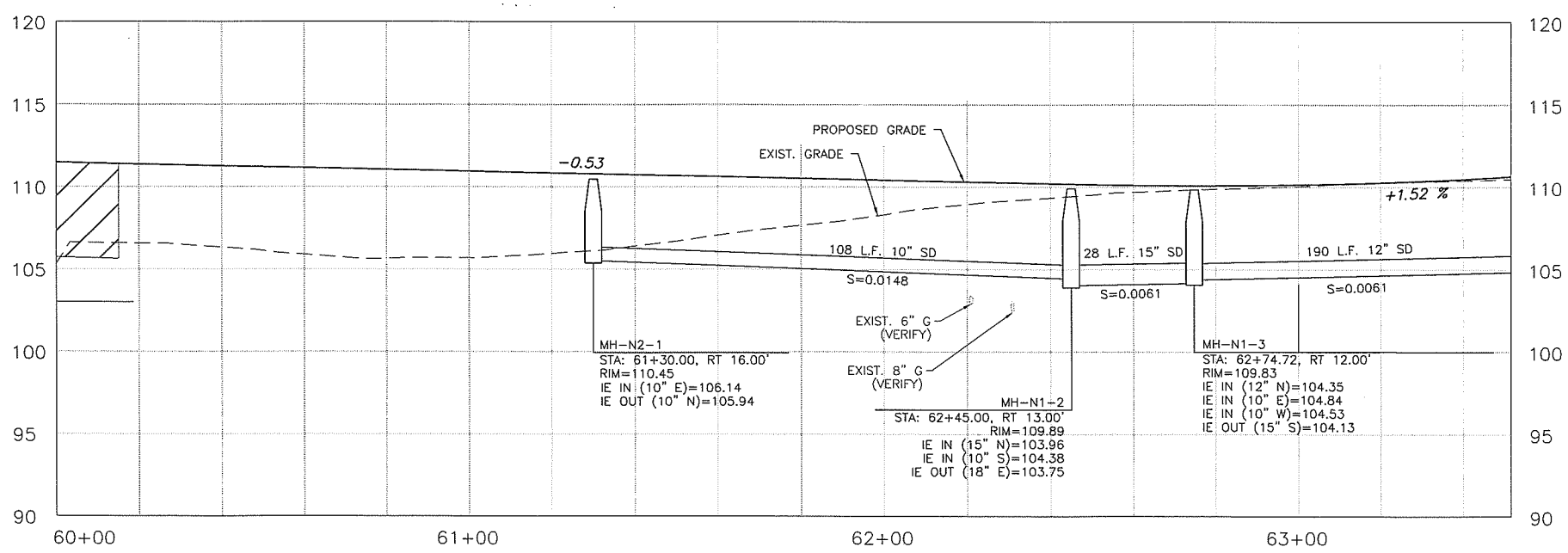

STORM DRAIN PROFILE (60+00 TO 63+50)

HORZ. SCALE: 1"=20' (FOR 22" X 34" SHEET)
VERT. SCALE: 1"=5' (FOR 22" X 34" SHEET)

UTILITY NOTES:

1. EXISTING UTILITIES BASED UPON LOCATES PERFORMED BY WSDOT, AS-BUILTS FROM HAZEL DELL SEWER, FIELD REVIEWS, AND SURVEY DATA PROVIDED BY CLARK COUNTY, WASHINGTON.
2. LOCATE INFORMATION SUPERCEDED AS-BUILT INFORMATION WHERE DISCREPENCIES OCCURRED.
3. NO AS-BUILT INFORMATION WAS AVAILABLE FOR THE BATTLEGROUND SANITARY SEWER LINE.
4. REFER TO SHEET SD5 FOR CLARK COUNTY'S GENERAL STORM DRAINAGE NOTES.

UTILITY CONTACTS:

SAN. SEWER – HAZEL DELL SEWER DIST. (360-750-5876)
BATTLEGROUND SEWER (360-342-5060)

GAS – NW NATURAL GAS (800-233-3111)

WATER – CLARK PUBLIC UTILITIES (360-992-8022)

PHONE/CABLE/TV – COMCAST (XXX-XXX-XXXX)
QWEST (360-699-3546,3553)
AT&T (XXX-XXX-XXXX)

ELECTRICAL – CLARK PUBLIC UTILITIES (360-992-8808)

NORTHWEST UTILITY NOTIFICATION CENTER (ONE CALL CENTER) – 800-553-4344

UTILITY CROSSINGS:

1. 24" SD IE=108.19 WTR-VERIFY SIZE AND IE
2. 24" SD IE=107.63 G-VERIFY SIZE AND IE
3. 24" SD IE=106.38 (2) G-VERIFY SIZE AND IE
4. 24" SD IE=106.33 WTR-VERIFY
5. 10" SD IE=104.68 G-VERIFY SIZE AND IE
6. 10" SD IE=104.52 G-VERIFY SIZE AND IE
7. 18" SD IE=103.72 (2) G-VERIFY SIZE AND IE
8. 10" SD IE=104.98 (2) G-VERIFY SIZE AND IE
9. 10" SD IE=104.45 16" SSFM-VERIFY IE
10. 10" SD IE=105.20 8" SS IE=104.15
11. 10" SD IE=105.35 18" SS IE=106.55
12. 10" SD IE=105.57 WTR-VERIFY SIZE AND IE
13. 12" SD IE=105.29 10" SS IE=102.82
14. 12" SD IE=105.37 4" SSFM IE=108.0±
15. 12" SD IE=105.40 6" SSFM-VERIFY IE
16. 10" SD IE=105.78 16" SSFM – VERIFY IE
17. 10" SD IE=105.95 16" SS IE=107.41
18. 10" SD IE=106.20 WTR-VERIFY SIZE AND IE
19. 10" SD IE=107.59 42" SD IE=103.00
20. 10" SD IE=108.21 (2) G-VERIFY SIZE AND IE
21. 10" SD IE=109.12 WTR-VERIFY SIZE AND IE
22. 10" SD IE=109.16 WTR-VERIFY SIZE AND IE

90% PLANS - PRELIMINARY

DESIGNED	ASZ
DRAWN	ASZ
CRP	321222
HOR.	1" = 20'
VERT.	NA
DATE	11/04
DWG:	SD3
SHEET	43 OF 105

CALL 48 HOURS BEFORE YOU DIG
1-800-553-4344
"It's the Law"
NORTHWEST UTILITIES NOTIFICATION CENTER

DESIGN & ENGINEERING DIVISION
DESIGN SECTION

BETTS BRIDGE #26 REPLACEMENT (SALMON CREEK AVE.)
STORMWATER PLAN & PROFILE (60+00 TO 63+50)

proud past, promising future
CLARK COUNTY
WASHINGTON

FEDERAL AID # BRM-4231(004)

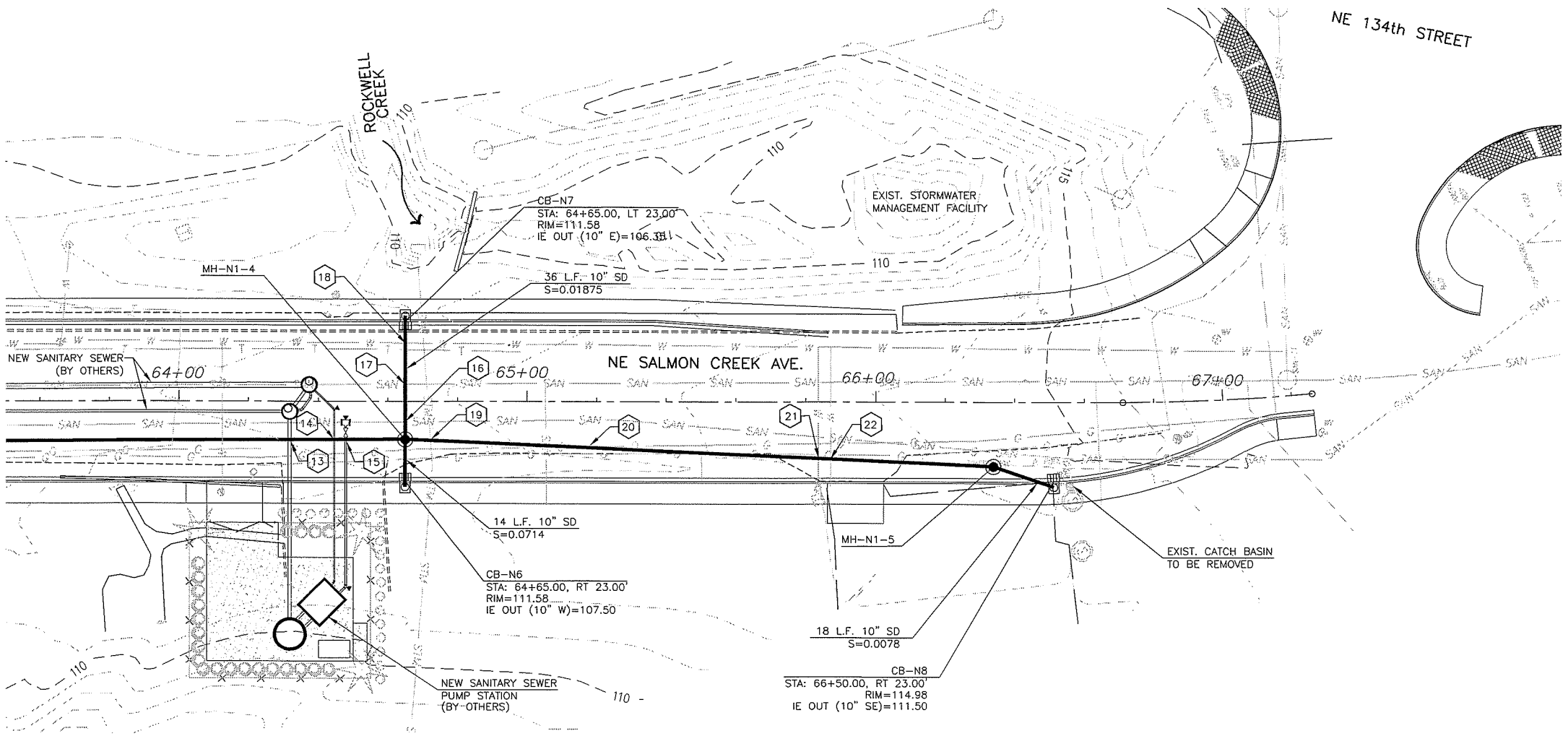

STORM DRAIN PLAN (63+50 TO 67+25)

SCALE: 1"=20' (FOR 22" X 34" SHEET)

SCALE IN FEET

20 0 20 40

UTILITY NOTES:

1. EXISTING UTILITIES BASED UPON LOCATES PERFORMED BY WSDOT, AS-BUILTS FROM HAZEL DELL SEWER, FIELD REVIEWS, AND SURVEY DATA PROVIDED BY CLARK COUNTY, WASHINGTON.
2. LOCATE INFORMATION SUPERCEDED AS-BUILT INFORMATION WHERE DISCREPENCIES OCCURRED.
3. NO AS-BUILT INFORMATION WAS AVAILABLE FOR THE BATTLEGROUND SANITARY SEWER LINE.
4. REFER TO SHEET S05 FOR CLARK COUNTY'S GENERAL STORM DRAINAGE NOTES.

UTILITY CONTACTS:

SAN. SEWER – HAZEL DELL SEWER DIST. (360-750-5876)
BATTLEGROUND SEWER (360-342-5060)

GAS – NW NATURAL GAS (800-233-3111)

WATER – CLARK PUBLIC UTILITIES (360-992-8022)

PHONE/CABLE/TV – COMCAST (XXX-XXX-XXXX)
QWEST (360-699-3546,3553)
AT&T (XXX-XXX-XXXX)

ELECTRICAL – CLARK PUBLIC UTILITIES (360-992-8808)

NORTHWEST UTILITY NOTIFICATION CENTER (ONE CALL CENTER) – 800-553-4344

UTILITY CROSSINGS:

1. 24" SD IE=108.19 WTR-VERIFY SIZE AND IE
2. 24" SD IE=107.63 G-VERIFY SIZE AND IE
3. 24" SD IE=106.38 (2) G-VERIFY SIZE AND IE
4. 24" SD IE=106.33 WTR-VERIFY
5. 10" SD IE=104.68 G-VERIFY SIZE AND IE
6. 10" SD IE=104.52 G-VERIFY SIZE AND IE
7. 18" SD IE=103.72 (2) G-VERIFY SIZE AND IE
8. 10" SD IE=104.98 (2) G-VERIFY SIZE AND IE
9. 10" SD IE=104.45 16" SSFM-VERIFY IE
10. 10" SD IE=105.20 8" SS IE=104.15
11. 10" SD IE=105.35 18" SS IE=106.55
12. 10" SD IE=105.57 WTR-VERIFY SIZE AND IE
13. 12" SD IE=105.29 10" SS IE=102.82
14. 12" SD IE=105.37 4" SSFM IE=108.0±
15. 12" SD IE=105.40 6" SSFM-VERIFY IE
16. 10" SD IE=105.78 16" SSFM – VERIFY IE
17. 10" SD IE=105.95 16" SS IE=107.41
18. 10" SD IE=106.20 WTR-VERIFY SIZE AND IE
19. 10" SD IE=107.59 42" SD IE=103.00
20. 10" SD IE=108.21 (2) G-VERIFY SIZE AND IE
21. 10" SD IE=109.12 WTR-VERIFY SIZE AND IE
22. 10" SD IE=109.16 WTR-VERIFY SIZE AND IE

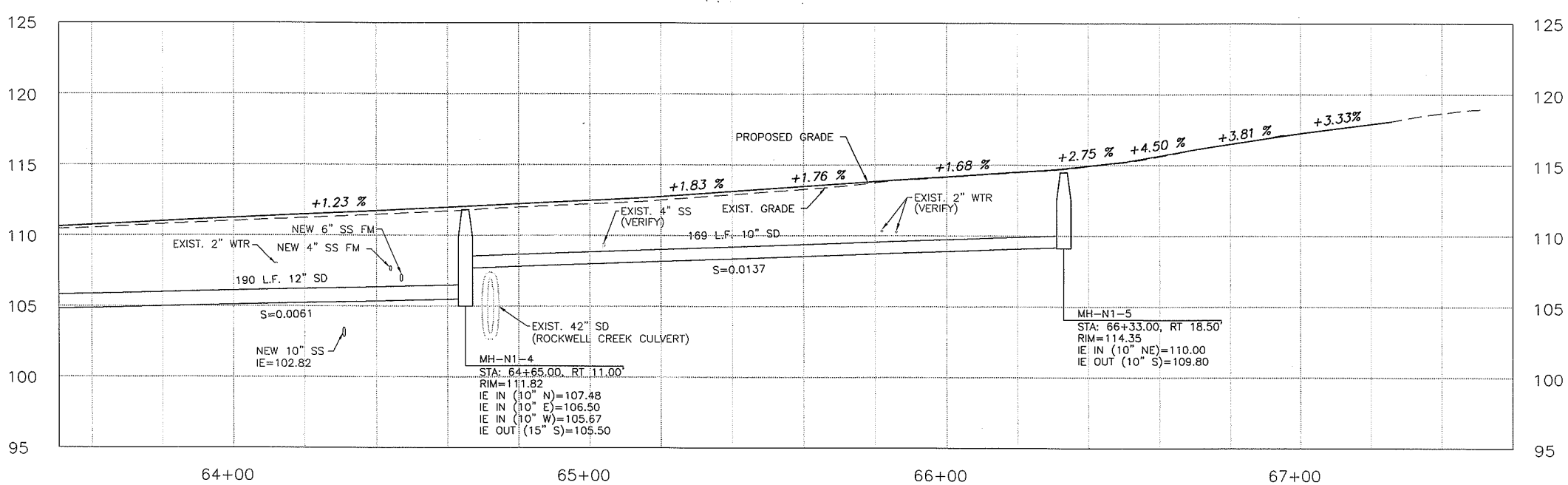

STORM DRAIN PROFILE (63+50 TO 67+25)

HORZ. SCALE: 1"=20' (FOR 22" X 34" SHEET)
VERT. SCALE: 1"=5' (FOR 22" X 34" SHEET)

90% PLANS - PRELIMINARY

DESIGNED	ASZ
DRAWN	ASZ
CRP	321222
HOR.	1" = 20'
VERT.	NA
DATE	11/04
DWG:	S04
SHEET	44 OF 105

CALL 48 HOURS BEFORE YOU DIG
1-800-553-4344
"It's the Law"
NORTHWEST UTILITIES NOTIFICATION CENTER

DESIGN & ENGINEERING DIVISION
DESIGN SECTION

BETTS BRIDGE #26 REPLACEMENT (SALMON CREEK AVE.)
STORMWATER PLAN & PROFILE (63+50 TO 67+25)

proud past, promising future
CLARK COUNTY WASHINGTON

FEDERAL AID # BRM-4231(004)

STORM DRAIN GENERAL NOTES:

1. MATERIALS AND WORKMANSHIP FOR STREET AND DRAINAGE WORK SHALL CONFORM TO THE LATEST EDITION OF THE WSDOT/APWA "STANDARD SPECIFICATIONS FOR ROAD, BRIDGE AND MUNICIPAL CONSTRUCTION" (CCC 40.380.040(A)), AND STANDARD DETAIL SHEETS ATTACHED HEREWITH.

2. PROOF OF LIABILITY INSURANCE IN THE AMOUNT OF FIVE HUNDRED THOUSAND DOLLARS ($500,000) SHALL BE SUBMITTED TO CLARK COUNTY DEPARTMENT OF COMMUNITY DEVELOPMENT, DIVISION OF ENGINEERING SERVICES PRIOR TO THE PRE-CONSTRUCTION MEETING (CCC40.380.050(E)).

3. PRECAST DRAINAGE STRUCTURES PREVIOUSLY APPROVED BY WASHINGTON DEPARTMENT OF TRANSPORTATION AND THE CLARK COUNTY PUBLIC WORKS DEPARTMENT MAY BE SUBSTITUTED FOR ANY NEW STANDARD CAST-IN-PLACE UNIT. HOWEVER, IT IS THE CONTRACTOR'S RESPONSIBILITY TO ASSURE THAT THE PRECAST DRAINAGE STRUCTURES COMPLY WITH THE DESIGN INVERTS AND RIM ELEVATIONS.

4. THE CONTRACTOR IS TO VERIFY ALL INVERT AND TOP ELEVATIONS OF EXISTING STORM DRAINS, AND REPORT ANY DISCREPANCIES IMMEDIATELY TO THE ENGINEER.

5. CONTRACTOR TO VERIFY CENTERLINE AND TOP OF THE CURB ELEVATIONS PRIOR TO CONSTRUCTION TO ENSURE COMPLIANCE WITH THE CONSTRUCTION DRAWINGS AND REPORT ANY DISCREPANCIES IMMEDIATELY TO THE ENGINEER.

6. THE CONTRACTOR SHALL BE RESPONSIBLE FOR DETERMINING THE LOCATION OF ALL UNDERGROUND UTILITIES PRIOR TO THE START OF CONSTRUCTION AND TO NOTIFY THE ENGINEER OF ANY POTENTIAL CONFLICTS. THE CONTRACTOR SHALL DIG TEST HOLES OVER ALL EXISTING UTILITIES PRIOR TO CONSTRUCTION TO DETERMINE THEIR EXACT LOCATION. CALL (360) 696-4848 FOR UTILITIES LOCATE, A MINIMUM OF 48 HOURS PRIOR TO START OF CONSTRUCTION.

7. IT SHALL BE THE RESPONSIBILITY OF THE DEVELOPER AND/OR CONTRACTOR TO PROCURE ALL APPLICABLE PERMITS, LICENSES AND CERTIFICATES RELATIVE TO THE TRADES TO COMPLETE THE PROJECT AND FOR THE USE OF SUCH WORK WHEN COMPLETED. COMPLIANCE SHALL BE AT ALL LEVELS: FEDERAL, STATE AND COUNTY RELATING TO THE PERFORMANCE OF THIS WORK.

8. ALL EROSION CONTROL DEVICES SHALL BE CONSTRUCTED IN ACCORDANCE WITH THE EROSION CONTROL PLAN AND EROSION CONTROL DETAILS, PRIOR TO START OF CONSTRUCTION (CCC 40.380.060(E)).

9. THE CONTRACTOR SHALL SUBMIT A TRAFFIC CONTROL PLAN. THIS PLAN SHALL BE APPROVED BY PUBLIC WORKS-TRANSPORTATION SYSTEMS DIVISION (397-2375 X4523). APPROVAL SHALL BE OBTAINED PRIOR TO THE PRE-CONSTRUCTION MEETING AND START OF CONSTRUCTION.

10. THE DEVELOPER SHALL OBTAIN ALL OFFSITE CONSTRUCTION EASEMENTS PRIOR TO THE START OF CONSTRUCTION. THE APPLICANT SHALL VERIFY THAT ALL OFFSITE UTILITES EASEMENTS HAVE BEEN OBTAINED BY THE OWNER PRIOR TO PLAN APPROVAL FOR OFFSITE CONSTRUCTION.

11. ALL CATCH BASINS AND MANHOLES CAPABLE OF ACCEPTING STORMWATER SHALL BE STENCILED AS FOLLOW PER CCC 40.380.040(B)(10)(a & b).

INFILTRATION SYSTEMS - "PLEASE PROTECT - DRAINS TO DRINKING WATER"
ALL OTHER SYSTEMS - "PLEASE PROTECT - DRAINS TO STREAM"

12. PER CCC 40.380.040(B)(10)(c & d) SIGNS SHALL BE INSTALLED AS FOLLOWS:

ALONG WATER QUALITY BIOFILTRATION SYSTEMS TO READ
"WATER QUALITY FILTER - PLEASE LEAVE VEGETATED"

FENCED RETENTION AND RETENTION BASINS TO READ
"[PUBLIC/PRIVATE] STORMWATER CONTROL FACILITY"

STENCILING COLORS SHALL BE BLUE BACKGROUND W/ WHITE LETTERING

CONTACT COUNTY INSPECTION AT 397-2375 EXT. 4995 FOR STENCILING STANDARDS

PRIVATE SYSTEMS NOT MAINTAINED BY CLARK COUNTY SHALL INCLUDE ADDRESS AND CONTACT INFORMATION OF RESPONSIBLE PARTY.

13. VEGETATION IN BIOFILTRATION SYSTEMS SHALL BECOME FULLY ESTABLISHED PRIOR TO COMMENCING WITH INSTALLATION OF A.C. PAVEMENT FOR ALL AREAS DRAINING INTO THE WATER QUALITY SYSTEM. WATER QUALITY SWALES SHOULD BE GENERALLY VEGETATED WITH RECOMMENDED GRASSES IN THE SWALE BOTTOM; GRASSES, GROUND COVER, AND SHRUBS ON THE SIDE SLOPES; AND GROUND COVERS, SHRUBS, AND TREES ON THE ADJACENT DRY AREAS. PLANTING PLANS MUST BE INDIVIDUALLY TAILORED TO UNIQUE CONDITIONS AT EACH SITE.

SHEET 1 OF 2

NO.	REVISIONS	DATE	BY

DWG: D1-0.DWG

Department of Public Works
CLARK COUNTY WASHINGTON
proud past, promising future

STORM DRAIN GENERAL NOTES
APPROVED
Peter Capell — COUNTY ENGINEER — 01/01/04 DATE
STANDARD D1.0
PLAN No.
DESIGNED SCH
DRAWN SCH
DATE 07/10/03

STORM DRAIN GENERAL NOTES -CONTINUED-:

14. PER CCC 40.380.040(C)(1)(b) & 14.04.252, ALL LOTS WITHIN THE URBAN GROWTH AREA MUST BE DESIGNED TO PROVIDE POSITIVE DRAINAGE FROM BOTTOM OF FOOTINGS TO AN APPROVED STORMWATER SYSTEM. POSITIVE DRAINAGE MAY BE ACCOMPLISHED BY THE USE OF SWALES, DRYWELLS, FRENCH DRAINS, LATERAL TO THE STREET, LATERALS BEHIND THE CURB OR WITHIN A PUBLIC UTILITY EASEMENT, AN APPROVED BACKYARD OR SIDE YARD SYSTEM, OR SOME OTHER METHOD ACCEPTABLE TO THE BUILDING OFFICIAL AND/OR DIRECTOR. STUB-OUTS (LATERALS) SHALL CONFORM TO THE FOLLOWING:

a) EACH OUTLET SHALL BE SUITABLY LOCATED AT THE LOWEST ELEVATION ON THE LOT, SO AS TO SERVICE ALL FUTURE ROOF DOWN SPOUTS AND FOOTING DRAINS, DRIVEWAYS, YARD DRAINS, AND ANY OTHER SUBSURFACE DRAINS NECESSARY TO RENDER THE LOTS SUITABLE FOR THEIR INTENDED USE. EACH OUTLET SHALL HAVE FREE-FLOWING, POSITIVE DRAINAGE TO AN APPROVED STORMWATER CONVEYANCE SYSTEM OR TO AN APPROVED OUTFALL LOCATION.

b) THE STUB-OUT I.E. ON EACH LOT SHALL BE LOCATED WITH A FIVE-FOOT-HIGH, 2"x 4" STAKE MARKED "DRAIN", WITH PIPE AND STAKE ADEQUATELY WRAPPED WITH COPPER LOCATOR WIRE.

c) STUB-OUT TO BE 6" MINIMUM DIAMETER, CORRUGATED POLYETHYLENE STORM SEWER PIPE (N-12), AT 2 % MINIMUM SLOPE. PIPE SHALL CONTAIN WIRE OR OTHER ACCEPTABLE DETECTION.

d) DRAINAGE EASEMENTS ARE REQUIRED FOR DRAINAGE SYSTEMS DESIGNED TO CONVEY FLOWS THROUGH INDIVIDUAL LOTS.

e) THE APPLICANT/CONTRACTOR IS RESPONSIBLE FOR COORDINATING THE PROPER LOCATION OF ALL STUB-OUT CONVEYANCE LINES WITH RESPECT TO UTILITIES (e.g., power, gas, telephone, television, etc.), AND FOR AS BUILT PLANS.

f) ALL INDIVIDUAL STUB-OUTS SHALL BE PRIVATELY OWNED AND MAINTAINED BY THE LOT OWNER, TO ITS CONNECTION WITH THE MAIN.

16. PRIVATE SYSTEMS MUST MEET PLUMBING CODE, HAVE AN OPERATIONS AND MAINTENANCE MANUAL, MAINTENANCE COVENANT OVER THE REQUIRED EASEMENT, AND COVENANT TO CLARK COUNTY FOR INSPECTION AND REVIEW.

SHEET 2 OF 2

NO.	REVISIONS	DATE	BY

DWG: D1-0.DWG

Department of Public Works
CLARK COUNTY WASHINGTON
proud past, promising future

STORM DRAIN GENERAL NOTES -CONTINUED-
APPROVED
Peter Capell — COUNTY ENGINEER — 01/01/04 DATE
STANDARD D1.0
PLAN No.
DESIGNED SCH
DRAWN SCH
DATE 07/07/03

CLARK COUNTY GENERAL STORM DRAIN NOTES

OPEN CUT UTILITY TRENCH BACKFILL DETAIL (COLLECTOR OR ARTERIAL)

SURFACING:

1. All A.C.P. shall be saw cut to provide a straight, clean edge prior to paving.
2. The cut line shall be one continuous straight line from the outer excavation limits of manhole, valve box, etc. to manhole, valve box, etc.
3. Pave with an 0.5 ft. minimum compacted depth A.C.P., or match existing or design section, whichever is greater.
4. Lifts for A.C.P. (Class A) shall be 0.15 ft. minimum and 0.35 ft. maximum for non-surface lifts (0.25' maximum for surface lift); the temperature shall be 250 degree minimum, 350 degree maximum, compacted to 92% of the theoretical maximum.
5. All joints shall be tacked, sealed and sanded.
6. Trench shall be plated until paved.
7. For longitudinal installation, full lane width including turn lanes restoration shall be required or as directed by Clark County. For transverse installation refer to surfacing restoration of detail U6. See Section 12.20A.120.C.

BASE COURSE:

1. 0.80 ft. minimum depth (1-1/4" minus) C.S.B.C. (W.S.D.O.T. approved material).
2. Compacted to 95% of maximum density. See trench zone.
3. Equivalent depth of A.T.B. may be substituted.
4. For transverse or diagonal trenches in existing roadway pavement, CDF will be used from the bottom of full pavement section to a maximum CDF section of 3 feet or to 6" above the top of the pipe, which ever is less. See note 13 of Std. Plan UGN of this Manual.

TRENCH ZONE:

1. Granular backfill as approved by local agency or W.S.D.O.T. specifications for granular backfill. Compacted to 95% of maximum density in the trench zone using Method C compaction as per Section 2-03.3(14)C.
2. Native material may be used if approved prior to construction by Clark County.
3. Trench zone width -- see below.

PIPE ZONE:

1. Pipe zone material as specified by utility owner, and shall conform to section 9-03.12(3) WSDOT Specs.
2. 1.0 ft. max. from top of the pipe. 6" from top of pipe when CDF backfill used.

CONDITIONS:

1. A copy of the permit and requirements shall be on the job site at all times.
2. The permit holder shall be responsible for all restoration and maintenance of ditches, shoulders, driveways, landscaping, etc.
3. Call Clark County at 397-2446 twenty-four hours prior to commencing work.

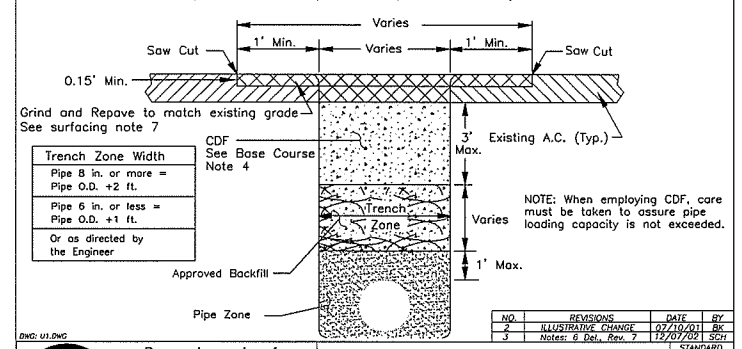

DWG: U1.DWG

NO.	REVISIONS	DATE	BY
2	ILLUSTRATIVE CHANGE	02/10/01	BK
3	Notes: 6 Del., Rev. 7	12/07/01	SCH

Department of Public Works
CLARK COUNTY WASHINGTON
proud past, promising future

OPEN CUT UTILITY TRENCH BACKFILL DETAIL
COLLECTOR OR ARTERIAL ROADWAY
APPROVED
Peter Capell — COUNTY ENGINEER — 7/20/01 DATE
STANDARD U1
PLAN No.
DESIGNED
DRAWN
DATE 04/25/03

1 OPEN CUT UTILITY TRENCH BACKFILL DETAIL
SCALE: NTS

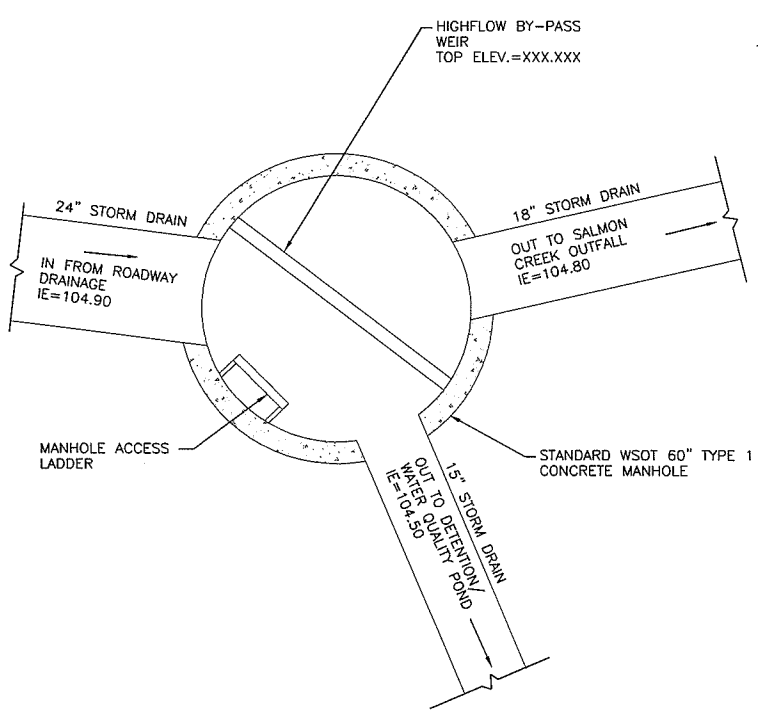

2 BY-PASS MANHOLE
SCALE: NTS

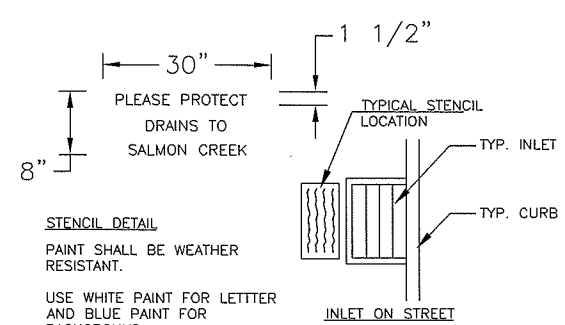

STENCIL DETAIL

PAINT SHALL BE WEATHER RESISTANT.

USE WHITE PAINT FOR LETTTER AND BLUE PAINT FOR BACKGROUND.

CLEAN SURFACE THOROUGHLY BEFORE APPLYING PAINT.

NOTES

1. FOR FACILITIES DRAINING TO SURFACE WATERS THE STENCILING SHALL READ: "PLEASE PROTECT-DRAINS TO SALMON CREEK".
2. SIGNS SHALL BE INSTALLED ALONG WATER QUALITY BIOFILTRATION SYSTEMS THAT READ: "WATER QUALITY FILTER-PLEASE LEAVE VEGETATED".
3. FENCED DETENTION AND RETENTION BASINS SHALL BE MARKED WITH A SIGN THAT READS: "PUBLIC STORMWATER CONTROL FACILITY".

3 INLET STENCIL DETAIL
SCALE: NTS

90% PLANS - PRELIMINARY

DESIGNED	ASZ
DRAWN	ASZ
CRP	321222
HOR.	NA
VERT.	NA
DATE	11/04
DWG:	SD5
SHEET 45 OF 105	

CALL 48 HOURS BEFORE YOU DIG
1-800-553-4344
"It's the Law"
NORTHWEST UTILITIES NOTIFICATION CENTER

DESIGN & ENGINEERING DIVISION
DESIGN SECTION

BETTS BRIDGE #26 REPLACEMENT (SALMON CREEK AVE.)
STORMWATER DETAILS - SHEET 1

proud past, promising future
CLARK COUNTY WASHINGTON

FEDERAL AID # BRM-4231(004)

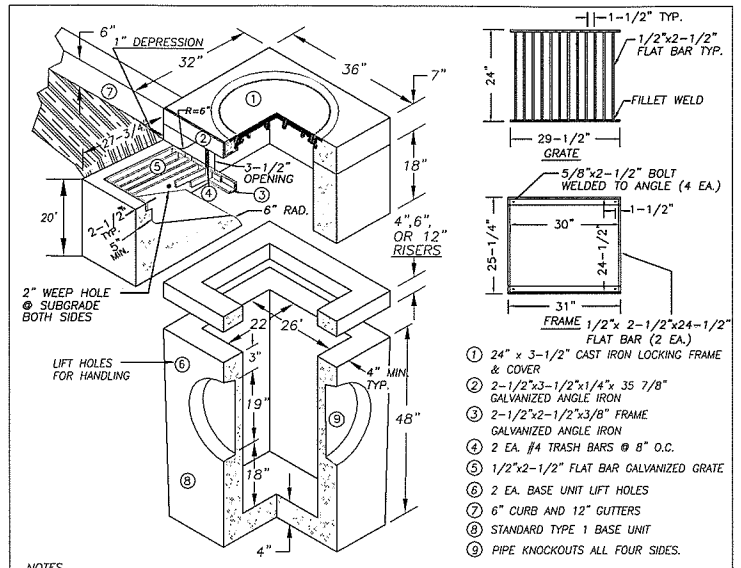

1. 24" x 3-1/2" CAST IRON LOCKING FRAME & COVER
2. 2-1/2"x3-1/2"x1/4"x 35 7/8" GALVANIZED ANGLE IRON
3. 2-1/2"x2-1/2"x3/8" FRAME GALVANIZED ANGLE IRON
4. 2 EA. #4 TRASH BARS @ 8" O.C.
5. 1/2"x2-1/2" FLAT BAR GALVANIZED GRATE
6. 2 EA. BASE UNIT LIFT HOLES
7. 6" CURB AND 12" GUTTERS
8. STANDARD TYPE 1 BASE UNIT
9. PIPE KNOCKOUTS ALL FOUR SIDES.

NOTES

1. COMBINATION CURB INLET TO BE CONSTRUCTED IN ACCORDANCE WITH ASTM C478 & C890 UNLESS SHOWN ON PLANS OR NOTED IN STANDARD SPECIFICATIONS.
2. REINFORCING FOR INLET UNIT, 3 EA. #4 HORZONTAL BARS; REINFORCING FOR TOP UNIT, 2 EA. #3 HORZONTAL BARS; REINFORCING FOR INLET SLOPED BASE, 4x4 MESH.
3. ALL REBAR TO MEET ASTM A615 GRADE 60.
4. AS AN ACCEPTABLE ALTERNATIVE TO REBAR, WELDED WIRE FABRIC HAVING A MIN. AREA OF 0.12 SOAURE INCHES PER FOOT MAY BE USED. WELDED WIRE FABRIC SHALL COMPLY TO ASTM A497. WIRE FABRIC SHALL NOT BE PLACED IN KNOCKOUTS.
5. ALL REINFORCED CAST-IN-PLACE CONCRETE SHALL BE CLASS 4,000.
6 PRECAST BASES SHALL BE FURNISHED WITH CUTOUTS OR KNOCKOUTS. KNOCKOUTS SHALL HAVE A WALL THICKNESS OF 2" MIN. ALL PIPE SHALL BE INSTALLED IN FACTORY PROVIDED KNOCKOUTS. UNUSED KNOCKOUTS NEED NOT BE GROUTED IF WALL IS LEFT INTACT.
7. KNOCKOUTS OR CUTOUT HOLE SIZE IS EQUAL TO PIPE OUTER DIAM. PLUS INLET WALL THICKNESS.
8. ROUND KNOCKOUTS MAY BE ON ALL 4 SIDES WITH MAX. DIAM. OF 17".
9. THE MAX. DEPTH FROM THE FINISHED GRADE TO THE PIPE INVERT IS 5'-0".
10. ANY PROTUDING ENDS OF PIPES SHALL BE TRIMMED FLUSH WITH THE INSIDE WALLS AND GROUTED TO THE SATISFACTION OF ENGINEER.
11. GRATE TO HAVE 1" DEPRESSION AT GUTTER INLET WITH GUTTER TO BE TAPERED DOWN TO INLET.
12. INSTALL REMOVABLE APWA TYPE 60A TRAP OR EQUAL. SEE STD. PLAN D2.1.
13. CONTRACTOR SHALL HAVE THE OPTION OF FURNISHING PRECAST OR CAST-IN-PLACE INLET STRUCTURES, UNLESS SPECIFIED.
14. SEE STD. PLAN 4.1 FOR BASIN GUTTER DETAIL.

NO.	REVISIONS	DATE	BY

DWG: D3-0.DWG

Department of Public Works
CLARK COUNTY WASHINGTON
proud past, promising future

STANDARD TYPE 1 COMBINATION CURB INLET

APPROVED

COUNTY ENGINEER — DATE

STANDARD D3.0
PLAN No.
DESIGNED SDI
DRAWN SDI
DATE 09/05/02

1 COMBINATION CURB INLET
SCALE: NTS

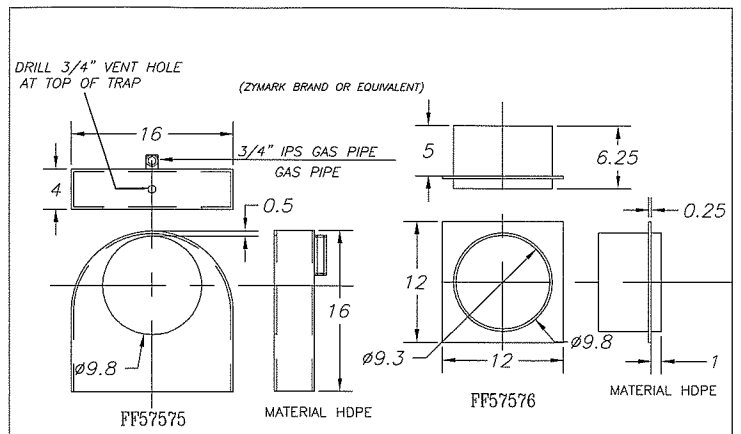

LOW PROFILE ELBOW
NTS

ELBOW INSERT
(ZYMARK BRAND OR EQUIVALENT)
NTS

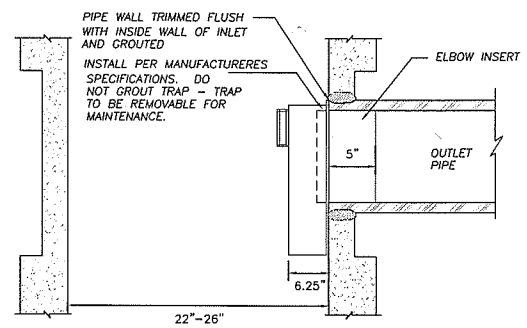

NO.	REVISIONS	DATE	BY

DWG: D2-1.DWG

Department of Public Works
CLARK COUNTY WASHINGTON
proud past, promising future

CATCH BASIN OUTLET PIPE TRAP

APPROVED

COUNTY ENGINEER — DATE

STANDARD D2.1
PLAN No.
DESIGNED SDI
DRAWN SDI
DATE 09/23/02

2 CATCH BASIN TRAP – STD. PLAN D2.1
SCALE: NTS

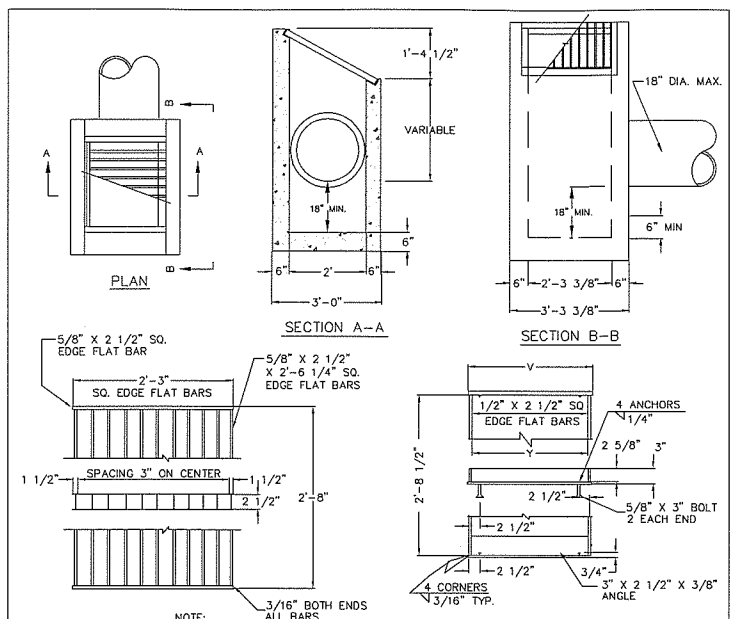

NOTE:
3/8" CROSS BARS SHALL BE FLUSH WITH THE GRATE SURFACE AND MAY BE FILLET WELDED, RESISTANCE WELDED OR ELECTROFORGED TO BEARING BARS.

DITCH INLET FRAME

INLET TYPE	V	Y	Y1	NO. OF BARS	TYPE
D	2'-4 3/4"	2'-3 3/8"	2'-3"	9	1

NOTES:

1. DITCH INLET CONSTRUCTION IN ACCORDANCE WITH ASTM C-478
2. CATCH BASIN, FRAME, AND GRATES SHALL BE FLAT BAR STEEL OR APPROVED EQUAL.
3. INSIDE FRAME DIMENSIONS: 2'-3 3/8"x 2'-8 1/2"".
4. INSTALL 8" OF 3/4" COMPACTED BASE MATERIAL.
5. PRECAST INLET SHALL HAVE 5" MIN. WALL THICKNESS, WITH REINFORCEMENT TO BE REBAR MEETING ASTM A615 GRADE 60 OR WELDED WIRE MEETING ASTM A497.

NO.	REVISIONS	DATE	BY

DWG: D6.DWG

Department of Public Works
CLARK COUNTY WASHINGTON
proud past, promising future

DITCH INLET

APPROVED

COUNTY ENGINEER — DATE

STANDARD D6
PLAN No.
DESIGNED SDI
DRAWN SDI
DATE 09/17/02

3 DITCH INLET
SCALE: NTS

90% PLANS - PRELIMINARY

DESIGNED	ASZ
DRAWN	ASZ
CRP	3212222
HOR.	NA
VERT.	NA
DATE	11/04
DWG:	SD6
SHEET	46 OF 105

CALL 48 HOURS BEFORE YOU DIG
1-800-553-4344
"It's the Law"
NORTHWEST UTILITIES NOTIFICATION CENTER

DESIGN & ENGINEERING DIVISION
DESIGN SECTION

BETTS BRIDGE #26 REPLACEMENT (SALMON CREEK AVE.)
STORMWATER DETAILS - SHEET 2

proud past, promising future
CLARK COUNTY WASHINGTON

FEDERAL AID # BRM-4231(004)

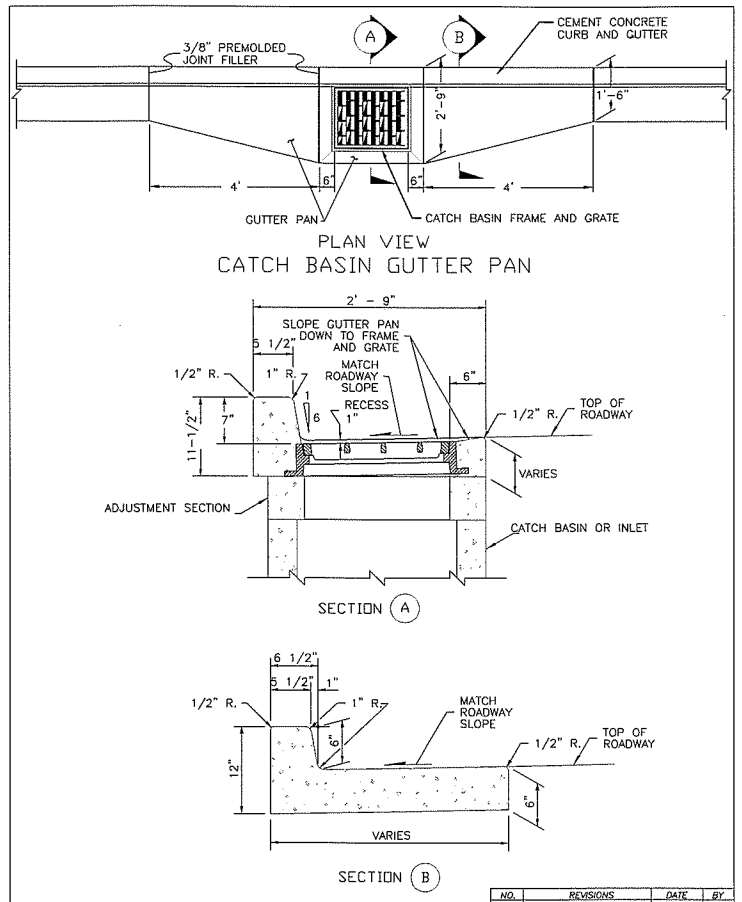

1 CATCH BASIN GUTTER PLAN – STD. DETAIL D4.1
SCALE: NTS

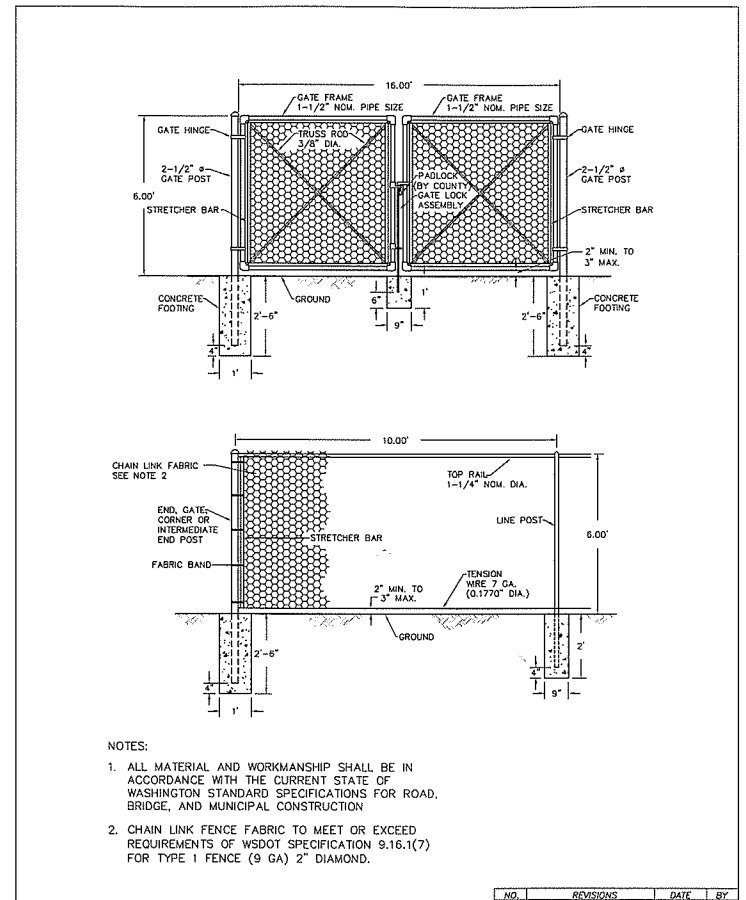

2 CHAIN LINK FENCE AND GATE
SCALE: NTS

90% PLANS - PRELIMINARY

DESIGNED	ASZ
DRAWN	ASZ
CRP	321222
HOR.	NA
VERT.	NA
DATE	11/04
DWG:	SD7
SHEET	47 OF 105

CALL 48 HOURS BEFORE YOU DIG
1-800-553-4344
"It's the Law"
NORTHWEST UTILITIES NOTIFICATION CENTER

DESIGN & ENGINEERING DIVISION
DESIGN SECTION

BETTS BRIDGE #26 REPLACEMENT (SALMON CREEK AVE.)
STORMWATER DETAILS – SHEET 3

proud past, promising future
CLARK COUNTY WASHINGTON

FEDERAL AID # BRM-4231(004)

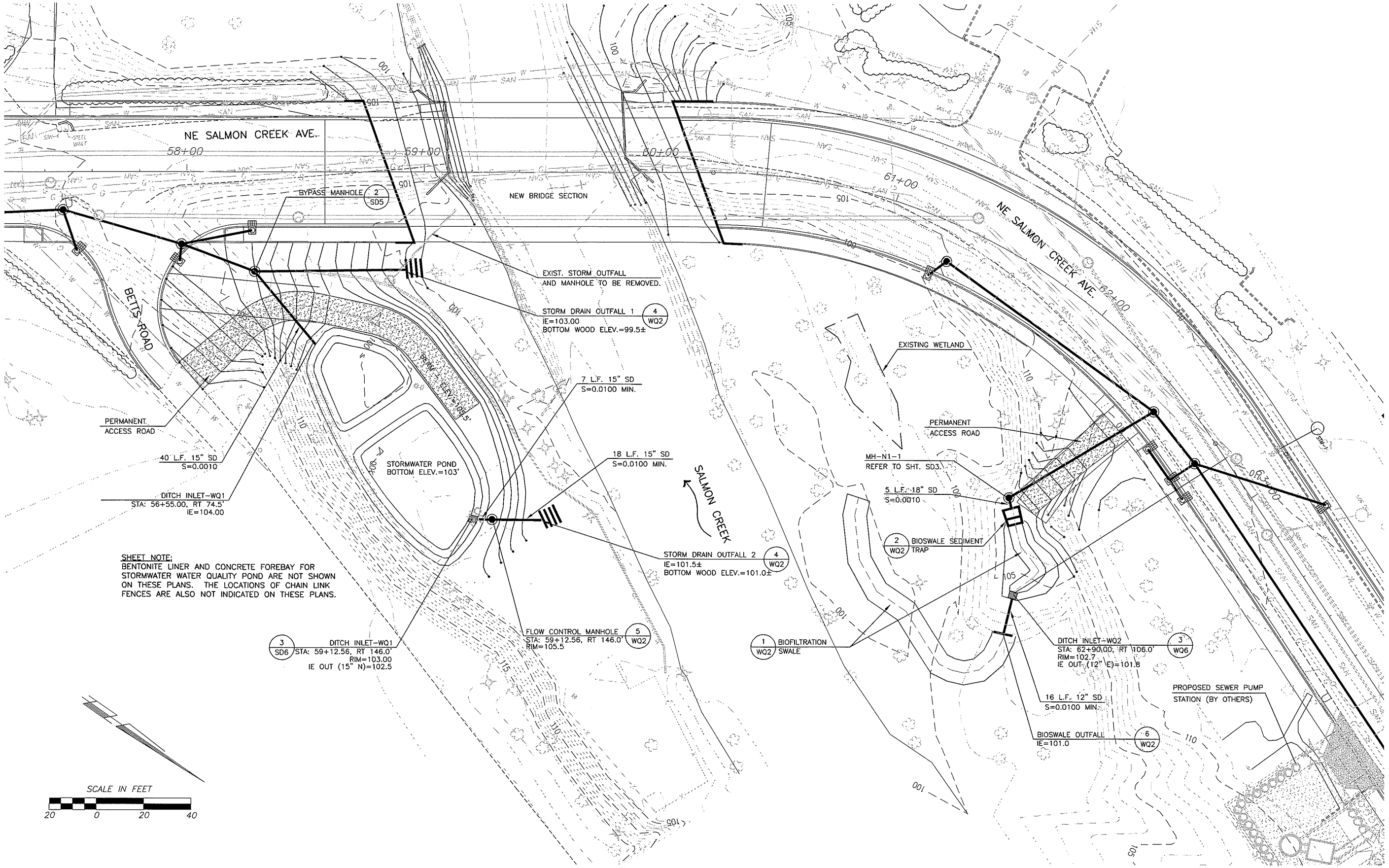

SHEET NOTE:
BENTONITE LINER AND CONCRETE FOREBAY FOR STORMWATER WATER QUALITY POND ARE NOT SHOWN ON THESE PLANS. THE LOCATIONS OF CHAIN LINK FENCES ARE ALSO NOT INDICATED ON THESE PLANS.

STORMWATER MANAGEMENT FACILITIES

SCALE: 1"=20' (FOR 22" X 34" SHEET)

90% PLANS - PRELIMINARY

DESIGNED	ASZ
DRAWN	ASZ
CRP	321222
HOR.	1"=20'
VERT.	NA
DATE	11/04
DWG:	WQ1
SHEET 49 OF 105	

CALL 48 HOURS BEFORE YOU DIG
1-800-553-4344
"It's the Law"
NORTHWEST UTILITIES NOTIFICATION CENTER

DESIGN & ENGINEERING DIVISION
DESIGN SECTION

BETTS BRIDGE #26 REPLACEMENT (SALMON CREEK AVE.)
WATER QUALITY & STORMWATER MANAGEMENT FACILITIES

proud past, promising future
CLARK COUNTY
WASHINGTON

FEDERAL AID # BRM-4231(004)

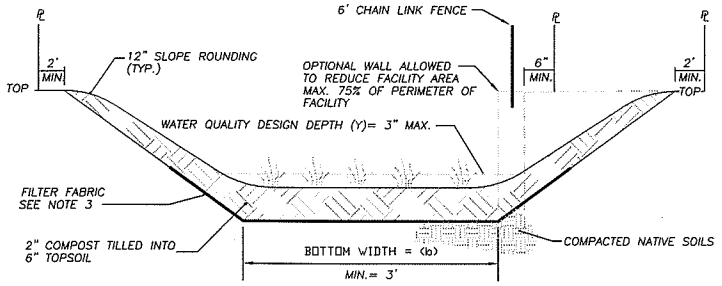

WET/TREATMENT AREA SEED MIX		
SCIENTIFIC NAME	COMMON NAME	*%
Festuca arundinacea	Tall Fescue	30
Elymus glaucus	Blue Wildrye	25
Festuca rubra	Native Red Fescue	10
Juncus tenuis	Slender Rush	10
Scirpus microcarpus	Small-fruited Bulrush	25

*% MIXTURE BY PURE LIVE SEED (PLS)
Hydroseed application rate: 4.5 lbs/Ac.
Broadcast application rate: 6 lbs/Ac.

DRY/UPPER SIDE SLOPE AREA SEED MIX		
SCIENTIFIC NAME	COMMON NAME	*%
Bromus carinatus	California Brome	20
Elymus glaucus	Blue Wildrye	20
Festuca rubra	Native Red Fescue	50
Lupinus polyphyllus	Large-leaf Lupine	10

*% MIXTURE BY PURE LIVE SEED (PLS)
Hydroseed application rate: 32 lbs/Ac.
Broadcast application rate: 40 lbs/Ac.

NOTE: IF BIOSWALE IS INSTALLED DURING A PERIOD OF WET WEATHER, IT CAN BE ESTABLISHED BY SODDING. SINCE SOD IS NOT AVAILABLE IN RECOMMENDED GRASSES, IT SHOULD BE OVER SOWN WITH A RECOMMENDED MIX AT THE BEGINNING OF THE GROWING SEASON. IT IS RECOMMENDED TO INSTALL A SOD THAT IS A MIX OF CREEPING FESCUE AND HARD & SHEEP FESCUES.

NOTES

1. THE DESIGN OF WATER QUALITY FACILITIES SHALL MEET THE STANDARD AS SET FORTH IN CCC13.29.
2. SOD SHALL BE LAID PERPENDICULAR TO SLOPE FROM BOTTOM TO TOP, WITH JOINTS STAGGERED.
3. FOR NATIVE SOILS WITH CLASSIFICATIONS A-1-a, A-1-b, A-3, A-2-4, AND A-2-5 AS DEFINED IN AASHTO SPEC. M145, INSTALL LINO TYPAR-3401 FILTER FABRIC OR EQUIVALENT WITH PERMEABILITY RATE OF 0.5 TO 2.4 INCHES/HOUR.
4. SWALE LONGITUDINAL SLOPE: 1%-4% MAX. UNDERDRAINS REQUIRED FOR SLOPES LESS THAN 1%, SEE STANDARD PLAN D11.3
5. SWALE SHALL HAVE A VIABLE STAND OF GRASS APPROVED BY THE COUNTY INSPECTOR PRIOR TO PAVING.

NO.	REVISIONS	DATE	BY

DWG: D11-2.DWG

Department of Public Works
CLARK COUNTY WASHINGTON
proud past, promising future

TYPICAL BIOSWALE SECTION
APPROVED
Peter Capen — COUNTY ENGINEER — 01/01/04 DATE
STANDARD D11.2
PLAN No.
DESIGNED SGH
DRAWN SGH
DATE 07/07/03

1 BIOSWALE SWALE
SCALE: NTS

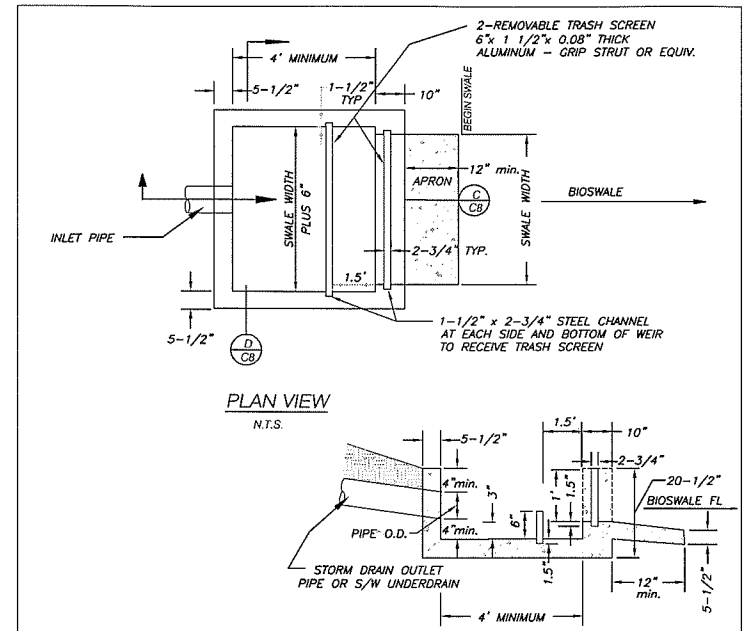

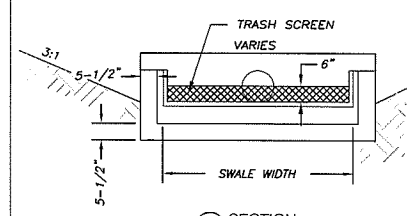

NOTE:
1. ALL CONCRETE SHALL BE 3000 PSI.
2. STRUCTURE CAN BE USED AS AN AFFECTIVE TEMPORARY EROSION CONTROL SEDIMENTATION TRAP DURING SITE GRADING.
3. TRASH SCREEN CAN BE LINED WITH FILTER FABRIC FOR SEDIMENT REMOVAL.
4. BIOSWALE SEDIMENTATION TRAP IS REQUIRED WITH ALL BIOSWALES, UNLESS OMISSION APPROVED BY REVIEWING AUTHORITY.

NO.	REVISIONS	DATE	BY

DWG: D11.5.DWG

Department of Public Works
CLARK COUNTY WASHINGTON
proud past, promising future

BIOSWALE SEDIMENTATION TRAP
APPROVED
Peter Capen — COUNTY ENGINEER — 01/01/04 DATE
STANDARD D11.5
PLAN No.
DESIGNED SGH
DRAWN SGH
DATE 07/07/03

2 BIOSWALE SEDIMENTATION TRAP
SCALE: NTS

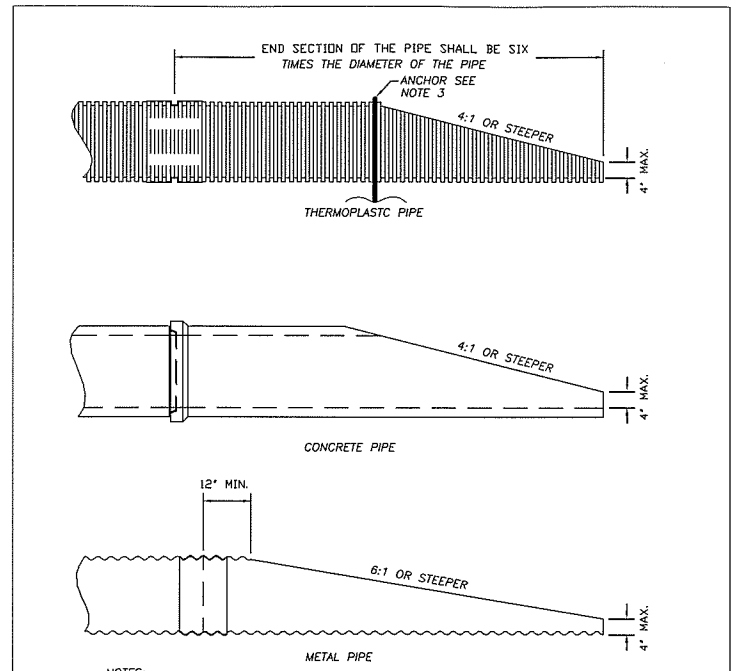

NOTES:
1. THE CULVERT ENDS SHALL BE BEVELED TO MATCH THE EMBANKMENT OR DITCH SLOPE, WITHOUT EXCEEDING THE LIMITS SHOWN ON THE PLAN.
2. FIELD CUT OF CULVERT ENDS IS PERMITTED, WHEN APPROVED BY THE ENGINEER. ALL FIELD CUT PIPE CULVERTS SHALL BE TREATED WITH TREATMENT SHOWN IN THE STANDARD SPECIFICATION OR GENERAL SPECIAL PROVISIONS.
3. THE END OF THERMOPLASTIC PIPE SHALL BE ANCHORED. SEE STD. PLAN D22
4. FOR PIPES 18" OR LARGER, TRASH SCREEN REQUIRED. SEE STD. PLAN D25

NO.	REVISIONS	DATE	BY

DWG: D24.DWG

Department of Public Works
CLARK COUNTY WASHINGTON
proud past, promising future

BEVELED END SECTION
APPROVED
Peter Capen — COUNTY ENGINEER — 01/01/04 DATE
STANDARD D24
PLAN No.
DESIGNED
DRAWN
DATE 10/04/02

2 BEVELED END SECTION
SCALE: NTS

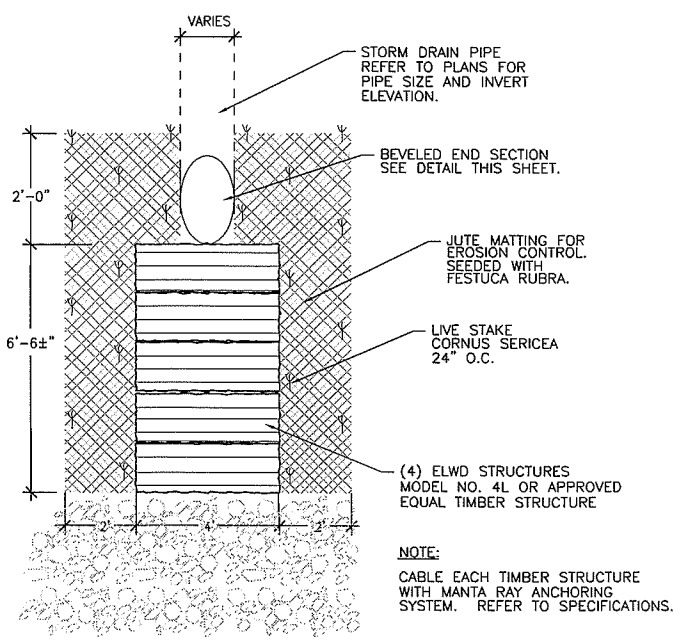

NOTE:
CABLE EACH TIMBER STRUCTURE WITH MANTA RAY ANCHORING SYSTEM. REFER TO SPECIFICATIONS.

4 STORM DRAIN OUTFALL
SCALE: NTS

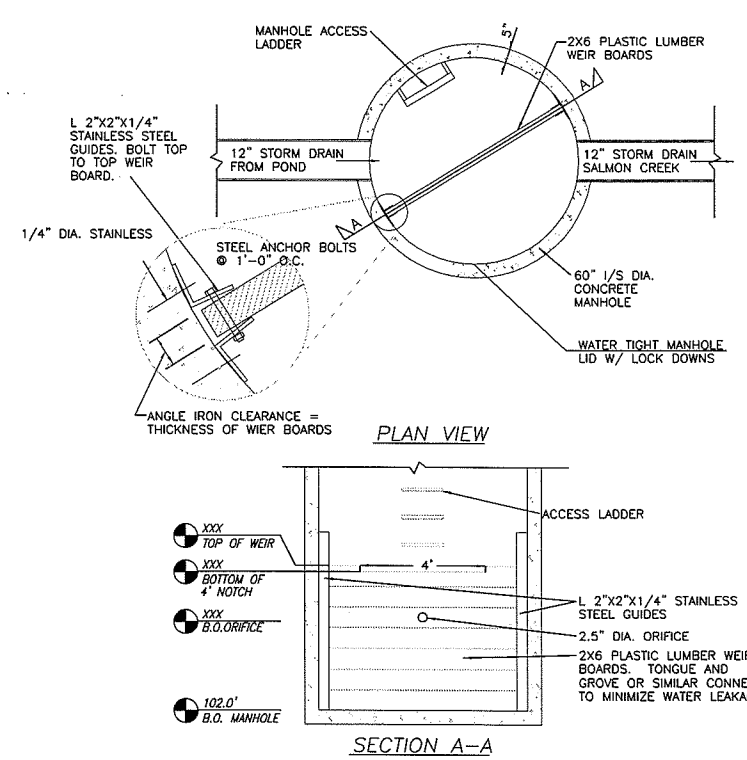

5 FLOW CONTROL MANHOLE
SCALE: NTS

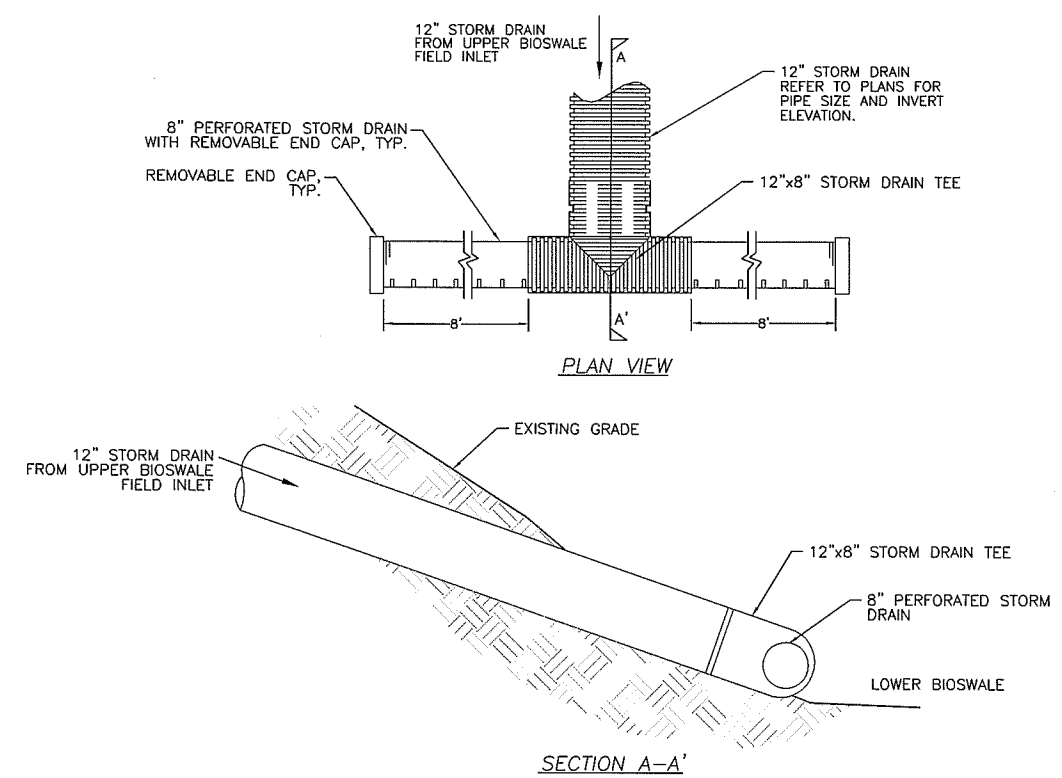

6 BIOSWALE OUTFALL
SCALE: NTS

FEDERAL AID # BRM-4231(004)

90% PLANS - PRELIMINARY

DESIGNED	ASZ
DRAWN	ASZ
CRP	321222
HOR.	NA
VERT.	NA
DATE	11/04
DWG:	WQ2
SHEET 49 OF 105	

CALL 48 HOURS BEFORE YOU DIG 1-800-553-4344 "It's the Law" NORTHWEST UTILITIES NOTIFICATION CENTER

DESIGN & ENGINEERING DIVISION
DESIGN SECTION

BETTS BRIDGE #26 REPLACEMENT (SALMON CREEK AVE.)
WATER QUALITY FACILITY DETAILS

proud past, promising future
CLARK COUNTY WASHINGTON

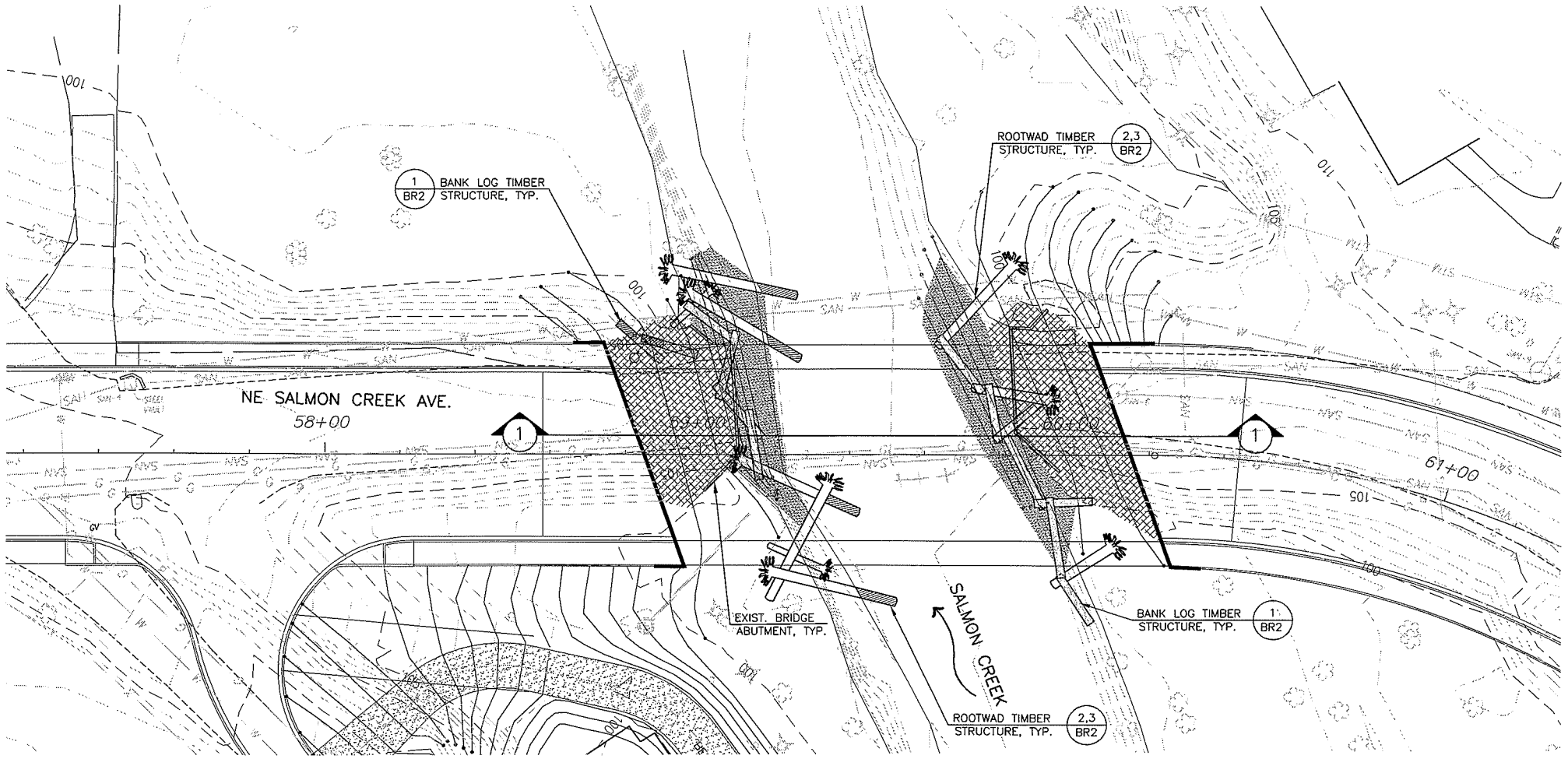

BANK RESTORATION & STABILIZATION PLAN
SCALE: 1"=20' (FOR 22" X 34" SHEET)

LEGEND

AREA OF ABUTMENT REMOVAL AND ROADWAY PRISM OVER-EXCAVATION. AREA TO BE FILLED WITH STREAMBED SOIL MIX.

AREA OF FISH COBBLE MIX

SCALE IN FEET
20 0 20 40

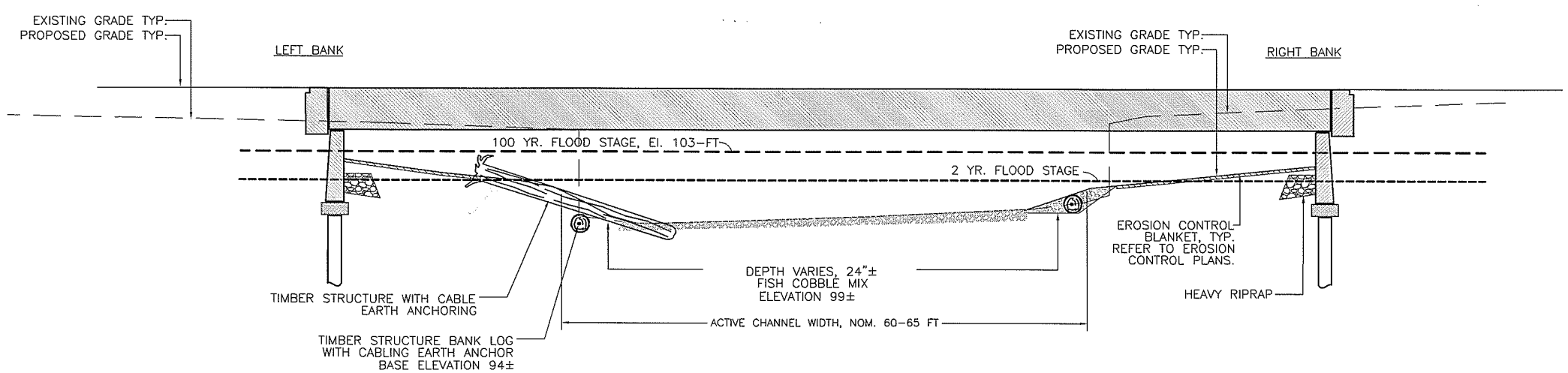

1 BANK STABILIZATION – SECTION AT BRIDGE
SCALE: 1"=10' (FOR 22" X 34" SHEET)

NOTES

1. SEE SPECIFICATIONS FOR FISH ROCK AND FISH COBBLE MIX GRADATIONS.
2. SEE SPECIFICATIONS FOR STREAMBANK SOIL MIX.
3. SEE EROSION CONTROL PLAN SHEETS EC1 AND EC2 FOR THE EXTENTS OF EROSION CONTROL BLANKET.

CONSTRUCTION SEQUENCE FOR BANK PROTECTION AND ENHANCEMENT

1. ISOLATE ACTIVE CONSTRUCTION AREA FROM SALMON CREEK AND ITS ASSOCIATED RIPARIAN AREA USING APPROVED METHODS. THE CONTRACTOR SHALL SUBMIT A DEWATERING AND ISOLATION PLAN FOR APPROVAL.

2. INSTALL TEMPORARY EROSION CONTROL MEASURES (SILT FENCES, STRAW WATTLES, ETC.) AS SHOWN ON CONSTRUCTION PLANS AND DETAILS, TO ISOLATE INDIVIDUAL WORK AREAS AS EXCAVATION PROGRESSES. REFER TO EC1-EC4 FOR MINIMUM EROSION CONTROL REQUIREMENTS

3. IF CRANE PAD IS TO BE CONSTRUCTED, INSTALL ADDITIONAL EROSION CONTROL MEASURES AS NECESSARY.

4. PLACE ROCK MATERIAL AT THE BRIDGE ABUTMENTS AS SHOWN IN COORDINATION WITH THE CONSTRUCTION OF THE ABUTMENTS.

5. CONSTRUCT NEW CHANNEL BANKS TO THE LINES AND GRADES SHOWN. ADD ENGINEERED WOODY DEBRIS STRUCTURES AND CLEAN ROCK/BOULDERS TO STREAM BANKS FOR ADDITIONAL PROTECTION AND HABITAT ENHANCEMENT, ACCORDING TO PLANS AND SPECIFICATIONS.

6. COMPACT THE CHANNEL BANK PER SPECIFICATIONS.

7. REFER TO PLANTING PLANS AND SPECIFICATIONS FOR DIRECTION ON SOIL CONDITIONER AND PLANTING.

8. REFER TO EROSION CONTROL PLANS AND SPECIFICATIONS FOR DIRECTION ON EROSION CONTROL MEASURES TO BE IMPLEMENTED AND/OR INSTALLED.

*SEE SHEETS XXX THROUGH XXX FOR DETAILED STAGING PLAN FOR BRIDGE CONSTRUCTION. UPON WRITTEN APPROVAL FROM THE PROJECT MANGER, THE CONTRACTOR MAY MODIFY THE CONSTRUCTION SEQUENCE ABOVE TO MEET SITE-SPECIFIC FIELD CONDITIONS AND NEEDS.

90% PLANS - PRELIMINARY

DESIGNED	ASZ
DRAWN	ASZ
CRP	321222
HOR.	1"=20'
VERT.	NA
DATE	11/04
DWG:	EN1
SHEET	50 OF 105

CALL 48 HOURS BEFORE YOU DIG
1-800-553-4344
"It's the Law"
NORTHWEST UTILITIES NOTIFICATION CENTER

DESIGN & ENGINEERING DIVISION
DESIGN SECTION

BETTS BRIDGE #26 REPLACEMENT (SALMON CREEK AVE.)
BANK RESTORATION & STABILIZATION PLAN

proud past, promising future
CLARK COUNTY WASHINGTON

FEDERAL AID # BRM-4231(004)

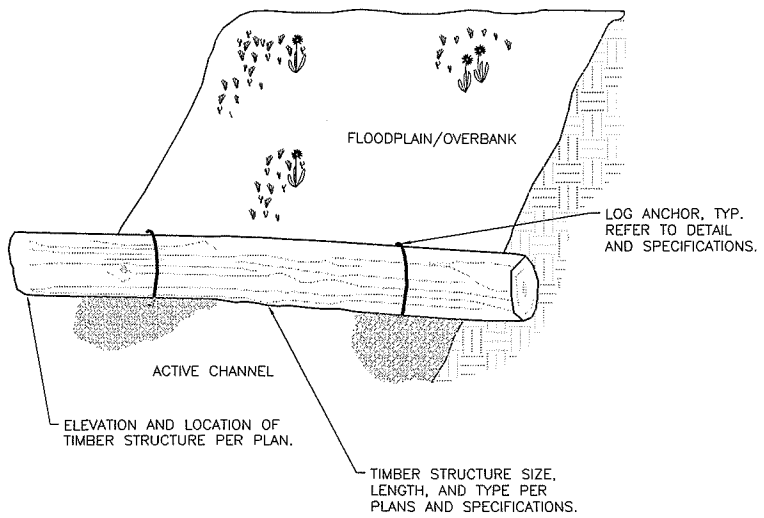

1 BANK LOG TIMBER STRUCTURE

SCALE: NTS

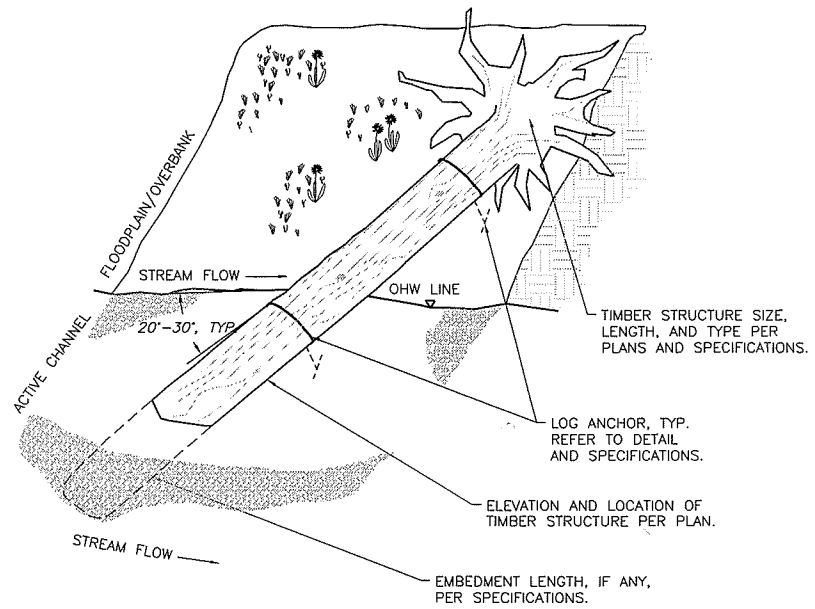

2 UPSTREAM ROOTWAD TIMBER STRUCTURE

SCALE: NTS

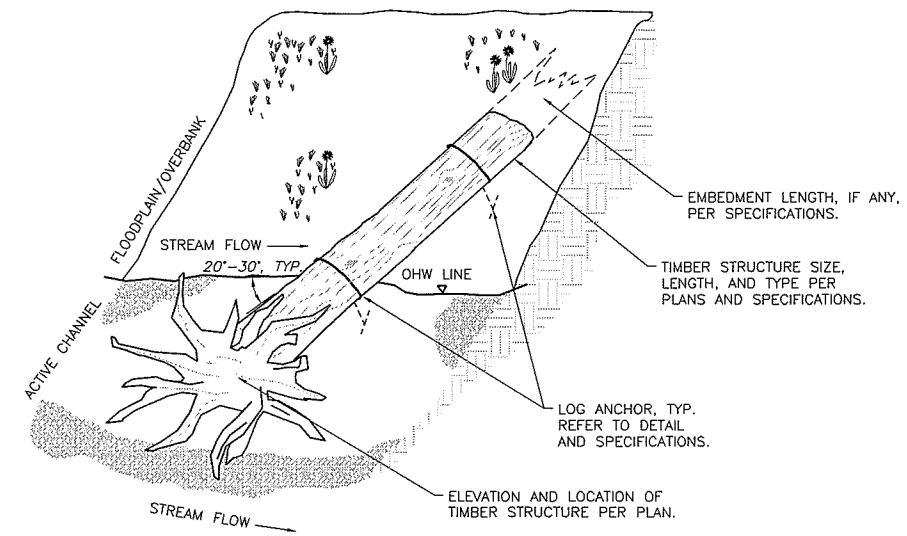

3 DOWNSTREAM ROOTWAD TIMBER STRUCTURE

SCALE: NTS

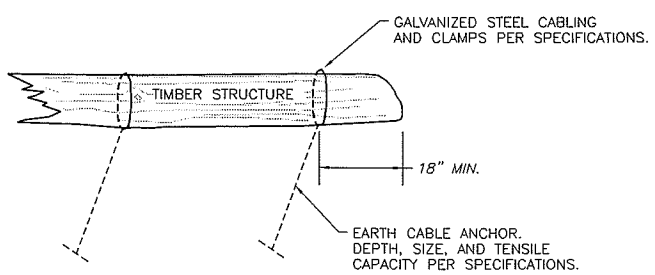

NOTES:

CABLE SHALL BE TIGHTLY WRAPPED AROUND TIMBER STRUCTURE. REFER TO THE SPECIFICATIONS FOR THE NUMBER OF CABLES AND ANCHORS PER TIMBER STRUCTURE.

SINGLE STRUCTRE CABLING

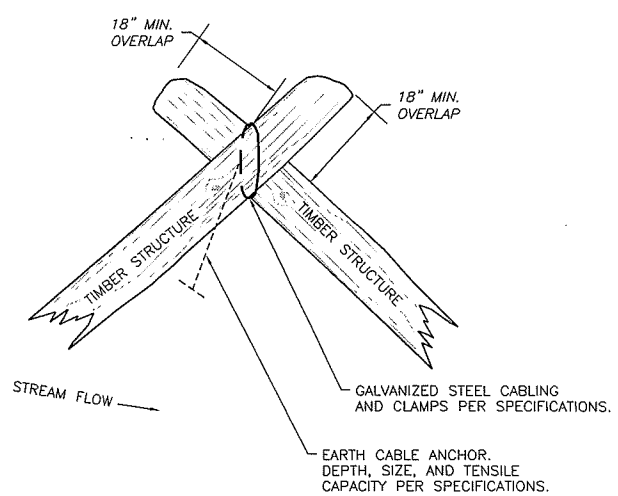

NOTES:

CABLE SHALL BE TIGHTLY WRAPPED AROUND TIMBER STRUCTURES PERPENDICULAR TO THE DIRECTION OF WATER FLOW, AS SHOWN.

CABLING MULTIPLE STRUCTURES TOGETHER

4 TYPICAL CABLE AND ANCHORING

SCALE: NTS

90% PLANS - PRELIMINARY

DESIGNED	ASZ
DRAWN	ASZ
CRP	321222
HOR.	NA
VERT.	NA
DATE	11/04
DWG:	BR2
SHEET	51 OF 105

CALL 48 HOURS BEFORE YOU DIG 1-800-553-4344 "It's the Law" NORTHWEST UTILITIES NOTIFICATION CENTER

DESIGN & ENGINEERING DIVISION
DESIGN SECTION

BETTS BRIDGE #26 REPLACEMENT (SALMON CREEK AVE.)
BANK RESTORATION AND STABILIZATION DETAILS

proud past, promising future

CLARK COUNTY
WASHINGTON

FEDERAL AID # BRM-4231(004)

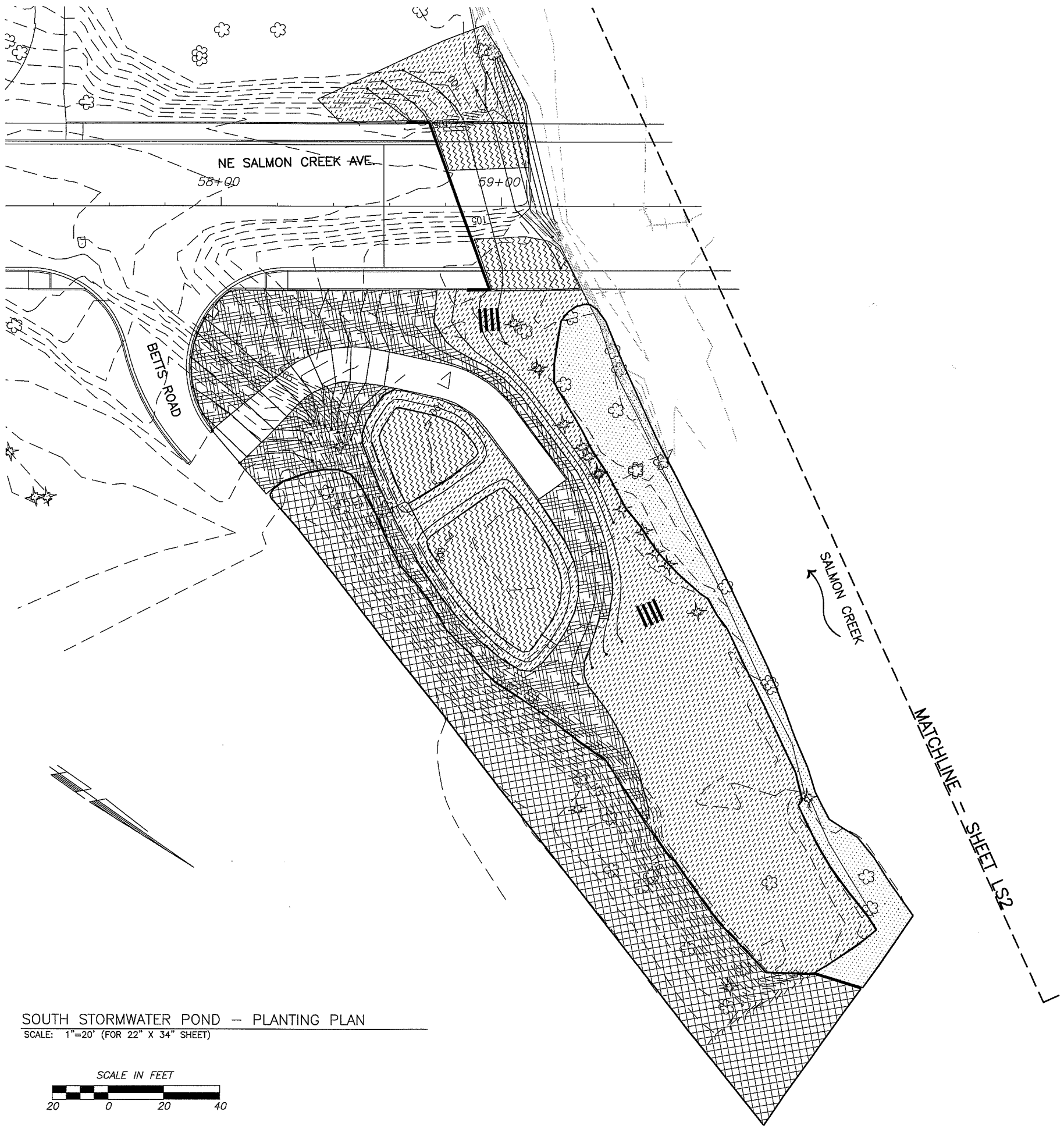

SOUTH STORMWATER POND – PLANTING PLAN

SCALE: 1"=20' (FOR 22" X 34" SHEET)

SCALE IN FEET

20 0 20 40

PLANT LEGEND – LS1–SOUTH

UPLAND – 6,150 S.F. (.14 ACRES)

ABBR.	QTY.	SYMBOL	BOTANICAL /COMMON NAME	SIZE	CONDITION
ACMA	18		Acer macrophyllum / big–leaf maple	5 GAL.	CONTAINER
PSME	11		Pseudotsuga menziesii / Douglas fir	5 GAL.	CONTAINER
THPL	6		Thuja plicata / Western red cedar	5 GAL.	CONTAINER
ACCI	14		Acer circinatum / vine maple	3 GAL.	CONTAINER
COCO	7		Corylus cornuta / beaked hazelnut	3 GAL.	CONTAINER
MAAQ	21		Mahonia aquifolium / Oregon grape	1 GAL.	CONTAINER
POMU	35		Polystichum munitum / sword fern	1 GAL.	CONTAINER
SARA	9		Sambucus racemosa / red elderberry	2 GAL.	CONTAINER
SYAL	28		Symphoricarpos albus / snowberry	2 GAL.	CONTAINER

SEED MIX

ABBR.	BOTANICAL /COMMON NAME	
BRCA	Bromus carinatus / California brome	See specifications for details on seed mix.
ELGL	Elymus glaucus / blue wild rye	
FERU	Festuca rubra rubra / red fescue	

RIPARIAN – 13,000 S.F. (.3 ACRES)

ABBR.	QTY.	SYMBOL	BOTANICAL /COMMON NAME	SIZE	CONDITION
ALRU	10		Alnus rubra / red alder	5 GAL.	CONTAINER
FRLA	42		Fraxinus latifolia / Oregon ash	5 GAL.	CONTAINER
RHPU	18		Rhamnus purshiana / cascara	3 GAL.	CONTAINER
COSE	80		Cornus sericea / red–osier dogwood	2 GAL.	CONTAINER
LOIN	32		Lonicera involucrata / black twinberry	2 GAL.	CONTAINER
PHCA	54		Physocarpus capitata / ninebark	2 GAL.	CONTAINER
ROGY	48		Rosa gymnocarpa / baldhip rose	2 GAL.	CONTAINER
SASC	16		Salix scouleriana / Scouler's willow	2 GAL.	CONTAINER

SEED MIX

ABBR.	BOTANICAL /COMMON NAME	
CADEW	Carex deweyana / Dewey sedge	See specifications for details on seed mix.
FERU	Festuca rubra rubra / red fescue	
HOBR	Hordeum brachyantherum / meadow barley	
JUPA	Juncus patens / spreading rush	

EMERGENT WETLAND – 3,486 S.F. (0.08 ACRES)

ABBR.	SYMBOL	BOTANICAL /COMMON NAME	
CAOB		Carex obnupta / slough sedge	See specifications for details on seed mix.
FERU		Festuca rubra rubra / red fescue	
GLOC		Glyceria occidentalis / western mannagrass	
SCMI		Scirpus microcarpus / small–fruited bulrush	
JUTE		Juncus tenuis / slender rush	

ENHANCEMENT AREA NOTES:

1. UPLAND AND RIPARIAN ENHANCEMENT AREAS SHALL REMAIN PRIMARILY UNDISTURBED. ACCEPTABLE CONSTRUCTION ACTIVITIES WITHIN ENHANCEMENT AREAS INCLUDE:
   A. INVASIVE AND NOXIOUS WEED MANAGEMENT
   B. NATIVE PLANTING
   C. LARGE WOODY DEBRIS PLACEMENT

2. CONTRACTOR SHALL PHYSICALLY REMOVE ENGLISH IVY, HIMALAYAN BLACKBERRY AND OTHER NOXIOUS OR INVASIVE WEEDS THAT ARE EXISTING ON SITE OR DEVELOP DURING WARRANTY PERIOD. HERBICIDE USE AND CHEMICAL ERADICATION SHALL ONLY BE PERFORMED BY CLARK COUNTY. CONTRACTOR SHALL COORDINATE WITH CLARK COUNTY WEED MANAGEMENT IF NECESSARY.

3. ENHANCEMENT AREAS SHALL RECEIVE SUPPLEMENTAL NATIVE PLANTINGS. SEE BELOW FOR PLANT LIST AND QUANTITIES. QUANTITIES SHOWN SHALL BE FIELD LOCATED PER OWNER'S REPRESENTATIVE. CONTRACTOR SHALL COORDINATE MEETING FOR FIELD PLACEMENT WITH OWNER'S REPRESENTATIVE A MINIMUM OF TWO WORKING DAYS IN ADVANCE.

4. TREES REMOVED DURING CONSTRUCTION ACTIVITIES SHALL BE SALVAGED AND STOCKPILED FOR RE–USE AS LARGE WOODY DEBRIS. LARGE WOODY DEBRIS SHALL BE PLACED IN RIPARIAN ENHANCEMENT AREAS AS DIRECTED BY OWNER'S REPRESENTATIVE.

PLANT LEGEND – SOUTH ENHANCEMENT

UPLAND – 8,500 S.F. (.20 ACRES)

ABBR.	QTY.	SYMBOL	BOTANICAL /COMMON NAME	SIZE	CONDITION
ACMA	7		Acer macrophyllum / big–leaf maple	5 GAL.	CONTAINER
PSME	4		Pseudotsuga menziesii / Douglas fir	5 GAL.	CONTAINER
COCO	5		Corylus cornuta / beaked hazelnut	3 GAL.	CONTAINER
MAAQ	8		Mahonia aquifolium / Oregon grape	1 GAL.	CONTAINER
POMU	12		Polystichum munitum / sword fern	1 GAL.	CONTAINER
SARA	5		Sambucus racemosa / red elderberry	2 GAL.	CONTAINER
SYAL	10		Symphoricarpos albus / snowberry	2 GAL.	CONTAINER

RIPARIAN – 3,750 S.F. (.09 ACRES)

ABBR.	QTY.	SYMBOL	BOTANICAL /COMMON NAME	SIZE	CONDITION
FRLA	3		Fraxinus latifolia / Oregon ash	5 GAL.	CONTAINER
RHPU	1		Rhamnus purshiana / cascara	3 GAL.	CONTAINER
COSE	7		Cornus sericea / red–osier dogwood	2 GAL.	CONTAINER
LOIN	3		Lonicera involucrata / black twinberry	2 GAL.	CONTAINER
PHCA	5		Physocarpus capitata / ninebark	2 GAL.	CONTAINER
ROGY	3		Rosa gymnocarpa / baldhip rose	2 GAL.	CONTAINER

FEDERAL AID # BRM-4231(004)

90% PLANS - PRELIMINARY

DESIGNED	TLJ
DRAWN	TLJ
CRP	321222
HOR.	1"=20'
VERT.	NA
DATE	11/04
DWG:	LS1
SHEET	S2 OF 105

CALL 48 HOURS BEFORE YOU DIG 1–800–553–4344 "It's the Law" NORTHWEST UTILITIES NOTIFICATION CENTER

DESIGN & ENGINEERING DIVISION
DESIGN SECTION

BETTS BRIDGE #26 REPLACEMENT (SALMON CREEK AVE.)
SOUTH STORMWATER POND – PLANTING PLAN

proud past, promising future

CLARK COUNTY WASHINGTON

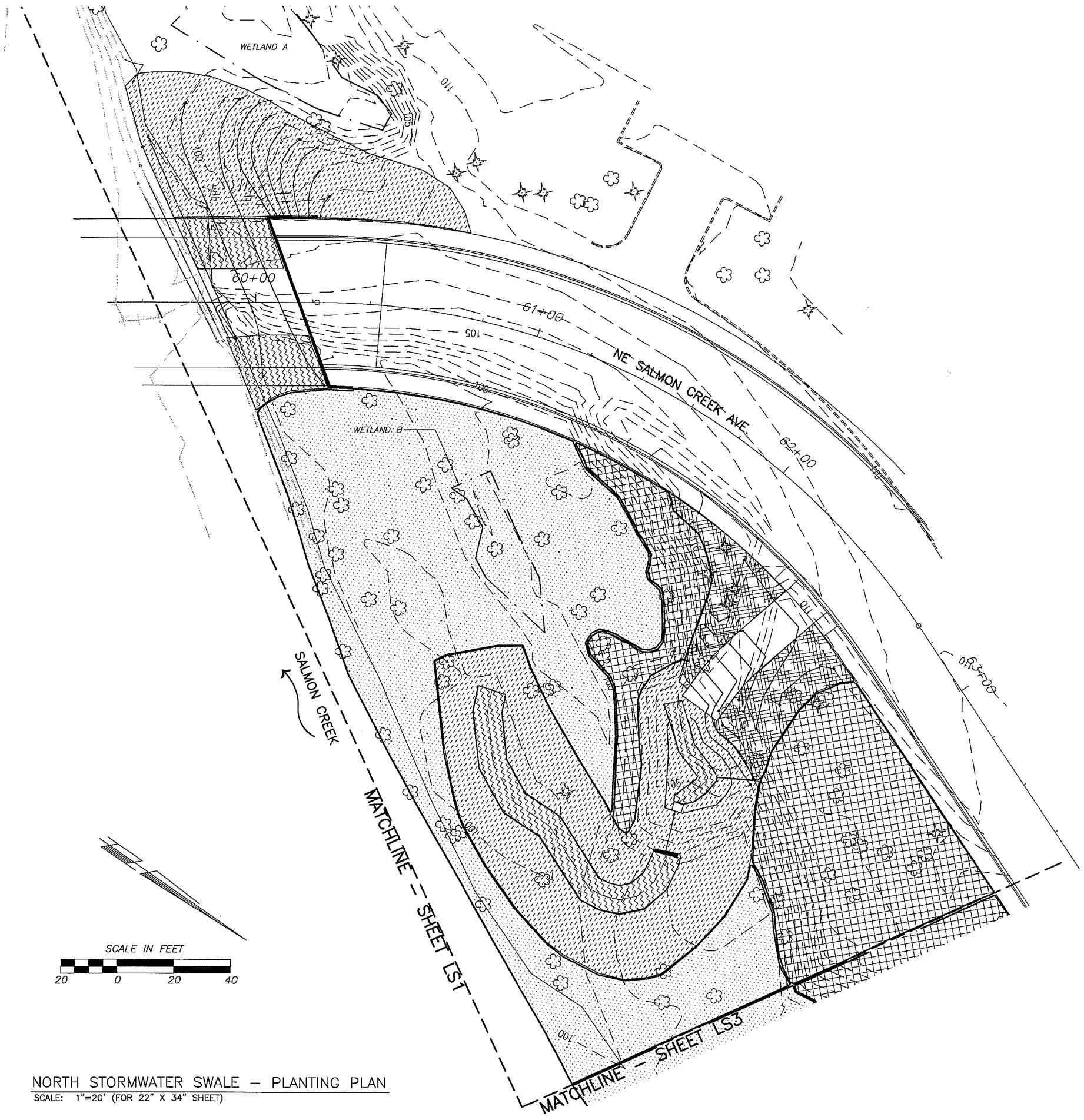

NORTH STORMWATER SWALE – PLANTING PLAN

SCALE: 1"=20' (FOR 22" X 34" SHEET)

PLANT LEGEND – LS2–NORTH

UPLAND – 2,000 S.F. (.05 ACRES)

ABBR.	QTY.	SYMBOL	BOTANICAL /COMMON NAME	SIZE	CONDITION
ACMA	6		Acer macrophyllum / big–leaf maple	5 GAL.	CONTAINER
PSME	2		Pseudotsuga menziesii / Douglas fir	5 GAL.	CONTAINER
THPL	4		Thuja plicata / Western red cedar	5 GAL.	CONTAINER
ACCI	7		Acer circinatum / vine maple	3 GAL.	CONTAINER
COCO	3		Corylus cornuta / beaked hazelnut	3 GAL.	CONTAINER
MAAQ	5		Mahonia aquifolium / Oregon grape	1 GAL.	CONTAINER
POMU	12		Polystichum munitum / sword fern	1 GAL.	CONTAINER
SARA	3		Sambucus racemosa / red elderberry	2 GAL.	CONTAINER
SYAL	11		Symphoricarpos albus / snowberry	2 GAL.	CONTAINER
SEED MIX					
ABBR.			BOTANICAL /COMMON NAME		
BRCA			Bromus carinatus / California brome	See specifications for details on seed mix.	
FERU			Festuca rubra rubra / red fescue		
ELGL			Elymus glaucus / blue wild rye		
DIFO			Dicentra formosa / western bleeding heart		

RIPARIAN – 10,600 S.F. (.24 ACRES)

ABBR.	QTY.	SYMBOL	BOTANICAL /COMMON NAME	SIZE	CONDITION
ALRU	17		Alnus rubra / red alder	5 GAL.	CONTAINER
POTR	29		Populus trichocarpa / black cottonwood	5 GAL.	CONTAINER
RHPU	11		Rhamnus purshiana / cascara	3 GAL.	CONTAINER
COSE	67		Cornus sericea / red–osier dogwood	2 GAL.	CONTAINER
LOIN	51		Lonicera involucrata / black twinberry	2 GAL.	CONTAINER
PHCA	43		Physocarpus capitata / ninebark	2 GAL.	CONTAINER
SASC	27		Salix scouleriana / Scouler's willow	2 GAL.	CONTAINER
SEED MIX					
ABBR.			BOTANICAL /COMMON NAME		
CADEW			Carex deweyana / Dewey sedge	See specifications for details on seed mix.	
GLOC			Glyceria occidentalis / western mannagrass		
FERU			Festuca rubra rubra / red fescue		
JUPA			Juncus patens / Spreading rush		

EMERGENT WETLAND SEED MIX – 2,600 S.F. (0.06 ACRES)

ABBR.	SYMBOL	BOTANICAL /COMMON NAME	
HOBR		Hordeum brachyantherum / meadow barley	See specifications for details on seed mix.
GLOC		Glyceria occidentalis / western mannagrass	
FERU		Festuca rubra rubra / red fescue	
SCMI		Scirpus microcarpus / small–fruited bulrush	
JUPA		Juncus patens / spreading rush	

ENHANCEMENT AREA NOTES:

1. UPLAND AND RIPARIAN ENHANCEMENT AREAS SHALL REMAIN PRIMARILY UNDISTURBED. ACCEPTABLE CONSTRUCTION ACTIVITIES WITHIN ENHANCEMENT AREAS INCLUDE:
   A. INVASIVE AND NOXIOUS WEED MANAGEMENT
   B. NATIVE PLANTING
   C. LARGE WOODY DEBRIS PLACEMENT

2. CONTRACTOR SHALL PHYSICALLY REMOVE ENGLISH IVY, HIMALAYAN BLACKBERRY AND OTHER NOXIOUS OR INVASIVE WEEDS THAT ARE EXISTING ON SITE OR DEVELOP DURING WARRANTY PERIOD. HERBICIDE USE AND CHEMICAL ERADICATION SHALL ONLY BE PERFORMED BY CLARK COUNTY. CONTRACTOR SHALL COORDINATE WITH CLARK COUNTY WEED MANAGEMENT IF NECESSARY.

3. ENHANCEMENT AREAS SHALL RECEIVE SUPPLEMENTAL NATIVE PLANTINGS. SEE BELOW FOR PLANT LIST AND QUANTITIES. QUANTITIES SHOWN SHALL BE FIELD LOCATED PER OWNER'S REPRESENTATIVE. CONTRACTOR SHALL COORDINATE MEETING FOR FIELD PLACEMENT WITH OWNER'S REPRESENTATIVE A MINIMUM OF TWO WORKING DAYS IN ADVANCE.

4. TREES REMOVED DURING CONSTRUCTION ACTIVITIES SHALL BE SALVAGED AND STOCKPILED FOR RE–USE AS LARGE WOODY DEBRIS. LARGE WOODY DEBRIS SHALL BE PLACED IN RIPARIAN ENHANCEMENT AREAS AS DIRECTED BY OWNER'S REPRESENTATIVE.

PLANT LEGEND – NORTH ENHANCEMENT

UPLAND – 7,300 S.F. (.17 ACRES)

ABBR.	QTY.	SYMBOL	BOTANICAL /COMMON NAME	SIZE	CONDITION
ACMA	5		Acer macrophyllum / big–leaf maple	5 GAL.	CONTAINER
PSME	2		Pseudotsuga menziesii / Douglas fir	5 GAL.	CONTAINER
COCO	3		Corylus cornuta / beaked hazelnut	3 GAL.	CONTAINER
MAAQ	6		Mahonia aquifolium / Oregon grape	1 GAL.	CONTAINER
POMU	11		Polystichum munitum / sword fern	1 GAL.	CONTAINER
SARA	5		Sambucus racemosa / red elderberry	2 GAL.	CONTAINER
SYAL	11		Symphoricarpos albus / snowberry	2 GAL.	CONTAINER

RIPARIAN – 15,800 S.F. (.36 ACRES)

ABBR.	QTY.	SYMBOL	BOTANICAL /COMMON NAME	SIZE	CONDITION
POTR	11		Populus trichocarpa / black cottonwood	5 GAL.	CONTAINER
RHPU	4		Rhamnus purshiana / cascara	3 GAL.	CONTAINER
COSE	30		Cornus sericea / red–osier dogwood	2 GAL.	CONTAINER
LOIN	20		Lonicera involucrata / black twinberry	2 GAL.	CONTAINER
PHCA	15		Physocarpus capitata / ninebark	2 GAL.	CONTAINER
SASC	10		Salix scouleriana / Scouler's willow	2 GAL.	CONTAINER

FEDERAL AID # BRM-4231(004)

90% PLANS - PRELIMINARY

DESIGNED	TLJ
DRAWN	TLJ
CRP	321222
HOR.	1"=20'
VERT.	NA
DATE	11/04
DWG:	LS2
SHEET	53 OF 105

CALL 48 HOURS BEFORE YOU DIG 1–800–553–4344 "It's the Law" NORTHWEST UTILITIES NOTIFICATION CENTER

DESIGN & ENGINEERING DIVISION
DESIGN SECTION

BETTS BRIDGE #26 REPLACEMENT (SALMON CREEK AVE.)
NORTH STORMWATER SWALE – PLANTING PLAN

proud past, promising future
CLARK COUNTY WASHINGTON

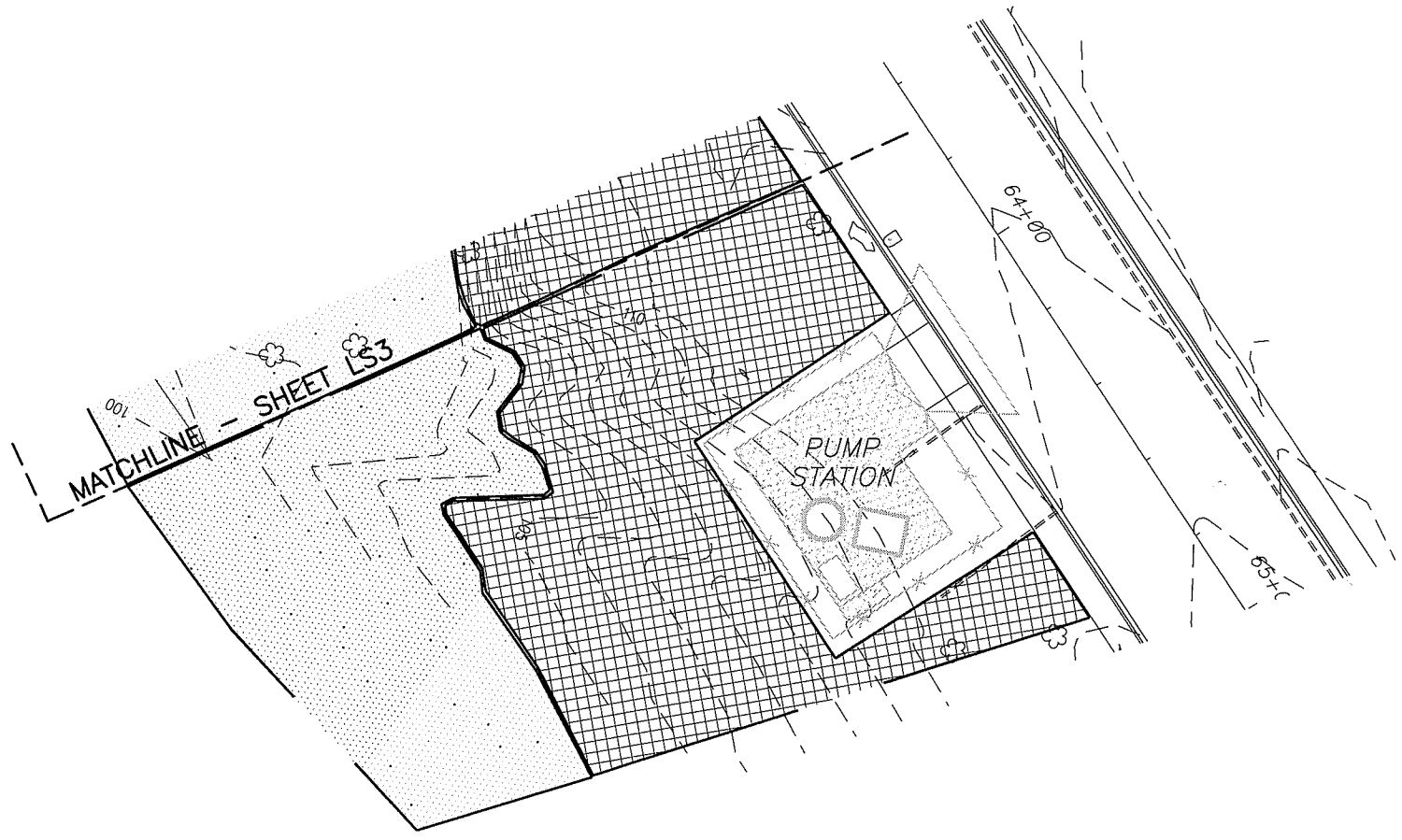

PUMP STATION ENHANCEMENT – PLANTING PLAN

SCALE: 1"=20' (FOR 22" X 34" SHEET)

SCALE IN FEET

20 0 20 40

PLANT LEGEND – PUMP STATION ENHANCEMENT

UPLAND – 7,800 S.F. (.18 ACRES)

ABBR.	QTY.	SYMBOL	BOTANICAL /COMMON NAME	SIZE	CONDITION
ACMA	5		Acer macrophyllum / big-leaf maple	5 GAL.	CONTAINER
PSME	2		Pseudotsuga menziesii / Douglas fir	5 GAL.	CONTAINER
COCO	4		Corylus cornuta / beaked hazelnut	3 GAL.	CONTAINER
MAAQ	7		Mahonia aquifolium / Oregon grape	1 GAL.	CONTAINER
POMU	11		Polystichum munitum / sword fern	1 GAL.	CONTAINER
SARA	5		Sambucus racemosa / red elderberry	2 GAL.	CONTAINER
SYAL	11		Symphoricarpos albus / snowberry	2 GAL.	CONTAINER

SEED MIX

ABBR.	BOTANICAL /COMMON NAME	
BRCA	Bromus carinatus / California brome	See specifications for details on seed mix.
DIFO	Dicentra formosa / western bleeding heart	
ELGL	Elymus glaucus / blue wild rye	
FERU	Festuca rubra rubra / red fescue	

RIPARIAN – 5,900 S.F. (.14 ACRES)

ABBR.	QTY.	SYMBOL	BOTANICAL /COMMON NAME	SIZE	CONDITION
POTR	5		Populus trichocarpa / black cottonwood	5 GAL.	CONTAINER
RHPU	3		Rhamnus purshiana / cascara	3 GAL.	CONTAINER
COSE	12		Cornus sericea / red-osier dogwood	2 GAL.	CONTAINER
LOIN	7		Lonicera involucrata / black twinberry	2 GAL.	CONTAINER
PHCA	9		Physocarpus capitata / ninebark	2 GAL.	CONTAINER

SEED MIX

ABBR.	BOTANICAL /COMMON NAME	
CADEW	Carex deweyana / Dewey sedge	See specifications for details on seed mix.
FERU	Festuca rubra rubra / red fescue	
GLOC	Glyceria occidentalis / western mannagrass	
JUPA	Juncus patens / spreading rush	

ENHANCEMENT AREA NOTES:

1. UPLAND AND RIPARIAN ENHANCEMENT AREAS SHALL REMAIN PRIMARILY UNDISTURBED. ACCEPTABLE CONSTRUCTION ACTIVITIES WITHIN ENHANCEMENT AREAS INCLUDE:
   A. INVASIVE AND NOXIOUS WEED MANAGEMENT
   B. NATIVE PLANTING
   C. LARGE WOODY DEBRIS PLACEMENT

2. CONTRACTOR SHALL PHYSICALLY REMOVE ENGLISH IVY, HIMALAYAN BLACKBERRY AND OTHER NOXIOUS OR INVASIVE WEEDS THAT ARE EXISTING ON SITE OR DEVELOP DURING WARRANTY PERIOD. HERBICIDE USE AND CHEMICAL ERADICATION SHALL ONLY BE PERFORMED BY CLARK COUNTY. CONTRACTOR SHALL COORDINATE WITH CLARK COUNTY WEED MANAGEMENT IF NECESSARY.

3. ENHANCEMENT AREAS SHALL RECEIVE SUPPLEMENTAL NATIVE PLANTINGS. SEE BELOW FOR PLANT LIST AND QUANTITIES. QUANTITIES SHOWN SHALL BE FIELD LOCATED PER OWNER'S REPRESENTATIVE. CONTRACTOR SHALL COORDINATE MEETING FOR FIELD PLACEMENT WITH OWNER'S REPRESENTATIVE A MINIMUM OF TWO WORKING DAYS IN ADVANCE.

4. TREES REMOVED DURING CONSTRUCTION ACTIVITIES SHALL BE SALVAGED AND STOCKPILED FOR RE-USE AS LARGE WOODY DEBRIS. LARGE WOODY DEBRIS SHALL BE PLACED IN RIPARIAN ENHANCEMENT AREAS AS DIRECTED BY OWNER'S REPRESENTATIVE.

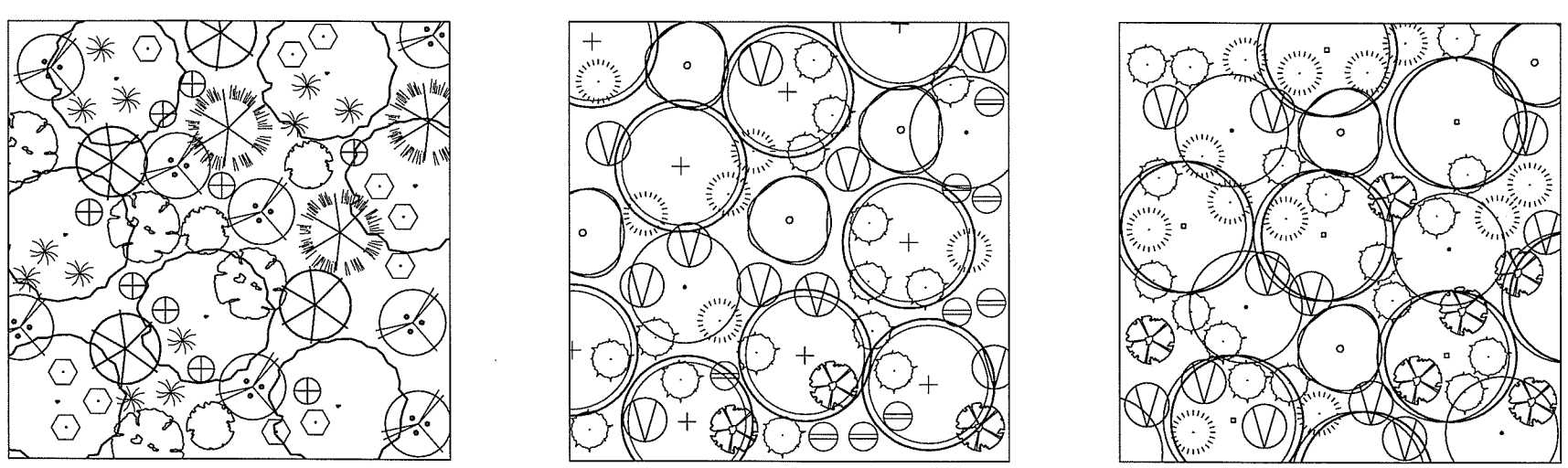

UPLAND RIPARIAN – SOUTH RIPARIAN – NORTH

PLANT COMMUNITIES – 50' X 50' SAMPLE PLOTS

SCALE: 1"=10' (FOR 22" X 34" SHEET)

SCALE IN FEET

10 0 10 20

PLANT SYMBOL LEGEND

SYMBOL	BOTANICAL /COMMON NAME
	Acer macrophyllum / big-leaf maple
	Alnus rubra / Red alder
	Fraxinus latifolia / Oregon ash
	Pseudotsuga menziesii / Douglas fir
	Thuja plicata / western red cedar
	Rhamnus purshiana / cascara
	Acer circinatum / vine maple
	Cornus sericea / red-osier dogwood
	Corylus cornuta / beaked hazelnut
	Lonicera involucrata / black twinberry
	Mahonia aquifolium / Oregon grape
	Physocarpus capitata / Ninebark
	Polystichum munitum / western sword fern
	Rosa gymnocarpa / Baldhip rose
	Sambucus racemosa / red elderberry
	Symphoricarpos albus / snowberry

FEDERAL AID # BRM-4231(004)

90% PLANS - PRELIMINARY

DESIGNED	TLJ
DRAWN	TLJ
CRP	321222
HOR.	1"=20'
VERT.	NA
DATE	11/04
DWG:	LS3
SHEET	54 OF 105

CALL 48 HOURS BEFORE YOU DIG 1-800-553-4344 "It's the Law" NORTHWEST UTILITIES NOTIFICATION CENTER

DESIGN & ENGINEERING DIVISION
DESIGN SECTION

BETTS BRIDGE #26 REPLACEMENT (SALMON CREEK AVE.)
NORTH PUMP STATION – PLANTING PLAN

proud past, promising future
CLARK COUNTY WASHINGTON

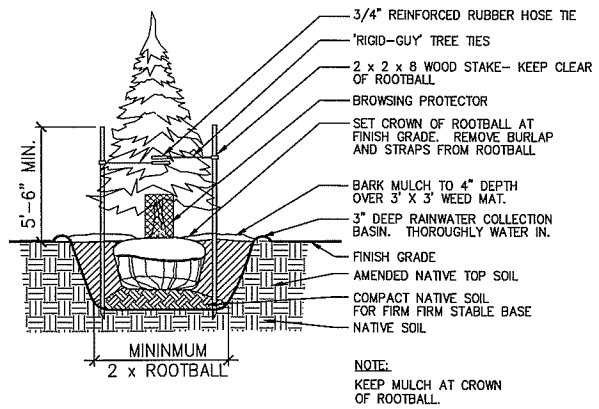

1 EVERGREEN TREE PLANTING
SCALE: NTS

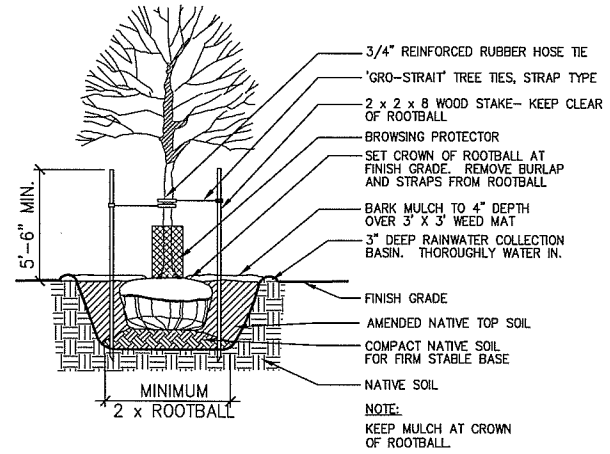

3 DECIDUOUS TREE PLANTING
SCALE: NTS

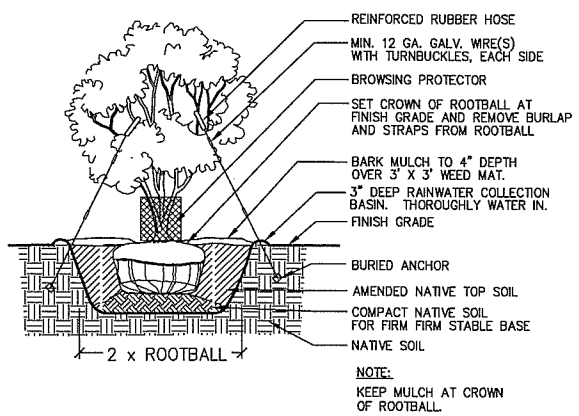

2 MULTI-STEM TREE PLANTING
SCALE: NTS

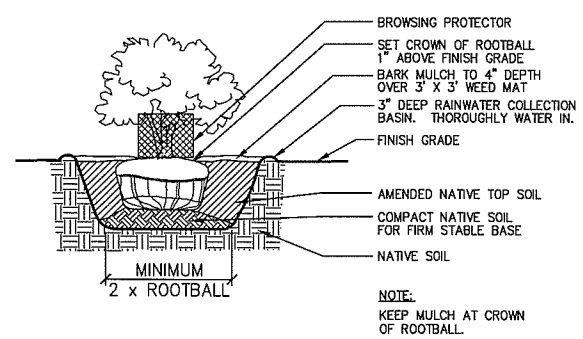

4 CONTAINER SHRUB PLANTING
SCALE: NTS

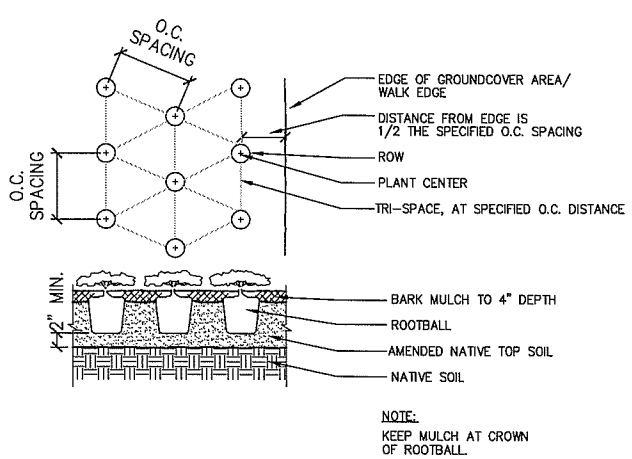

5 GROUNDCOVER PLANTING
SCALE: NTS

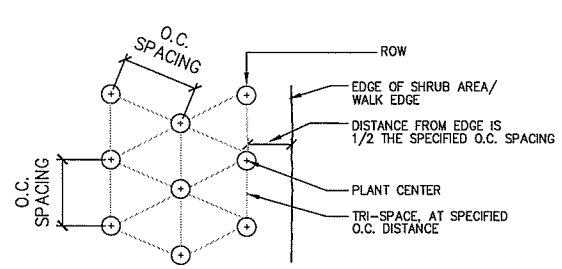

6 TYP. SHRUB SPACING
SCALE: NTS

NORTH STORMWATER SWALE – PLANTING DETAILS

MITIGATION PLANTING NOTES:

1. DIG A HOLE TWICE THE DIMENSION OF THE PLANT CONTAINER TO BE INSTALLED.

2. IF SOIL LACKS SUFFICIENT ORGANIC MATTER, ADD AN EQUAL PORTION OF COMPOST TO THE EXCAVATED NATIVE SOIL AND MIX THOROUGHLY UNTIL UNIFORM CONSISTENCY, BREAKING UP CHUNKS OF SOIL, REMOVING LARGE ROCKS AND INORGANIC DEBRIS.

3. IF SOIL IS DRY, ADD WATER TO HOLE TO THOROUGHLY WET SOIL PRIOR TO PLANTING.

4. REMOVE PLANT FROM CONTAINER WITH CARE TO PREVENT TEARING OR BREAKING ROOTS WITH WEIGHT OF SOIL. IF PLANT IS ROOT BOUND, MAKE A FEW VERTICAL CUTS IN THE ROOT BALL TO STIMULATE NEW ROOT GROWTH.

PLACE PLANT IN CENTER OF HOLE ON FIRM GROUND TO PREVENT FUTURE SETTLING. THE ROOT CROWN OF THE PLANT SHALL BE AT THE SAME LEVEL AS THE FINISH GRADE.

BACK FILL AMENDED NATIVE SOIL IN HOLE, REMOVING AIR POCKETS AND FIRMING SOIL AROUND ROOT BALL WITH HANDS.

THE ROOT BALLS OF PLANTS SHALL NOT BE OUTSIDE OF CONTAINER AND EXPOSED TO AIR LONGER THAN THE NECESSARY TIME REQUIRED TO INSTALL PLANT IN THE GROUND.

FILL HOLE UNTIL SOIL MEETS THE ROOT CROWN OF THE PLANT. THE ROOT CROWN SHALL NOT BE BURIED FOR ANY PROLONGED LENGTH OF TIME OTHER THAN NECESSARY DURING INSTALLATION OF PLANT.

5. USE EXCESS SOIL TO MAKE A 3 INCH BERM WITH AN APPROXIMATE 2 FOOT DIAMETER SURROUNDING THE PLANT, TO FORM A WATERING BASIN.

6. THOROUGHLY WATER PLANT IMMEDIATLEY FOLLOWING PLANTING AND NO LONGER THAN 10 HOURS FOLLOWING PLANTING.

7. WATERING OF INSTALLED PLANTS SHALL CONTINUE AS NEEDED, UNTIL WEATHER ALLOWS CESSATION TO ENSURE HEALTH AND VIGOR OF PLANTS.

8. INSTALL APPROVED WEED MAT AROUND PLANT PER MANUFACTURER SPECIFICATIONS AND FIRMLY SECURE TO GROUND WITH STAPLES.

9. INSTALL APPROVED ANIMAL PROTECTOR AND FIRMLY SECURE TO GROUND. INSTALLED PLANTS SHALL NOT BE LEFT UNPROTECTED OVER NIGHT.

10. PLACE MULCH TO A DEPTH OF 4 INCHES AROUND THE PLANT, COVERING THE WEED MAT ENTIRELY.

11. STAKE ONLY PLANTS WHICH ARE NOT STABILIZED IN GROUND AND REQUIRE ADDITIONAL SUPPORT. IF NECESSARY, STAKE ACCORDING TO DETAIL SHOWN.

12. TREES REMOVED DURING CONSTRUCTION SHALL BE SALVAGED AND PLACED IN MITIGATION SITE AS DIRECTED BY OWNER'S REPRESENTATIVE.

13. EXCAVATE AND REMOVE A MINIMUM OF 24 INCHES OF SOIL IN AREAS COLONIZED BY REED CANARYGRASS OUTSIDE WETLAND BOUNDARY. BRING DISTURBED AREAS TO GRADE WITH CLEAN, WEED AND WEED SEED FREE TOPSOIL AS APPROVED BY OWNER'S REPRESENTATIVE. DISPOSE OF REED CANARYGRASS AND EXCAVATED SOIL OFF SITE.

14. TREES REMOVED DURING CONSTRUCTION SHALL BE SALVAGED & PLACED IN HABITAT MITIGATION AREAS AS STANDING SNAGS & LARGE WOODY DEBRIS.

GENERAL PLANTING NOTES:

1. CONTRACTOR SHALL VERIFY ALL QUANTITIES, MEASUREMENTS AND SITE CONDITIONS.

2. PRIOR TO COMMENCEMENT OF LANDSCAPE WORK, AN ON-SITE MEETING WILL BE HELD WITH THE GENERAL CONTRACTOR, LANDSCAPE CONTRACTOR, AND OWNER'S REPRESENTATIVE. THIS MEETING WILL BE FOR REVIEW AND APPROVAL OF ROUGH GRADING AND TO DIRECT LANDSCAPE CONTRACTOR ON FINISH GRADING AND SOIL PREPARATION. LANDSCAPE CONTRACTOR SHALL BE RESPONSIBLE FOR CONTACTING ALL PARTIES A MINIMUM OF TWO WORKING DAYS IN ADVANCE.

3. ALL PLANT MATERIALS USED SHALL BE GROWN IN CLARK COUNTY VICINITY, AND GROWN WITHIN 50 MILES OF THE PROJECT SITE. PLANT MATERIAL SHALL BE PROPAGATED FROM NATIVE SEED SOURCES, LOCAL TO OREGON OR WASHINGTON, WEST OF THE CASCADES. PROVIDE ONLY SOUND, HEALTHY, VIGOROUS PLANTS, FREE OF DEFECTS, DISEASES AND ALL FORMS OF INFESTATION.

4. A PRE-PLANTING MEETING WILL BE HELD UPON COMPLETION OF FINE-GRADING. LANDSCAPE CONTRACTOR SHALL CONTACT OWNER'S REPRESENTATIVE A MINIMUM OF TWO WORKING DAYS IN ADVANCE. PRIOR TO THE MEETING, LANDSCAPE CONTRACTOR MUST SUBMIT SAMPLES OF COMPOST, BARK MULCH, SEED, AND NURSERY SHIPPING LIST TO OWNER'S REPRESENTATIVE FOR APPROVAL. THE CONTRACTOR WILL STAKE OR FLAG PROPOSED PLANT LOCATIONS, INCLUDING THE CORNERS OF AREAS SHOWN FOR EMERGENT PLANTS, GROUND COVER AND SHRUB MASSES. OWNER'S REPRESENTATIVE WILL PROVIDE DIRECTION AND MAKE ADJUSTMENTS TO PLANT LOCATIONS AT THIS TIME. NO PLANTING WILL BE PERFORMED BEFORE THIS MEETING.

5. PLANTING PERIOD IS WEATHER DEPENDENT, MID-NOVEMBER TO MID-MARCH, AND PLANTING SEQUENCE SHALL BE ADJUSTED ACCORDING TO SOIL MOISTURE. ALL PLANTINGS SHALL BE COMPLETE BY THE FIFTEENTH OF MARCH UNLESS PLANTING PERIOD IS EXTENDED BY OWNER'S REPRESENTATIVE AS A RESULT OF CONTINUING MILD WEATHER. HERBACEOUS WETLAND MAY BE PLANTED IN LATE SUMMER IF GROUNDWATER MOISTENS THOSE PLANTING AREAS. HOWEVER, WOODY PLANT MATERIALS SHALL NOT BE PLANTED UNTIL FALL RAINS HAVE MOISTENED UPLAND LOCATIONS

6. KEEP PLANTS MOIST AND SHADED UNTIL INSTALLATION. DO NOT LEAVE THEM IN THE SUN OR LET THEM DRY OUT. THOROUGHLY WATER IN NEWLY PLANTED AREAS AND SATURATE EMERGENT PLANTS WITHIN 12 HOURS AFTER INSTALLATION.

7. DIG, PACK, TRANSPORT AND HANDLE ALL PLANTS WITH CARE TO ENSURE PROTECTION FROM INJURY. STORE PLANTS IN THE MANNER NECESSARY TO ACCOMMODATE THEIR HORTICULTURAL REQUIREMENTS. HEEL-IN PLANTS TO PROTECT ROOT BALLS AND KEEP THEM FROM DRYING OUT.

8. USE COMPOST AS SPECIFIED IN SPECIAL PROVISION SECTION 8-02.3(5) AND 8-02.3(6) OR EQUAL APPROVED BY CLARK COUNTY.

9. EMERGENT SEED AREAS SHALL RECEIVE COIR BLANKET STAPLED INTO PLACE AFTER FINE GRADING AND SEEDING ARE COMPLETED.

10. ALL PLANTS, MATERIALS, PLANTING AND SEEDING ACTIVITIES SHALL CONFORM IN SIZE AND GRADE TO THE 'AMERICAN STANDARD FOR NURSERY STOCK'. INFERIOR PLANTS SEED, OR WORKMANSHIP SHALL BE REJECTED BY OWNER'S REPRESENTATIVE.

11. PLANTS SHALL BE INSTALLED ACCORDING TO DETAILS. ALL STEPS IN PLANTING PROCESS SHALL BE PERFORMED AT THE TIME OF PLANTING. ONLY PLANTS WHICH REQUIRE ADDITIONAL SUPPORT, ARE TO BE STAKED. STAKES AND TIES, IF NECESSARY, SHALL BE REMOVED AFTER ONE YEAR.

12. PLANTS SHALL NOT BE INSTALLED WITHIN 5 FEET OF FENCE OR WITHIN 15 FEET OF CULVERT OR INLET.

13. PLANT SUBSTITUTION REQUEST MUST BE SUBMITTED TO CLARK COUNTY REPRESENTATIVE FOR APPROVAL.

14. CONTRACTOR SHALL COORDINATE WEED ERADICATION WITH CLARK COUNTY WEED MANAGEMENT. PHYSICAL REMOVAL OF WEEDS BY THE CONTRACTOR SHALL BE PERMISSIBLE. HERBICIDE USE AND CHEMICAL ERADICATION SHALL BE PERFORMED BY CLARK COUNTY. CONTROL BLACKBERRIES, THISTLE, TEASEL, PURPLE LOOSESTRIFE, SCOT'S BROOM, REED CANARYGRASS, ENGLISH IVY AND OTHER NOXIOUS OR INVASIVE WEEDS WHICH MAY DEVELOP ON SITE FOR DURATION OF WARRANTY PERIOD.

15. CONTRACTOR SHALL REPAIR AND SEED ALL AREAS DISTURBED THROUGHOUT COURSE OF CONSTRUCTION WITH APPROPRIATE SEED MIX AND APPLICATION RATE AS PRESCRIBED IN PLANT LEGEND AND SPECIFICATIONS. CONTRACTOR MAY SELECT SEEDING METHOD WITH APPROVAL OF CLARK COUNTY REPRESENTATIVE. AREAS WHICH FAIL TO ESTABLISH UNIFORM COVER SHALL BE RESEEDED AS NECESSARY.

16. CONTRACTOR SHALL PROVIDE TWO-YEAR PLANT WARRANTY AFTER ACCEPTANCE OF PLANTING. THE CONTRACTOR SHALL REPLACE ALL DEAD OR UNHEALTHY PLANTS FOUND BY OWNER'S REPRESENTATIVE AT THE END OF EACH ESTABLISHMENT PERIOD UNDER WARRANTY.

17. CONTRACTOR SHALL MAINTAIN WEEKLY; OR AS NEEDED TO PROVIDE ADEQUATE WATERING OF INSTALLED PLANTS TO ENSURE HEALTH AND SURVIVAL. CONTRACTOR SHALL BE RESPONSIBLE FOR THE ON-GOING HEALTH AND VIGOR OF PLANTS DURING THE PLANT ESTABLISHMENT PERIOD AS SPECIFIED IN SECTION 8-02.3(13) OF THE AMENDMENTS TO THE STANDARD SPECIFICATIONS. MAINTNENANCE SHALL INCLUDE MOW TALL GRASS/WEEDS, MONITOR TREE STAKES AND GUYS TO ENSURE PROPER SUPPORT WITHOUT DAMAGE TO TREE, AND RE-APPLY BARK MULCH AS NEEDED.

90% PLANS - PRELIMINARY

DESIGNED	TLJ
DRAWN	TLJ
CRP	321222
HOR.	1"=20'
VERT.	NA
DATE	11/04
DWG:	LS4
SHEET	55 OF 105

CALL 48 HOURS BEFORE YOU DIG
1-800-553-4344
"It's the Law"
NORTHWEST UTILITIES NOTIFICATION CENTER

DESIGN & ENGINEERING DIVISION
DESIGN SECTION

BETTS BRIDGE #26 REPLACEMENT (SALMON CREEK AVE.)
PLANTING DETAILS

proud past, promising future
CLARK COUNTY
WASHINGTON

FEDERAL AID # BRM-4231(004)

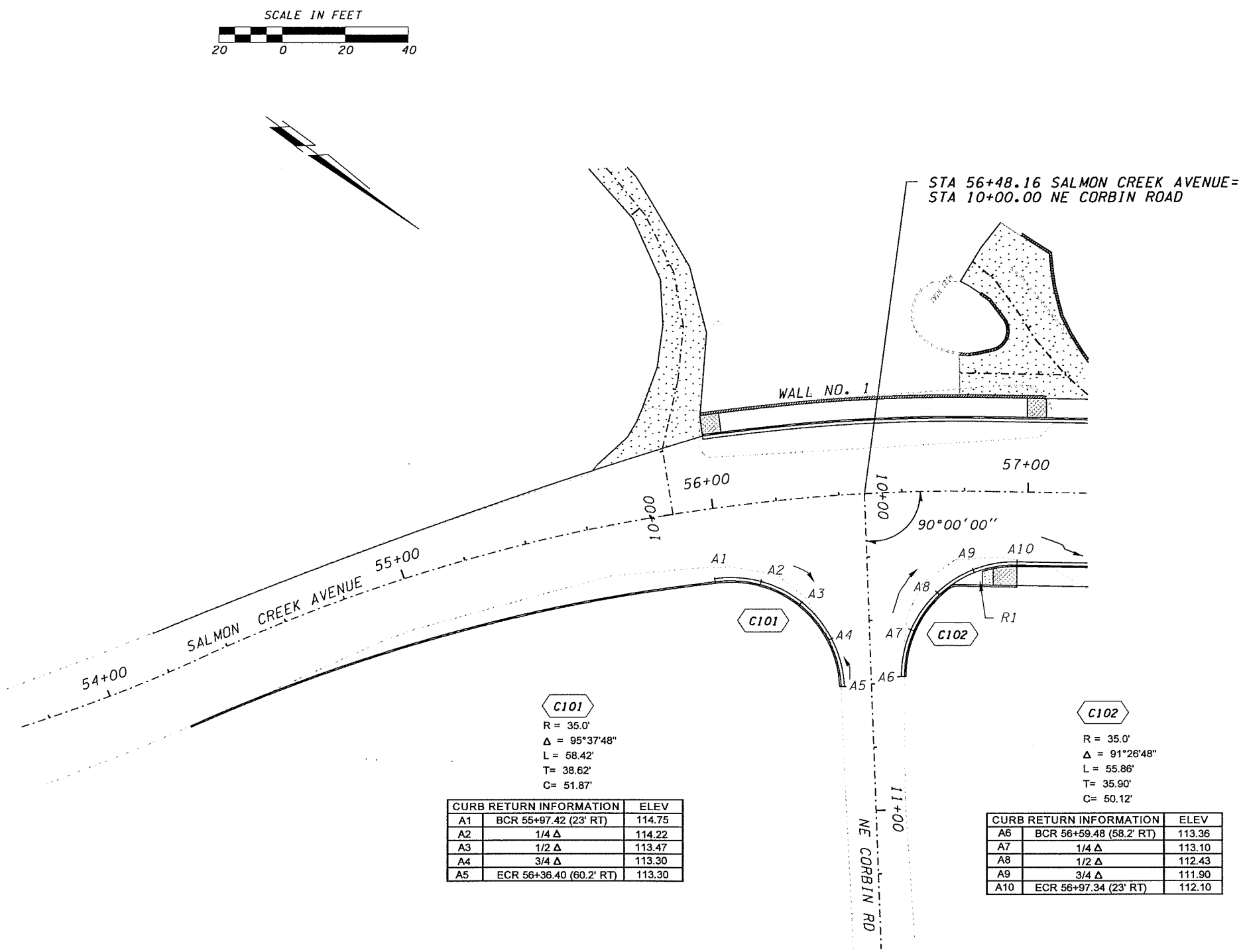

C101

R = 35.0'
Δ = 95°37'48"
L = 58.42'
T= 38.62'
C= 51.87'

CURB RETURN INFORMATION		ELEV
A1	BCR 55+97.42 (23' RT)	114.75
A2	1/4 Δ	114.22
A3	1/2 Δ	113.47
A4	3/4 Δ	113.30
A5	ECR 56+36.40 (60.2' RT)	113.30

C102

R = 35.0'
Δ = 91°26'48"
L = 55.86'
T= 35.90'
C= 50.12'

CURB RETURN INFORMATION		ELEV
A6	BCR 56+59.48 (58.2' RT)	113.36
A7	1/4 Δ	113.10
A8	1/2 Δ	112.43
A9	3/4 Δ	111.90
A10	ECR 56+97.34 (23' RT)	112.10

SIDEWALK RAMP SCHEDULE

RAMP	TYPE	FACE OF RAMP	BACK OF RAMP
R1	6	10+28, 28.1' LT	10+28, 47.3' LT

SEE DETAIL F6, SHEET RD2

RAMP OFFSET IS MEASURED FROM CENTERLINE OF RESPECTIVE STREET TO CENTER OF RAMP

NOTE: ELEV = Top of curb elevation.

FEDERAL AID # BRM-4231(004)

PLOT1

90% PLANS
PRELIMINARY

DESIGN & ENGINEERING DIVISION
DESIGN SECTION

BETTS BRIDGE #26 REPLACEMENT (SALMON CREEK AVE.)
INTERSECTION PLAN CORBIN ROAD

CALL 48 HOURS BEFORE YOU DIG
1-800-553-4344
"It's the Law"
NORTHWEST UTILITIES NOTIFICATION CENTER

DESIGNED	PW
DRAWN	PW
CRP	321222
HOR.	20
VERT.	20
DATE	11/04
DWG:	INTI
SHEET	56 OF 105

proud past, promising future
CLARK COUNTY
WASHINGTON

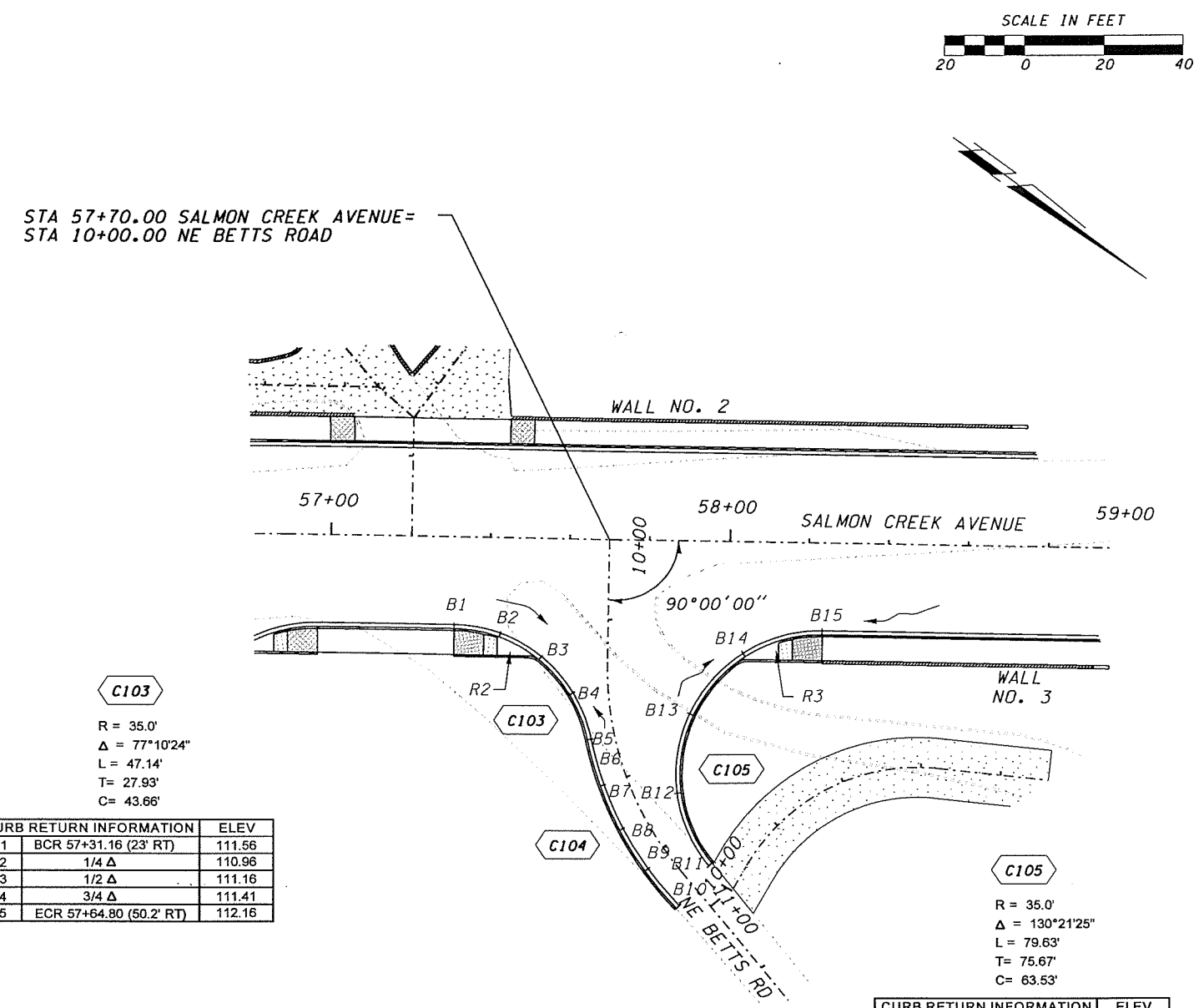

C103

R = 35.0'
Δ = 77°10'24"
L = 47.14'
T= 27.93'
C= 43.66'

CURB RETURN INFORMATION		ELEV
B1	BCR 57+31.16 (23' RT)	111.56
B2	1/4 Δ	110.96
B3	1/2 Δ	111.16
B4	3/4 Δ	111.41
B5	ECR 57+64.80 (50.2' RT)	112.16

C104

R = 86.86'
Δ = 31°55'349
L = 48.41'
T= 24.85'
C= 47.48'

CURB RETURN INFORMATION		ELEV
B6	BCR 57+64.80 (50.2' RT)	112.16
B7	1/4 Δ	113.50
B8	1/2 Δ	114.47
B9	3/4 Δ	115.82
B10	ECR 57+88.20 (92' RT)	116.46

C105

R = 35.0'
Δ = 130°21'25"
L = 79.63'
T= 75.67'
C= 63.53'

CURB RETURN INFORMATION		ELEV
B11	BCR 57+96.90 (80.6' RT)	116.54
B12	1/4 Δ	114.83
B13	1/2 Δ	112.85
B14	3/4 Δ	110.54
B15	ECR 58+23.56 (23' RT)	111.10

SIDEWALK RAMP SCHEDULE

RAMP	TYPE	FACE OF RAMP	BACK OF RAMP
R2	6	10+27, 22.7' RT	10+27, 30.8' RT
R3	6	10+27, 37.5' LT	10+27, 46.1' LT

SEE DETAIL F6, SHEET RD2

RAMP OFFSET IS MEASURED FROM CENTERLINE OF RESPECTIVE STREET TO CENTER OF RAMP

NOTE: ELEV = Top of curb elevation.

FEDERAL AID # BRM-4231(004)

PLOT2

DESIGNED	PW
DRAWN	PW
CRP	321222
HOR.	20
VERT.	20
DATE	11/04
DWG:	INT2
SHEET	57 OF 105

CALL 48 HOURS BEFORE YOU DIG
1-800-553-4344
"It's the Law"
NORTHWEST UTILITIES NOTIFICATION CENTER

90% PLANS
PRELIMINARY

DESIGN & ENGINEERING DIVISION
DESIGN SECTION

BETTS BRIDGE #26 REPLACEMENT (SALMON CREEK AVE.)
INTERSECTION PLAN BETTS ROAD

proud past, promising future

CLARK COUNTY
WASHINGTON

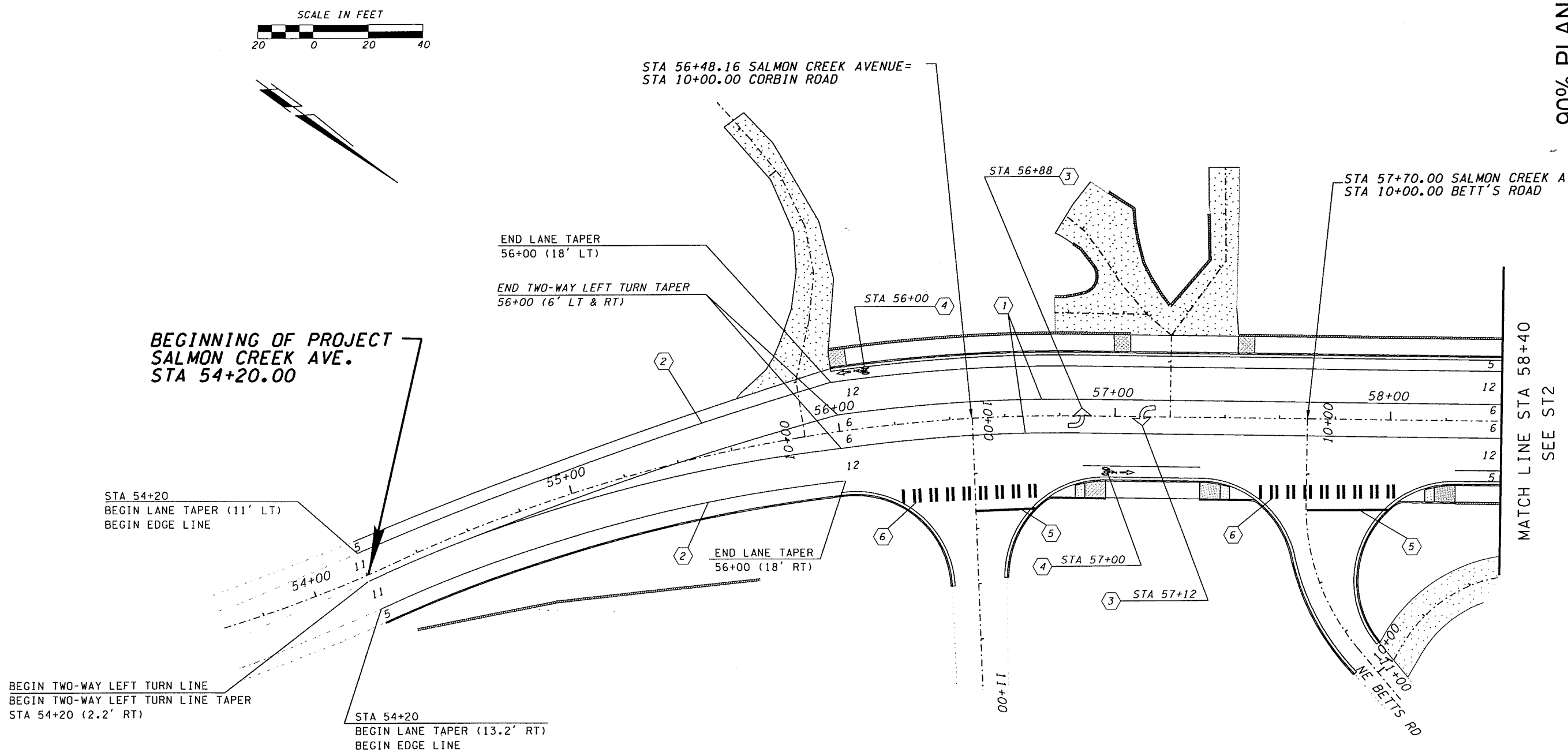

90% PLANS
PRELIMINARY

DESIGNED	PW
DRAWN	PW
CRP	321222
HOR.	1" = 20'
VERT.	1" = 5'
DATE	11/04
DWG:	ST1
SHEET	58 OF 105

CALL 48 HOURS BEFORE YOU DIG
1-800-553-4344
"It's the Law"
NORTHWEST UTILITIES NOTIFICATION CENTER

DESIGN & ENGINEERING DIVISION
DESIGN SECTION

BETTS BRIDGE #26 REPLACEMENT (SALMON CREEK AVE.)
SIGNING AND STRIPING PLAN

NOTES:

1) SIGNING AND STRIPING TO BE DONE BY CLARK COUNTY PUBLIC WORKS
2) STRIPE REMOVAL TO BE DONE UNDER THIS CONTRACT

GENERAL NOTES:

1. TWO-WAY LEFT TURN LINE (YELLOW 4")
2. EDGE LINE (WHITE 4")
3. TRAFFIC ARROWS TYPE 2 (WHITE)
4. BICYCLE LANE SYMBOL (WHITE)
5. STOP LINE WHITE)
6. CROSSWALK LINE WHITE)

proud past, promising future
CLARK COUNTY WASHINGTON

FEDERAL AID # BRM-4231(004)

PLOT1

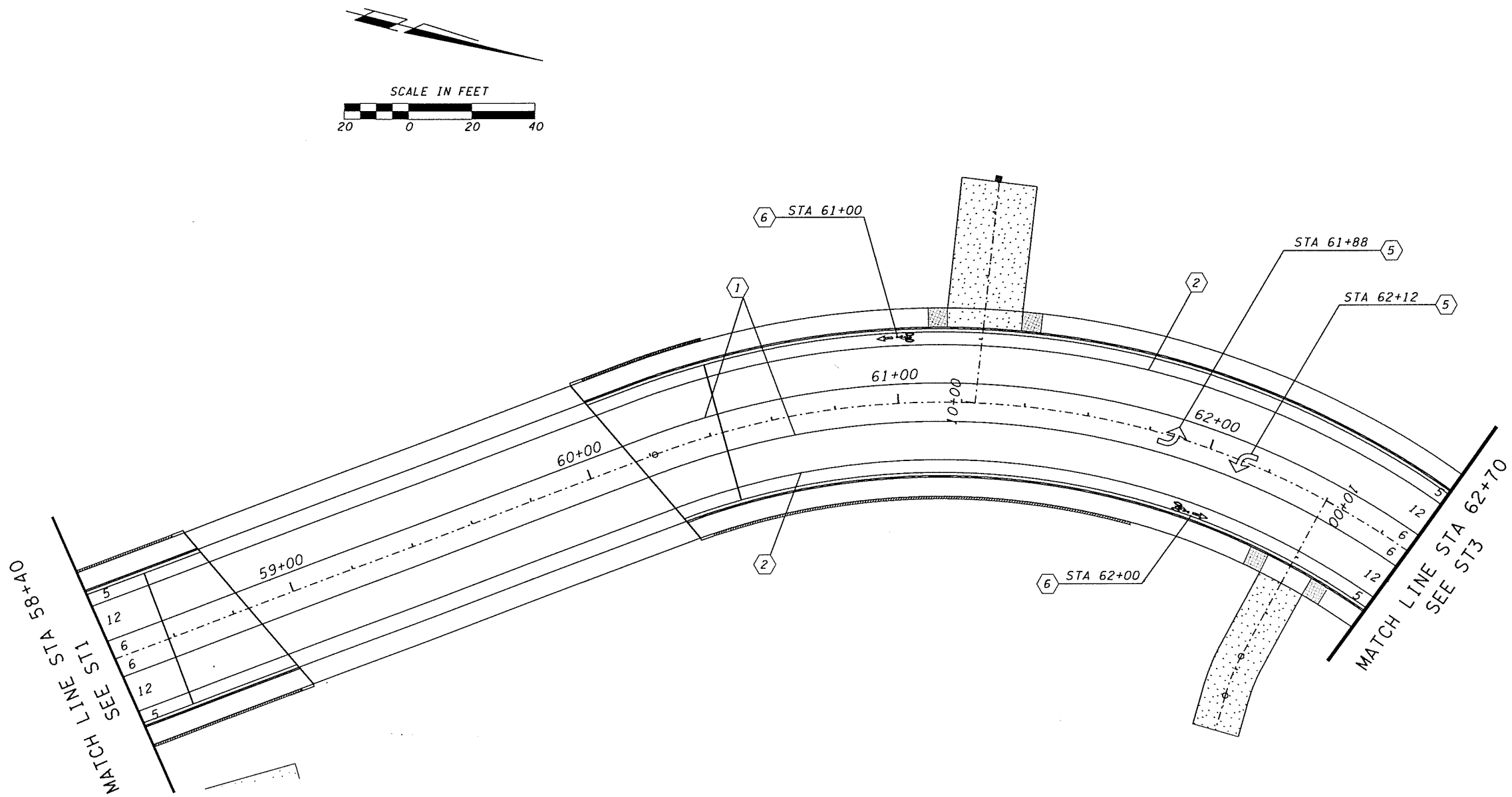

NOTES:

1) SIGNING AND STRIPING TO BE DONE BY CLARK COUNTY PUBLIC WORKS
2) STRIPE REMOVAL TO BE DONE UNDER THIS CONTRACT

GENERAL NOTES:

1. TWO-WAY LEFT TURN LINE (YELLOW 4")
2. EDGE LINE (WHITE 4")
3. TRAFFIC ARROWS TYPE 2 (WHITE)
4. BICYCLE LANE SYMBOL (WHITE)
5. STOP LINE WHITE)
6. CROSSWALK LINE WHITE)

90% PLANS
PRELIMINARY

DESIGNED	PW
DRAWN	PW
CRP	321222
HOR.	1" = 20'
VERT.	1" = 5'
DATE	11/04
DWG:	ST2
SHEET	59 OF 105

CALL 48 HOURS BEFORE YOU DIG
1-800-553-4344
"It's the Law"
NORTHWEST UTILITIES NOTIFICATION CENTER

DESIGN & ENGINEERING DIVISION
DESIGN SECTION

BETTS BRIDGE #26 REPLACEMENT (SALMON CREEK AVE.)
SIGNING AND STRIPING PLAN

proud past, promising future
CLARK COUNTY
WASHINGTON

FEDERAL AID # BRM-4231(004)

PLOT2

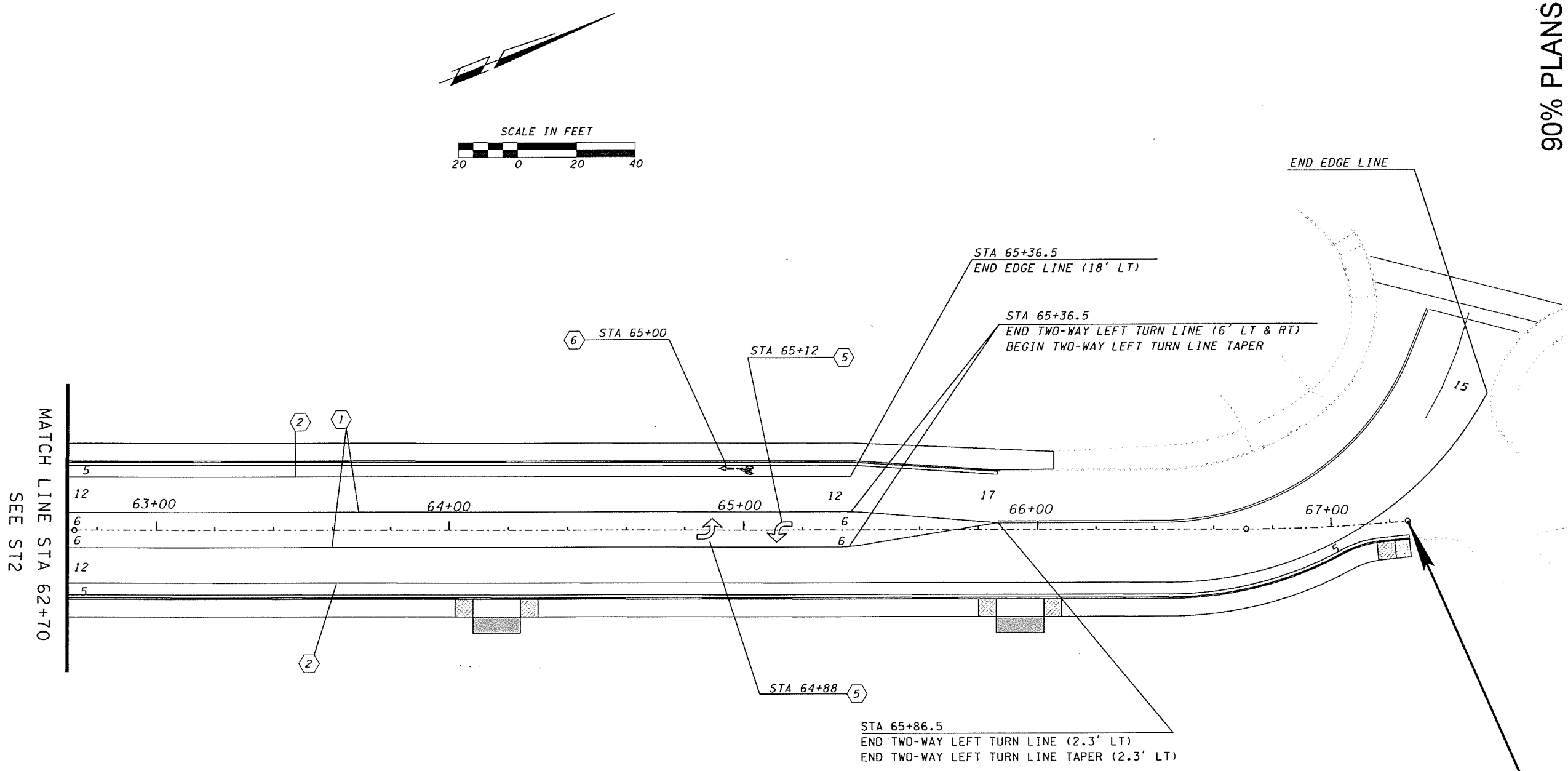

NOTES:

1) SIGNING AND STRIPING TO BE DONE BY CLARK COUNTY PUBLIC WORKS
2) STRIPE REMOVAL TO BE DONE UNDER THIS CONTRACT

GENERAL NOTES:

1. TWO-WAY LEFT TURN LINE (YELLOW 4")
2. EDGE LINE (WHITE 4")
3. TRAFFIC ARROWS TYPE 2 (WHITE)
4. BICYCLE LANE SYMBOL (WHITE)
5. STOP LINE WHITE)
6. CROSSWALK LINE WHITE)

90% PLANS
PRELIMINARY

DESIGNED	PW
DRAWN	PW
CRP	321222
HOR.	1" = 20'
VERT.	1" = 5'
DATE	11/04
DWG:	ST3
SHEET	60 OF 105

CALL 48 HOURS BEFORE YOU DIG
1-800-553-4344
"It's the Law"
NORTHWEST UTILITIES NOTIFICATION CENTER

DESIGN & ENGINEERING DIVISION
DESIGN SECTION

BETTS BRIDGE #26 REPLACEMENT (SALMON CREEK AVE.)
SIGNING AND STRIPING PLAN

proud past, promising future
CLARK COUNTY WASHINGTON

FEDERAL AID # BRM-4231(004)

PLOT3

SITE PLAN SYMBOLOGY

- EMBANKMENT SLOPE
- 50.5 — CONTOUR
- VEGETATION
- CLEAN OUT
- SANITARY MANHOLE
- MW — MONITORING WELL
- PZ — PIEZOMETER
- CB — STORM DRAIN CATCH BASIN
- UV — UTILITY VAULT
- PP — POWER POLE
- TP — TELEPHONE POLE
- FH — FIRE HYDRANT
- YH-X — YARD HYDRANT
- 75.5 — EXISTING SPOT ELEVATION
- 75.8 — FINISHED SPOT ELEVATION
- HORIZONTAL CP-X, CONTROL POINT
- BENCHMARK
- TH-"X" — IDENTIFICATION AND APPROXIMATE LOCATION OF SOIL TEST HOLE
- DOWNGUY

NOTES:

1. UTILITIES THAT ARE SUSPENDED ABOVE GRADE ARE DESIGNATED BY THE PREFIX "OH".

- T — TELEPHONE LINE
- E — ELECTRIC LINE
- F — FIBER OPTIC
- C — COMMUNICATION
- HANDRAIL
- PIPELINE
- PROPOSED TRUNK SEWER
- PIPELINE BENEATH CONCRETE OR STRUCTURE
- RAILROAD
- DRAINAGE FLOW
- NATURAL WATERWAY
- X — X — FENCE
- PROPERTY LINE / RIGHT-OF-WAY LINE
- CENTERLINE
- RB — ROCK BERM
- SF — SILT FENCE
- SAWCUT EXISTING PAVEMENT

PIPING SYMBOLOGY

NOTES:

1. VALVE TYPES FOR VALVES 4" AND LARGER ARE INDICATED BY SYMBOLOGY SHOWN BELOW. VALVES 3-1/2" AND SMALLER MAY BE SHOWN WITH GATE VALVE SYMBOL

   REGARDLESS OF VALVE TYPE – REFER TO SPECIFICATIONS FOR REQUIREMENTS.

2. SYMBOLOGY SHOWN IS FOR SINGLE LINE PIPING. DOUBLE LINE PIPING SYMBOLS ARE SIMILAR.

VALVES

- GATE VALVE
- GLOBE VALVE
- BALL VALVE
- CHECK VALVE
- DOUBLE DISK CHECK VALVE
- BALL CHECK VALVE
- BUTTERFLY VALVE
- DIAPHRAGM VALVE
- PINCH VALVE
- KNIFE GATE VALVE
- OR — PRESSURE RELIEF VALVE
- PLUG VALVE
- NEEDLE VALVE
- PRESSURE REDUCING VALVE
- X — AIR RELIEF / VACUUM VALVE, A = AIR RELIEF, V = VACUUM
- PRESSURE REGULATING VALVE
- THREE WAY BALL VALVE
- THREE WAY PLUG VALVE

MISCELLANEOUS

- VARIABLE AREA METER
- ROTAMETER
- UNION
- WYE-STRAINER LINE SIZE CHANGE (CONCENTRIC REDUCER)
- FLEXIBLE HOSE OR TUBING
- FLEXIBLE PIPING CONNECTION
- LINE SIZE CHANGE (CONCENTRIC REDUCER)
- LINE SIZE CHANGE (ECCENTRIC REDUCER)
- LINE TURNING DOWN
- LINE TURNING UP
- BLIND FLANGE
- PIPE JOINT (SEE SPECS FOR REQUIREMENTS)
- SLEEVE TYPE COUPLING
- FLANGED COUPLING ADAPTER (FCA)
- FLEXIBLE CONNECTION
- HARNESSED MECHANICAL COUPLING

MISCELLANEOUS (CONTINUED)

- PRESSURE GAGE (W/COCK)
- TRAP
- QUICK DISCONNECT CAM & GROOVE COUPLING
- CAP or PLUG
- CO — INTERIOR CLEANOUT
- HB-X — HOSE VALVE, HOSE BIBB OR FLUSHING CONNECTION
- HR-X — HOSE RACK
- FD-X — FLOOR DRAIN

X = TYPE DESIGNATED IN SPECIFICATIONS

- PIPE IN SECTION
- BU — BELL UP (PLAN)
- BU — BELL UP (SECTION OR SCHEMATIC)
- D — DRAIN (SECTION OR SCHEMATIC)
- ATA — AIR TOOL ASSEMBLY
- AVS — AUTOMATIC VALVE STATION
- PRS — PRESSURE REDUCING STATION
- FLANGED FITTING
- MECHANICAL JOINT FITTING

MATERIALS IN PLAN/SECTION

- DEMOLITION
- CONCRETE
- ASPHALT
- GRANULAR FILL
- SAND
- EARTH
- METAL (SECTION)
- GRATING (PLAN)
- PAVEMENT RESTORATION

EXISTING SYMBOLOGY

- EXISTING WATER VALVE
- EXISTING POWER POLE
- EXISTING TELEPHONE POLE
- EXISTING SANTARY MANHOLE
- EXISTING SANTARY MANHOLE W/ SEWER LINE PLUGGED
- EXISTING WATER METER
- EXISTING CATCH BASIN
- EXISTING ELECTRICAL BOX
- EXISTING TELEPHONE BOX
- EXISTING CONIFEVOUS TREE
- EXISTING DECIDUOUS TREE
- EXISTING PAVEMENT
- EXISTING SANITARY SEWER
- EXISTING STORM SEWER
- EXISTING OVERHEAD POWER
- EXISTING UNDERGROUND TELEPHONE
- EXISTING WATER MAIN
- EXISTING BG FORCE MAIN
- EXISTING GAS MAIN
- EXISTING FENCE

IDENTIFICATION SYMBOLOGY

PIPING:

FIGURE: 36-PLE — EXAMPLE

- LINE SIZE — 36"
- SERVICE — PLANT EFFLUENT

EQUIPMENT TAG NUMBERS:

ALTERNATE 1

FIGURE: NPWP2023 — EXAMPLE

- SERVICE ABBREVIATION — INDICATES NON POTABLE WATER
- EQUIPMENT ABBREVIATION — INDICATES PUMP
- BUILDING OR STRUCTURE NUMBER — BUILDING 20
- EQUIPMENT NUMBER — PUMP 23

ALTERNATE 2

FIGURE: NPWP-23 — EXAMPLE

- SERVICE ABBREVIATION — INDICATES NON POTABLE WATER
- EQUIPMENT ABBREVIATION — INDICATES PUMP
- BUILDING OR STRUCTURE NUMBER — PUMP 23

GENERAL SYMBOLOGY

ARROW INDICATES DIRECTION OF PLAN NORTH

PLAN
1/4" = 1'-0"

SECTION CUT MARKER

- SECTION LETTER
- FLAG INDICATES DIRECTION OF SECTION CUT
- * DRAWING WHERE SECTION VIEW IS LOCATED

SECTION
3/8" = 1'-0"

- SECTION LETTER
- * DRAWING WHERE SECTION VIEW IS FIRST CUT

DETAIL MARKER

- DETAIL NUMBER
- * DRAWING WHERE DETAIL IS LOCATED

DETAIL
3" = 1'-0"

- DETAIL NUMBER
- * DRAWING WHERE DETAIL WAS TAKEN

SINGLE ELEVATION OR PHOTO MARKER

- ELEVATION LETTER
- ARROW INDICATES POINT OF VIEW
- * DRAWING WHERE ELEVATION IS LOCATED

MULTIPLE ELEVATION OR PHOTO MARKER

- ELEVATION LETTER
- ARROW INDICATES POINT OF VIEW ELEVATION
- INDICATES DRAWING WHERE ELEVATION IS LOCATED

ELEVATION
3" = 1'-0"

- ELEVATION IDENTIFICATION LETTER
- * DRAWING WHERE POINT OF VIEW MARKER CAN BE FOUND

* IF PLAN AND SECTION, OR DETAIL CALL-OUT AND DETAIL ARE SHOWN ON SAME DRAWING, DRAWING NUMBER IS REPLACED BY A LINE (–).

- DESCRIPTION: PRE-CAST MANHOLE
- SPECIFICATION SECTION AND DETAIL NUMBER: 02515X01

STANDARD DETAIL MARKER

- KEYNOTE NUMBER

KEYNOTE DESIGNATION

GENERAL NOTES:

1. THIS IS A STANDARD DRAWING SHOWING COMMON SYMBOLOGY. ALL SYMBOLS ARE NOT NECESSARILY USED ON THIS PROJECT.
2. SCREENING OR SHADING OF WORK IS USED TO INDICATE EXISTING COMPONENTS OR TO DEEMPHASIZE PROPOSED IMPROVEMENTS TO HIGHLIGHT SELECTED TRADE WORK. REFER TO CONTEXT OF EACH DRAWING FOR USAGE.
3. SEE PROJECT EQUIPMENT AND PIPING SYSTEMS DRAWING FOR SYMBOLS AND ABBREVIATIONS SPECIFIC TO THE PROJECT.

FEDERAL AID # BRM-4231(004)

PHASE2-9873-G02.dwg

DESIGNED	ECB
DRAWN	BC
CRP	321222
HOR.	AS SHOWN
VERT.	N/A
DATE	10/04
DWG:	G-2
SHEET	6 OF 105

CALL 48 HOURS BEFORE YOU DIG 1-800-553-4344 "It's the Law" NORTHWEST UTILITIES NOTIFICATION CENTER

BYRON GLENN PERRY — STATE OF WASHINGTON — 34831 — REGISTERED PROFESSIONAL ENGINEER — EXPIRES: 10/17/06

DESIGN & ENGINEERING DIVISION
DESIGN SECTION

BETTS BRIDGE #26 REPLACEMENT (SALMON CREEK AVE.)
GENERAL SYMBOLS

HDR Engineering, Inc.

proud past, promising future

CLARK COUNTY WASHINGTON

FILE: P:\0098721\3.0_CAD_Drawings\Dwg\PHASE2-9873-G02.dwg | XREFS: PHASE2-9873bgn-G02.dwg BGN-XLG.dwg | PLOT DATE: Nov 02, 2004 – 7:45am | USER: kgandy

FILE: P:\009872\13.0_CAD_Drawings\Dwg\PHASE2-9873-G03.dwg | XREFS: PHASE2-2234bdr-052.dwg BGP-WA.dwg 9873-G03.dwg 2234BDR-052.DWG | PLOT DATE: Nov 02, 2004 - 7:46am | USER: sgundy

A/C	AIR CONDITIONING
A/E	ARCHITECT/ENGINEER
A	ARCHITECTURAL (DWG DISCIPLINE), AMP
AB	ANCHOR BOLT
ABC	AGGREGATE BASE COURSE
ABAN	ABANDON
AC	ALTERNATING CURRENT
ACK	ACKNOWLEDGE
ACP	ACOUSTIC CEILING PANEL, ASPHALTIC CONCRETE PAVEMENT
ACST	ACOUSTIC
AD	ADDENDUM, AREA DRAIN
ADDL	ADDITIONAL
ADH	ADHESIVE
ADJ	ADJUSTABLE, ADJACENT
AF	AMP FRAME, AMP FUSE
AFF	ABOVE FINISH FLOOR
AFG	ABOVE FINISH GRADE
AGGR	AGGREGATE
AI	AREA INLET
AIC	AMPS INTERRUPTING CAPACITY
ALIG	ALIGNMENT
ALUM	ALUMINUM
ALT	ALTERNATE, ALTITUDE
AM	ACOUSTICAL MATERIAL
AMB	AMBIENT
ANC	ANCHOR
AP	ACCESS PANEL
APRX	APPROXIMATE
APVD	APPROVED
ARCH	ARCHITECTURAL
ASSY	ASSEMBLY
AT	AMP TRIP
ATC	ACOUSTICAL TILE CEILING
ATM	ATMOSPHERE
AUTO	AUTOMATIC
AUX	AUXILIARY
AVE	AVENUE
AVG	AVERAGE
AWG	AMERICAN WIRE GAGE
AWT	ACOUSTICAL WALL TILE
B/B	BACK TO BACK
BAL	BALANCE
BBD	BULLETIN BOARD
BC	BASE CABINET, BOTTOM CHORD, BOLT CENTER, BOLT CIRCLE
BD	BOARD
BE	BOTH ENDS, BELL END
BF	BOTH FACES, BOTTOM FACE, BLIND FLANGE, BOARD FEET
BITUM	BITUMINOUS
BKG	BACKING
BL	BASE LINE
BLDG	BUILDING
BLK	BLOCK
BLKG	BLOCKING
BM	BENCHMARK, BEAM
BOC	BACK OF CURB
BOD	BOTTOM OF DUCT
BOG	BOTTOM OF GRILLE
BOL	BOTTOM OF LOUVER
BOP	BOTTOM OF PIPE
BOR	BOTTOM OF REGISTER
BOT	BOTTOM
BOU	BOTTOM OF UNIT
BP	BASE PLATE
BRG	BEARING
BRGP	BEARING PLATE
BRKT	BRACKET
BS	BOTH SIDES
BTU	BRITISH THERMAL UNIT
BTW	BETWEEN
BTWLD	BUTT WELD
BU	BELL UP, BUILT UP
BUR	BUILT-UP ROOFING
BW	BOTH WAYS
BYP	BYPASS
C TO C	CENTER TO CENTER
C&G	CURB & GUTTER
C	CHANNEL SHAPE, CENTIGRADE, CONDUIT, CIVIL (DRAWING DISCIPLINE)
CAB	CABINET
CAP	CAPACITY
CAT	CATALOG
CAV	CAVITY
CB	CATCH BASIN
CCB	CONCRETE BLOCK
CCW	COUNTER CLOCKWISE
CDF	CONTROLLED DENSITY FILL
CE	CONCRETE EDGE
CER	CERAMIC
CF	CUBIC FEET (FOOT)
CFL	COUNTER FLASHING
CHFR	CHAMFER
CHBD	CHALKBOARD
CHD	CHORD
CHH	COMMUNICATION HANDHOLE
CI	CURB INLET
CIP	CAST-IN-PLACE
CIPB	CONCRETE INTERLOCKING PAVER BALLAST
CIRC	CIRCULATION, CIRCULAR
CJ	CONSTRUCTION JOINT
CKT	CIRCUIT
CL	CENTERLINE, CLASS, CLOSE
CLG	CEILING
CLJ	CONTROL JOINT
CLKG	CAULKING
CLR	CLEAR
CMH	COMMUNICATION MANHOLE
CMU	CONCRETE MASONRY UNIT
CO	CLEAN OUT, CONCRETE OPENING
COL	COLUMN
COM	COMMON
COMB	COMBINATION
COMM	COMMUNICATION
COMP	COMPOSITION, COMPRESSIBLE, COMPOSITE
CONC	CONCRETE
CONN	CONNECTION
CONST	CONSTRUCTION
CONT	CONTINUOUS
COOR	COORDINATE
CORR	CORROSIVE, CORRUGATED

CP	CHECKER PLATE, CONTROL POINT
CPLG	COUPLING
CRL	CORROSION RESISTANT LINING
CSC	COMPRESSION SLEEVE COUPLING
CSK	COUNTERSINK
CSS	CLINIC SERVICE SINK
CT	CERAMIC TILE
CTR	CENTER
CTRL	CONTROL
CVT	CULVERT
CU	COPPER, CUBIC
CW	CLOCKWISE
CY	CUBIC YARD
d	PENNY (NAIL MEASURE)
D	DEEP, DIFFUSER
DB	DUCT BANK, DECIBEL, DRY BULB
DBA	DEFORMED BAR ANCHOR
DBL	DOUBLE
DC	DIRECT CURRENT
DEG	DEGREE
DEG C	DEGREE CENTIGRADE
DEG F	DEGREE FAHRENHEIT
DEMO	DEMOLITION
DEP	DEPRESSED
DEPT	DEPARTMENT
DET	DETAIL
DI	DROP INLET, DUCTILE IRON
DIA	DIAMETER
DIAG	DIAGONAL, DIAGRAM
DIFF	DIFFERENTIAL, DIFFERENCE
DIM	DIMENSION
DIP	DUCTILE IRON PIPE
DISCH	DISCHARGE
DIST	DISTANCE, DISTRIBUTION
DIV	DIVISION
DL	DEAD LOAD
DMJ	DOUBLE MECHANICAL JOINT
DMPF	DAMP PROOFING
DN	DOWN
DO	DISSOLVED OXYGEN, DITTO
DP	DEPTH
DPDT	DOUBLE POLE, DOUBLE THROW
DPST	DOUBLE POLE, SINGLE THROW
DS	DOWN SPOUT
DT	DOUBLE TEE, DRIP TRAP ASSEMBLY
DUP	DUPLICATE
DWG	DRAWING
DWL	DOWEL
DWR	DRAWER
E	EAST, ELECTRICAL (DWG DISCIPLINE)
EA	EACH, EXHAUST AIR
EC	ELECTRICAL CONTRACTOR
ECC	ECCENTRIC
ED	EQUIPMENT DRAIN
EDB	ELECTRICAL DUCT BANK
EE	EACH END
EF	EACH FACE
EFF	EFFLUENT, EFFICIENCY
EHH	ELECTRICAL HANDHOLE
EIFS	EXTERIOR INSULATION & FINISH SYSTEM
EJ	EXPANSION JOINT
EL	ELBOW, ELEVATION
ELEC	ELECTRICAL
EMBD	EMBEDDED
EMER	EMERGENCY
EMH	ELECTRICAL MANHOLE
ENCL	ENCLOSURE
ENGR	ENGINEER
ENTR	ENTRANCE
EOP	EDGE OF PAVEMENT
EQ	EQUAL
EQUIP	EQUIPMENT
EQUIV	EQUIVALENT
ES	EACH SIDE, EQUAL SPACE, EMERGENCY SHOWER
ESEW	EMERGENCY SHOWER AND EYE WASH
EST	ESTIMATE
EW	EACH WAY, EMERGENCY EYE/FACE WASH
EWC	ELECTRIC WATER COOLER
EWEF	EACH WAY, EACH FACE
EWTB	EACH WAY, TOP AND BOTTOM
EXC	EXCAVATION
EXH	EXHAUST
EX, EXIST	EXISTING
EXP	EXPANSION, EXPOSED
EXT	EXTERIOR, EXTERNAL, EXTENSION
F&B	FACE & BYPASS
F TO F	FACE TO FACE
FAB	FABRICATE
FB	FLOOR BEAM
FBD	FIBERBOARD
FBG	FIBERGLASS
FBM	BOARD FOOT MEASURE
FBO	FURNISHED BY OWNER
FC	FLUSHING CONNECTION
FCA	FLANGED COUPLING ADAPTER
FD	FLOOR DRAIN
FDC	FLEXIBLE DUCT CONNECTION
FDTN	FOUNDATION
FDR	FEEDER FACTORY FINISH, FLAT FACE
FE	FLANGED END
FEC	FIRE EXTINGUISHER CABINET
FES	FLARED END SECTION
FEXT	FIRE EXTINGUISHER
FF	
FG	FINISHED GRADE
FIG	FIGURE
FH	FIRE HYDRANT
FIN	FINISH
FJT	FLUSH JOINT
FL	FLOW, FLOW LINE
FLEX	FLEXIBLE
FLG	FLANGE
FLOR	FLUORESCENT
FLR	FLOOR
FLS	FLASHING, FLUSH

FO	FINISHED OPENING
FN	FENCE
FOB	FLAT ON BOTTOM
FOC	FACE OF CONCRETE, FACE OF CURB
FOF	FACE OF FINISH
FOM	FACE OF MASONRY
FOS	FACE OF STUDS
FOT	FLAT ON TOP
FPT	FEMALE PIPE THREAD
FR	FRAME
FRP	FIBERGLASS REINFORCED PLASTIC
FRTM	FIRE RETARDANT TREATED MATERIAL
FS	FLOOR SINK, FAR SIDE
FT	FEET, FOOT
FTG	FOOTING, FITTING
FUR	FURRED, FURRING
FURN	FURNITURE, FURNISH
FUT	FUTURE
FV	FACE VELOCITY
FW	FIELD WELD, FIRE WALL
FWD	FORWARD
FWE	FURNISHED WITH EQUIPMENT
FXTR	FIXTURE
G	GRILLE, GROUND, GENERAL (DWG DISCIPLINE)
GA	GAGE (METAL THICKNESS)
GAL	GALLON
GALV	GALVANIZED
GB	GRAB BAR, GRADE BREAK
GC	GROOVED COUPLING
GD	GUARD
GEN	GENERAL
GFCI	GROUND FAULT CIRCUIT INTERRUPTER
GFMU	GROUND FACE MASONRY UNIT
GG	GUTTER GRADE
GJ	GROOVED JOINT
GL	GLASS
GLB	GLASS BLOCK
GND	GROUND
GP	GUY POLE
GR	GRADE
GRTG	GRATING
GSB	GYPSUM SHEATHING BOARD
GT	GREASE TRAP
GVL	GRAVEL
GWB	GYPSUM WALLBOARD
GYP	GYPSUM HARDBOARD
H	HIGH
HB	HOSE BIB
HBD	HARDBOARD
HC	HANDICAPPED, HOLLOW CORE, HORIZONTAL CURVE
HC	HORIZONTAL CENTERLINE
HDR	HEADER
HDSD	HAZEL DELL SEWER DISTRICT
HDW	HARDWARE
HEX	HEXAGONAL
HGR	HANGER
HH	HANDHOLE
HID	HIGH INTENSITY DISCHARGE
HM	HOLLOW METAL
HORIZ	HORIZONTAL
HP	HIGH POINT, HORSEPOWER
HPC	HORIZONTAL POINT OF CURVATURE
HPS	HIGH PRESSURE SODIUM
HPT	HORIZONTAL POINT OF TANGENCY
HR	HOSE REEL, HOUR
HS	HEADED STUD, HIGH STRENGTH
HSS	HOLLOW STRUCTURAL SHAPE
HT	HEIGHT
HTG	HEATING
HV	HIGH VOLTAGE
HVAC	HEATING, VENTILATION & AIR CONDITIONING
HWD	HARDWOOD
HWL	HIGH WATER LEVEL
HYD	HYDRAULIC
HZ	HERTZ, CYCLES PER SECOND
I	INSTRUMENTATION (DWG DISCIPLINE)
ID	INSIDE DIAMETER, INTERIOR DIMENSION
IE	INVERT ELEVATION
IF	INSIDE FACE
IH	INTAKE HOOD
IMP	IMPACT
IN	INCH
INC	INCLUDE, INCANDESCENT
INF	INFLUENT
INSTR	INSTRUMENTATION
INSUL	INSULATION
INT	INTERIOR, INTERSECTION
INTR	INTERMEDIATE, INTERIOR
INV	INVERT
IPS	IRON PIPE SIZE
IPT	INTERNAL PIPE THREAD
IR	INSIDE RADIUS
IRR	IRRIGATION
ISO	ISOMETRIC
JB	JUNCTION BOX
JCT	JUNCTION
JF	JOINT FILLER
JST	JOIST
JT	JOINT
K	KIP
KB	KNEE BRACE
KCMIL	THOUSAND CIRCULAR MILS
KD	KNOCK DOWN
KO	KNOCK OUT
KSI	KIPS PER SQUARE INCH

L	ANGLE, LENGTH, LAVATORY
LAD	LADDER
LAM	LAMINATE
LATL	LATERAL
LB	LAG BOLT, POUND
LCTB	LIQUID CHALK AND TACK BOARD
LDG	LANDING
LDR	LEADER
LE	LIFTING EYE
LF	LINEAR FOOT
LG	LONG
LH	LEFT HAND
LIN	LINEAR
LIQ	LIQUID
LLH	LONG LEG HORIZONTAL
LLV	LONG LEG VERTICAL
LMLU	LIQUID MARKER LECTURE UNIT
LNG	LONGITUDINAL
LOC	LOCATION
LP	LOW POINT
LPS	LOW PRESSURE SODIUM
LR	LONG RADIUS
LT	LEFT
LTD	LIMITED
LTG	LIGHTING
LTL	LINTEL
LTNG	LIGHTNING
LV	LOW VOLTAGE
LVR	LOUVER
LW	LIGHTWEIGHT
LWC	LIGHTWEIGHT CONCRETE
LWL	LOW WATER LEVEL
M	MECHANICAL (DWG DISCIPLINE)
MA	MIXED AIR
MACH	MACHINED
MAINT	MAINTENANCE
MAN	MANUAL
MATL	MATERIAL
MAX	MAXIMUM
MB	MACHINE BOLT
MBR	MEMBER
MC	MECHANICAL CONTRACTOR, MECHANICAL COUPLING
MCB	METAL CORNER BEAD
MCJ	MASONRY CONTROL JOINT
MDMJ	MODIFIED DOUBLE MECHANICAL JOINT
MECH	MECHANICAL
MED	MEDIUM
MFR	MANUFACTURER
MH	MANHOLE, METAL HALIDE
MIN	MINIMUM
MIR	MIRROR
MISC	MISCELLANEOUS
MJ	MECHANICAL JOINT
MLO	MAIN LUGS ONLY
MMB	MEMBRANE
MO	MASONRY OPENING
MOD	MODULAR, MODIFY
MON	MONUMENT
MPT	MALE PIPE THREAD
MRGWB	MOISTURE RESISTANT GYPSUM WALLBOARD
MS	MOP SINK
MSL	MEAN SEA LEVEL
MT	MOUNT
MU	MASONRY UNIT
MULL	MULLION
MV	MEDIUM VOLTAGE
MW	MONITORING WELL
N	NORTH, NEUTRAL
NA	NOT APPLICABLE
NAT	NATURAL
NC	NORMALLY CLOSED
NEG	NEGATIVE
NF	NEAR FACE, NON-FUSED
NIC	NOT IN CONTRACT
NO	NORMALLY OPEN, NUMBER
NOM	NOMINAL
NPS	NOMINAL PIPE SIZE
NPT	NATIONAL PIPE THREAD
NS	NEAR SIDE
NTS	NOT TO SCALE
NWL	NORMAL WATER LEVEL
O TO O	OUT-TO-OUT
OA	OUTSIDE AIR, OVERALL
OC	ON CENTER
OCPD	OVER CURRENT PROTECTION DEVICE
OD	OUTSIDE DIAMETER
OED	OPEN END DUCT
OF	OUTSIDE FACE, OFFICE FURNISHING
OG	ORIGINAL GROUND
OH	OVERHEAD
OPNG	OPENING
OPP	OPPOSITE
OPT	OPTIONAL
OR	OUTSIDE RADIUS
ORD	OVERFLOW ROOF DRAIN
ORIG	ORIGINAL
OVFL	OVERFLOW
OVHG	OVERHANG
OZ	OUNCE
P	PAINT, PROCESS (DWG DISCIPLINE)
PA	PUBLIC ADDRESS
PAR	PARALLEL, PARAPET
PB	PANIC BAR, PULL BOX
PBD	PARTICLE BOARD
PC	POINT OF CURVE, PIECE, PRECAST
PCC	POINT OF COMPOUND CURVATURE
PCF	POUNDS PER CUBIC FOOT
PCT	PERCENT
PE	PLAIN END
PED	PEDESTAL
PEN	PENETRATION
PERF	PERFORATED
PERM	PERMANENT

PERP	PERPENDICULAR
PF	POWER FACTOR
PFMU	PREFACED MASONRY UNIT
PH	PHASE
PI	POINT OF INTERSECTION
PKG	PACKAGE
PL	PLATE, PROPERTY LINE
PLAS	PLASTER
PLAT	PLATFORM
PLBG	PLUMBING
PLF	POUNDS PER LINEAR FOOT
PNEU	PNEUMATIC
POL	POLISH
POS	POSITIVE, POSITION
PP	POLYPROPYLENE, POWER POLE
PRC	POINT OF REVERSE CURVATURE
PREF	PREFINISHED
PREFAB	PREFABRICATED
PRELIM	PRELIMINARY
PREP	PREPARE
PRES	PRESSURE
PRI	PRIMARY
PROP	PROPERTY
PROT	PROTECTION
PS	PIPE SUPPORT
PSF	POUNDS PER SQUARE FOOT
PSI	POUNDS PER SQUARE INCH
PSIA	POUNDS PER SQUARE INCH ABSOLUTE
PSIG	POUNDS PER SQUARE INCH GAGE
PST	PRESTRESSED
PT	POINT, POINT OF TANGENCY
PTN	PARTITION
PVC	POLYVINYL CHLORIDE
PVMT	PAVEMENT
PWD	PLYWOOD
PWJ	PLYWOOD WEB JOIST
PZ	PIEZOMETER
Q	RATE OF FLOW
QT	QUARRY TILE
QTR	QUARTER
QTY	QUANTITY
QUAL	QUALITY
R&R	REMOVE AND REPLACE
R&S	REMOVE AND SALVAGE
R	RADIUS, REGISTER, RISER
RA	RETURN AIR
RB	RESILIENT BASE, ROCK BERM
RCPT	RECEPTACLE
RD	ROOF DRAIN
REC	RECESS
RECD	RECEIVED
RECT	RECTANGULAR
RED	REDUCER
REF	REFERENCE
REINF	REINFORCING
REM	REMOVE
REQD	REQUIRED
RESIL	RESILIENT
RET	RETAINING, RETURN
REV	REVISION, REVERSE
RF	RESILIENT FLOORING
RFG	ROOFING
RFL	REFLECTED, REFLECTOR
RGH	ROUGH
RGS	RIGID GALVANIZED STEEL
RGS-PVC	PVC COATED RGS
RH	RELIEF HOOD, RIGHT HAND, RELATIVE HUMIDITY
RL	REQUIRED LAP
RLFA	RELIEF AIR
RND	ROUND
RNG	RUNNING
RO	ROUGH OPENING
ROW	RIGHT OF WAY
RPM	REVOLUTIONS PER MINUTE
RR	RAILROAD
RSP	ROCK SLOPE PROTECTION
RT	RIGHT
RVT	RESILIENT VINYL TILE
RY	READY
S	SOUTH, SINK, STRUCTURAL (DWG DISCIPLINE)
SA	SUPPLY AIR
SAMU	SOUND ABSORBING MASONRY UNIT
SAN	SANITARY
SB	SPLASH BLOCK
SC	SOLID CORE
SCH	SCHEDULE
SCHEM	SCHEMATIC
SCN	SCREEN
SE	STEEL/ALUMINUM EDGE
SEC	SECONDARY, SECONDS
SECT	SECTION
SEP	SEPARATE
SF	SQUARE FOOT
SG	SHEET GLASS, SEALANT GROOVE
SH	SHOWER
SHT	SHEET
SHTG	SHEATHING
SIL	SILENCE
SIM	SIMILAR
SL	SLOPE
SLTD	SLOTTED
SLV	SLEEVE
SMLS	SEAMLESS
SOG	SLAB ON GRADE
SP	SEWER PIPE
SPA	SPACING
SPEC	SPECIFICATION
SPLY	SUPPLY
SPST	SINGLE POLE SINGLE THROW
SPT	SET POINT
SQ	SQUARE
SR	SHORT RADIUS
SS	SERVICE SINK, SANITARY SEWER
SST	STAINLESS STEEL
ST	STREET
STA	STATION
STD	STANDARD
STIF	STIFFENER
STIR	STIRRUP

STL	STEEL
STOR	STORM
STR	STRUCTURAL, STRAIGHT
SUB	SUBSTITUTE
SUC	SUCTION
SUSP	SUSPENDED
SY	SQUARE YARD
SYM	SYMBOL
SYMM	SYMMETRICAL
SYN	SYNTHETIC
SYS	SYSTEM
T&B	TOP AND BOTTOM
TB	THRUST BLOCK
T&G	TONGUE AND GROOVE
T	TILE, TREAD
TA	TOILET ACCESSORY, TEMPERED AIR
TAN	TANGENT
TBM	TEMPORARY BENCHMARK
TCE	TEMPORARY CONSTRUCTION EASEMENT
TEF	TROWELED EPOXY FLOORING
TEMP	TEMPORARY, TEMPERATURE
THD	THREAD
THK	THICK
THRESH	THRESHOLD
THRU	THROUGH
TKBD	TACK BOARD
TOB	TOP OF BOLT, TOP OF BANK, TOP OF BEAM
TOC	TOP OF CURB, TOP OF CONCRETE
TOD	TOP OF DUCT
TOF	TOP OF FOOTING
TOG	TOP OF GRATING
TOL	TOLERANCE, TOP OF LEDGER
TOM	TOP OF MASONRY
TOP	TOP OF PLATE
TOPO	TOPOGRAPHY
TOS	TOP OF SLAB, TOP OF STEEL
TOW	TOP OF WALL
TP	TOILET PARTITION, TELEPHONE POLE, TOE PLATE, TRAP PRIMER
TPD	TOILET PAPER DISPENSER
TPG	TOPPING
TR	TRANSOM
TRANS	TRANSITION
TRD	TRENCH DRAIN
TYP	TYPICAL
U	URINAL
UG	UNDERGROUND
ULT	ULTIMATE
UNFN	UNFINISHED
UNO	UNLESS NOTED OTHERWISE
UTIL	UTILITY
V	VENT, VELOCITY, VOLT
VA	VOLT AMPERE
VAC	VACUUM
VAR	VARNISH, VARIABLE, VOLT AMPERES REACTIVE
VB	VAPOR BARRIER, VINYL BASE, VALVE BOX
VC	VERTICAL CURVE
VCT	VINYL COMPOSITION TILE, VERTICAL CENTERLINE
VEL	VELOCITY
VENT	VENTILATION
VERT	VERTICAL
VG	VERTICAL GRAIN
VIF	VERIFY IN FIELD
VIN	VINYL
VS	VERSES, VAPOR SEAL
VOL	VOLUME
VPC	VERTICAL POINT OF CURVATURE
VPI	VERTICAL POINT OF INTERSECTION
VPT	VERTICAL POINT OF TANGENCY
VTR	VENT THROUGH ROOF
VWC	VINYL WALL COVERING
W/	WITH
W/O	WITHOUT
W	WATT, WEST, WIDE, WINDOW, WIRE, WIDE FLANGE BEAM
WB	WOOD BASE
WC	WATER CLOSET, WATER COLUMN
WD	WOOD, WIDTH
WF	WIDE FLANGE, WASH FOUNTAIN
WG	WIRE GLASS, WATER GAGE
WH	WALL HYDRANT, WEEP HOLE
WI	WROUGHT IRON
WL	WATER LEVEL
WLD	WELDED
WM	WIRE MESH
WP	WATERPROOF, WORKING POINT
WTHP	WEATHERPROOF
WS	WATERSTOP, WATER SURFACE
WSCT	WAINSCOT
WT	WEIGHT, WATER TIGHT
WWF	WELDED WIRE FABRIC
XP	EXPLOSION PROOF
XS	EXTRA STRONG
XXS	DOUBLE EXTRA STRONG
XSECT	CROSS SECTION
YH	YARD HYDRANT
YS	YIELD STRENGTH

GENERAL NOTES:

1. THESE ABBREVIATIONS APPLY TO THE ENTIRE SET OF CONTRACT DRAWINGS.
2. LISTING OF ABBREVIATIONS DOES NOT IMPLY ALL ABBREVIATIONS ARE USED IN THE CONTRACT DRAWINGS.
3. ABBREVIATIONS SHOWN ON THIS DRAWING INCLUDE VARIATIONS OF THE WORD. FOR EXAMPLE, "MOD" MAY MEAN MODIFY OR MODIFICATION; "INC" MAY MEAN INCLUDED OR INCLUDING; "REINF" MAY MEAN EITHER REINFORCE OR REINFORCING.
4. SCREENING OR SHADING OF WORK IS USED TO INDICATE EXISTING COMPONENTS OR TO DE-EMPHASIZE PROPOSED IMPROVEMENTS TO HIGHLIGHT SELECTED TRADE WORK. REFER TO CONTEXT OF EACH DRAWING FOR USAGE.
5. SEE PROJECT EQUIPMENT AND PIPING SYSTEMS DRAWING FOR SYMBOLS AND ABBREVIATIONS SPECIFIC TO THE PROJECT.

FEDERAL AID # BRM-4231(004)

PHASE2-9873-G03.dwg

CLARK COUNTY WASHINGTON

proud past, promising future

HDR Engineering, Inc.

DESIGN & ENGINEERING DIVISION

DESIGN SECTION

BETTS BRIDGE #26 REPLACEMENT (SALMON CREEK AVE.)

GENERAL ABBREVIATIONS

BYRON GLENN PERRY, STATE OF WASHINGTON, 34831, REGISTERED PROFESSIONAL ENGINEER

EXPIRES: 05/17/06

CALL 48 HOURS BEFORE YOU DIG

1-800-553-4344

"It's the Law"

NORTHWEST UTILITIES NOTIFICATION CENTER

DESIGNED	ECB
DRAWN	BC
CRP	321222
HOR.	NONE
VERT.	N/A
DATE	10/04
DWG:	G-3
SHEET 62	OF 105

GENERAL NOTES:

1. ALL SANITARY SEWER CONSTRUCTION WILL CONFORM TO THE CURRENT ADOPTED STANDARD SPECIFICATIONS OF THE DISTRICT, THE SPECIAL PROVISIONS, AND THE TECHNICAL SPECIFICATIONS ARE AVAILABLE AT THE DISTRICT OFFICE.

2. ALL WORK IN CLARK COUNTY RIGHT-OF-WAY WILL CONFORM TO THE REQUIREMENTS OF THE CLARK COUNTY UTILITY PERMIT OR DISTRICT REQUIREMENTS, WHICHEVER IS MORE RESTRICTIVE.

3. CONTRACTOR SHALL CONTACT THE NW UTILITY NOTIFICATION CENTER AT 1-800-553-4344 AT LEAST TWO (2) WORKING DAYS BEFORE BUT NOT MORE THAN (10) TEN WORKING DAYS BEFORE THE START OF CONSTRUCTION OF THE WORK.

4. A PRECONSTRUCTION CONFERENCE SHALL BE HELD PRIOR TO THE START OF CONSTRUCTION.

5. GRAVITY SANITARY SEWER PIPE MATERIALS FOR LINES SIX (6) INCHES INSIDE DIAMETER AND LARGER SHALL BE:
   A. CLASS 52 DUCTILE IRON PIPE AT DEPTHS OF COVER FROM THREE (3) FEET TO LESS THAN FIVE (5) FEET IN A VEHICLE-TRAVELED AREA; OR
   B. ASTM D 3034 SDR 35 PVC PIPE AT DEPTHS OF COVER OF FIVE (5.0) FEET TO DEPTHS OF TO TWENTY (20.0) FEET; OR
   C. AWWA C-900 OR C-905, CLASS 165 PVC OR CLASS 52 DUCTILE IRON PIPE AT DEPTHS GREATER THAN 20.0'.
6. GRAVITY SANITARY SEWER PIPE MATERIALS FOR LINES FOUR (4) INCHES INSIDE DIAMETER AND SMALLER SHALL BE:
   A. CLASS 52 DUCTILE IRON PIPE AT DEPTHS OF COVER FROM THREE (3) FEET TO LESS THAN FIVE (5) FEET IN A VEHICLE TRAVELED AREA; OR
   B. SCHEDULE 40 ABS OR SCHEDULE 40 SOLVENT JOINT PVC AT DEPTHS OF COVER FROM THREE (3) FEET TO LESS THAN FIVE (5) FEET IN NON-VEHICLE TRAVELED AREAS; OR
   C. SCHEDULE 40 ABS OR SCHEDULE 40 SOLVENT JOINT PVC AT DEPTHS OF COVER OF FIVE (5) FEET OR MORE.

7. BACKFILL FOR ALL SANITARY SEWER PIPE AND SIDE SEWERS SHALL BE AS REQUIRED BY THE CLARK COUNTY UTILITY PERMIT, WSDOT UTILITY FRANCHISE OR THE DISTRICT WHICH EVER IS MORE RESTRICTIVE.

8. BEDDING FOR ALL SANITARY SEWER PIPE AND SIDE SEWERS IN THE PIPE ZONE SHALL BE:
   A. STANDARD SPECIFICATION, SECTION 9-03.15 BEDDING MATERIAL FOR RIGID PIPE FOR CLASS 52 DUCTILE IRON PIPE.
   B. EITHER STANDARD SPECIFICATION, SECTION 9-03.16 BEDDING MATERIAL FOR THERMOPLASTIC PIPE OR STANDARD SPECIFICATION, SECTION 9-03.9(3), CRUSHED SURFACING BASE COURSE, WHEN DEPTH IS FIVE (5) FEET AND LESS THAN THIRTEEN (13) FEET OR PVC PIPE.
   C. STANDARD SPECIFICATIONS, SECTION 9-03.9(3), CRUSHED SURFACING BASE COURSE, WHEN DEPTH IS MORE THAN THIRTEEN (13) FEET FOR PVC PIPE.

9. CONNECTIONS FOR SIDE SEWERS (LATERALS) SHALL BE:
   A. WYES FOR NEW SANITARY SEWERS.
   B. TAPS ON EXISTING LINES INSTALLED BY THE DISTRICT. NOTE: A "REQUEST FOR TAP" FORM MUST BE COMPLETED BY THE CONTRACTOR, FEES PAID, AND A TWO (2) WORKING DAY NOTICE BE GIVEN TO THE DISTRICT SUPERINTENDENT TO ALLOW THE TAP TO BE SCHEDULED.

10. THE ENDS OF SIDE SEWERS (LATERALS) SHALL BE:
    A. BACK-FILLED ONLY AFTER DISTRICT INSPECTION AND APPROVAL AND OWNER'S ENGINEER OR SURVEYOR HAS OBTAINED RECORD DRAWING INFORMATION.
    B. MARKED WITH A 2"X4"X10' WITH A 14 GAUGE INSULATED COPPER WIRE AT A 90° ANGLE FROM THE END OF THE LATERAL. THE MARKER WILL EXTEND AT LEAST THREE (3) FEET ABOVE THE FINISHED GROUND SURFACE. TWO (2) FEET OF EACH END OF THE 2"X4"X10' SHALL BE PAINTED GREEN. IF THE 2"X4" IS NOT TEN (10) FEET LONG, THE CONTRACTOR WILL MARK THE ACTUAL LENGTH ON THE 2"X4".

11. MANHOLES SHALL HAVE ALL JOINTS SEALED WITH WRAPID-SEAL, EASI-WRAP [EIGHT (8) INCH NOMINAL WIDTH], NPC EXTERNAL-SEAL [EIGHT (8) INCH NOMINAL WIDTH], OR APPROVED EQUAL, IF REQUIRED ON THE PLANS.

12. ALL TESTING SHALL BE IN ACCORDANCE WITH THE DISTRICT AMENDMENTS TO THE STANDARD SPECIFICATIONS.
    A. AT THE PRECONSTRUCTION CONFERENCE, THE CONTRACTOR MUST STATE IF THEY INTEND TO USE A PRIVATE TELEVISION INSPECTION SUBCONTRACTOR OR THE DISTRICT.
    B. THE DISTRICT MUST APPROVE ALL PRIVATE TELEVISION INSPECTION SUBCONTRACTORS IN WRITING.
    C. AFTER APPROVAL OF THE CONSTRUCTION BY THE DISTRICT INSPECTOR, THE DISTRICT SUPERINTENDENT REQUIRES A TWO (2) WORKING DAY NOTICE TO SCHEDULE STAFF TO OBSERVE TELEVISION INSPECTION SUBCONTRACTOR'S WORK.

13. CONTRACTOR WILL SUBMIT PRE-PAVING RECORD DRAWINGS PRIOR TO TESTING AND INSPECTION.

14. ALL EXISTING SEPTIC TANKS WILL BE DECOMMISSIONED IN ACCORDANCE WITH SW WASHINGTON HEALTH DISTRICT, UNIFORM PLUMBING CODE, AND DISTRICT REQUIREMENTS.

14. RECORD DRAWINGS WILL BE SUBMITTED TO THE DISTRICT PRIOR TO APPROVAL OF SEWER PERMITS.

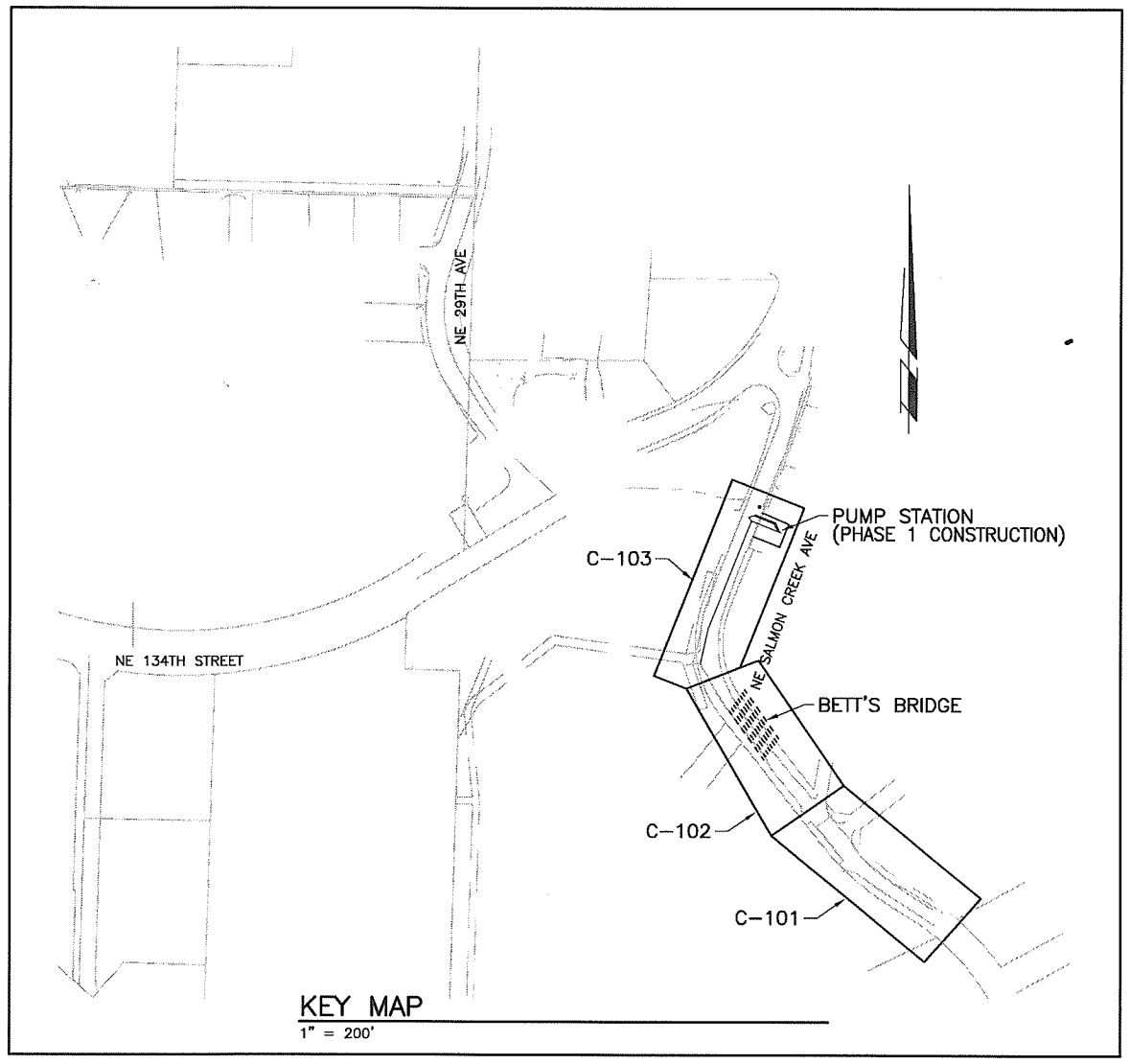

KEY MAP
1" = 200'

FEDERAL AID # BRM-4231(004)

PHASE2-9873-G04.dwg

DESIGNED	ECB
DRAWN	BC
CRP	321222
HOR.	1"=200'
VERT.	N/A
DATE	10/4
DWG:	G-4
SHEET	63 OF 105

CALL 48 HOURS BEFORE YOU DIG
1-800-553-4344
"It's the Law"
NORTHWEST UTILITIES NOTIFICATION CENTER

BYRON GLENN PERRY
STATE OF WASHINGTON
34831
REGISTERED PROFESSIONAL ENGINEER
EXPIRES: 05/17/06

DESIGN & ENGINEERING DIVISION
DESIGN SECTION

BETTS BRIDGE #26 REPLACEMENT (SALMON CREEK AVE.)
GENERAL NOTES AND KEY MAP

HDR Engineering, Inc.

proud past, promising future

CLARK COUNTY
WASHINGTON

FILE: P:\009872\1.0_CAD_Drawings\Dwg\PHASE2-9873-G04.dwg | XREFS: 009872-DESIGN.DWG 009873-SURVEY.dwg 6818ESITE.ROTATED.DWG JD1063_Brk.dwg PHASE2-22345b-052.dwg SGP-WL.dwg LAYOUT.DWG | PLOT DATE: Nov 02, 2004 - 7:47am | USER: sgundy

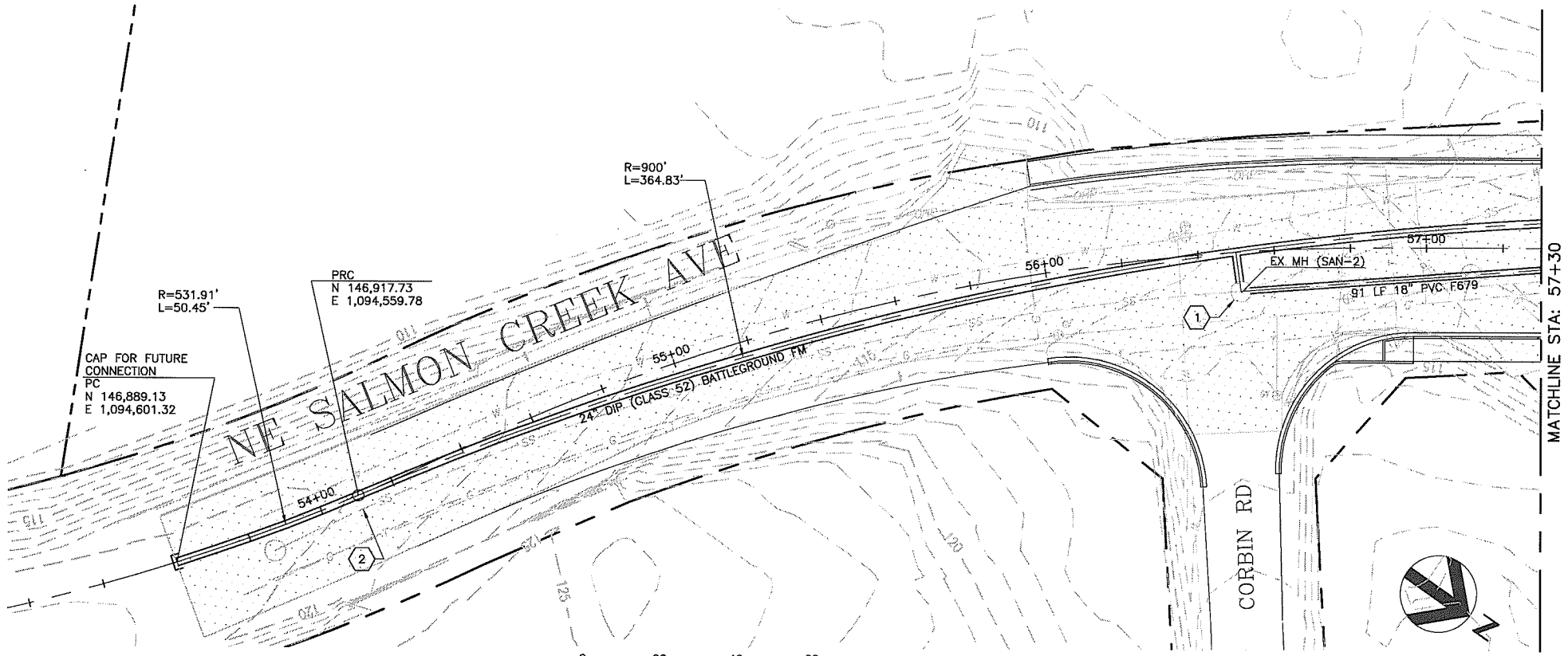

PLAN
1" = 20'

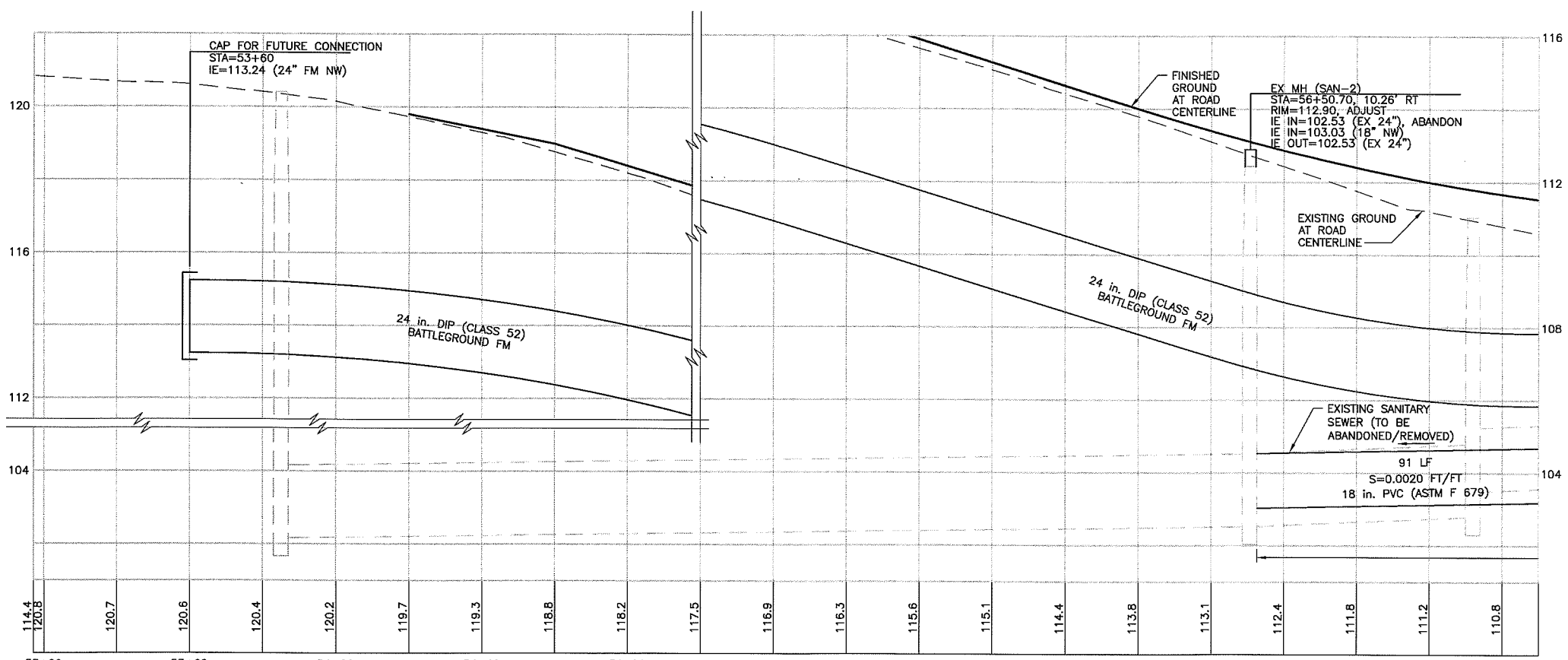

PROFILE
1" = 20' HORZ, 1" = 2' VERT

KEY NOTES:

1. REMOVE EXISTING 24" INLETTING FROM THE NORTH, CONNECT NEW 18" FROM THE NORTH. RESHAPE MANHOLE BOTTOM TO CONFORM WITH NEW FLOWLINE.
2. EXISTING SANITARY GRAVITY SEWER TO BE ABANDONED AND REMOVED FROM EX MH (SAN-2) TO MH-1-1 (PHASE 1). EXISTING SIDE SEWERS ARE TO BE CONNECTED PER HDSD SPECIFICATIONS AND STANDARD DETAIL #10. SEE SHEET C-104.

Structure	Northing	Easting	Comments
EX MH (SAN-13)	146,889.13	1,094,601.32	EXISTING MANHOLE
EX MH (SAN-2)	147,075.90	1,094,383.62	EXISTING MANHOLE, ADJUST RIM TO FG

FEDERAL AID # BRM-4231(004)

PHASE2-9873-C101.dwg

DESIGNED ECB
DRAWN BC
CRP 321222
HOR. 1"=20'
VERT. 1"=2'
DATE 10/04
DWG: C-101
SHEET 64 OF 105

CALL 48 HOURS BEFORE YOU DIG
1-800-553-4344
"It's the Law"
NORTHWEST UTILITIES NOTIFICATION CENTER

BYRON GLENN PERRY
STATE OF WASHINGTON
34831
REGISTERED PROFESSIONAL ENGINEER
EXPIRES: 05/17/06

DESIGN & ENGINEERING DIVISION
DESIGN SECTION

BETTS BRIDGE #26 REPLACEMENT (SALMON CREEK AVE.)
SEWER TRUNK LINE STA 53+20 TO STA 57+30

HDR Engineering, Inc.

proud past, promising future

CLARK COUNTY WASHINGTON

FILE: P:\009872\13.0_CAD_Drawings\Dwg\PHASE2-9873-C101.dwg | XREFS: 009873-DESIGN.dwg 009873-SURVEY.dwg SHADING.DWG JD1063_Brn.dwg PHASE2-2234bdr-052.dwg BGP-WA.dwg LAYOUT.DWG | PLOT DATE: Nov 01, 2004 - 3:48pm | USER: sgundy

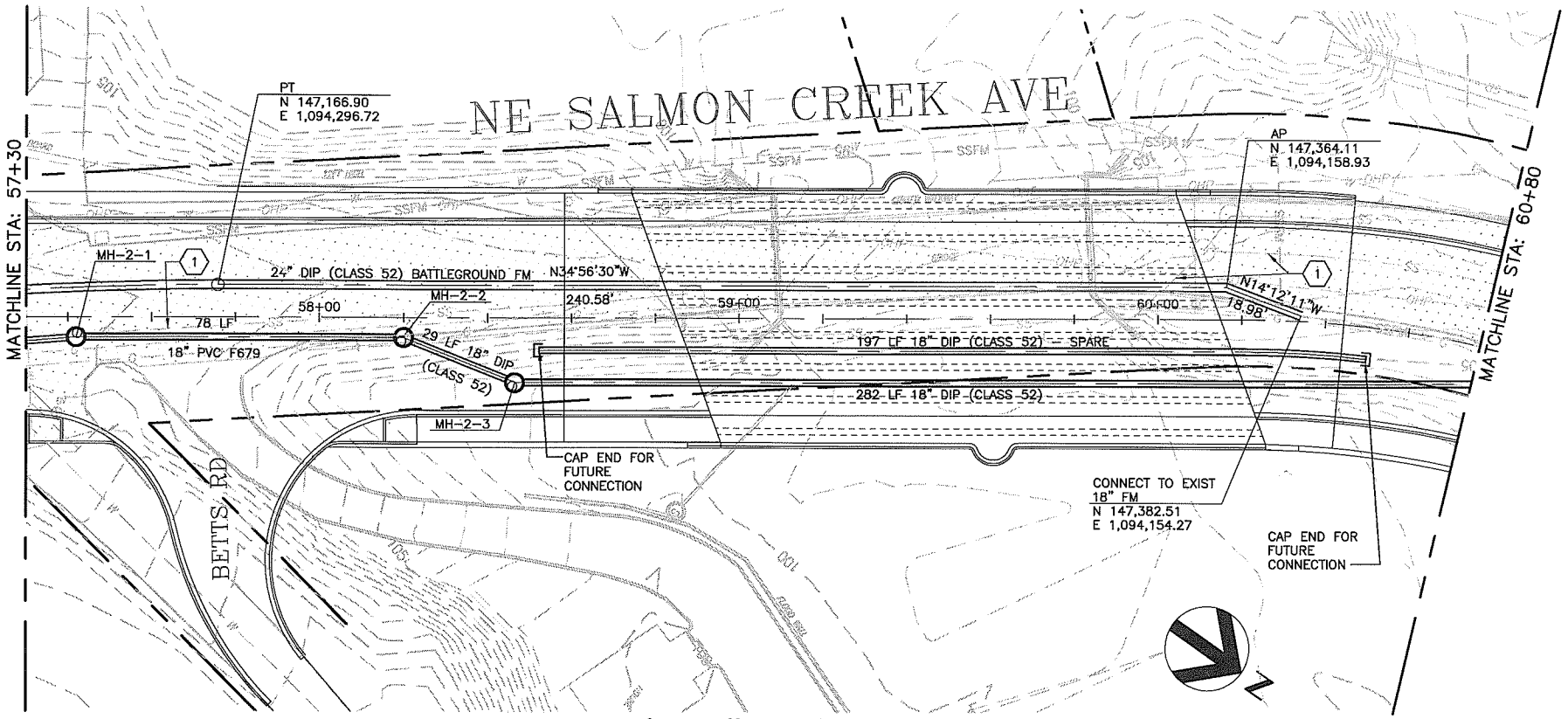

PLAN
1" = 20'

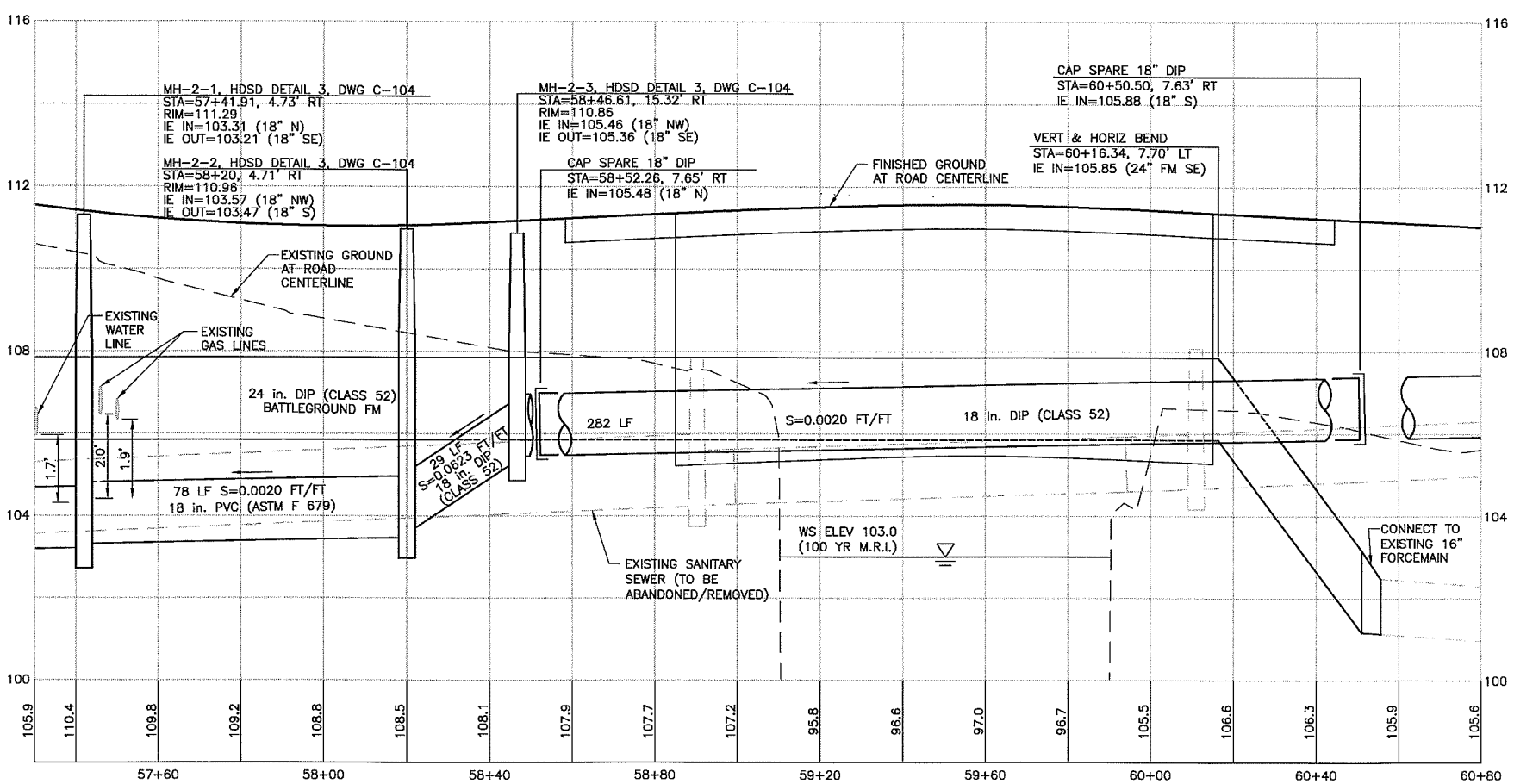

PROFILE
1" = 20' HORZ, 1" = 2' VERT

KEY NOTES:

1. EXISTING SANITARY GRAVITY SEWER TO BE ABANDONED AND REMOVED FROM EX MH (SAN-2) TO MH-1-1 (PHASE 1). EXISTING SIDE SEWERS ARE TO BE CONNECTED PER HDSD SPECIFICATIONS AND STANDARD DETAIL #10. SEE SHEET C-104.

Structure	Northing	Easting	Comments
MH-2-1	147,146.24	1,094,326.25	
MH-2-2	147,210.25	1,094,281.53	
MH-2-3	147,238.01	1,094,275.12	

FEDERAL AID # BRM-4231(004)

PHASE2-9873-C102.dwg

DESIGNED ECB
DRAWN BC
CRP 321222
HOR. 1"=20'
VERT. 1"=2'
DATE 10/04
DWG: C-102
SHEET 65 OF 105

CALL 48 HOURS BEFORE YOU DIG
1-800-553-4344
"It's the Law"
NORTHWEST UTILITIES NOTIFICATION CENTER

BYRON GLENN PERRY
STATE OF WASHINGTON
34831
REGISTERED PROFESSIONAL ENGINEER
EXPIRES: 05/17/06

DESIGN & ENGINEERING DIVISION
DESIGN SECTION

BETTS BRIDGE #26 REPLACEMENT (SALMON CREEK AVE.)
SEWER TRUNK LINE STA 57+30 TO STA 60+80 (SALMON CREEK)

HDR Engineering, Inc.

proud past, promising future

CLARK COUNTY
WASHINGTON

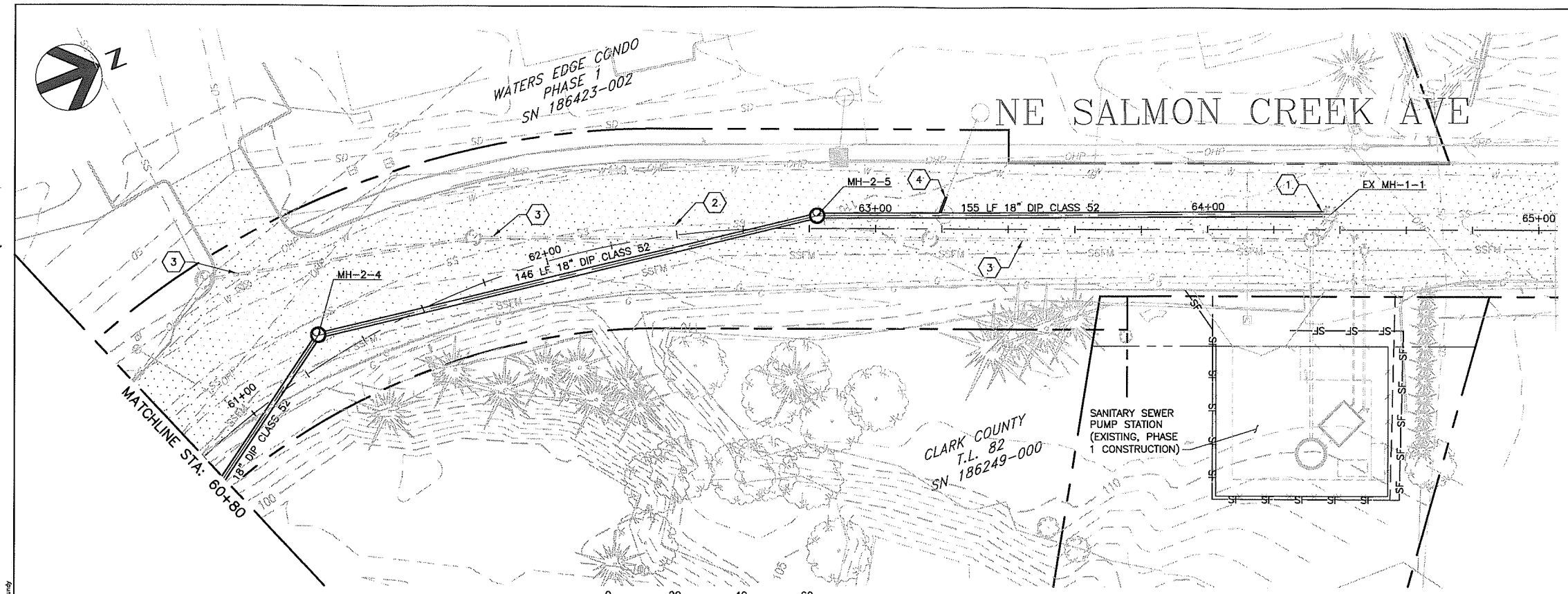

PLAN
1" = 20'

KEY NOTES:

1. REMOVE EXISTING CONNECTION TO 15" SANITARY SEWER. CONNECT NEW 18" SANITARY SEWER.
2. EXISTING SANITARY GRAVITY SEWER TO BE ABANDONED AND REMOVED FROM EX MH (SAN-2) TO MH-1-1 (PHASE 1). EXISTING SIDE SEWERS ARE TO BE CONNECTED PER HDSD SPECIFICATIONS AND STANDARD DETAIL #10. SEE SHEET C-104.
3. EXISTING (PHASE 1) 8" SANITARY SEWER.
4. EXTEND AND CONNECT EXISTING LATERAL, 10 LF 6" DIP (CLASS 52), MATCH EXISTING SLOPE.

Structure	Northing	Easting	Comments
MH-2-4	147,469.65	1,094,113.24	
MH-2-5	147,622.63	1,094,134.94	
EX MH-1-1	147,766.74	1,094,191.26	EXISTNG (PHASE 1 CONSTRUCTION)

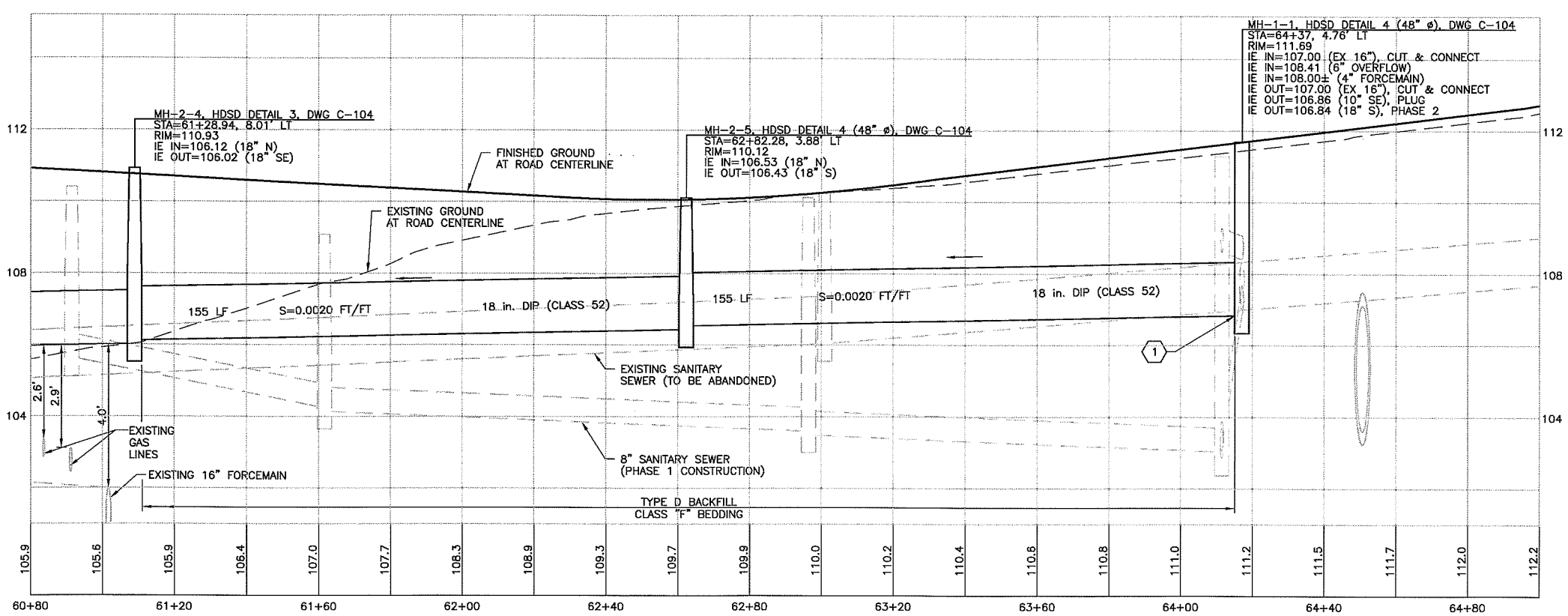

PROFILE
1" = 20' HORZ, 1" = 2' VERT

FEDERAL AID # BRM-4231(004)

PHASE2-9873-C103.dwg

DESIGNED ECB
DRAWN BC
CRP 321222
HOR. 1"=20'
VERT. 1"=2'
DATE 10/04
DWG: C-103
SHEET 66 OF 105

CALL 48 HOURS BEFORE YOU DIG
1-800-553-4344
"It's the Law"
NORTHWEST UTILITIES NOTIFICATION CENTER

BYRON GLENN PERRY
STATE OF WASHINGTON
34831
REGISTERED PROFESSIONAL ENGINEER
EXPIRES: 05/17/06

DESIGN & ENGINEERING DIVISION
DESIGN SECTION

BETTS BRIDGE #26 REPLACEMENT (SALMON CREEK AVE.)
SEWER TRUNK LINE STA 60+80 TO STA 65+00 (SALMON CREEK)

HDR Engineering, Inc.

proud past, promising future

CLARK COUNTY
WASHINGTON

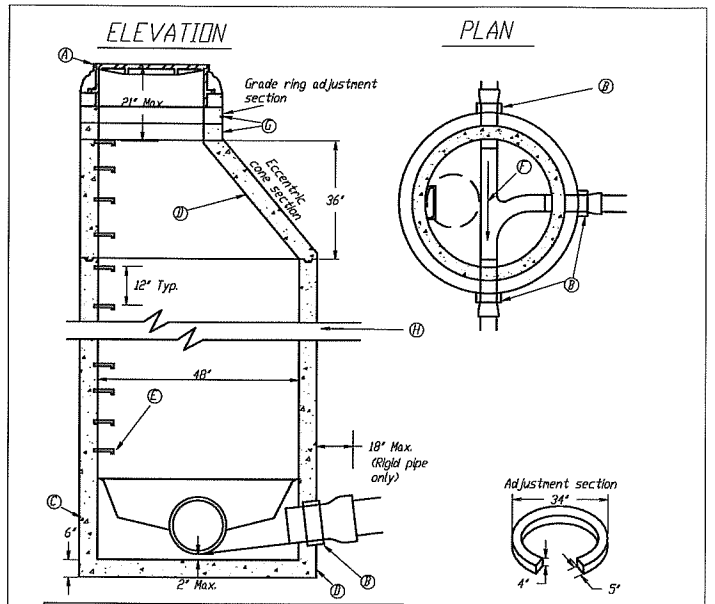

MANHOLE DIMENSION TABLE					
Dia.	Wall thickness	Base thickness	Maximum knockout size	Minimum distance between knockouts	Base reinforcing steel Sq. in/ft each direction
					Integral base
48"	5"	6"	36"	8"	0.15

NOTE: Metal grade ring adjusters not allowed.

Note: Manufacturer shall supply a letter of certification verifying manhole sections meet HDSD specifications.

Ⓐ See standard drawing #7, (standard manhole frames and covers) for details.

Ⓑ All manhole installations shall be cored and booted.

Ⓒ Wall section to be integral part of base and completely water tight.

Ⓓ Base & cone shall be constructed in accordance with AASHTO M-199 (ASTM C478)

Ⓔ Use steps per standard drawing #8.

Ⓕ Slope to be a minimum of 2%.

Ⓖ Steps not allowed in riser ring.

Ⓗ May require sealant.

Approved For Project Use
Revised 5/18/01

HAZEL DELL SEWER DISTRICT

PRECAST MANHOLE

HAZEL DELL SEWER DISTRICT
STANDARD CONSTRUCTION DRAWINGS | 3

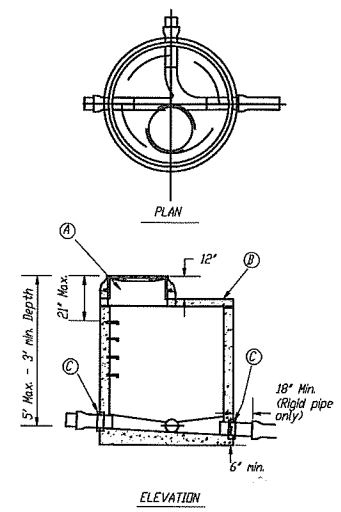

DETAIL

Ⓐ See "Standard Precast manhole" drawing #3 for construction details.

Ⓑ Reinforced precast concrete flat top slab. Minimum H-20 loading.

Ⓒ Boot all penetrations.

NOTE

District will consider written requests allowing casting to be placed directly on the flat top slab.

NOT TO SCALE

Approved For Project Use
Revised 5/18/01

HAZEL DELL SEWER DISTRICT

SHALLOW MANHOLE DETAIL

HAZEL DELL SEWER DISTRICT
STANDARD CONSTRUCTION DRAWINGS | 4

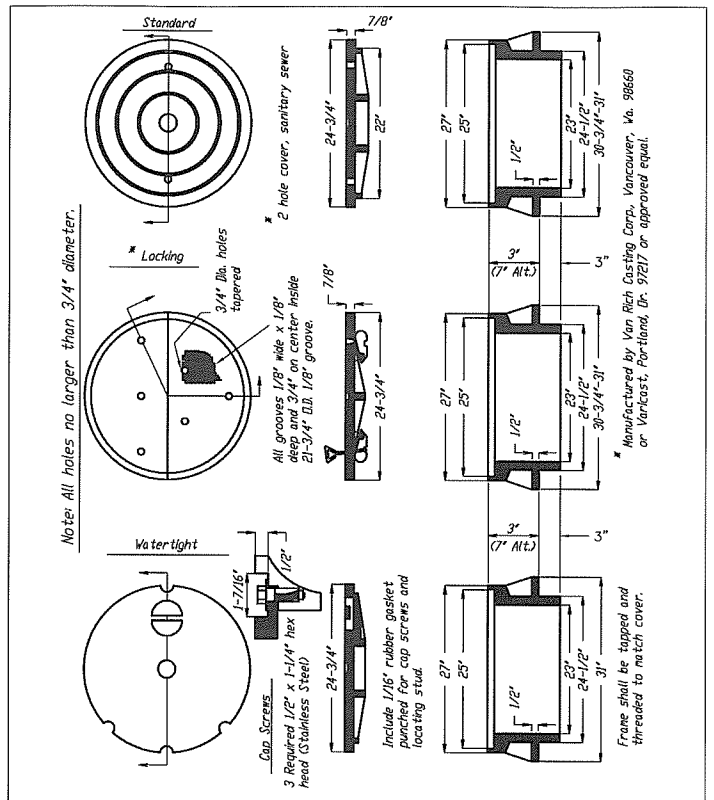

NO SCALE

Approved For Project Use
Revised 6/27/2000

HAZEL DELL SEWER DISTRICT

STANDARD MANHOLE FRAMES AND COVERS

HAZEL DELL SEWER DISTRICT
STANDARD CONSTRUCTION DRAWINGS | 7

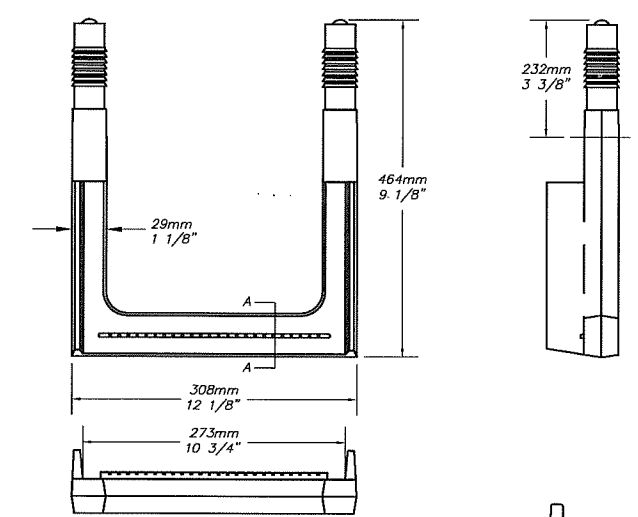

Copolymer Polypropylene Plastic

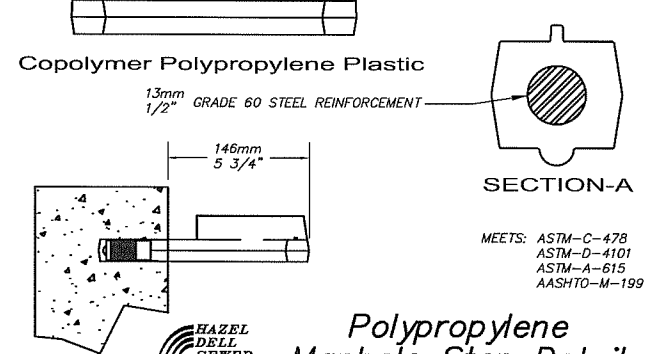

MEETS: ASTM-C-478
ASTM-D-4101
ASTM-A-615
AASHTO-M-199

Revised 10/30/2000

HAZEL DELL SEWER DISTRICT

Polypropylene Manhole Step Detail

HAZEL DELL SEWER DISTRICT
STANDARD CONSTRUCTION DRAWINGS | 8

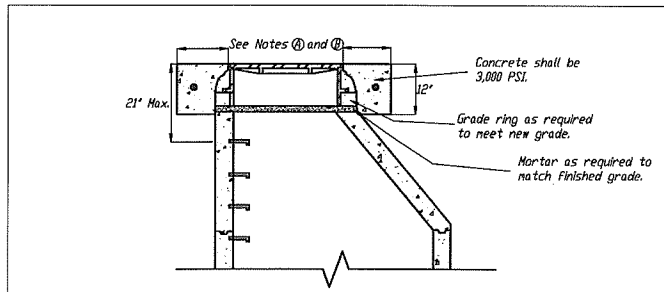

① Steps not allowed in grade rings. If grade rings raise distance to more than 21", a new precast manhole section must be installed below the cone.

② pavement to be sawcut in a diamond shape to raise manhole casting to new finished grade.

③ Metal grade rings are not allowed between frame and cover.

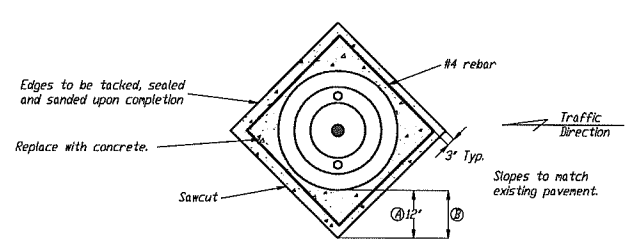

PLAN VIEW

Pattern for pavement cutting to raise manhole casting.

Ⓐ If grade rings can be used.

Ⓑ As needed if precast manhole section is required to raise to grade.

Approved For Project Use
Revised 5/18/01

HAZEL DELL SEWER DISTRICT

MANHOLE ADJUSTMENT

HAZEL DELL SEWER DISTRICT
STANDARD CONSTRUCTION DRAWINGS | 15

FEDERAL AID # BRM-4231(004)

PHASE2-9873-C104.dwg

DESIGNED	ECB
DRAWN	BC
CRP	321222
HOR.	AS SHOWN
VERT.	N/A
DATE	10/04
DWG:	C-104
SHEET	6 7 OF 105

CALL 48 HOURS BEFORE YOU DIG
1-800-553-4344
"It's the Law"
NORTHWEST UTILITIES NOTIFICATION CENTER

GLENN FERRY BYRON STATE OF WASHINGTON 34031 REGISTERED PROFESSIONAL ENGINEER
EXPIRES: 09/17/06

DESIGN & ENGINEERING DIVISION
DESIGN SECTION

BETTS BRIDGE #26 REPLACEMENT (SALMON CREEK AVE.)
MANHOLE DETAILS

HDR Engineering, Inc.

proud past, promising future
CLARK COUNTY WASHINGTON

FILE: P:\009872\13.0_CAD_Drawings\Dwg\PHASE2-9873-C104.dwg | XREFS: PHASE2-2234bdr-c052.dwg BDP-WA.dwg | PLOT DATE: Nov 02, 2004 - 7:25am | USER: sguidy

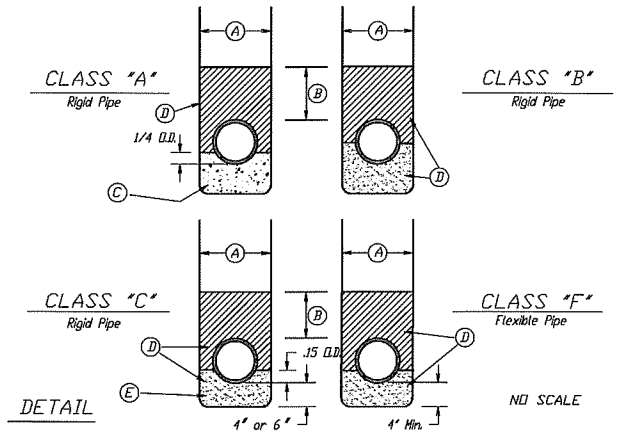

(A) Width of trench shall conform with WSDOT Standard Specifications Section 2-09.4 Measurement, Clark County or WSDOT utility permit (franchise) requirements, whichever is greater.

(B) Pre-cover by hand with selected material and compact to 90% of maximum density by T-99 method to a minimum depth of 12" above top of pipe.

(C) 2,000 PSI concrete. Depth below pipe to be 1/4 I.D. height of pipe width (4" minimum and 12" maximum). To be used only with written approval of the District. See design criteria, C-1.03.04 Specialty Designs for requirements.

(D) For depths of cover from 5' to 13', pipe zone material shall conform to WSDOT Standard Specification, Section 9-03.16 bedding material for thermoplastic pipe or WSDOT Standard Specification, Section 9-03.9(3) crushed surfacing base course.

For depths of cover from 13' to 20', pipezone material shall conform to WSDOT Standard Specification, Section 9-03.9(3) crushed surfacing base course.

(E) Depth of 4"+0.15 O.D. for pipe 8" in diameter and smaller.
Depth of 6"+0.15 O.D. for pipe 10" in diameter and larger.

NOTE: Over excavation shall be backfilled with WSDOT Standard Specification, Section 9-03.9(2) shoulder ballast.

HAZEL DELL SEWER DISTRICT

PIPE BEDDING

Approved For Project Use
Revised 6/27/2000

HAZEL DELL SEWER DISTRICT
STANDARD CONSTRUCTION DRAWINGS

1

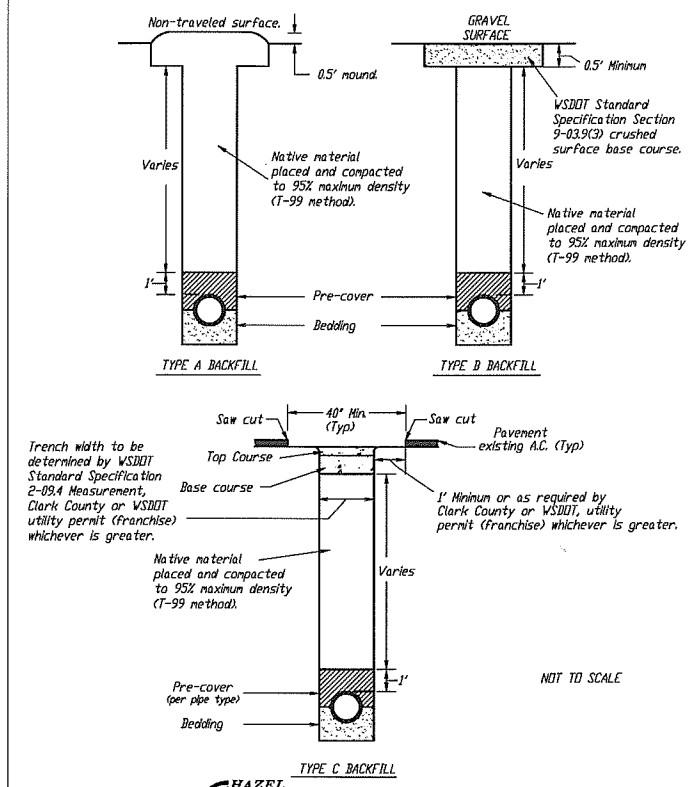

HAZEL DELL SEWER DISTRICT

BACKFILL DETAILS

Approved For Project Use
Revised 6/27/2000

HAZEL DELL SEWER DISTRICT
STANDARD CONSTRUCTION DRAWINGS

2

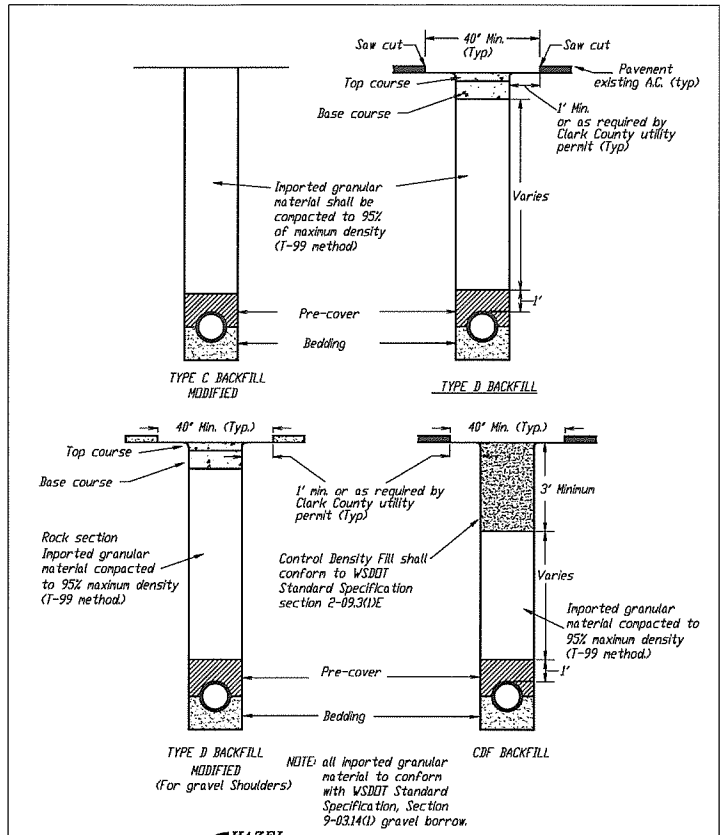

NOTE: all inported granular material to conform with WSDOT Standard Specification, Section 9-03.14(1) gravel borrow.

HAZEL DELL SEWER DISTRICT

BACKFILL DETAILS

Approved For Project Use
Revised 6/27/2000

HAZEL DELL SEWER DISTRICT
STANDARD CONSTRUCTION DRAWINGS

2A

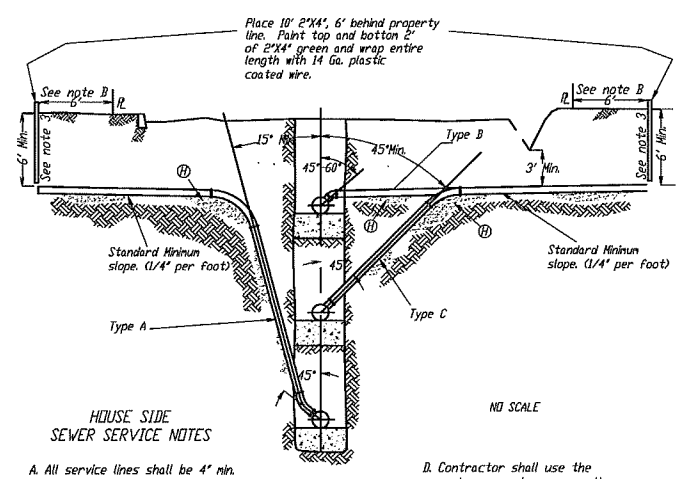

HOUSE SIDE SEWER SERVICE NOTES

A. All service lines shall be 4" min.

B. All service lines shall terminate at the property line, with the exception of new subdivisions, which shall terminate 6' beyond the property line.

C. Depths of service lines at the property line shall be determined as follows:

1) Set to the elevation as noted on plans.

2) When the ground surface at the property line is higher than the edge of pavement, the service elevation shall be a min. of 6' lower than the edge of pavement elevation.

3) When the ground surface elevation at the property line is lower than the edge of pavement the service line shall have minimum 6' of cover at the property line.

4) Place at min. slope of 1/4" per foot (2%) when cover over lateral will be less then 5' (Type B).

D. Contractor shall use the most approp. type connection (A,B or C) as directed by the engineer.

E. All service connections shall be standard WYE branch fittings.

F. Inspection required prior to backfilling of all house services.

G. All house side sewers in traveled areas with less than 5' of cover shall be Class 52 D.I.P.

H. Bedding and backfill to conform with class of bedding and type of backfill specified for sewer line extension.

HAZEL DELL SEWER DISTRICT

TYPICAL HOUSE SIDE SEWER

Approved For Project Use
Revised 5/18/11

HAZEL DELL SEWER DISTRICT
STANDARD CONSTRUCTION DRAWINGS

10

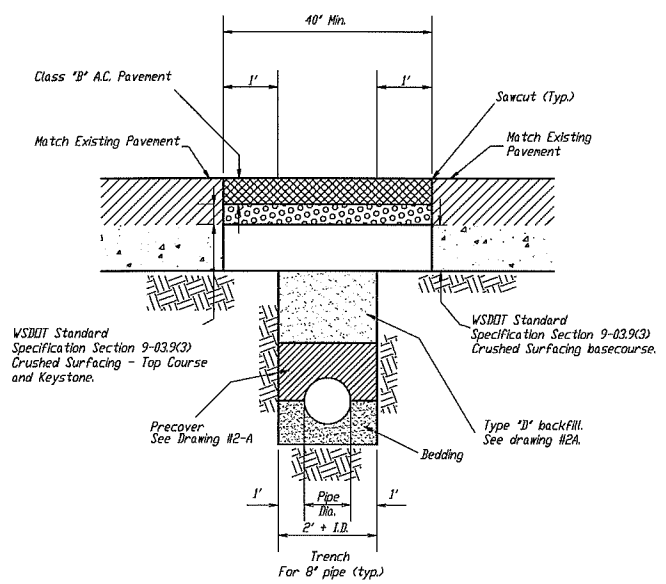

A. Thickness of A.C. pavement and crushed rock to be in conformance with Clark County or WSDOT utility permit.

B. Controlled Density Fill may be required by Clark County Utility Permit.

C. All joints to be tacked, sealed and sanded.

D. A.C. Lifts shall be a minimum of 0.15' and a maximum of 0.35'.

E. All granular materials to be compacted to 95% of maximum density (T-99 Method).

F. See approved plans and standard drawings for pipe zone and backfill requirements.

HAZEL DELL SEWER DISTRICT

PAVEMENT RESTORATION

Approved For Project Use
Revised 6/27/2000

HAZEL DELL SEWER DISTRICT
STANDARD CONSTRUCTION DRAWINGS

14

FEDERAL AID # BRM-4231(004)

PHASE2-9873-C105.dwg

DESIGNED	ECB
DRAWN	BC
CRP	321222
HOR.	AS SHOWN
VERT.	N/A
DATE	10/04
DWG:	C-105
SHEET	68 OF 105

CALL 48 HOURS BEFORE YOU DIG
1-800-553-4344
"It's the Law"
NORTHWEST UTILITIES NOTIFICATION CENTER

GLENN PERRY BYRON STATE OF WASHINGTON 34631 REGISTERED PROFESSIONAL ENGINEER
EXPIRES: 05/17/06

DESIGN & ENGINEERING DIVISION
DESIGN SECTION

BETTS BRIDGE #26 REPLACEMENT (SALMON CREEK AVE.)
TRENCH/PIPELINE DETAILS

HDR Engineering, Inc.

proud past, promising future
CLARK COUNTY WASHINGTON

FILE: P:\093872\13.0_CAD_Drawings\Dwg\PHASE2-9873-C105.dwg | XREFS: PHASE2-2234bsb-002.dwg BGP-HA.dwg | PLOT DATE: Nov 02, 2004 - 7:26am | USER: sgundy

E:\projects\2275_1\Cad\Final\dwg\Prod\2275c01.dwg, 11/09/04 01:49:56 PM, jba

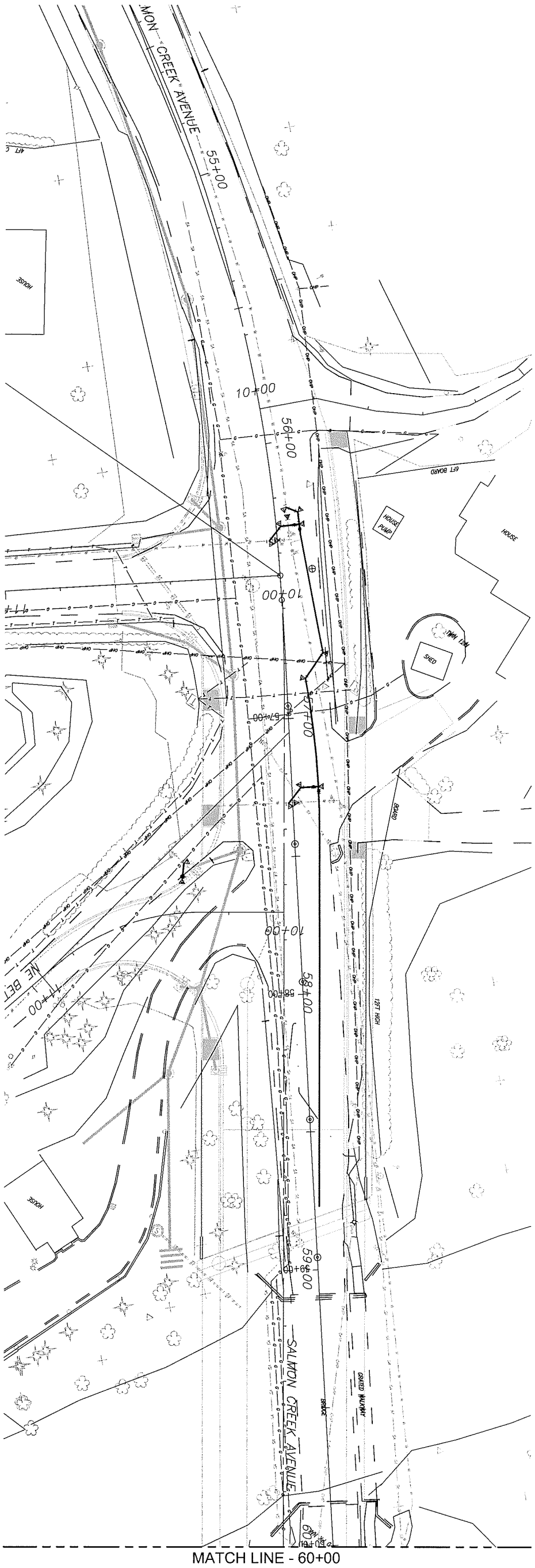

proud past, promising future

CLARK COUNTY
WASHINGTON

DESIGN & ENGINEERING DIVISION
DESIGN SECTION

BETTS BRIDGE
WATER MAIN REPLACEMENT

CALL 48 HOURS BEFORE YOU DIG
1-800-553-4344
"It's the Law"
NORTHWEST UTILITIES NOTIFICATION CENTER

DESIGNED	JBA
DRAWN	JBA
CRP	2275_1
HOR.	1"=20'
VERT.	NA
DATE	OCT 2004
DWG:	22751C01
SHEET	69 OF 105

E:\projects\2275_1\Cad\Final\dwg\Prod\2275c02.dwg, 11/09/04 01:51:07 PM, jba

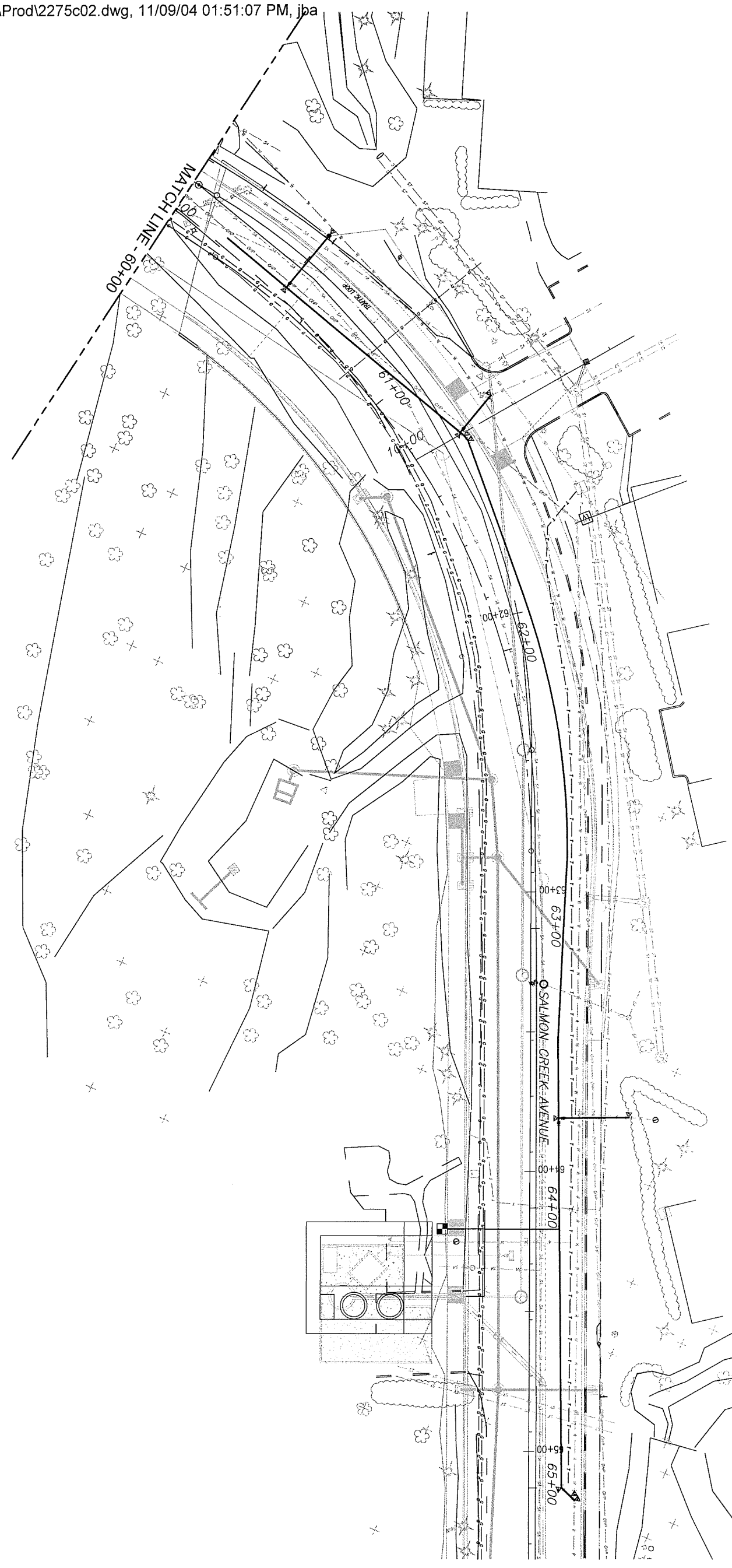

proud past, promising future

CLARK COUNTY
WASHINGTON

DESIGN & ENGINEERING DIVISION
DESIGN SECTION

BETTS BRIDGE
WATER MAIN REPLACEMENT

CALL 48 HOURS BEFORE YOU DIG
1-800-553-4344
"It's the Law"
NORTHWEST UTILITIES NOTIFICATION CENTER

DESIGNED	JBA
DRAWN	JBA
CRP	2275_1
HOR.	1"=20'
VERT.	NA
DATE	OCT 2004
DWG:	22751C01
SHEET	70 OF 105

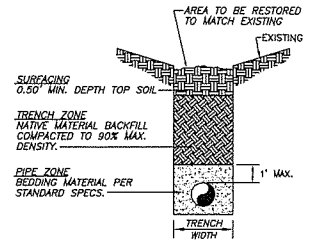

NATIVE BACKFILL
-OUTSIDE ROADWAY PRISM-

(TYPE 'A' RESTORATION)

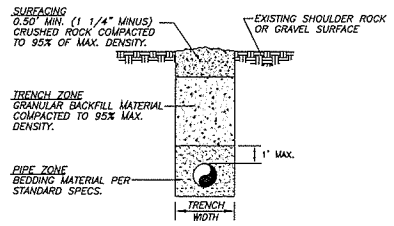

ROADWAY SHOULDERS,
GRAVEL SURFACE

(TYPE 'B' RESTORATION)

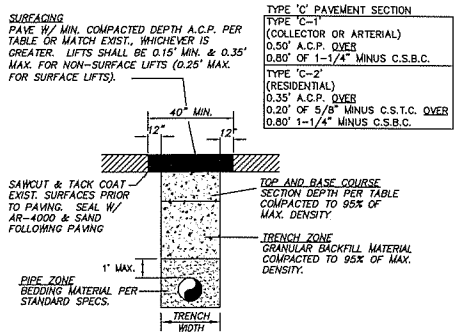

ASPHALT CONCRETE PAVEMENT

(TYPE 'C-1' & 'C-2' RESTORATION)

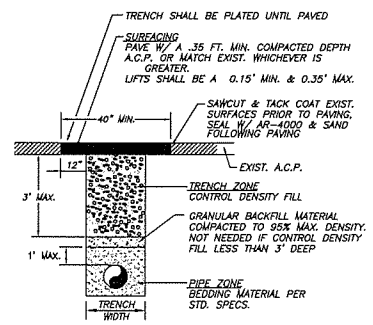

CONTROL DENSITY FILL - A.C.P.

(TYPE 'D' RESTORATION)

TRENCHING NOTES:

1. SEE CLARK COUNTY OR WSDOT UTILITY PERMIT, WHICHEVER IS APPLICABLE, FOR ADDITIONAL TRENCH BACKFILL AND SURFACING REQUIREMENTS.
2. NATIVE MATERIALS MAY BE SUBSTITUTED FOR IMPORTED GRANULAR MATERIAL PROVIDING IT IS PRE-APPROVED BY THE COUNTY ENGINEER OR AUTHORIZED REPRESENTATIVE.
3. TRENCH EXCAVATION, BEDDING, AND BACKFILL FOR WATER MAINS SHALL BE IN ACCORDANCE WITH SECTION 7-10 OF THE MOST CURRENT STANDARD SPECIFICATIONS. BED PIPE PER SECTION 7-10.3(9) OF THE STANDARD SPECIFICATIONS.
4. IN THE TRENCH ZONE, USE METHOD C COMPACTION PER SECTION 2-03.3(14).

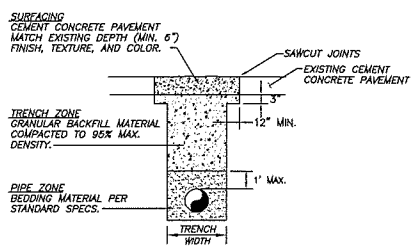

CEMENT CONCRETE PAVEMENT

(TYPE 'E' RESTORATION)

PIPE SIZE	HORIZ. FITTINGS (BENDS)	BEARING AREA (S.F.)	MINIMUM BLOCK (FT.)	VOL. OF BLOCKING (C.Y.)	MIN. LENGTH OF BLOCKING (FT.-IN.)
4"	TEE	1.2	1.0' x 1.0'	0.3	0'-6"
	90°	1.7	1.5' x 1.5'	0.6	0'-6"
	45°	0.9	1.0' x 1.0'	0.3	0'-6"
	22-1/2°	0.5	1.0' x 1.0'	0.3	0'-6"
6"	TEE	2.4	1.5' x 1.5'	0.6	0'-6"
	90°	3.4	2.0' x 2.0'	1.4	0'-8"
	45°	1.9	1.5' x 1.5'	0.6	0'-6"
	22-1/2°	1.0	1.0' x 1.0'	0.3	0'-6"
	11-1/4°	0.5	1.0' x 1.0'	0.3	0'-6"
8"	TEE	4.0	2.0' x 2.0'	1.5	0'-8"
	90°	5.6	2.5' x 2.5'	2.8	0'-10"
	45°	3.1	2.0' x 2.0'	1.5	0'-9"
	22-1/2°	1.6	1.5' x 1.5'	0.7	0'-6"
	11-1/4°	0.8	1.0' x 1.0'	0.3	0'-6"
10"	TEE	6.2	2.5' x 2.5'	3.0	0'-10"
	90°	8.7	3.0' x 3.0'	4.5	1'-0"
	45°	4.8	2.5' x 2.5'	2.5	0'-8"
	22-1/2°	2.5	2.0' x 2.0'	1.4	0'-6"
	11-1/4°	1.3	1.5' x 1.5'	0.8	0'-6"
12"	TEE	8.6	3.0' x 3.0'	5.0	1'-0"
	90°	12.2	3.5' x 3.5'	7.8	1'-3"
	45°	6.6	2.5' x 2.5'	3.0	0'-9"
	22-1/2°	3.4	2.0' x 2.0'	1.5	0'-6"
	11-1/4°	1.7	1.5' x 1.5'	0.8	0'-6"
16"	TEE	15.3	4.0' x 4.0'	12	1'-3"
	90°	21.4	4.5' x 4.5'	17	1'-6"
	45°	11.6	3.5' x 3.5'	7.5	1'-0"
	22-1/2°	5.9	2.5' x 2.5'	2.7	0'-6"
	11-1/4°	3.0	2.0' x 2.0'	1.7	0'-6"
18"	TEE	19.1	4.0' x 4.0'	12	1'-3"
	90°	27.1	5.0' x 5.0'	23	1'-9"
	45°	14.7	4.0' x 4.0'	12	1'-2"
	22-1/2°	7.5	3.0' x 3.0'	4.2	0'-8"
	11-1/4°	3.8	2.0' x 2.0'	1.9	0'-6"
SOIL BEARING = 2000 LB/FT					11/98

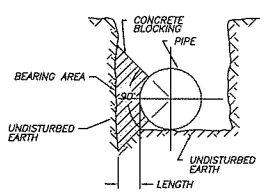

THRUST BLOCK NOTES:

1. POURED BLOCKING SHALL BE POURED IN PLACE WITHOUT DIRECT CONTACT TO THE PIPE OR FITTINGS. SOME PROTECTIVE MATERIAL SUCH AS PLASTIC SHALL BE PLACED BETWEEN THE CONCRETE AND PIPE OR FITTING.
2. POURED BLOCKING SHALL BE POURED AGAINST FIRM UNDISTURBED SOIL.
3. CONCRETE FOR ALL BLOCKING SHALL HAVE A 28-DAY MINIMUM COMPRESSIVE STRENGTH OF 2,500 PSI
4. CONCRETE BLOCKING FOR VERTICAL BENDS SHALL BE PER APWA STD. PLAN NO. 8-22.
5. LAYOUT TO BE APPROVED BY THE CPU INSPECTOR PRIOR TO AND AFTER CONCRETE POUR.

STANDARD THRUST BLOCK

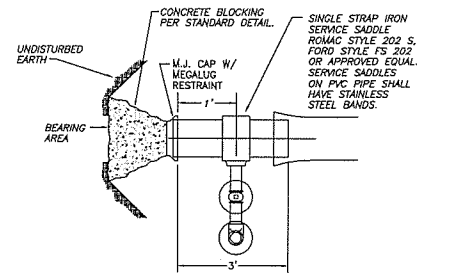

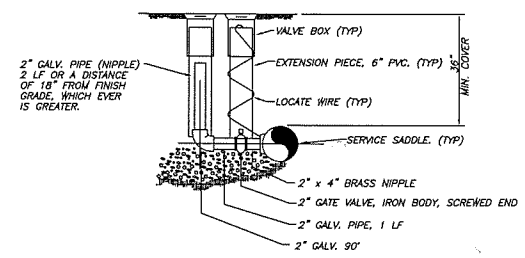

STANDARD BLOW-OFF ASSEMBLY (PERMANENT)

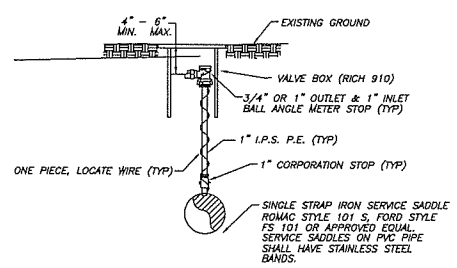

STANDARD MANUAL AIR RELEASE VALVE

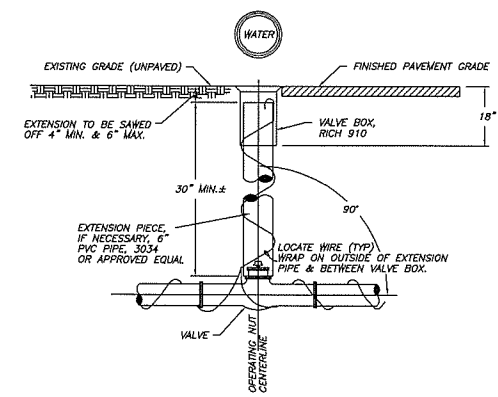

STANDARD VALVE BOX ASSEMBLY

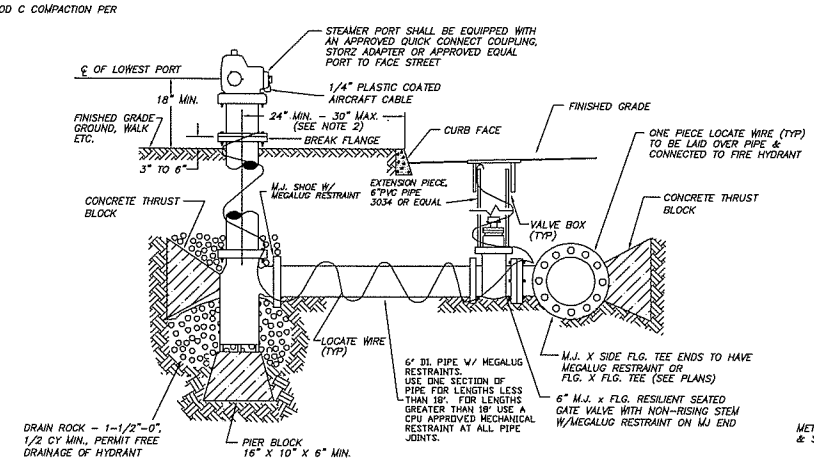

FIRE HYDRANT NOTES:

1. FIRE HYDRANT INSTALLATIONS SHALL BE INSPECTED PRIOR TO BACKFILLING.
2. WHERE HYDRANTS ARE SET BEHIND SIDEWALK, DISTANCE FROM BACK OF SIDEWALK TO HYDRANT C/L SHALL BE 18" MIN., 24" MAX.
3. FIRE HYDRANTS SHALL BE SHOP PAINTED PRIOR TO INSTALLATION W/STANDARD A.W.W.A. GLOSS B. YELLOW

APPROVED HYDRANTS

WATEROUS — WB67-90 AND/OR -250
MUELLER — CENTURION
CLOW — MEDALLION
M&H — 929
KENNEDY — K 81 D

STANDARD FIRE HYDRANT ASSEMBLY

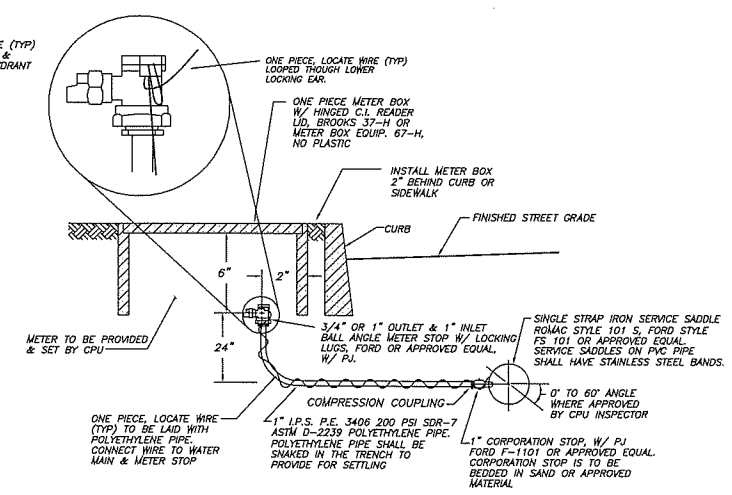

WATER SERVICE & MANUAL AIR RELEASE NOTES:

1. NO CONNECTIONS WILL BE ALLOWED TO AN EXISTING SERVICE PRIOR TO AN APPROVED PURITY TEST. PURITY TEST SHALL PRECEDE PRESSURE TEST.
2. STUB SERVICES SHALL BE PRESSURE TESTED WITH THE MAIN LINE AND BE CAPABLE OF WITH-STANDING THE MAINS TEST PRESSURE.
3. ALL COMPRESSION FITTINGS TO HAVE STAINLESS STEEL INSERTS.

STANDARD 3/4" & 1" WATER SERVICE

EROSION CONTROL NOTES:

1. CONSTRUCTION EROSION CONTROL SHALL BE AS REQUIRED AND CONFORMING WITH THE CLARK COUNTY DRAINAGE AND EROSION CONTROL ORDINANCE. REFER TO THE CLARK COUNTY DEPARTMENT OF PUBLIC WORKS STANDARD EROSION CONTROL DETAILS.
2. ALL EXPOSED SOILS SHALL BE STABILIZED, IN A TIMELY MANNER, BY THE APPLICATION OF BEST MANAGEMENT PRACTICES, INCLUDING BUT NOT LIMITED TO SOD, SEED, OR OTHER VEGETATION, PLASTIC COVERINGS, MULCHING, OR APPLICATION OF CRUSHED AGGREGATE ON THOSE AREAS TO BE PAVED.
3. WHEN EXCAVATION OCCURS IN ROADSIDE DITCHES, EXCAVATE AND KEY INTO DITCH ONE BIOFILTER BAG CHECK DAM PER 100' OF DITCH, OR WHERE NOTED ON THE PLANS. REMOVE SILT WHEN IT IS EVEN WITH THE TOP OF THE CHECK DAM. REPLACE OR ADD BIOFILTER BAGS AS NECESSARY TO PROPERLY FILTER THE STORM WATER.
4. INSTALL BIOFILTER BAGS (POLYESTER FABRIC PILLOW (ASTM-D191 OR EQUAL)FILLED W/ 15-16 LBS. OF WOOD CHIPS) AT EACH INLET. REMOVE SILT AND ADD BIOFILTER BAGS AS NECESSARY TO PROPERLY FILTER STORM WATER.
5. IF SEDIMENT IS TRANSPORTED ONTO THE ROAD SURFACE, THE ROADS SHALL BE CLEANED THOROUGHLY AT THE END OF THE WORKDAY, OR MORE IF NECESSARY. SIGNIFICANT SOIL DEPOSITS SHALL BE REMOVED FROM THE ROAD BY SHOVELING OR SWEEPING.
6. THE LENGTH OF THE TRENCH OPEN AT ONE TIME SHALL BE MINIMIZED AND WHERE CONSISTENT WITH SAFETY AND SPACE CONSIDERATION, EXCAVATED MATERIALS SHALL BE PLACED ON THE UPHILL SIDE OF THE TRENCH.

GENERAL NOTES:

1. ALL CONSTRUCTION MATERIALS AND WORKMANSHIP SHALL CONFORM TO THE CLARK PUBLIC UTILITIES (CPU) WATER CONSTRUCTION SPECIFICATIONS, STANDARD DETAILS AND THE 2002 EDITION OF THE "STANDARD SPECIFICATIONS FOR ROAD AND BRIDGE CONSTRUCTION" PUBLISHED BY WASHINGTON STATE DEPARTMENT OF TRANSPORTATION (WSDOT).
2. A CPU WATER UTILITY INSPECTOR SHALL BE AT THE JOB SITE DURING CONSTRUCTION OF ALL WATER FACILITIES. CONTACT 360-992-8019 TWO WORKING DAYS PRIOR TO COMMENCING WORK.
3. WORK WITHIN COUNTY RIGHT-OF-WAY SHALL CONFORM WITH CLARK COUNTY PUBLIC WORKS UTILITY PERMIT REQUIREMENTS AND DETAILS. WORK WITHIN STATE RIGHT-OF-WAY SHALL CONFORM TO WSDOT UTILITY PERMIT REQUIREMENTS AND DETAILS.
4. WATER MAIN SHALL BE PVC C-900 P.C. 150 OR AS SPECIFIED ON PLANS.
5. VALVE SHALL BE 2" SQUARE OPERATING NUT OR AS SPECIFIED ON PLANS.
6. INSTALL WATER MAIN WITH 3.0 FEET OF MINIMUM COVER UNLESS OTHERWISE NOTED. DEPTH MAY INCREASE AT UTILITY AND CULVERT CROSSINGS. REFER TO NOTE 13.
7. THE LOCATION OF THE UTILITIES SHALL BE VERIFIED IN ADVANCE TO ALLOW FOR ALIGNMENT ADJUSTMENTS. CALL UTILITY LOCATES TWO (2) WORKING DAYS PRIOR TO CONSTRUCTION (1-800-553-4344).
8. A TAPPING COMPANY APPROVED BY CLARK PUBLIC UTILITIES SHALL BE USED TO MAKE ALL TAPS.
9. LOCATE WIRE SHALL BE NON-COATED, NO. 14 GA. SOFT DRAWN SOLID COPPER.
10. DRY CALCIUM HYPO CHLORIDE IN TABLET FORM, FAST DISSOLVING, WITH 65% MIN. AVAILABLE CHLORINE SHALL BE USED TO CHLORINATE ALL NEW MAINS. THE NUMBER OF TABLETS TO BE APPLIED PER 20 FOOT LENGTH OF PIPE SHALL BE AS FOLLOWS:

PIPE SIZE	NUMBER OF TABLETS
4"	2
6"	3
8"	4
10"	6
12"	8

11. ACTUAL ROAD ALIGNMENTS MAY VARY FROM RIGHT-OF-WAY INDICATED. THE CONTRACTOR SHALL VERIFY THE PROPOSED PIPE ALIGNMENT AND REPORT DIFFERENCES TO THE CPU INSPECTOR. ALL ALIGNMENT CHANGES MUST BE APPROVED BY THE CPU INSPECTOR PRIOR TO INSTALLATION.
12. DRIVEWAYS DISTURBED BY CONSTRUCTION SHALL BE RESTORED BY THE CONTRACTOR TO "LIKE" OR BETTER CONDITION. REFER TO PLAN FOR APPROXIMATE LOCATIONS AND TYPES.
13. CONTRACTOR SHALL VERIFY EXISTING UTILITY CULVERTS, CONDUITS AND LINE LOCATION PRIOR TO CONSTRUCTION. DUE TO FIELD CONDITIONS, THE CONTRACTOR SHALL FIELD ADJUST THE VERTICAL AND HORIZONTAL ALIGNMENT OF THE WATER MAIN TO CLEAR THE UTILITY IN CONFLICT AND PROVIDE THE MIN. 3.0 FEET OF COVER AS APPROVED BY THE CPU INSPECTOR. ALL CULVERTS WHICH ARE DISTURBED BY CONSTRUCTION SHALL BE RESTORED BY THE CONTRACTOR IN ACCORDANCE WITH THE SPECIFICATIONS.
14. FENCES DISTURBED BY CONSTRUCTION SHALL BE RESTORED BY THE CONTRACTOR TO "LIKE" OR BETTER CONDITION.
15. CONTRACTOR SHALL VERIFY EXISTING SIGN AND MAILBOX LOCATIONS PRIOR TO CONSTRUCTION. SIGNS & MAILBOXES THAT ARE DISTURBED BY CONSTRUCTION SHALL BE RELOCATED BACK FROM EDGE OF PAVEMENT, 1.0 FEET CLEAR OF WATER MAIN. ANY SIGNS OR MAILBOXES DAMAGED SHALL BE REPAIRED OR REPLACED AS PER THE SPECIFICATIONS.
16. WHENEVER A PIPE IS CUT AND NOT RECONNECTED, THE CUT ENDS SHALL BE CAPPED OR PLUGGED, AS DIRECTED BY THE CPU INSPECTOR.
17. ALL WATER SERVICES, BLOW-OFF ASSEMBLIES, AIR RELEASE VALVES, FIRE HYDRANT ASSEMBLIES, VALVE BOXES AND THRUST BLOCKING SHALL BE INSTALLED PER THE STANDARD SPECIFICATIONS AND DETAILS.
18. THE LOCATIONS OF ALL EXISTING UTILITIES ARE FOR INFORMATIONAL PURPOSES ONLY. MANY LOCATIONS ARE PER SCHEMATIC RECORD DRAWINGS. THE CURRENT AND EXACT LOCATIONS OF FACILITIES MUST BE VERIFIED PRIOR TO CONSTRUCTION. THE CONTRACTOR PERFORMING THE WORK SHALL COMPLY WITH THE PROVISIONS OF FACILITIES AT LEAST 48 BUSINESS DAY HOURS PRIOR TO EXCAVATION. CALL 1-800-553-4344 FOR UTILITY LOCATE SERVICE.
19. WATER MAINS BEING INSTALLED NEAR TELEPHONE/CABLE COMMUNICATIONS SHALL HAVE A MINIMUM 12" HORIZONTAL AND 6" VERTICAL CLEARANCE.
20. WATER MAINS BEING INSTALLED NEAR UNDERGROUND POWERLINES SHALL HAVE A MINIMUM 12" HORIZONTAL AND 6" VERTICAL CLEARANCE.
21. REQUIRED SEPARATION BETWEEN WATER LINES AND SANITARY SEWER LINES SHALL BE AS FOLLOWS:

HORIZONTAL SEPARATIONS (PARALLEL)
A MINIMUM SEPARATION OF TEN (10) FEET (MEASURED EDGE TO EDGE) BETWEEN SANITARY SEWER LINES AND WATER LINES SHALL BE MAINTAINED WHENEVER POSSIBLE. WHEN CONDITIONS PREVENT THE MINIMUM TEN (10) FOOT HORIZONTAL SEPARATION THE ENGINEER SHALL BE NOTIFIED.

VERTICAL SEPARATION (PERPENDICULAR)
WATER LINES CROSSING SANITARY SEWER LINES SHALL BE LAID ABOVE THE SEWER LINES TO PROVIDE A SEPARATION OF AT LEAST 18" BETWEEN THE INVERT OF THE WATER PIPE AND THE CROWN OF THE SANITARY SEWER PIPE. A LENGTH OF WATER PIPE SHALL BE CENTERED AT THE POINT OF CROSSING AND SHALL BE THE LONGEST STANDARD LENGTH AVAILABLE FROM THE MANUFACTURER.

CLARK PUBLIC UTILITIES
WATER MAIN INSTALLATION
STANDARD DETAILS

DESIGN BY:	SCALE: N.T.S.
APR'D BY: E.B.	CAD FILE: Std-det20030527
DRAWN BY: D. WALKER	REVISED: 8/18/03
DATE: 1-19-00	W.O. #

DESIGNED	JBA
DRAWN	JBA
CRP	2275_1
HOR.	NA
VERT.	NA
DATE	OCT 2004
DWG.	22751C01
SHEET	71 OF 105

CALL 48 HOURS BEFORE YOU DIG 1-800-553-4344 "It's the Law" NORTHWEST UTILITIES NOTIFICATION CENTER

DESIGN & ENGINEERING DIVISION
DESIGN SECTION

BETTS BRIDGE
WATER MAIN REPLACEMENT DETAILS

proud past, promising future
CLARK COUNTY WASHINGTON

E:\projects\2275_1\Cad\Final\dwg\Prod\2275c03.dwg, 11/09/04 01:51:37 PM, jba

CURVE DATA					
P.I. STATION	DELTA	RADIUS	TANGENT	LENGTH	BK. TAN. BRG.
61+58.22	56°36'24" RT.	254.00	136.78	408.16	N 34°56'03" W

SEC. 25, T3N., R1E., W.M.
CLARK COUNTY

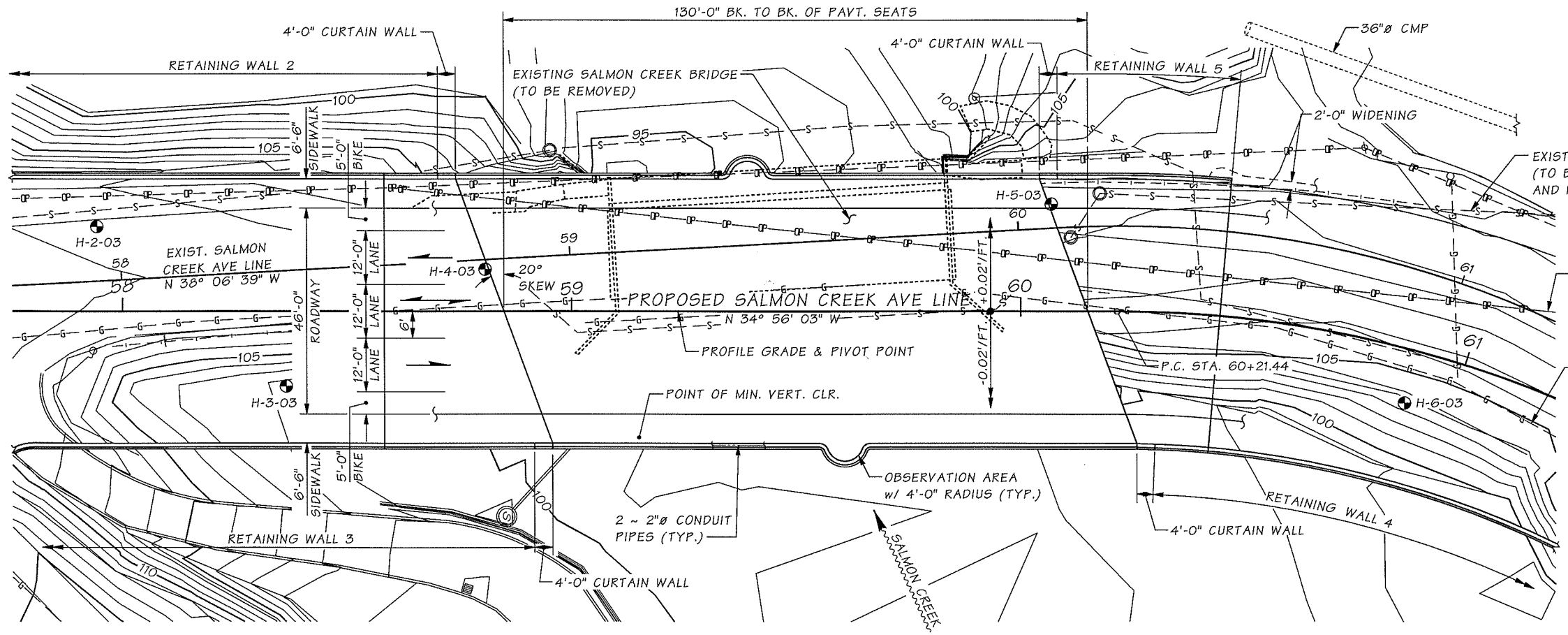

PLAN

BEARING OF ALL PIERS IS N 35°03' 57" E

SALMON CREEK AVE LINE PROFILE

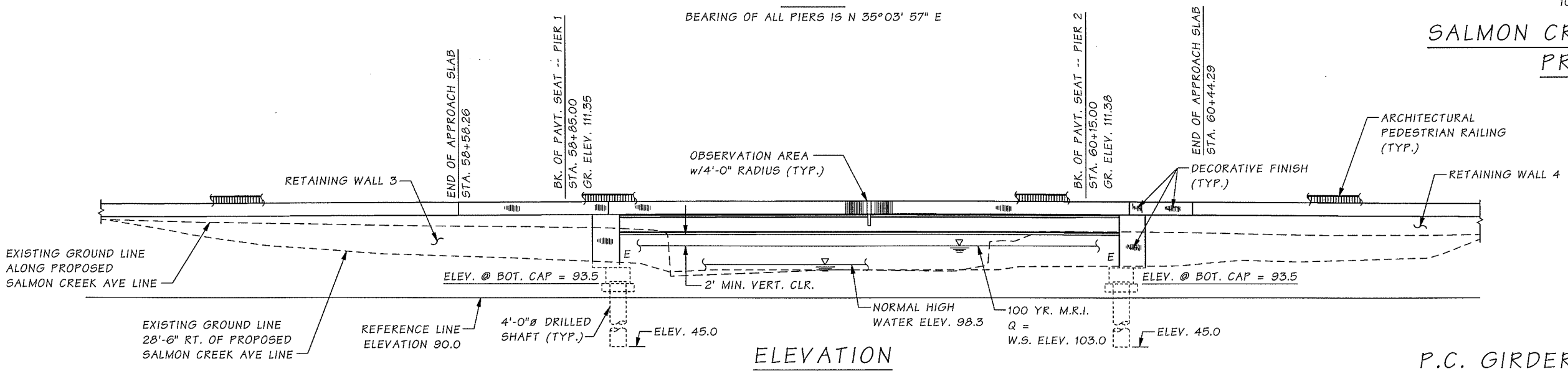

ELEVATION

GRADE ELEVATIONS SHOWN ARE FINISH GRADES AT TOP OF ROADWAY ON PROPOSED SALMON CREEK AVE LINE AND ARE EQUAL TO PROFILE GRADE. SEE STD. PLAN H-9 FOR EMBANKMENT DETAILS AT BRIDGE ENDS.

DATUM

N.A.V.D. OF 1988

P.C. GIRDERS (WF58G)
LOADING: HL-93

SR 999 JOB NO. ____ SHEET 1 ____

Bridge Design Engr.	Kapur, J		M:\Y-Team\Clark County Betts Bridge\window files\LAYOUT.WND
Supervisor	Kapur, J		
Designed By	MINNS, GEC	11/04	
Checked By	Mizumori, A	11/04	
Detailed By	Evans, P.D.	11/04	
Bridge Projects Engr.	Kirker, KN		
Prelim. Plan By	Nebergall, D		
Architect/Specialist			

DATE	REVISION	BY	APP'D

REGION NO.	STATE	FED. AID PROJ. NO.	SHEET NO.	TOTAL SHEETS
10	WASH.	BRM-4231(004)		
JOB NUMBER				

BRIDGE AND STRUCTURES OFFICE

JEROME A. WEIGEL — STATE OF WASHINGTON — 14740 — REGISTERED PROFESSIONAL ENGINEER — EXPIRES 6/29/06

Washington State Department of Transportation

SALMON CREEK AVENUE
BETTS BRIDGE REPLACEMENT

LAYOUT

BRIDGE SHEET NO. 1

SHEET 72 OF 105 SHEETS

Thu Nov 04 15:44:01 2004

GENERAL NOTES

1. ALL MATERIAL AND WORKMANSHIP SHALL BE IN ACCORDANCE WITH THE REQUIREMENTS OF THE WASHINGTON STATE DEPARTMENT OF TRANSPORTATION STANDARD SPECIFICATIONS FOR ROAD, BRIDGE AND MUNICIPAL CONSTRUCTION-ENGLISH DATED 2004 AND AMENDMENTS.

2. THIS STRUCTURE HAS BEEN DESIGNED IN ACCORDANCE WITH THE REQUIREMENTS OF THE AASHTO LRFD BRIDGE DESIGN SPECIFICATIONS THIRD EDITION-2004. SESIMIC DESIGN OF THIS STRUCTURE HAS BEEN COMPLETED USING AN ACCELERATION COEFFICIENT OF 0.20 AND SOIL PROFILE TYPE I.

3. THE CONCRETE IN THE ROADWAY DECK SHALL BE CLASS 4000D. THE CONCRETE IN THE SEALS SHALL BE CLASS 4000W. THE CONCRETE IN THE SHAFTS SHALL BE CLASS 4000P. ALL OTHER CAST-IN-PLACE CONCRETE SHALL BE CLASS 4000.

4. THE NOMINAL SHAFT CAPACITY SHALL BE TAKEN AS, IN KIPS:

SERVICE - I LIMIT STATE		
PIER NO.	SKIN FRICTION CAPACITY	END BEARING CAPACITY
1	800	240
2	800	240

STRENGTH LIMIT STATE		
PIER NO.	SKIN FRICTION CAPACITY	END BEARING CAPACITY
1	760	370
2	760	370

EXTREME EVENT - I LIMIT STATE		
PIER NO.	SKIN FRICTION CAPACITY	END BEARING CAPACITY
1	1170	750
2	1170	750

5. THE BACKFILL BEHIND THE ABUTMENTS MAY BE PLACED PRIOR TO PLACEMENT OF THE SUPERSTRUCTURE.

6. UNLESS OTHERWISE SHOWN ON THE PLANS, THE CONCRETE COVER MEASURED FROM THE FACE OF THE CONCRETE TO THE FACE OF ANY REINFORCING STEEL SHALL BE 2½" AT THE TOP OF THE ROADWAY SLAB, 1" AT THE BOTTOM OF THE ROADWAY SLAB (AND AT TOP & BOTTOM OF BOTTOM SLAB), 2" AT THE TOP OF FOOTINGS, 3" AT THE BOTTOM OF FOOTING, AND 1½" AT ALL OTHER LOCATIONS.

7. THE CONDUITS, JUNCTION BOXES, AND UTILITIES ARE SHOWN FOR REFERENCE ONLY. THE CONTRACTOR SHALL COORDINATE THESE PLANS WITH THE ELECTRICAL, I.T.S. AND OTHER CIVIL PLANS.

8. THE CONCRETE SEALS AT PIERS 1 & 2 ARE DESIGNED FOR A WATER SURFACE ELEVATION OF 98.3. THE SEALS HAVE BEEN DESIGNED ASSUMING THE HYDROSTATIC PRESSURE UPLIFT FORCE IS RESISTED BY THE WEIGHT OF THE SEAL AND ADHESION OF THE SEAL TO THE CASING OF 10 PSI AFTER SEALS ARE PLACED.

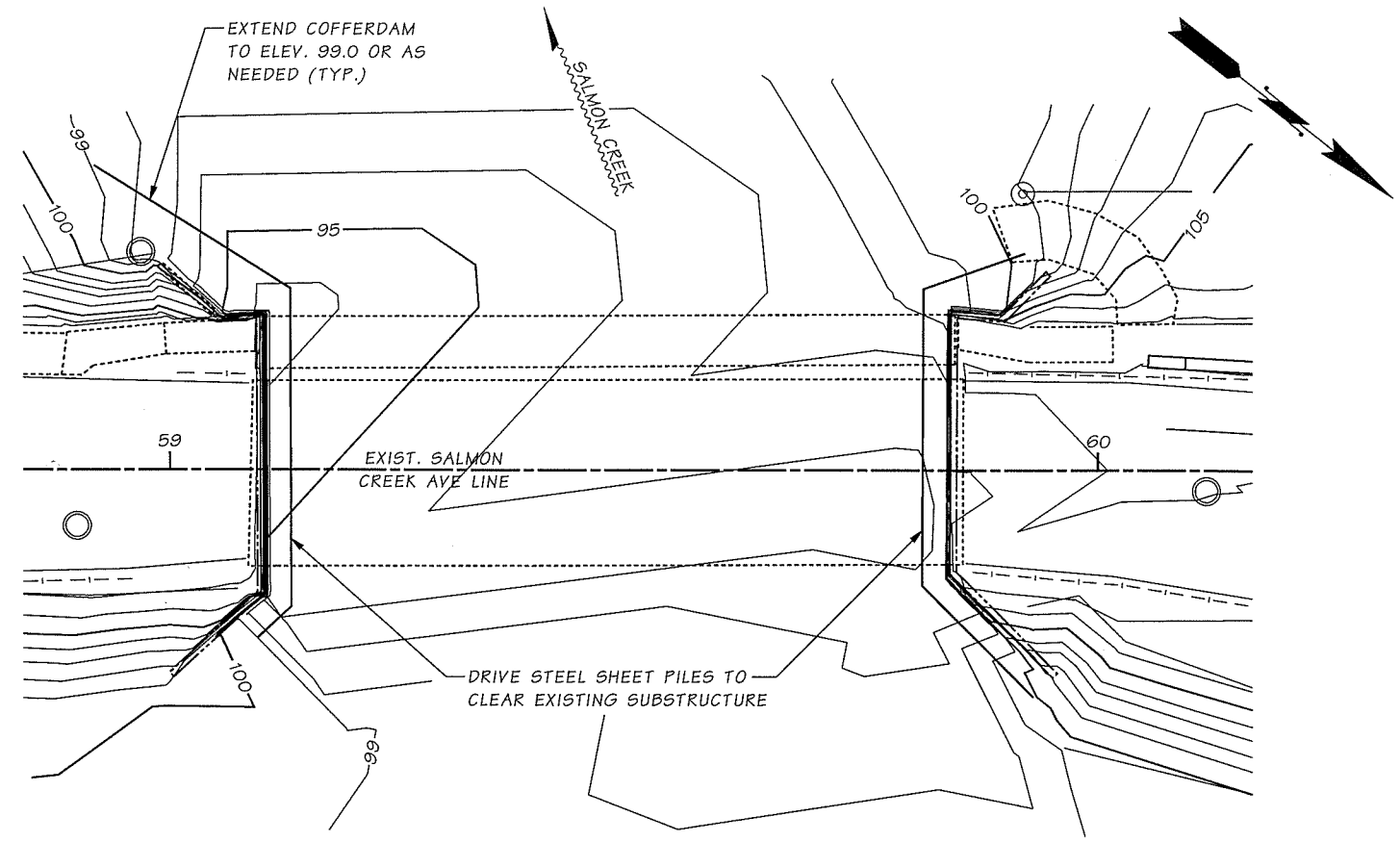

SUBSTRUCTURE DEMOLITION PLAN

REMOVE EXISTING SUBSTRUCTURE TO 2' MINIMUM BELOW FINISH GRADE

LEGEND

B / 15 — IDENTIFIES SECTION, VIEW OR DETAIL

TAKEN OR SHOWN ON BRIDGE SHEET 15

B / — TAKEN OR SHOWN ON THE SAME SHEET

SOIL BORING LOCATIONS

SR 999 JOB NO. ____ SHEET 2

Bridge Design Engr.	Kapur, J	
Supervisor	Kapur, J	
Designed By	MINNS, GEC	11/04
Checked By	Mizumori, A	11/04
Detailed By	Evans, P.D.	11/04
Bridge Projects Engr.		
Prelim. Plan By		
Architect/Specialist		

M:\Y-Team\Clark County Betts Bridge\Window files\GEN NOTES.WND

DATE	REVISION	BY	APP'D

REGION NO.	STATE	FED. AID PROJ. NO.	SHEET NO.	TOTAL SHEETS
10	WASH.	BRM-4231(004)		
JOB NUMBER				

GARY E.C. MINNS — STATE OF WASHINGTON — 10798 — REGISTERED PROFESSIONAL ENGINEER — EXPIRES 1/22/06

BRIDGE AND STRUCTURES OFFICE

JUGESH KAPUR — STATE OF WASHINGTON — 25400 — REGISTERED PROFESSIONAL ENGINEER — EXPIRES 5/19/06

Washington State Department of Transportation

SALMON CREEK AVENUE
BETTS BRIDGE REPLACEMENT

GENERAL NOTES

BRIDGE SHEET NO. 2

SHEET 73 OF 105 SHEETS

Thu Nov 04 15:11:59 2004

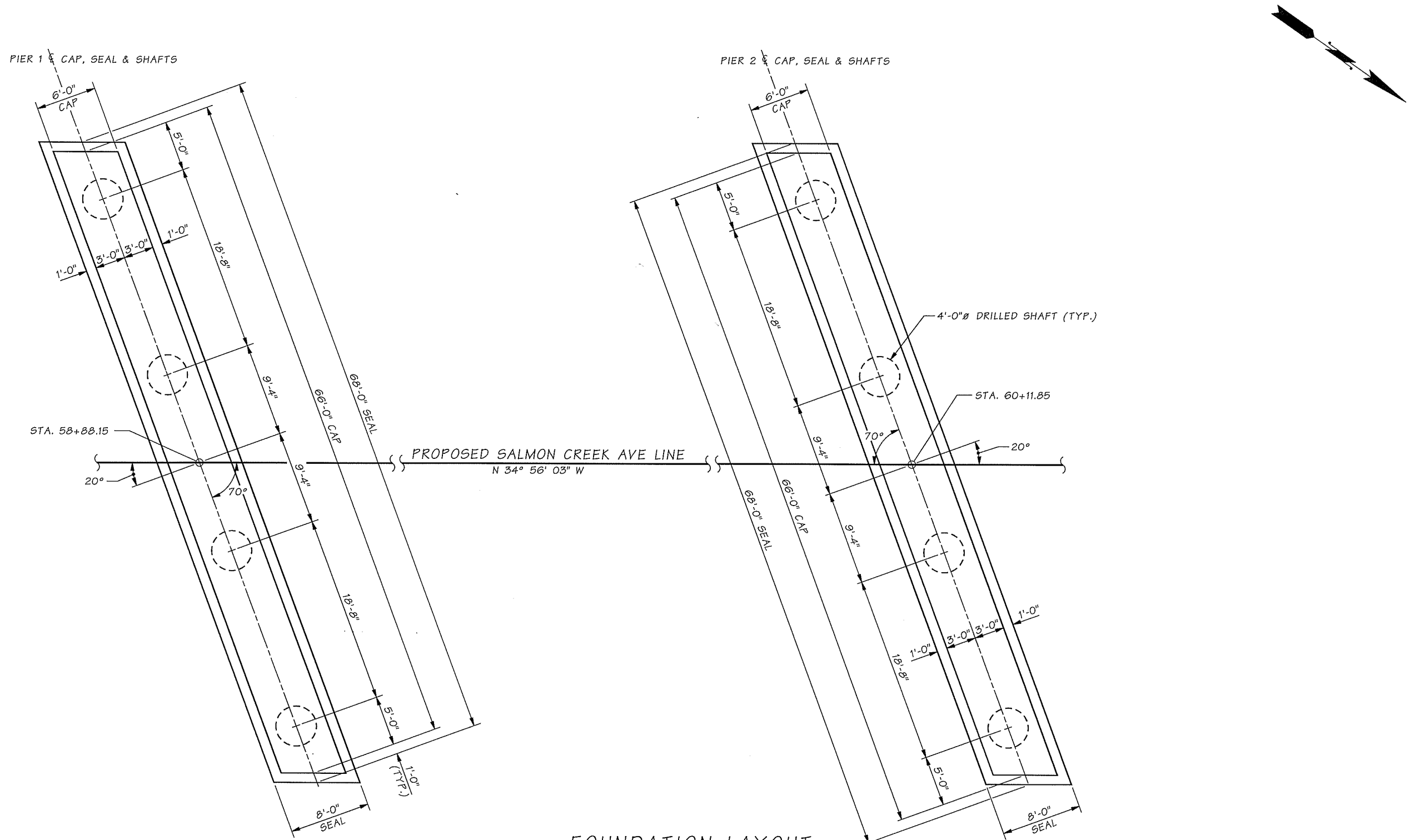

FOUNDATION LAYOUT

BEARING OF ALL PIERS IS N 35° 03' 57" E

SR 999 JOB NO. ____ SHEET 3

Bridge Design Engr.	Kapur, J		M:\Y-Team\Clark County Betts Bridge\Window files\FTG PLAN.WND							
Supervisor	Kapur, J									
Designed By	MINNS, GEC	11/04								
Checked By	Mizumori, A	11/04								
Detailed By	Evans, P.D.	11/04								
Bridge Projects Engr.										
Prelim. Plan By										
Architect/Specialist			DATE	REVISION	BY	APP'D				

REGION NO.	STATE	FED. AID PROJ. NO.	SHEET NO.	TOTAL SHEETS
10	WASH.	BRM-4231(004)		
JOB NUMBER				

GARY E.C. MINNS — STATE OF WASHINGTON — 10798 — REGISTERED PROFESSIONAL ENGINEER — EXPIRES 1/22/06

BRIDGE AND STRUCTURES OFFICE

JUGESH KAPUR — STATE OF WASHINGTON — 25400 — REGISTERED PROFESSIONAL ENGINEER — EXPIRES 5/19/06

Washington State Department of Transportation

SALMON CREEK AVENUE
BETTS BRIDGE REPLACEMENT

FOUNDATION LAYOUT

BRIDGE SHEET NO. 3

SHEET 74 OF 105 SHEETS

Thu Nov 04 15:11:58 2004

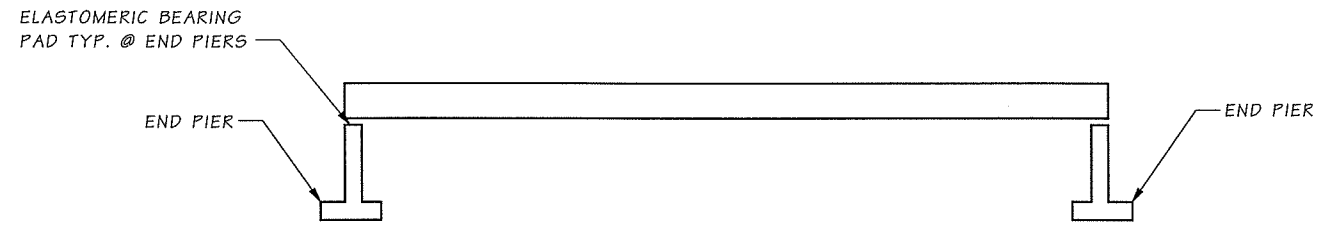

STAGE 1 ~ SET GIRDERS IN PLACE

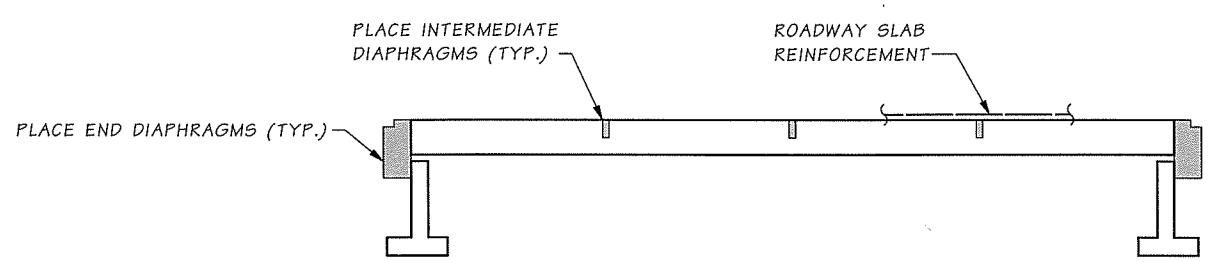

STAGE 2 ~ PLACE DIAPHRAGMS
AND PLACE REINFORCEMENT

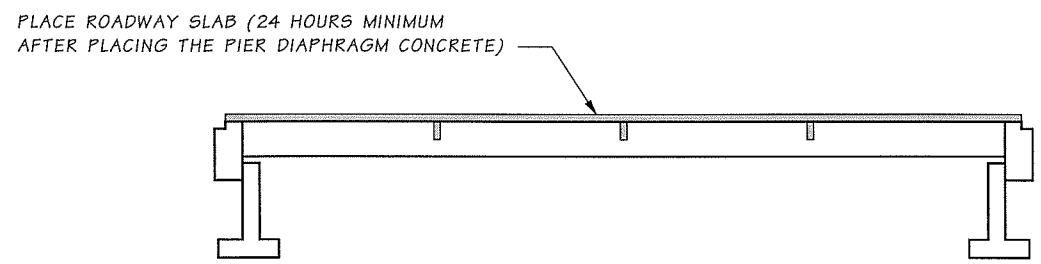

STAGE 3 ~ PLACE ROADWAY SLAB

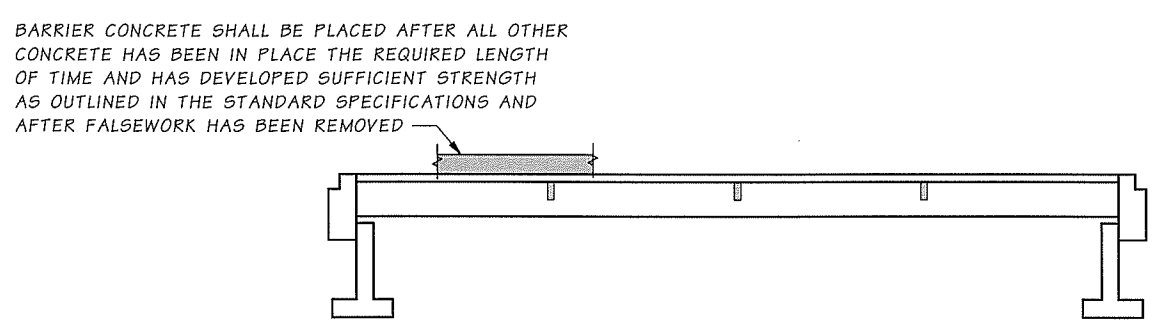

STAGE 4 ~ PLACE PEDESTRIAN BARRIERS AND SIDEWALKS

CONSTRUCTION SEQUENCE ~ SUPERSTRUCTURE

SR 999 JOB NO. ____ SHEET 4

Bridge Design Engr.	Kapur, J		M:\Y-Team\Clark County Betts Bridge\Window files\CONST SEQ.WND
Supervisor	Kapur, J		
Designed By	MINNS, GEC	11/04	
Checked By	Mizumori, A	11/04	
Detailed By	Evans, P.D.	11/04	
Bridge Projects Engr.			
Prelim. Plan By			
Architect/Specialist			

DATE	REVISION	BY	APP'D

REGION NO.	STATE	FED. AID PROJ. NO.	SHEET NO.	TOTAL SHEETS
10	WASH.	BRM-4231(004)		
JOB NUMBER				

GARY E.C. MINNS — STATE OF WASHINGTON — 10796 — REGISTERED PROFESSIONAL ENGINEER — EXPIRES 1/22/06

BRIDGE AND STRUCTURES OFFICE

JUGESH KAPUR — STATE OF WASHINGTON — 25400 — REGISTERED PROFESSIONAL ENGINEER — EXPIRES 5/19/06

Washington State Department of Transportation

SALMON CREEK AVENUE
BETTS BRIDGE REPLACEMENT

CONSTRUCTION SEQUENCE

BRIDGE SHEET NO. 4

SHEET 75 OF 105 SHEETS

Thu Nov 04 15:11:57 2004

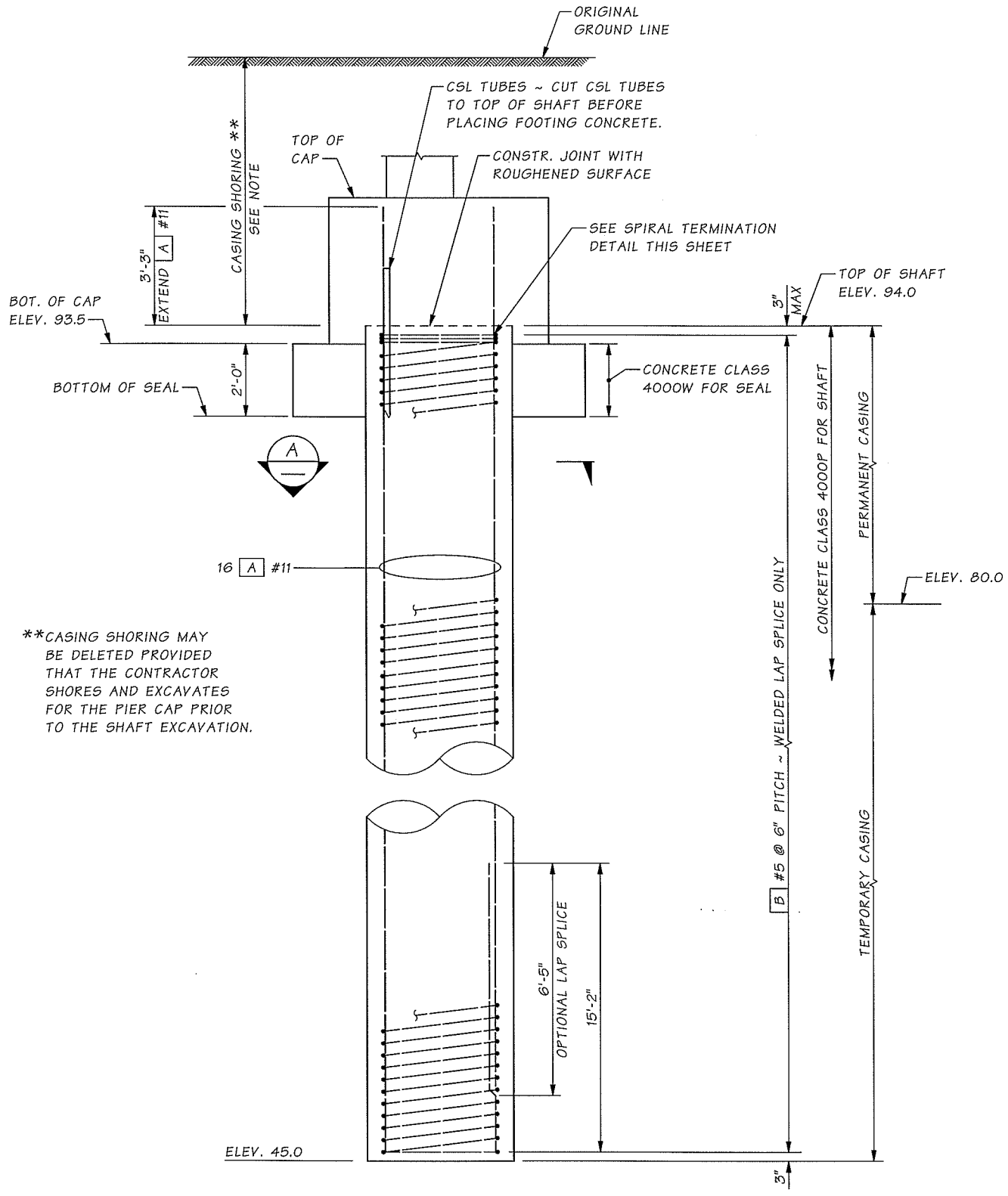

**CASING SHORING MAY BE DELETED PROVIDED THAT THE CONTRACTOR SHORES AND EXCAVATES FOR THE PIER CAP PRIOR TO THE SHAFT EXCAVATION.

ELEVATION

SEE BR. SHEET 8 FOR #5 SPIRAL REINFORCING IN CAP

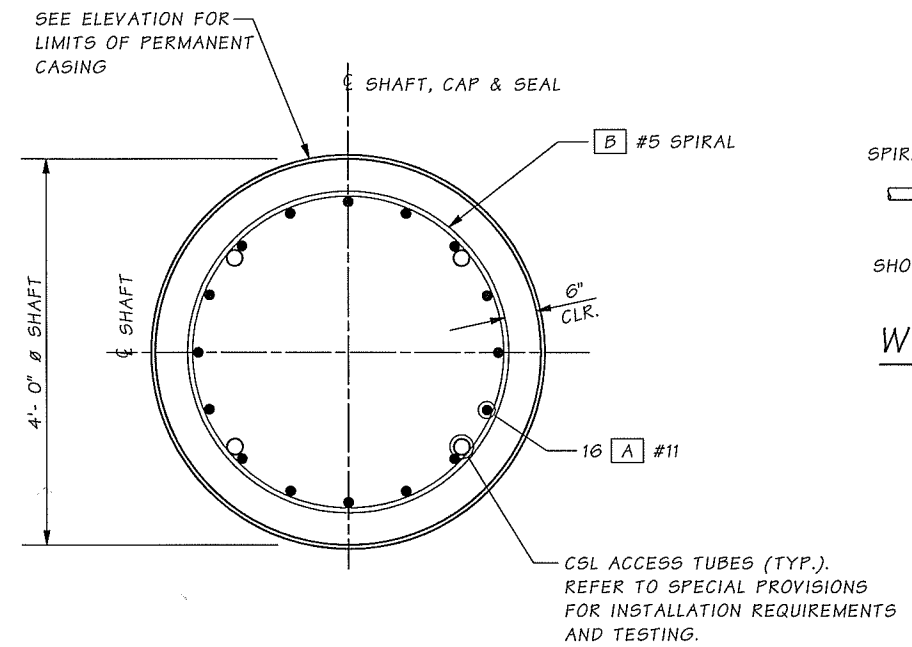

SECTION A

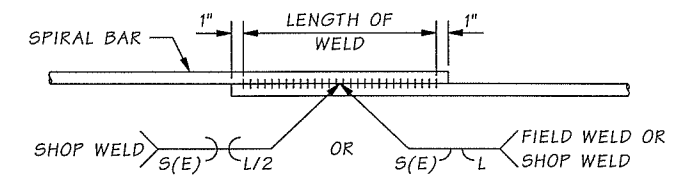

WELDED LAP SPLICE DETAIL

WELDING SHALL MEET THE REQUIREMENTS OF STD. SPEC. 6-02.3(24)E
FOR WELD DIMENSIONS, SEE TABLE BELOW.

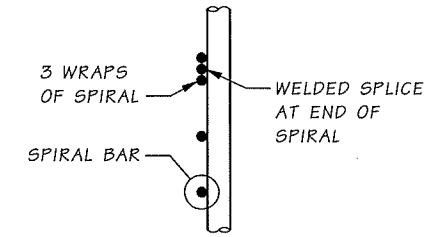

SPIRAL TERMINATION DETAIL

SHAFT BAR LIST

ALL REINFORCING SHALL BE AASHTO M31, GR. 60

MARK	SIZE	NO.	LENGTH	BEND TYPE	WT. (lbs.)
A	11	128	52'-3"	STRAIGHT	35,530
B	5	8	48'-6"	SPIRAL	7,700
				TOTAL	43,230

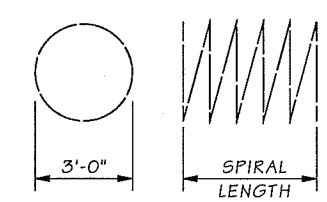

WEIGHT INCLUDES SPLICES

SPIRAL

SHAFT SPIRAL OPTIONS

DEFORMED BAR AASHTO M 31 GR. 60	PLAIN STEEL BAR AASHTO M 31 GR. 60	COLD DRAWN WIRE AASHTO M 32	DEFORMED WIRE AASHTO M225	WELD DIMENSIONS		
				S	E	LENGTH (L)
#5	5/8"ø	W31	D31	5/16	3/16	6

SR 999 JOB NO. ____ SHEET 5

Bridge Design Engr.	Kapur, J		
Supervisor	Kapur, J		
Designed By	MINNS, GEC	11/04	
Checked By	Mizumori, A	11/04	
Detailed By	Evans, P.D.	11/04	
Bridge Projects Engr.			
Prelim. Plan By			
Architect/Specialist			

M:\Y-Team\Clark County Betts Bridge\window files\P1 & P2 SHAFTS.WND

DATE	REVISION	BY	APP'D

REGION NO.	STATE	FED. AID PROJ. NO.	SHEET NO.	TOTAL SHEETS
10	WASH.	BRM-4231(004)		
JOB NUMBER				

GARY E. C. MINNS — STATE OF WASHINGTON — 10706 — REGISTERED PROFESSIONAL ENGINEER — EXPIRES 1/22/06

BRIDGE AND STRUCTURES OFFICE

JUGESH KAPUR — STATE OF WASHINGTON — 25406 — REGISTERED PROFESSIONAL ENGINEER — EXPIRES 5/19/06

Washington State Department of Transportation

SALMON CREEK AVENUE
BETTS BRIDGE REPLACEMENT

SHAFTS AT PIERS 1 AND 2

BRIDGE SHEET NO. 5

SHEET 76 OF 105 SHEETS

Thu Nov 04 15:44:26 2004

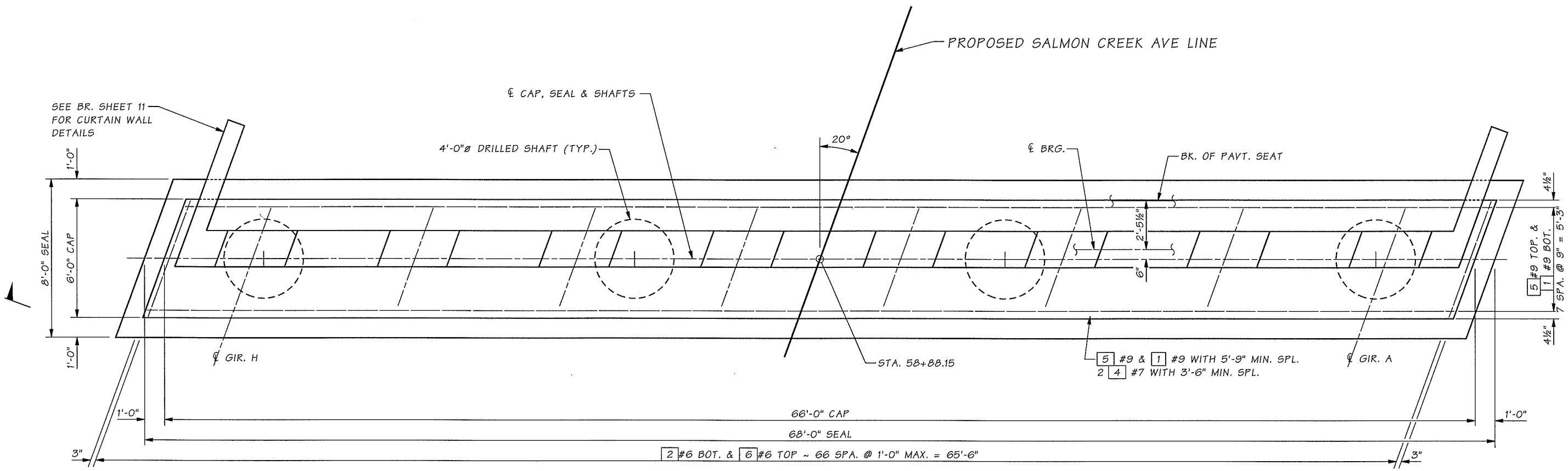

PIER 1 PLAN

SEE FRAMING PLAN BR. SHEET 14 FOR GIRDER LOCATIONS

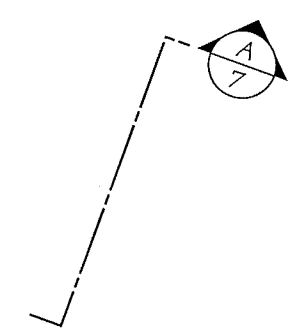

SR 999 JOB NO. ____ SHEET 6

Bridge Design Engr.	Kapur, J		M:\Y-Team\Clark County Betts Bridge\Window files\PIER 1.WND
Supervisor	Kapur, J		
Designed By	MINNS, GEC	11/04	
Checked By	Mizumori, A	11/04	
Detailed By	Evans, P.D.	11/04	
Bridge Projects Engr.			
Prelim. Plan By			
Architect/Specialist			

DATE	REVISION	BY	APP'D

REGION NO.	STATE	FED. AID PROJ. NO.	SHEET NO.	TOTAL SHEETS
10	WASH.	BRM-4231(004)		
JOB NUMBER				

GARY E.C. MINNS — STATE OF WASHINGTON — 10796 — REGISTERED PROFESSIONAL ENGINEER — EXPIRES 1/22/06

BRIDGE AND STRUCTURES OFFICE

JUGESH KAPUR — STATE OF WASHINGTON — 25400 — REGISTERED PROFESSIONAL ENGINEER — EXPIRES 5/19/06

Washington State Department of Transportation

SALMON CREEK AVENUE
BETTS BRIDGE REPLACEMENT

PIER 1 PLAN

BRIDGE SHEET NO. 6

SHEET 77 OF 105 SHEETS

Thu Nov 04 15:12:03 2004

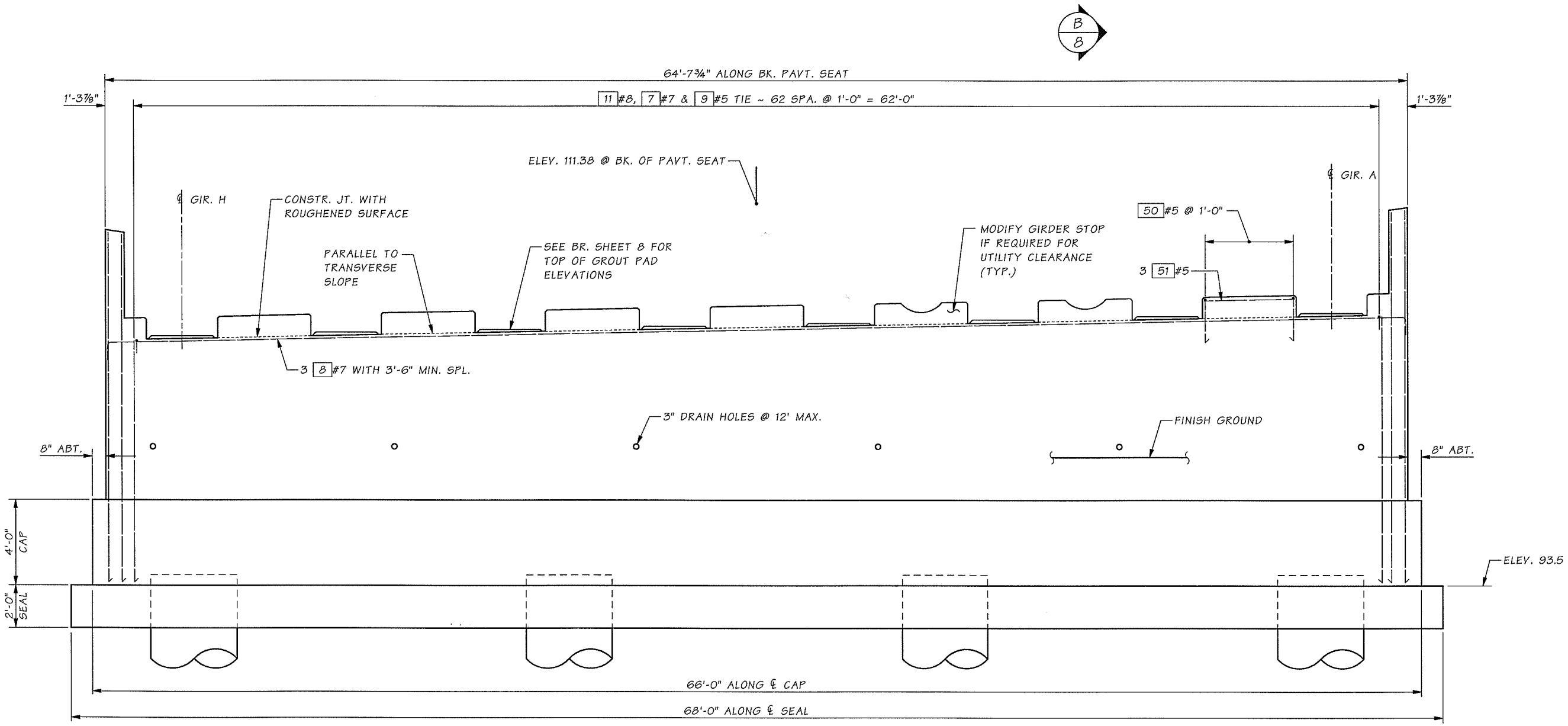

PIER 1 ELEVATION (A/6)

SHOWN LOOKING BACK ON STATION

SR 999 JOB NO. ____ SHEET 7 ____

Bridge Design Engr.	Kapur, J		
Supervisor	Kapur, J		
Designed By	MINNS, GEC	11/04	
Checked By	Mizumori, A	11/04	
Detailed By	Evans, P.D.	11/04	
Bridge Projects Engr.			
Prelim. Plan By			
Architect/Specialist			

M:\Y-Team\Clark County Betts Bridge\Window files\PIER 1 ELEV.WND

DATE	REVISION	BY	APP'D

REGION NO.	STATE	FED. AID PROJ. NO.	SHEET NO.	TOTAL SHEETS
10	WASH.	BRM-4231(004)		
JOB NUMBER				

GARY E. C. MINNS — STATE OF WASHINGTON — 10798 — REGISTERED PROFESSIONAL ENGINEER — EXPIRES 1/22/06

BRIDGE AND STRUCTURES OFFICE

JUGESH KAPUR — STATE OF WASHINGTON — 25400 — REGISTERED PROFESSIONAL ENGINEER — EXPIRES 5/19/06

Washington State Department of Transportation

SALMON CREEK AVENUE
BETTS BRIDGE REPLACEMENT

PIER 1 ELEVATION

BRIDGE SHEET NO. 7

SHEET 78 OF 105 SHEETS

Thu Nov 04 15:12:04 2004

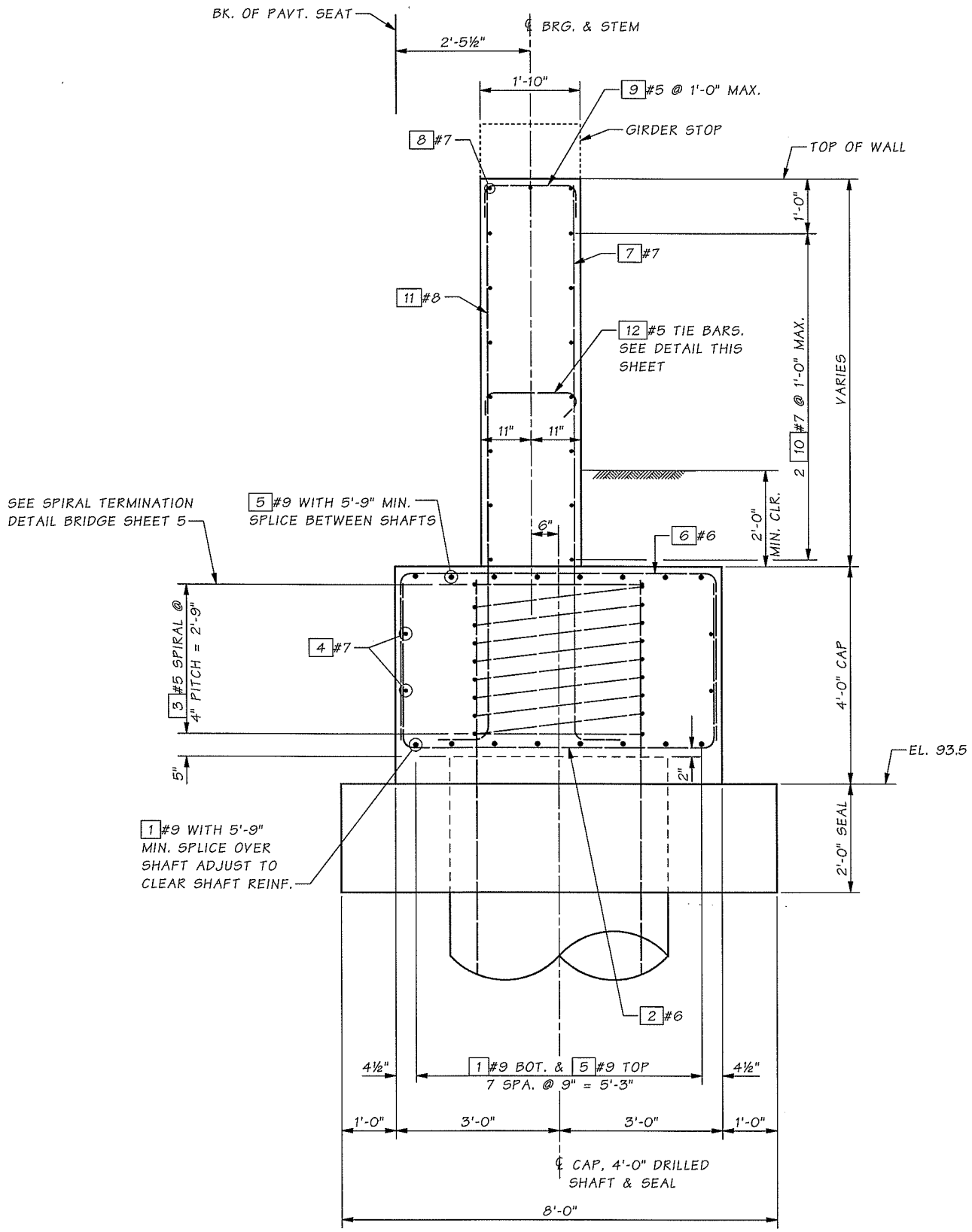

SECTION B 7/10

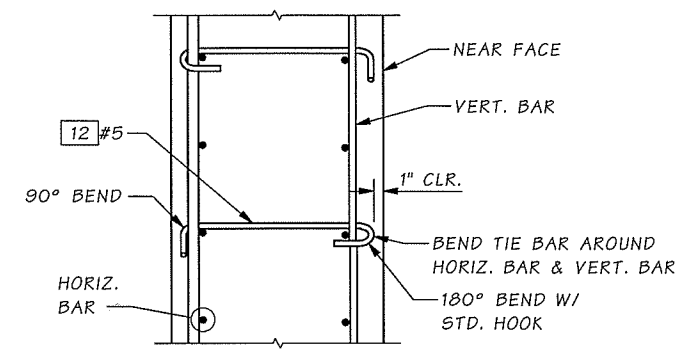

TIE BAR DETAIL

ALTERNATE 180° HOOK EVERY OTHER TIE BAR.

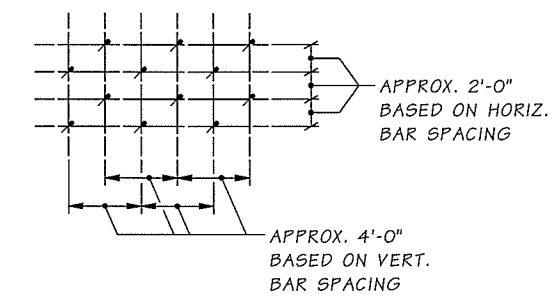

TIE SPACING DETAIL

TOP OF GROUT PAD ELEVATIONS

GIRDER	PIER 1 ELEVATION	PIER 2 ELEVATION
A	105.59	105.71
B	105.54	105.64
C	105.50	105.57
D	105.46	105.50
E	105.42	105.43
F	105.38	105.36
G	105.34	105.29
H	105.29	105.22

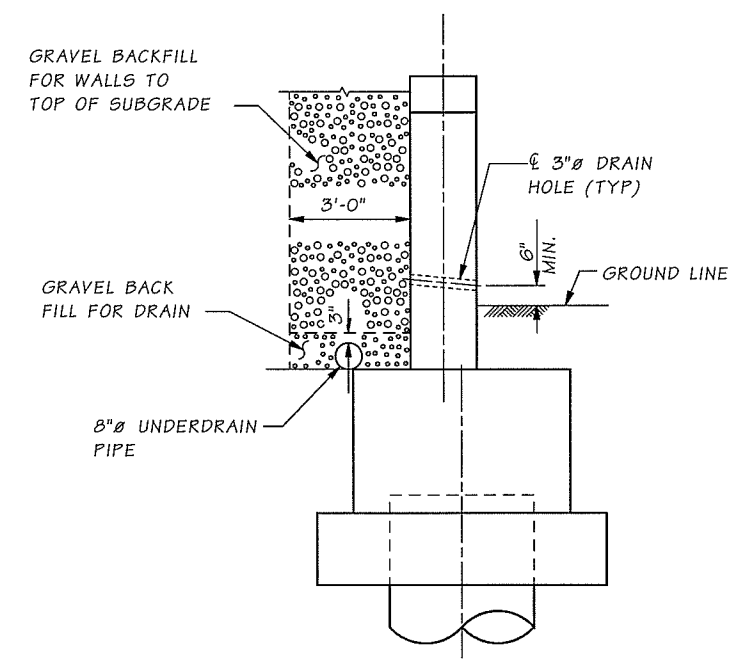

DRAINAGE DETAIL

Bridge Design Engr.	Kapur, J		
Supervisor	Kapur, J		
Designed By	MINNS, GEC	11/04	
Checked By	Mizumori, A	11/04	
Detailed By	Evans, P.D.	11/04	
Bridge Projects Engr.			
Prelim. Plan By			
Architect/Specialist			

M:\Y-Team\Clark County Betts Bridge\Window files\PIER 1 SECT.WND

DATE	REVISION	BY	APP'D

REGION NO.	STATE	FED. AID PROJ. NO.	SHEET NO.	TOTAL SHEETS
10	WASH.	BRM-4231(004)		
JOB NUMBER				

GARY E. C. MINNS — STATE OF WASHINGTON — 10708 — REGISTERED PROFESSIONAL ENGINEER — EXPIRES 1/22/06

BRIDGE AND STRUCTURES OFFICE

JUGESH KAPUR — STATE OF WASHINGTON — 25400 — REGISTERED PROFESSIONAL ENGINEER — EXPIRES 5/19/06

Washington State Department of Transportation

SALMON CREEK AVENUE
BETTS BRIDGE REPLACEMENT

PIER 1 AND PIER 2 SECTION

BRIDGE SHEET NO. 8

SHEET 79 OF 105 SHEETS

SR 999 JOB NO. ____ SHEET 8

Thu Nov 04 15:12:05 2004

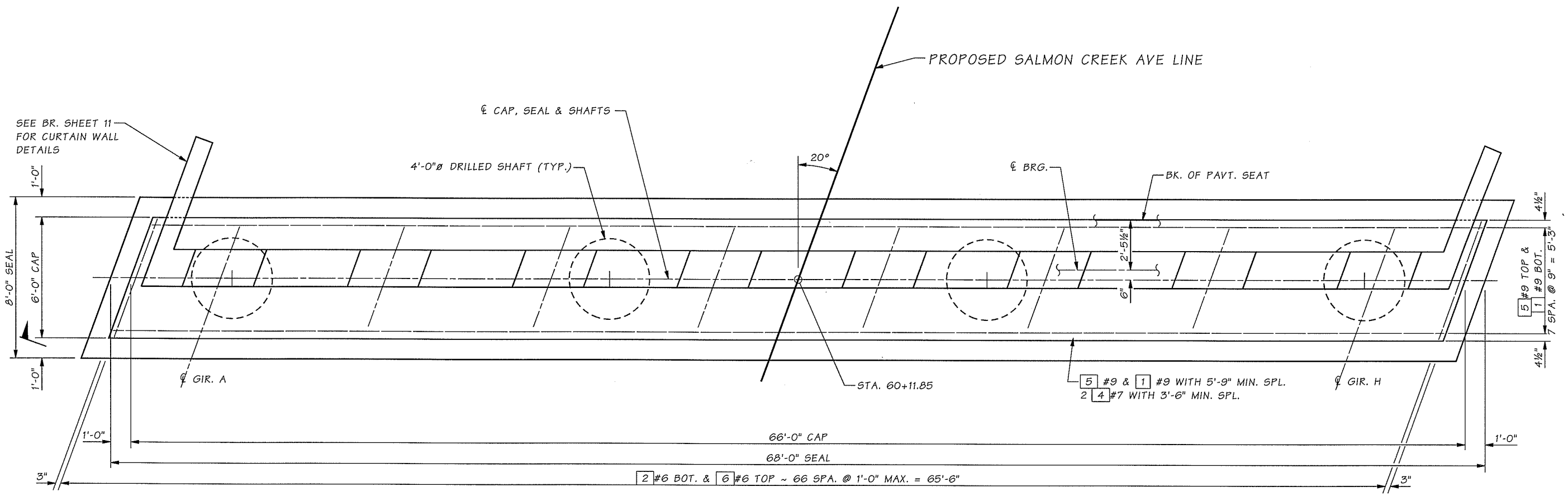

PIER 2 PLAN

SEE FRAMING PLAN BR. SHEET 14 FOR GIRDER LOCATIONS

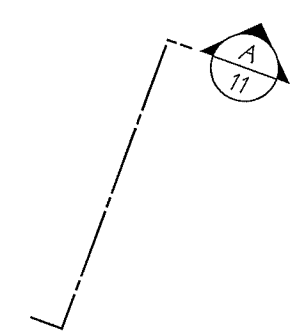

SR 999 JOB NO. ____ SHEET 9

Bridge Design Engr.	Kapur, J		
Supervisor	Kapur, J		
Designed By	MINNS, GEC	11/04	
Checked By	Mizumori, A	11/04	
Detailed By	Evans, P.D.	11/04	
Bridge Projects Engr.			
Prelim. Plan By			
Architect/Specialist			

M:\Y-Team\Clark County Betts Bridge\Window files\PIER 2.WND

DATE	REVISION	BY	APP'D

REGION NO.	STATE	FED. AID PROJ. NO.	SHEET NO.	TOTAL SHEETS
10	WASH.	BRM-4231(004)		
JOB NUMBER				

GARY E. C. MINNS — STATE OF WASHINGTON — 16778 — REGISTERED PROFESSIONAL ENGINEER — EXPIRES 1/22/06

BRIDGE AND STRUCTURES OFFICE

JUGESH KAPUR — STATE OF WASHINGTON — 25400 — REGISTERED PROFESSIONAL ENGINEER — EXPIRES 5/19/06

Washington State Department of Transportation

SALMON CREEK AVENUE
BETTS BRIDGE REPLACEMENT

PIER 2 PLAN

BRIDGE SHEET NO. 9

SHEET 80 OF 105 SHEETS

Thu Nov 04 15:12:06 2004

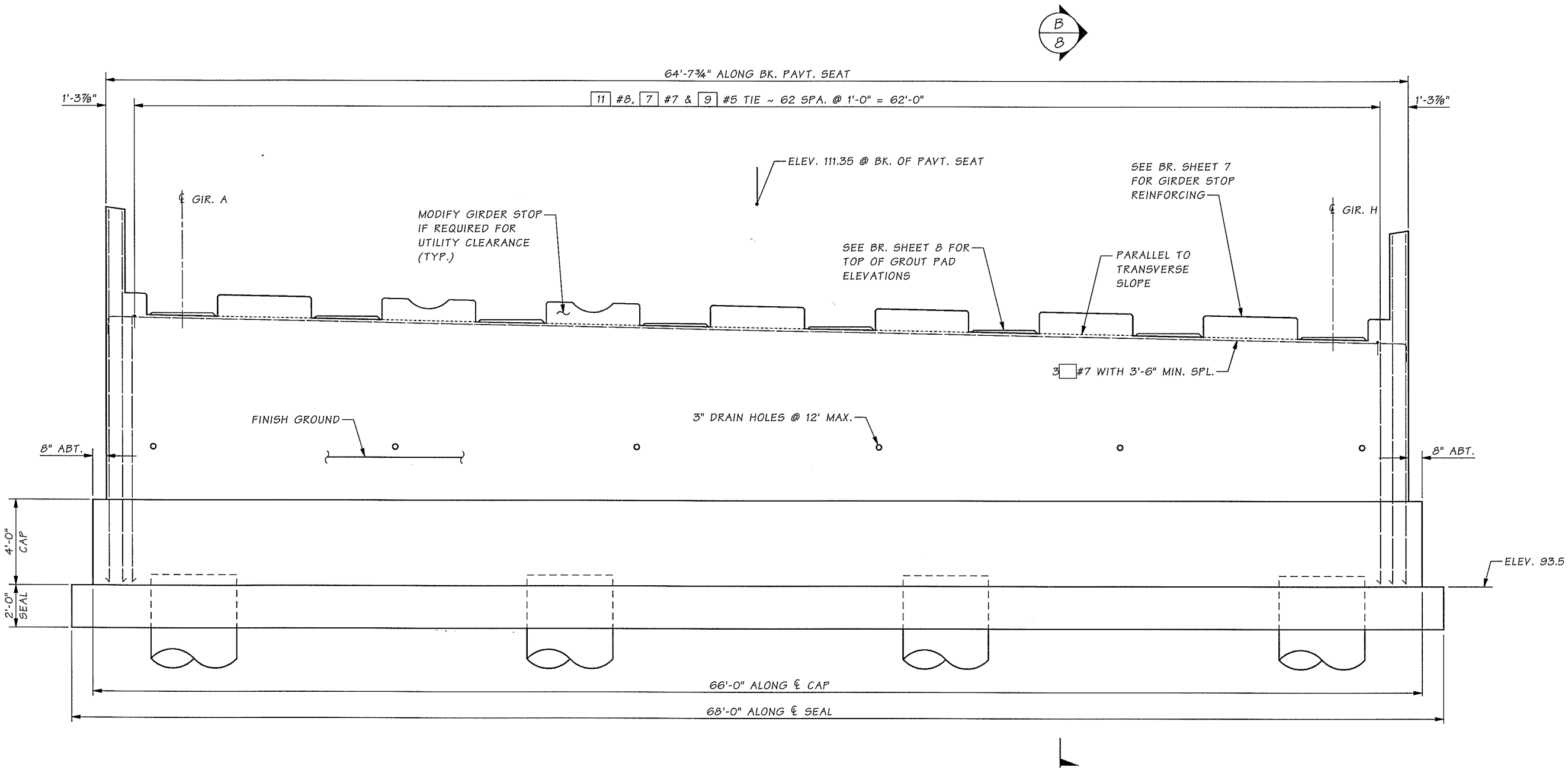

PIER 2 ELEVATION (A / 10)

SHOWN LOOKING AHEAD ON STATION

SR 999 JOB NO. ____ SHEET 10

Bridge Design Engr.	Kapur, J		M:\Y-Team\Clark County Betts Bridge\Window files\PIER 2 ELEV.WND			REGION NO.	STATE	FED. AID PROJ. NO.	SHEET NO.	TOTAL SHEETS
Supervisor	Kapur, J					10	WASH.	BRM-4231(004)		
Designed By	MINNS, GEC	11/04				JOB NUMBER				
Checked By	Mizumori, A	11/04								
Detailed By	Evans, P.D.	11/04								
Bridge Projects Engr.										
Prelim. Plan By										
Architect/Specialist			DATE	REVISION	BY	APP'D				

Thu Nov 04 15:12:07 2004

GARY E. C. MINNS — STATE OF WASHINGTON — 10706 — REGISTERED PROFESSIONAL ENGINEER — EXPIRES 1/22/06

BRIDGE AND STRUCTURES OFFICE

JUGESH KAPUR — STATE OF WASHINGTON — 25400 — REGISTERED PROFESSIONAL ENGINEER — EXPIRES 5/19/06

Washington State Department of Transportation

SALMON CREEK AVENUE
BETTS BRIDGE REPLACEMENT

PIER 2 ELEVATION

BRIDGE SHEET NO. 10

SHEET 81 OF 105 SHEETS

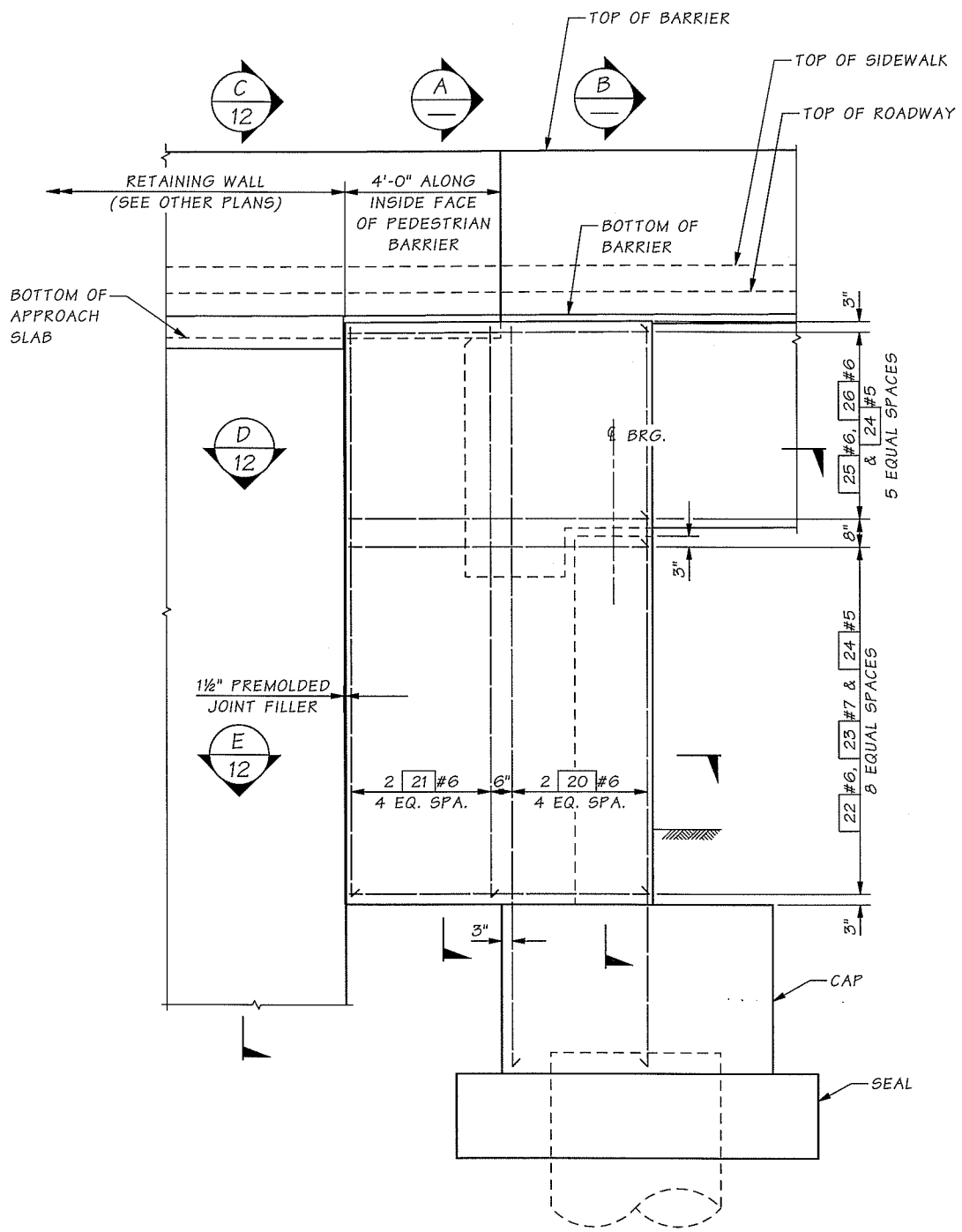

ELEVATION

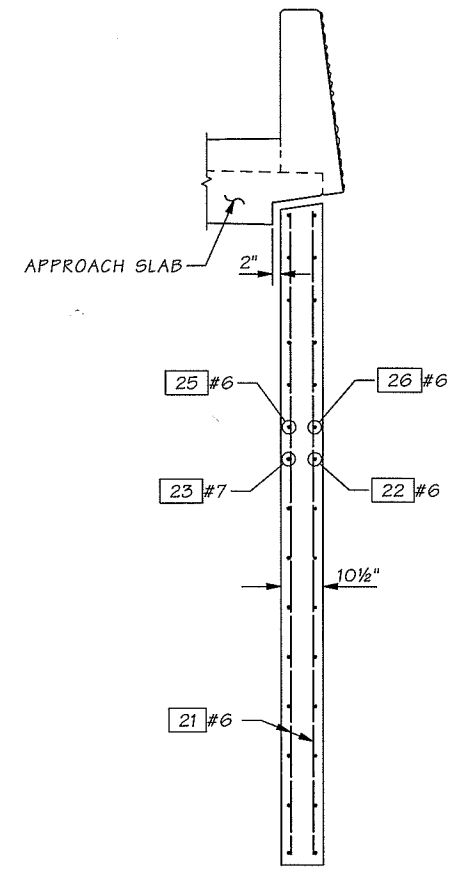

SECTION A

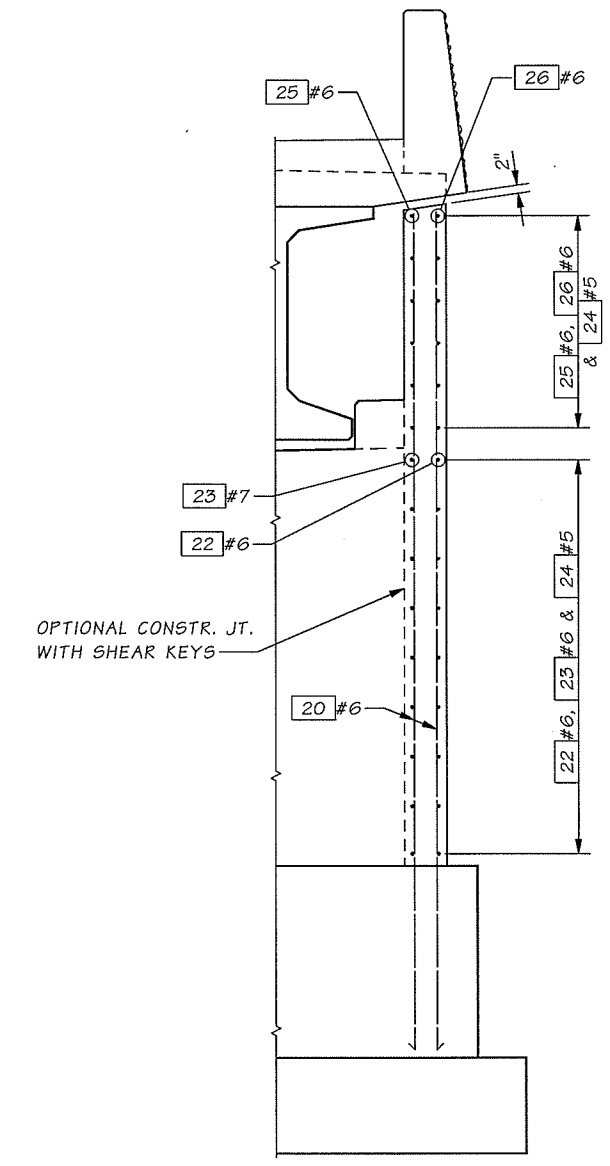

SECTION B

SR 999 JOB NO. ____ SHEET 11

Bridge Design Engr.	Kapur, J		M:\Y-Team\Clark County Betts Bridge\Window files\PIER 1 CURTAIN WALL.WND							
Supervisor	Kapur, J									
Designed By	MINNS, GEC	11/04								
Checked By	Mizumori, A	11/04								
Detailed By	Evans, P.D.	11/04								
Bridge Projects Engr.										
Prelim. Plan By										
Architect/Specialist			DATE	REVISION	BY	APP'D				

REGION NO.	STATE	FED. AID PROJ. NO.	SHEET NO.	TOTAL SHEETS
10	WASH.	BRM-4231(004)		
JOB NUMBER				

Thu Nov 04 15:12:03 2004

GARY E.C. MINNS — STATE OF WASHINGTON — 10798 — REGISTERED PROFESSIONAL ENGINEER — EXPIRES 1/22/06

BRIDGE AND STRUCTURES OFFICE

JUGESH KAPUR — STATE OF WASHINGTON — 25400 — REGISTERED PROFESSIONAL ENGINEER — EXPIRES 5/19/06

Washington State Department of Transportation

SALMON CREEK AVENUE
BETTS BRIDGE REPLACEMENT

CURTAIN WALL DETAILS 1 OF 2

BRIDGE SHEET NO. 11

SHEET 82 OF 105 SHEETS

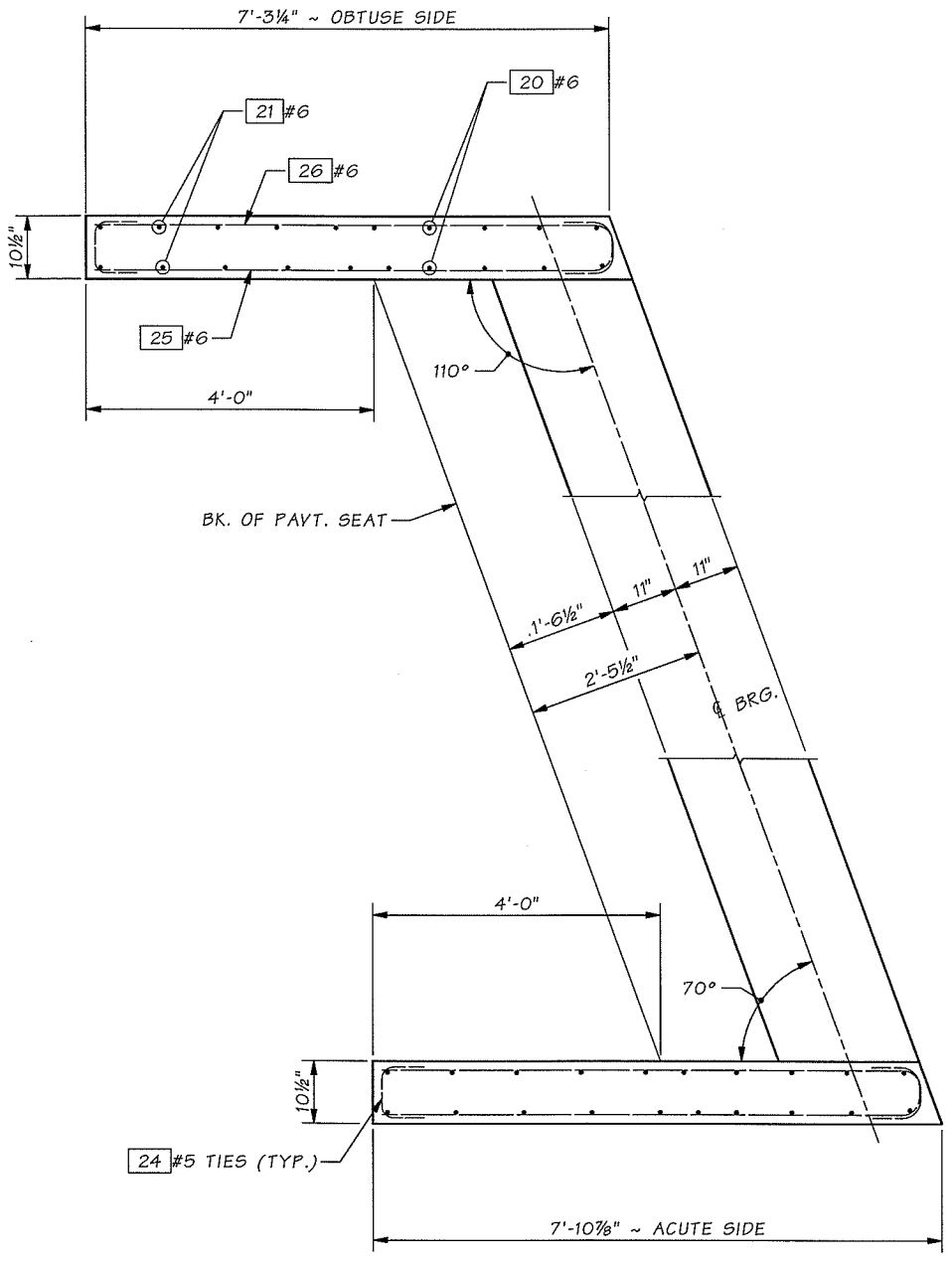

SECTION D 11

SUPERSTRUCTURE NOT SHOWN.
SHOWN FOR PIER 1.
PIER 2 IS SIMILAR

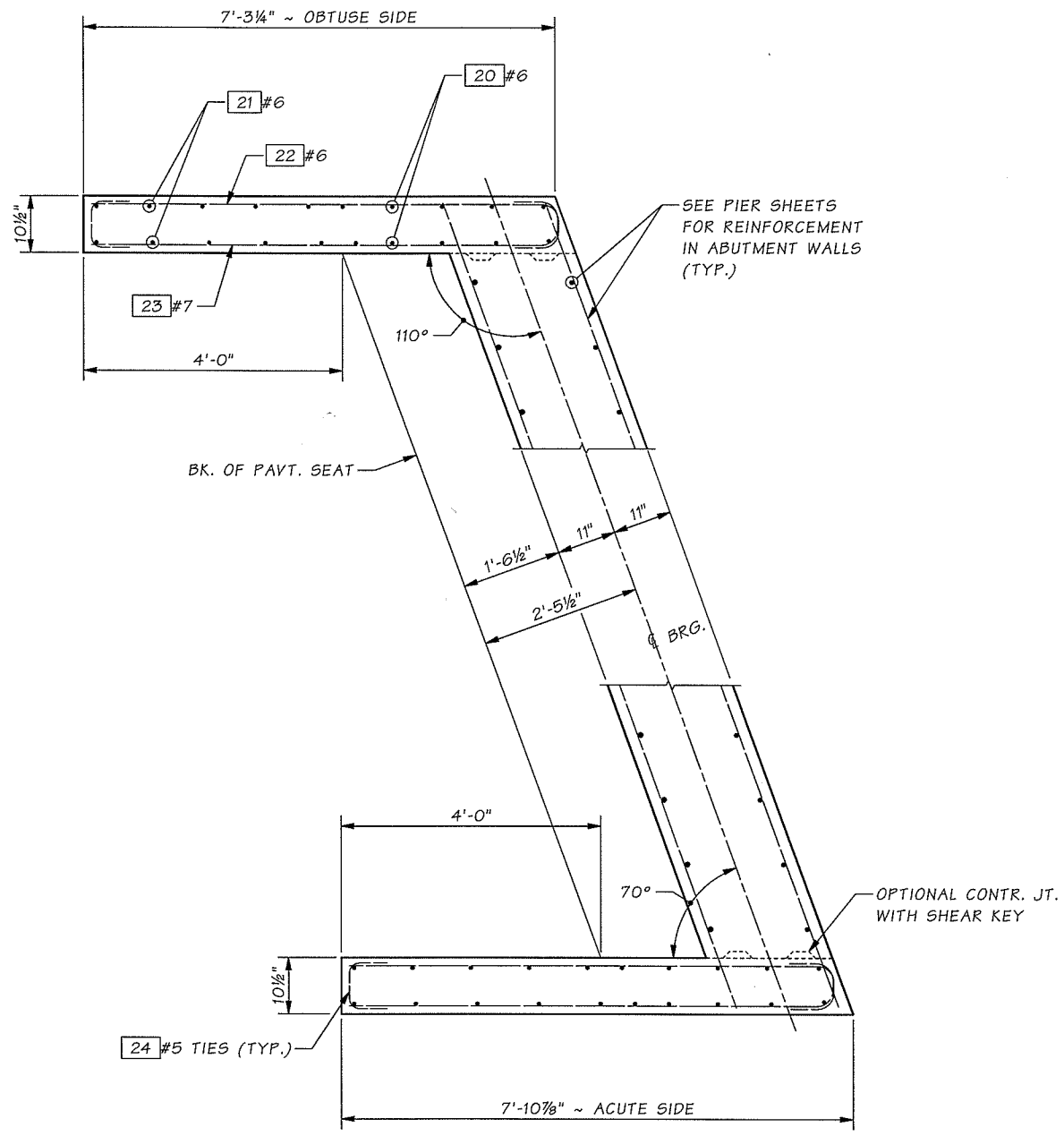

SECTION E 11

SHOWN FOR PIER 1,
PIER 2 IS SIMILAR

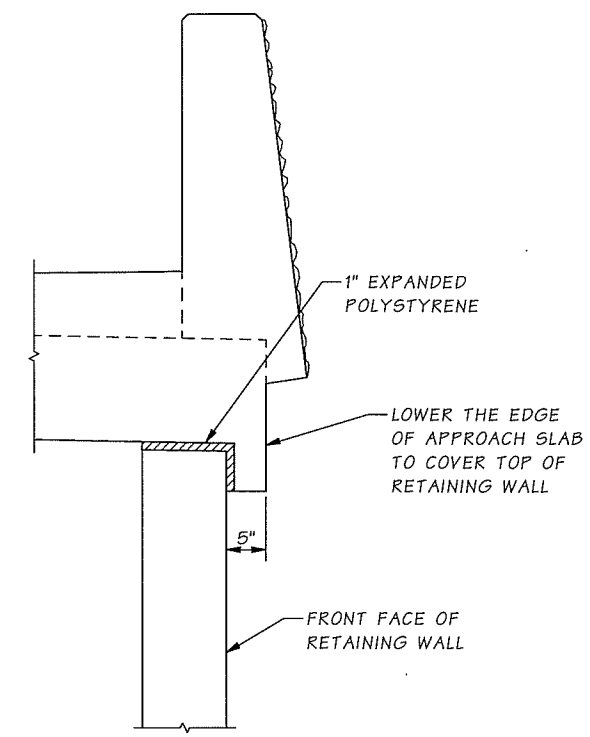

SECTION C 11

SEE OTHER PLANS FOR DETAILS OF RETAINING WALL

SR 999 JOB NO. ____ SHEET 12

Bridge Design Engr.	Kapur, J		M:\Y-Team\Clark County Betts Bridge\Window files\PIER 2 CURTAIN WALL.WND			REGION NO.	STATE	FED. AID PROJ. NO.	SHEET NO.	TOTAL SHEETS
Supervisor	Kapur, J					10	WASH.	BRM-4231(004)		
Designed By	MINNS, GEC	11/04				JOB NUMBER				
Checked By	Mizumori, A	11/04								
Detailed By	Evans, P.D.	11/04								
Bridge Projects Engr.										
Prelim. Plan By										
Architect/Specialist			DATE	REVISION	BY	APP'D				

Thu Nov 04 15:12:06 2004

GARY E.C. MINNS — STATE OF WASHINGTON — 10798 — REGISTERED PROFESSIONAL ENGINEER — EXPIRES 1/22/06

BRIDGE AND STRUCTURES OFFICE

JUGESH KAPUR — STATE OF WASHINGTON — 25400 — REGISTERED PROFESSIONAL ENGINEER — EXPIRES 5/19/06

Washington State Department of Transportation

SALMON CREEK AVENUE
BETTS BRIDGE REPLACEMENT

CURTAIN WALL DETAILS 2 OF 2

BRIDGE SHEET NO. 12

SHEET 83 OF 105 SHEETS

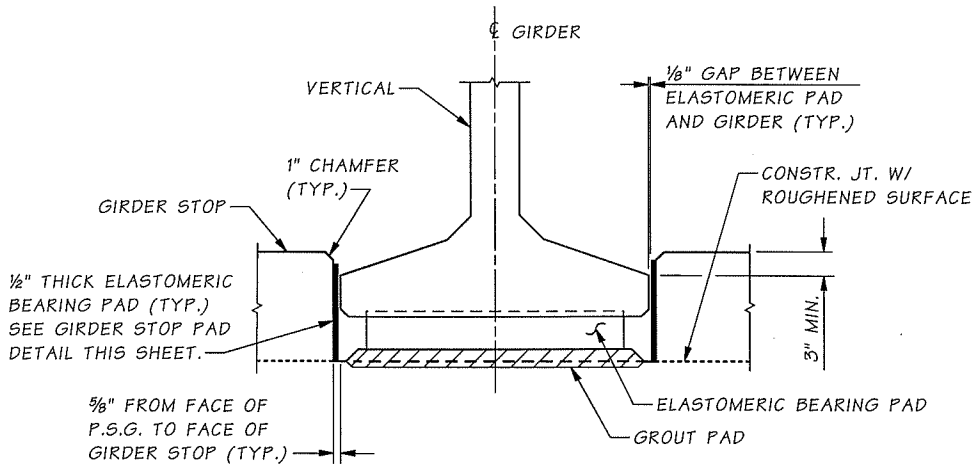

SECTION G

NOTE:

1. GIRDER STOPS SHALL BE CONSTRUCTED AFTER PLACEMENT OF PRESTRESSED GIRDERS.
2. ELASTOMERIC PADS BETWEEN GIRDER AND GIRDER STOPS SHALL BE PLACED AFTER CONSTRUCTING THE GIRDER STOPS. THE PADS SHALL BE CEMENTED TO GIRDER STOPS WITH APPROVED RUBBER CEMENT.

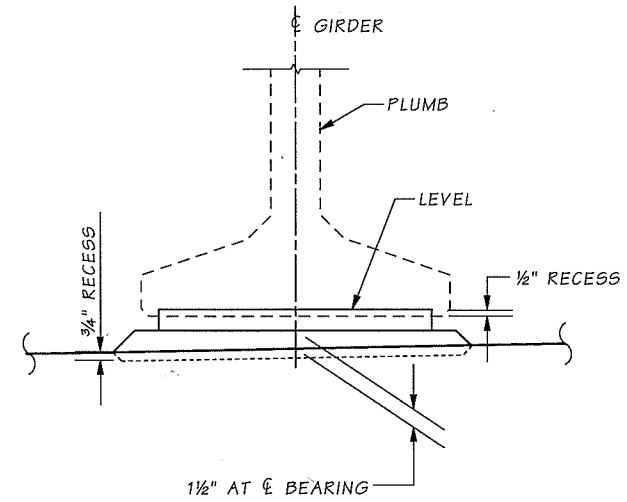

GROUT PAD ELEVATION

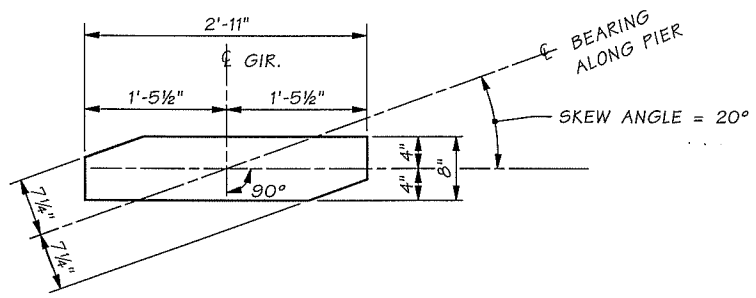

BEARING PAD

LAMINATED ELASTOMERIC BRIDGE PAD 1.73" THICK (3 SHIMS)
DUROMETER HARDNESS = 60

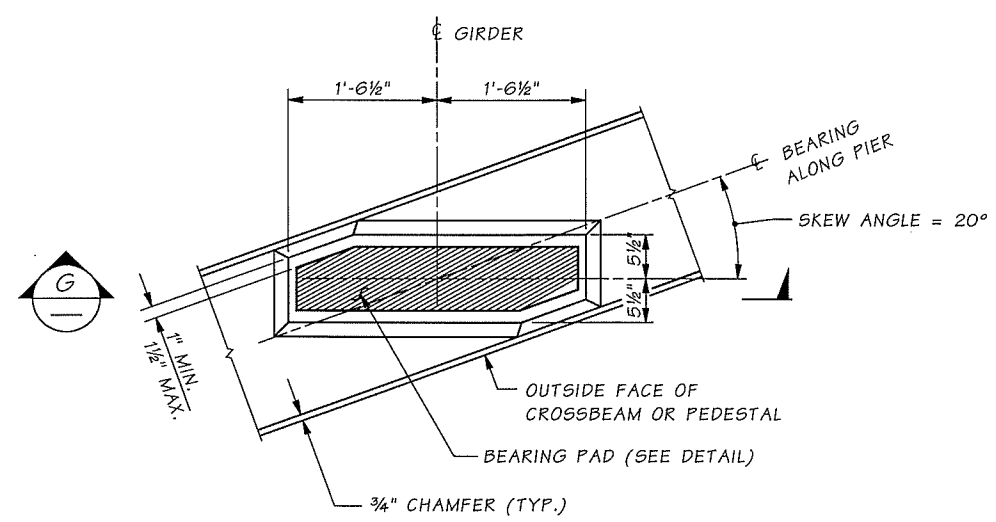

GROUT PAD DETAIL

Bridge Design Engr.	Kapur, J		
Supervisor	Kapur, J		
Designed By	MINNS, GEC	11/04	
Checked By	Mizumori, A	11/04	
Detailed By	Evans, P.D.	11/04	
Bridge Projects Engr.			
Prelim. Plan By			
Architect/Specialist			

M:\Y-Team\Clark County Betts Bridge\Window files\BRG DETAILS.WND

DATE	REVISION	BY	APP'D

REGION NO.	STATE	FED. AID PROJ. NO.	SHEET NO.	TOTAL SHEETS
10	WASH.	BRM-4231(004)		
JOB NUMBER				

CARY E.C. MINNS — STATE OF WASHINGTON — 10798 — REGISTERED PROFESSIONAL ENGINEER — EXPIRES 1/22/06

BRIDGE AND STRUCTURES OFFICE

JUGESH KAPUR — STATE OF WASHINGTON — 25400 — REGISTERED PROFESSIONAL ENGINEER — EXPIRES 5/19/06

Washington State Department of Transportation

SALMON CREEK AVENUE
BETTS BRIDGE REPLACEMENT

BEARING DETAILS

BRIDGE SHEET NO. 13

SHEET 84 OF 105 SHEETS

SR 999 JOB NO. ____ SHEET 13

Thu Nov 04 15:11:56 2004

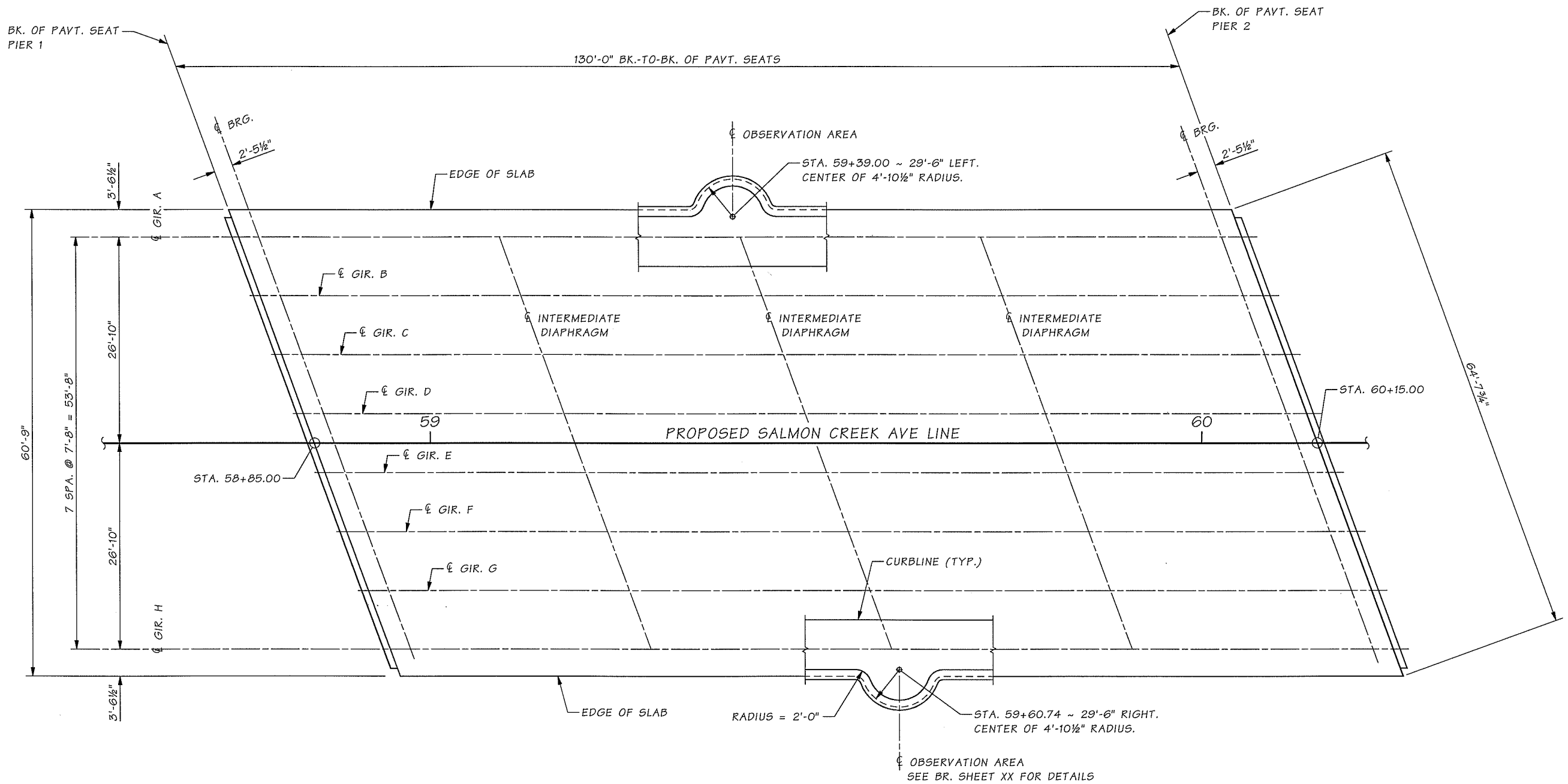

FRAMING PLAN

SR 999 JOB NO. ____ SHEET 14

Bridge Design Engr.	Kapur, J		
Supervisor	Kapur, J		
Designed By	MINNS, GEC	11/04	
Checked By	Mizumori, A	11/04	
Detailed By	Evans, P.D.	11/04	
Bridge Projects Engr.			
Prelim. Plan By			
Architect/Specialist			

M:\Y-Team\Clark County Betts Bridge\Window files\FRAMING PLAN.WND

DATE	REVISION	BY	APP'D

REGION NO.	STATE	FED. AID PROJ. NO.	SHEET NO.	TOTAL SHEETS
10	WASH.	BRM-4231(004)		
JOB NUMBER				

GARY E. C. MINNS — STATE OF WASHINGTON — 10798 — REGISTERED PROFESSIONAL ENGINEER — EXPIRES 1/22/06

BRIDGE AND STRUCTURES OFFICE

JUGESH KAPUR — STATE OF WASHINGTON — 25400 — REGISTERED PROFESSIONAL ENGINEER — EXPIRES 5/19/06

Washington State Department of Transportation

SALMON CREEK AVENUE
BETTS BRIDGE REPLACEMENT

FRAMING PLAN

BRIDGE SHEET NO. 14

SHEET 85 OF 105 SHEETS

Thu Nov 04 15:11:58 2004

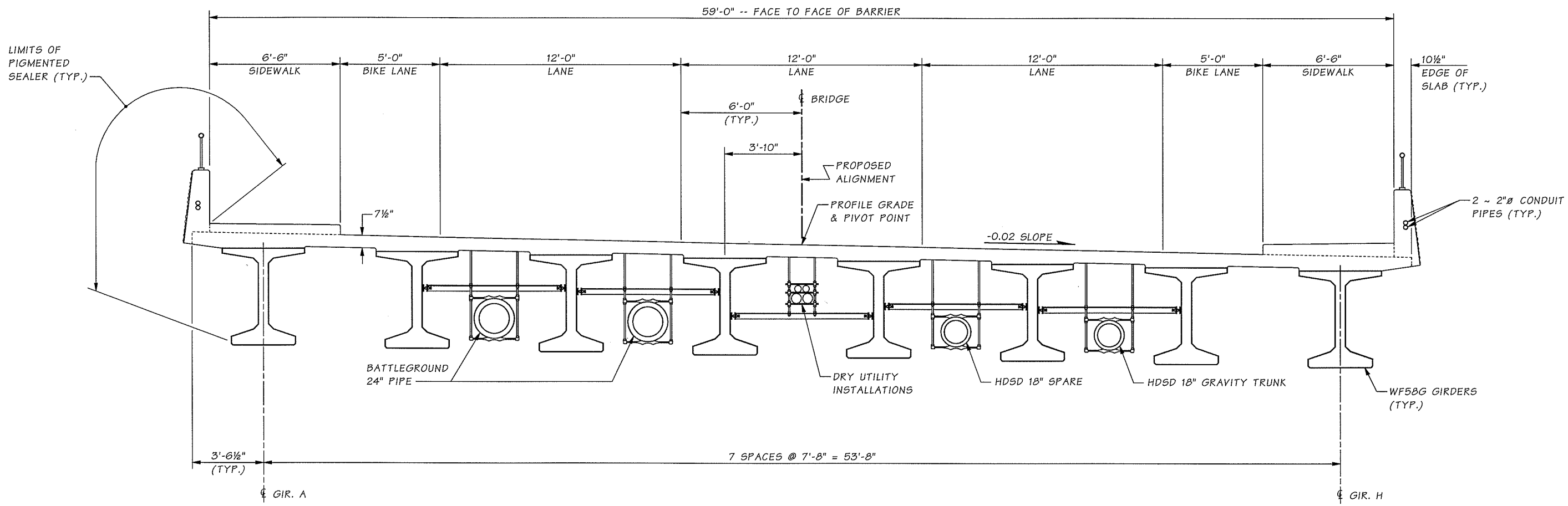

TYPICAL SECTION

LOOKING AHEAD ON STATION NEAR ℄ SPAN

FOR UTILITY SUPPORTS SEE BR. SHEETS 32 & 33

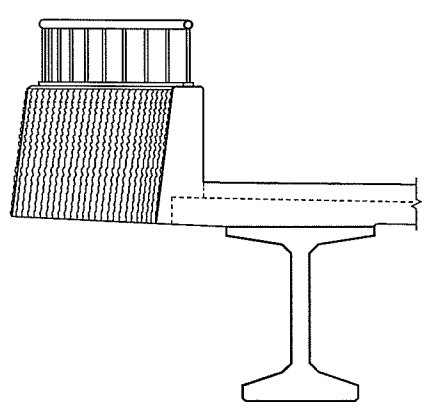

SECTION NEAR OBSERVATION AREA

SR 999 JOB NO. _____ SHEET 15

Bridge Design Engr.	Kapur, J		M:\Y-Team\Clark County Betts Bridge\Window files\TYP SECTION.WND
Supervisor	Kapur, J		
Designed By	MINNS, GEC	11/04	
Checked By	Mizumori, A	11/04	
Detailed By	Evans, P.D.	11/04	
Bridge Projects Engr.			
Prelim. Plan By			
Architect/Specialist			

DATE	REVISION	BY	APP'D

REGION NO.	STATE	FED. AID PROJ. NO.	SHEET NO.	TOTAL SHEETS
10	WASH.	BRM-4231(004)		
JOB NUMBER				

GARY E.C. MINNS — STATE OF WASHINGTON — 10796 — REGISTERED PROFESSIONAL ENGINEER — EXPIRES 1/22/06

BRIDGE AND STRUCTURES OFFICE

JUGESH KAPUR — STATE OF WASHINGTON — 25400 — REGISTERED PROFESSIONAL ENGINEER — EXPIRES 5/19/06

Washington State Department of Transportation

SALMON CREEK AVENUE
BETTS BRIDGE REPLACEMENT

TYPICAL ROADWAY SECTION

BRIDGE SHEET NO. 15

SHEET 86 OF 105 SHEETS

Thu Nov 04 15:12:09 2004

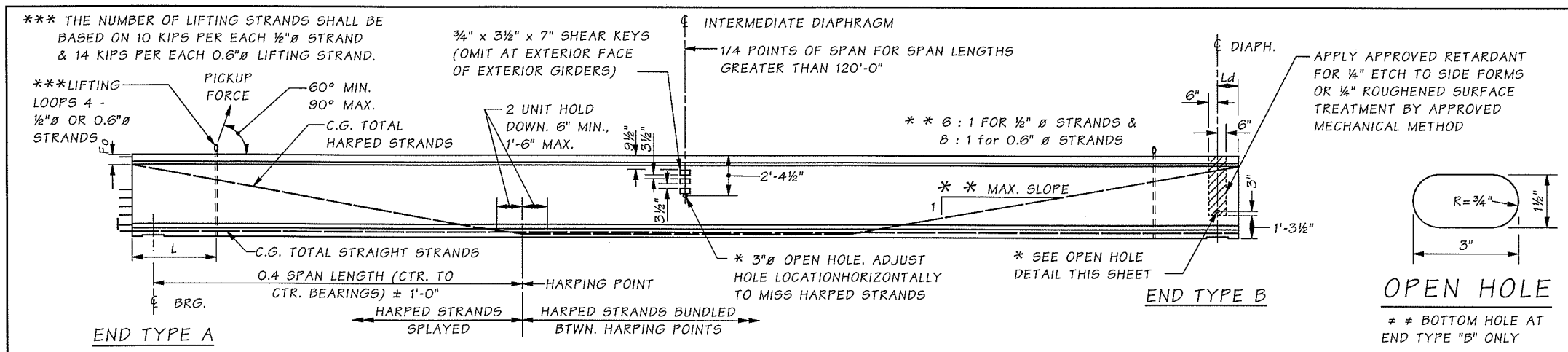

GIRDER ELEVATION

OPEN HOLE

≠ ≠ BOTTOM HOLE AT END TYPE "B" ONLY

* OMIT HOLES AND PLACE INSERTS ON THE INTERIOR FACE OF EXTERIOR GIRDERS. PLACE HOLES AND INSERTS PARALLEL TO SKEW. INSERTS SHALL BE 1" BURKE HI-TENSILE, LANCASTER MALLEABLE, DAYTON-SUPERIOR F-62 FLARED THIN SLAB (1" x 4⅝") FERRULE OR APPROVED EQUAL. (TYP.)

NOTES:

1. ALL DETAILS ON THIS SHEET ARE FOR PRETENSIONED DESIGN ONLY.
2. PLAN LENGTH SHALL BE INCREASED AS NECESSARY TO COMPENSATE FOR SHORTENING DUE TO PRESTRESS AND SHRINKAGE.
3. ALL STRANDS SHALL BE 0.6" ø LOW RELAXATION STRANDS (AASHTO M203 GRADE 270.)
4. FOR END TYPES A, C AND D, CUT ALL STRANDS FLUSH WITH THE GIRDER ENDS AND PAINT WITH AN APPROVED EPOXY RESIN, EXCEPT FOR EXTENDED STRANDS AS SHOWN. FOR END TYPES B AND E CUT ALL STRANDS 1" BELOW CONCRETE SURFACE AND GROUT WITH AN APPROVED EPOXY GROUT.
5. EXTENDED STRANDS AND BARS ARE PARALLEL TO GIRDER.
6. LIFTING BARS SHALL BE 1⅜ INCH DIAMETER HIGH STRENGTH THREADED BARS (AASHTO M275 GRADE 150 MINIMUM.) LIFTING HARDWARE THAT CONNECTS TO THE THREADED BARS SHALL BE DESIGNED, DETAILED AND FURNISHED BY THE CONTRACTOR. LIFTING FORCES ON THREADED BARS SHALL BE WITHIN 10 DEGRESS OF PERPENDICULAR TO THE TOP OF THE GIRDER. ALTERNATE LIFTING CONFIGURATIONS MAY BE SUBMITTED BY THE CONTRACTOR IN ACCORDANCE WITH SECTION 6-02.3(25)L OF THE STANDARD SPECIFICATIONS.
7. EXTRA CAUTION MUST BE EXERCISED IN HANDLING AND PLACING GIRDERS. ALL GIRDERS SHALL BE CHECKED BY THE CONTRACTOR TO ENSURE THAT THEY ARE BRACED ADEQUATELY TO PREVENT TIPPING AND TO CONTROL LATERAL BENDING DURING SHIPPING. ONCE ERECTED, ALL GIRDERS SHALL BE BRACED TO PREVENT TIPPING UNTIL THE INTERMEDIATE DIAPHRAGMS ARE CAST AND CURED.
8. THE TOP SURFACE OF THE GIRDER FLANGE SHALL BE ROUGHENED IN ACCORDANCE WITH SECTION 6-02.3(25)H OF THE STANDARD SPECIFICATIONS.
9. FORMS FOR BEARING PAD RECESSES SHALL BE CONSTRUCTED AND FASTENED IN SUCH A MANNER AS TO NOT CAUSE DAMAGE TO THE GIRDER DURING THE STRAND RELEASE OPERATION.
10. FOR SAWTEETH DETAILS SEE WF74G GIRDER DETAILS 2 OF 3.
11. TEMPORARY STRANDS ARE PRETENSIONED OR POST-TENSIONED. IF PRETENSIONED, THESE TEMPORARY STRANDS SHALL BE UNBONDED OVER ALL BUT THE END 10 FEET OF THE GIRDER LENGTH. AS AN ALTERNATE, TEMPORARY STRANDS MAY BE POST TENSIONED BEFORE THE GIRDER IS LIFTED FROM THE FORM. TEMPORARY STRANDS SHALL BE TENSIONED INITIALLY TO 0.75 F_{pu}. TEMPORARY STRANDS SHALL BE CUT AFTER ALL GIRDERS ARE ERECTED, BUT BEFORE INTERMEDIATE DIAPHRAGMS ARE CAST.

DIAPHRAGM TYPE	END TYPE	BEARING RECESS	X	Y	Z	SAWTEETH
END DIAPH. ON GIRDER	A	YES	1'-10"	1'-6"	9"	YES

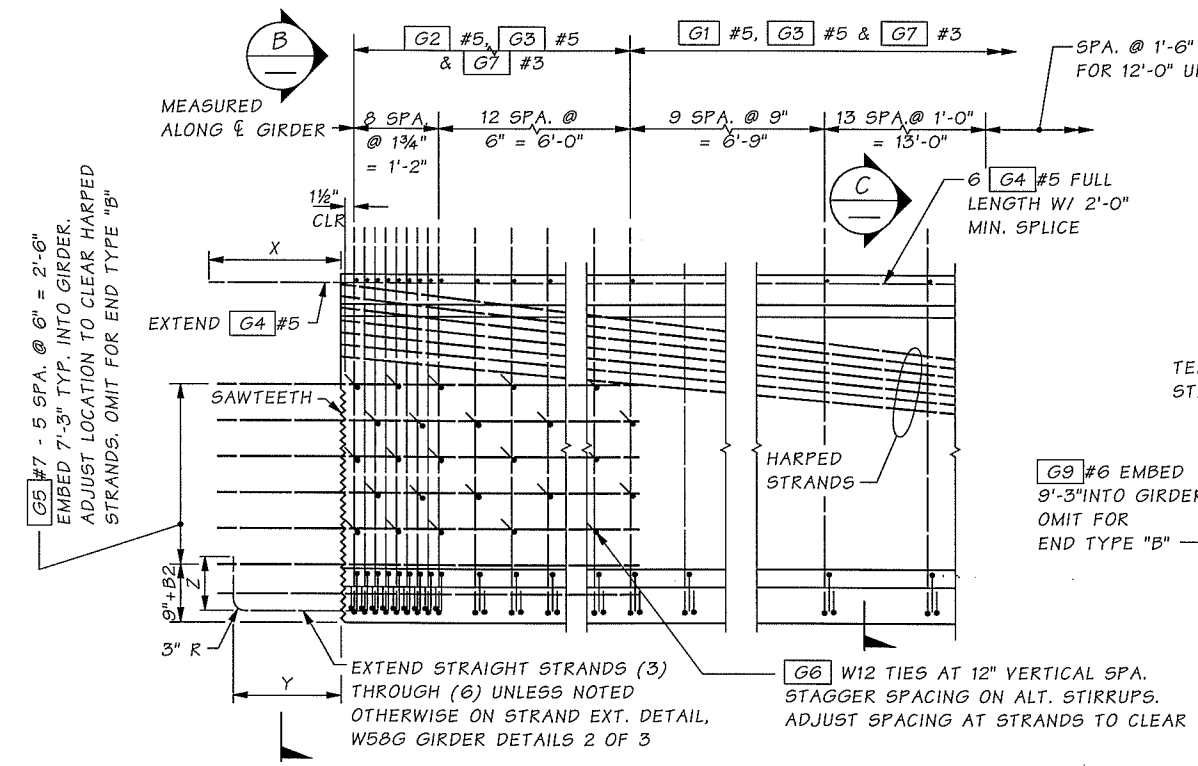

TYPICAL END ELEVATION

END TYPE C SHOWN, OTHER END TYPES SIMILAR

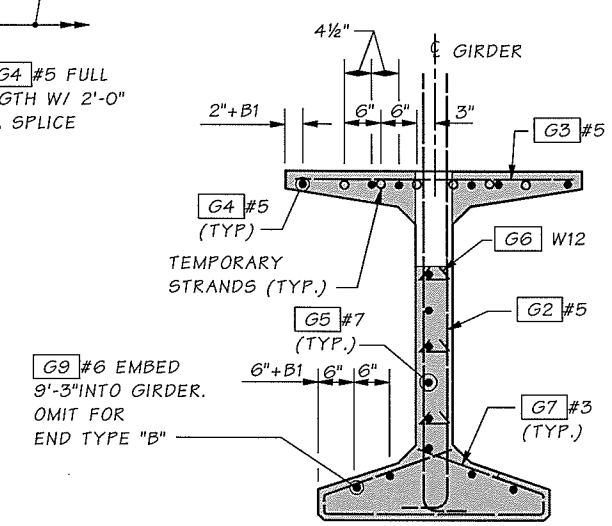

VIEW B

SAWTEETH SHOWN BY SHADED AREA.

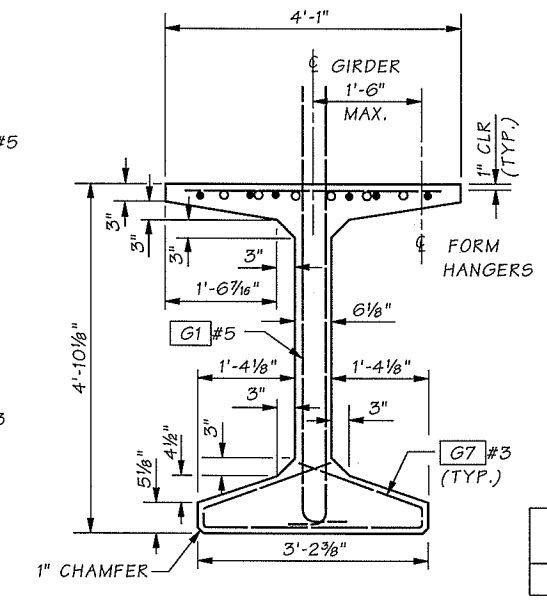

SECTION C

MARK	LOCATION	SIZE	BENDING DIAGRAM (ALL DIMENSIONS ARE OUT TO OUT)
G1	GIRDER STIRRUPS	5	
G2	GIRDER END STIRRUPS	5	
G3	GIRDER TOP FLANGE	5	STR.
G4	GIRDER LONGIT. FULL LENGTH	5	STR.
G5	GIRDER END LONGIT.	7	STR.
G6	GIRDER END TIES	W12	≠
G7	GIRDER BOT. FLANGE TIES	3	
G9	GIRDER END LONGIT.	6	STR.

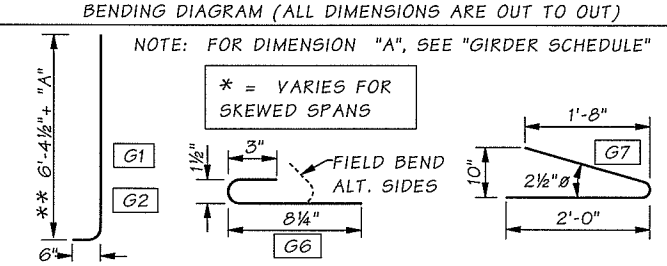

≠ #3 OR #4 MAY BE SUBSTITUTED.FIELD BENDING IS OPTIONAL. ** SHALL BE CHECKED FOR EFFECT OF RDWY VERTICAL CURVE

Bridge Design Engr.	Kapur, J		
Supervisor	Kapur, J		
Designed By	MINNS, GEC	11/04	
Checked By	Mizumori, A	11/04	
Detailed By	Evans, P.D.	11/04	
Bridge Projects Engr.			
Prelim. Plan By			
Architect/Specialist			

M:\Y-Team\Clark County Betts Bridge\Window files\WF58G DET1.WND

DATE	REVISION	BY	APP'D

REGION NO.	STATE	FED. AID PROJ. NO.	SHEET NO.	TOTAL SHEETS
10	WASH.	BRM-4231(004)		
JOB NUMBER				

Thu Nov 04 15:12:12 2004

GARY E.C. MINNS — STATE OF WASHINGTON — 10796 — REGISTERED PROFESSIONAL ENGINEER — EXPIRES 1/22/06

BRIDGE AND STRUCTURES OFFICE

JUGESH KAPUR — STATE OF WASHINGTON — 25400 — REGISTERED PROFESSIONAL ENGINEER — EXPIRES 5/19/06

Washington State Department of Transportation

SALMON CREEK AVENUE
BETTS BRIDGE REPLACEMENT

WF58G GIRDER DETAILS 1 OF 3

BRIDGE SHEET NO. 16

SHEET 87 OF 105 SHEETS

SR 999 JOB NO. ____ SHEET 16

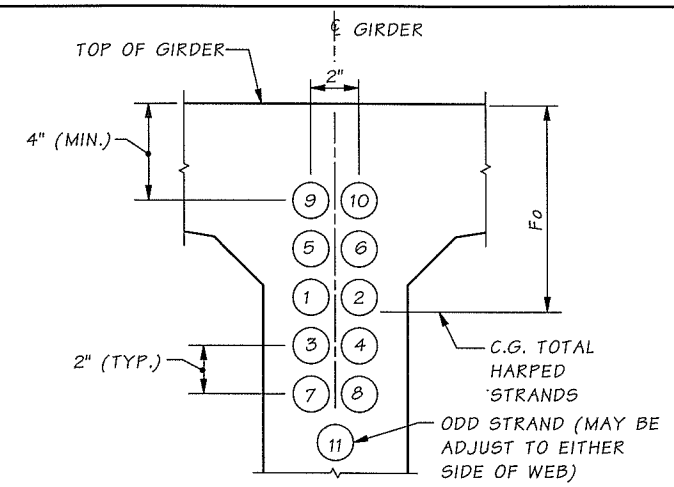

STRAND PATTERN AT GIRDER END

HARPED STRAND LOCATION SEQUENCE SHALL BE AS SHOWN (1), (2) ETC.

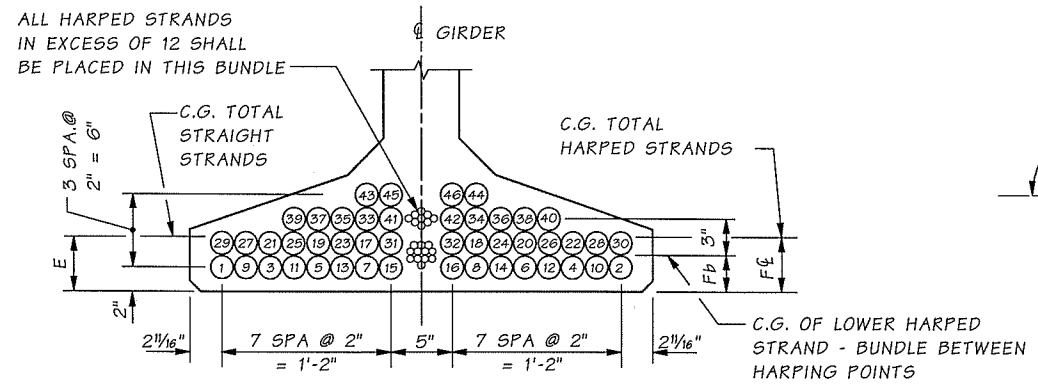

STRAND PATTERN AT ℄ SPAN

STRAIGHT STRAND LOCATION SEQUENCE SHALL BE AS SHOWN (1), (2) ETC.

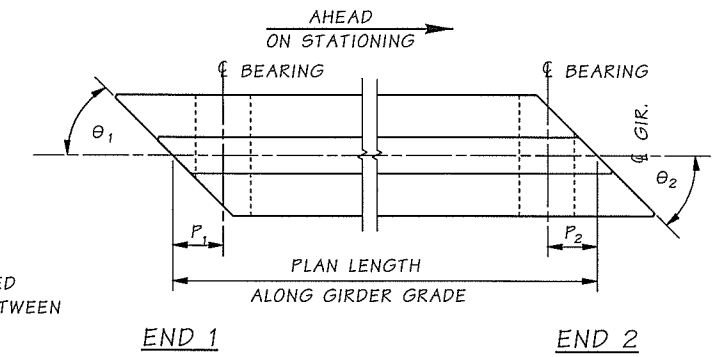

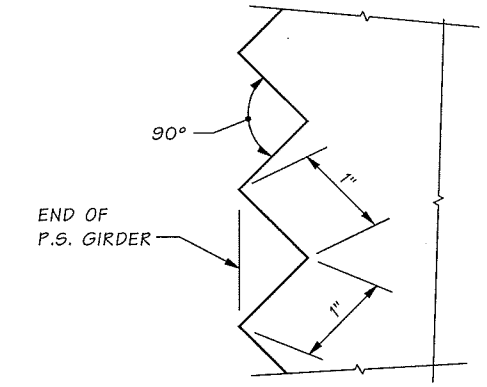

SAWTOOTH DETAILS

SAWTEETH ARE FULL WIDTH - USE SAWTEETH KEYS FROM BOTTOM OF BOTTOM FLANGE TO BOTTOM OF LOWEST HARPED STRAND AS WELL AS TOP FLANGE ADJACENT TO HARPED STRANDS AS SHOWN IN VIEW B - WF74G GIRDER DETAILS 1 OF 3

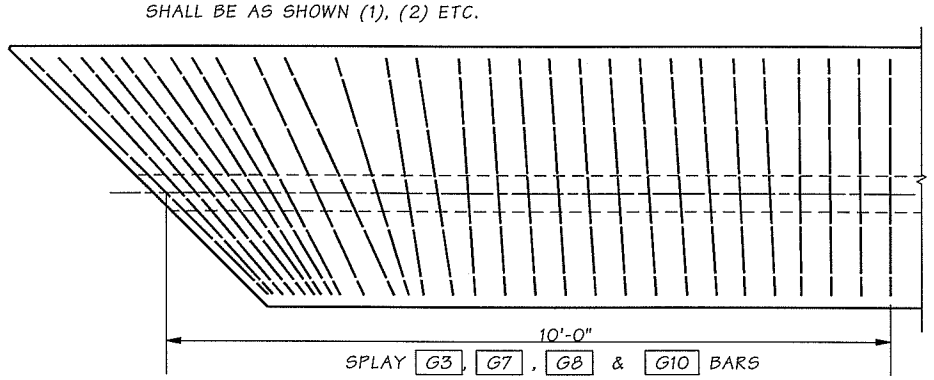

TRANSVERSE REINFORCING SKEWED ENDS

ONLY TRANSVERSE REINF. SHOWN

GIRDER SCHEDULE

DIMENSION "A" AT ℄ BEARINGS = 11¾"

BASED ON GIRDER DEFLECTION = "D" AT TIME OF SLAB PLACEMENT (120 DAYS)

SPAN	GIRDER	END 1 TYPE	END 2 TYPE	L	θ_1	θ_2	P_1	P_2	PLAN LENGTH (ALONG GIRDER GRADE)	MIN. CONC. COMPR. STRENGTH @ FINAL F'C (KSI)	MIN. CONC. COMPR. STRENGTH @ RELEASE F'CI (KSI)	HARPED NO. OF STRANDS	HARPED JACKING FORCE (KIPS)	STRAIGHT NO. OF STRANDS	STRAIGHT JACKING FORCE (KIPS)	TEMPORARY NO. OF STRANDS	TEMPORARY JACKING FORCE (KIPS)	LOCATION OF C.G. STRANDS (IN.) E	F℄	Fb	Fo	C (IN.)	D (IN.)
1	ALL	A	A	1'-6"	70	70	1'-6"	1'-6"	127'-9¼"	9.0	8.0	23	1011	34	1494	6	264	3.18	4.43	3.00	14.52	2.844	4.283

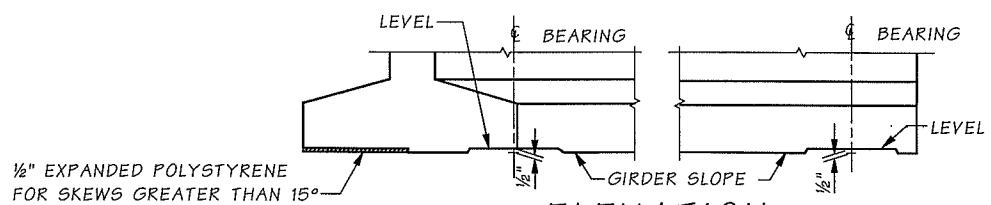

ELEVATION

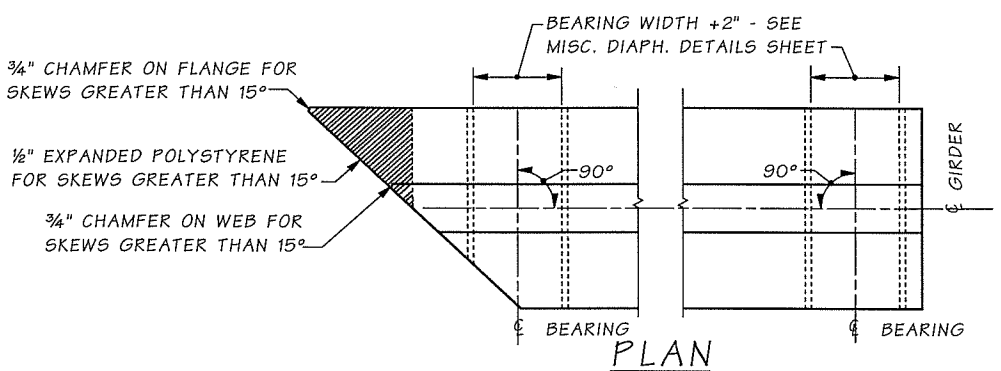

PLAN

BEARING RECESS DETAIL

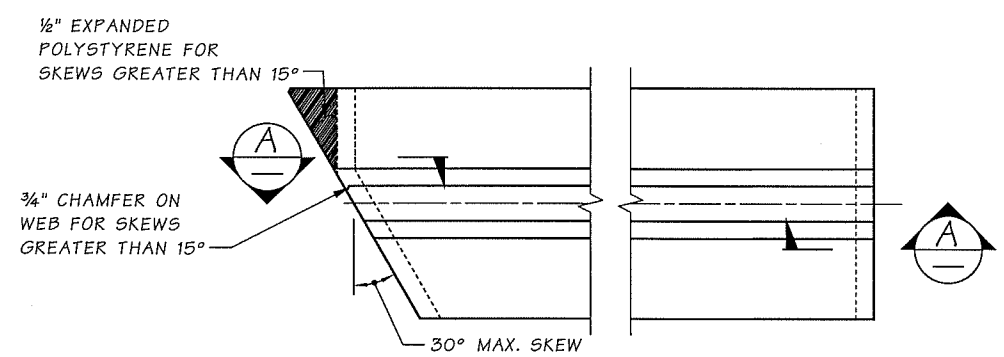

PLAN

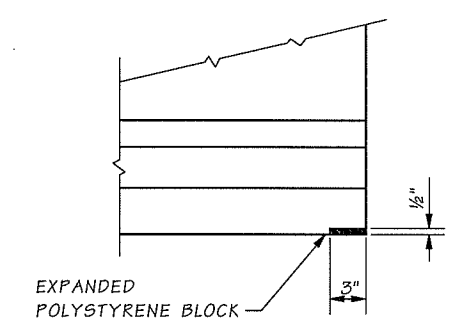

SECTION A

BOTTOM FLANGE SPALL PROTECTION

END TYPES "C" INTERMEDIATE HINGE DIAPHRAGM AND END TYPE "D" INTEREMEDIATE FIXED DIAPHRAGM

Bridge Design Engr.	Kapur, J		
Supervisor	Kapur, J		
Designed By	MINNS, GEC	11/04	
Checked By	Mizumori, A	11/04	
Detailed By	Evans, P.D.	11/04	
Bridge Projects Engr.			
Prelim. Plan By			
Architect/Specialist			

M:\Y-Team\Clark County Betts Bridge\Window files\WF58G DET2.WND

DATE	REVISION	BY	APP'D

REGION NO.	STATE	FED. AID PROJ. NO.	SHEET NO.	TOTAL SHEETS
10	WASH.	BRM-4231(004)		
JOB NUMBER				

GARY E. C. MINNS, STATE OF WASHINGTON, 10798, REGISTERED PROFESSIONAL ENGINEER — EXPIRES 1/22/06

BRIDGE AND STRUCTURES OFFICE

JUGESH KAPUR, STATE OF WASHINGTON, 25400, REGISTERED PROFESSIONAL ENGINEER — EXPIRES 5/19/06

Washington State Department of Transportation

SALMON CREEK AVENUE
BETTS BRIDGE REPLACEMENT

WF58G GIRDER DETAILS 2 OF 3

BRIDGE SHEET NO. 17

SHEET 88 OF 105 SHEETS

SR 999 JOB NO. ____ SHEET 17

Thu Nov 04 15:12:13 2004

TEMPORARY STRAND CUTTING SEQUENCE

1. ERECT AND BRACE GIRDERS.
2. REMOVE EXPANDED POLYSTYRENE IN 2" X 2" RECESSES IN TOP FLANGE OF GIRDERS.
3. CUT STRAND AND PLASTIC SLEEVE IN 2" X 2" RECESS.
4. REMOVE ALL MOISTURE IN RECESS PRIOR TO FILLING RECESS WITH GROUT.
5. CAST INTERMEDIATE & END DIAPHRAGMS.
6. PLACE DECK CONCRETE.
7. SEE SHEET WF58G GIRDER DETAILS 3 OF 3 FOR 2" RECESS BLOCKOUT DETAILS.

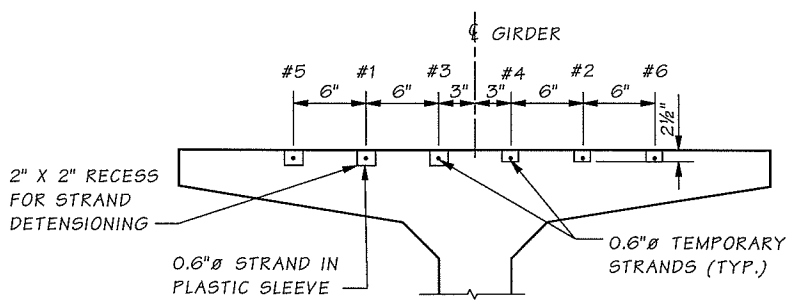

TEMPORARY STRAND BLOCKOUT DETAIL

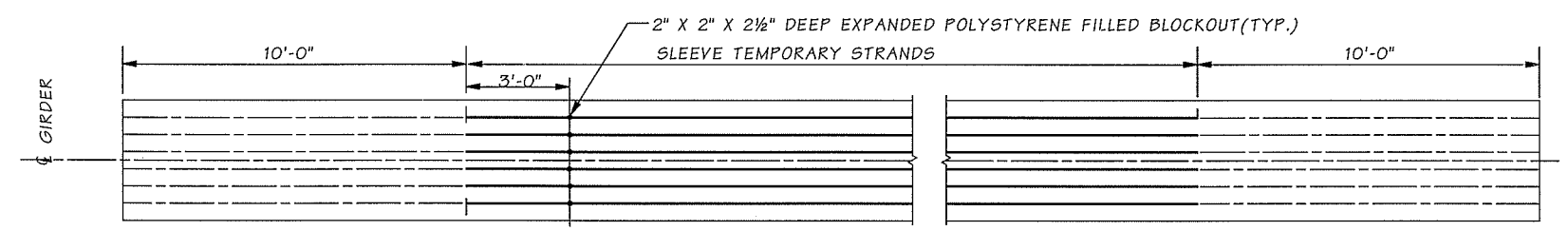

PLAN VIEW OF TEMPORARY STRANDS

SR 999 JOB NO. _____ SHEET 18

Bridge Design Engr.	Kapur, J		M:\Y-Team\Clark County Betts Bridge\Window files\WF58G DET3.WND
Supervisor	Kapur, J		
Designed By	MINNS, GEC	11/04	
Checked By	Mizumori, A	11/04	
Detailed By	Evans, P.D.	11/04	
Bridge Projects Engr.			
Prelim. Plan By			
Architect/Specialist			

DATE	REVISION	BY	APP'D

REGION NO.	STATE	FED. AID PROJ. NO.	SHEET NO.	TOTAL SHEETS
10	WASH.	BRM-4231(004)		
JOB NUMBER				

Thu Nov 04 15:12:14 2004

GARY E.C. MINNS — STATE OF WASHINGTON — 10796 — REGISTERED PROFESSIONAL ENGINEER — EXPIRES 1/22/06

BRIDGE AND STRUCTURES OFFICE

JUGESH KAPUR — STATE OF WASHINGTON — 25400 — REGISTERED PROFESSIONAL ENGINEER — EXPIRES 5/19/06

Washington State Department of Transportation

SALMON CREEK AVENUE
BETTS BRIDGE REPLACEMENT

WF58G GIRDER
DETAILS 3 OF 3

BRIDGE SHEET NO. 18

SHEET 89 OF 105 SHEETS

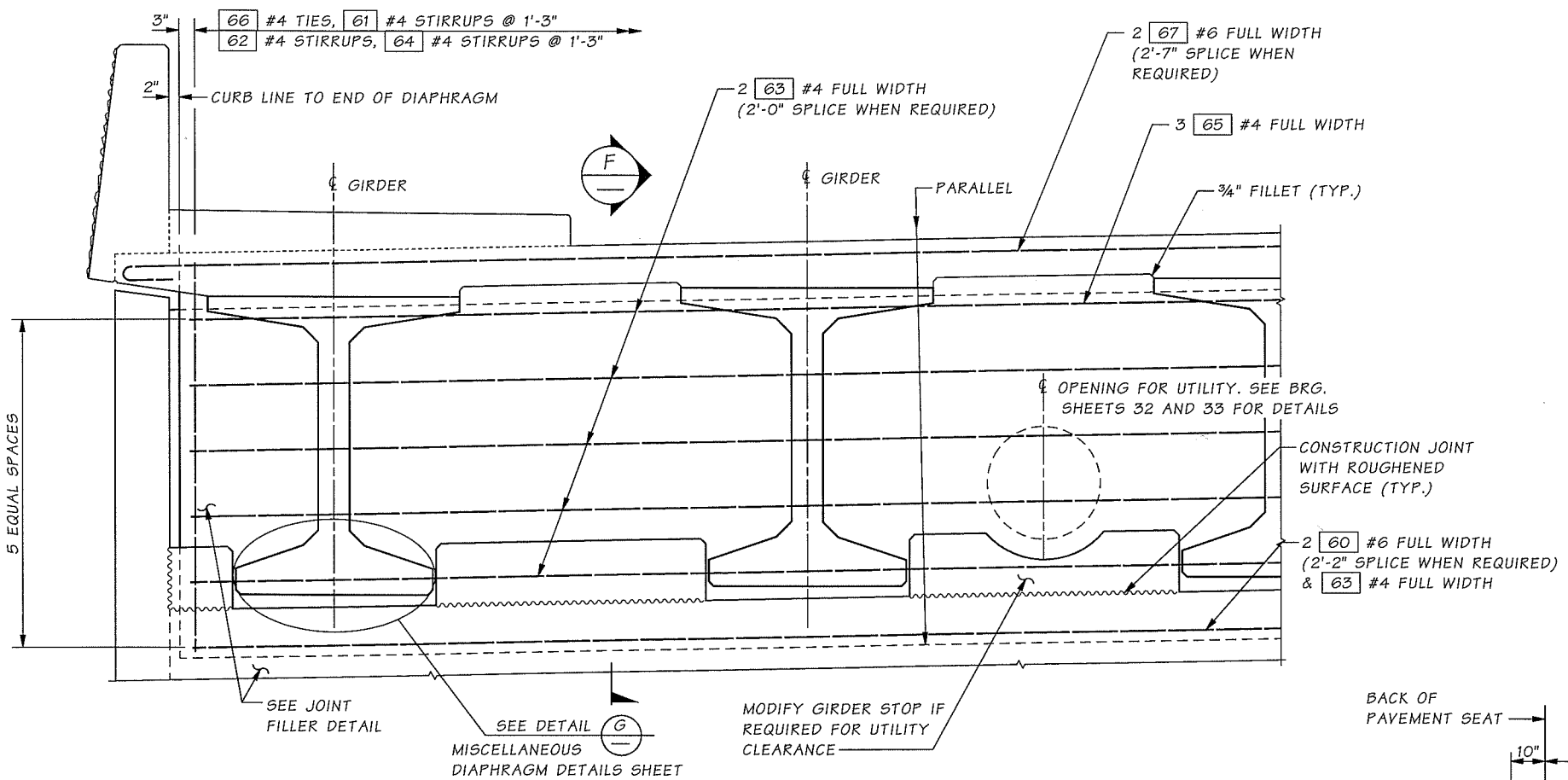

TYPICAL END TYPE "A" DIAPHRAGM AT END PIERS

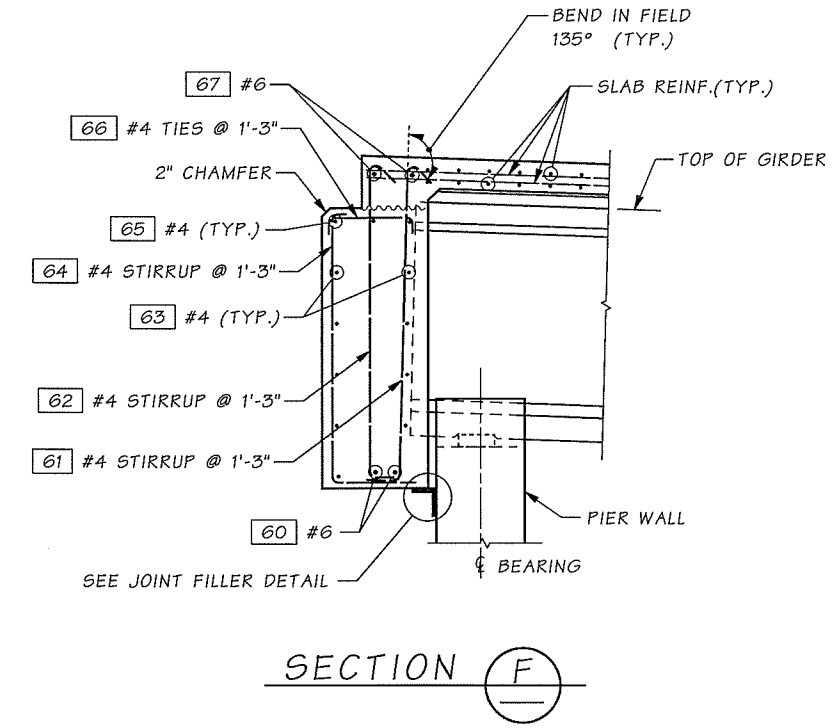

SECTION F

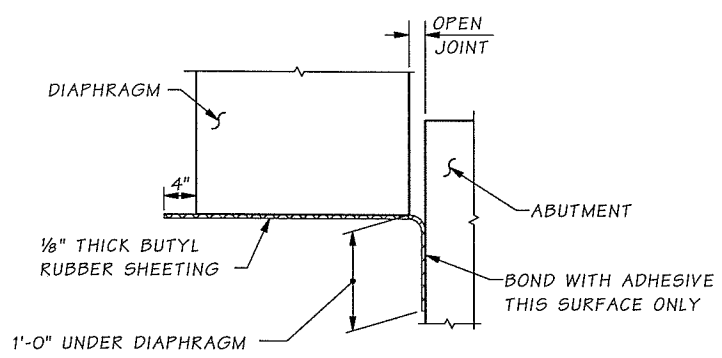

ELEVATION BUTYL RUBBER @ DIAPHRAGM

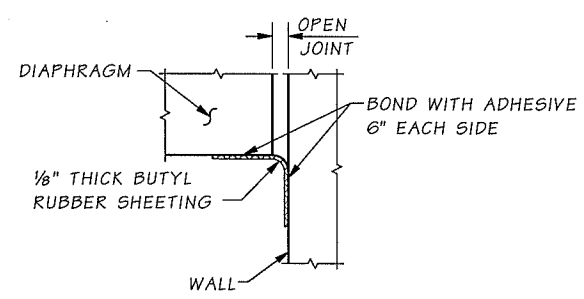

PLAN VIEW BUTYL RUBBER @ VERTICAL JOINTS

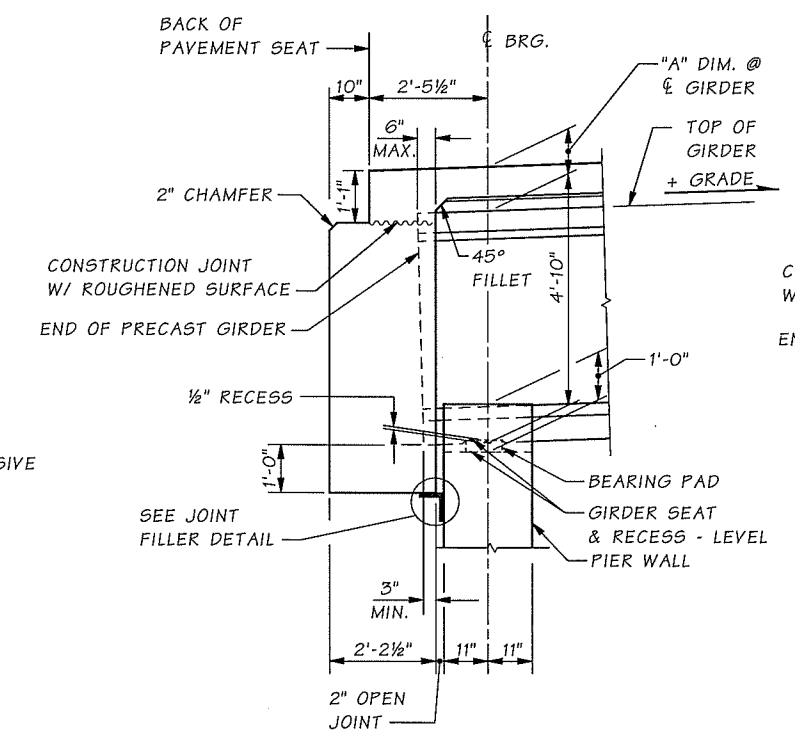

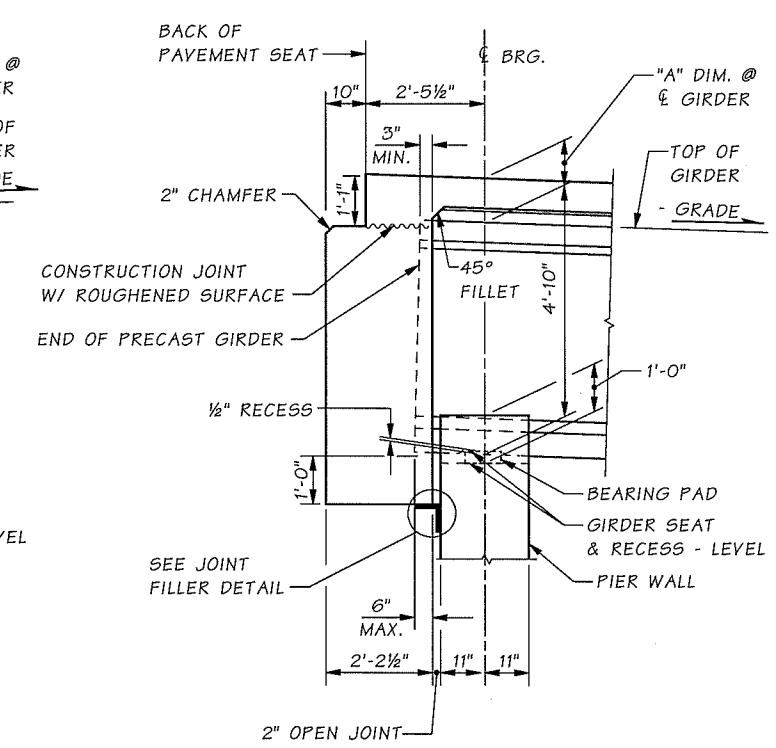

END DIAPHRAGM GEOMETRY

SECTIONS THROUGH END DIAPHRAGMS AT END PIERS
SEE "GIRDER DETAILS" SHEET FOR DIMENSION "A".
ALL LONGITUDINAL DIMENSIONS ARE NORMAL TO SKEW.

NOTE:

1. GIRDERS SHALL BE HELD RIGIDLY IN PLACE WHEN DIAPHRAGMS ARE PLACED.
2. REINFORCING BAR SHALL BE THREADED THROUGH HOLES IN GIRDERS PRIOR TO PLACING OF EXTERIOR GIRDERS. SEE PLANS FOR "TRAFFIC BARRIER" DIMENSIONS AND LOCATION. SEE "GIRDER DETAILS" SHEET FOR DIMENSION "A".
3. END DIAPHRAGM MAY BE CAST ON GRADE. IF SO, THE UPPER LEG OF THE JOINT FILLER SHALL FORM THE BOTTOM FACE FULL WIDTH.
4. JOINT FILLER TYPE 1 SHALL BE USED TO COVER ALL VERTICAL END DIAPHRAGM JOINTS. EITHER JOINT FILLER TYPE 1 OR JOINT FILLER TYPE 2 SHALL BE USED TO COVER ALL HORIZONTAL END DIAPHRAGM JOINTS.

Bridge Design Engr.	Kapur, J		M:\Y-Team\Clark County Betts Bridge\Window files\W58G END DIAPH.WND
Supervisor	Kapur, J		
Designed By	MINNS, GEC	11/04	
Checked By	Mizumori, A	11/04	
Detailed By	Evans, P.D.	11/04	
Bridge Projects Engr.			
Prelim. Plan By			
Architect/Specialist			

DATE	REVISION	BY	APP'D

REGION NO.	STATE	FED. AID PROJ. NO.	SHEET NO.	TOTAL SHEETS
10	WASH.	BRM-4231(004)		
JOB NUMBER				

GARY E.C. MINNS — STATE OF WASHINGTON — 10796 — REGISTERED PROFESSIONAL ENGINEER — EXPIRES 1/22/06

BRIDGE AND STRUCTURES OFFICE

JUGESH KAPUR — STATE OF WASHINGTON — 25400 — REGISTERED PROFESSIONAL ENGINEER — EXPIRES 5/19/06

Washington State Department of Transportation

SALMON CREEK AVENUE
BETTS BRIDGE REPLACEMENT

WF58G END DIAPHRAGM ON GIRDER DETAILS

BRIDGE SHEET NO. 19

SHEET 90 OF 105 SHEETS

SR 999 JOB NO. ____ SHEET 19

Thu Nov 04 15:12:11 2004

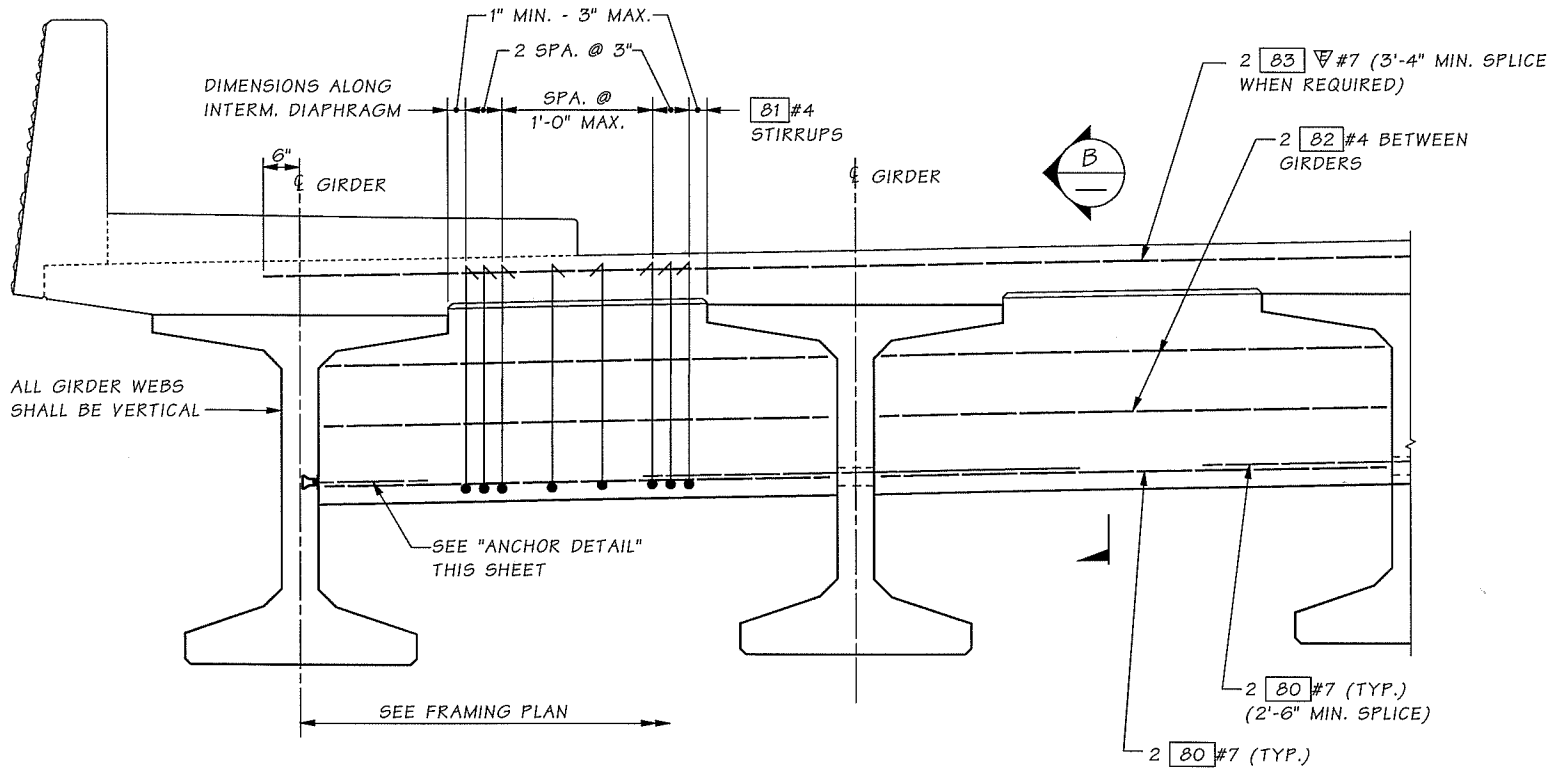

TYPICAL INTERMEDIATE DIAPHRAGM

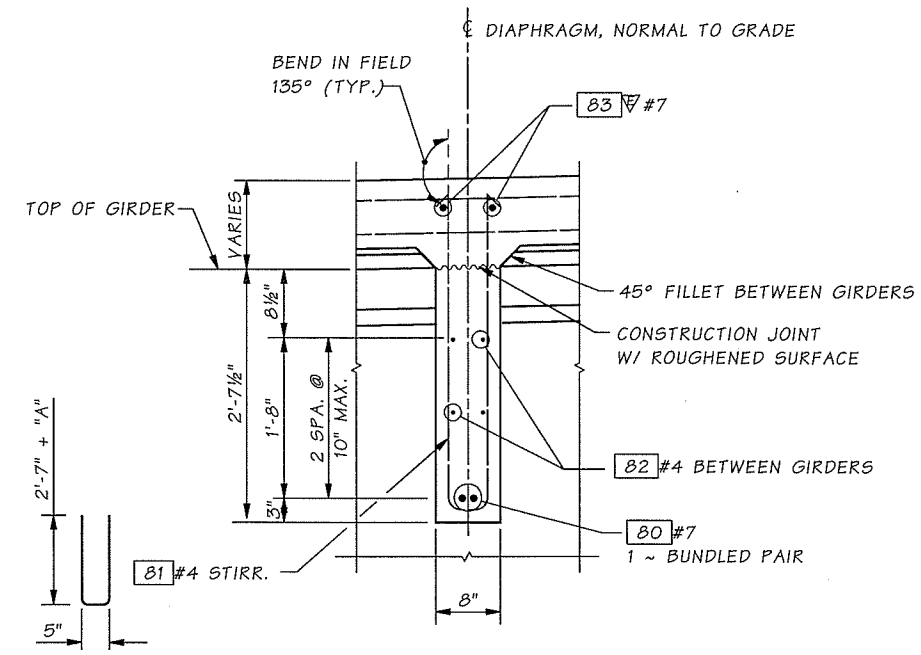

SECTION B

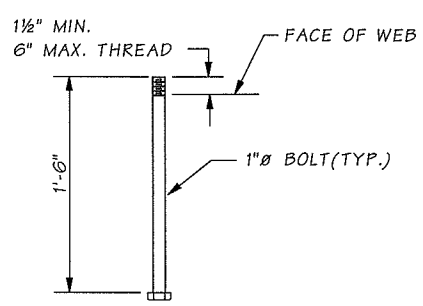

ANCHOR DETAIL

A.S.T.M. A-307

NOTE:

GIRDERS SHALL BE HELD RIGIDLY IN PLACE WHEN DIAPHRAGMS ARE PLACED. REINFORCING BAR SHALL BE THREADED THROUGH HOLES IN GIRDERS PRIOR TO PLACING OF EXTERIOR GIRDERS. SEE "GIRDER DETAILS" SHEET FOR DIMENSION "A".

Bridge Design Engr.	Kapur, J		M:\Y-Team\Clark County Betts Bridge\Window files\W58G INT DIAPH DETS.WND
Supervisor	Kapur, J		
Designed By	MINNS, GEC	11/04	
Checked By	Mizumori, A	11/04	
Detailed By	Evans, P.D.	11/04	
Bridge Projects Engr.			
Prelim. Plan By			
Architect/Specialist			

DATE	REVISION	BY	APP'D

REGION NO.	STATE	FED. AID PROJ. NO.	SHEET NO.	TOTAL SHEETS
10	WASH.	BRM-4231(004)		
JOB NUMBER				

GARY E.C. MINNS — STATE OF WASHINGTON — 10706 — REGISTERED PROFESSIONAL ENGINEER — EXPIRES 1/22/06

BRIDGE AND STRUCTURES OFFICE

JUGESH KAPUR — STATE OF WASHINGTON — 25406 — REGISTERED PROFESSIONAL ENGINEER — EXPIRES 5/19/06

Washington State Department of Transportation

SALMON CREEK AVENUE
BETTS BRIDGE REPLACEMENT

WF58G INTERMEDIATE DIAPHRAGM DETAILS

BRIDGE SHEET NO. 20

SHEET 91 OF 105 SHEETS

SR 999 JOB NO. ____ SHEET 20

Thu Nov 04 15:12:12 2004

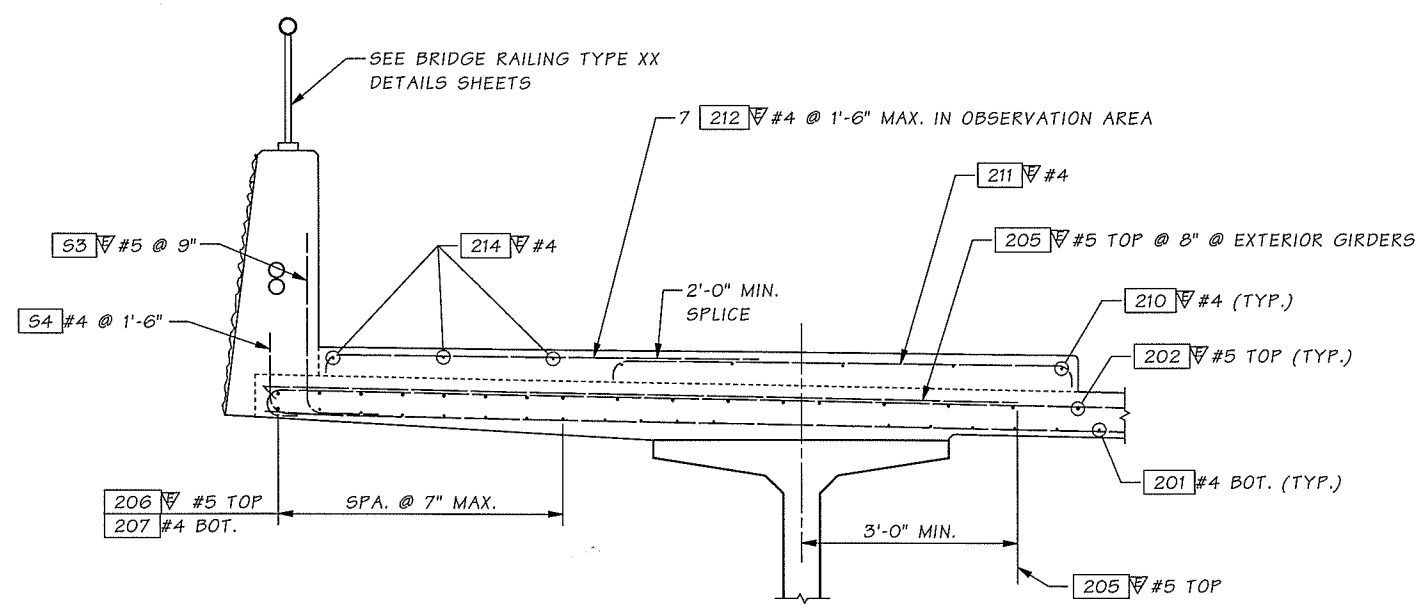

ROADWAY REINFORCING AT OBSERVATION AREA

UTILITIES NOT SHOWN FOR CLARITY

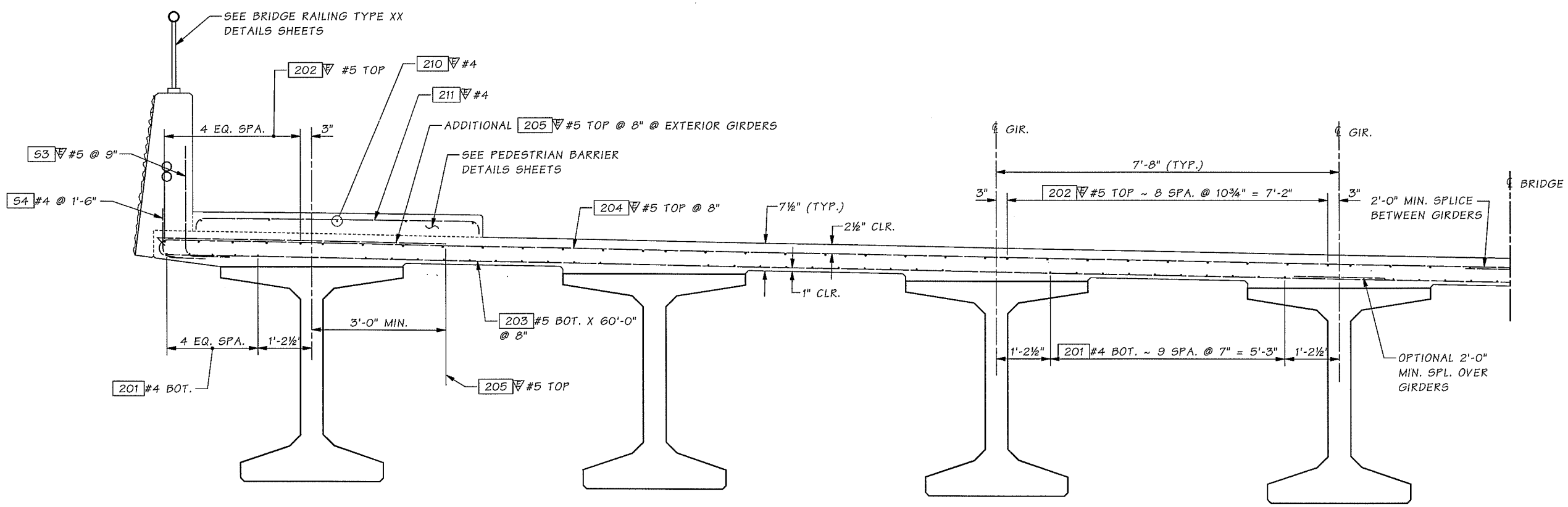

TYPICAL ROADWAY REINFORCING

UTILITIES NOT SHOWN FOR CLARITY

SR 999 JOB NO. SHEET 21

Bridge Design Engr.	Kapur, J		M:\Y-Team\Clark County Betts Bridge\Window files\SLAB SECT.WND								
Supervisor	Kapur, J										
Designed By	MINNS, GEC	11/04									
Checked By	Mizumori, A	11/04									
Detailed By	Evans, P.D.	11/04									
Bridge Projects Engr.											
Prelim. Plan By											
Architect/Specialist			DATE	REVISION	BY	APP'D					

REGION NO.	STATE	FED. AID PROJ. NO.	SHEET NO.	TOTAL SHEETS
10	WASH.	BRM-4231(004)		
JOB NUMBER				

GARY E.C. MINNS — STATE OF WASHINGTON — 10796 — REGISTERED PROFESSIONAL ENGINEER — EXPIRES 1/22/06

BRIDGE AND STRUCTURES OFFICE

JUGESH KAPUR — STATE OF WASHINGTON — 25400 — REGISTERED PROFESSIONAL ENGINEER — EXPIRES 5/19/06

Washington State Department of Transportation

SALMON CREEK AVENUE
BETTS BRIDGE REPLACEMENT

TYPICAL ROADWAY REINFORCING

BRIDGE SHEET NO. 21

SHEET 92 OF 105 SHEETS

Thu Nov 04 15:12:08 2004

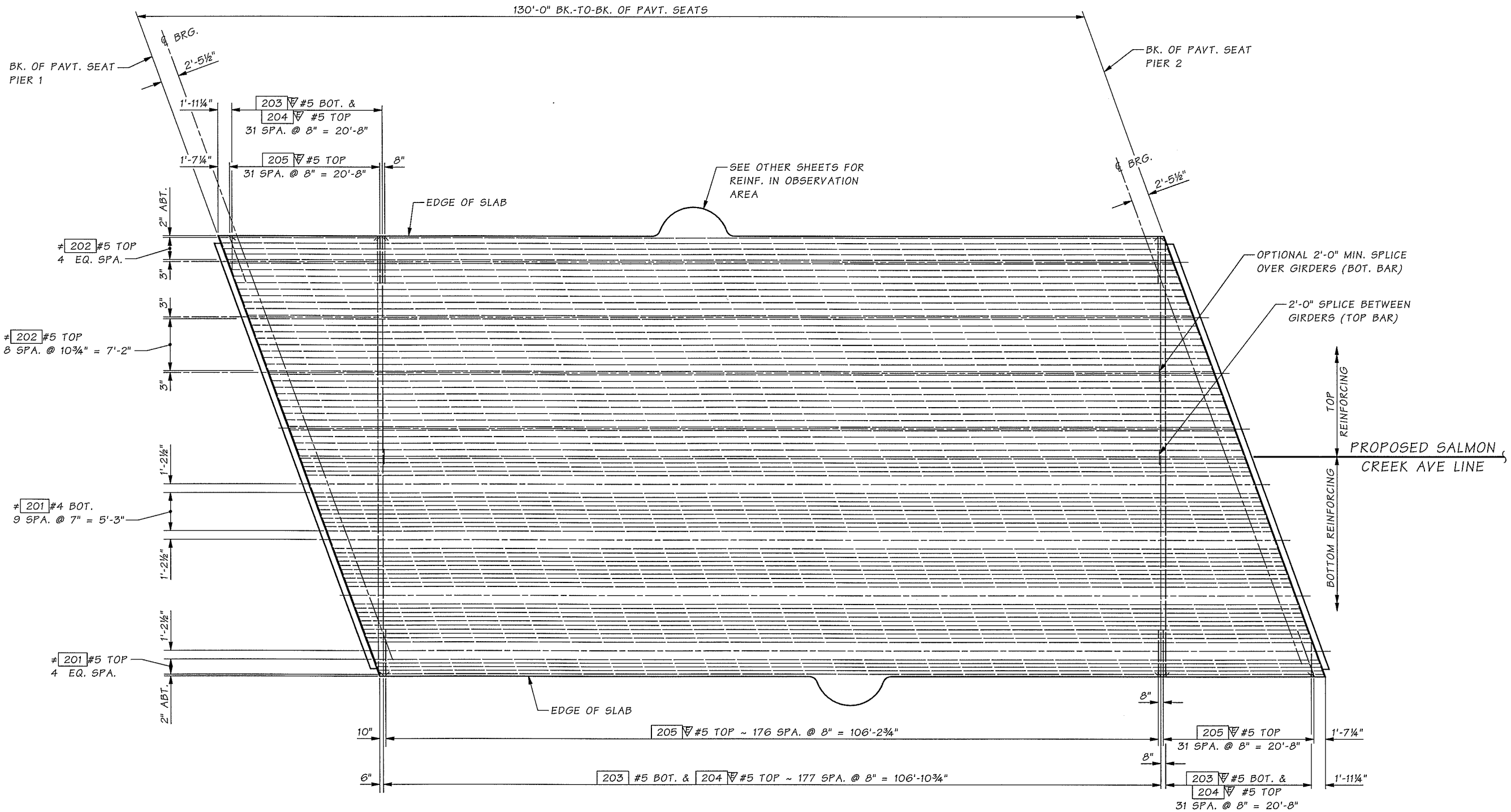

SLAB PLAN

PEDESTRIAN BARRIERS AND SIDEWALKS ARE NOT SHOWN.
SEE BR. SHEET XX FOR SCREED SETTING DIMENSIONS AND TEMPORARY STRAND CUTTING SEQUENCE.

≠ NUMBER AND LOCATION OF 2'-0" SPLICES AT CONTRACTORS OPTION. SPLICE LOCATION SHALL BE ADJUSTED SO NOT MORE THAN 50% OF REBAR IS SPLICED AT THE SAME LOCATION TO ℄ BRIDGE.

SR 999 JOB NO. _____ SHEET 22

Bridge Design Engr.	Kapur, J	
Supervisor	Kapur, J	
Designed By	MINNS, GEC	11/04
Checked By	Mizumori, A	11/04
Detailed By	Evans, P.D.	11/04
Bridge Projects Engr.		
Prelim. Plan By		
Architect/Specialist		

M:\Y-Team\Clark County Betts Bridge\Window files\SLAB PLAN.WND

DATE	REVISION	BY	APP'D

REGION NO.	STATE	FED. AID PROJ. NO.	SHEET NO.	TOTAL SHEETS
10	WASH.	BRM-4231(004)		
JOB NUMBER				

GARY E. C. MINNS — STATE OF WASHINGTON — 10796 — REGISTERED PROFESSIONAL ENGINEER — EXPIRES 1/22/06

BRIDGE AND STRUCTURES OFFICE

JUGESH KAPUR — STATE OF WASHINGTON — 25400 — REGISTERED PROFESSIONAL ENGINEER — EXPIRES 5/19/06

Washington State Department of Transportation

SALMON CREEK AVENUE
BETTS BRIDGE REPLACEMENT

SLAB REINFORCING

BRIDGE SHEET NO. 22

SHEET 93 OF 105 SHEETS

Thu Nov 04 15:12:08 2004

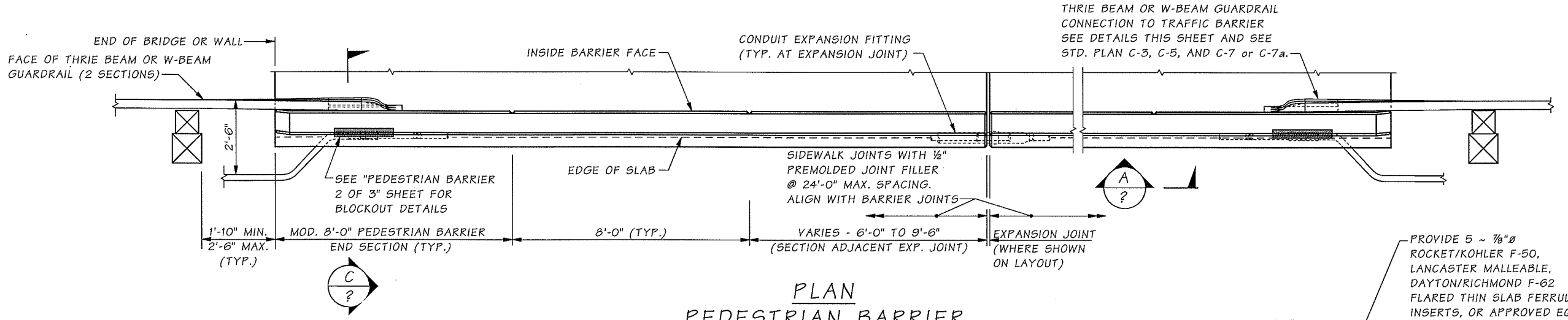

PLAN
PEDESTRIAN BARRIER

BARRIER CONTINUOUS BETWEEN ROADWAY EXPANSION JOINTS. CONSTRUCTION JOINTS WITH SHEAR KEYS ARE PERMISSIBLE AT DUMMY JOINT LOCATIONS. FORM JOINTS BETWEEN DUMMY JOINTS SHALL NOT BE PERMITTED.

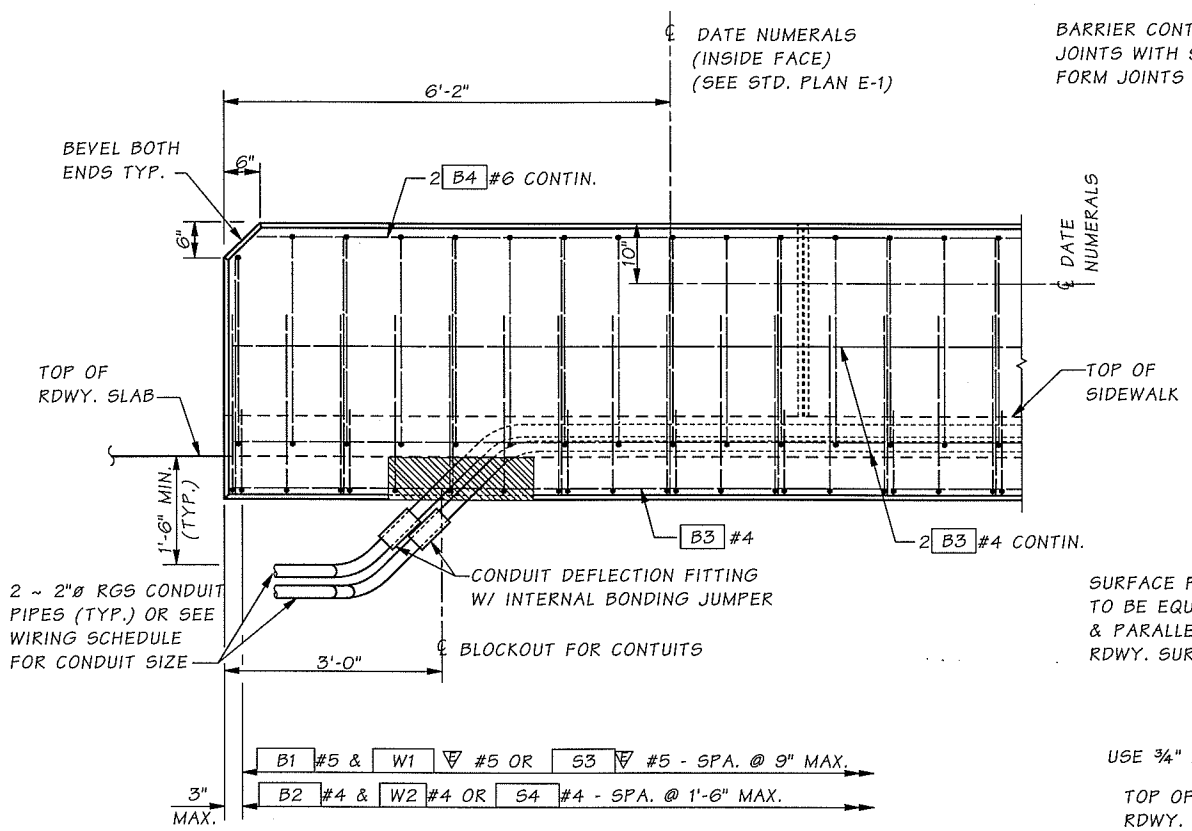

OUTSIDE ELEVATION
END OF MODIFIED PEDESTRIAN BARRIER

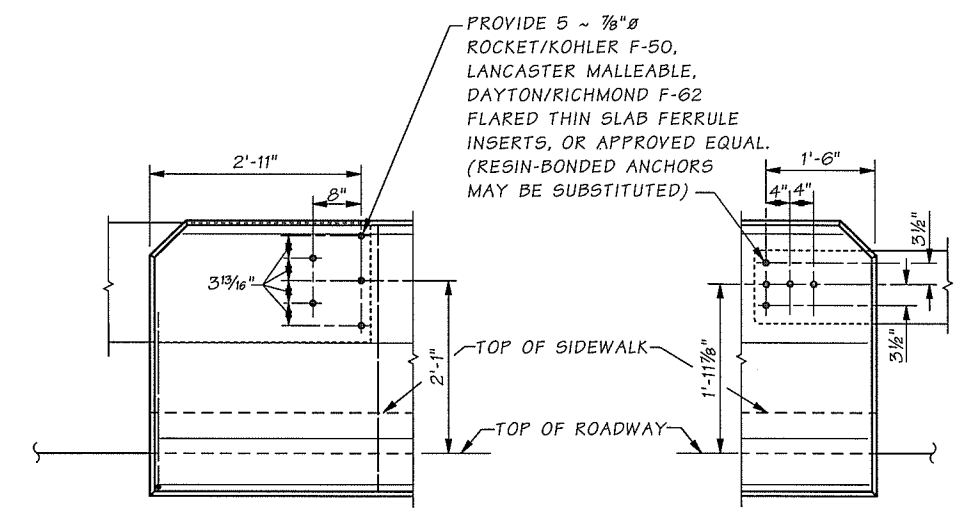

THRIE BEAM END SECTION DESIGN "F" (SEE STD. PLAN C-7a)

W-BEAM END SECTION DESIGN "F" (SEE STD. PLAN C-7)

OUTSIDE ELEVATION PEDESTRIAN BARRIER GUARDRAIL CONNECTION

(WHERE SHOWN ON LAYOUT)

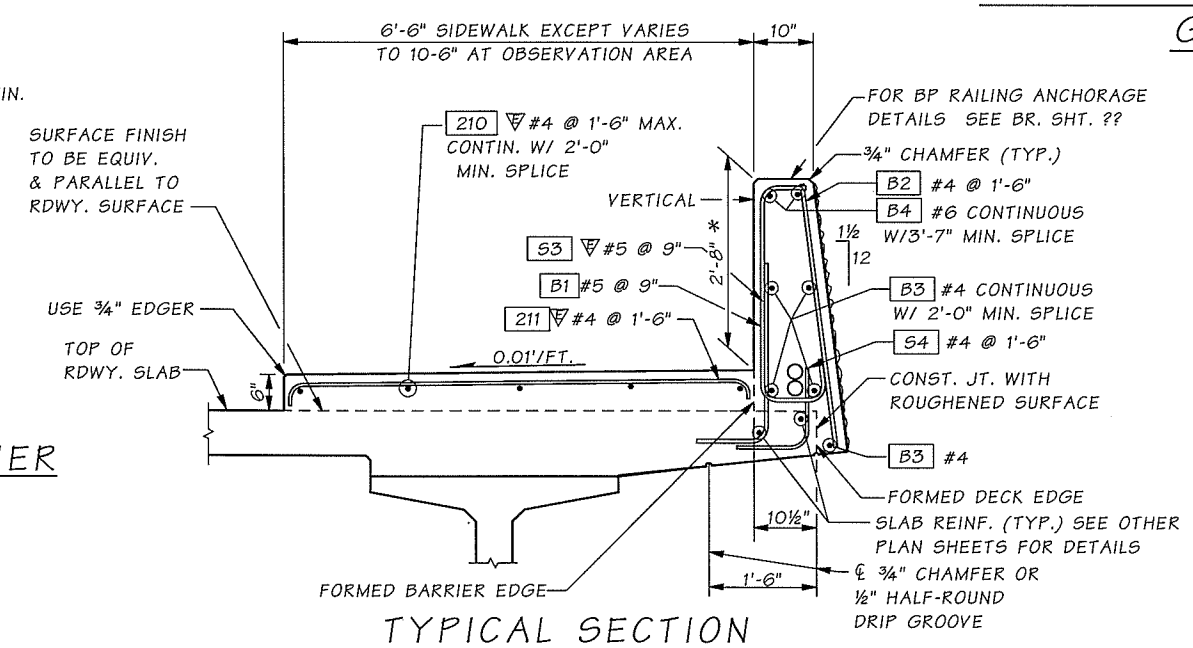

* MIN. HEIGHT. PEDESTRIAN BARRIER HEIGHT MAY VARY IF REQUIRED TO PROVIDE A SMOOTH PROFILE.

TYPICAL SECTION
PEDESTRIAN BARRIER

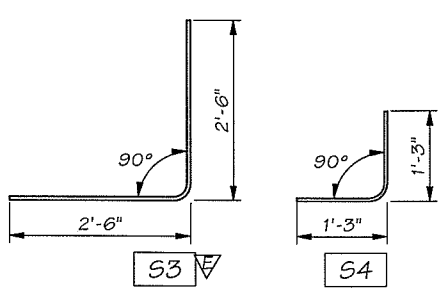

SR 999 JOB NO. ____ SHEET 23

Bridge Design Engr.	Kapur, J		
Supervisor	Kapur, J		
Designed By	MINNS, GEC	11/04	
Checked By	Mizumori, A	11/04	
Detailed By	Evans, P.D.	11/04	
Bridge Projects Engr.			
Prelim. Plan By			
Architect/Specialist			

M:\Y-Team\Clark County Betts Bridge\Window files\BARRIER 1.WND

DATE	REVISION	BY	APP'D

REGION NO.	STATE	FED. AID PROJ. NO.	SHEET NO.	TOTAL SHEETS
10	WASH.	BRM-4231(004)		
JOB NUMBER				

GARY E. C. MINNS — STATE OF WASHINGTON — 10796 — REGISTERED PROFESSIONAL ENGINEER — EXPIRES 1/22/06

BRIDGE AND STRUCTURES OFFICE

JUGESH KAPUR — STATE OF WASHINGTON — 25400 — REGISTERED PROFESSIONAL ENGINEER — EXPIRES 5/19/06

Washington State Department of Transportation

SALMON CREEK AVENUE
BETTS BRIDGE REPLACEMENT

PEDESTRIAN BARRIER DETAILS 1 OF 3

BRIDGE SHEET NO. 23

SHEET 94 OF 105 SHEETS

Thu Nov 04 15:11:54 2004

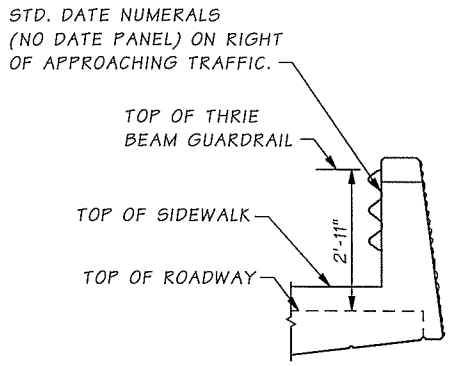

END VIEW

THRIE BEAM SHOWN
WITH "D" CONNECTION

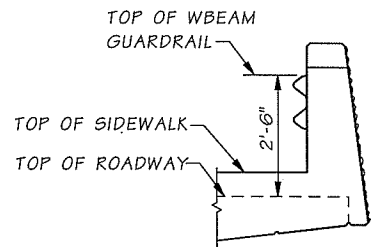

END VIEW

W-BEAM SHOWN WITH
"D" CONNECTION

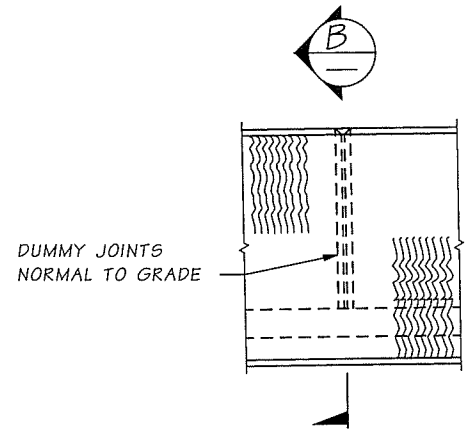

VIEW A ?

ALL CHAMFERS ¾".
SEE "LAYOUT" FOR APPLICABLE
SURFACE FINISH.

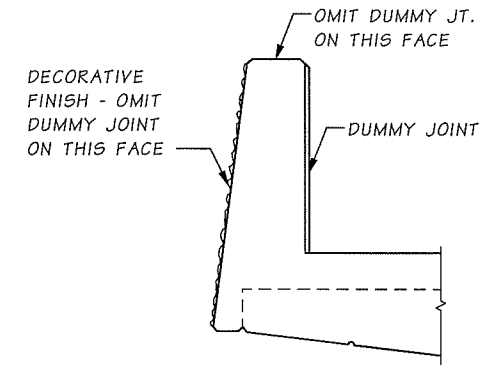

SECTION B

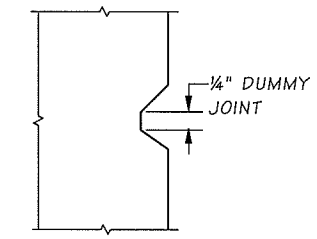

DUMMY JOINT
DETAIL

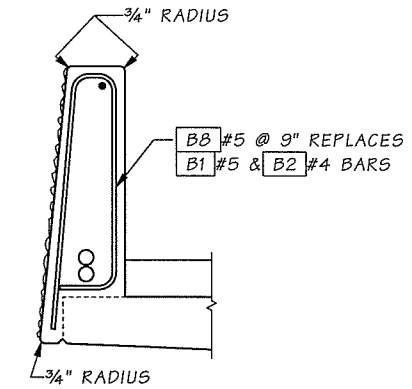

SLIPFORM
ALTERNATE

SEE TYPICAL SECTION - PEDESTRIAN
BARRIER FOR ADDITIONAL DETAILS

THE CONTRACTOR IS ADVISED THAT THE SLIPFORM CONSTRUCTION METHOD IS A PATENTED PROPRIETARY PROCESS FOR BARRIERS WITH A FRACTURED FIN FINISH.

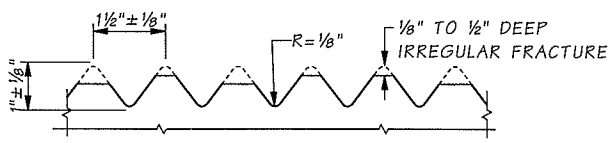

FRACTURED FIN FINISH

JUNCTION BOX LOCATIONS STATED BELOW ARE APPROXIMATE. CENTER JUNCTION BOX INSTALLATION BETWEEN BARRIER DUMMY JOINTS

JUNCTION BOX LOCATIONS

STATION	OFFSET	LABEL
58+78.26	29'-6" LT.	TS
58+86.26	29'-6" LT.	LT
58+99.74	29'-6" RT.	TS
59+07.74	29'-6" RT.	LT
59+92.26	29'-6" LT.	TS
60+00.26	29'-6" LT.	LT
60+13.74	29'-6" RT.	TS
60+21.74	29'-6" RT.	LT

TS = TRAFFIC SYSTEM
LT = LIGHTING SYSTEM
INSTALL ALL CONDUIT RUNS TO DRAIN TO A BRIDGE END OR PROVIDE DRAIN AT ALL LOW POINTS IN CONDUIT RUN ON BRIDGE.

▽ EPOXY COATED

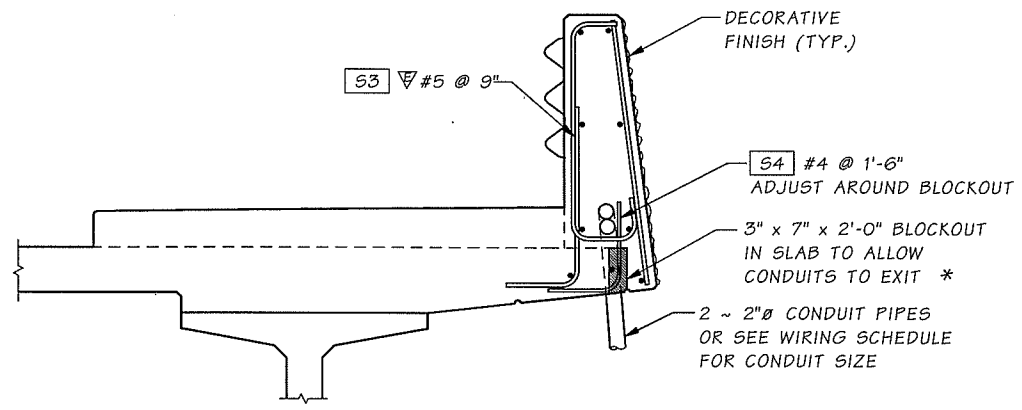

SECTION C ? BRIDGE

FOR DETAILS NOT SHOWN SEE "OUTSIDE ELEVATION" AND "TYPICAL SECTION ~ PEDESTRIAN BARRIER"

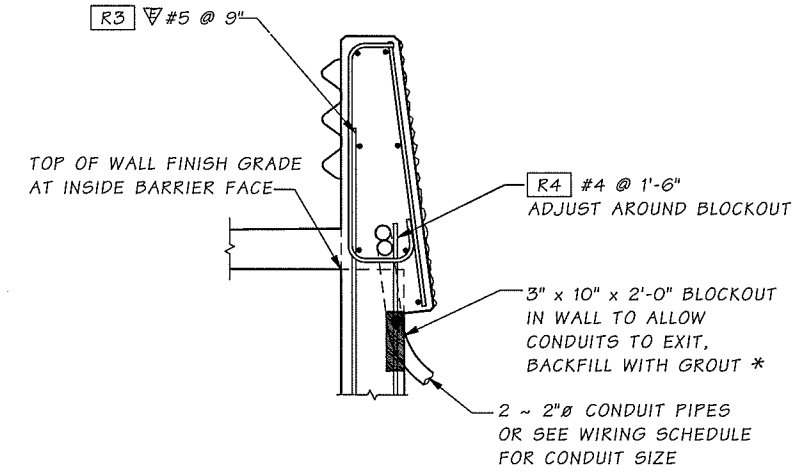

SECTION C ? WALL

DETAIL FOR RETAINING WALL OR WINGWALL REINFORCING NOT SHOWN SEE STD. PLAN D-1a & D-1b OR WINGWALL PLAN.
FOR DETAILS NOT SHOWN SEE "OUTSIDE ELEVATION" AND "TYPICAL SECTION ~ PEDESTRIAN BARRIER"

PEDESTRIAN BARRIER BAR LIST

ALL REINFORCING SHALL BE AASHTO M 31, GR. 60.

MARK	SIZE	LENGTH	BENDING DIAGRAM (ALL DIMENSIONS ARE OUT TO OUT)
B1	5	(a)	
B2	4	(a)	STR.
B3	4	(a)	STR.
B4	6	(a)	STR.
B8	5	(a)	

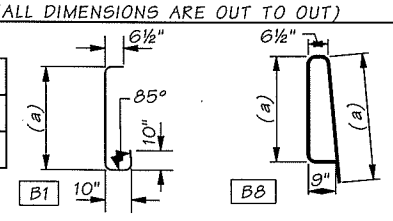

FOR S3 ▽ & S4 BARS SEE BRIDGE BARLIST.
(a) DETERMINE FROM PLANS

FOR W1 & W2 BARS SEE WINGWALL OR RETAINING WALL PLANS.

* BLOCKOUT WIDTH MAY BE INCREASED TO 6" TO ALLOW CONDUITS OF A LARGER DIAMETER THAN 2" TO EXIT BARRIER OR WALL WITHOUT REBAR STEEL CONFLICT

SR 999 JOB NO. ____ SHEET 24

Bridge Design Engr.	Kapur, J	
Supervisor	Kapur, J	
Designed By	MINNS, GEC	11/04
Checked By	Mizumori, A	11/04
Detailed By	Evans, P.D.	11/04
Bridge Projects Engr.		
Prelim. Plan By		
Architect/Specialist		

M:\Y-Team\Clark County Betts Bridge\Window files\BARRIER 2.WND

DATE	REVISION	BY	APP'D

REGION NO.	STATE	FED. AID PROJ. NO.	SHEET NO.	TOTAL SHEETS
10	WASH.	BRM-4231(004)		
JOB NUMBER				

GARY E.C. MINNS — STATE OF WASHINGTON — 10706 — REGISTERED PROFESSIONAL ENGINEER — EXPIRES 1/22/06

BRIDGE AND STRUCTURES OFFICE

JUGESH KAPUR — STATE OF WASHINGTON — 22400 — REGISTERED PROFESSIONAL ENGINEER — EXPIRES 5/19/06

Washington State Department of Transportation

SALMON CREEK AVENUE
BETTS BRIDGE REPLACEMENT

PEDESTRIAN BARRIER
DETAILS 2 OF 3

BRIDGE SHEET NO. 24

SHEET 95 OF 105 SHEETS

Thu Nov 04 15:11:55 2004

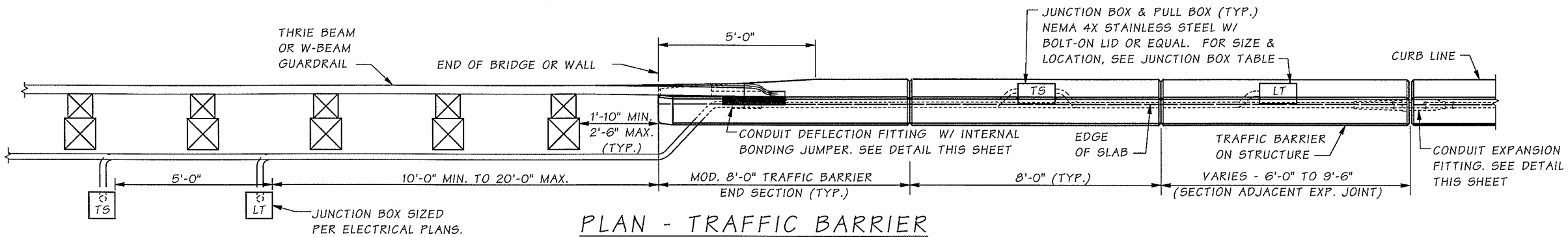

PLAN - TRAFFIC BARRIER

TYP. @ END OF MODIFIED TRAFFIC BARIER END SECTION
WHERE THRIE BEAM END SECTION "DESIGN F" STD. PLAN C-7a
OR GUARDRAIL END SECTION "DESIGN D OR F" STD PLAN C-5 IS USED

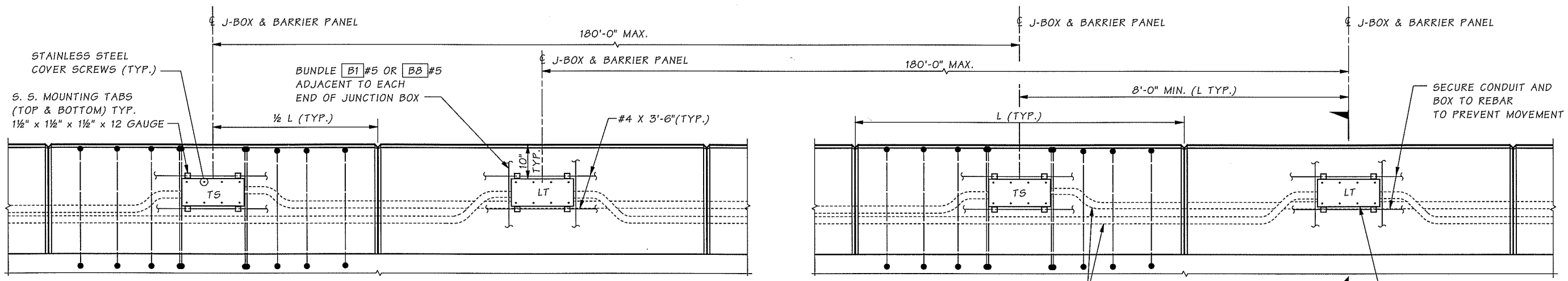

ELEVATION - CONDUITS & J-BOX IN TRAFFIC BARRIER

LABEL JUNCTION BOX COVER IN ACCORDANCE WITH STANDARD PLAN J-11a AND SPECIAL PROVISIONS.
ADJACENT JUNCTION BOXES ARE SHOWN CENTERED BETWEEN ADJACENT DUMMY JOINTS. IF THE DISTANCE BETWEEN ADJACENT DUMMY JOINTS IS 16'-0" OR GREATER, PLACE ADJACENT JUNCTION BOXES SYMETRICALLY ON EITHER SIDE OF THE CENTER OF ONE DUMMY PANEL WHILE MAINTAINING 8'-0" MINIMUM BETWEEN CENTER LINES OF THE JUNCTION BOXES.

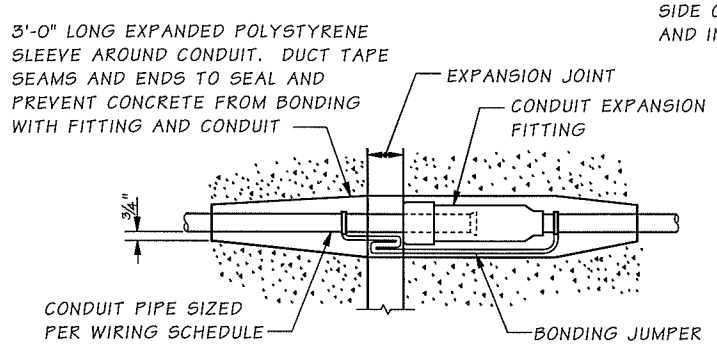

CONDUIT EXPANSION FITTING

CONDUIT FITTING - (TYPE AX FOR MOVEMENT OF ± 2")
AT BRIDGE EXPANSION JOINTS

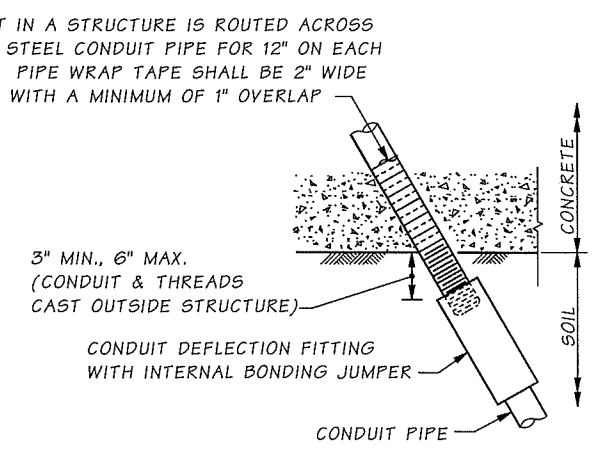

CONDUIT DEFLECTION FITTING A

CONDUIT FITTING - TYPE DX FOR DEFLECTION OF 30° AND
¾" MOVEMENT. PLACE AT CONDUIT PIPE EXIT FROM STRUCTURE

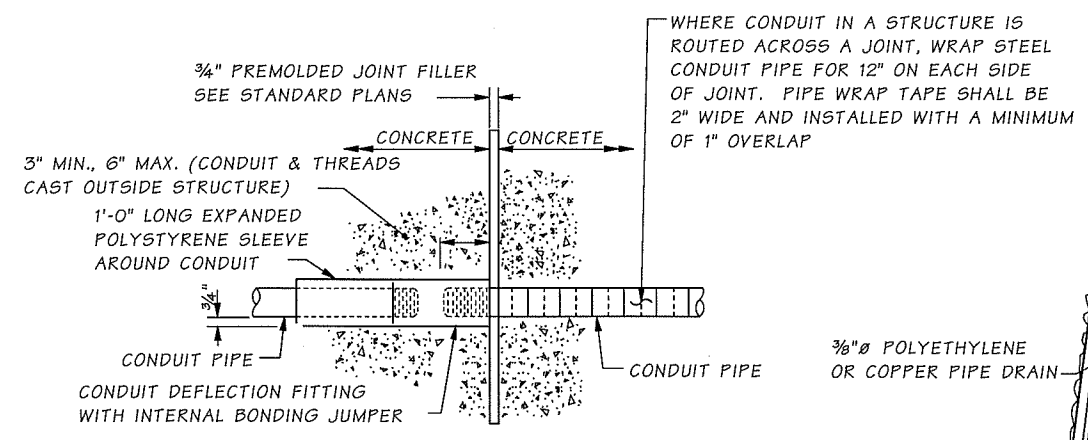

CONDUIT DEFLECTION FITTING B

CONDUIT FITTING - TYPE DX FOR DEFLECTION OF 30° AND ¾" MOVEMENT. CONDUIT PIPES PLACED THROUGH RETAIING WALL TRAFFIC BARRIER SHALL BE FITTED WITH DEFLECTION FITTINGS AT A MAXIMUM SPACING OF 120 FEET. THE DEFLECTION FITTINGS SHALL BE PLACED AT THE TRAFFIC BARRIER OPEN JOINT THAT COINCIDES WITH THE RETAINING WALL STEM EXPANSION JOINT NEAREST TO THE TRANSVERSE CONSTRUCTION JOINT IN THE WALL FOOTING.

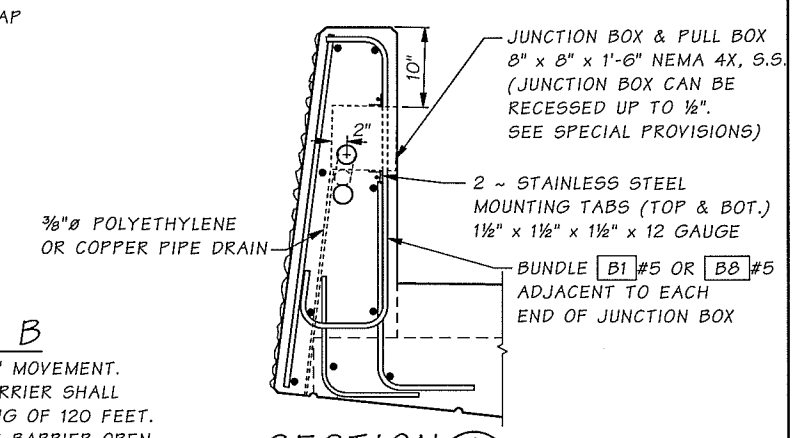

SECTION A

Bridge Design Engr.	Kapur, J		M:\Y-Team\Clark County Betts Bridge\Window files\BARRIER 3.WND
Supervisor	Kapur, J		
Designed By	MINNS, GEC	11/04	
Checked By	Mizumori, A	11/04	
Detailed By	Evans, P.D.	11/04	
Bridge Projects Engr.			
Prelim. Plan By			
Architect/Specialist			

DATE	REVISION	BY	APP'D

REGION NO.	STATE	FED. AID PROJ. NO.	SHEET NO.	TOTAL SHEETS
10	WASH.	BRM-4231(004)		
JOB NUMBER				

GARY E.C. MINNS — STATE OF WASHINGTON — 10796 — REGISTERED PROFESSIONAL ENGINEER — EXPIRES 1/22/06

BRIDGE AND STRUCTURES OFFICE

JUGESH KAPUR — STATE OF WASHINGTON — 25400 — REGISTERED PROFESSIONAL ENGINEER — EXPIRES 5/19/06

Washington State Department of Transportation

SALMON CREEK AVENUE
BETTS BRIDGE REPLACEMENT

PEDESTRIAN BARRIER
DETAILS 3 OF 3

BRIDGE SHEET NO. 25

SHEET 96 OF 105 SHEETS

SR 999 JOB NO. ____ SHEET 25

Thu Nov 04 15:11:55 2004

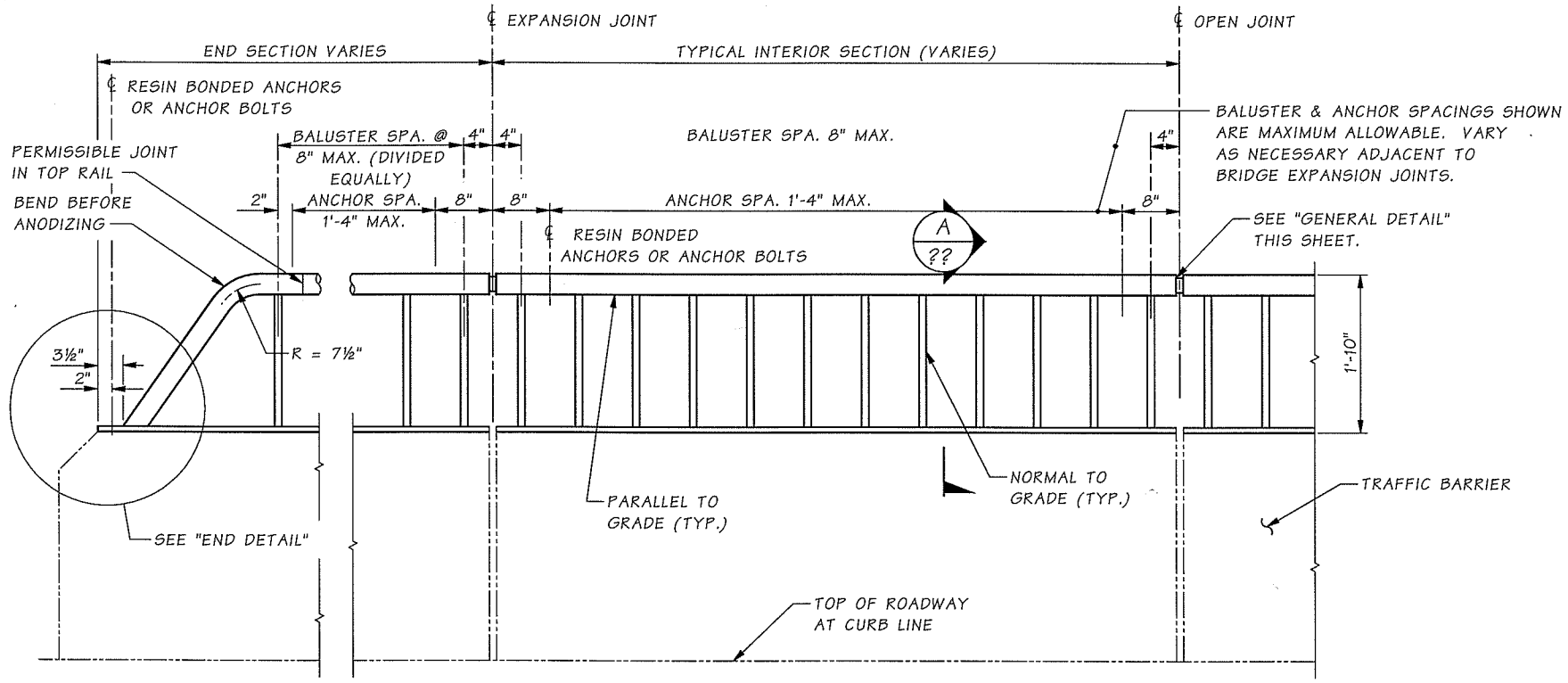

ELEVATION

BALUSTER AND GUARDRAIL SECTION ATTACHMENT DETAILS NOT SHOWN.

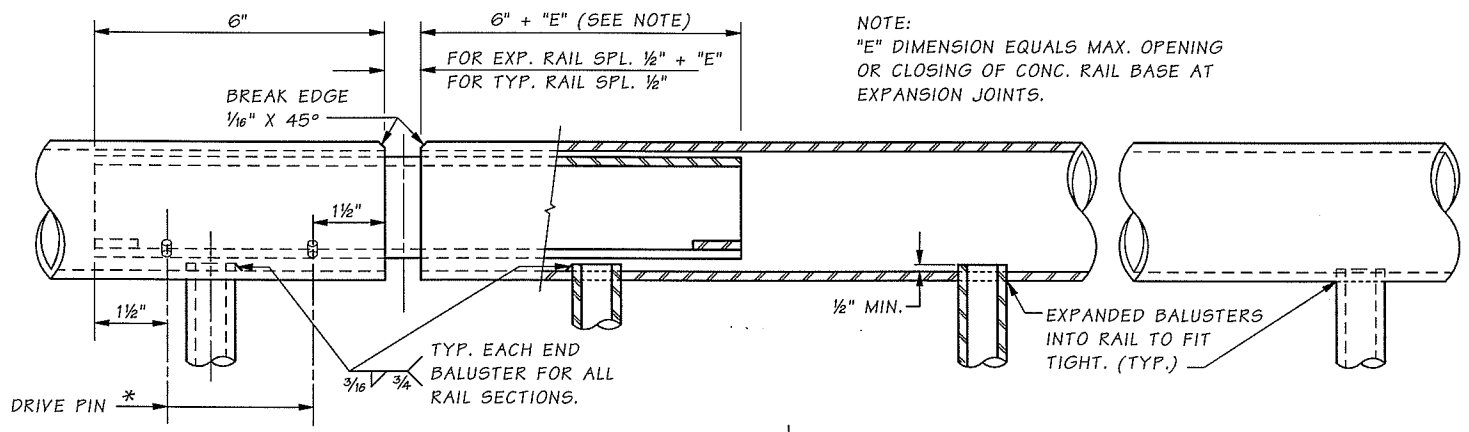

NOTE:
"E" DIMENSION EQUALS MAX. OPENING OR CLOSING OF CONC. RAIL BASE AT EXPANSION JOINTS.

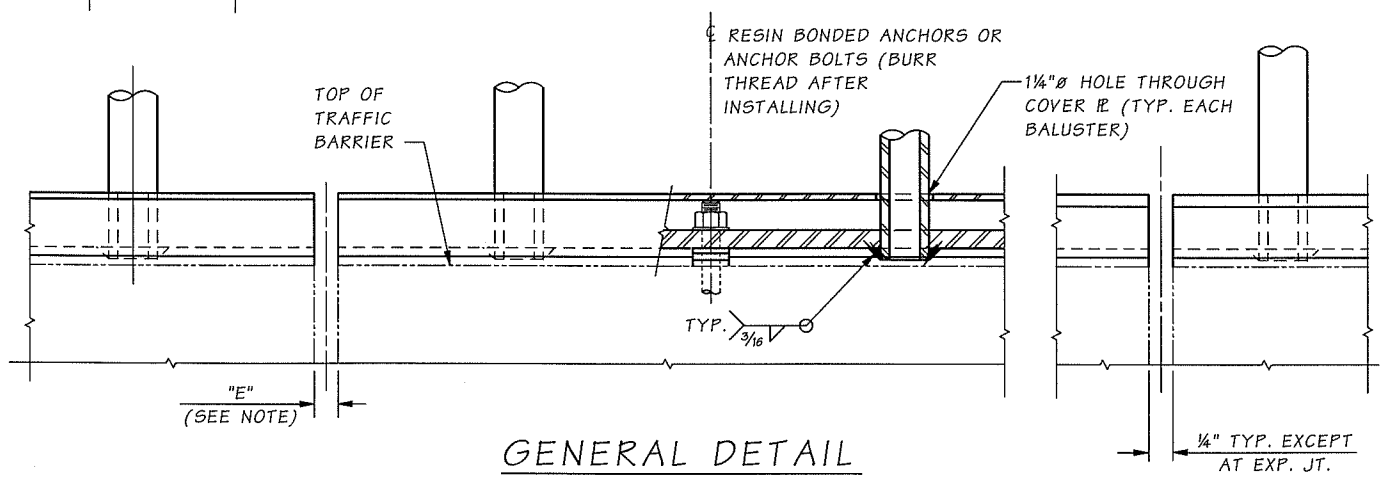

GENERAL DETAIL

NOTES

1. PIPE RAILING, PIPE RAILING SPLICES, COVER PLATES AND BOTTOM EXTRUDED CHANNELS SHALL BE BENT TO THE HORIZONTAL CURVE WHERE THE RADIUS OF CURVATURE IS LESS THAN 200 FEET.
2. SHOP DRAWINGS OF RAILING SHALL BE SUBMITTED FOR APPROVAL SHOWING COMPLETE DIMENSIONS AND DETAILS OF FABRICATION AND INCLUDING AN ERECTION DIAGRAM. MATERIAL BEING USED SHALL BE SPECIFIED IN THE SHOP DRAWINGS.
3. ALL ALUMINUM PARTS SHALL BE GIVEN A * (CLEAR OR BRONZE) ANODIC COATING AT LEAST 0.0006' THICK, AND SHALL BE SEALED TO MEET THE REQUIREMENTS OF ASTM B 136 AND SHALL HAVE A UNIFORM FINISH.
4. PIPE RAILING, PIPE RAILING SPLICES, COVER PLATES AND BOTTOM EXTRUDED CHANNELS MAY BE HEATED TO NOT MORE THAN 400°F FOR A PERIOD NOT TO EXCEED 30 MINUTES TO FACILITATE FORMING OR BENDING HORIZONTAL CURVATURE.
5. CUTTING SHALL BE DONE BY SAWING OR MILLING AND ALL CUTS SHALL BE TRUE AND SMOOTH. FLAME CUTTING WILL NOT BE PERMITTED.
6. PIPE RAILING, PIPE BALUSTERS, PIPE RAILING SPLICES, COVER PLATES AND BOTTOM EXTRUDED CHANNELS SHALL BE ADEQUATELY WRAPPED TO INSURE SURFACE PROTECTION DURING HANDLING AND TRANSPORTATION TO THE JOB SITE.
7. WELDING OF ALUMINUM SHALL CONFORM TO SECTION 9-28.14(3).
8. AFTER FABRICATION, POSTS SHALL BE HEAT TREATED IN ACCORDANCE WITH SECTION 6.5 OF THE AASHTO STANDARD SPECIFICATIONS FOR STRUCTURAL SUPPORTS FOR HIGHWAY SIGNS, LUMINAIRES, AND TRAFFIC SIGNALS DATED 2001 AND INTERIMS THROUGH 2002.

* NOTE TO DESIGNER:
Designer to choose color for their project in consultation with the Bridge Architect.

SR 999 JOB NO. ____ SHEET 26

Bridge Design Engr.	Kapur, J		
Supervisor	Kapur, J		
Designed By	MINNS, GEC	11/04	
Checked By	Mizumori, A	11/04	
Detailed By	Evans, P.D.	11/04	
Bridge Projects Engr.			
Prelim. Plan By			
Architect/Specialist			

M:\Y-Team\Clark County Betts Bridge\Window files\ARCH PED RAIL1.WND

DATE	REVISION	BY	APP'D

REGION NO.	STATE	FED. AID PROJ. NO.	SHEET NO.	TOTAL SHEETS
10	WASH.	BRM-4231(004)		
JOB NUMBER				

GARY E.C. MINNS — STATE OF WASHINGTON — 10796 — REGISTERED PROFESSIONAL ENGINEER — EXPIRES 1/22/06

BRIDGE AND STRUCTURES OFFICE

JUGESH KAPUR — STATE OF WASHINGTON — 25409 — REGISTERED PROFESSIONAL ENGINEER — EXPIRES 5/19/06

Washington State Department of Transportation

SALMON CREEK AVENUE
BETTS BRIDGE REPLACEMENT

BRIDGE RAIL TYPE XX
DETAILS 1 OF 2

BRIDGE SHEET NO. 26

SHEET 97 OF 105 SHEETS

Thu Nov 04 15:11:52 2004

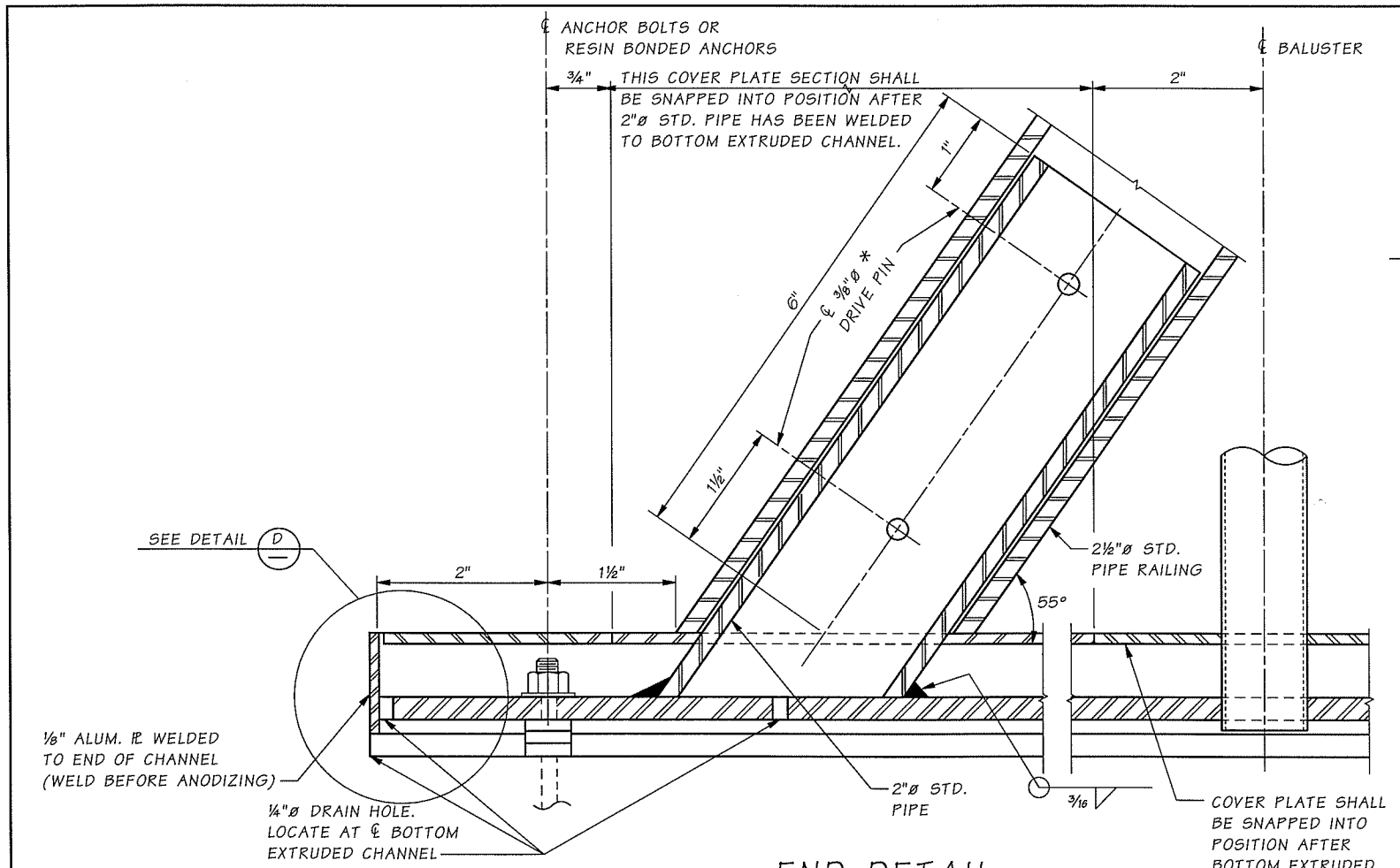

END DETAIL

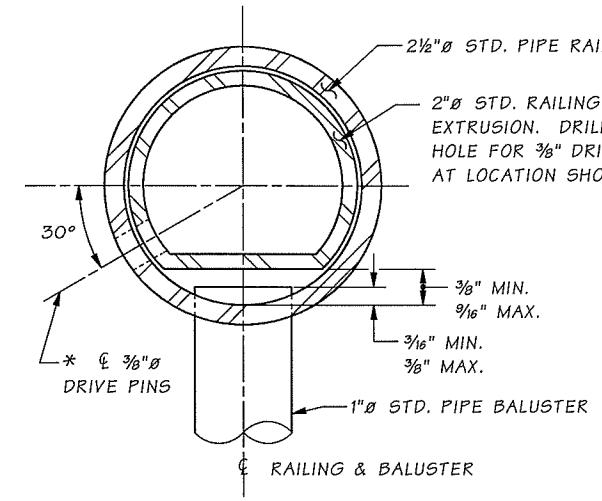

DETAIL B
OPTION #1

* LOCATE ON OPPOSITE SIDE OF TRAFFIC. DRIVE PINS SHALL BE DRIVEN FLUSH WITH THE OUTSIDE FACE OF THE RAILING.

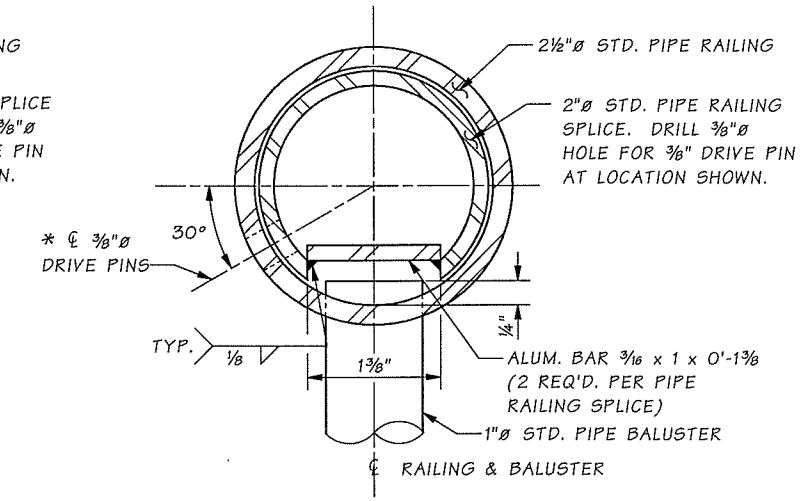

DETAIL B
OPTION #2

* LOCATE ON OPPOSITE SIDE OF TRAFFIC. DRIVE PINS SHALL BE DRIVEN FLUSH WITH THE OUTSIDE FACE OF THE RAILING.

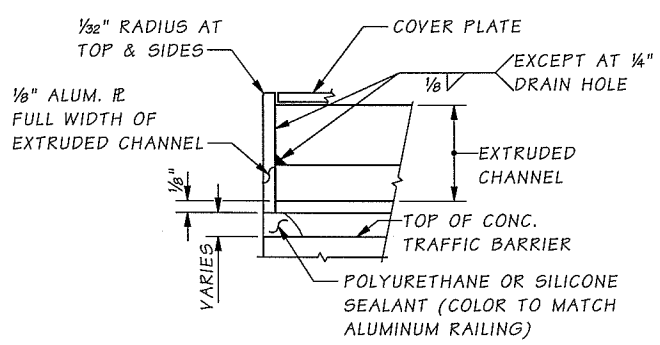

DETAIL D
DRAIN HOLES NOT SHOWN

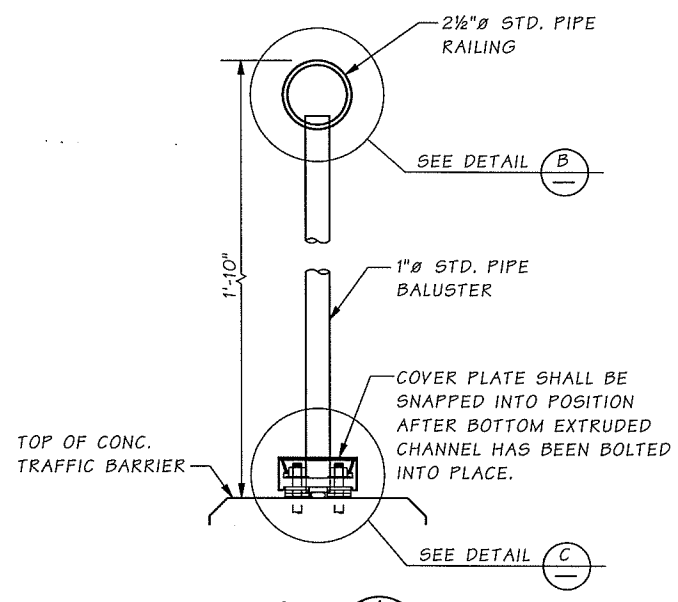

SECTION A
1

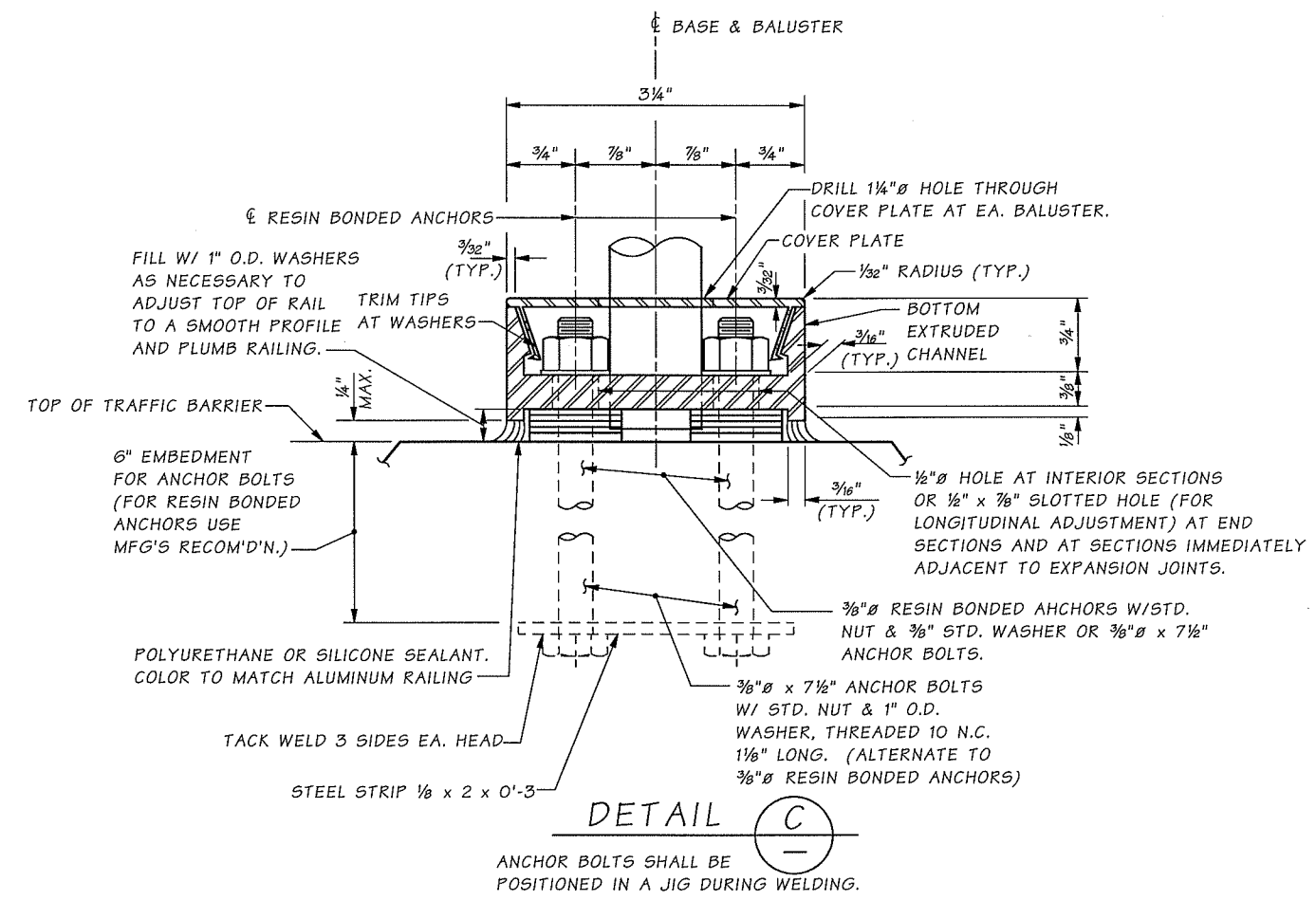

DETAIL C
ANCHOR BOLTS SHALL BE POSITIONED IN A JIG DURING WELDING.

MAT'L	PART	MATERIAL SPECIFICATION
ALUMINUM	PIPES (SEE NOTE 8)	ASTM B221- 6005-T5 ASTM B 241 OR B 429 6061-T6
	EXTRUDED CHANNELS, COVER PLATES & BAR	ASTM B221- 6005-T5
STEEL	ANCHOR BOLTS, NUTS & WASHERS	AASHTO M164 (GALVANIZE IN ACCORDANCE WITH AASHTO SPECIFICATION M232)
	STRIP	ASTM A36
	DRIVE PINS	ASTM A-276 TYPE 302 STAINLESS STEEL

SR 999 JOB NO. ____ SHEET 27

Bridge Design Engr.	Kapur, J		M:\Y-Team\Clark County Betts Bridge\Window files\ARCH PED RAIL2.WND
Supervisor	Kapur, J		
Designed By	MINNS, GEC	11/04	
Checked By	Mizumori, A	11/04	
Detailed By	Evans, P.D.	11/04	
Bridge Projects Engr.			
Prelim. Plan By			
Architect/Specialist			

DATE	REVISION	BY	APP'D

REGION NO.	STATE	FED. AID PROJ. NO.	SHEET NO.	TOTAL SHEETS
10	WASH.	BRM-4231(004)		
JOB NUMBER				

Thu Nov 04 15:11:52 2004

GARY E.C. MINNS — STATE OF WASHINGTON — 10796 — REGISTERED PROFESSIONAL ENGINEER — EXPIRES 1/22/06

BRIDGE AND STRUCTURES OFFICE

JUGESH KAPUR — STATE OF WASHINGTON — 25400 — REGISTERED PROFESSIONAL ENGINEER — EXPIRES 5/19/06

Washington State Department of Transportation

SALMON CREEK AVENUE
BETTS BRIDGE REPLACEMENT

BRIDGE RAILING TYPE XX
DETAILS 2 OF 2

BRIDGE SHEET NO. 27

SHEET 98 OF 105 SHEETS

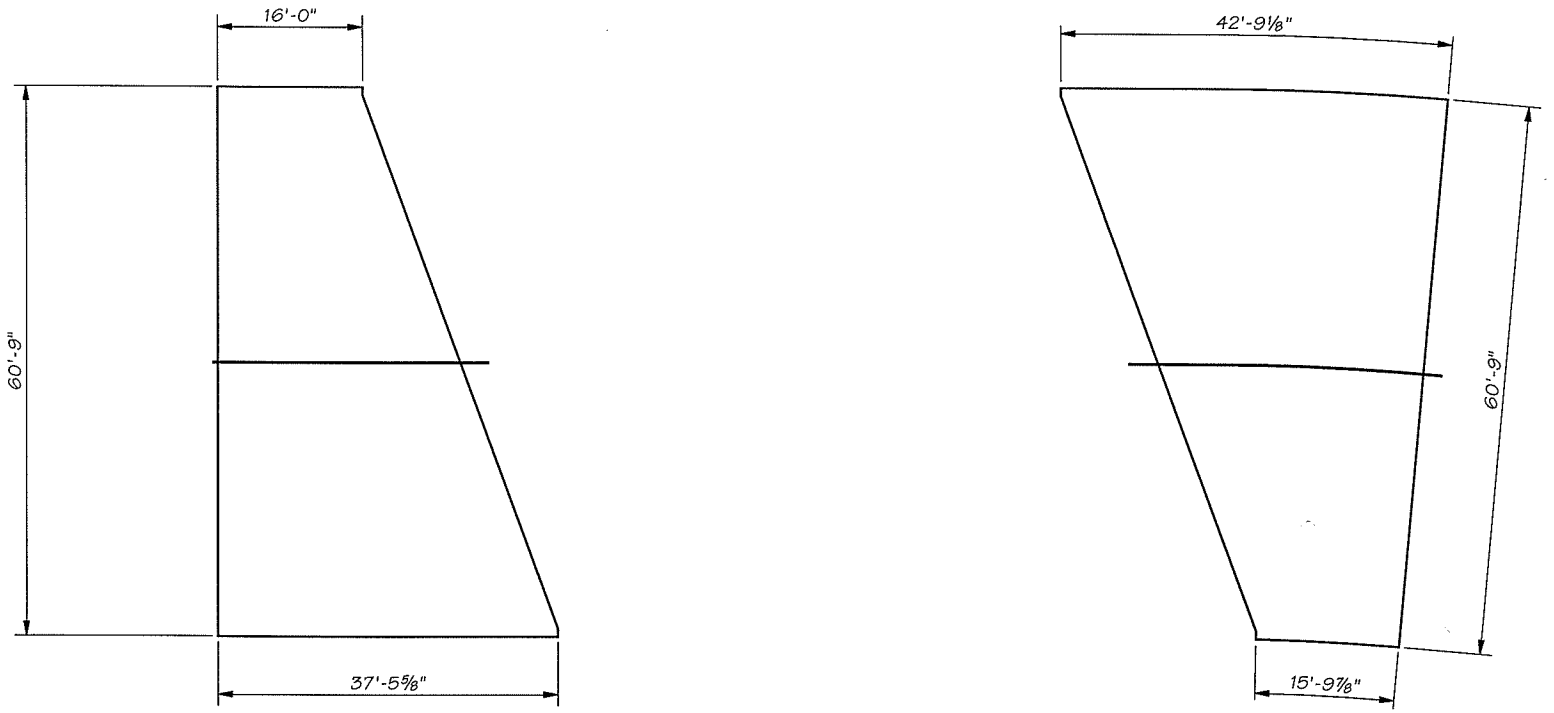

PLAN

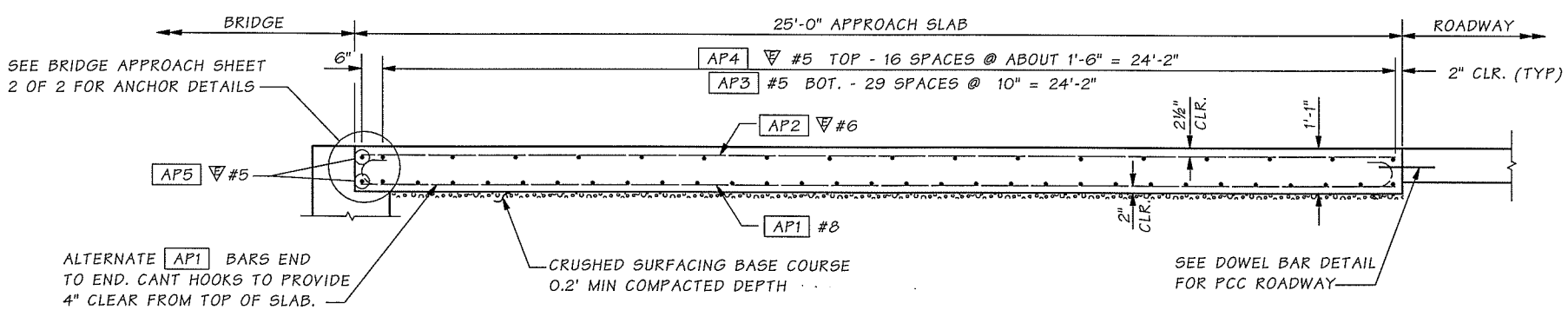

LONGITUDINAL SECTION

NOTES:

1. ALL EDGES OF APPROACH SLAB SHALL HAVE ½" RADIUS.
2. LONGITUDINAL JOINTS SHALL BE PLACED ON LANE LINES AND SHALL BE CONSTRUCTED AND SEALED IN ACCORDANCE WITH STD. SPEC. SECTION 5-05.3(8). JOINTS MAY BE EITHER A SAW CUT CRACK CONTROL JOINT OR A CONSTRUCTION JOINT. SAWCUT JOINTS SHALL TERMINATE 1'-0" BEFORE REACHING EDGE OF SLAB AND MUST BE SAW CUT AS SOON AS POSSIBLE AFTER PLACEMENT OF CONCRETE.

   (A) APPROACH SLABS LESS THAN 40' WIDE - NO JOINT IS REQUIRED.
   (B) APPROACH SLABS WIDER THAN 40' - ONE OR MORE JOINTS ARE REQUIRED TO DIVIDE THE SLAB INTO APPROXIMATELY 24' WIDE SECTIONS.

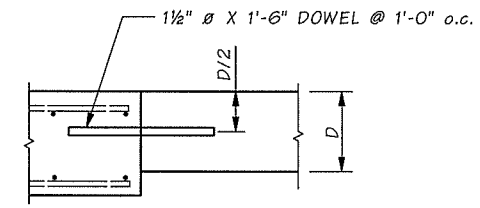

TYPICAL PCCP ROADWAY DOWEL BAR DETAIL

INSERT DOWELS PARALLEL TO CENTER LINE ALONG TRANSVERSE CONSTRUCTION JOINT.

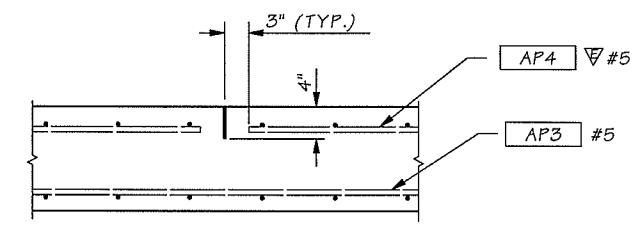

TYPICAL LONGITUDINAL CRACK CONTROL JOINT DETAIL

BAR LIST FOR STANDARD 10' X 25' APPROACH SLAB QUANTITY MODULE				
LOCATION	MARK #	SIZE	NO.	LENGTH
LONGITUDINAL BOTTOM	AP1	8	24	25'-7"
LONGITUDINAL TOP	AP2	#6	24	24'-8"
TRANSVERSE BOTTOM	AP3	5	30	9'-8"
TRANSVERSE TOP	AP4	#5	17	9'-8"
TRANSVERSE END BAR	AP5	#5	2	9'-8"

APPROXIMATE QUANTITIES (PER SY) FOR SLAB (BASED ON QUANTITY MODULE)	
SLAB EPOXY COATED REINFORCING BARS (TOP MAT)	38.52 LBS/SY
SLAB REINFORCING BARS (BOTTOM MAT)	72.38 LBS/SY
CONCRETE (CU. YDS.)	0.361 CY/SY
APPROACH ANCHORS AND PCC ROADWAY DOWELS	AS REQUIRED
10 - AP6 #5 (IF REQUIRED)	105 LBS.

BENDING DETAIL FOR QUANTITIES

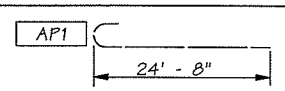

ALL REINFORCING BARS SHOWN ON THIS SHEET SHALL BE AASHTO M-31 UNLESS NOTED OTHERWISE.

= EPOXY COATED REINFORCING STEEL

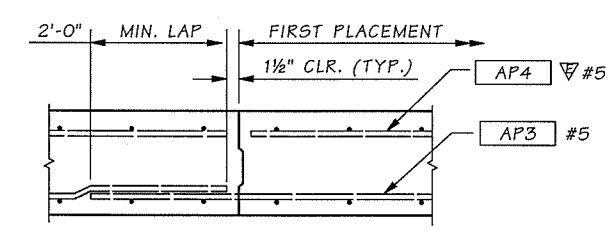

TYPICAL LONGITUDINAL CONSTRUCTION JOINT

EDGE FIRST POUR ONLY WITH ⅛" RADIUS.

SR 999 JOB NO. ____ SHEET 28

Bridge Design Engr.	Kapur, J		
Supervisor	Kapur, J		
Designed By	MINNS, GEC	11/04	
Checked By	Mizumori, A	11/04	
Detailed By	Evans, P.D.	11/04	
Bridge Projects Engr.			
Prelim. Plan By			
Architect/Specialist			

M:\Y-Team\Clark County Betts Bridge\Window files\APPR SLAB 1.WND

DATE	REVISION	BY	APP'D

REGION NO.	STATE	FED. AID PROJ. NO.	SHEET NO.	TOTAL SHEETS
10	WASH.	BRM-4231(004)		
JOB NUMBER				

GARY E. C. MINNS, STATE OF WASHINGTON, 10798, REGISTERED PROFESSIONAL ENGINEER — EXPIRES 1/22/06

BRIDGE AND STRUCTURES OFFICE

JUGESH KAPUR, STATE OF WASHINGTON, 25400, REGISTERED PROFESSIONAL ENGINEER — EXPIRES 5/19/06

Washington State Department of Transportation

SALMON CREEK AVENUE
BETTS BRIDGE REPLACEMENT

BRIDGE APPROACH SLAB DETAILS 1 OF 2

BRIDGE SHEET NO. 28

SHEET 99 OF 105 SHEETS

Thu Nov 04 15:11:49 2004

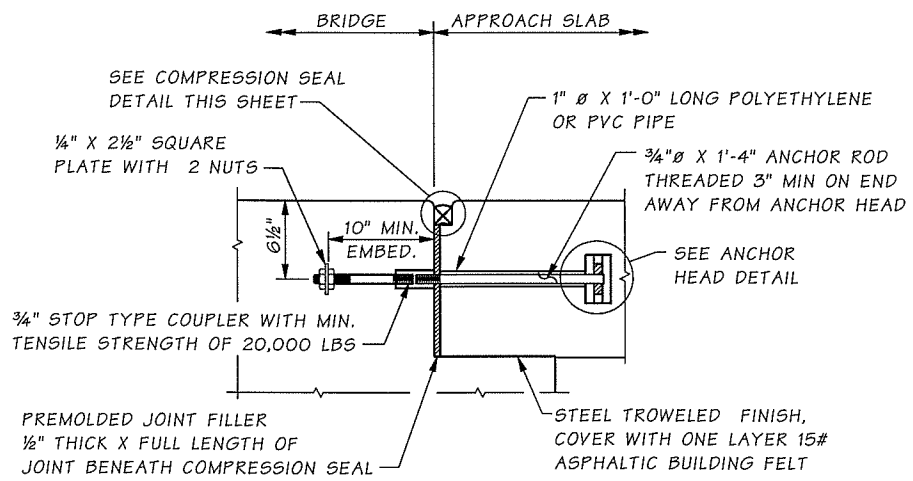

APPROACH ANCHOR - METHOD A

SEMI-INTEGRAL TYPE ONLY

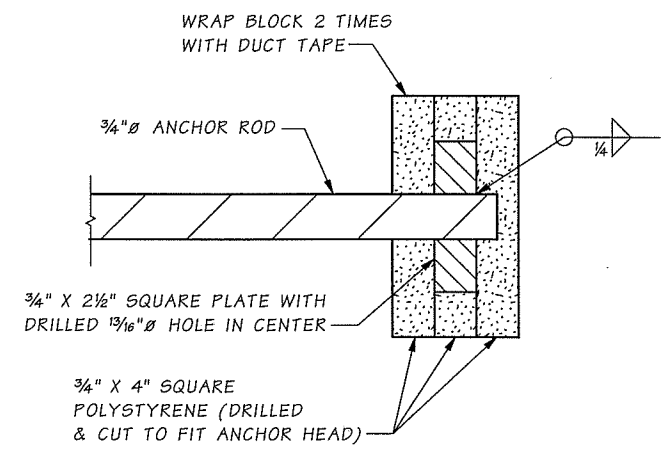

ANCHOR HEAD DETAIL

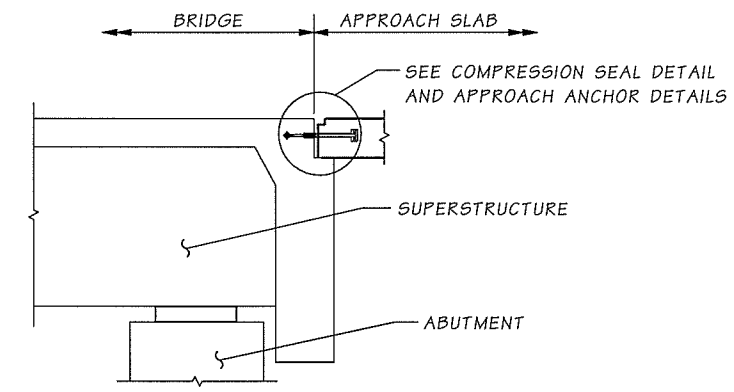

SEMI-INTEGRAL TYPE ABUTMENT

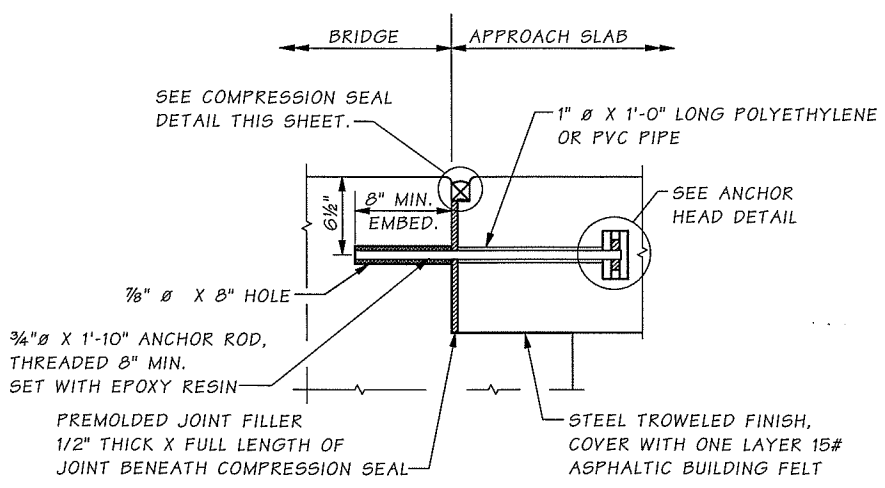

APPROACH ANCHOR - METHOD B

SEMI-INTEGRAL TYPE ONLY

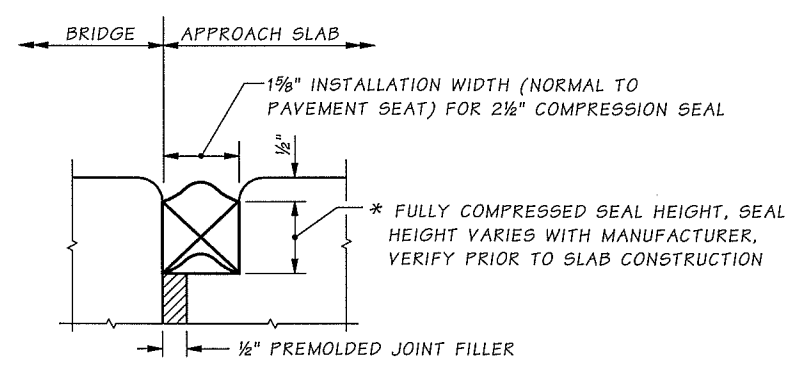

COMPRESSION SEAL DETAIL

NOTE:
PAINT METAL COMPONENTS OF APPROACH ANCHOR WITH ONE COAT OF INORGANIC ZINC OR FORMULA A-11-99 PAINT IN ACCORDANCE WITH STD. SPEC. 9-08.2.

SR 999 JOB NO. ____ SHEET 29

Bridge Design Engr.	Kapur, J		
Supervisor	Kapur, J		
Designed By	MINNS, GEC	11/04	
Checked By	Mizumori, A	11/04	
Detailed By	Evans, P.D.	11/04	
Bridge Projects Engr.			
Prelim. Plan By			
Architect/Specialist			

M:\Y-Team\Clark County Betts Bridge\Window files\APPR SLAB 2.WND

DATE	REVISION	BY	APP'D

REGION NO.	STATE	FED. AID PROJ. NO.	SHEET NO.	TOTAL SHEETS
10	WASH.	BRM-4231(004)		
JOB NUMBER				

GARY E.C. MINNS — STATE OF WASHINGTON — 10708 — REGISTERED PROFESSIONAL ENGINEER — EXPIRES 1/22/06

BRIDGE AND STRUCTURES OFFICE

JUGESH KAPUR — STATE OF WASHINGTON — 25400 — REGISTERED PROFESSIONAL ENGINEER — EXPIRES 5/19/06

Washington State Department of Transportation

SALMON CREEK AVENUE
BETTS BRIDGE REPLACEMENT

BRIDGE APPROACH SLAB DETAILS 2 OF 2

BRIDGE SHEET NO. 29

SHEET 100 OF 105 SHEETS

Thu Nov 04 15:11:50 2004

SR 999 JOB NO. ____ SHEET 30

Bridge Design Engr.	Kapur, J	
Supervisor	Kapur, J	
Designed By	MINNS, GEC	11/04
Checked By	Mizumori, A	11/04
Detailed By	Evans, P.D.	11/04
Bridge Projects Engr.		
Prelim. Plan By		
Architect/Specialist		

M:\Y-Team\Clark County Betts Bridge\Window files\ARCH DET1.WND

DATE	REVISION	BY	APP'D

REGION NO.	STATE	FED. AID PROJ. NO.	SHEET NO.	TOTAL SHEETS
10	WASH.	BRM-4231(004)		
JOB NUMBER				

CARL E.C. MINNS — STATE OF WASHINGTON — 10796 — REGISTERED PROFESSIONAL ENGINEER — EXPIRES 1/22/06

BRIDGE AND STRUCTURES OFFICE

JUGESH KAPUR — STATE OF WASHINGTON — 25400 — REGISTERED PROFESSIONAL ENGINEER — EXPIRES 5/19/06

Washington State Department of Transportation

SALMON CREEK AVENUE
BETTS BRIDGE REPLACEMENT

ARCHITECTURAL DETAILS 1 OF 2

BRIDGE SHEET NO. 30

SHEET 101 OF 105 SHEETS

Thu Nov 04 15:11:50 2004

SR 999 JOB NO. ____ SHEET 31

Bridge Design Engr.	Kapur, J		M:\Y-Team\Clark County Betts Bridge\Window files\ARCH DET2.WND
Supervisor	Kapur, J		
Designed By	MINNS, GEC	11/04	
Checked By	Mizumori, A	11/04	
Detailed By	Evans, P.D.	11/04	
Bridge Projects Engr.			
Prelim. Plan By			
Architect/Specialist			

DATE	REVISION	BY	APP'D

REGION NO.	STATE	FED. AID PROJ. NO.	SHEET NO.	TOTAL SHEETS
10	WASH.	BRM-4231(004)		
JOB NUMBER				

GARY E. C. MINNS — STATE OF WASHINGTON — 10798 — REGISTERED PROFESSIONAL ENGINEER — EXPIRES 1/22/06

BRIDGE AND STRUCTURES OFFICE

JUGESH KAPUR — STATE OF WASHINGTON — 25400 — REGISTERED PROFESSIONAL ENGINEER — EXPIRES 5/19/06

Washington State Department of Transportation

SALMON CREEK AVENUE
BETTS BRIDGE REPLACEMENT

ARCHITECTURAL DETAILS 2 OF 2

BRIDGE SHEET NO. 31

SHEET 102 OF 105 SHEETS

Thu Nov 04 15:11:51 2004

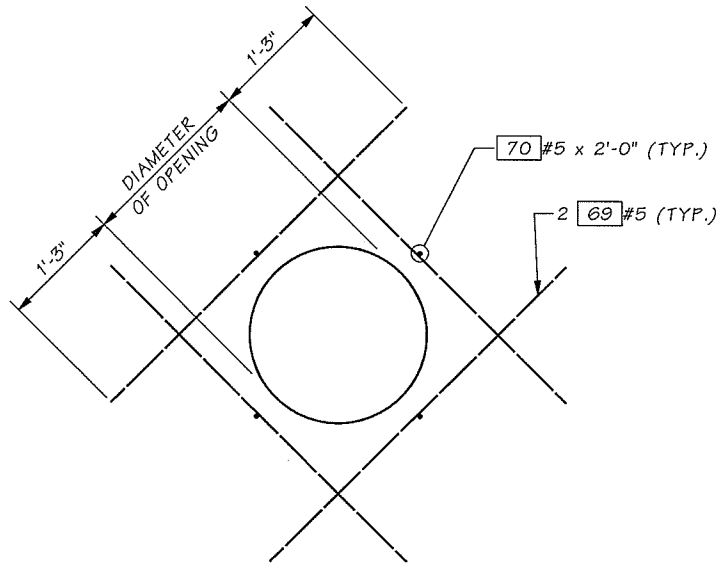

OPENING IN END DIAPHRAGM FOR UTILITY

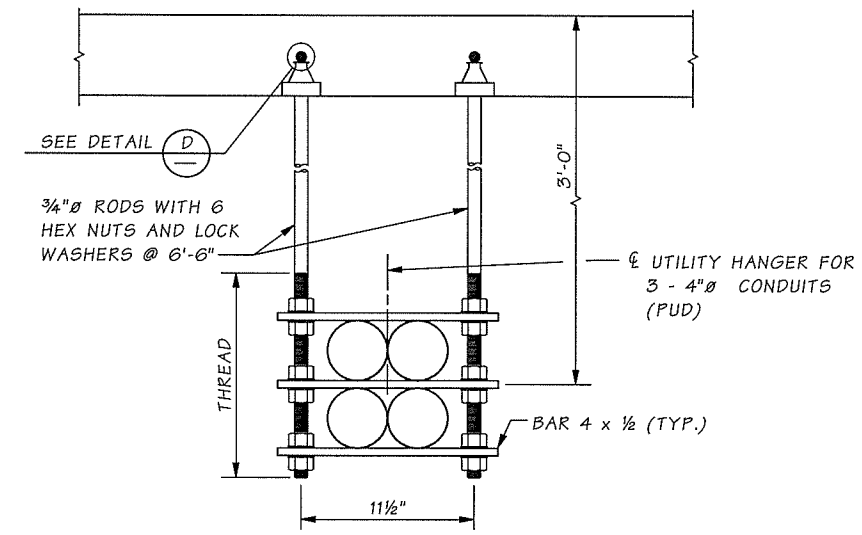

MULTIPLE UTILITY DETAIL

PUD CONDUITS

DIAMETER OF OPENINGS IN END DIAPHRAGM

UTILITY	DIAMETER OF OPENINGS
BATTLE GROUND 24" PIPE	2'-9"
DRY UTILITY INSTALLATIONS	
HDSD 18" GRAVITY TRUNK	2'-3"

SR 999 JOB NO. ____ SHEET 32

Bridge Design Engr.	Kapur, J		M:\Y-Team\Clark County Betts Bridge\window files\UTILITY SUPPORTS.WND								
Supervisor	Kapur, J						REGION NO.	STATE	FED. AID PROJ. NO.	SHEET NO.	TOTAL SHEETS
Designed By	MINNS, GEC	11/04					10	WASH.	BRM-4231(004)		
Checked By	Mizumori, A	11/04					JOB NUMBER				
Detailed By	Evans, P.D.	11/04									
Bridge Projects Engr.											
Prelim. Plan By											
Architect/Specialist			DATE	REVISION	BY	APP'D					

Thu Nov 04 15:45:28 2004

GARY E.C. MINNS — STATE OF WASHINGTON — 10790 — REGISTERED PROFESSIONAL ENGINEER — EXPIRES 1/22/06

BRIDGE AND STRUCTURES OFFICE

UGESH KAPUR — STATE OF WASHINGTON — 25400 — REGISTERED PROFESSIONAL ENGINEER — EXPIRES 5/19/06

Washington State Department of Transportation

SALMON CREEK AVENUE
BETTS BRIDGE REPLACEMENT

UTILITY SUPPORTS DETAILS 1 OF 2

BRIDGE SHEET NO. 32

SHEET 103 OF 105 SHEETS

THIS SHEET BY CONSULTANT

SR 999 JOB NO. ____ SHEET 33

Bridge Design Engr.	M:\Y-Team\Clark County Betts Bridge\Window files\UTILITY SUPPORT 2.WND								
Supervisor					REGION NO.	STATE	FED. AID PROJ. NO.	SHEET NO.	TOTAL SHEETS
Designed By					10	WASH.	BRM-4231(004)		
Checked By									
Detailed By					JOB NUMBER				
Bridge Projects Engr.									
Prelim. Plan By									
Architect/Specialist	DATE	REVISION	BY	APP'D					

Thu Nov 04 15:12:10 2004

BRIDGE AND STRUCTURES OFFICE

Washington State Department of Transportation

SALMON CREEK AVENUE
BETTS BRIDGE REPLACEMENT

UTILITY SUPPORTS
DETAILS 2 OF 2

BRIDGE SHEET NO. 33

SHEET 104 OF 105 SHEETS

S = Bar is included in substructure quantities.
L = Lump sum quantity.
T = Transverse or S = Seismic
E = Bar is to be epoxy coated.
V = Bar dimensions vary between dimensions shown on this line and the following line.

MARK NO.	LOCATION	SIZE	NO REQ'D	BEND TYPE	TIE OR STIR.	LUMP SUM	SUBSTR.	EPOXY COAT	VARIES	NO. EACH	DIMENSIONS (Out to Out) U Ft.	U In.	W Ft.	W In.	X Ft.	X In.	Y Ft.	Y In.	Z Ft.	Z In.	θ_1 Deg.	θ_2 Deg.	LENGTH Ft.	LENGTH In.	WEIGHT Lbs.
	PIER 1																								
1	CAP BOTTOM	9	16	54			S				36	9.0											38	1	2071
2	CAP BOTTOM	6	67	62			S				6	1.0	3	3.0	3	3.0							12	3	1235
3	ABOVE SHAFT	5	4	67			S				3	0.0	2	9.0	0	4.0	0	8.0	40	0.0			77	9	324
4	CAP SIDE	7	8	50			S				34	9.0											34	9	568
5	CAP TOP	9	16	54			S				36	9.0											38	1	2071
6	CAP TOP	6	67	62			S				6	1.0	3	3.0	3	3.0							12	3	1235
7	STEM VERTICAL	7	63	54			S		V	1	10	8.0											11	8	
											11	0.0											11	12	1522
8	STEM TOP	7	6	54			S				34	0.0											34	12	429
9	STEM TOP	5	63	61	T		S				1	8.0	1	0.0	1	0.0							3	5	227
10	STEM HORIZ ACUTE ANGLE	7	16	79			S				34	0.0	1	6.0			0	3.5			70		35	2	1150
10	STEM HORIZ OBTUSE ANGLE	7	16	79			S				34	0.0	1	6.0			0	3.5			110		35	5	1158
11	STEM VERTICAL	8	63	54			S		V	1	10	8.0											11	10	
											11	0.0											12	2	2011
12	STEM TIES	5	64	58	S		S				1	8.0											2	11	194
50	GIRDER STOP	5	46	72	T		S				1	7.0	2	9.0	2	9.0							7	10	374
51	GIRDER STOP	5	27	50	T		S				4	8.0											4	8	131
	PIER 2																								
1	CAP BOTTOM	9	16	54			S				36	9.0											38	1	2071
2	CAP BOTTOM	6	67	62			S				6	1.0	3	3.0	3	3.0							12	3	1235
3	ABOVE SHAFT	5	4	67			S				3	0.0	2	9.0	0	4.0	0	8.0	40	0.0			77	9	324
4	CAP SIDE	7	8	50			S				34	9.0											34	9	568
5	CAP TOP	9	16	54			S				36	9.0											38	1	2071
6	CAP TOP	6	67	62			S				6	1.0	3	3.0	3	3.0							12	3	1235
7	STEM VERTICAL	7	63	54			S		V	1	10	8.0											11	8	
											11	0.0											11	12	1522
8	STEM TOP	7	6	54			S				34	0.0											34	12	429
9	STEM TOP	5	63	61	T		S				1	8.0	1	0.0	1	0.0							3	5	227
10	STEM HORIZ ACUTE ANGLE	7	16	79			S				34	0.0	1	6.0			0	3.5			70		35	2	1150
10	STEM HORIZ OBTUSE ANGLE	7	16	79			S				34	0.0	1	6.0			0	3.5			110		35	5	1158
11	STEM VERTICAL	8	63	54			S		V	1	10	8.0											11	10	
											11	0.0											12	2	2011
12	STEM TIES	5	64	58	S		S				1	8.0											2	11	194
50	GIRDER STOP	5	46	72	T		S				1	7.0	2	9.0	2	9.0							7	10	374
51	GIRDER STOP	5	27	50	T		S				4	8.0											4	8	131
	CURTAIN WALLS																								
20	VERTICAL	6	40	54			S		V	20	16	0.0											16	10	
											16	4.0											17	2	1022
21	VERTICAL	6	40	54	T				V	20	11	8.0											12	6	
											12	0.0											12	10	762
22	OUTSIDE ACUTE	6	18	51			S				7	6.0											8	2	221
22	OUTSIDE OBTUSE	6	18	51			S				7	0.0											7	8	208
23	INSIDE ACUTE	7	18	51			S				7	6.0											8	4	305
23	INSIDE OBTUSE	7	18	51			S				7	6.0											8	4	305
24	END TIES	5	60	63			S				0	7.5	1	0.0	1	0.0							2	4	148
25	INSIDE ACUTE	6	12	51			S				7	6.0											8	2	148
25	INSIDE OBTUSE	6	12	51			S				7	0.0											7	8	139
26	OUTSIDE ACUTE	6	12	51			S				7	6.0											8	2	148
26	OUTSIDE OBTUSE	6	12	51			S				7	0.0											7	8	139
	END DIAPHRAGM																								
60	HORIZONTAL	6	8	50							32	3.0											32	3	387
61	STIRRUP	4	102	54							7	2.0											7	9	527
62	STIRRUP	4	102	54							7	2.0											7	9	527
63	HORIZONTAL	4	36	50							32	1.0											32	1	771
64	STIRRUP	4	102	61	T						5	5.0	1	6.0	1	10.0							8	7	584
65	HORIZONTAL	4	12	50							32	1.0											32	1	257
66	TIES	4	102	56	T						1	9.0											2	4	159
67	HORIZONTAL TOP	4	8	51							33	6.0											33	12	182
69	OPENING FOR UTILITY	5	80	50							5	0.0											5	0	417
70	OPENING FOR UTILITY	5	20	50							2	0.0											2	0	42
	INTERMEDIATE DIAPHRAGM																								
80	BETWEEN GIRDERS	7	28	50							7	4.0											7	4	420
80	AT GIRDERS	7	32	50							6	0.0											6	0	392
81	STIRRUPS	4	126	71							0	5.0	3	7.0	3	7.0							7	4	618
82	BETWEEN GIRDERS	4	56	50							7	4.0											7	4	274
83	HORIZONTAL TOP	7	4	50							58	4.0											58	4	477
	ROADWAY SLAB																								
201	BOTTOM LONGITUDINAL	4	80	89							129	8.0	2	0.0									135	8	7249
202	TOP LONGITUDINAL	5	53	89				E			129	8.0	2	0.0									135	8	7499
203	BOTTOM TRANSVERSE	5	178	89							60	0.0											60	0	11138
203	BOTTOM TRANSVERSE	5	64	50					V	2	60	0.0											60	0	
											5	0.0											5	0	2169
204	TOP TRANSVERSE	5	356	51				E			31	6.0											32	1	11908
204	TOP TRANSVERSE AT ENDS	5	64	51				E	V	2	59	3.0											59	10	
											5	0.0											5	7	2182
205	TOP TRANSVERSE	5	390	51				E			6	5.0											6	12	2843
205	OBSERVATION AREA	5	28	51				E			10	5.0											10	12	321

S = Bar is included in substructure quantities.
L = Lump sum quantity.
T = Transverse or S = Seismic
E = Bar is to be epoxy coated.
V = Bar dimensions vary between dimensions shown on this line and the following line.

MARK NO.	LOCATION	SIZE	NO REQ'D	BEND TYPE	TIE OR STIR.	LUMP SUM	SUBSTR.	EPOXY COAT	VARIES	NO. EACH	DIMENSIONS (Out to Out) U Ft.	U In.	W Ft.	W In.	X Ft.	X In.	Y Ft.	Y In.	Z Ft.	Z In.	θ_1 Deg.	θ_2 Deg.	LENGTH Ft.	LENGTH In.	WEIGHT Lbs.
206	OBSERVATION AREA	5	14	50				E			9	6.0											9	6	139
207	OBSERVATION AREA	5	14	50							9	6.0											9	6	139
S3	PEDESTRIAN BARRIER	5	348	61				E			2	6.0	2	6.0									4	10	1767
S4	PEDESTRIAN BARRIER	5	176	61							1	3.0	1	3.0									2	4	435
	SIDEWALK																								
210	LONGITUDINAL	4	10	89							129	8.0	2	0.0									135	8	906
211	TRANSVERSE	4	176	56				E			6	3.0											7	4	867
212	OBSERVATION AREA	4	14	54				E			6	0.0											6	7	61
214	OBSERVATION AREA	4	6	50				E			8	0.0											8	0	32

STEEL REINFORCING BAR QUANTITIES NOT INCLUDED IN THIS BAR LIST

TRAFFIC BARRIER
BRIDGE GRATE INLETS
RETAINING WALL

BENDING DIAGRAMS

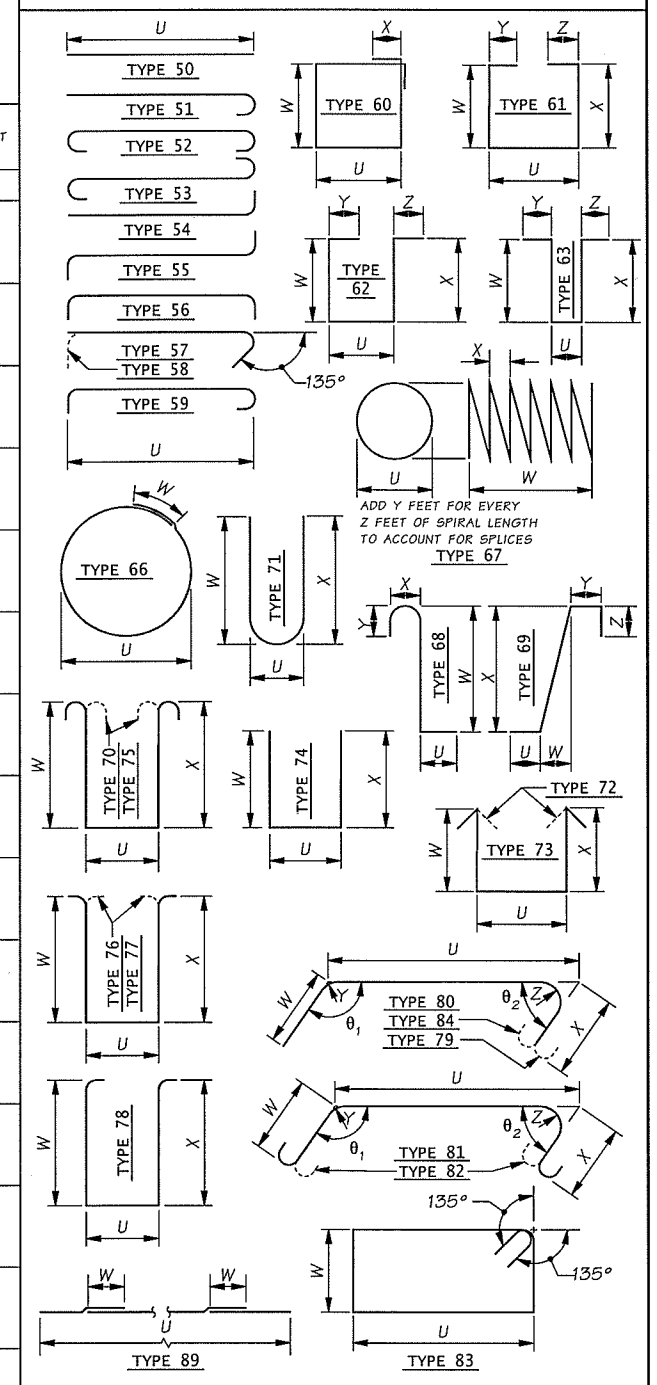

NOTE:

1. ALL REINFORCING BARS ON THIS SHEET SHALL BE AASHTO M-31 UNLESS SHOWN OTHERWISE.
2. REINFORCING FOR TRAFFIC BARRIERS NOT SHOWN IN THE BAR LIST. SEE TRAFFIC BARRIER SHEET.
3. BEND FOR TRANSVERSE BARS DUE TO ROADWAY CROWN CONDITIONS HAS NOT BEEN SHOWN. THESE BARS SHALL BE BENT AS REQUIRED TO CONFORM TO THE CONFIGURATION OF THE STRUCTURE.

$ NUMBER AND LENGTH OF BARS TO BE DETERMINED BY THE CONTRACTOR FROM PLANS.

SR 999 JOB NO. ____ SHEET 34

Bridge Design Engr.	Kapur, J	M:\Y-Team\Clark County Betts Bridge\Window files\Barlist1.WND
Supervisor	Kapur, J	
Designed By	MINNS, GEC 11/04	
Checked By	Mizumori, A 11/04	
Detailed By	Evans, P.D. 11/04	
Bridge Projects Engr.		
Prelim. Plan By		
Architect/Specialist		DATE / REVISION / BY / APP'D

REGION NO.	STATE	FED. AID PROJ. NO.	SHEET NO.	TOTAL SHEETS
10	WASH.	BRM-4231(004)		
JOB NUMBER				

BRIDGE AND STRUCTURES OFFICE

Washington State Department of Transportation

SALMON CREEK AVENUE
BETTS BRIDGE REPLACEMENT

BARLIST

BRIDGE SHEET NO. 34

SHEET 105 OF 105 SHEETS

Thu Nov 04 15:11:53 2004

54+20

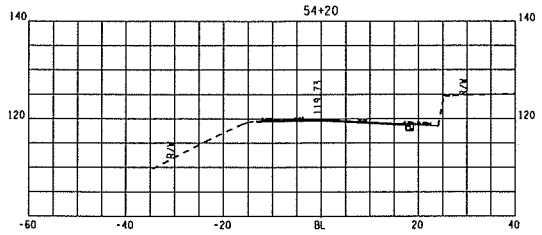

54+80

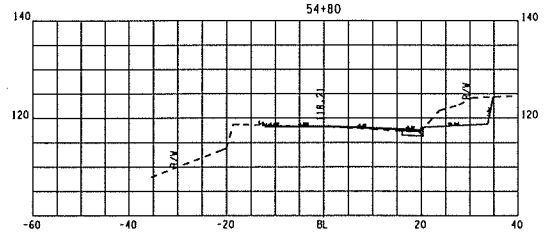

55+50

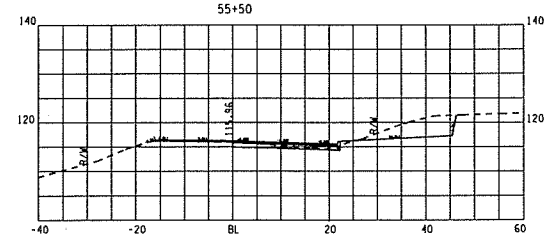

55+70

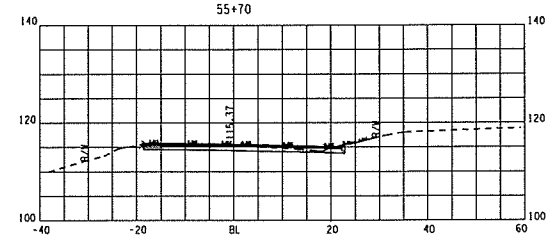

54+28.82

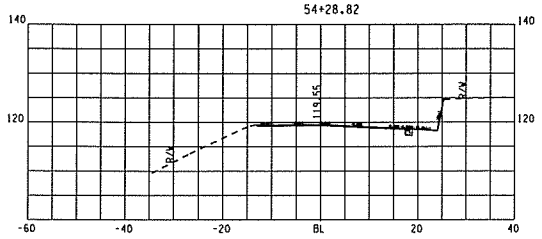

54+99.90

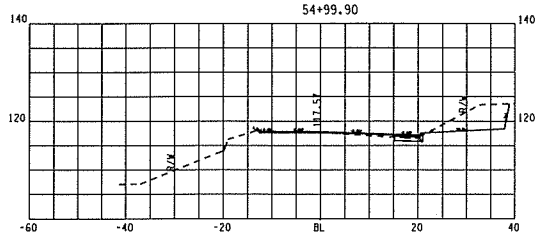

55+59.90

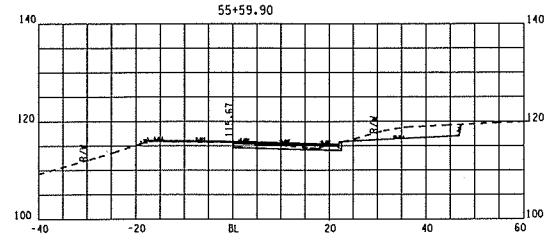

55+80

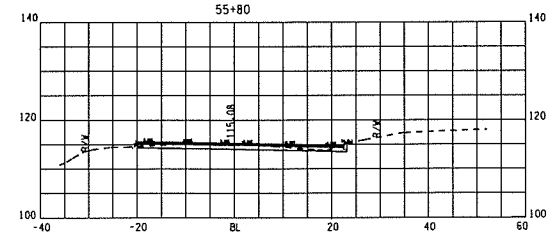

54+32.64

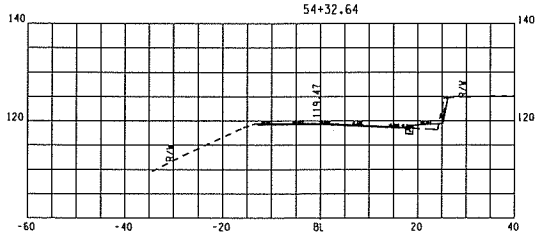

55+00

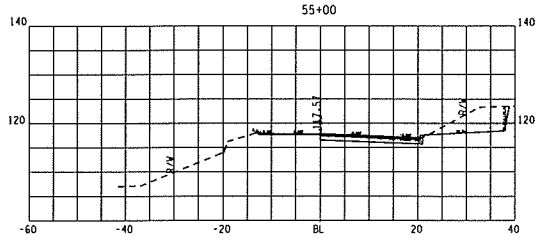

55+60

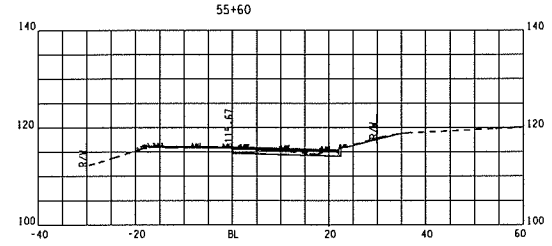

55+85

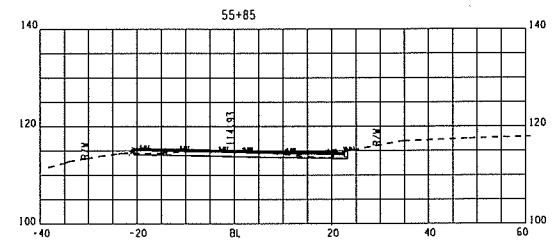

54+40

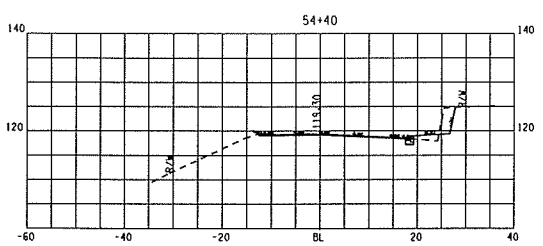

55+20

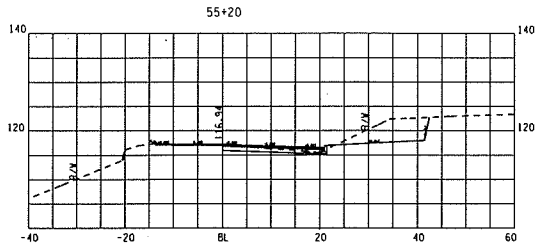

55+65.24

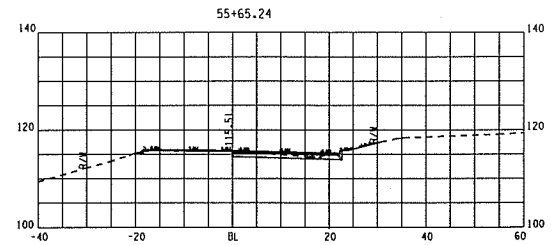

55+87.20

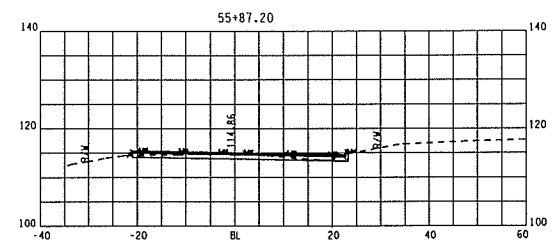

54+60

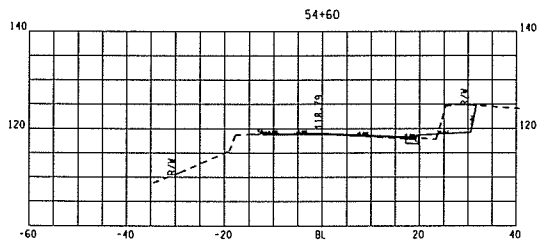

55+40

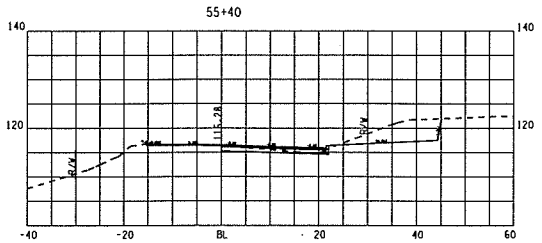

55+69.90

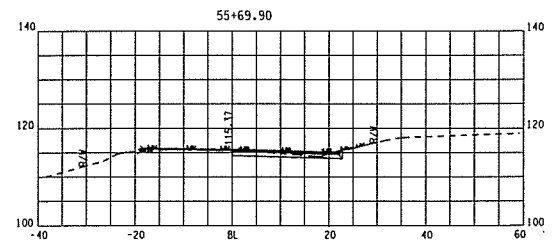

55+97.40

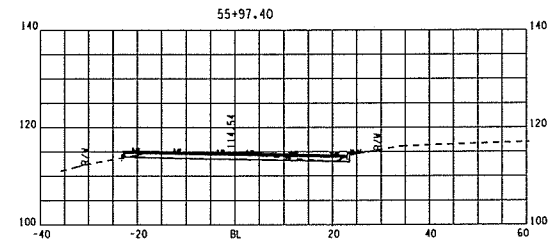

55+97.50

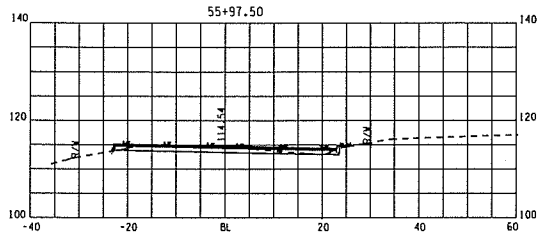

56+40

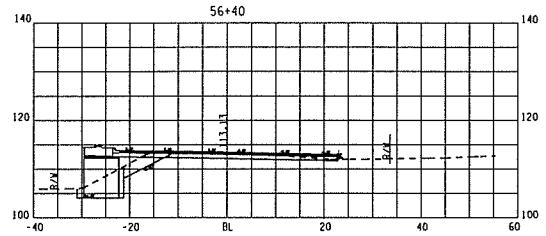

56+80

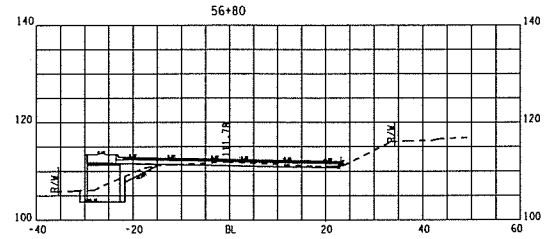

57+00

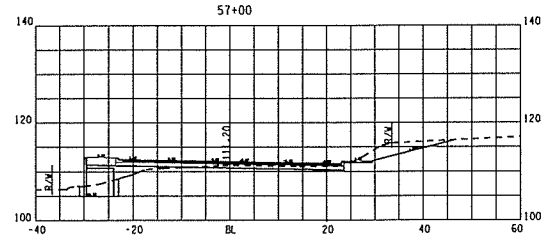

56+00

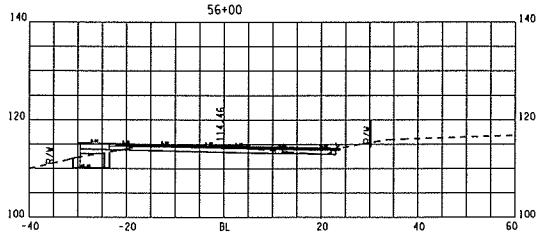

56+47.79

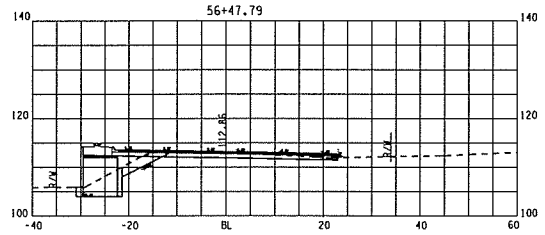

56+88.74

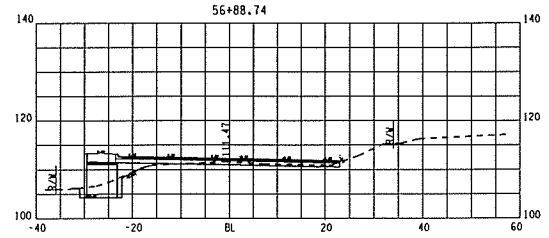

57+04.90

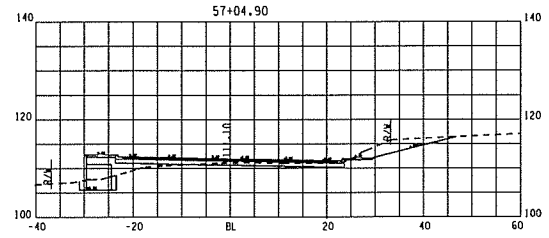

56+06

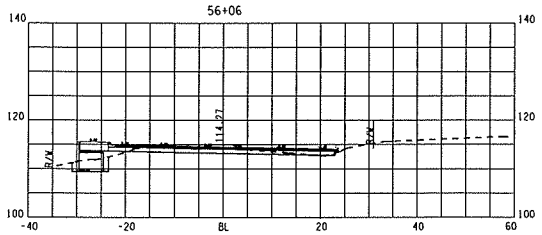

56+48.16

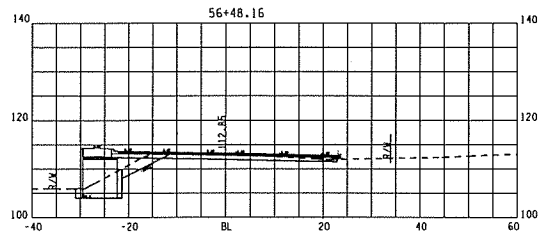

56+96.90

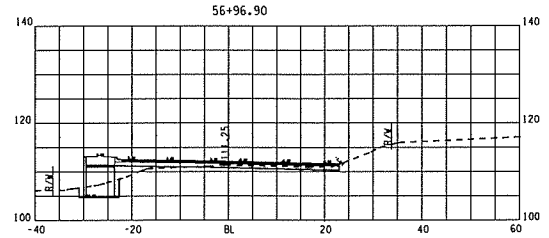

57+05

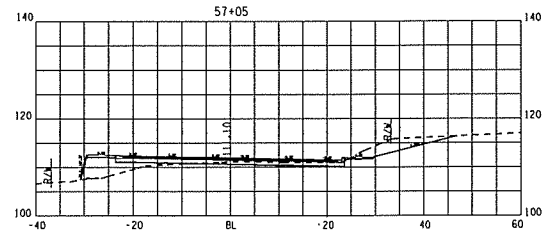

56+20

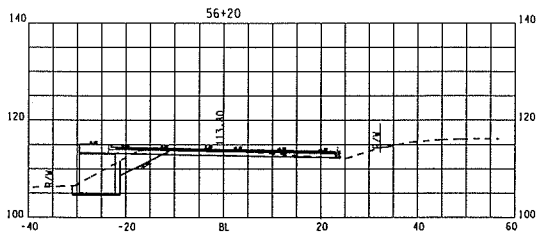

56+58.80

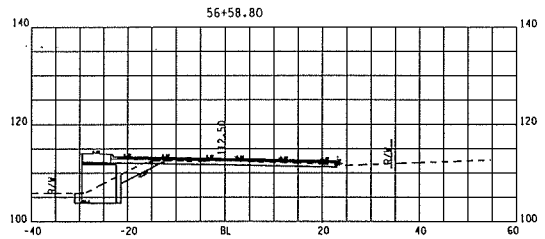

56+97

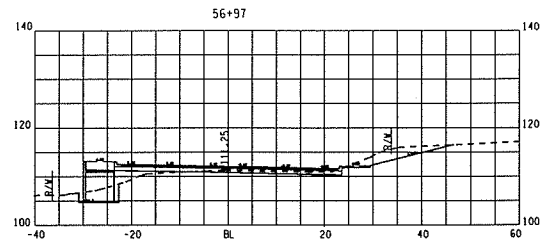

57+20

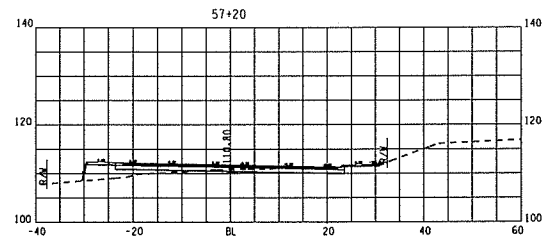

56+37.80

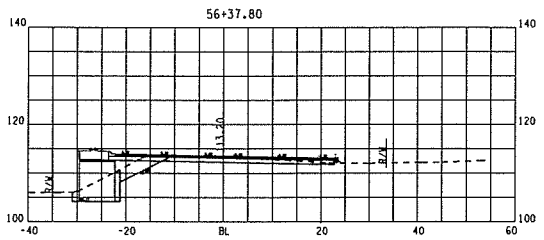

56+60

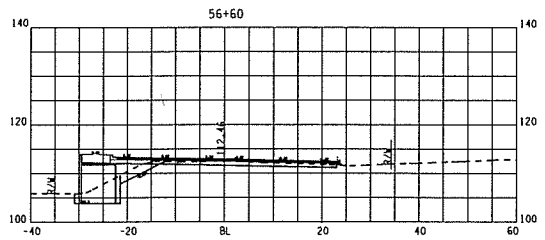

56+98.90

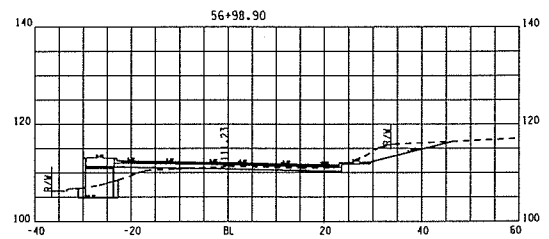

57+31.15

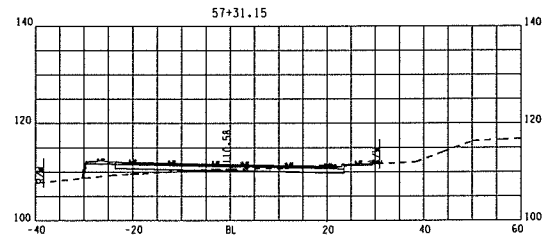

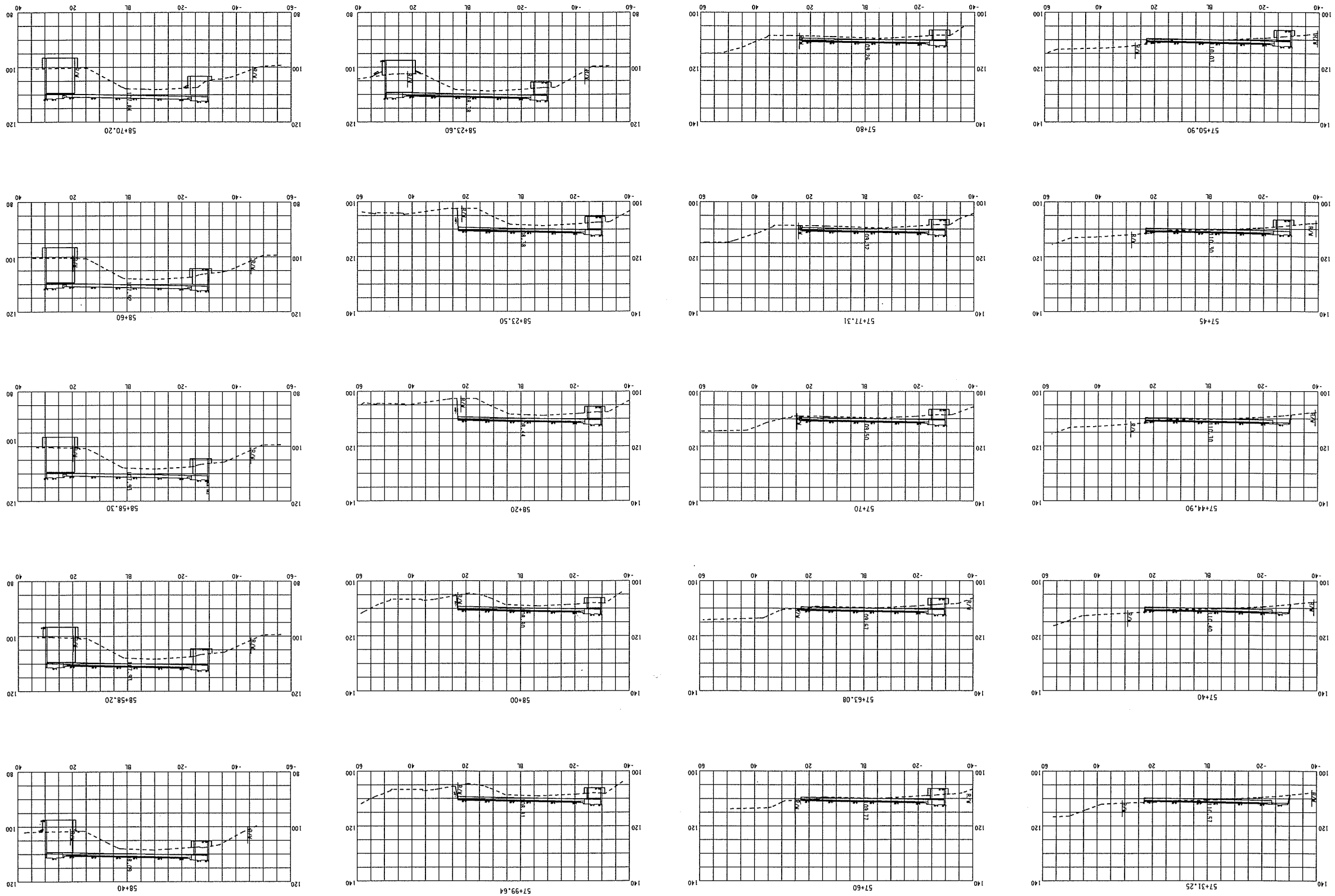
57+31.25
57+40
57+44.90
57+45
57+50.90
57+60
57+63.08
57+70
57+77.31
57+80
57+99.64
58+00
58+20
58+23.50
58+23.60
58+40
58+58.20
58+58.30
58+60
58+70.20

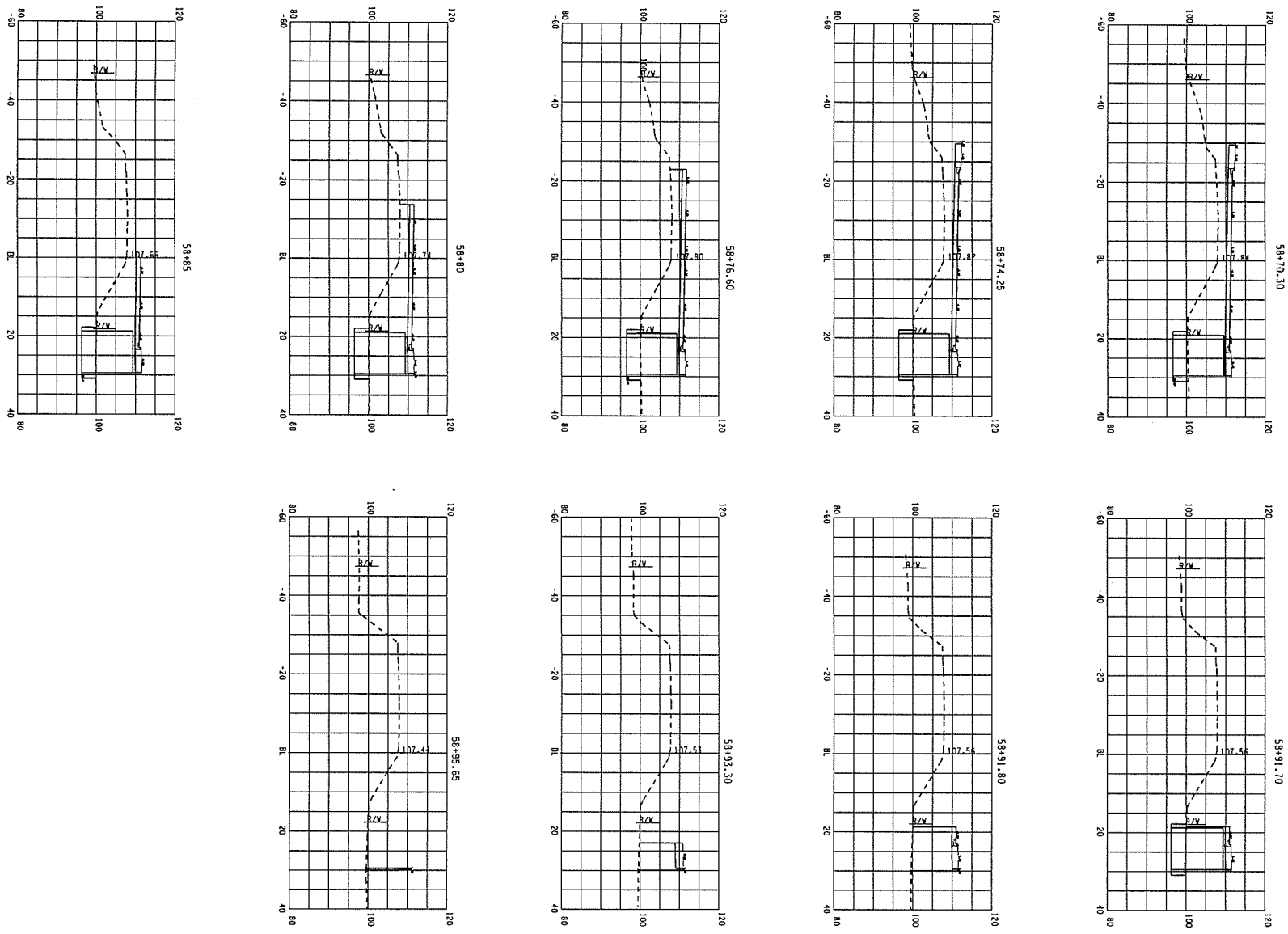
58+70.30
58+74.25
58+76.60
58+80
58+85
58+91.70
58+91.80
58+93.30
58+95.65
R/W
BL

60+04.50

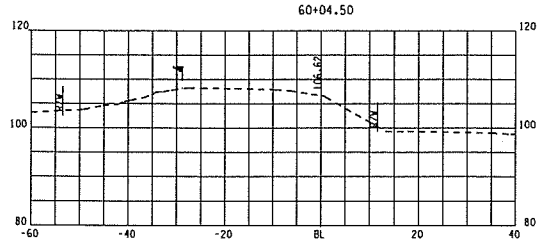

60+20

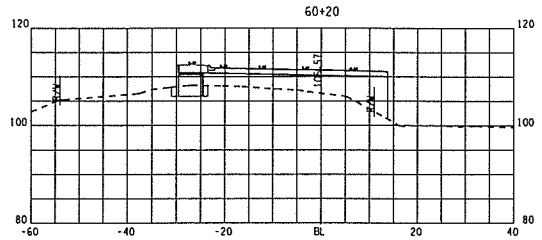

60+30.85

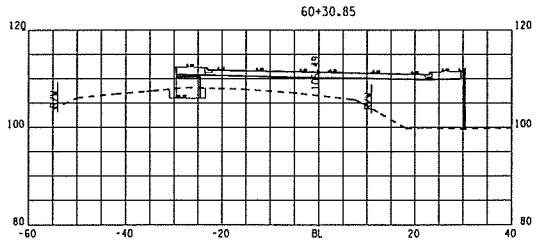

60+44.90

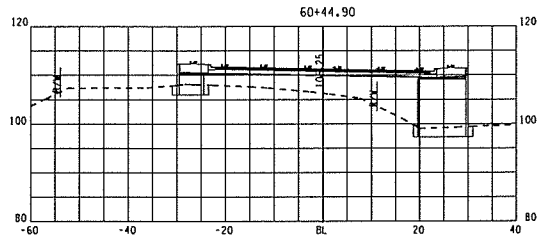

60+06.60

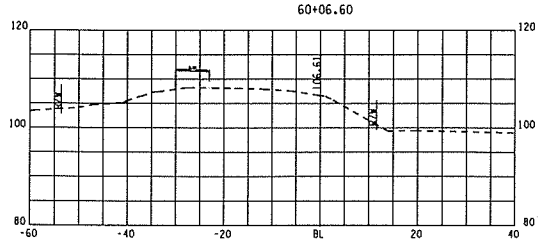

60+21.44

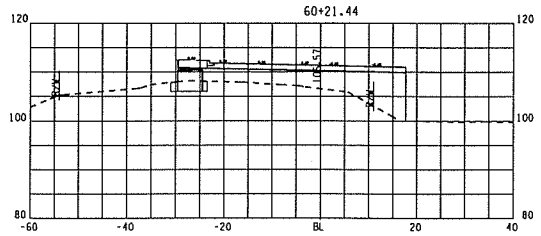

60+30.95

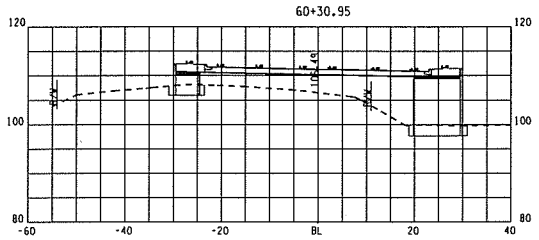

60+45

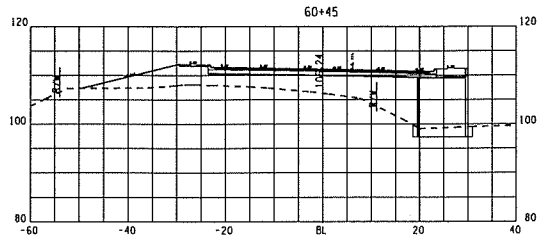

60+08.25

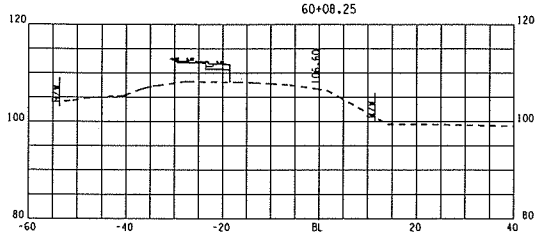

60+23.50

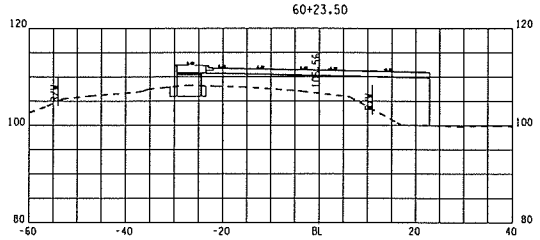

60+40

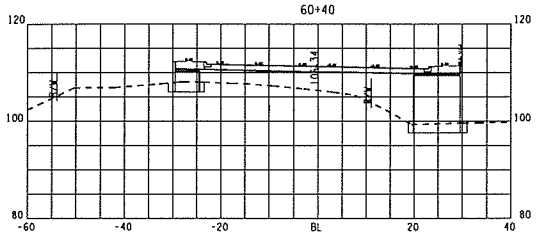

60+50

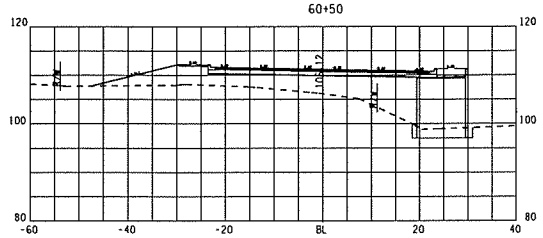

60+08.35

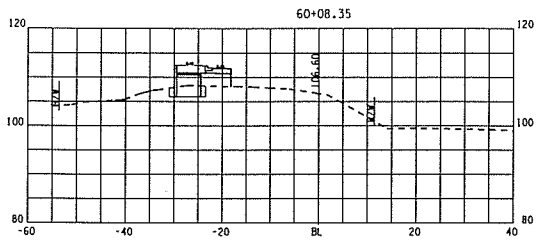

60+26.25

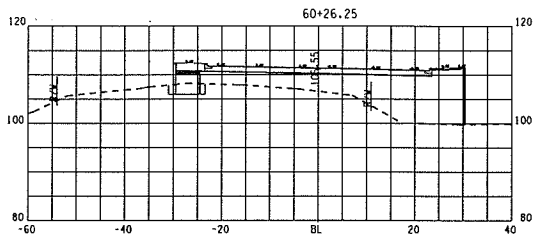

60+44.25

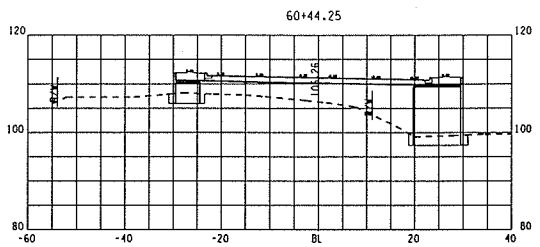

60+60

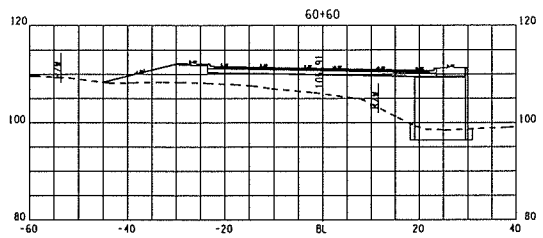

60+15

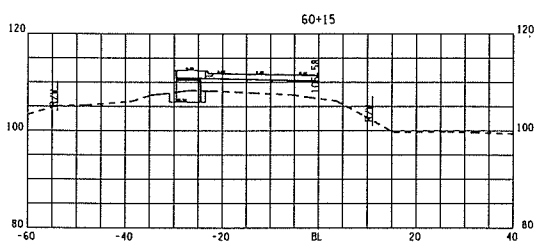

60+26.35

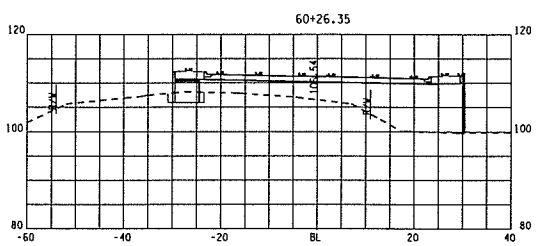

60+44.35

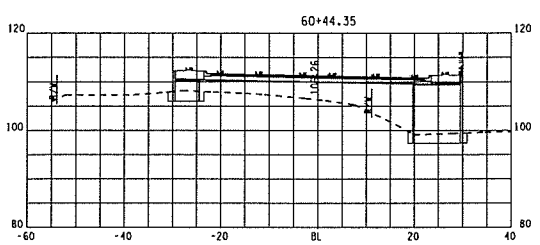

60+80

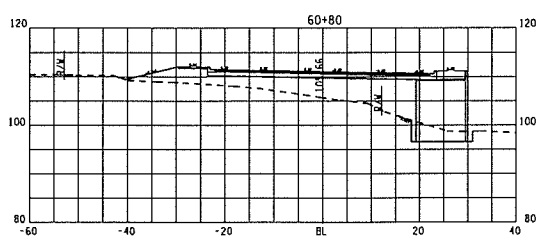

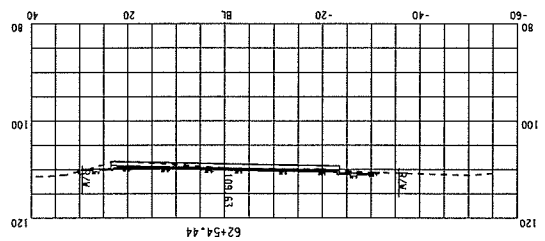
62+54.44
100.52
BL
20
-20
-40
-60
80
40
60
100
120

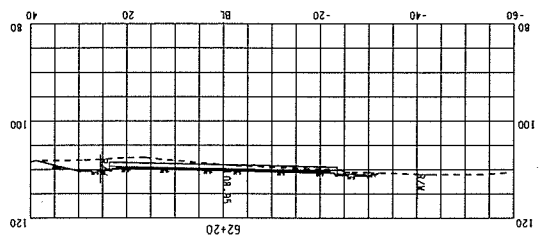
62+20
100.46
BL
20
-20
-40
-60
80
40
60
100
120

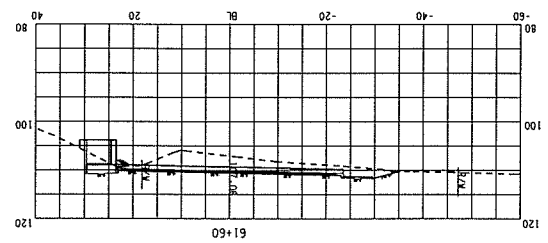
61+60
BL
20
-20
-40
-60
80
40
100
120

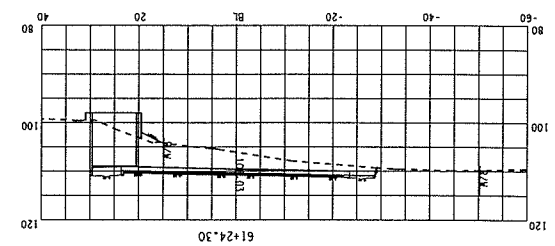
61+24.30
BL
20
-20
-40
-60
80
40
100
120

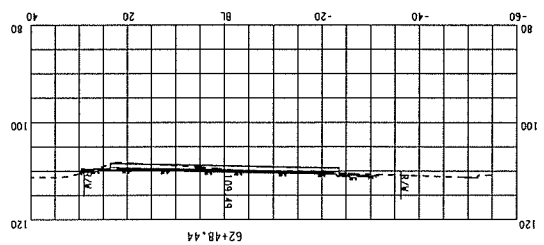
62+48.44
100.41
BL
20
-20
-40
-60
80
40
100
120

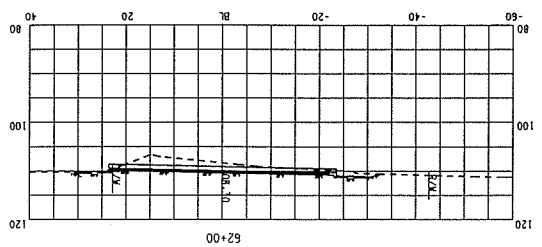
62+00
100.36
BL
20
-20
-40
-60
80
40
100
120

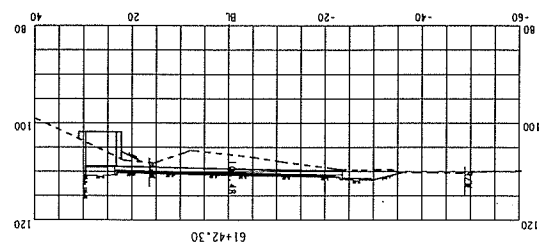
61+42.30
BL
20
-20
-40
-60
80
40
100
120

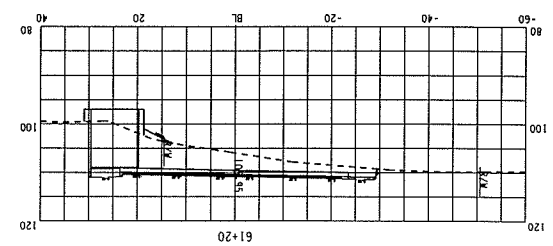
61+20
100.25
BL
20
-20
-40
-60
80
40
100
120

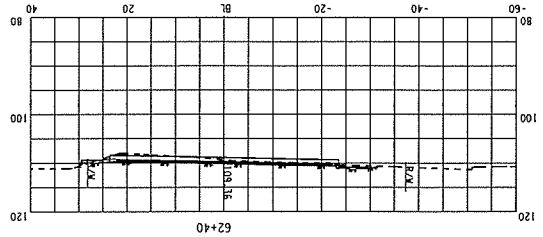
62+40
100.15
BL
20
-20
-40
-60
80
40
100
120

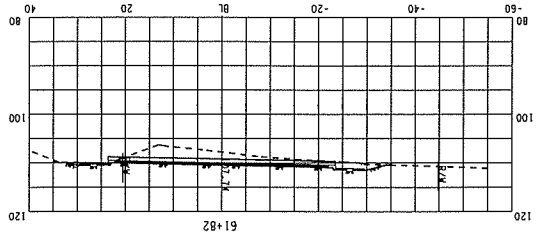
61+62
BL
20
-20
-40
-60
80
40
100
120

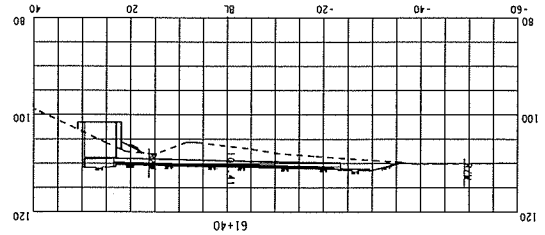
61+40
BL
20
-20
-40
-60
80
40
100
120

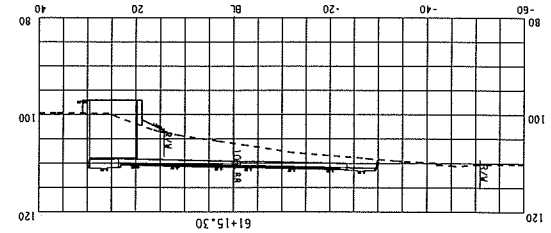
61+15.30
100.04
BL
20
-20
-40
-60
80
40
100
120

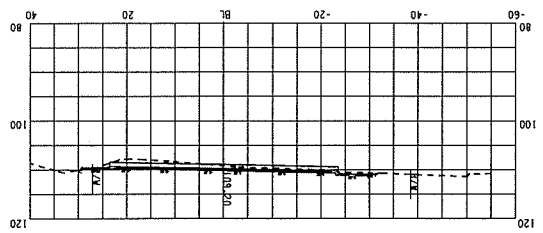
62+31.50
100.30
BL
20
-20
-40
-60
80
40
100
120

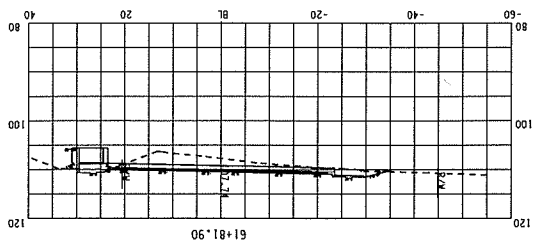
61+81.90
BL
20
-20
-40
-60
80
40
100
120

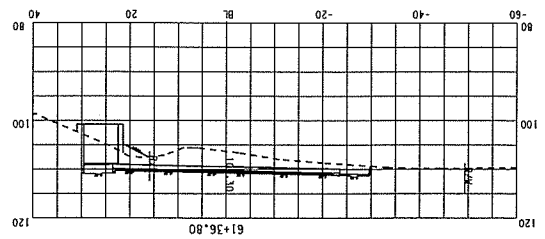
61+36.80
BL
20
-20
-40
-60
80
40
100
120

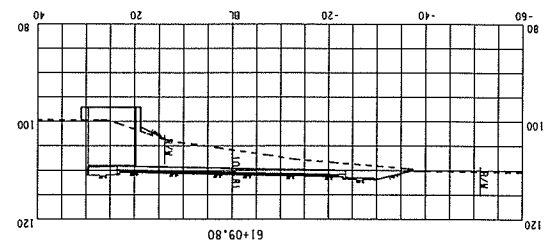
61+09.80
BL
20
-20
-40
-60
80
40
100
120

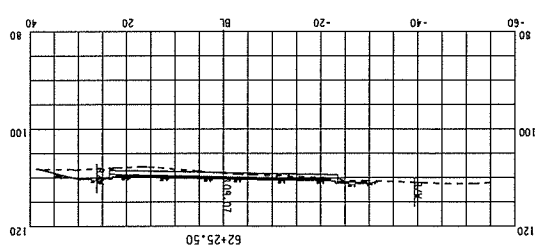
62+25.50
100.72
BL
20
-20
-40
-60
80
40
100
120

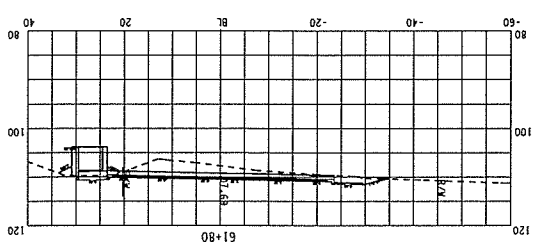
61+80
100.69
BL
20
-20
-40
-60
80
40
100
120

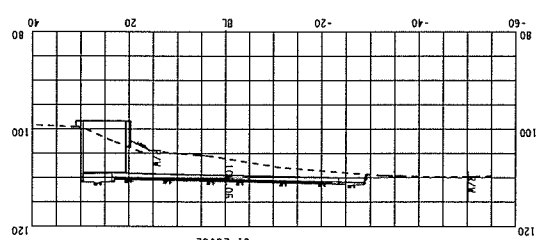
61+26.02
100.35
BL
20
-20
-40
-60
80
40
100
120

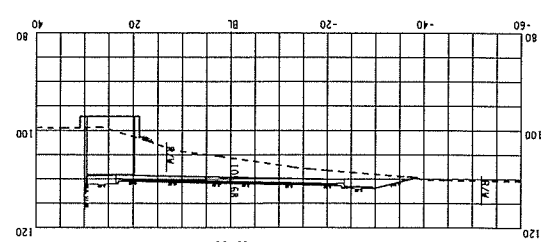
61+00
100.64
BL
20
-20
-40
-60
80
40
100
120

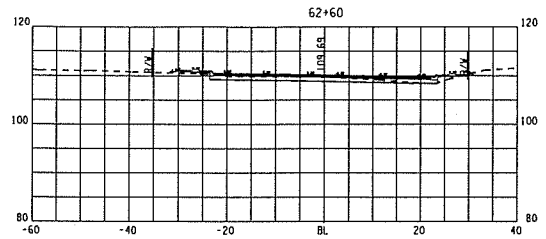
62+60
120
100
80
-60
-40
-20
BL
20
40

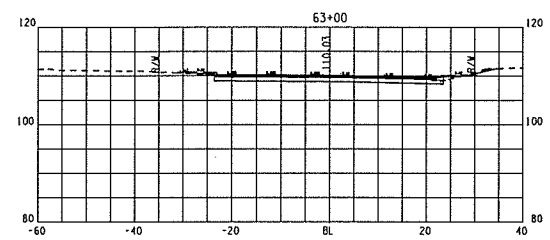
63+00
120
100
80
-60
-40
-20
BL
20
40

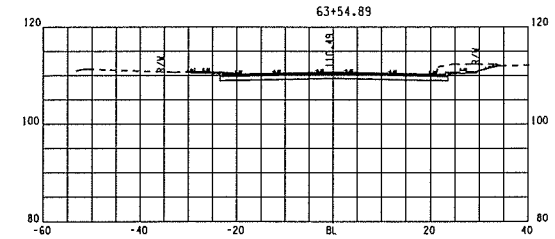
63+54.89
120
100
80
-60
-40
-20
BL
20
40

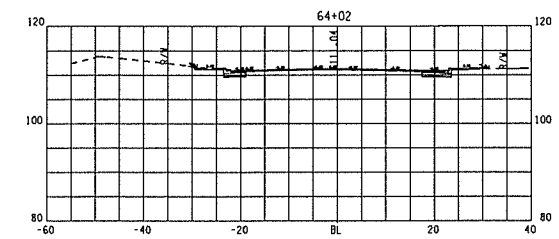
64+02
120
100
80
-60
-40
-20
BL
20
40

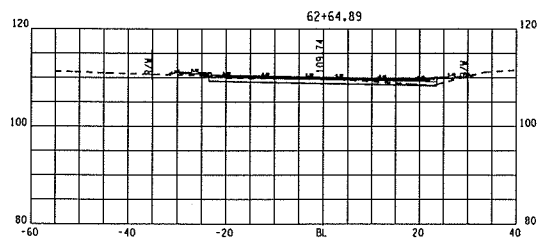
62+64.89
120
100
80
-60
-40
-20
BL
20
40

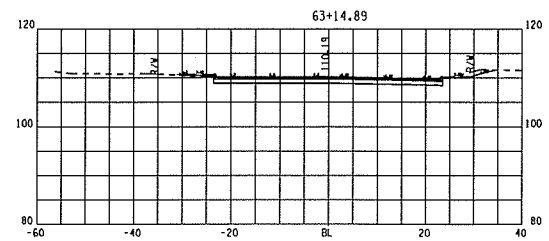
63+14.89
120
100
80
-60
-40
-20
BL
20
40

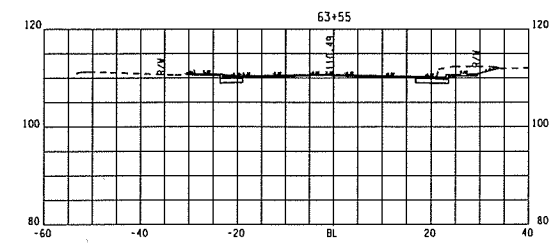
63+55
120
100
80
-60
-40
-20
BL
20
40

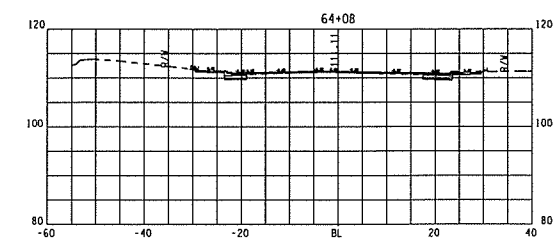
64+08
120
100
80
-60
-40
-20
BL
20
40

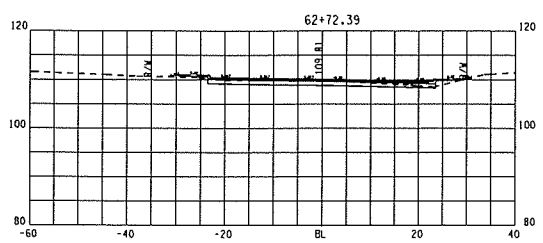
62+72.39
120
100
80
-60
-40
-20
BL
20
40

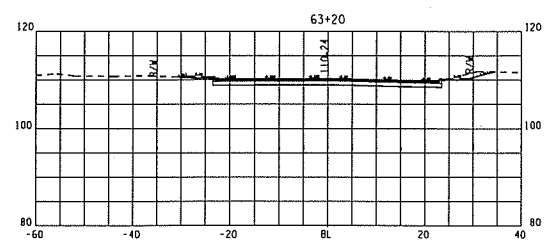
63+20
120
100
80
-60
-40
-20
BL
20
40

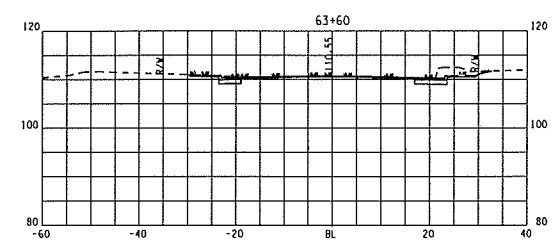
63+60
120
100
80
-60
-40
-20
BL
20
40

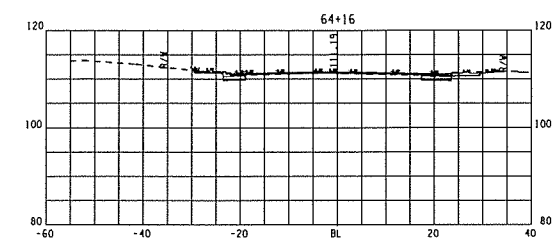
64+16
120
100
80
-60
-40
-20
BL
20
40

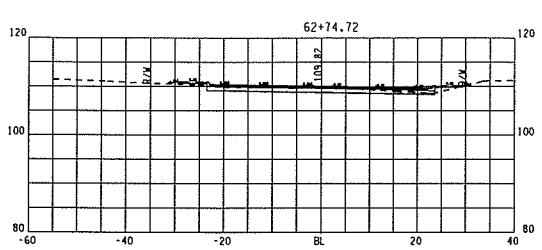
62+74.72
120
100
80
-60
-40
-20
BL
20
40

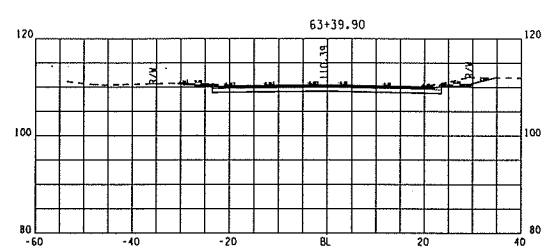
63+39.90
120
100
80
-60
-40
-20
BL
20
40

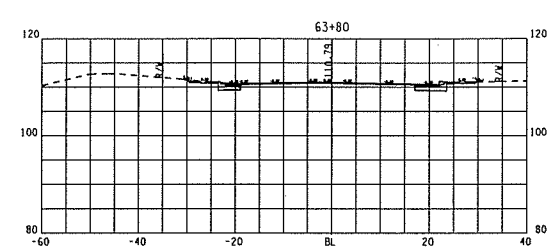
63+80
120
100
80
-60
-40
-20
BL
20
40

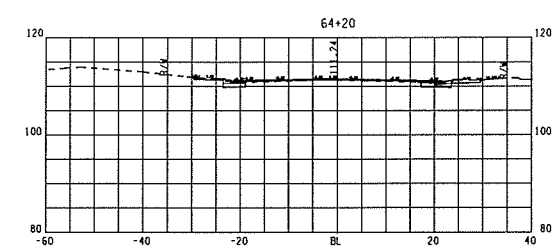
64+20
120
100
80
-60
-40
-20
BL
20
40

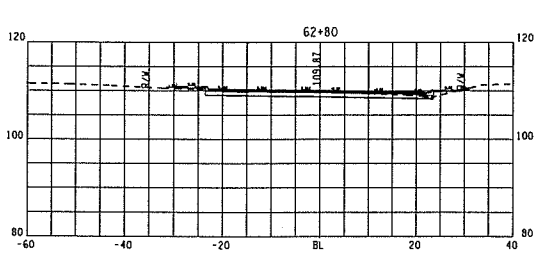
62+80
120
100
80
-60
-40
-20
BL
20
40

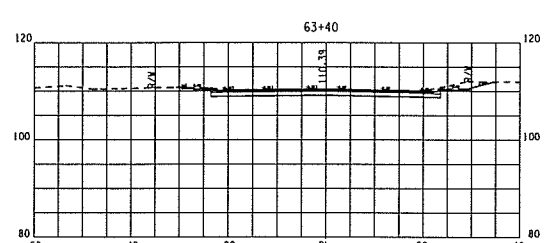
63+40
120
100
80
-60
-40
-20
BL
20
40

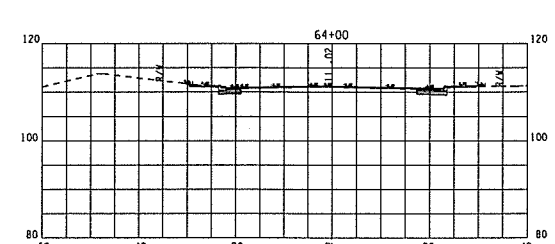
64+00
120
100
80
-60
-40
-20
BL
20
40

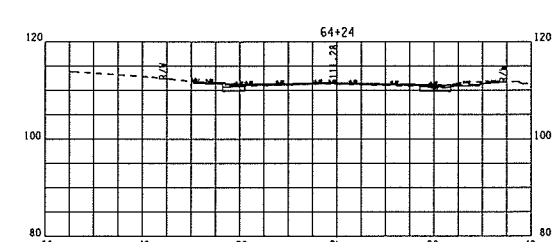
64+24
120
100
80
-60
-40
-20
BL
20
40

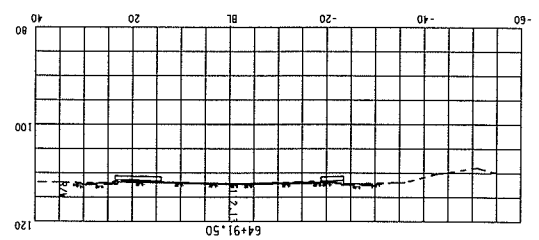
64+91.50

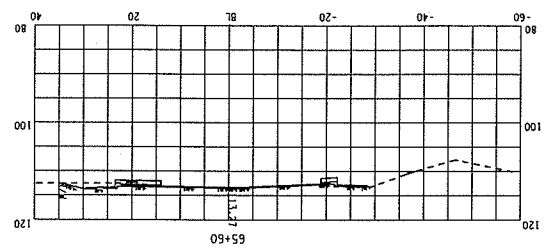
65+60

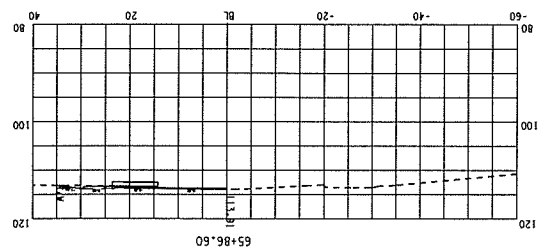
65+86.60

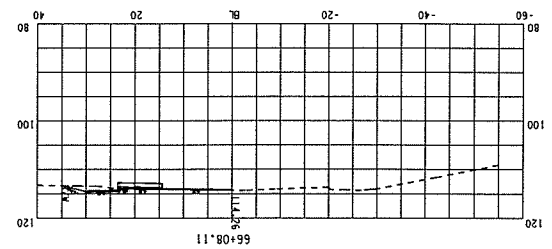
66+08.11

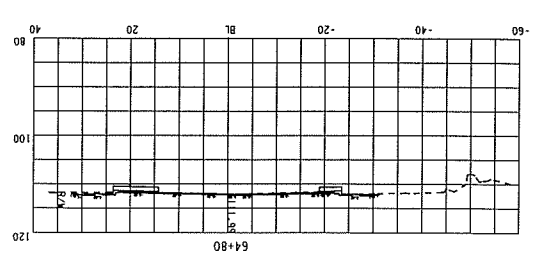
64+80

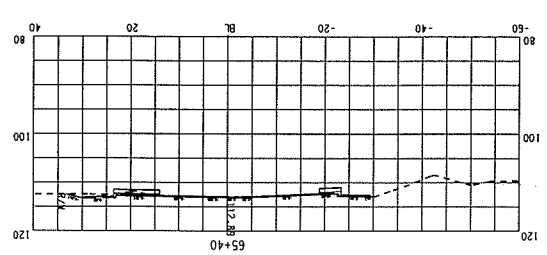
65+40

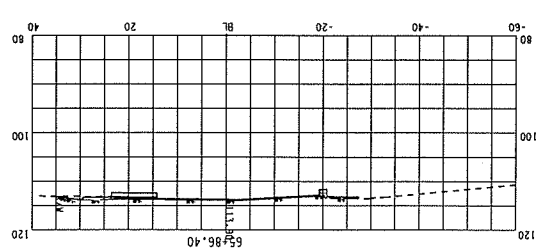
65+86.40

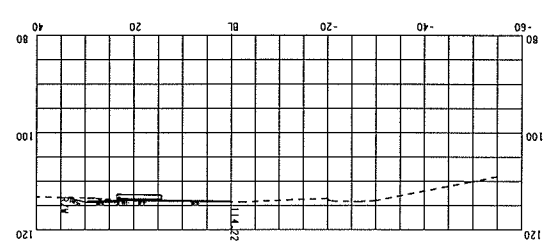
66+05.55

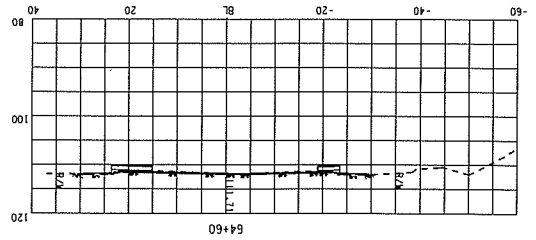
64+60

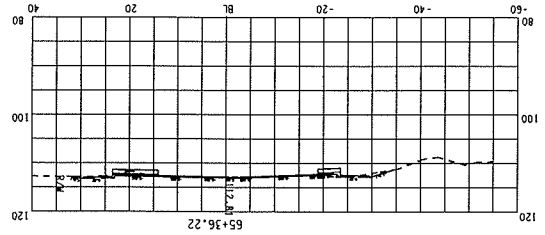
65+36.22

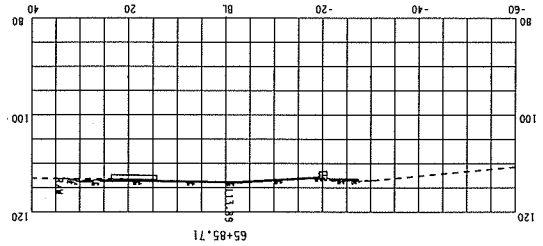
65+85.71

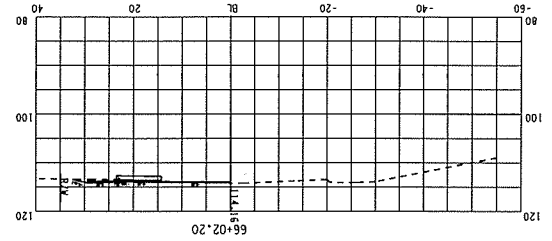
66+02.20

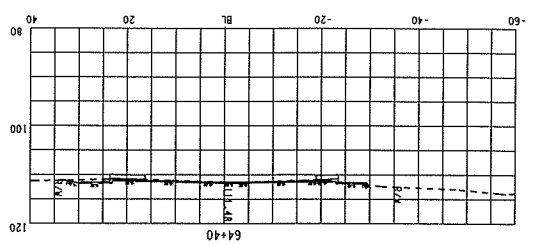
64+40

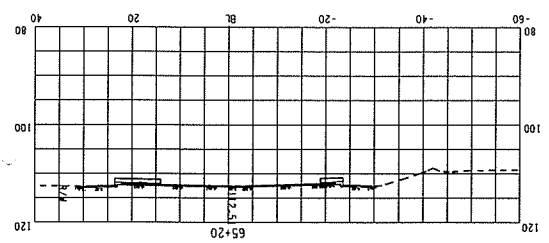
65+20

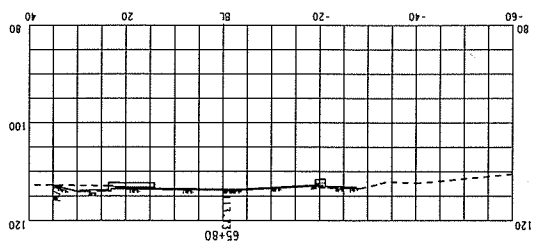
65+80

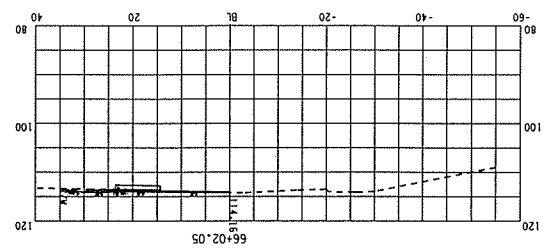
66+02.05

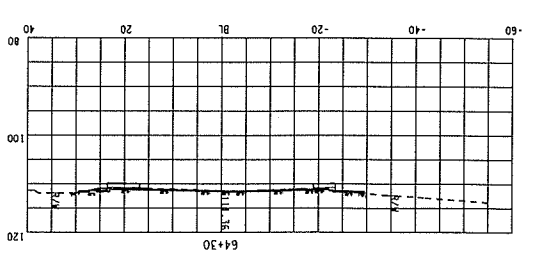
64+30

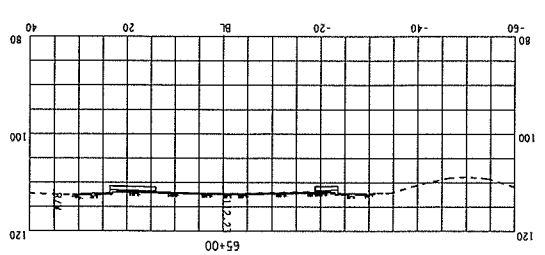
65+00

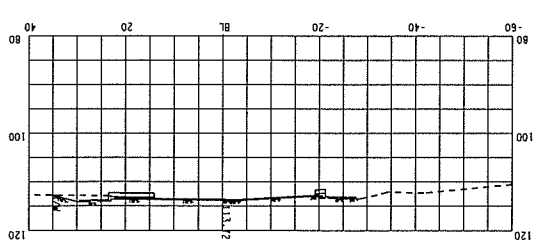
65+79.51

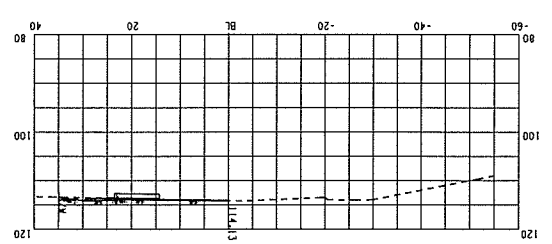
66+00

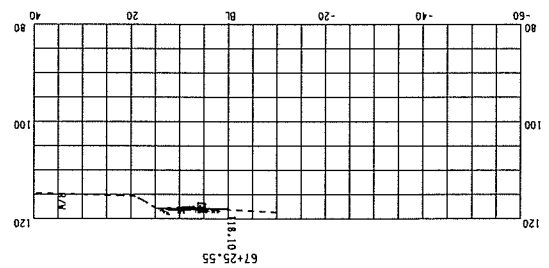
66+80
114.47
BL
120
100
80
60
-60
-40
-20
20
40

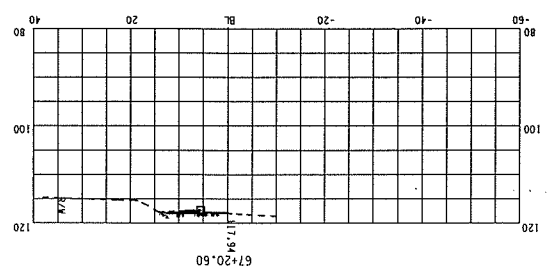
66+60
114.51
BL
120
100
80
60
-60
-40
-20
20
40

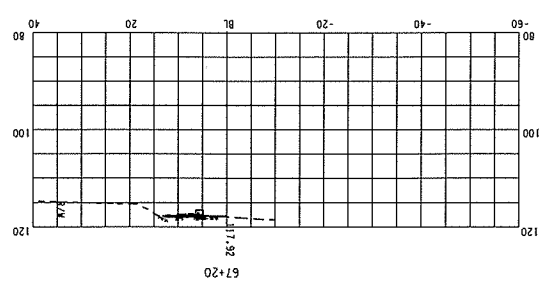
66+40
114.90
BL
120
100
80
60
-60
-40
-20
20
40

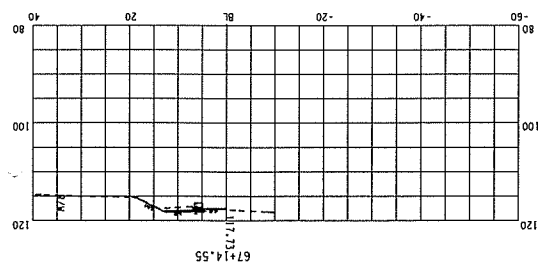
66+34.05
115
BL
120
100
80
60
-60
-40
-20
20
40

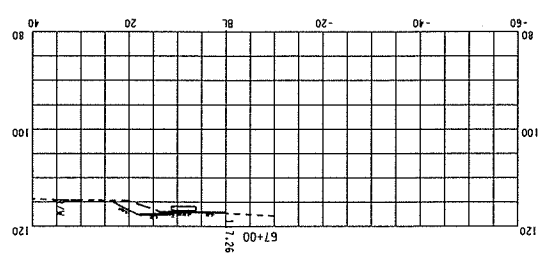
66+20
115
BL
120
100
80
60
-60
-40
-20
20
40

67+25.55
118.10
BL
120
100
80
60
-60
-40
-20
20
40

67+20.60
117.17
BL
120
100
80
60
-60
-40
-20
20
40

67+20
117.92
BL
120
100
80
60
-60
-40
-20
20
40

67+14.55
117.73
BL
120
100
80
60
-60
-40
-20
20
40

67+00
117.26
BL
120
100
80
60
-60
-40
-20
20
40