PRELIMINARY PLAN SET

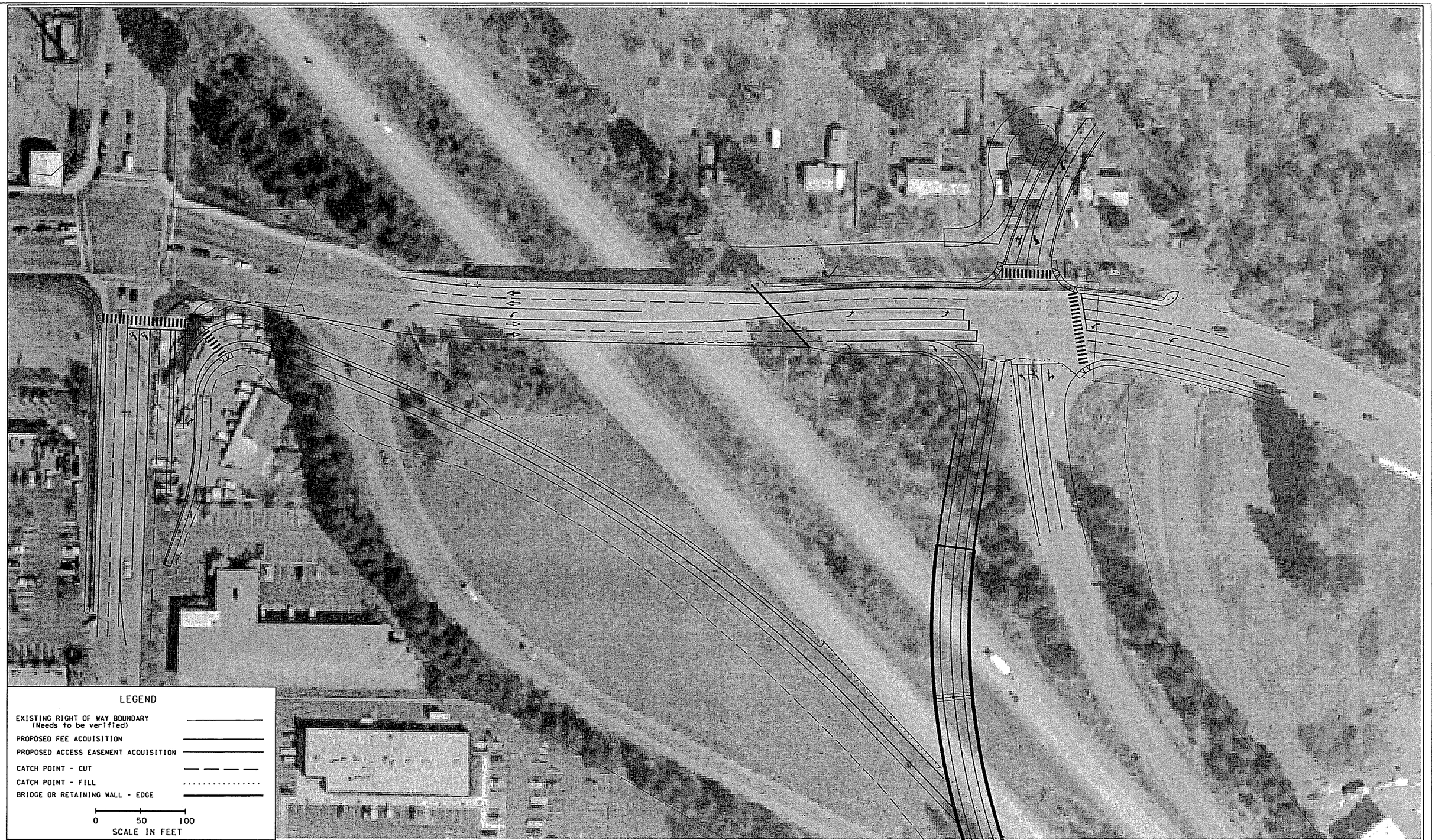

LEGEND

EXISTING RIGHT OF WAY BOUNDARY (Needs to be verified)

PROPOSED FEE ACQUISITION

PROPOSED ACCESS EASEMENT ACQUISITION

CATCH POINT - CUT

CATCH POINT - FILL

BRIDGE OR RETAINING WALL - EDGE

0 50 100
SCALE IN FEET

FILE NAME	x:\10592-wsdot\26692 salmon creek interchange\13-cadd\13.01-engdwgs\Plans\Aerial Displays\L2135_PS_RD_01.dgn						
TIME	12:49:11 PM				REGION NO. 10	STATE WASH	FED.AID PROJ.NO. XL2135
DATE	8/30/2005				JOB NUMBER L2135		
PLOTTED BY	lmerhaut						
DESIGNED BY	B. LEBLANC						
ENTERED BY	P. WAGGONER						
CHECKED BY	CHECKED				CONTRACT NO.		LOCATION NO.
PROJ. ENGR.	PORJ. ENG.						
REGIONAL ADM.	REGIONAL ADM	REVISION	DATE	BY			

DATE
P.E. STAMP BOX

BRENDAN E. LeBLANC
STATE OF WASHINGTON
6088
REGISTERED PROFESSIONAL ENGINEER
EXPIRES APR. 29, 2006

DATE
P.E. STAMP BOX

Washington State Department of Transportation

SALMON CREEK
134th INTERCHANGE
CLARK COUNTY

AERIAL DISPLAY

PLOT1
1

SHEET 1 OF 3 SHEETS

PRELIMINARY PLAN SET

FILE NAME	x:\10592-wsdot\26692 salmon creek interchange\13-cadd\13.01-engdwgs\plans\aerial displays\L2135_PS_RD_02.dgn			
TIME	12:49:16 PM			
DATE	8/30/2005			
PLOTTED BY	lmerhaut			
DESIGNED BY	B. LEBLANC			
ENTERED BY	P. WAGGONER			
CHECKED BY	CHECKED			
PROJ. ENGR.	PORJ. ENG.			
REGIONAL ADM.	REGIONAL ADM	REVISION	DATE	BY

REGION NO.	STATE	FED.AID PROJ.NO.
10	WASH	XL2135
JOB NUMBER L2135		
CONTRACT NO.		LOCATION NO.

DATE
P.E. STAMP BOX

BRENDAN E. LeBLANC
STATE OF WASHINGTON
REGISTERED PROFESSIONAL ENGINEER
EXPIRES APR. 29, 2006

DATE
P.E. STAMP BOX

Washington State Department of Transportation

SALMON CREEK
134th INTERCHANGE
CLARK COUNTY

AERIAL DISPLAY

PLOT1 2

SHEET 2 OF 3 SHEETS

PRELIMINARY

PLAN SET

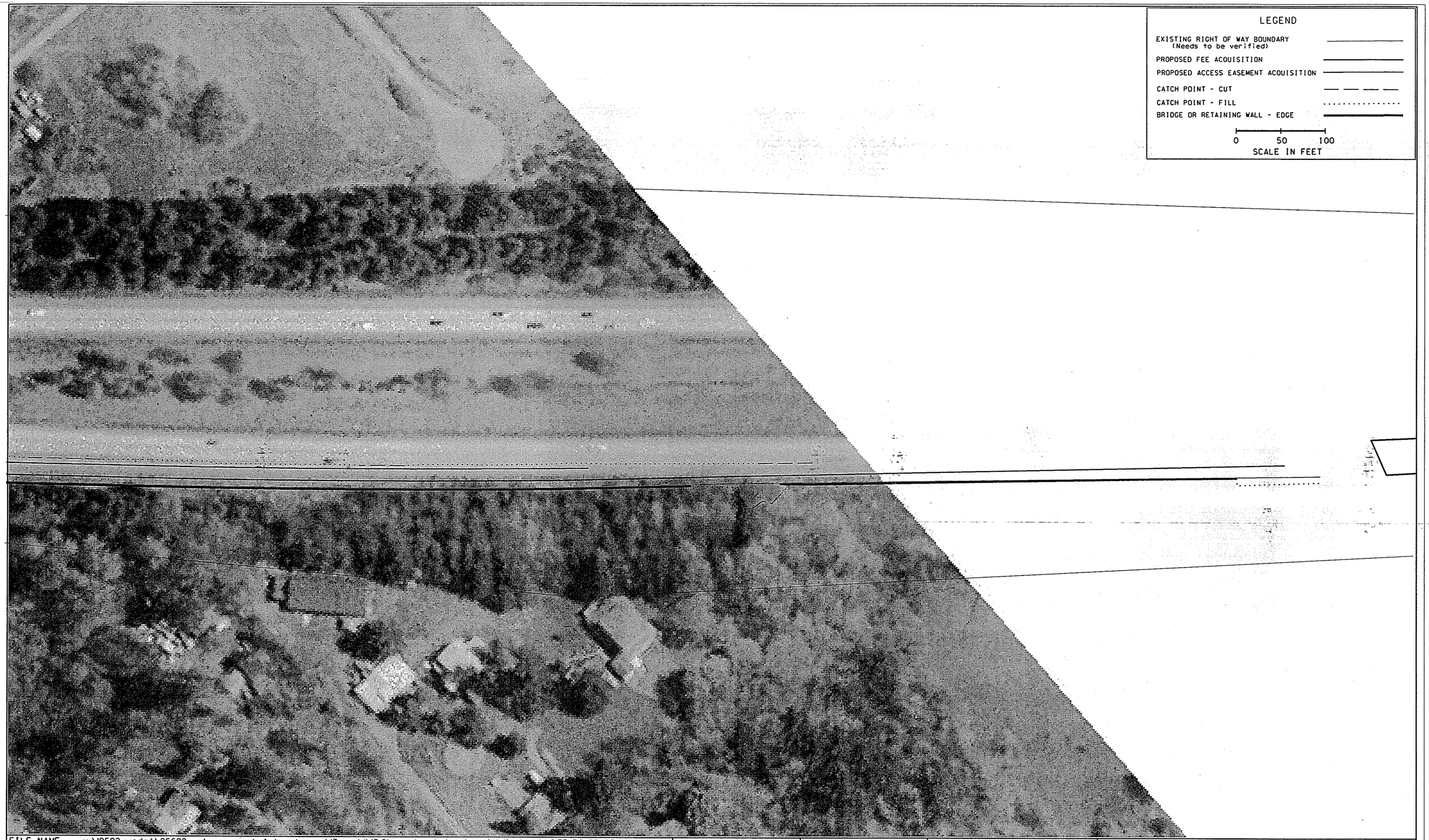

LEGEND

EXISTING RIGHT OF WAY BOUNDARY (Needs to be verified)

PROPOSED FEE ACQUISITION

PROPOSED ACCESS EASEMENT ACQUISITION

CATCH POINT - CUT

CATCH POINT - FILL

BRIDGE OR RETAINING WALL - EDGE

0 50 100
SCALE IN FEET

FILE NAME	x:\10592-wsdot\26692 salmon creek interchange\13-cadd\13.01-engdwgs\plans\aerial displays\L2135_PS_RD_03.dgn
TIME	12:49:20 PM
DATE	8/30/2005
PLOTTED BY	lmerhaut
DESIGNED BY	B. LEBLANC
ENTERED BY	P. WAGGONER
CHECKED BY	CHECKED
PROJ. ENGR.	PORJ. ENG.
REGIONAL ADM.	REGIONAL ADM

REVISION	DATE	BY

REGION NO.	STATE	FED. AID PROJ. NO.
10	WASH	XL2135
JOB NUMBER		
L2135		
CONTRACT NO.		LOCATION NO.

P.E. STAMP BOX DATE

BRANDON E. LEBLANC
STATE OF WASHINGTON
40342
REGISTERED
PROFESSIONAL ENGINEER
EXPIRES APR. 29, 2006

P.E. STAMP BOX DATE

Washington State
Department of Transportation

SALMON CREEK
134th INTERCHANGE
CLARK COUNTY

AERIAL DISPLAY

PLOT1
3

SHEET 3 OF 3 SHEETS

PRELIMINARY PLAN SET

INDEX

SHEET NO.	PLAN REFERENCE NO.	TITLE
1		INDEX
1 - 13		ROADWAY SECTIONS
1 - 6		STAGE CONSTRUCTION PLANS
1 - 2		RIGHT OF WAY PLANS
1 - 7		ALIGNMENT/SITE PREPARATION PLANS
1 - 7		PROFILES
1 - 5		EROSION AND SEDIMENT CONTROL
1 - 4		STORMWATER DRAINAGE PLAN
1 - 6		PAVING PLAN
1 - 2		PAVEMENT MARKING PLAN
1 - 8		RETAINING WALLS
1 - 2		BRIDGE PLANS

PRELIMINARY PLAN SET

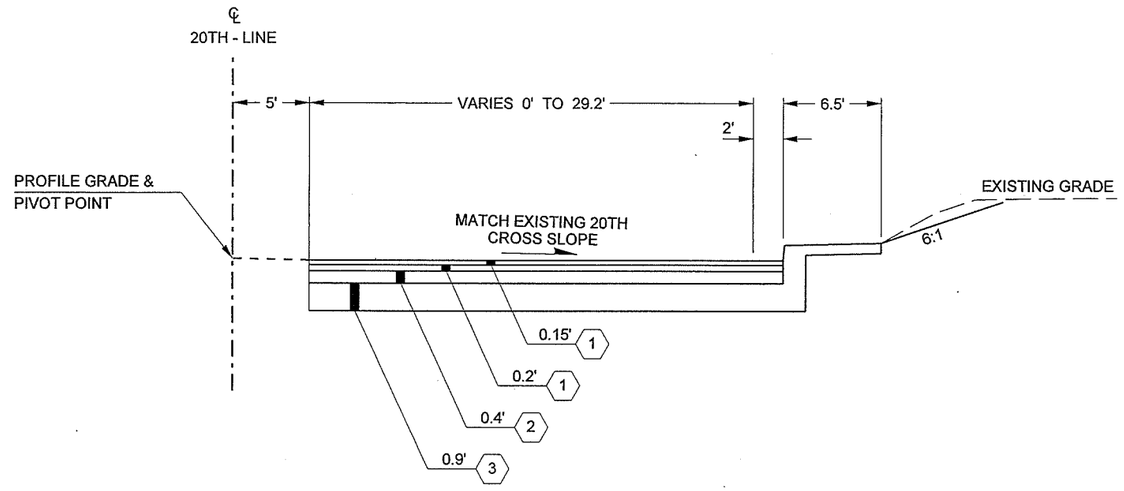

ROADWAY SECTION A

20TH 0+00 TO 20TH 1+35

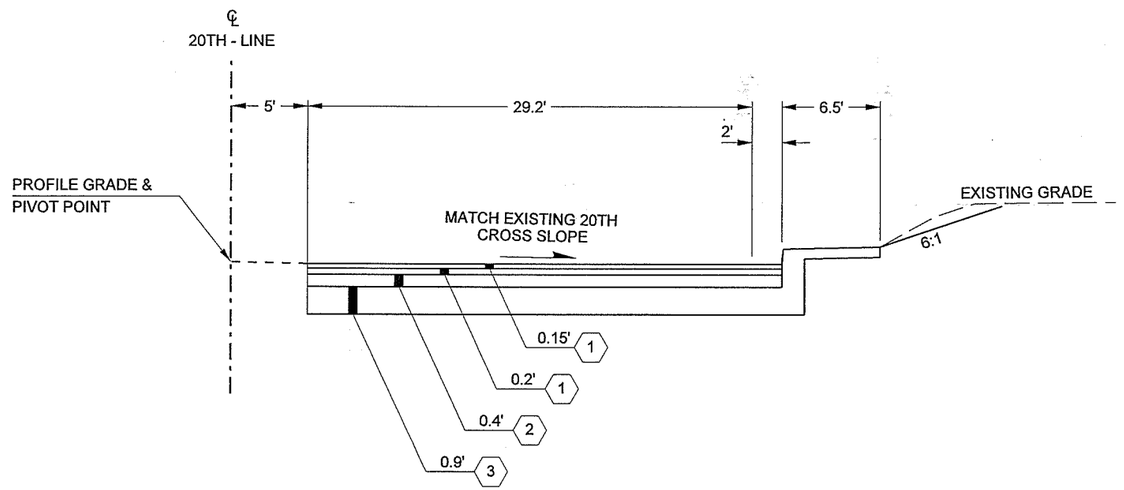

ROADWAY SECTION B

20TH 1+35 TO 20TH 1+85

1. HMA CL. 3/4 IN. PG 64-22
2. HMA CL. 1/2 IN. PG 64-22
3. CRUSHED SURFACING BASE COURSE
4. ROADWAY EXCAVATION
5. EMBANKMENT COMPACTION

NOTES:

ALL DEPTHS SHOWN ARE FINAL COMPACTED DEPTHS. SEE STANDARD SPECIFICATIONS FOR MAXIMUM LIFT DEPTHS.

SEE PAVING PLAN FOR VARIABLE WIDTHS.

CUT AND FILL SECTIONS AS SHOWN ARE TYPICAL TO BOTH SIDES.

NST = NOT STEEPER THAN

FILE NAME	x:\10592-wsdot\26692 salmon creek interchange\13-cadd\13.01-engdwgs\Plans\Typicals\L2135-PS-RS.dgn						
TIME	1:27:37 PM				REGION NO. / STATE	FED.AID PROJ.NO.	
DATE	8/30/2005				10 WASH		
PLOTTED BY	lmerhaut				JOB NUMBER		
DESIGNED BY	B. LEBLANC				L2135		
ENTERED BY	P. WAGGONER				CONTRACT NO.	LOCATION NO.	
CHECKED BY	CHECKED						
PROJ. ENGR.	PORJ. ENG.						
REGIONAL ADM.	REGIONAL ADM	REVISION	DATE	BY			

DATE
P.E. STAMP BOX

BRENDAN E. LeBLANC
STATE OF WASHINGTON
36051
REGISTERED PROFESSIONAL ENGINEER
EXPIRES APR. 29, 2006
DATE
P.E. STAMP BOX

Washington State
Department of Transportation

SALMON CREEK
134th INTERCHANGE
CLARK COUNTY

ROADWAY SECTIONS

PLOT1
1

SHEET 1 OF 13 SHEETS

PRELIMINARY PLAN SET

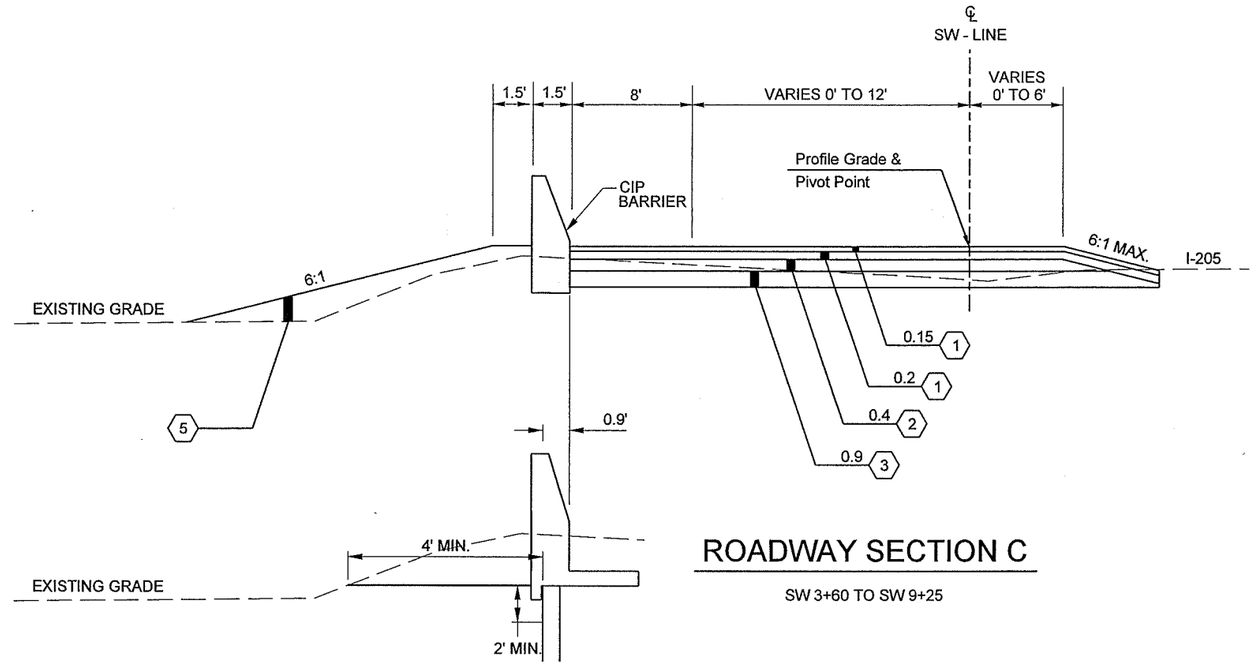

ROADWAY SECTION C

SW 3+60 TO SW 9+25

SW 5+20 TO SW 9+25

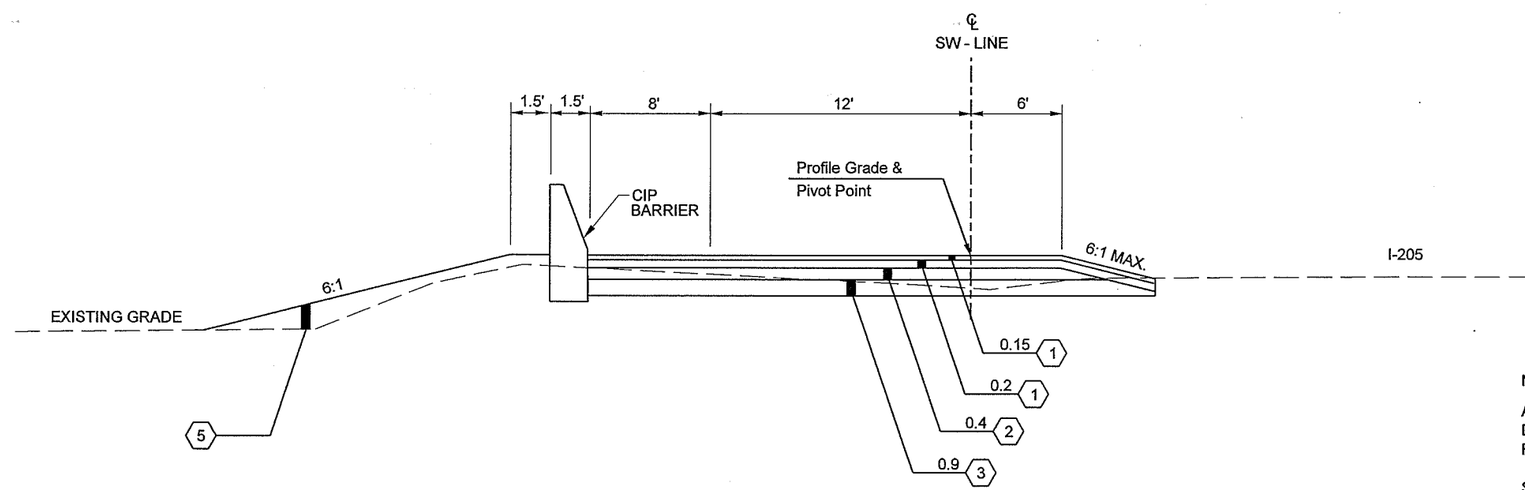

ROADWAY SECTION D

SW 9+25 TO SW 10+00

1. HMA CL. 3/4 IN. PG 64-22
2. HMA CL. 1/2 IN. PG 64-22
3. CRUSHED SURFACING BASE COURSE
4. ROADWAY EXCAVATION
5. EMBANKMENT COMPACTION

NOTES:

ALL DEPTHS SHOWN ARE FINAL COMPACTED DEPTHS. SEE STANDARD SPECIFICATIONS FOR MAXIMUM LIFT DEPTHS.

SEE PAVING PLAN FOR VARIABLE WIDTHS.

CUT AND FILL SECTIONS AS SHOWN ARE TYPICAL TO BOTH SIDES.

NST = NOT STEEPER THAN

FILE NAME	x:\10592-wsdot\26692 salmon creek interchange\13-cadd\13.01-engdwgs\Plans\Typicals\L2135-PS-RS.dgn				REGION NO.	STATE	FED.AID PROJ.NO.
TIME	1:27:36 PM				10	WASH	
DATE	8/30/2005				JOB NUMBER		
PLOTTED BY	lmerhaut				L2135		
DESIGNED BY	B. LEBLANC				CONTRACT NO.		LOCATION NO.
ENTERED BY	P. WAGGONER						
CHECKED BY	CHECKED						
PROJ. ENGR.	PROJ. ENG.						
REGIONAL ADM.	REGIONAL ADM	REVISION	DATE	BY			

DATE
P.E. STAMP BOX

BRENDAN E. LeBLANC
STATE OF WASHINGTON
40082
REGISTERED PROFESSIONAL ENGINEER
EXPIRES APR. 29, 2006
DATE
P.E. STAMP BOX

Washington State
Department of Transportation

SALMON CREEK
134th INTERCHANGE
CLARK COUNTY

ROADWAY SECTIONS

PLOT2
2

SHEET 2 OF 13 SHEETS

PRELIMINARY PLAN SET

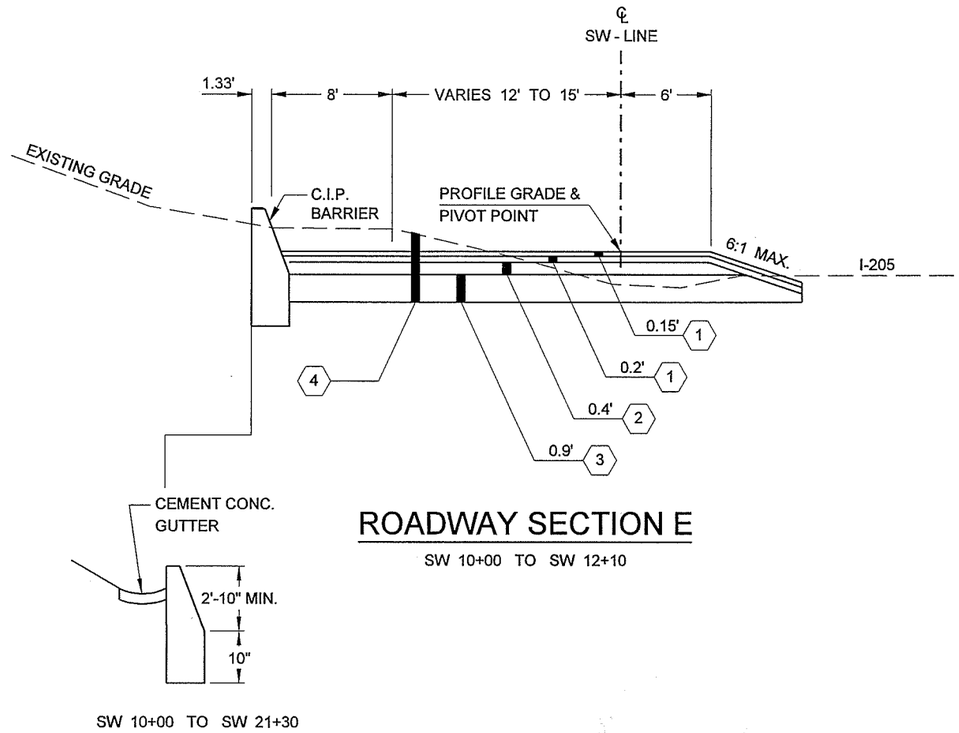

ROADWAY SECTION E

SW 10+00 TO SW 12+10

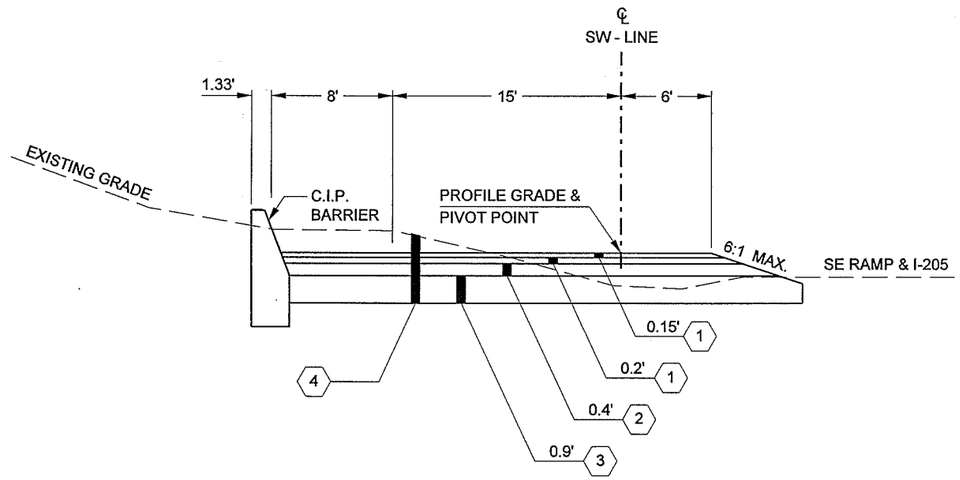

ROADWAY SECTION F

SW 12+10 TO SW 21+30

1. HMA CL. 3/4 IN. PG 64-22
2. HMA CL. 1/2 IN. PG 64-22
3. CRUSHED SURFACING BASE COURSE
4. ROADWAY EXCAVATION
5. EMBANKMENT COMPACTION

NOTES:

ALL DEPTHS SHOWN ARE FINAL COMPACTED DEPTHS. SEE STANDARD SPECIFICATIONS FOR MAXIMUM LIFT DEPTHS.

SEE PAVING PLAN FOR VARIABLE WIDTHS.

CUT AND FILL SECTIONS AS SHOWN ARE TYPICAL TO BOTH SIDES.

NST = NOT STEEPER THAN

FILE NAME	x:\10592-wsdot\26692 salmon creek interchange\13-cadd\13.01-engdwgs\Plans\Typicals\L2135-PS-RS.dgn						
TIME	1:27:38 PM				REGION NO.	STATE	FED.AID PROJ.NO.
DATE	8/30/2005				10	WASH	
PLOTTED BY	lmerhaut						
DESIGNED BY	B. LEBLANC				JOB NUMBER		
ENTERED BY	P. WAGGONER				L2135		
CHECKED BY	CHECKED				CONTRACT NO.		LOCATION NO.
PROJ. ENGR.	PROJ. ENG.						
REGIONAL ADM.	REGIONAL ADM	REVISION	DATE	BY			

DATE
P.E. STAMP BOX

BRENDAN E. LEBLANC
STATE OF WASHINGTON
PROFESSIONAL ENGINEER
EXPIRES APR. 29, 2006
DATE
P.E. STAMP BOX

Washington State
Department of Transportation

SALMON CREEK
134th INTERCHANGE
CLARK COUNTY

ROADWAY SECTIONS

PLOT3
3

SHEET 3 OF 13 SHEETS

PRELIMINARY PLAN SET

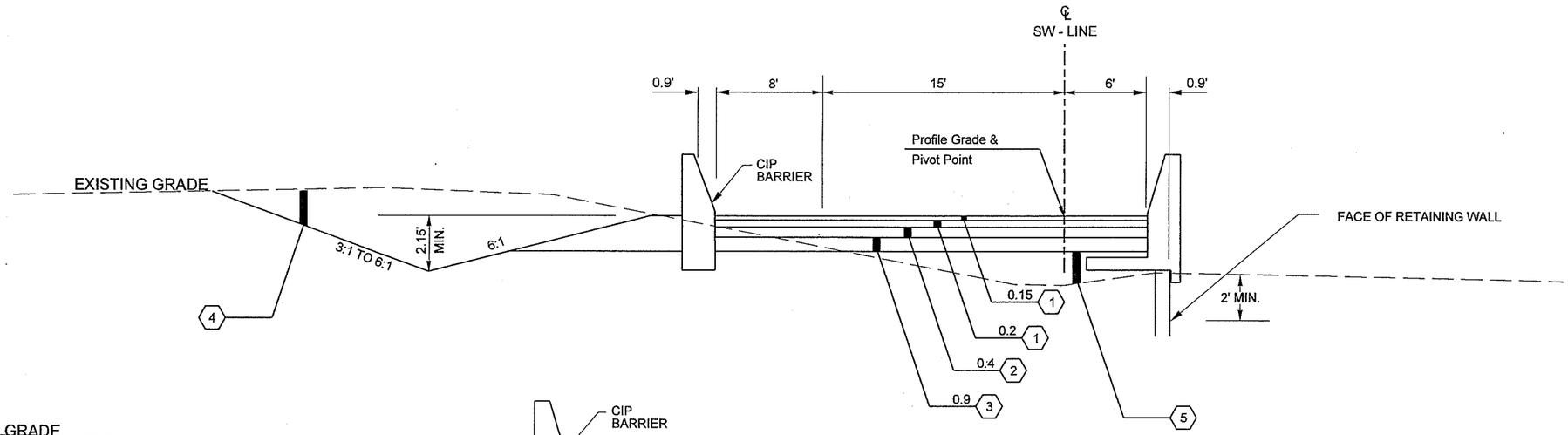

ROADWAY SECTION G

SW 21+30 TO SW 22+28

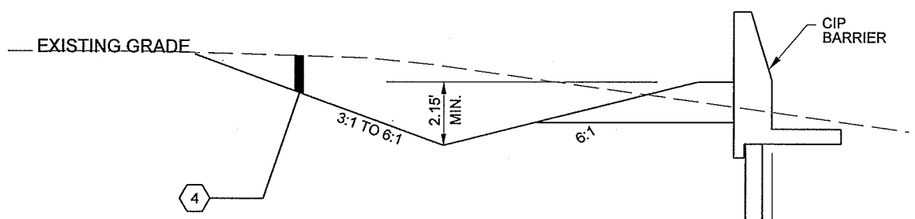

SW 22+28 LT TO SW 24+00 LT

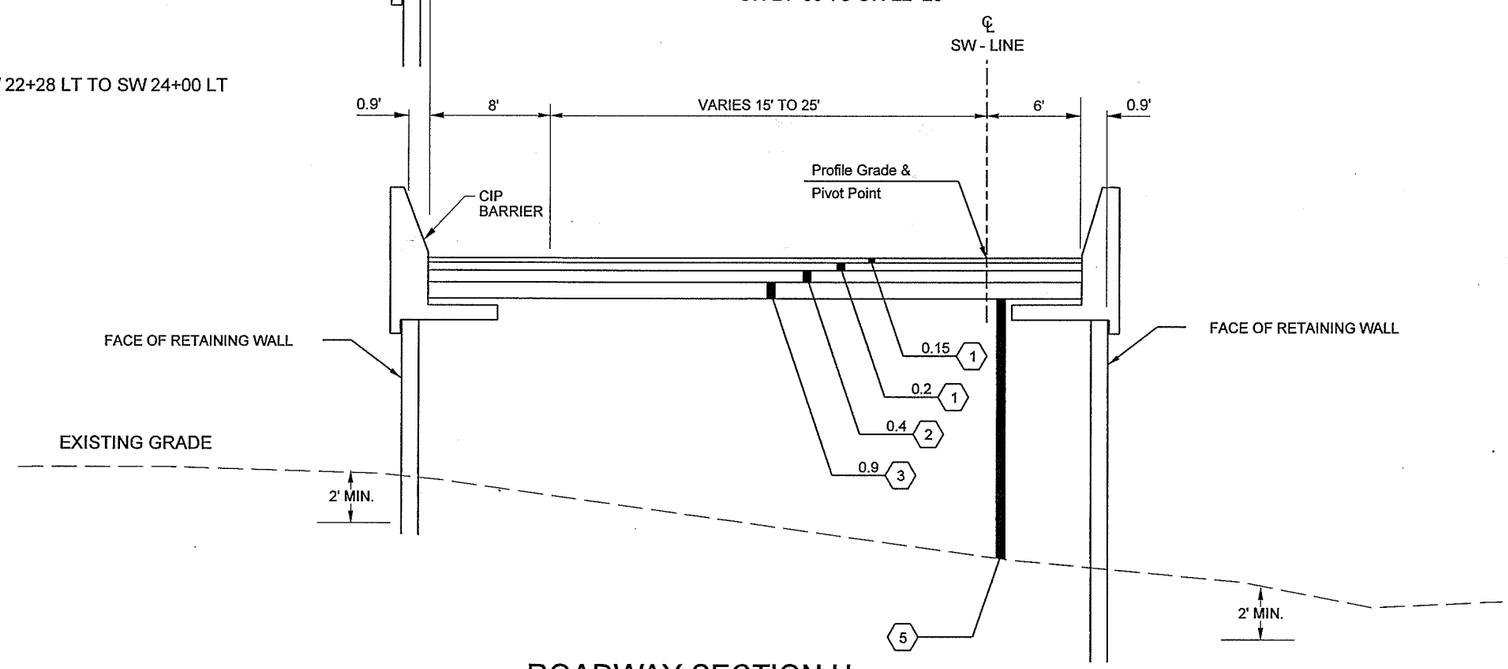

ROADWAY SECTION H

SW 22+28 TO SW 28+83

1. HMA CL. 3/4 IN. PG 64-22
2. HMA CL. 1/2 IN. PG 64-22
3. CRUSHED SURFACING BASE COURSE
4. ROADWAY EXCAVATION
5. EMBANKMENT COMPACTION

NOTES:

ALL DEPTHS SHOWN ARE FINAL COMPACTED DEPTHS. SEE STANDARD SPECIFICATIONS FOR MAXIMUM LIFT DEPTHS.

SEE PAVING PLAN FOR VARIABLE WIDTHS.

CUT AND FILL SECTIONS AS SHOWN ARE TYPICAL TO BOTH SIDES.

NST = NOT STEEPER THAN

FILE NAME	x:\10592-wsdot\26692 salmon creek interchange\13-cadd\13.01-engdwgs\Plans\Typicals\L2135-PS-RS.dgn				REGION NO.	STATE	FED.AID PROJ.NO.
TIME	1:27:39 PM				10	WASH	
DATE	8/30/2005				JOB NUMBER		
PLOTTED BY	lmerhaut				L2135		
DESIGNED BY	B. LEBLANC				CONTRACT NO.		LOCATION NO.
ENTERED BY	P. WAGGONER						
CHECKED BY	CHECKED						
PROJ. ENGR.	PROJ. ENG.						
REGIONAL ADM.	REGIONAL ADM	REVISION	DATE	BY			

P.E. STAMP BOX DATE

BRANDAN E. LEBLANC, STATE OF WASHINGTON, REGISTERED PROFESSIONAL ENGINEER, EXPIRES APR. 29, 2006

P.E. STAMP BOX DATE

Washington State Department of Transportation

SALMON CREEK
134th INTERCHANGE
CLARK COUNTY

ROADWAY SECTIONS

PLOT4

4

SHEET 4 OF 13 SHEETS

PRELIMINARY PLAN SET

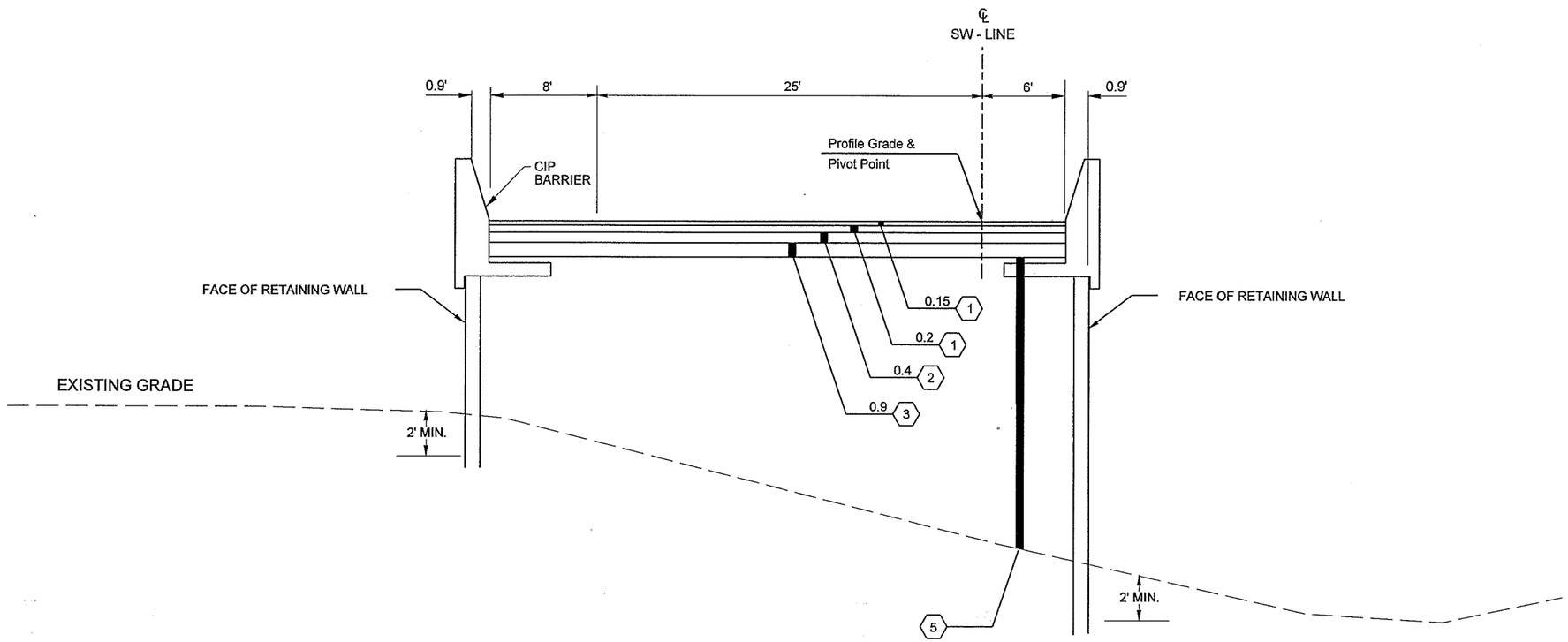

ROADWAY SECTION J

SW 28+83 TO SW 30+54
SW 30+54 TO SW 36+00 (SEE BRIDGE PLANS)
SW 36+00 TO SW 37+00

1. HMA CL. 3/4 IN. PG 64-22
2. HMA CL. 1/2 IN. PG 64-22
3. CRUSHED SURFACING BASE COURSE
4. ROADWAY EXCAVATION
5. EMBANKMENT COMPACTION

NOTES:

ALL DEPTHS SHOWN ARE FINAL COMPACTED DEPTHS. SEE STANDARD SPECIFICATIONS FOR MAXIMUM LIFT DEPTHS.

SEE PAVING PLAN FOR VARIABLE WIDTHS.

CUT AND FILL SECTIONS AS SHOWN ARE TYPICAL TO BOTH SIDES.

NST = NOT STEEPER THAN

FILE NAME	x:\10592-wsdot\26692 salmon creek interchange\13-cadd\13.01-engdwgs\Plans\Typicals\L2135-PS-RS.dgn				REGION NO.	STATE	FED.AID PROJ.NO.
TIME	1:27:40 PM				10	WASH	
DATE	8/30/2005						
PLOTTED BY	Imerhout				JOB NUMBER		
DESIGNED BY	B. LEBLANC				L2135		
ENTERED BY	P. WAGGONER						
CHECKED BY	CHECKED				CONTRACT NO.		LOCATION NO.
PROJ. ENGR.	PROJ. ENG.						
REGIONAL ADM.	REGIONAL ADM	REVISION	DATE	BY			

DATE
P.E. STAMP BOX

BRENDAN E. LeBLANC
STATE OF WASHINGTON
REGISTERED
PROFESSIONAL ENGINEER
EXPIRES APR. 29, 2006
DATE
P.E. STAMP BOX

Washington State
Department of Transportation

SALMON CREEK
134th INTERCHANGE
CLARK COUNTY

ROADWAY SECTIONS

PLOT5
5

SHEET 5 OF 13 SHEETS

PRELIMINARY PLAN SET

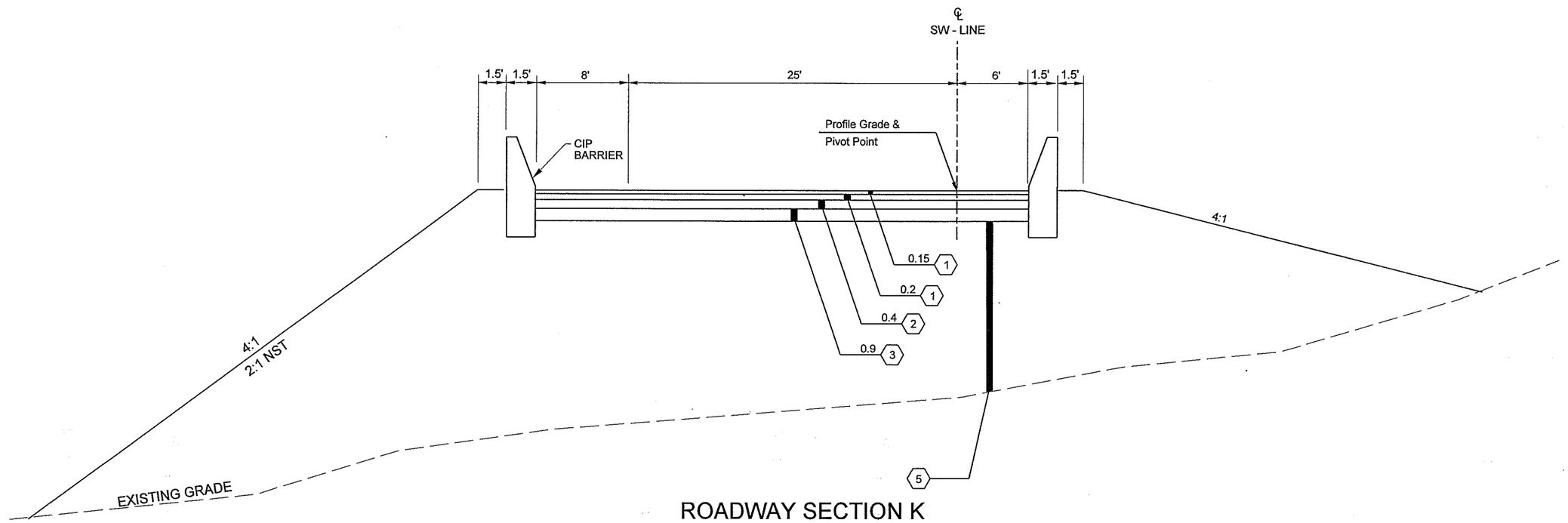

ROADWAY SECTION K

SW 37+00 TO SW 38+00

1. HMA CL. 3/4 IN. PG 64-22
2. HMA CL. 1/2 IN. PG 64-22
3. CRUSHED SURFACING BASE COURSE
4. ROADWAY EXCAVATION
5. EMBANKMENT COMPACTION

NOTES:

ALL DEPTHS SHOWN ARE FINAL COMPACTED DEPTHS. SEE STANDARD SPECIFICATIONS FOR MAXIMUM LIFT DEPTHS.

SEE PAVING PLAN FOR VARIABLE WIDTHS.

CUT AND FILL SECTIONS AS SHOWN ARE TYPICAL TO BOTH SIDES.

NST = NOT STEEPER THAN

FILE NAME	x:\10592-wsdot\26692 salmon creek interchange\13-cadd\13.01-engdwgs\Plans\Typicals\L2135-PS-RS.dgn				REGION NO.	STATE	FED.AID PROJ.NO.
TIME	1:27:42 PM				10	WASH	
DATE	8/30/2005						
PLOTTED BY	lmerhaut				JOB NUMBER		
DESIGNED BY	B. LEBLANC				L2135		
ENTERED BY	P. WAGGONER				CONTRACT NO.		LOCATION NO.
CHECKED BY	CHECKED						
PROJ. ENGR.	PROJ. ENG.						
REGIONAL ADM.	REGIONAL ADM	REVISION	DATE	BY			

DATE
P.E. STAMP BOX

BRENDAN E. LEBLANC
STATE OF WASHINGTON
REGISTERED
PROFESSIONAL ENGINEER
EXPIRES APR. 29, 2006
DATE
P.E. STAMP BOX

Washington State
Department of Transportation

SALMON CREEK
134th INTERCHANGE
CLARK COUNTY

ROADWAY SECTIONS

PLOT6
6

SHEET 6 OF 13 SHEETS

PRELIMINARY PLAN SET

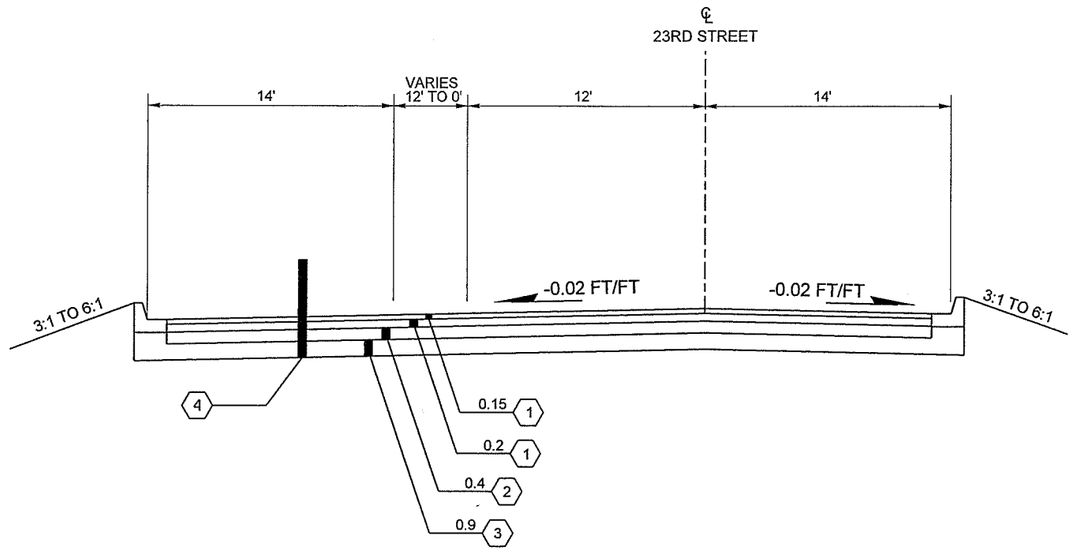

ROADWAY SECTION L

23RD TO 23RD

1. HMA CL. 3/4 IN. PG 64-22
2. HMA CL. 1/2 IN. PG 64-22
3. CRUSHED SURFACING BASE COURSE
4. ROADWAY EXCAVATION
5. EMBANKMENT COMPACTION

NOTES:

ALL DEPTHS SHOWN ARE FINAL COMPACTED DEPTHS. SEE STANDARD SPECIFICATIONS FOR MAXIMUM LIFT DEPTHS.

SEE PAVING PLAN FOR VARIABLE WIDTHS.

CUT AND FILL SECTIONS AS SHOWN ARE TYPICAL TO BOTH SIDES.

NST = NOT STEEPER THAN

FILE NAME	x:\10592-wsdot\26692 salmon creek interchange\13-cadd\13.01-engdwgs\Plans\Typicals\L2135-PS-RS.dgn				REGION NO.	STATE	FED.AID PROJ.NO.
TIME	1:27:41 PM				10	WASH	
DATE	8/30/2005				JOB NUMBER		
PLOTTED BY	lmerhaut				L2135		
DESIGNED BY	B. LEBLANC				CONTRACT NO.		LOCATION NO.
ENTERED BY	P. WAGGONER						
CHECKED BY	CHECKED						
PROJ. ENGR.	PROJ. ENG.						
REGIONAL ADM.	REGIONAL ADM	REVISION	DATE	BY			

DATE
P.E. STAMP BOX

BRENDAN E. LEBLANC
STATE OF WASHINGTON
40083
REGISTERED
PROFESSIONAL ENGINEER
EXPIRES APR. 29, 2006

DATE
P.E. STAMP BOX

Washington State Department of Transportation

SALMON CREEK
134th INTERCHANGE
CLARK COUNTY

ROADWAY SECTIONS

PLOT7
7

SHEET 7 OF 13 SHEETS

PRELIMINARY PLAN SET

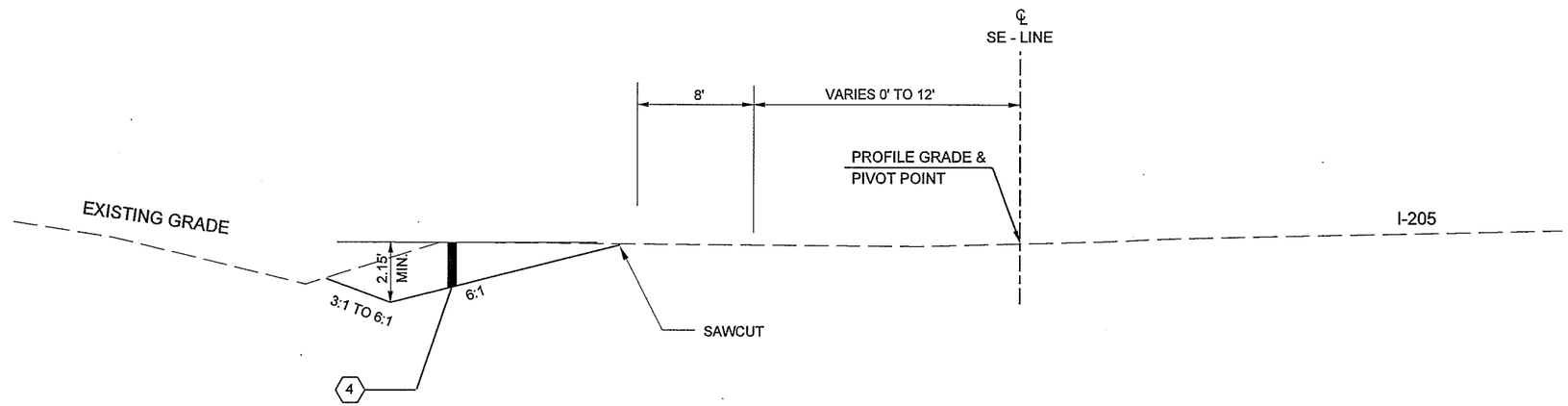

ROADWAY SECTION L

SE 110+50 TO SE 116+50

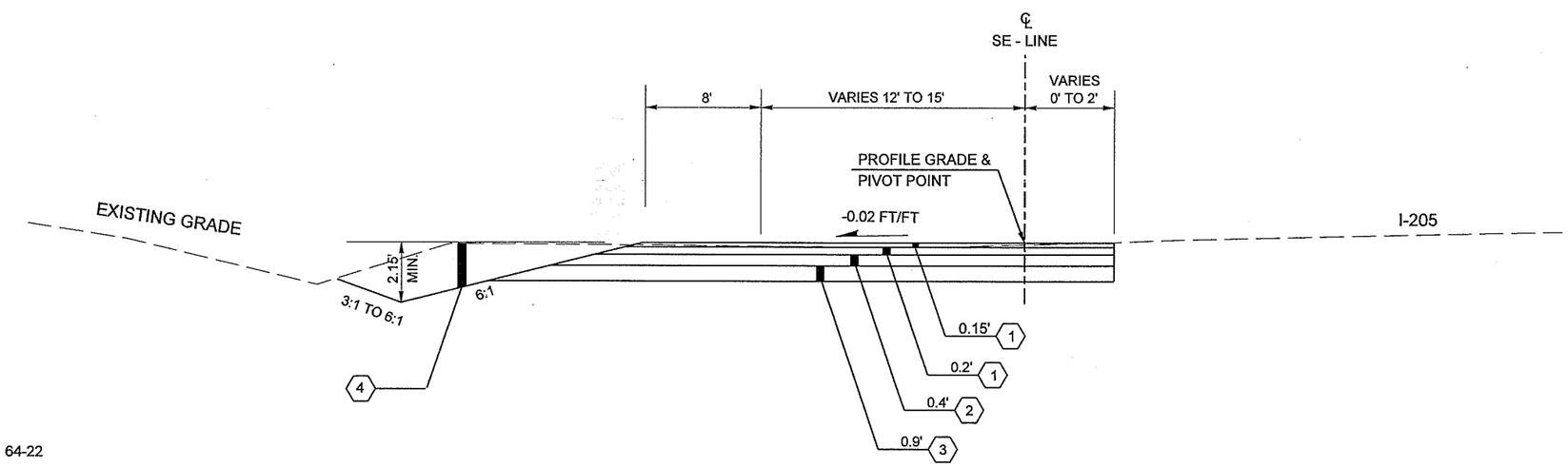

ROADWAY SECTION M

SE 116+50 TO SE 118+00

1. HMA CL. 3/4 IN. PG 64-22
2. HMA CL. 1/2 IN. PG 64-22
3. CRUSHED SURFACING BASE COURSE
4. ROADWAY EXCAVATION
5. EMBANKMENT COMPACTION

NOTES:

ALL DEPTHS SHOWN ARE FINAL COMPACTED DEPTHS. SEE STANDARD SPECIFICATIONS FOR MAXIMUM LIFT DEPTHS.

SEE PAVING PLAN FOR VARIABLE WIDTHS.

CUT AND FILL SECTIONS AS SHOWN ARE TYPICAL TO BOTH SIDES.

NST = NOT STEEPER THAN

FILE NAME	x:\10592-wsdot\26692 salmon creek interchange\13-cadd\13.01-engdwgs\plans\typicals\L2135-PS-RS2.dgn						
TIME	1:27:49 PM				REGION NO. 10	STATE WASH	FED.AID PROJ.NO.
DATE	8/30/2005						
PLOTTED BY	lmerhaut				JOB NUMBER L2135		
DESIGNED BY	B. LEBLANC						
ENTERED BY	P. WAGGONER				CONTRACT NO.	LOCATION NO.	
CHECKED BY	CHECKED						
PROJ. ENGR.	PROJ. ENG.						
REGIONAL ADM.	REGIONAL ADM	REVISION	DATE	BY			

P.E. STAMP BOX DATE

BRENDAN E. LEBLANC STATE OF WASHINGTON 38382 REGISTERED PROFESSIONAL ENGINEER
EXPIRES APR. 29, 2006 DATE
P.E. STAMP BOX

Washington State Department of Transportation

SALMON CREEK
134th INTERCHANGE
CLARK COUNTY

ROADWAY SECTIONS

PLOT1 8

SHEET 8 OF 13 SHEETS

PRELIMINARY PLAN SET

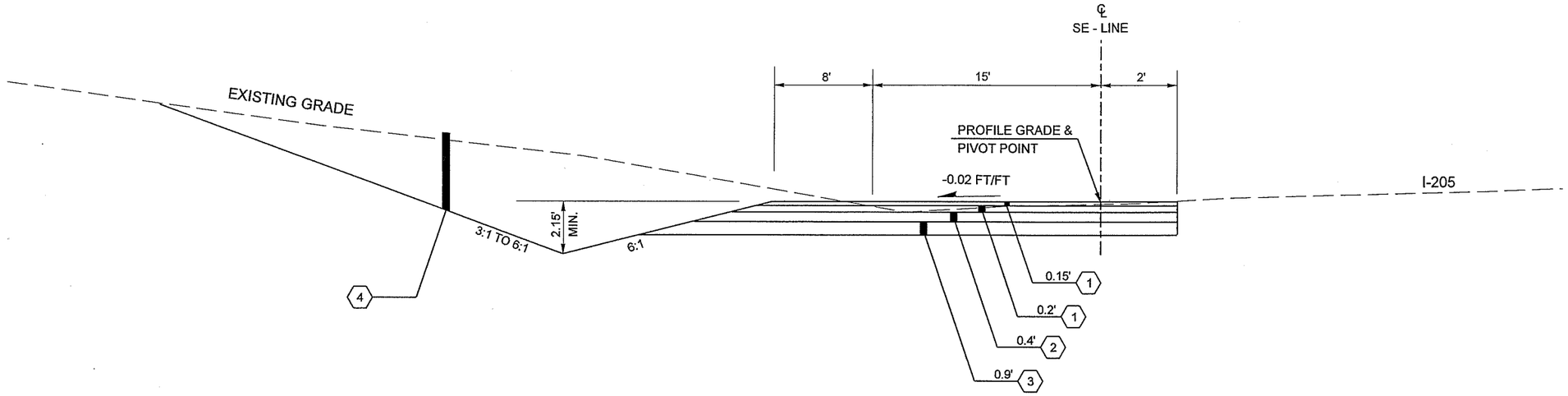

ROADWAY SECTION N

SE 118+00 TO SE 121+00

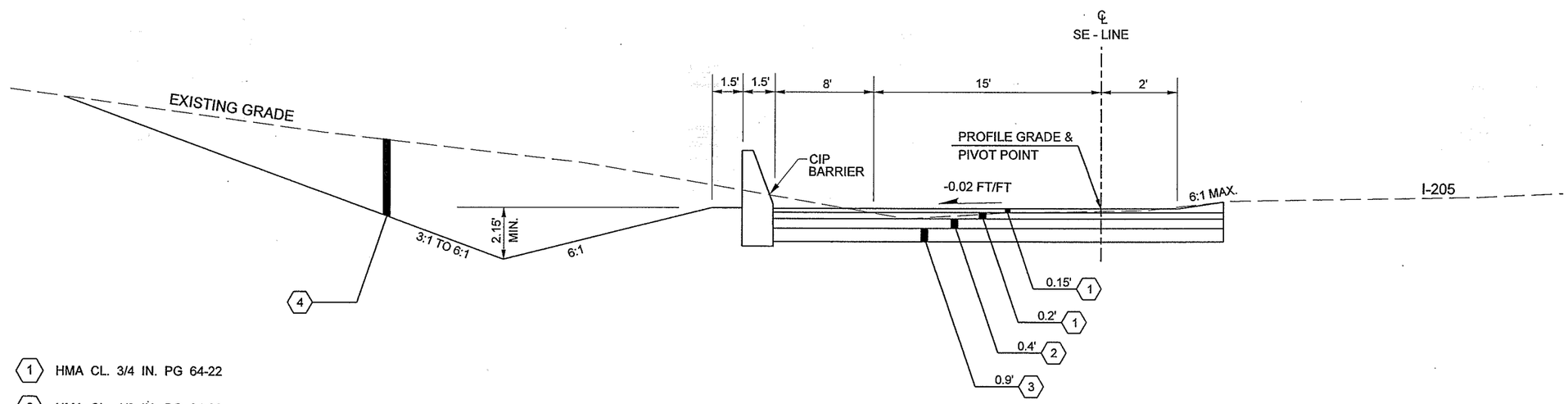

1. HMA CL. 3/4 IN. PG 64-22
2. HMA CL. 1/2 IN. PG 64-22
3. CRUSHED SURFACING BASE COURSE
4. ROADWAY EXCAVATION
5. EMBANKMENT COMPACTION

ROADWAY SECTION P

SE 121+00 TO SE 125+00

NOTES:

ALL DEPTHS SHOWN ARE FINAL COMPACTED DEPTHS. SEE STANDARD SPECIFICATIONS FOR MAXIMUM LIFT DEPTHS.

SEE PAVING PLAN FOR VARIABLE WIDTHS.

CUT AND FILL SECTIONS AS SHOWN ARE TYPICAL TO BOTH SIDES.

NST = NOT STEEPER THAN

FILE NAME	x:\10592-wsdot\26692 salmon creek interchange\13-cadd\13.01-engdwgs\plans\typicals\L2135-PS-RS2.dgn
TIME	1:27:45 PM
DATE	8/30/2005
PLOTTED BY	lmerhout
DESIGNED BY	B. LEBLANC
ENTERED BY	P. WAGGONER
CHECKED BY	CHECKED
PROJ. ENGR.	PROJ. ENG.
REGIONAL ADM.	REGIONAL ADM

REVISION | DATE | BY

REGION NO. 10 | STATE WASH | FED.AID PROJ.NO.

JOB NUMBER L2135

CONTRACT NO. | LOCATION NO.

P.E. STAMP BOX DATE

BRENDAN P. LEBLANC STATE OF WASHINGTON REGISTERED PROFESSIONAL ENGINEER EXPIRES APR. 29, 2006 DATE P.E. STAMP BOX

Washington State Department of Transportation

SALMON CREEK
134th INTERCHANGE
CLARK COUNTY

ROADWAY SECTIONS

PLOT2 9

SHEET 9 OF 13 SHEETS

PRELIMINARY PLAN SET

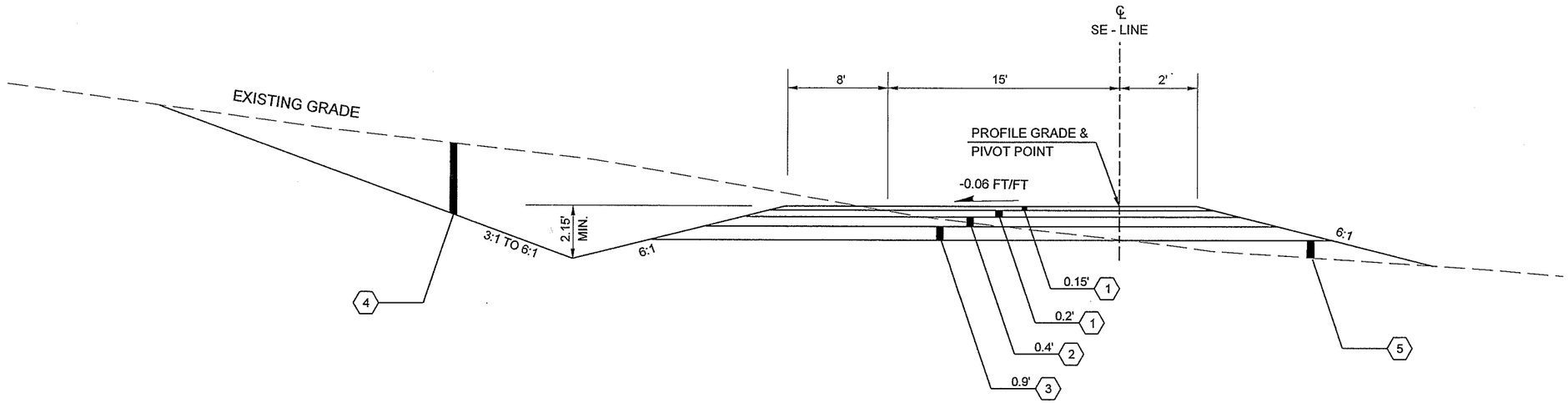

ROADWAY SECTION Q

SE 125+00 TO SE 133+25

1. HMA CL. 3/4 IN. PG 64-22
2. HMA CL. 1/2 IN. PG 64-22
3. CRUSHED SURFACING BASE COURSE
4. ROADWAY EXCAVATION
5. EMBANKMENT COMPACTION

NOTES:

ALL DEPTHS SHOWN ARE FINAL COMPACTED DEPTHS. SEE STANDARD SPECIFICATIONS FOR MAXIMUM LIFT DEPTHS.

SEE PAVING PLAN FOR VARIABLE WIDTHS.

CUT AND FILL SECTIONS AS SHOWN ARE TYPICAL TO BOTH SIDES.

NST = NOT STEEPER THAN

FILE NAME	n:\10592-wsdot\26692 salmon creek interchange\13-cadd\13.01-engdwgs\Plans\Typicals\L2135-PS-RS2.dgn						
TIME	2:42:08 PM				REGION NO. / STATE	FED.AID PROJ.NO.	
DATE	8/30/2005				10 WASH		
PLOTTED BY	pwaggone				JOB NUMBER		
DESIGNED BY	B. LEBLANC				L2135		
ENTERED BY	P. WAGGONER				CONTRACT NO.	LOCATION NO.	
CHECKED BY	CHECKED						
PROJ. ENGR.	PROJ. ENG.						
REGIONAL ADM.	REGIONAL ADM	REVISION	DATE	BY			

P.E. STAMP BOX DATE

BRENDAN P. LEBLANC STATE OF WASHINGTON 40613 REGISTERED PROFESSIONAL ENGINEER
EXPIRES APR. 29, 2006
P.E. STAMP BOX DATE

Washington State Department of Transportation

SALMON CREEK
134th INTERCHANGE
CLARK COUNTY

ROADWAY SECTIONS

PLOT4

10

SHEET 10 OF 13 SHEETS

PRELIMINARY PLAN SET

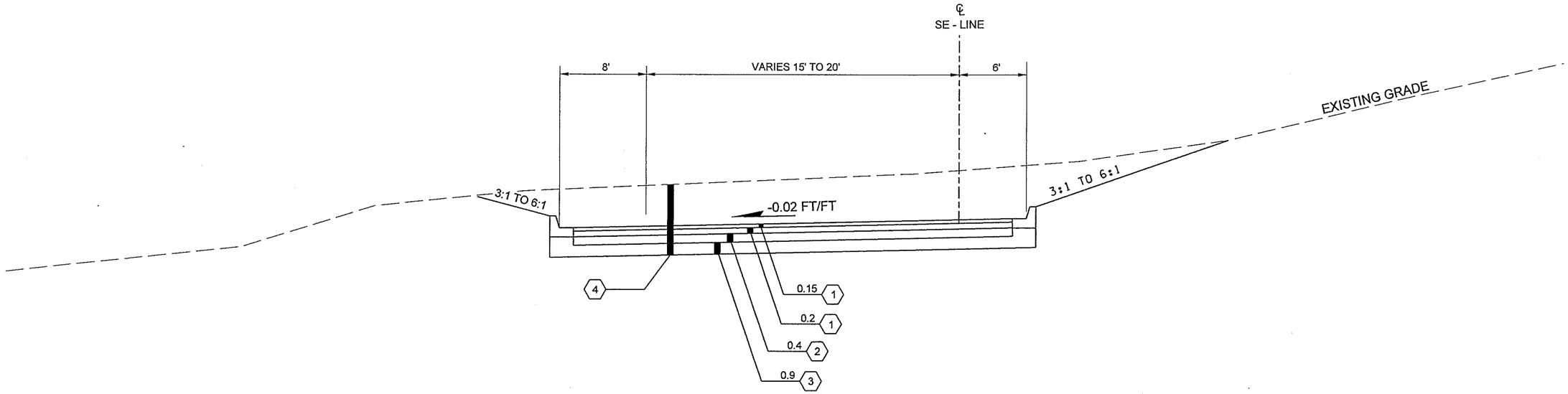

ROADWAY SECTION R

SE 133+25 TO SE 133+75

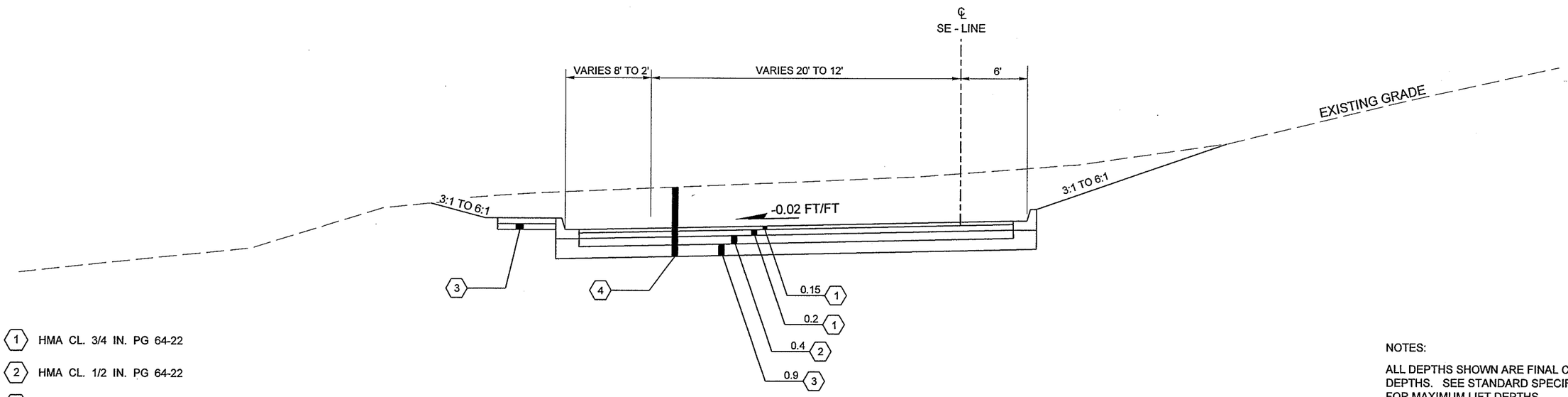

ROADWAY SECTION S

SE 133+75 TO SE 134+72

1. HMA CL. 3/4 IN. PG 64-22
2. HMA CL. 1/2 IN. PG 64-22
3. CRUSHED SURFACING BASE COURSE
4. ROADWAY EXCAVATION
5. EMBANKMENT COMPACTION

NOTES:

ALL DEPTHS SHOWN ARE FINAL COMPACTED DEPTHS. SEE STANDARD SPECIFICATIONS FOR MAXIMUM LIFT DEPTHS.

SEE PAVING PLAN FOR VARIABLE WIDTHS.

CUT AND FILL SECTIONS AS SHOWN ARE TYPICAL TO BOTH SIDES.

NST = NOT STEEPER THAN

FILE NAME	n:\10592-wsdot\26692 salmon creek interchange\13-cadd\13.01-engdwgs\Plans\Typicals\L2135-PS-RS2.dgn						
TIME	2:41:44 PM				REGION NO. / STATE	FED.AID PROJ.NO.	
DATE	8/30/2005				10 WASH		
PLOTTED BY	pwaggone				JOB NUMBER		
DESIGNED BY	B. LEBLANC				L2135		
ENTERED BY	P. WAGGONER				CONTRACT NO.	LOCATION NO.	
CHECKED BY	CHECKED						
PROJ. ENGR.	PROJ. ENG.						
REGIONAL ADM.	REGIONAL ADM	REVISION	DATE	BY			

DATE
P.E. STAMP BOX

BRENDAN E. LEBLANC
STATE OF WASHINGTON
PROFESSIONAL ENGINEER
EXPIRES APR. 29, 2006
DATE
P.E. STAMP BOX

Washington State Department of Transportation

SALMON CREEK
134th INTERCHANGE
CLARK COUNTY

ROADWAY SECTIONS

PLOT3
11

SHEET 11 OF 13 SHEETS

PRELIMINARY PLAN SET

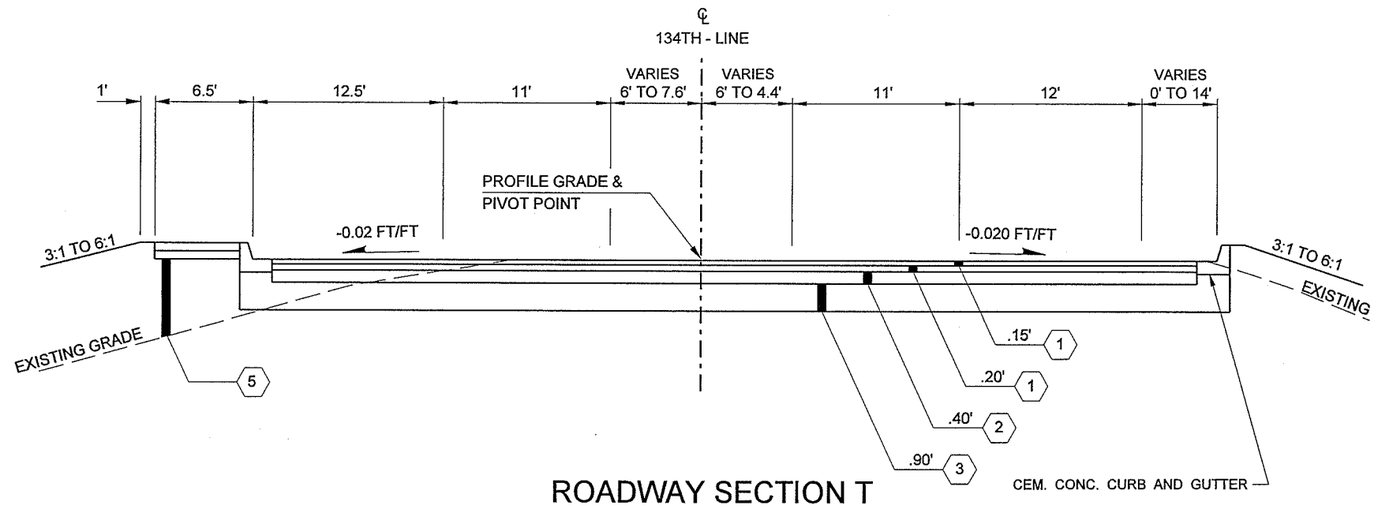

ROADWAY SECTION T

134TH 22+70 TO 134TH 23+65

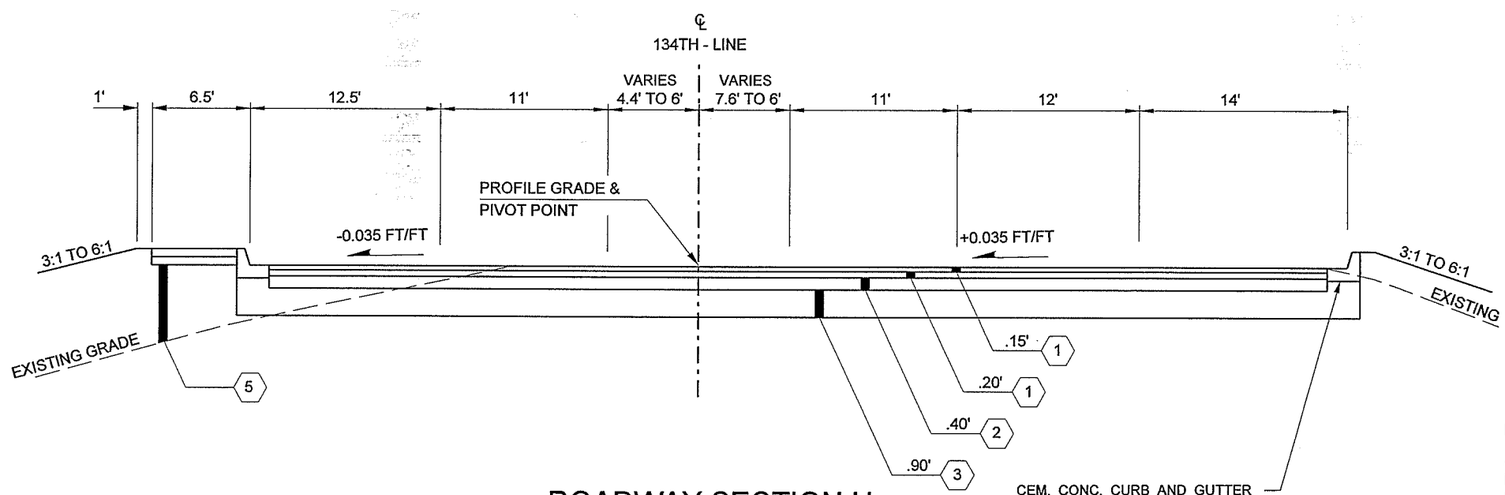

ROADWAY SECTION U

134TH 23+65 TO 134TH 24+90

1. HMA CL. 3/4 IN. PG 64-22
2. HMA CL. 1/2 IN. PG 64-22
3. CRUSHED SURFACING BASE COURSE
4. ROADWAY EXCAVATION
5. EMBANKMENT COMPACTION

NOTES:

ALL DEPTHS SHOWN ARE FINAL COMPACTED DEPTHS. SEE STANDARD SPECIFICATIONS FOR MAXIMUM LIFT DEPTHS.

SEE PAVING PLAN FOR VARIABLE WIDTHS.

CUT AND FILL SECTIONS AS SHOWN ARE TYPICAL TO BOTH SIDES.

NST = NOT STEEPER THAN

FILE NAME	x:\10592-wsdot\26692 salmon creek interchange\13-cadd\13.01-engdwgs\plans\typicals\L2135-PS-RS2.dgn				REGION NO.	STATE	FED.AID PROJ.NO.
TIME	1:27:47 PM				10	WASH	
DATE	8/30/2005				JOB NUMBER		
PLOTTED BY	lmerhaut				L2135		
DESIGNED BY	B. LEBLANC				CONTRACT NO.		LOCATION NO.
ENTERED BY	P. WAGGONER						
CHECKED BY	CHECKED						
PROJ. ENGR.	PROJ. ENG.						
REGIONAL ADM.	REGIONAL ADM	REVISION	DATE	BY			

DATE
P.E. STAMP BOX

BRENDAN E. LEBLANC
STATE OF WASHINGTON
20043
REGISTERED PROFESSIONAL ENGINEER
EXPIRES APR. 29, 2006
DATE
P.E. STAMP BOX

Washington State Department of Transportation

SALMON CREEK
134th INTERCHANGE
CLARK COUNTY

ROADWAY SECTIONS

PLOT5
12

SHEET 12 OF 13 SHEETS

PRELIMINARY PLAN SET

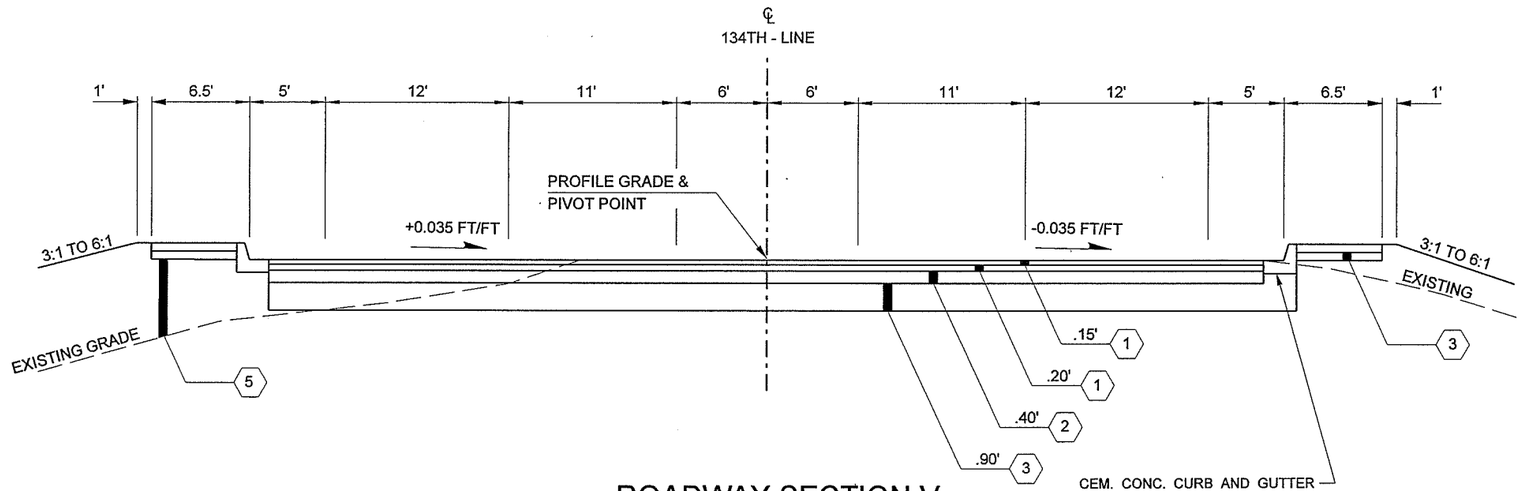

ROADWAY SECTION V

134TH 24+90 TO 134TH 28+00

1. HMA CL. 3/4 IN. PG 64-22
2. HMA CL. 1/2 IN. PG 64-22
3. CRUSHED SURFACING BASE COURSE
4. ROADWAY EXCAVATION
5. EMBANKMENT COMPACTION

NOTES:

ALL DEPTHS SHOWN ARE FINAL COMPACTED DEPTHS. SEE STANDARD SPECIFICATIONS FOR MAXIMUM LIFT DEPTHS.

SEE PAVING PLAN FOR VARIABLE WIDTHS.

CUT AND FILL SECTIONS AS SHOWN ARE TYPICAL TO BOTH SIDES.

NST = NOT STEEPER THAN

FILE NAME	x:\10592-wsdot\26692 salmon creek interchange\13-cadd\13.01-engdwgs\plans\typicals\L2135-PS-RS2.dgn						
TIME	1:27:48 PM				REGION NO.	STATE	FED.AID PROJ.NO.
DATE	8/30/2005				10	WASH	
PLOTTED BY	lmerhaut				JOB NUMBER		
DESIGNED BY	B. LEBLANC				L2135		
ENTERED BY	P. WAGGONER				CONTRACT NO.		LOCATION NO.
CHECKED BY	CHECKED						
PROJ. ENGR.	PROJ. ENG.						
REGIONAL ADM.	REGIONAL ADM	REVISION	DATE	BY			

DATE
P.E. STAMP BOX

BRENDAN E. LeBLANC
STATE OF WASHINGTON
40483
REGISTERED
PROFESSIONAL ENGINEER
EXPIRES APR. 29, 2006
DATE
P.E. STAMP BOX

Washington State
Department of Transportation

SALMON CREEK
134th INTERCHANGE
CLARK COUNTY

ROADWAY SECTIONS

PLOT6
13

SHEET 13 OF 13 SHEETS

PRELIMINARY PLAN SET

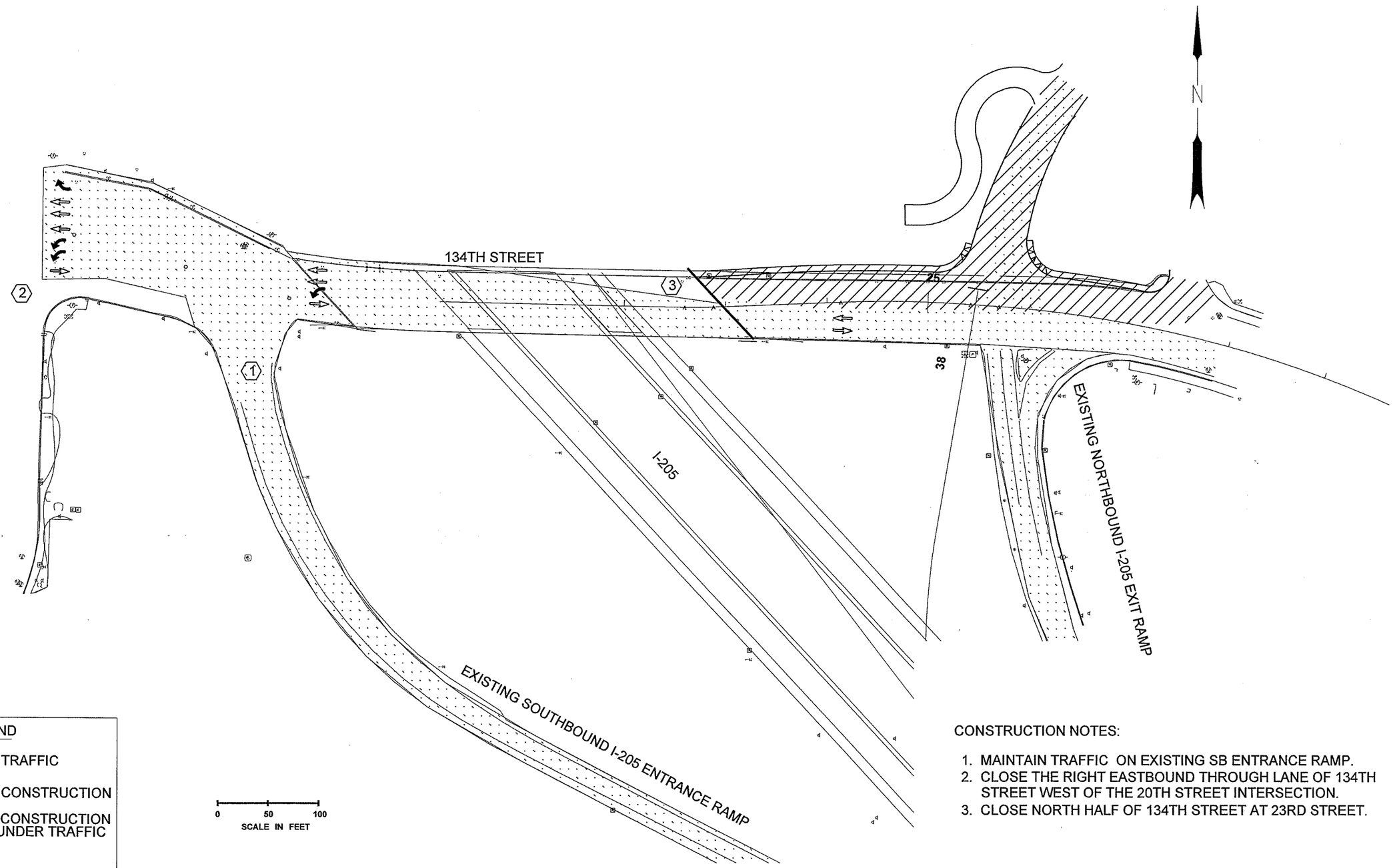

LEGEND

- UNDER TRAFFIC
- UNDER CONSTRUCTION
- UNDER CONSTRUCTION WHILE UNDER TRAFFIC

CONSTRUCTION NOTES:

1. MAINTAIN TRAFFIC ON EXISTING SB ENTRANCE RAMP.
2. CLOSE THE RIGHT EASTBOUND THROUGH LANE OF 134TH STREET WEST OF THE 20TH STREET INTERSECTION.
3. CLOSE NORTH HALF OF 134TH STREET AT 23RD STREET.

FILE NAME	x:\10592-wsdot\26692 salmon creek interchange\13-cadd\13.01-engdwgs\plans\Stage Construction\L2135_PS_SU_01.dgn						
TIME	12:24:58 PM				REGION NO. / STATE	FED.AID PROJ.NO.	
DATE	8/30/2005				10 / WASH	XL2135	
PLOTTED BY	Imerhaut				JOB NUMBER		
DESIGNED BY	B. LEBLANC				L2135		
ENTERED BY	P. WAGGONER				CONTRACT NO.	LOCATION NO.	
CHECKED BY	CHECKED						
PROJ. ENGR.	PORJ. ENG.						
REGIONAL ADM.	REGIONAL ADM	REVISION	DATE	BY			

DATE
P.E. STAMP BOX

BRENDAN E. LeBLANC
STATE OF WASHINGTON
40062
REGISTERED
PROFESSIONAL ENGINEER
EXPIRES APR. 29, 2006

DATE
P.E. STAMP BOX

Washington State Department of Transportation

SALMON CREEK
134th INTERCHANGE
CLARK COUNTY

STAGE CONSTRUCTION
STAGE 1 – PHASE 1

PLOT1
SU1
SHEET 1 OF 6 SHEETS

PRELIMINARY PLAN SET

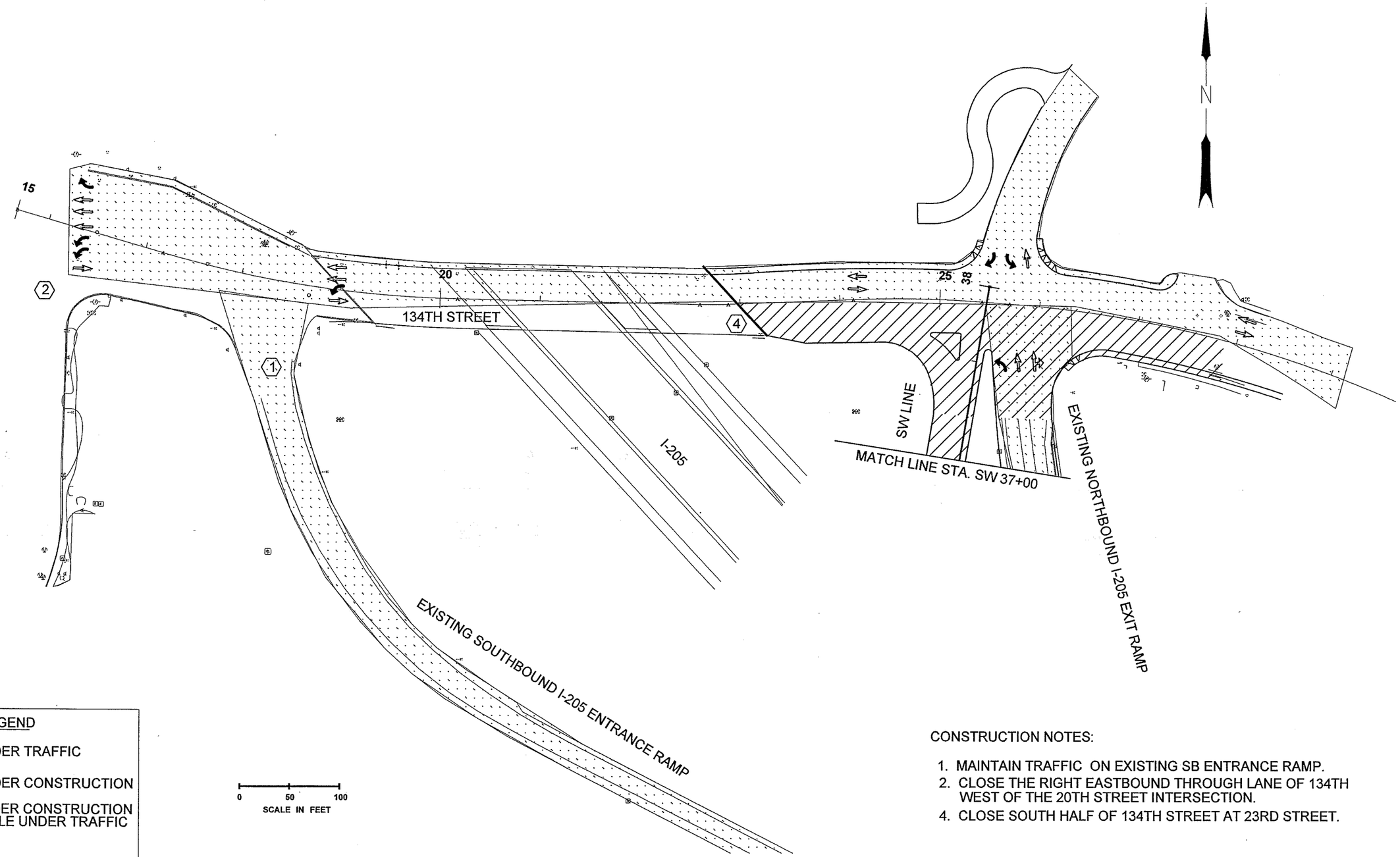

LEGEND

- UNDER TRAFFIC
- UNDER CONSTRUCTION
- UNDER CONSTRUCTION WHILE UNDER TRAFFIC

CONSTRUCTION NOTES:

1. MAINTAIN TRAFFIC ON EXISTING SB ENTRANCE RAMP.
2. CLOSE THE RIGHT EASTBOUND THROUGH LANE OF 134TH WEST OF THE 20TH STREET INTERSECTION.
4. CLOSE SOUTH HALF OF 134TH STREET AT 23RD STREET.

FILE NAME	x:\10592-wsdot\26692 salmon creek interchange\13-cadd\13.01-engdwgs\plans\Stage Construction\L2135_PS_SU_02.dgn				REGION NO.	STATE	FED. AID PROJ. NO.
TIME	12:25:03 PM				10	WASH	XL2135
DATE	8/30/2005				JOB NUMBER		
PLOTTED BY	Imerhaut				L2135		
DESIGNED BY	B. LEBLANC				CONTRACT NO.		LOCATION NO.
ENTERED BY	P. WAGGONER						
CHECKED BY	CHECKED						
PROJ. ENGR.	PORJ. ENG.						
REGIONAL ADM.	REGIONAL ADM	REVISION	DATE	BY			

P.E. STAMP BOX DATE

BRENDAN E. LEBLANC, STATE OF WASHINGTON, 2003 REGISTERED PROFESSIONAL ENGINEER
EXPIRES APR. 29, 2006
P.E. STAMP BOX DATE

Washington State Department of Transportation

SALMON CREEK
134th INTERCHANGE
CLARK COUNTY

STAGE CONSTRUCTION
STAGE 1 – PHASE 2

PLOT1

SU2

SHEET 2 OF 6 SHEETS

PRELIMINARY PLAN SET

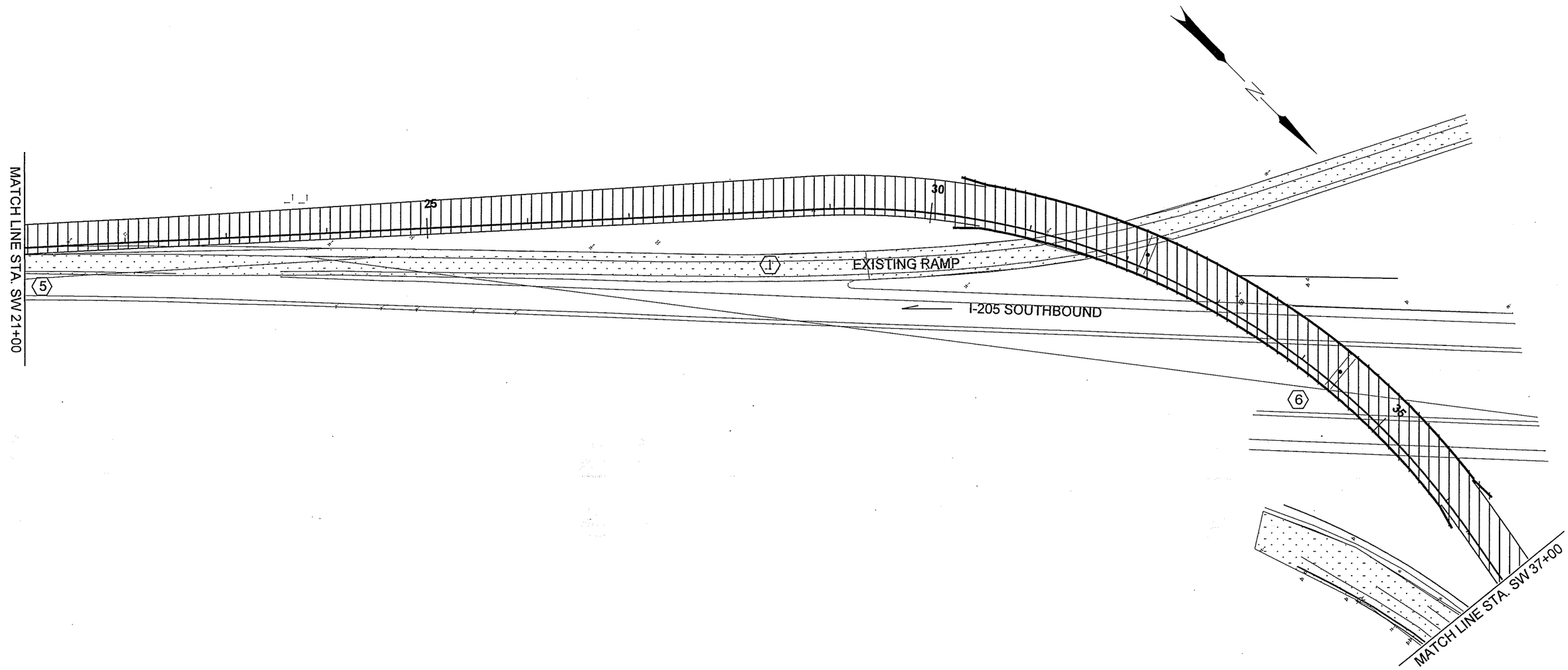

LEGEND

- UNDER TRAFFIC
- UNDER CONSTRUCTION
- UNDER CONSTRUCTION WHILE UNDER TRAFFIC

0 50 100
SCALE IN FEET

CONSTRUCTION NOTES:

1. MAINTAIN TRAFFIC ON EXISTING SB ENTRANCE RAMP.
5. PAVING IN THIS GORE AREA WOULD BE WITHIN THE EXISTING RAMP. TEMPORARY NIGHT CLOSURES OR SHIFTING OF RAMP TRAFFIC TO THE INSIDE SHOULDER WOULD BE NECESSARY.
6. LATE NIGHT ROLLING BLOCKADES OR SHORT TERM DETOURS OF I-205 WOULD BE NECESSARY FOR SETTING GIRDERS.

FILE NAME	x:\10592-wsdot\26692 salmon creek interchange\13-cadd\13.01-engdwgs\plans\Stage Construction\L2135_PS_SU_03.dgn				REGION NO. 10	STATE WASH	FED.AID PROJ.NO. XL2135
TIME	12:25:06 PM						
DATE	8/30/2005						
PLOTTED BY	Imerhaut				JOB NUMBER L2135		
DESIGNED BY	B. LEBLANC						
ENTERED BY	P. WAGGONER						
CHECKED BY	CHECKED				CONTRACT NO.		LOCATION NO.
PROJ. ENGR.	PORJ. ENG.						
REGIONAL ADM.	REGIONAL ADM	REVISION	DATE	BY			

DATE
P.E. STAMP BOX

BRENDAN E. LEBLANC
STATE OF WASHINGTON
40043
REGISTERED PROFESSIONAL ENGINEER
EXPIRES APR. 29, 2006
DATE
P.E. STAMP BOX

Washington State Department of Transportation

SALMON CREEK
134th INTERCHANGE
CLARK COUNTY

STAGE CONSTRUCTION
STAGE 1 – PHASE 2

PLOT1
SU3
SHEET 3 OF 6 SHEETS

PRELIMINARY PLAN SET

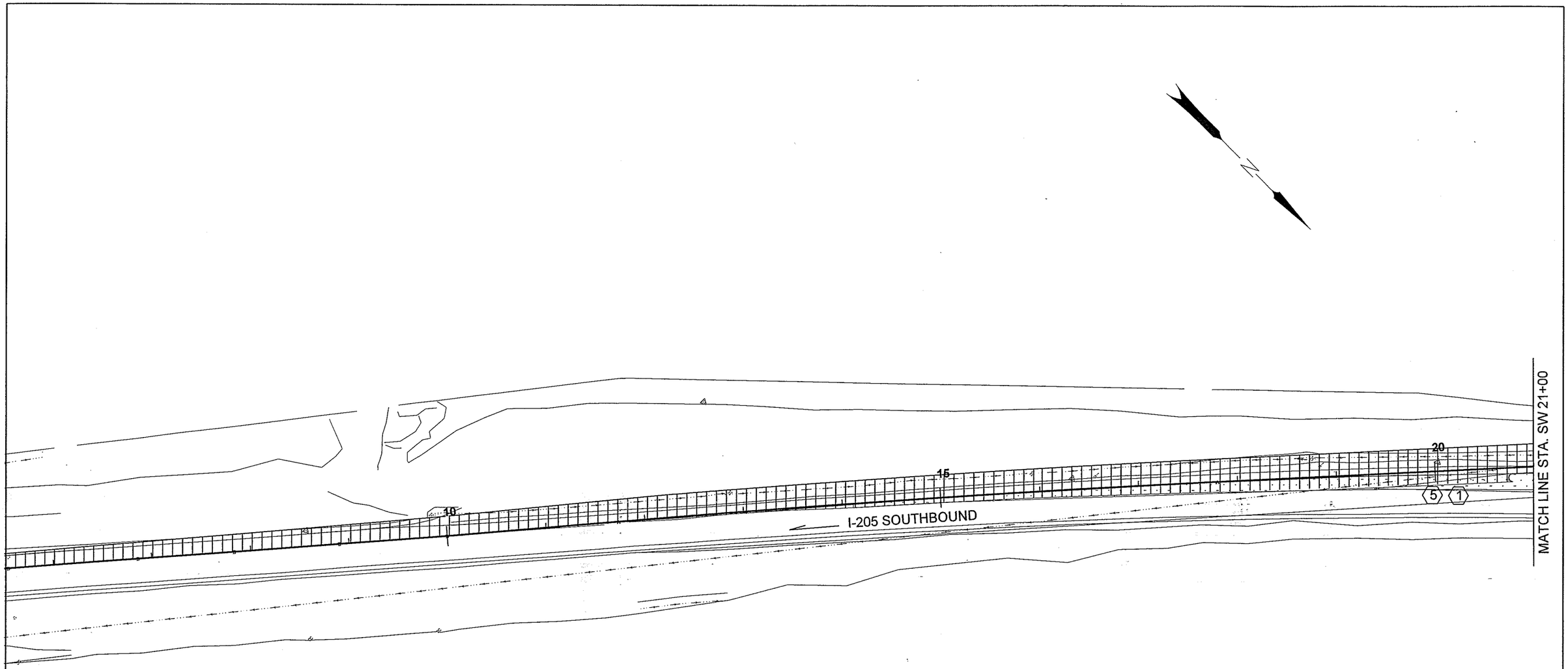

LEGEND

- UNDER TRAFFIC
- UNDER CONSTRUCTION
- UNDER CONSTRUCTION WHILE UNDER TRAFFIC

0 50 100
SCALE IN FEET

CONSTRUCTION NOTES:

1. MAINTAIN TRAFFIC ON EXISTING SB ENTRANCE RAMP.
5. PAVING IN THIS GORE AREA WOULD BE WITHIN THE EXISTING RAMP. TEMPORARY NIGHT CLOSURES OR SHIFTING OF RAMP TRAFFIC TO THE INSIDE SHOULDER WOULD BE NECESSARY.

FILE NAME	x:\10592-wsdot\26692 salmon creek interchange\13-cadd\13.01-engdwgs\plans\Stage Construction\L2135_PS_SU_04.dgn				REGION NO.	STATE	FED.AID PROJ.NO.
TIME	12:25:09 PM				10	WASH	XL2135
DATE	8/30/2005				JOB NUMBER		
PLOTTED BY	Imerhaut				L2135		
DESIGNED BY	B. LEBLANC				CONTRACT NO.		LOCATION NO.
ENTERED BY	P. WAGGONER						
CHECKED BY	CHECKED						
PROJ. ENGR.	PORJ. ENG.						
REGIONAL ADM.	REGIONAL ADM	REVISION	DATE	BY			

P.E. STAMP BOX DATE

BRANDON E. LEBLANC, STATE OF WASHINGTON, 40159, REGISTERED PROFESSIONAL ENGINEER
EXPIRES APR. 29, 2006
P.E. STAMP BOX DATE

Washington State Department of Transportation

SALMON CREEK
134th INTERCHANGE
CLARK COUNTY

STAGE CONSTRUCTION
STAGE 1 – PHASE 2

PLOT1

SU4

SHEET 4 OF 6 SHEETS

PRELIMINARY PLAN SET

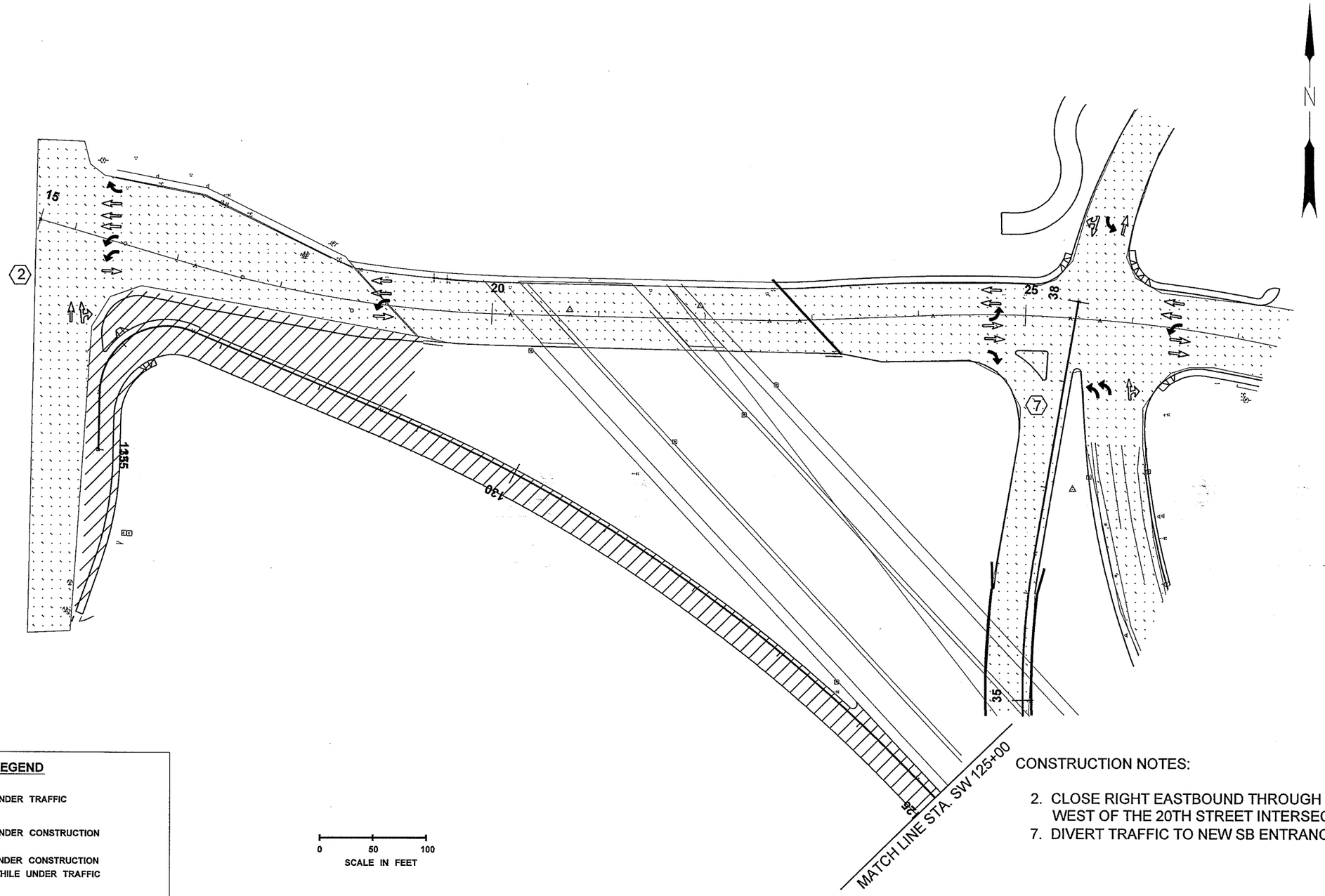

CONSTRUCTION NOTES:

2. CLOSE RIGHT EASTBOUND THROUGH LANE OF 134TH WEST OF THE 20TH STREET INTERSECTION.
7. DIVERT TRAFFIC TO NEW SB ENTRANCE RAMP.

LEGEND

- UNDER TRAFFIC
- UNDER CONSTRUCTION
- UNDER CONSTRUCTION WHILE UNDER TRAFFIC

0 50 100
SCALE IN FEET

FILE NAME	x:\10592-wsdot\26692 salmon creek interchange\13-cadd\13.01-engdwgs\plans\Stage Construction\L2135_PS_SU_05.dgn					
TIME	12:25:16 PM					
DATE	8/30/2005					
PLOTTED BY	lmerhaut					
DESIGNED BY	B. LEBLANC					
ENTERED BY	P. WAGGONER					
CHECKED BY	CHECKED					
PROJ. ENGR.	PORJ. ENG.					
REGIONAL ADM.	REGIONAL ADM	REVISION	DATE	BY		

REGION NO.	STATE	FED.AID PROJ.NO.
10	WASH	XL2135
JOB NUMBER L2135		
CONTRACT NO.		LOCATION NO.

P.E. STAMP BOX DATE

BRENDAN E. LEBLANC STATE OF WASHINGTON 40188 REGISTERED PROFESSIONAL ENGINEER
EXPIRES APR. 29, 2006
P.E. STAMP BOX DATE

Washington State Department of Transportation

SALMON CREEK
134th INTERCHANGE
CLARK COUNTY

STAGE CONSTRUCTION
STAGE 2

PLOT1
SU5
SHEET 5 OF 6 SHEETS

PRELIMINARY PLAN SET

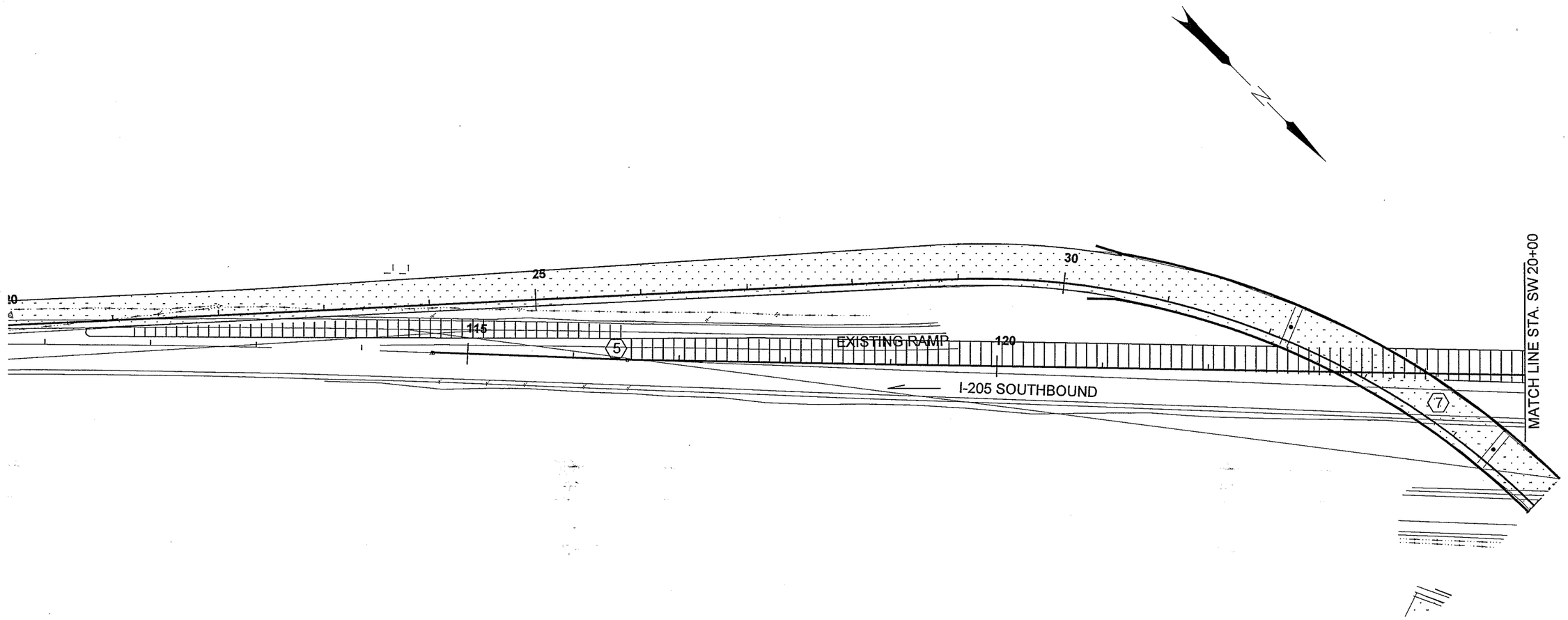

LEGEND

- UNDER TRAFFIC
- UNDER CONSTRUCTION
- UNDER CONSTRUCTION WHILE UNDER TRAFFIC

0 50 100
SCALE IN FEET

CONSTRUCTION NOTES:

5. PAVING IN THIS GORE AREA WOULD BE WITHIN THE EXISTING RAMP. TEMPORARY NIGHT CLOSURES OR SHIFTING OF TRAFFIC TO THE INSIDE SHOULDER WOULD BE NECESSARY.

7. DIVERT TRAFFIC TO NEW SB ENTRANCE RAMP.

FILE NAME	x:\10592-wsdot\26692 salmon creek interchange\13-cadd\13.01-engdwgs\plans\Stage Construction\L2135_PS_SU_06.dgn				REGION NO.	STATE	FED.AID PROJ.NO.
TIME	12:25:20 PM				10	WASH	XL2135
DATE	8/30/2005				JOB NUMBER		
PLOTTED BY	lmerhaut				L2135		
DESIGNED BY	B. LEBLANC				CONTRACT NO.		LOCATION NO.
ENTERED BY	P. WAGGONER						
CHECKED BY	CHECKED						
PROJ. ENGR.	PORJ. ENG.						
REGIONAL ADM.	REGIONAL ADM	REVISION	DATE	BY			

DATE
P.E. STAMP BOX

BRANDAN E. LeBLANC
STATE OF WASHINGTON
40062
REGISTERED
PROFESSIONAL ENGINEER
EXPIRES APR. 29, 2006

DATE
P.E. STAMP BOX

Washington State
Department of Transportation

SALMON CREEK
134th INTERCHANGE
CLARK COUNTY

STAGE CONSTRUCTION
STAGE 2

PLOT1
SU6
SHEET 6 OF 6 SHEETS

PRELIMINARY PLAN SET

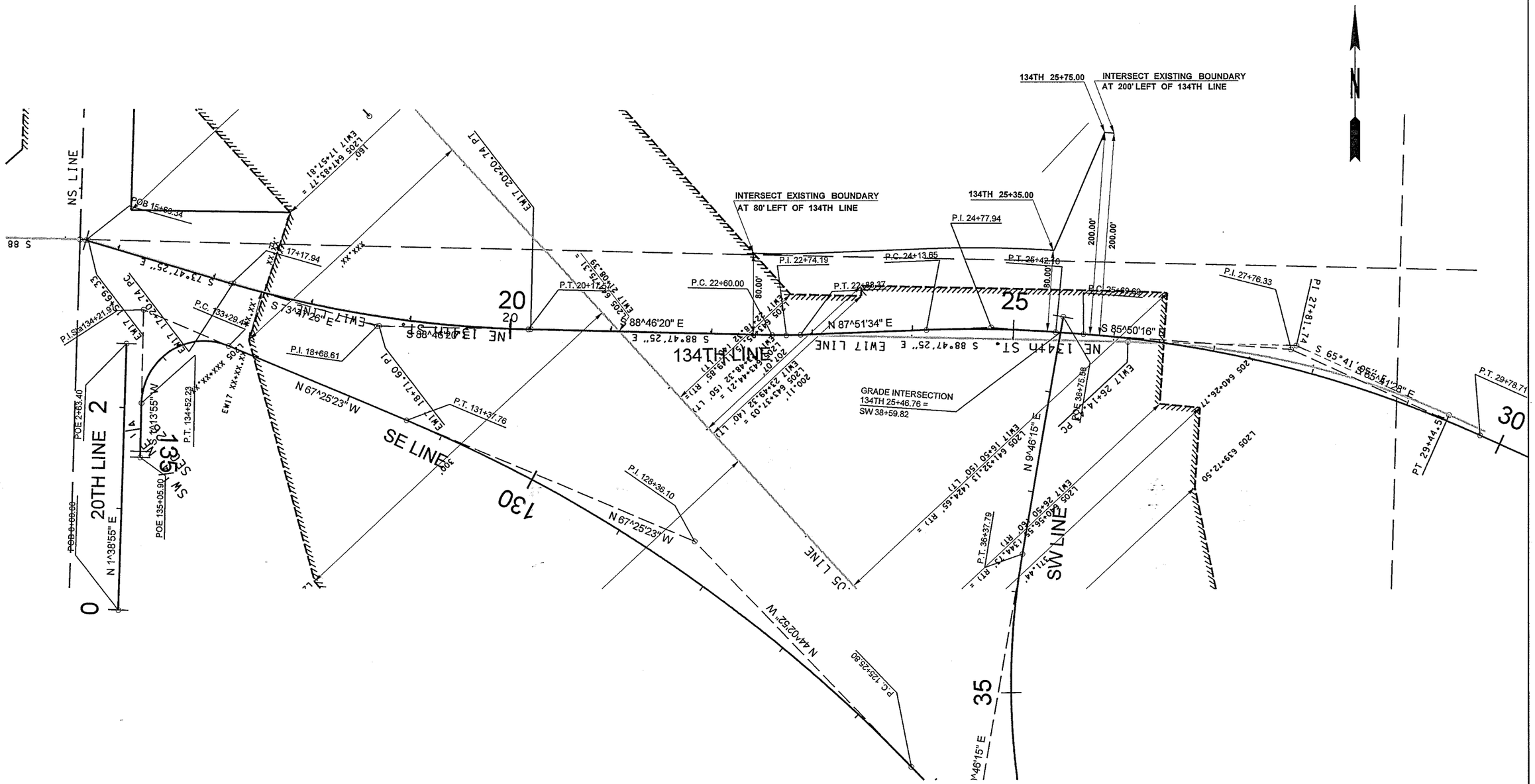

LEGEND

EXISTING RIGHT OF WAY BOUNDARY (Needs to be verified)

PROPOSED FEE ACQUISITION

PROPOSED ACCESS EASEMENT ACQUISITION

0 50 100
SCALE IN FEET

FILE NAME	x:\10592-wsdot\26692 salmon creek interchange\13-cadd\13.01-engdwgs\plans\Alignment\L2135_PS_AL_RW_01.dgn						
TIME	12:23:39 PM				REGION NO. 10	STATE WASH	FED.AID PROJ.NO. L2135
DATE	8/30/2005						
PLOTTED BY	lmerhaut				JOB NUMBER L2135		
DESIGNED BY	B. LEBLANC						
ENTERED BY	P. WAGGONER				CONTRACT NO.		LOCATION NO.
CHECKED BY	CHECKED						
PROJ. ENGR.	PORJ. ENG.						
REGIONAL ADM.	REGIONAL ADM	REVISION	DATE	BY			

DATE
P.E. STAMP BOX

BRANDON E. LEBLANC
STATE OF WASHINGTON
REGISTERED PROFESSIONAL ENGINEER
EXPIRES APR. 29, 2006

DATE
P.E. STAMP BOX

Washington State Department of Transportation

SALMON CREEK
134th INTERCHANGE
CLARK COUNTY

RIGHT OF WAY

PLOT1
AR1
SHEET 1 OF 2 SHEETS

PRELIMINARY PLAN SET

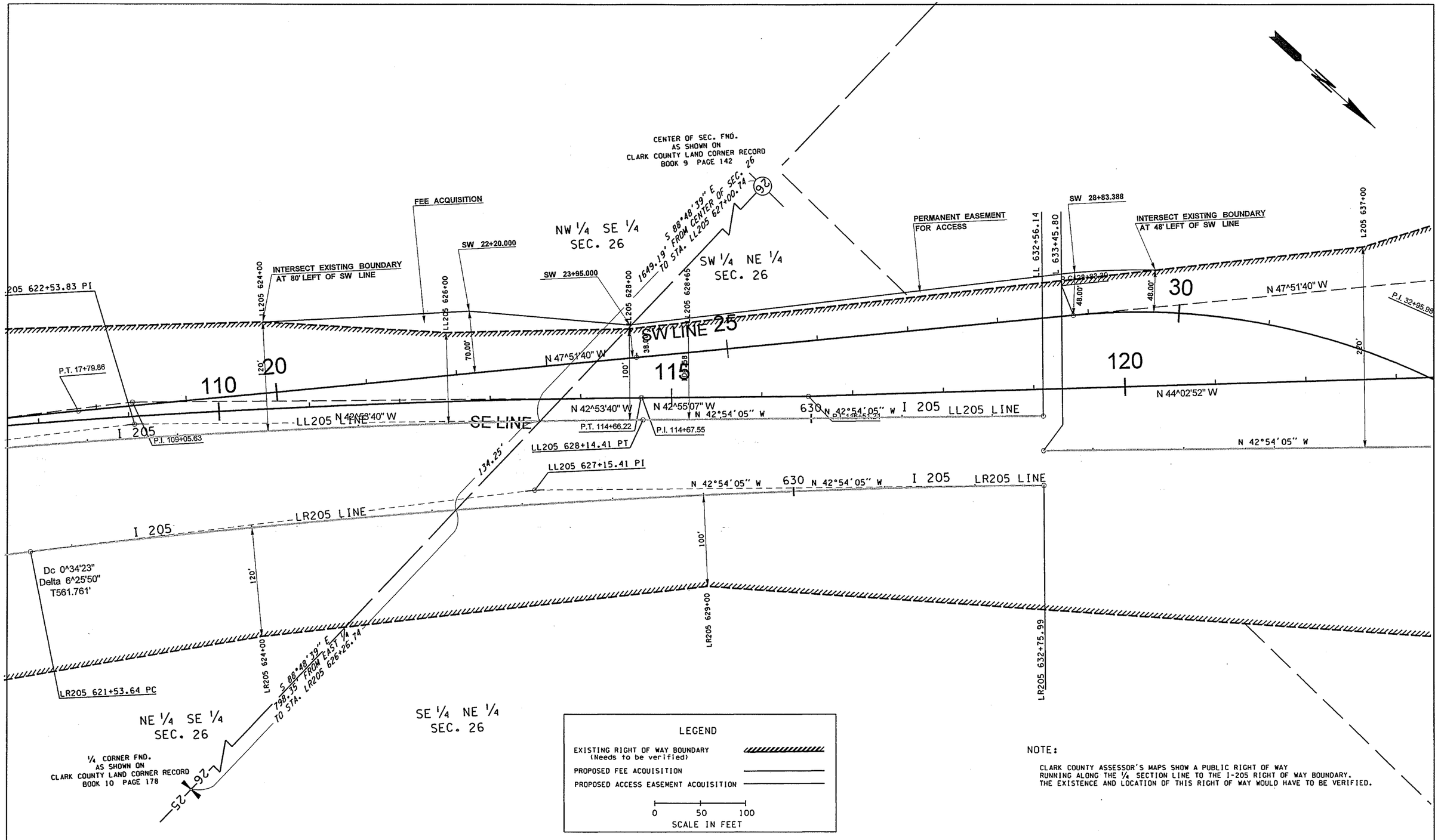

NOTE:

CLARK COUNTY ASSESSOR'S MAPS SHOW A PUBLIC RIGHT OF WAY RUNNING ALONG THE 1/4 SECTION LINE TO THE I-205 RIGHT OF WAY BOUNDARY. THE EXISTENCE AND LOCATION OF THIS RIGHT OF WAY WOULD HAVE TO BE VERIFIED.

FILE NAME	x:\10592-wsdot\26692 salmon creek interchange\13-cadd\13.01-engdwgs\plans\Alignment\L2135_PS_AL_RW_02.dgn				REGION NO.	STATE	FED.AID PROJ.NO.
TIME	12:23:42 PM				10	WASH	XL2135
DATE	8/30/2005				JOB NUMBER		
PLOTTED BY	lmerhaut				L2135		
DESIGNED BY	B. LEBLANC				CONTRACT NO.		LOCATION NO.
ENTERED BY	P. WAGGONER						
CHECKED BY	CHECKED						
PROJ. ENGR.	PORJ. ENG.						
REGIONAL ADM.	REGIONAL ADM	REVISION	DATE	BY			

DATE
P.E. STAMP BOX

BRENDAN E. LEBLANC
STATE OF WASHINGTON
40163
REGISTERED
PROFESSIONAL ENGINEER
EXPIRES APR. 29, 2006
DATE
P.E. STAMP BOX

Washington State
Department of Transportation

SALMON CREEK
134th INTERCHANGE
CLARK COUNTY

RIGHT OF WAY PLAN

PLOT1
AR2
SHEET 2 OF 2 SHEETS

PRELIMINARY PLAN SET

CURVE DATA				
P.I. STATION	DELTA	RADIUS	TANGENT	LENGTH
134TH 22+74.19	3^22'06"	482.52'	14.19'	28.37'
134TH 24+77.94	6^18'10"	1167.69'	64.29'	128.39'
134TH 27+76.33	20^08'48"	1163.26'	206.64'	409.02'

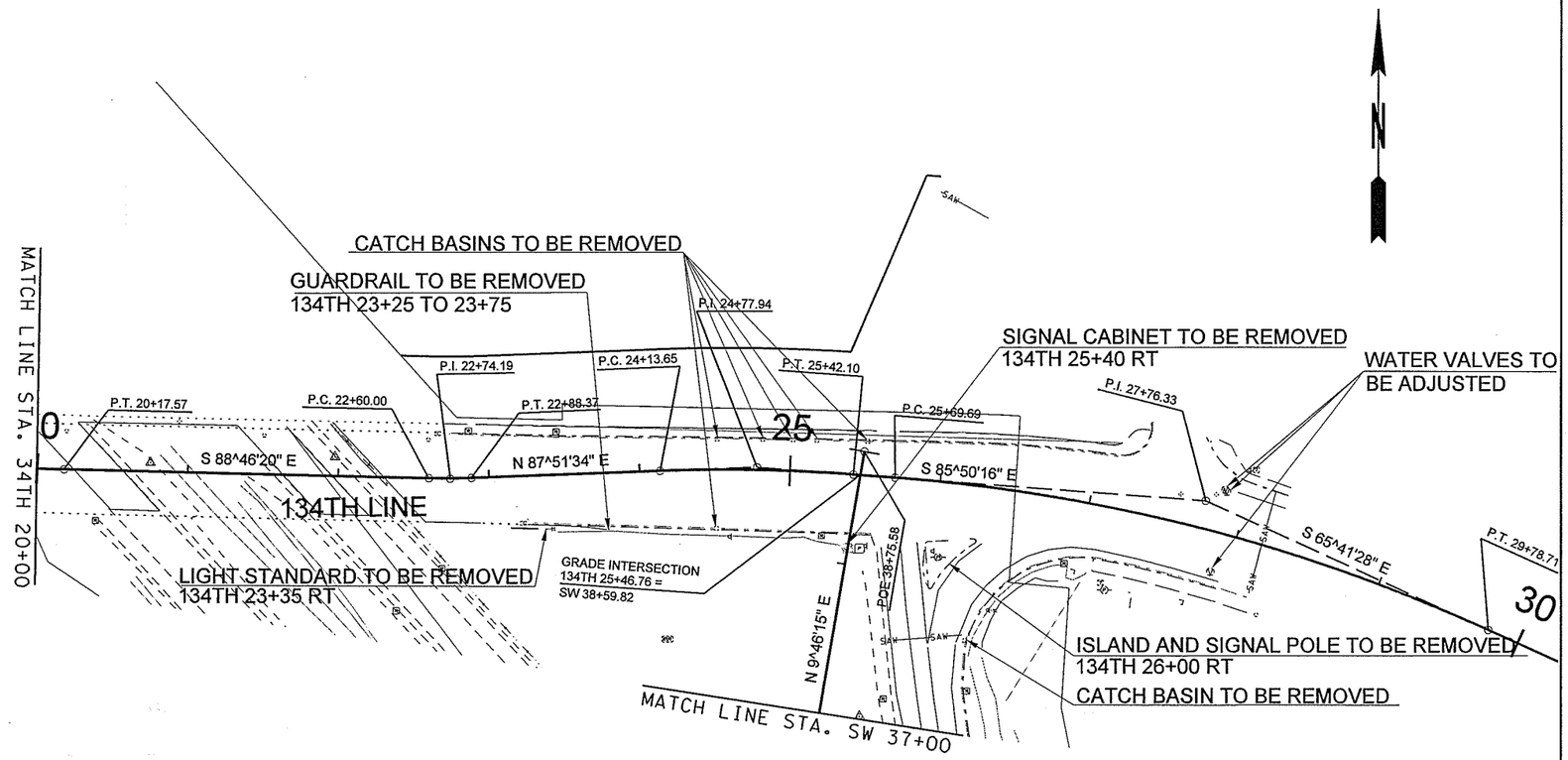

LEGEND

- EXISTING CATCH BASIN
- EXISTING SIGNAL POLE
- EXISTING SIGNAL CONTROL CABINET
- EXISTING LIGHT STANDARD
- EXISTING WATER VALVE
- PROPOSED SAWCUT LINE

0 100 200

SCALE IN FEET

FILE NAME	x:\10592-wsdot\26692 salmon creek interchange\13-cadd\13.01-engdwgs\plans\Site Prep\L2135_PS_SP_01.dgn				REGION NO.	STATE	FED.AID PROJ.NO.
TIME	12:24:36 PM				10	WASH	
DATE	8/30/2005				JOB NUMBER		XL2135
PLOTTED BY	lmerhaut				L2135		
DESIGNED BY	B. LEBLANC				CONTRACT NO.		LOCATION NO.
ENTERED BY	P. WAGGONER						
CHECKED BY	CHECKED						
PROJ. ENGR.	PORJ. ENG.						
REGIONAL ADM.	REGIONAL ADM	REVISION	DATE	BY			

P.E. STAMP BOX DATE

BRANDAN E. LEBLANC STATE OF WASHINGTON 40615 REGISTERED PROFESSIONAL ENGINEER
EXPIRES APR. 29, 2006
P.E. STAMP BOX DATE

Washington State Department of Transportation

SALMON CREEK
134th INTERCHANGE
CLARK COUNTY

ALIGNMENT & SITE PREPARATION

PLOT1

AS1

SHEET 1 OF 7 SHEETS

PRELIMINARY PLAN SET

CURVE DATA				
P.I. STATION	DELTA	RADIUS	TANGENT	LENGTH
SW 32+95.98	57°37'55"	750.00'	412.59'	754.40'

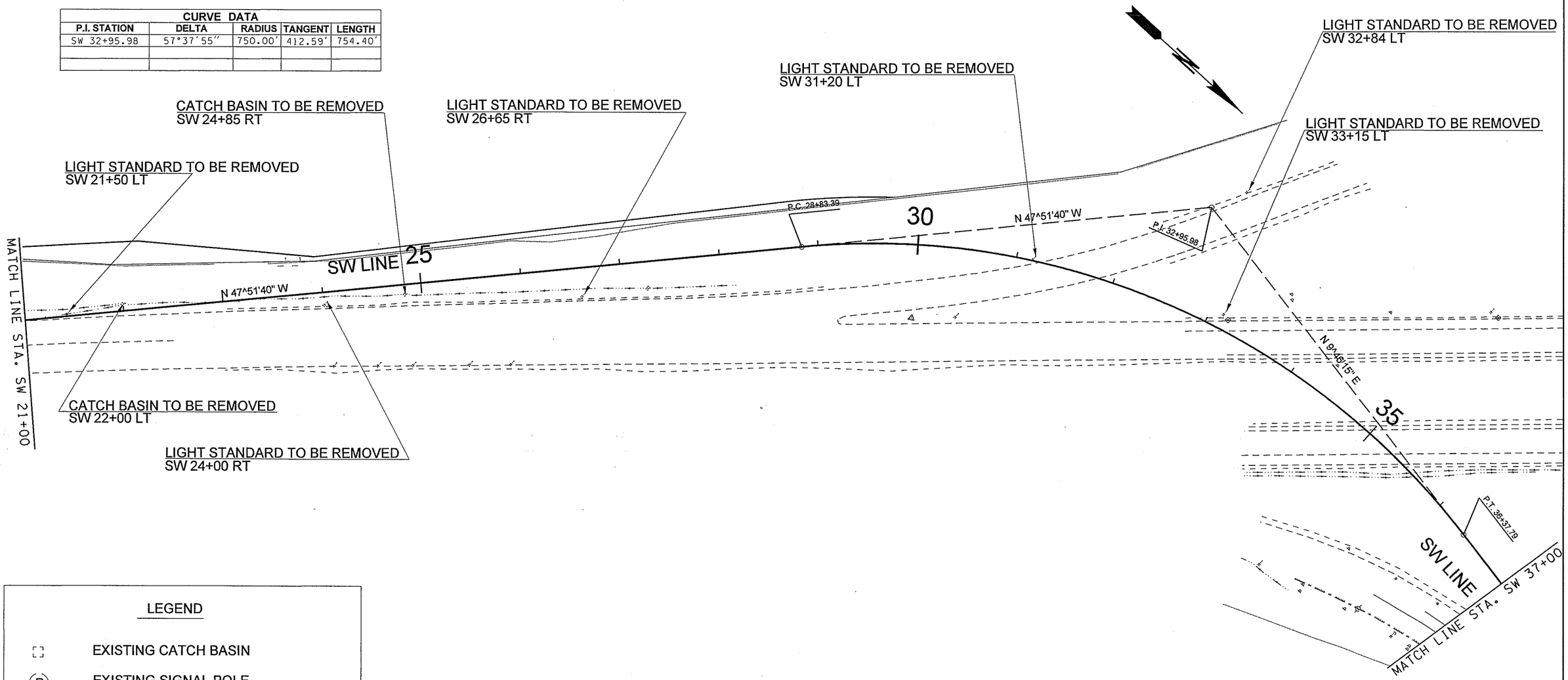

LEGEND

- EXISTING CATCH BASIN
- EXISTING SIGNAL POLE
- EXISTING SIGNAL CONTROL CABINET
- EXISTING LIGHT STANDARD
- EXISTING WATER VALVE
- PROPOSED SAWCUT LINE

0 100 200

SCALE IN FEET

FILE NAME	x:\10592-wsdot\26692 salmon creek interchange\13-cadd\13.01-engdwgs\plans\Site Prep\L2135_PS_SP_02.dgn				REGION NO. 10	STATE WASH	FED.AID PROJ.NO. XL2135
TIME	12:24:39 PM						
DATE	8/30/2005						
PLOTTED BY	lmerhaut				JOB NUMBER L2135		
DESIGNED BY	B. LEBLANC						
ENTERED BY	P. WAGGONER						
CHECKED BY	CHECKED				CONTRACT NO.		LOCATION NO.
PROJ. ENGR.	PORJ. ENG.						
REGIONAL ADM.	REGIONAL ADM	REVISION	DATE	BY			

DATE
P.E. STAMP BOX

BRENDAN E. LeBLANC
STATE OF WASHINGTON
40082
REGISTERED
PROFESSIONAL ENGINEER
EXPIRES APR. 29, 2006

DATE
P.E. STAMP BOX

Washington State
Department of Transportation

SALMON CREEK
134th INTERCHANGE
CLARK COUNTY

ALIGNMENT & SITE PREPARATION

PLOT1
AS2
SHEET 2 OF 7 SHEETS

PRELIMINARY PLAN SET

CURVE DATA				
P.I. STATION	DELTA	RADIUS	TANGENT	LENGTH
SW 14+76.69	2°02′38″	17000.00′	303.23′	606.40′

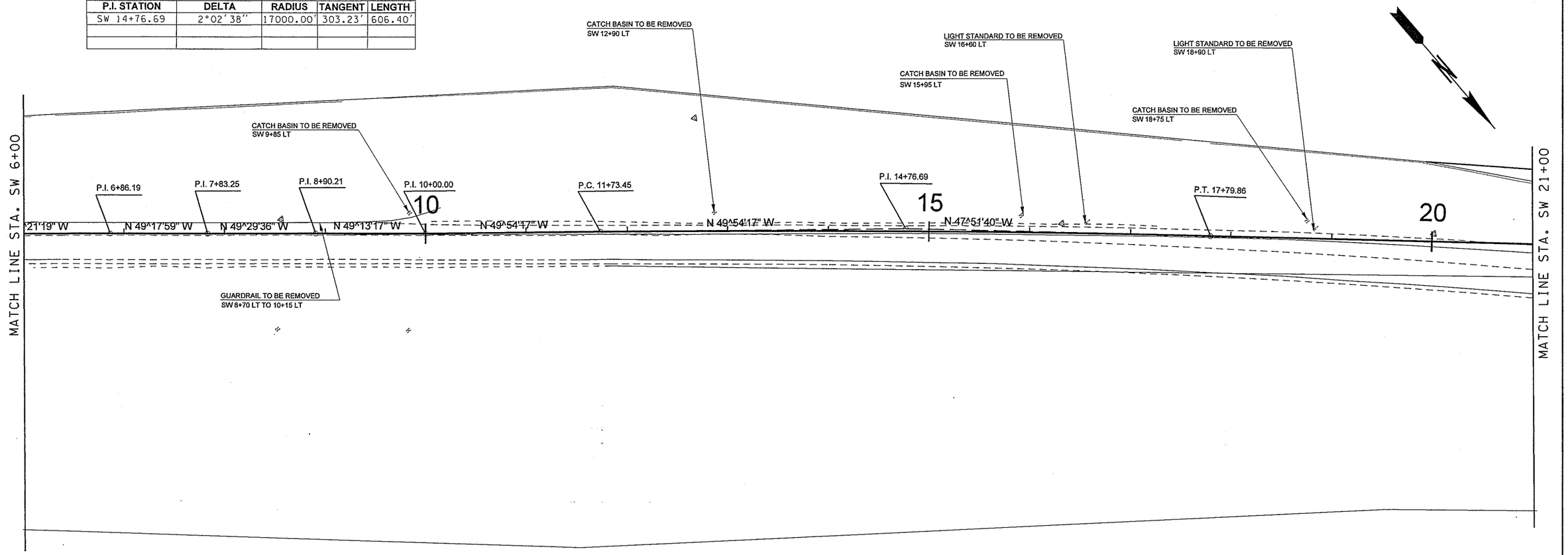

LEGEND

- EXISTING CATCH BASIN
- EXISTING SIGNAL POLE
- EXISTING SIGNAL CONTROL CABINET
- EXISTING LIGHT STANDARD
- EXISTING WATER VALVE
- PROPOSED SAWCUT LINE

0 100 200
SCALE IN FEET

FILE NAME	x:\10592-wsdot\26692 salmon creek interchange\13-cadd\13.01-engdwgs\plans\Site Prep\L2135_PS_SP_03.dgn				
TIME	12:24:42 PM				
DATE	8/30/2005				
PLOTTED BY	Imerhaut				
DESIGNED BY	B. LEBLANC				
ENTERED BY	P. WAGGONER				
CHECKED BY	CHECKED				
PROJ. ENGR.	PORJ. ENG.				
REGIONAL ADM.	REGIONAL ADM	REVISION	DATE	BY	

REGION NO.	STATE	FED. AID PROJ. NO.
10	WASH	XL2135
JOB NUMBER L2135		
CONTRACT NO.		LOCATION NO.

DATE
P.E. STAMP BOX

BRENDAN E. LeBLANC
STATE OF WASHINGTON
40163
REGISTERED
PROFESSIONAL ENGINEER
EXPIRES APR. 29, 2006

DATE
P.E. STAMP BOX

Washington State
Department of Transportation

SALMON CREEK
134th INTERCHANGE
CLARK COUNTY

ALIGNMENT & SITE PREPARATION

PLOT1
AS3
SHEET 3 OF 7 SHEETS

PRELIMINARY PLAN SET

CURVE DATA				
P.I. STATION	DELTA	RADIUS	TANGENT	LENGTH

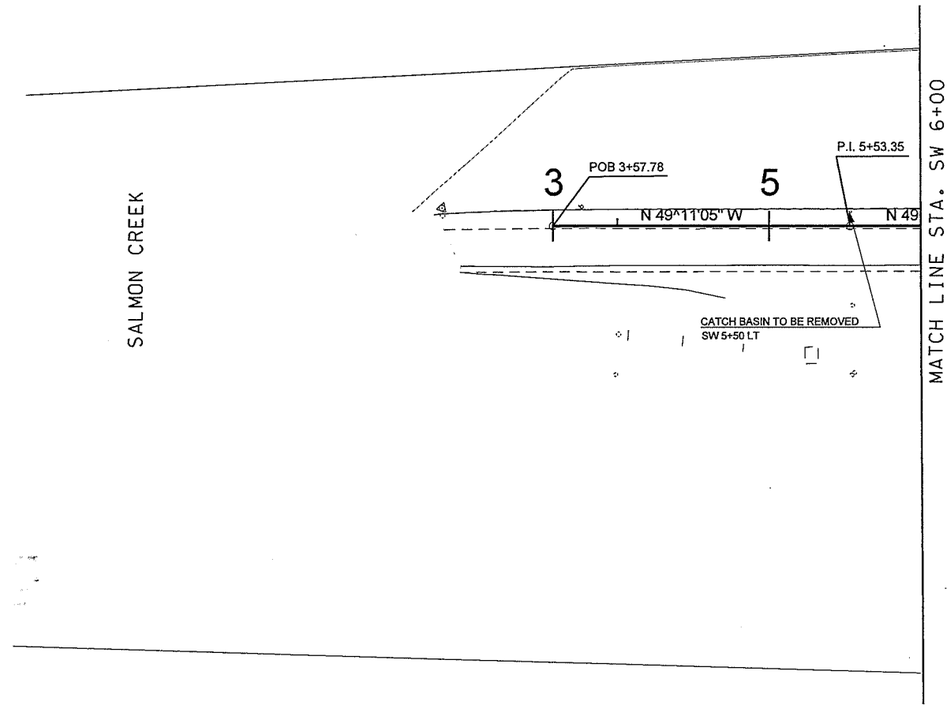

LEGEND

- EXISTING CATCH BASIN
- EXISTING SIGNAL POLE
- EXISTING SIGNAL CONTROL CABINET
- EXISTING LIGHT STANDARD
- EXISTING WATER VALVE
- PROPOSED SAWCUT LINE

0 100 200

SCALE IN FEET

FILE NAME	x:\10592-wsdot\26692 salmon creek interchange\13-cadd\13.01-engdwgs\plans\Site Prep\L2135_PS_SP_04.dgn				REGION NO.	STATE	FED.AID PROJ.NO.
TIME	12:24:45 PM				10	WASH	XL2135
DATE	8/30/2005				JOB NUMBER		
PLOTTED BY	lmerhaut				L2135		
DESIGNED BY	B. LEBLANC				CONTRACT NO.		LOCATION NO.
ENTERED BY	P. WAGGONER						
CHECKED BY	CHECKED						
PROJ. ENGR.	PORJ. ENG.						
REGIONAL ADM.	REGIONAL ADM	REVISION	DATE	BY			

P.E. STAMP BOX DATE

BRANDON E. LeBLANC STATE OF WASHINGTON 40581 REGISTERED PROFESSIONAL ENGINEER
EXPIRES APR. 29, 2006
P.E. STAMP BOX DATE

Washington State Department of Transportation

SALMON CREEK
134th INTERCHANGE
CLARK COUNTY

ALIGNMENT & SITE PREPARATION

PLOT1

AS4

SHEET 4 OF 7 SHEETS

PRELIMINARY PLAN SET

CURVE DATA				
P.I. STATION	DELTA	RADIUS	TANGENT	LENGTH
134TH 18+68.61	14°58′54″	1145.92′	150.68′	299.63′
SE 134+21.97	111°20′42″	63.19′	92.53′	122.79′
SE 128+36.10	23°22′31″	1500.00′	310.30′	611.96′

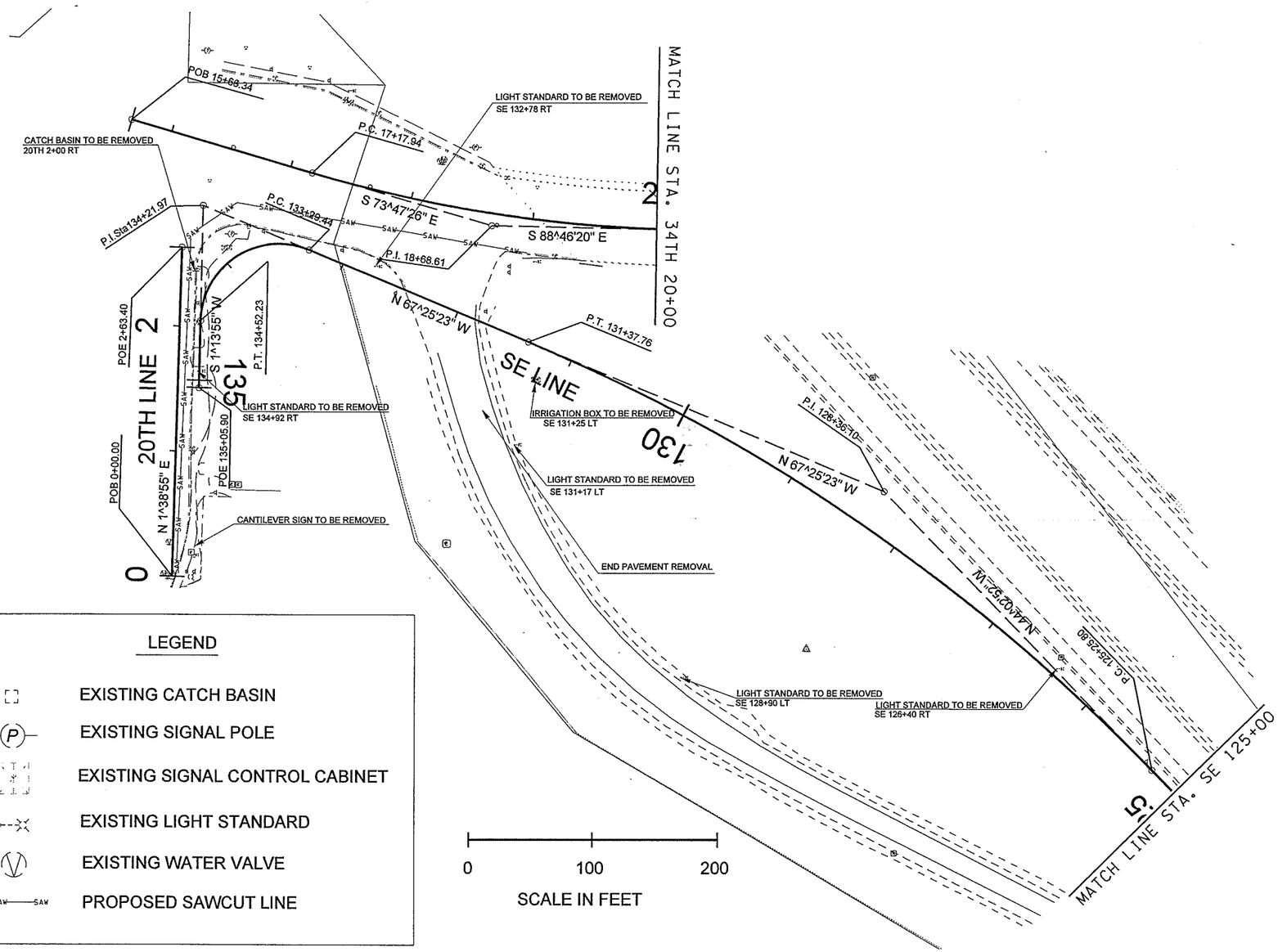

LEGEND

- EXISTING CATCH BASIN
- EXISTING SIGNAL POLE
- EXISTING SIGNAL CONTROL CABINET
- EXISTING LIGHT STANDARD
- EXISTING WATER VALVE
- PROPOSED SAWCUT LINE

FILE NAME	x:\10592-wsdot\26692 salmon creek interchange\13-cadd\13.01-engdwgs\plans\Site Prep\L2135_PS_SP_05.dgn
TIME	12:24:48 PM
DATE	8/30/2005
PLOTTED BY	lmerhaut
DESIGNED BY	B. LEBLANC
ENTERED BY	P. WAGGONER
CHECKED BY	CHECKED
PROJ. ENGR.	PORJ. ENG.
REGIONAL ADM.	REGIONAL ADM

REVISION | DATE | BY

REGION NO. 10 | STATE WASH | FED.AID PROJ.NO. XL2135

JOB NUMBER L2135

CONTRACT NO. | LOCATION NO.

P.E. STAMP BOX — DATE

BRANDON E. LEBLANC, STATE OF WASHINGTON, 40185, REGISTERED PROFESSIONAL ENGINEER, EXPIRES APR. 29, 2006 — P.E. STAMP BOX — DATE

Washington State Department of Transportation

SALMON CREEK
134th INTERCHANGE
CLARK COUNTY

ALIGNMENT & SITE PREPARATION

PLOT1

AS5

SHEET 5 OF 7 SHEETS

PRELIMINARY PLAN SET

CURVE DATA				
P.I. STATION	DELTA	RADIUS	TANGENT	LENGTH

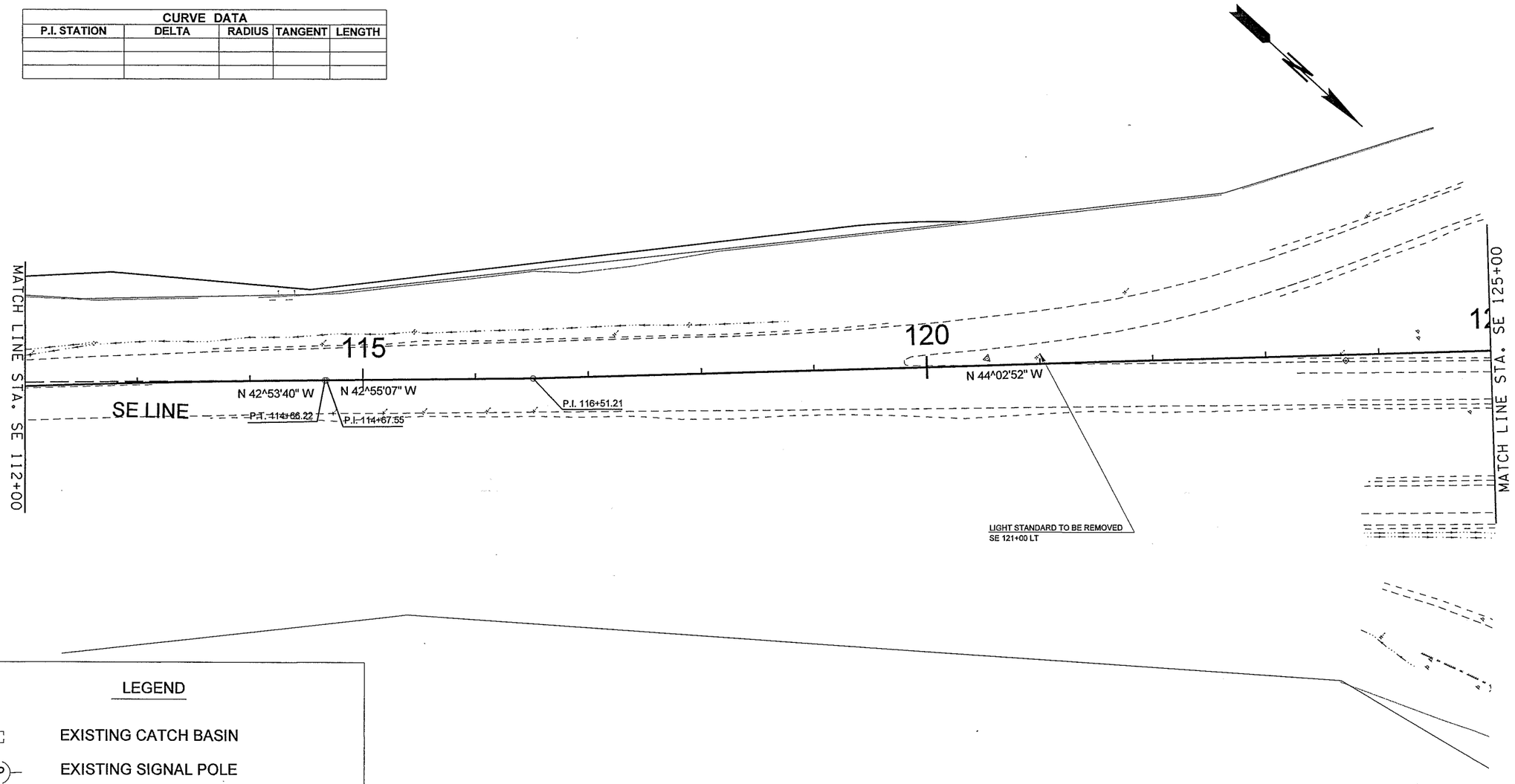

LEGEND

- EXISTING CATCH BASIN
- EXISTING SIGNAL POLE
- EXISTING SIGNAL CONTROL CABINET
- EXISTING LIGHT STANDARD
- EXISTING WATER VALVE
- PROPOSED SAWCUT LINE

0 100 200

SCALE IN FEET

FILE NAME	x:\10592-wsdot\26692 salmon creek interchange\13-cadd\13.01-engdwgs\plans\Site Prep\L2135_PS_SP_06.dgn				REGION NO.	STATE	FED.AID PROJ.NO.
TIME	12:24:51 PM				10	WASH	XL2135
DATE	8/30/2005				JOB NUMBER		
PLOTTED BY	Imerhaut				L2135		
DESIGNED BY	B. LEBLANC				CONTRACT NO.		LOCATION NO.
ENTERED BY	P. WAGGONER						
CHECKED BY	CHECKED						
PROJ. ENGR.	PORJ. ENG.						
REGIONAL ADM.	REGIONAL ADM	REVISION	DATE	BY			

DATE
P.E. STAMP BOX

BRANDON E. LeBLANC
STATE OF WASHINGTON
40063
REGISTERED
PROFESSIONAL ENGINEER
EXPIRES APR. 29, 2006

DATE
P.E. STAMP BOX

Washington State
Department of Transportation

SALMON CREEK
134th INTERCHANGE
CLARK COUNTY

ALIGNMENT & SITE PREPARATION

PLOT1
AS6
SHEET 6 OF 7 SHEETS

PRELIMINARY PLAN SET

CURVE DATA				
P.I. STATION	DELTA	RADIUS	TANGENT	LENGTH
SE 109+05.63	6°25′50″	10000.00′	561.76′	1122.34′

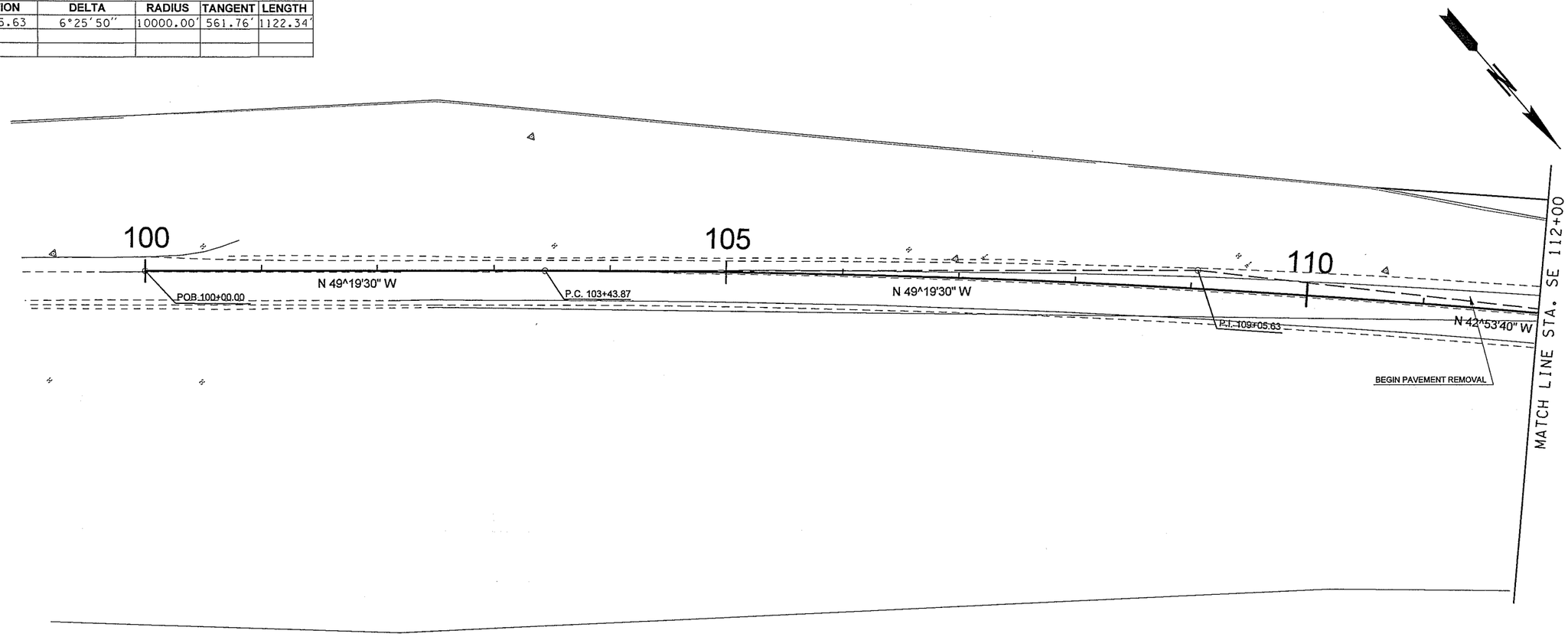

LEGEND

- EXISTING CATCH BASIN
- EXISTING SIGNAL POLE
- EXISTING SIGNAL CONTROL CABINET
- EXISTING LIGHT STANDARD
- EXISTING WATER VALVE
- PROPOSED SAWCUT LINE

0 100 200

SCALE IN FEET

FILE NAME	x:\10592-wsdot\26692 salmon creek interchange\13-cadd\13.01-engdwgs\plans\Site Prep\L2135_PS_SP_07.dgn				REGION NO.	STATE	FED.AID PROJ.NO.
TIME	12:24:53 PM				10	WASH	XL2135
DATE	8/30/2005				JOB NUMBER		
PLOTTED BY	lmerhaut				L2135		
DESIGNED BY	B. LEBLANC				CONTRACT NO.		LOCATION NO.
ENTERED BY	P. WAGGONER						
CHECKED BY	CHECKED						
PROJ. ENGR.	PORJ. ENG.						
REGIONAL ADM.	REGIONAL ADM	REVISION	DATE	BY			

P.E. STAMP BOX DATE

BRANDAN E. LEBLANC STATE OF WASHINGTON 40589 REGISTERED PROFESSIONAL ENGINEER
EXPIRES APR. 29, 2006
P.E. STAMP BOX DATE

Washington State Department of Transportation

SALMON CREEK
134th INTERCHANGE
CLARK COUNTY

ALIGNMENT & SITE PREPARATION

PLOT1
AS7
SHEET 7 OF 7 SHEETS

PRELIMINARY PLAN SET

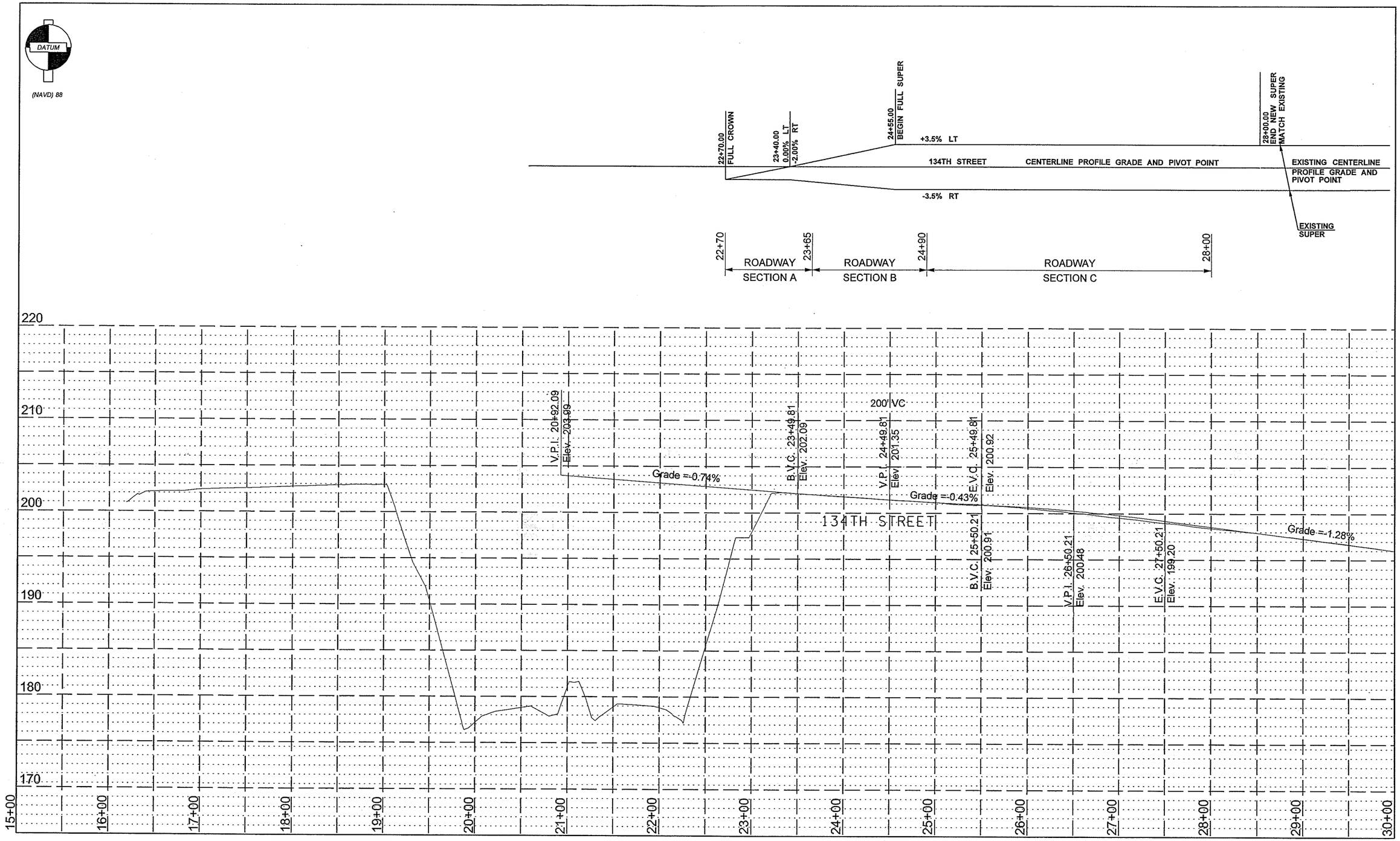

FILE NAME	x:\10592-wsdot\26692 salmon creek interchange\13-cadd\13.01-engdwgs\plans\profiles\L2135_PS_AL_01.dgn
TIME	2:46:17 PM
DATE	8/30/2005
PLOTTED BY	lmerhaut
DESIGNED BY	
ENTERED BY	
CHECKED BY	
PROJ. ENGR.	
REGIONAL ADM.	

REVISION	DATE	BY

REGION NO.	STATE	FED.AID PROJ.NO.
10	WASH	
JOB NUMBER L2135		
CONTRACT NO.		LOCATION NO.

P.E. STAMP BOX DATE

BRENDAN E. LeBLANC STATE OF WASHINGTON 36681 REGISTERED PROFESSIONAL ENGINEER
EXPIRES APR. 29, 2006
P.E. STAMP BOX DATE

Washington State Department of Transportation

SALMON CREEK
134th INTERCHANGE
CLARK COUNTY

PROFILE AND SUPERELEVATION

PLOT1
PR1
SHEET 1 OF 7 SHEETS

PRELIMINARY PLAN SET

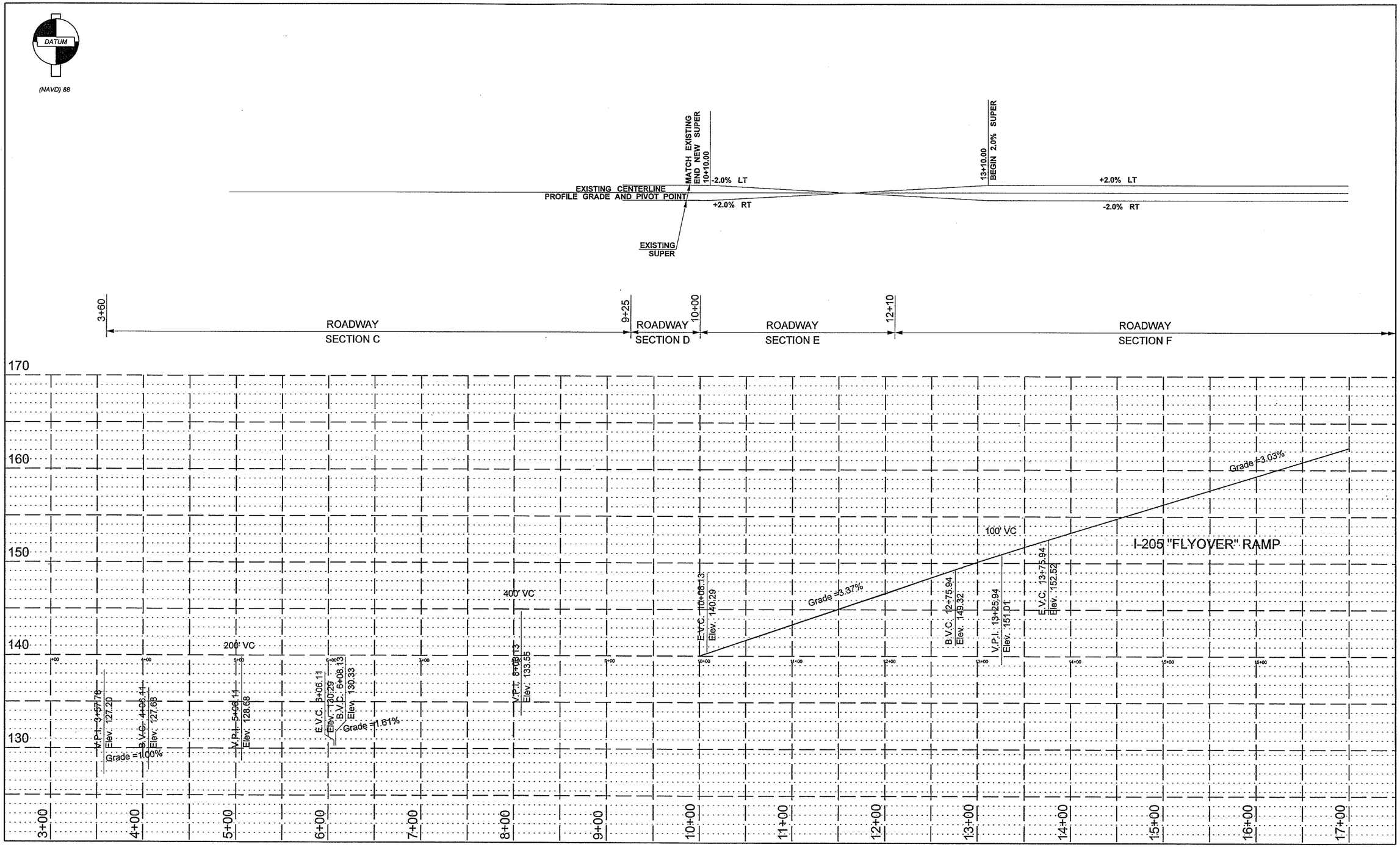

FILE NAME	x:\10592-wsdot\26692 salmon creek interchange\13-cadd\13.01-engdwgs\plans\profiles\L2135_PS_AL_02.dgn				
TIME	2:46:20 PM				
DATE	8/30/2005				
PLOTTED BY	lmerhaut				
DESIGNED BY					
ENTERED BY					
CHECKED BY					
PROJ. ENGR.					
REGIONAL ADM.		REVISION	DATE	BY	

REGION NO.	STATE	FED. AID PROJ. NO.
10	WASH	
JOB NUMBER L2135		
CONTRACT NO.		LOCATION NO.

DATE
P.E. STAMP BOX

BRENDAN E. LeBLANC
STATE OF WASHINGTON
40463
REGISTERED PROFESSIONAL ENGINEER
EXPIRES APR. 29, 2006

DATE
P.E. STAMP BOX

Washington State Department of Transportation

SALMON CREEK
134th INTERCHANGE
CLARK COUNTY

PROFILE AND SUPERELEVATION

PLOT1
PR2

SHEET 2 OF 7 SHEETS

PRELIMINARY PLAN SET

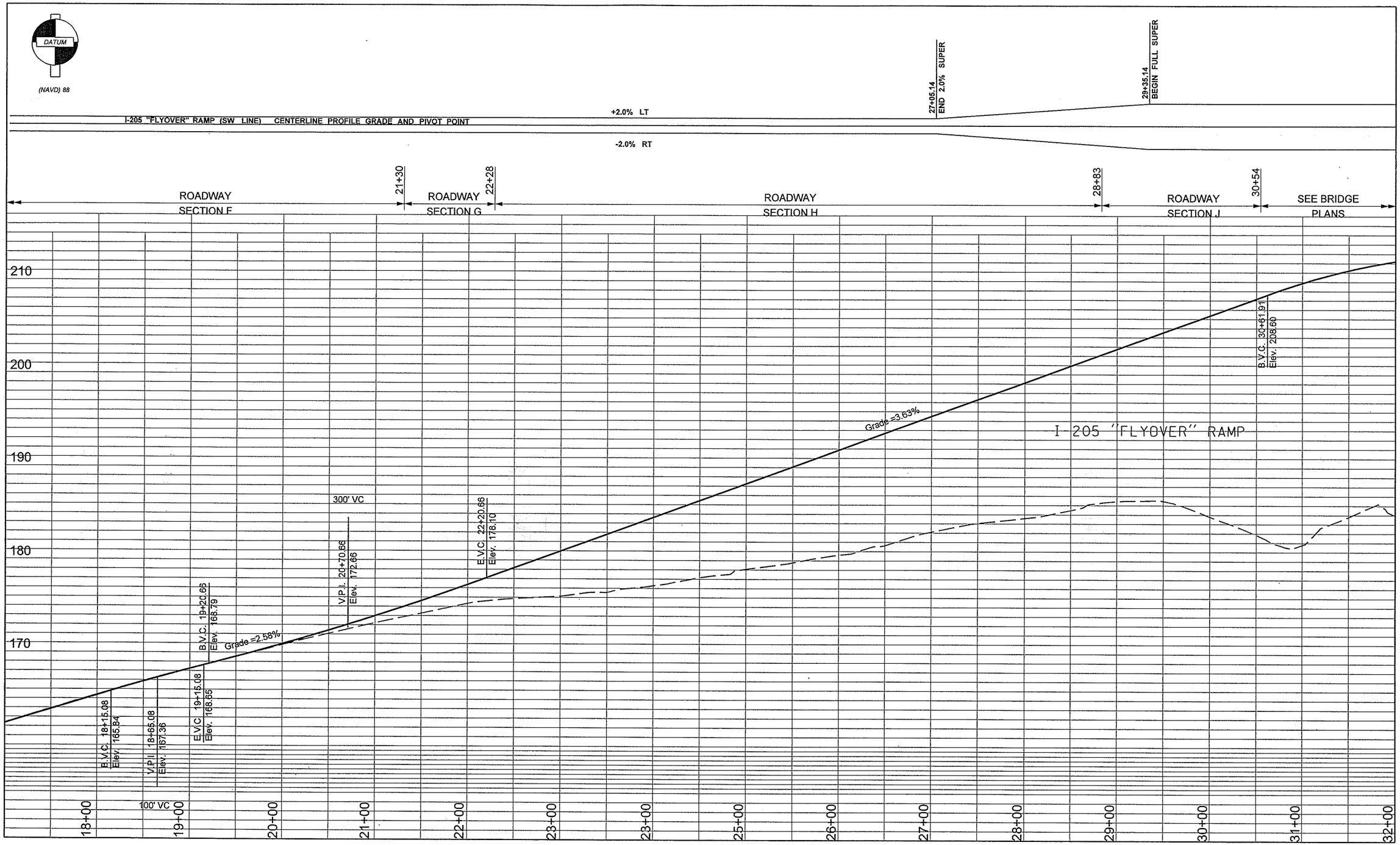

FILE NAME	x:\10592-wsdot\26692 salmon creek interchange\13-cadd\13.01-engdwgs\plans\profiles\L2135_PS_AL_03.dgn
TIME	2:46:23 PM
DATE	8/30/2005
PLOTTED BY	lmerhaut
DESIGNED BY	
ENTERED BY	
CHECKED BY	
PROJ. ENGR.	
REGIONAL ADM.	

REVISION | DATE | BY

REGION NO.	STATE	FED. AID PROJ. NO.
10	WASH	
JOB NUMBER L2135		
CONTRACT NO.		LOCATION NO.

P.E. STAMP BOX DATE

BRENDAN E. LEBLANC STATE OF WASHINGTON 40486 REGISTERED PROFESSIONAL ENGINEER
EXPIRES APR. 29, 2006
P.E. STAMP BOX DATE

Washington State Department of Transportation

SALMON CREEK
134th INTERCHANGE
CLARK COUNTY

PROFILE AND SUPERELEVATION

PLOT1
PR3
SHEET 3 OF 7 SHEETS

PRELIMINARY PLAN SET

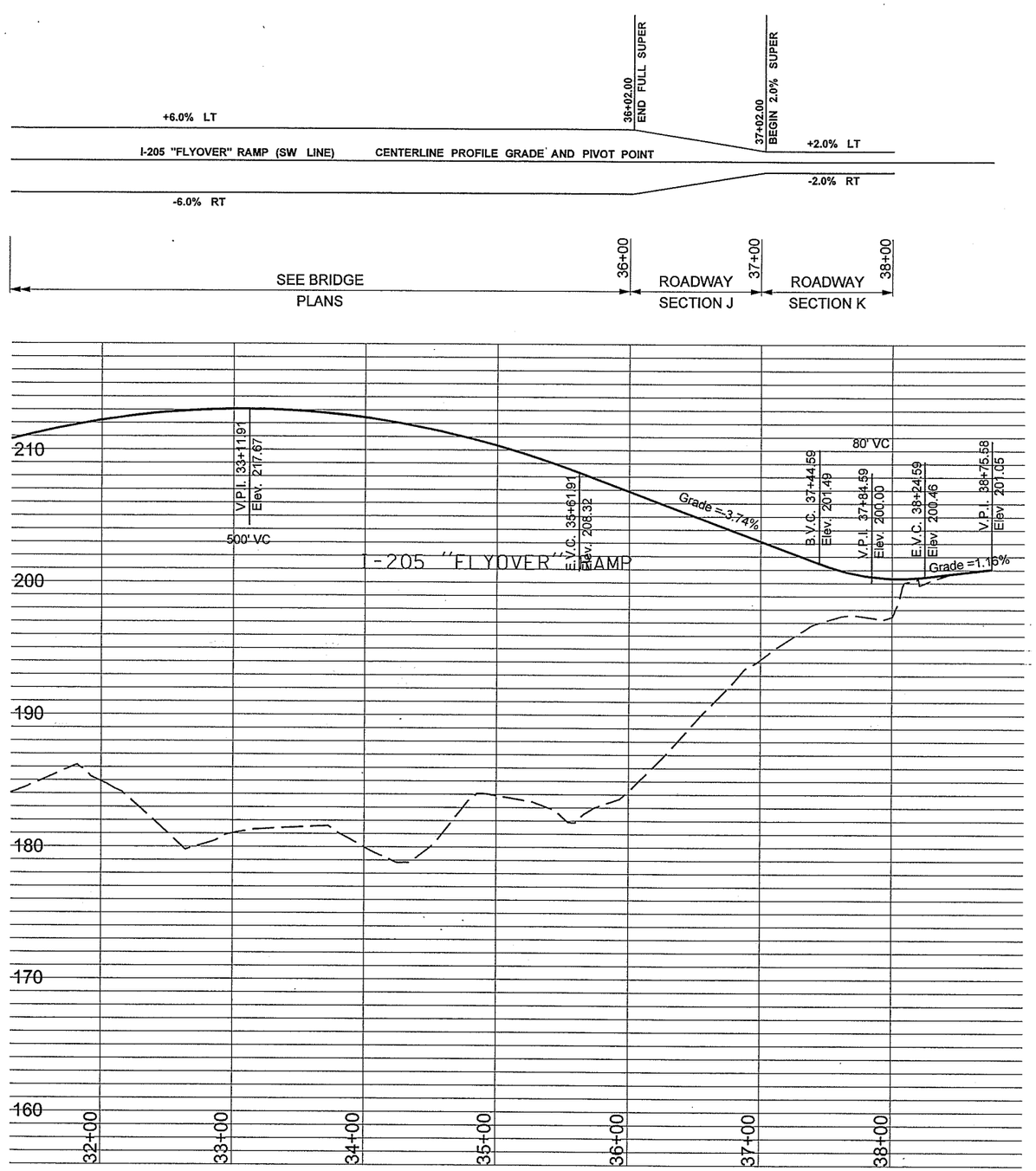

FILE NAME	x:\10592-wsdot\26692 salmon creek interchange\13-cadd\13.01-engdwgs\plans\profiles\L2135_PS_AL_04.dgn					
TIME	2:46:26 PM			REGION NO. 10	STATE WASH	FED. AID PROJ. NO.
DATE	8/30/2005			JOB NUMBER L2135		
PLOTTED BY	lmerhaut			CONTRACT NO.	LOCATION NO.	
DESIGNED BY						
ENTERED BY						
CHECKED BY						
PROJ. ENGR.						
REGIONAL ADM.		REVISION	DATE	BY		

DATE
P.E. STAMP BOX

BRENDAN E. LeBLANC
STATE OF WASHINGTON
40062
REGISTERED
PROFESSIONAL ENGINEER
EXPIRES APR. 29, 2006
DATE
P.E. STAMP BOX

Washington State Department of Transportation

SALMON CREEK
134th INTERCHANGE
CLARK COUNTY

PROFILE AND SUPERELEVATION

PLOT1
PR4
SHEET 4 OF 7 SHEETS

PRELIMINARY PLAN SET

DATUM

(NAVD) 88

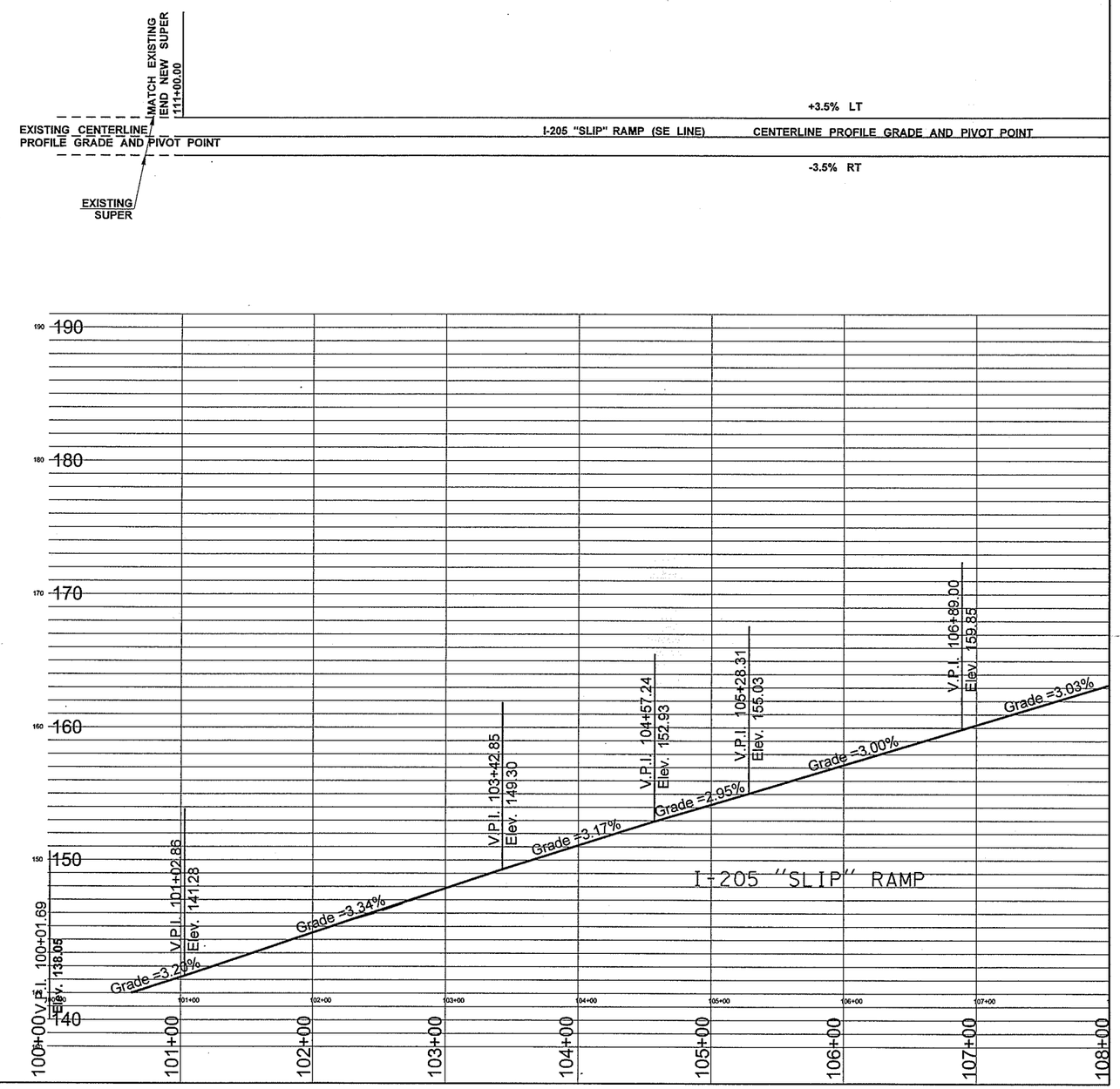

FILE NAME	x:\10592-wsdot\26692 salmon creek interchange\13-cadd\13.01-engdwgs\plans\profiles\L2135_PS_AL_5.dgn						
TIME	2:46:29 PM				REGION NO.	STATE	FED.AID PROJ.NO.
DATE	8/30/2005				10	WASH	
PLOTTED BY	lmerhaut				JOB NUMBER		
DESIGNED BY					L2135		
ENTERED BY					CONTRACT NO.		LOCATION NO.
CHECKED BY							
PROJ. ENGR.							
REGIONAL ADM.		REVISION	DATE	BY			

P.E. STAMP BOX DATE

BRANDON E. LEBLANC
STATE OF WASHINGTON
REGISTERED
PROFESSIONAL ENGINEER
EXPIRES APR. 29, 2006

P.E. STAMP BOX DATE

Washington State
Department of Transportation

SALMON CREEK
134th INTERCHANGE
CLARK COUNTY

PROFILE AND SUPERELEVATION

PLOT1

PR5

SHEET 5 OF 7 SHEETS

PRELIMINARY PLAN SET

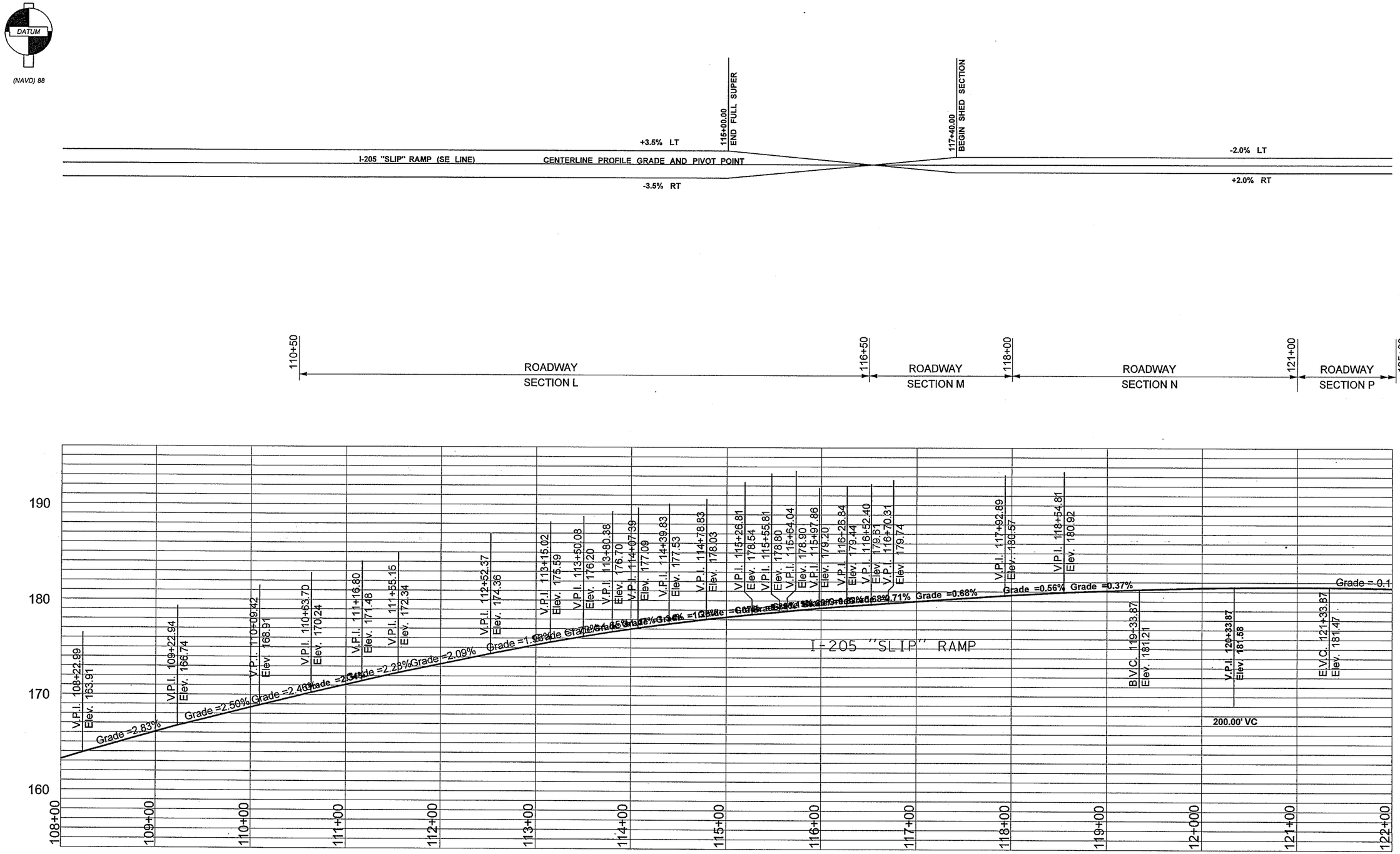

FILE NAME	x:\10592-wsdot\26692 salmon creek interchange\13-cadd\13.01-engdwgs\plans\profiles\L2135_PS_AL_6.dgn
TIME	2:46:32 PM
DATE	8/30/2005
PLOTTED BY	lmerhaut
DESIGNED BY	
ENTERED BY	
CHECKED BY	
PROJ. ENGR.	
REGIONAL ADM.	

REVISION | DATE | BY

REGION NO.	STATE	FED.AID PROJ.NO.
10	WASH	
JOB NUMBER L2135		
CONTRACT NO.		LOCATION NO.

DATE
P.E. STAMP BOX

BRENDAN E. LeBLANC
STATE OF WASHINGTON
REGISTERED PROFESSIONAL ENGINEER
EXPIRES APR. 29, 2006
DATE
P.E. STAMP BOX

Washington State Department of Transportation

SALMON CREEK
134th INTERCHANGE
CLARK COUNTY

PROFILE AND SUPERELEVATION

PLOT1
PR6
SHEET 6 OF 7 SHEETS

PRELIMINARY PLAN SET

DATUM

(NAVD) 88

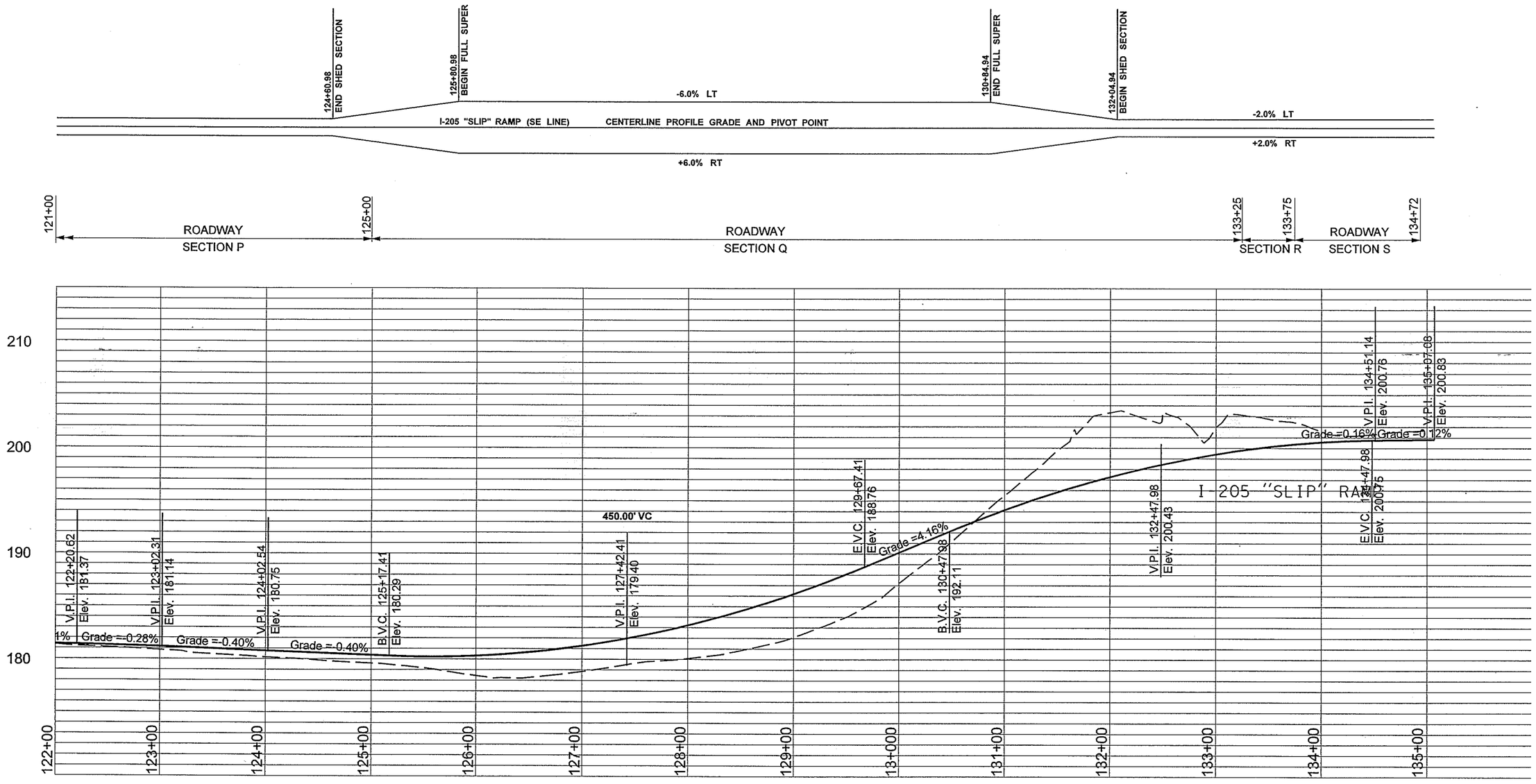

FILE NAME	x:\10592-wsdot\26692 salmon creek interchange\13-cadd\13.01-engdwgs\plans\profiles\L2135_PS_AL_7.dgn
TIME	2:46:35 PM
DATE	8/30/2005
PLOTTED BY	lmerhaut
DESIGNED BY	
ENTERED BY	
CHECKED BY	
PROJ. ENGR.	
REGIONAL ADM.	

REVISION | DATE | BY

REGION NO.	STATE	FED. AID PROJ. NO.
10	WASH	
JOB NUMBER L2135		
CONTRACT NO.		LOCATION NO.

P.E. STAMP BOX — DATE

BRANDAN E. LEBLANC, STATE OF WASHINGTON, 36055, REGISTERED PROFESSIONAL ENGINEER — EXPIRES APR. 29, 2006 — DATE — P.E. STAMP BOX

Washington State Department of Transportation

SALMON CREEK
134th INTERCHANGE
CLARK COUNTY

PROFILE AND SUPERELEVATION

PLOT1

PR7

SHEET 7 OF 7 SHEETS

PRELIMINARY PLAN SET

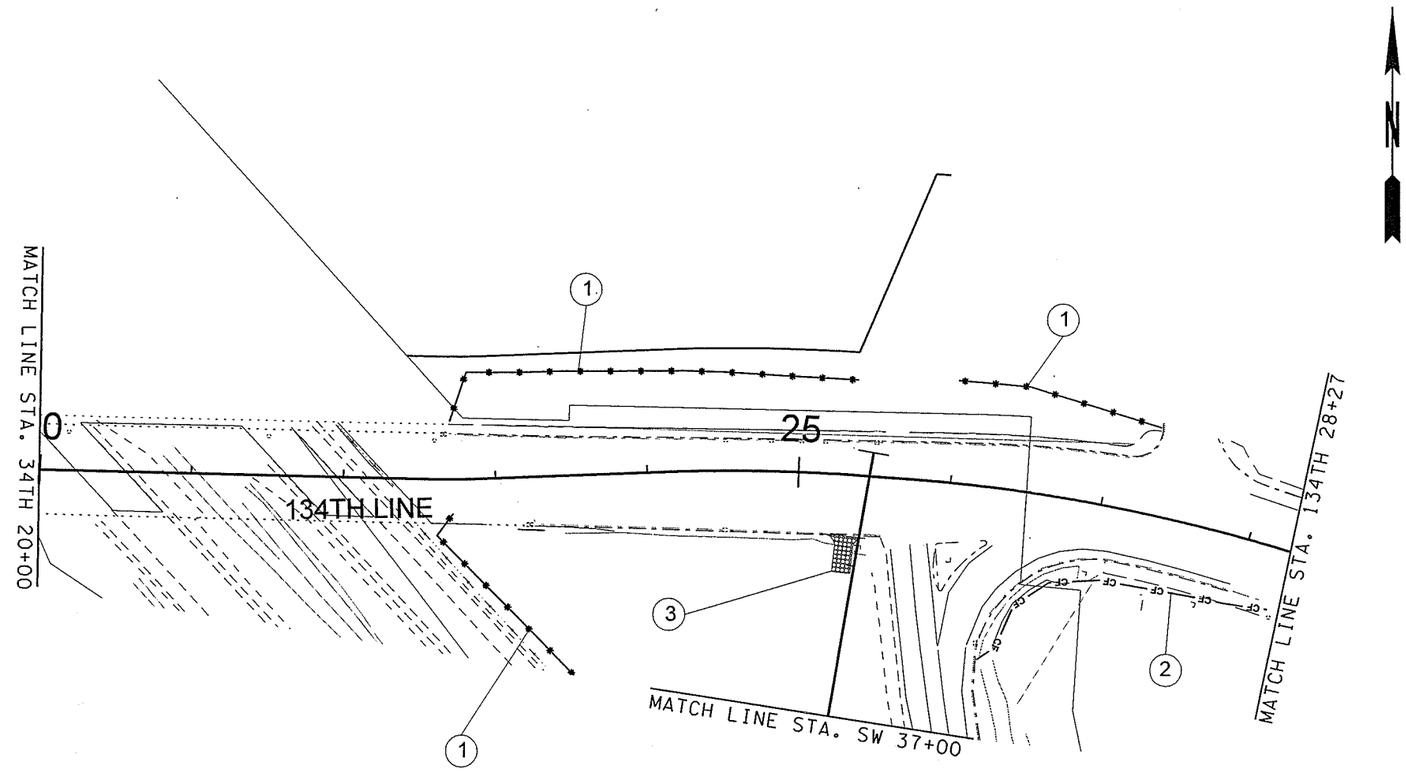

LEGEND

- (1) Erosion and Sediment Structure Note
- Silt Fence
- -CF— CF— CF- Construction Fence
- Stabilized Construction Entrance
- Temporary Sediment Pond (To Become Perm. Pond)
- Straw Bale

0 100 200

SCALE IN FEET

NOTES

1. Const. Silt Fence
2. Const. Construction Fence
3. Const. Stabilized Construction Entrance

FILE NAME	x:\10592-wsdot\26692 salmon creek interchange\13-cadd\13.01-engdwgs\plans\erosion control\L2135_PS_EC_01.dgn					
TIME	1:52:36 PM					
DATE	8/30/2005					
PLOTTED BY	lmerhaut					
DESIGNED BY	B. LEBLANC					
ENTERED BY	P. WAGGONER					
CHECKED BY	CHECKED					
PROJ. ENGR.	PORJ. ENG.					
REGIONAL ADM.	REGIONAL ADM	REVISION	DATE	BY		

REGION NO.	STATE	FED. AID PROJ. NO.
10	WASH	XL2135
JOB NUMBER L2135		
CONTRACT NO.		LOCATION NO.

P.E. STAMP BOX DATE

BRANDAN E. LEBLANC STATE OF WASHINGTON 40183 REGISTERED PROFESSIONAL ENGINEER
EXPIRES APR. 29, 2006
P.E. STAMP BOX DATE

Washington State Department of Transportation

SALMON CREEK
134th INTERCHANGE
CLARK COUNTY

EROSION AND SEDIMENT CONTROL

PLOT1

EC1

SHEET 1 OF 5 SHEETS

PRELIMINARY PLAN SET

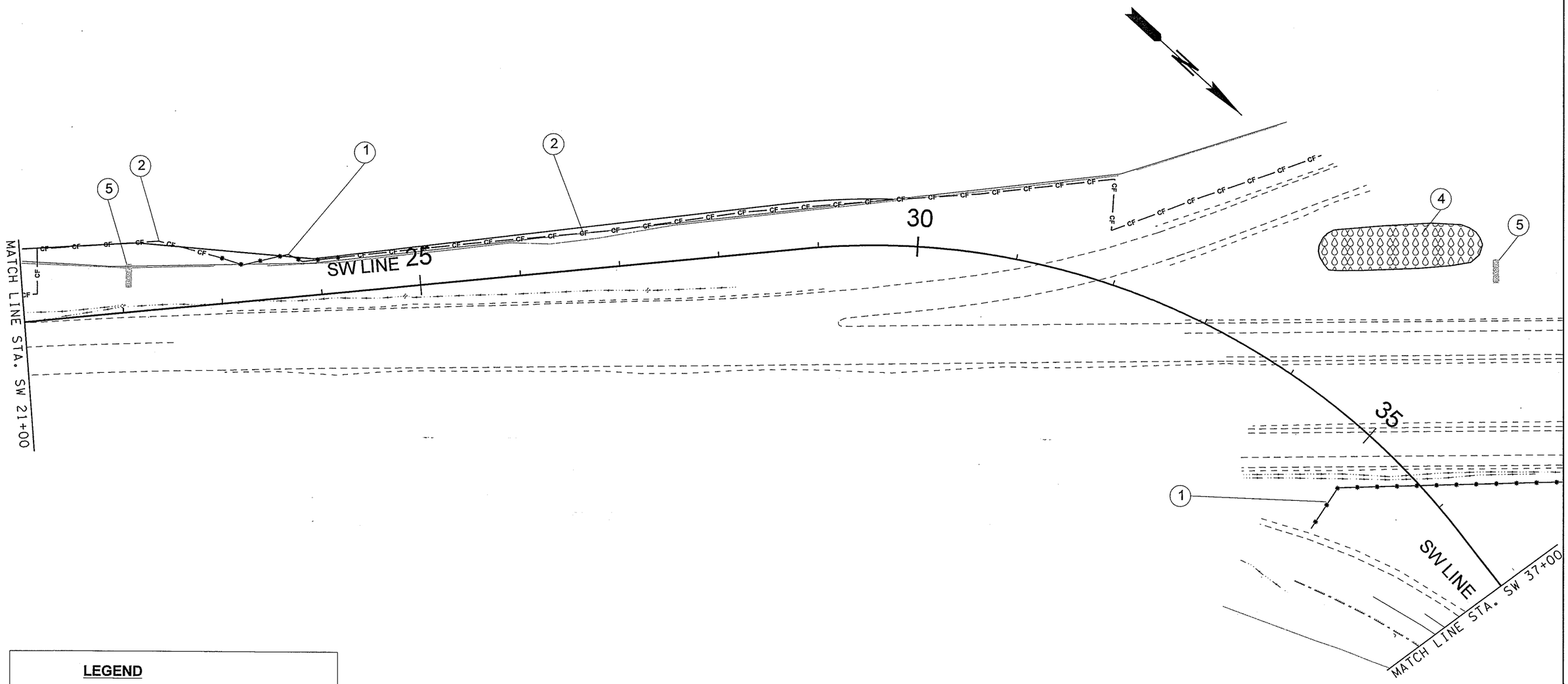

LEGEND

- (1) Erosion and Sediment Structure Note
- Silt Fence
- CF — CF — CF Construction Fence
- Stabilized Construction Entrance
- Temporary Sediment Pond (To become permanent pond)
- Straw Bale

0 100 200

SCALE IN FEET

NOTES

1. Const. Silt Fence
2. Const. Construction Fence
3. Const. Temporary Sediment Pond
4. Const. Straw Bale Check Dam

FILE NAME	x:\10592-wsdot\26692 salmon creek interchange\13-cadd\13.01-engdwgs\plans\erosion control\L2135_PS_EC_02.dgn				REGION NO. 10	STATE WASH	FED.AID PROJ.NO. XL2135
TIME	1:52:39 PM				JOB NUMBER L2135		
DATE	8/30/2005				CONTRACT NO.		LOCATION NO.
PLOTTED BY	lmerhaut						
DESIGNED BY	B. LEBLANC						
ENTERED BY	P. WAGGONER						
CHECKED BY	CHECKED						
PROJ. ENGR.	PORJ. ENG.						
REGIONAL ADM.	REGIONAL ADM	REVISION	DATE	BY			

DATE
P.E. STAMP BOX

BRENDAN E. LeBLANC
STATE OF WASHINGTON
40952
REGISTERED PROFESSIONAL ENGINEER
EXPIRES APR. 29, 2006
DATE
P.E. STAMP BOX

Washington State Department of Transportation

SALMON CREEK
134th INTERCHANGE
CLARK COUNTY

EROSION AND SEDIMENT CONTROL

PLOT1
EC2
SHEET 2 OF 5 SHEETS

PRELIMINARY PLAN SET

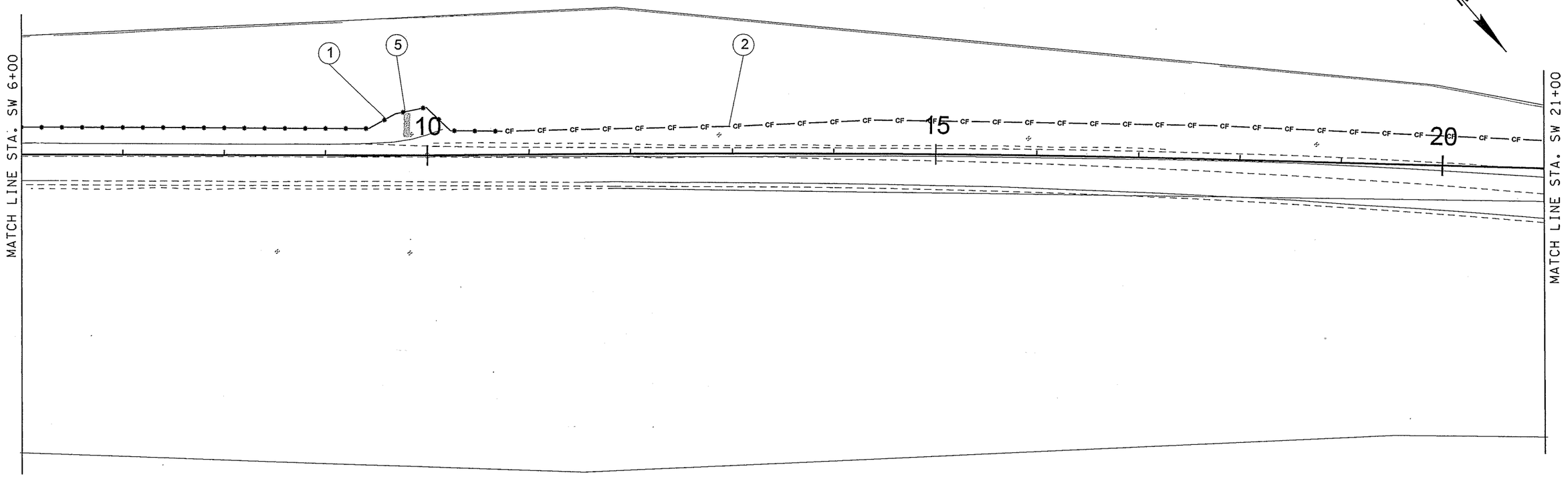

LEGEND

- ① Erosion and Sediment Structure Note
- Silt Fence
- CF — CF — CF Construction Fence
- Stabilized Construction Entrance
- Temporary Sediment Pond (To Become Permanent Pond)
- Straw Bale

0 100 200

SCALE IN FEET

NOTES

① Const. Silt Fence
② Const. Construction Fence
⑤ Const. Straw Bale Check Dam

FILE NAME	x:\10592-wsdot\26692 salmon creek interchange\13-cadd\13.01-engdwgs\plans\erosion control\L2135_PS_EC_03.dgn				REGION NO. 10	STATE WASH	FED.AID PROJ.NO. XL2135
TIME	1:52:42 PM						
DATE	8/30/2005						
PLOTTED BY	Imerhaut						
DESIGNED BY	B. LEBLANC				JOB NUMBER L2135		
ENTERED BY	P. WAGGONER						
CHECKED BY	CHECKED				CONTRACT NO.		LOCATION NO.
PROJ. ENGR.	PORJ. ENG.						
REGIONAL ADM.	REGIONAL ADM	REVISION	DATE	BY			

P.E. STAMP BOX DATE

BRENDAN E. LEBLANC STATE OF WASHINGTON 40168 REGISTERED PROFESSIONAL ENGINEER
EXPIRES APR. 29, 2006
P.E. STAMP BOX DATE

Washington State Department of Transportation

SALMON CREEK
134th INTERCHANGE
CLARK COUNTY

EROSION AND SEDIMENT CONTROL

PLOT1
EC3
SHEET 3 OF 5 SHEETS

PRELIMINARY PLAN SET

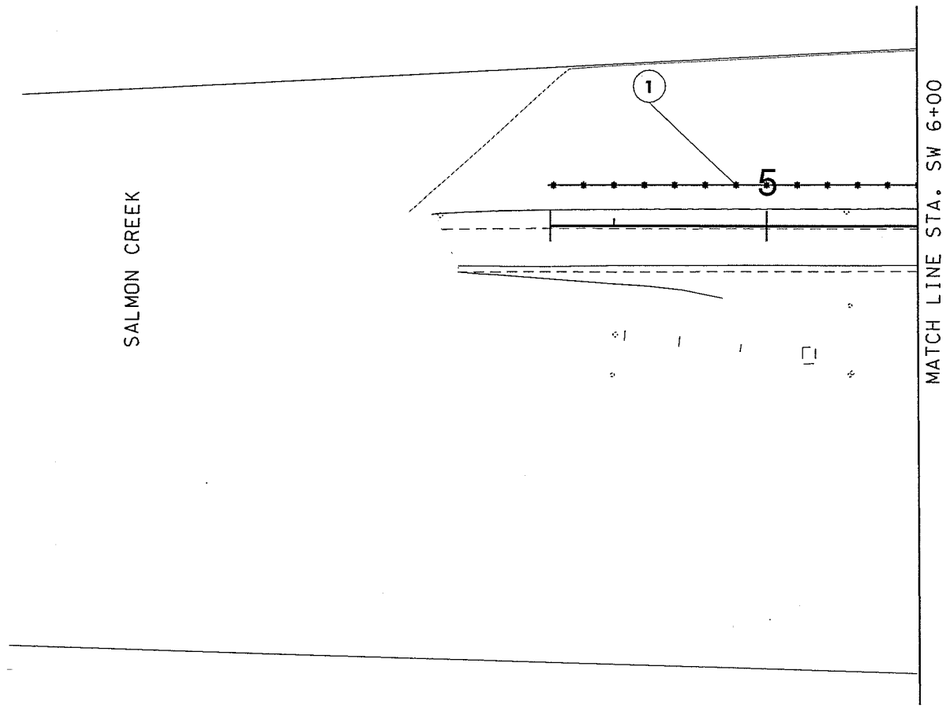

LEGEND

- ① Erosion and Sediment Structure Note
- Silt Fence
- CF — CF — CF — Construction Fence
- Stabilized Construction Entrance
- Temporary Sediment Pond (To become permanent pond)
- Straw Bale

0 100 200

SCALE IN FEET

NOTES

1. Const. Silt Fence
2. Const. Construction Fence

FILE NAME	x:\10592-wsdot\26692 salmon creek interchange\13-cadd\13.01-engdwgs\plans\erosion control\L2135_PS_EC_04.dgn
TIME	1:52:45 PM
DATE	8/30/2005
PLOTTED BY	Imerhaut
DESIGNED BY	B. LEBLANC
ENTERED BY	P. WAGGONER
CHECKED BY	CHECKED
PROJ. ENGR.	PORJ. ENG.
REGIONAL ADM.	REGIONAL ADM

REVISION	DATE	BY

REGION NO.	STATE	FED.AID PROJ.NO.
10	WASH	XL2135
JOB NUMBER L2135		
CONTRACT NO.		LOCATION NO.

P.E. STAMP BOX DATE

BRANDON R. LEBLANC STATE OF WASHINGTON 40565 REGISTERED PROFESSIONAL ENGINEER
EXPIRES APR. 29, 2006
P.E. STAMP BOX DATE

Washington State Department of Transportation

SALMON CREEK
134th INTERCHANGE
CLARK COUNTY

EROSION AND SEDIMENT CONTROL

PLOT1

EC4

SHEET 4 OF 5 SHEETS

PRELIMINARY PLAN SET

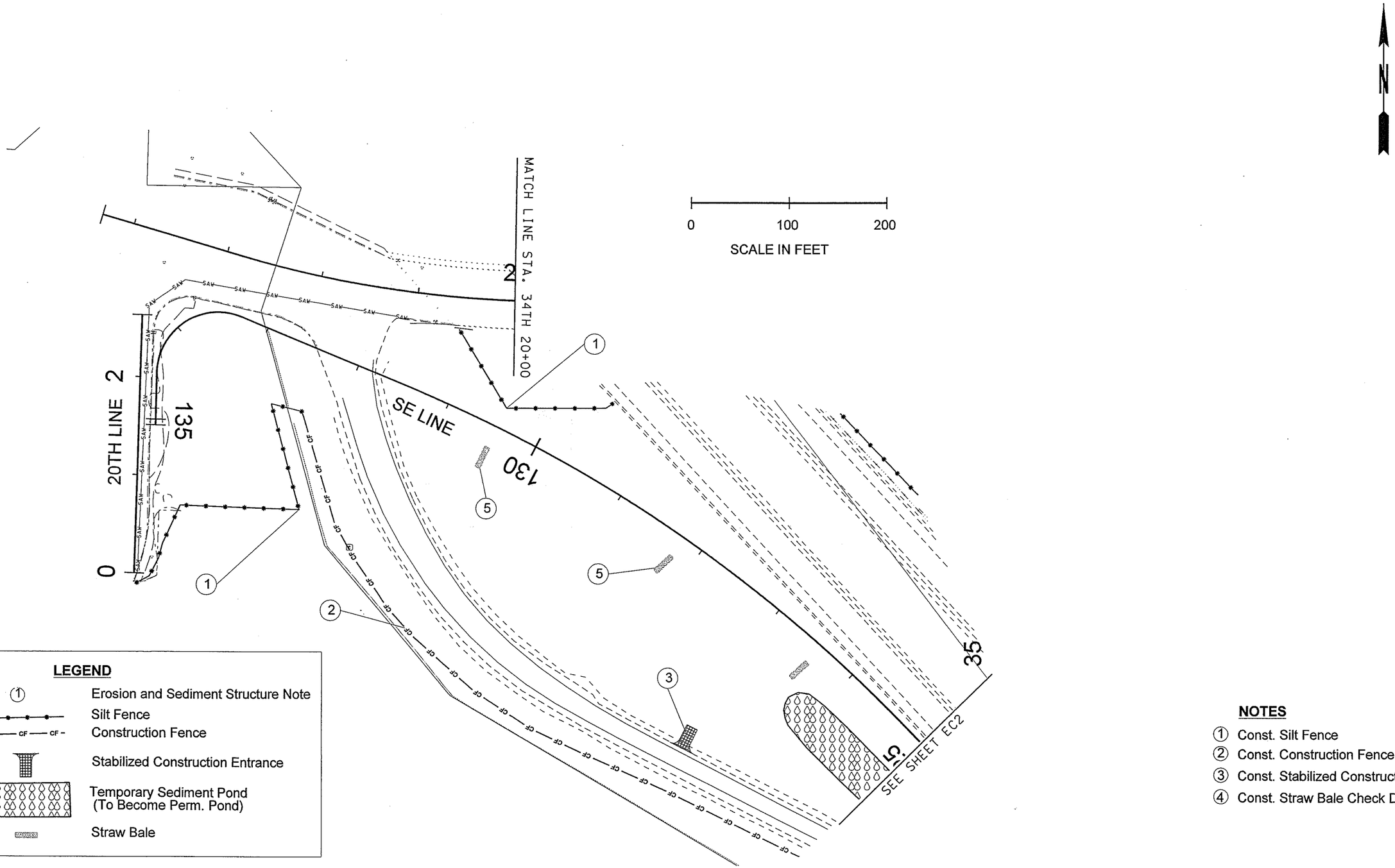

NOTES

1. Const. Silt Fence
2. Const. Construction Fence
3. Const. Stabilized Construction Entrance
4. Const. Straw Bale Check Dam

FILE NAME	x:\10592-wsdot\26692 salmon creek interchange\13-cadd\13.01-engdwgs\plans\erosion control\L2135_PS_EC_05.dgn						
TIME	1:52:48 PM				REGION NO. 10	STATE WASH	FED.AID PROJ.NO. XL2135
DATE	8/30/2005						
PLOTTED BY	lmerhaut				JOB NUMBER L2135		
DESIGNED BY	B. LEBLANC						
ENTERED BY	P. WAGGONER				CONTRACT NO.		LOCATION NO.
CHECKED BY	CHECKED						
PROJ. ENGR.	PORJ. ENG.						
REGIONAL ADM.	REGIONAL ADM	REVISION	DATE	BY			

P.E. STAMP BOX DATE

BRANDON E. LeBLANC STATE OF WASHINGTON 40183 REGISTERED PROFESSIONAL ENGINEER
EXPIRES APR. 29, 2006
P.E. STAMP BOX DATE

Washington State Department of Transportation

SALMON CREEK
134th INTERCHANGE
CLARK COUNTY

EROSION AND SEDIMENT CONTROL

PLOT1
EC5
SHEET 5 OF 5 SHEETS

PRELIMINARY PLAN SET

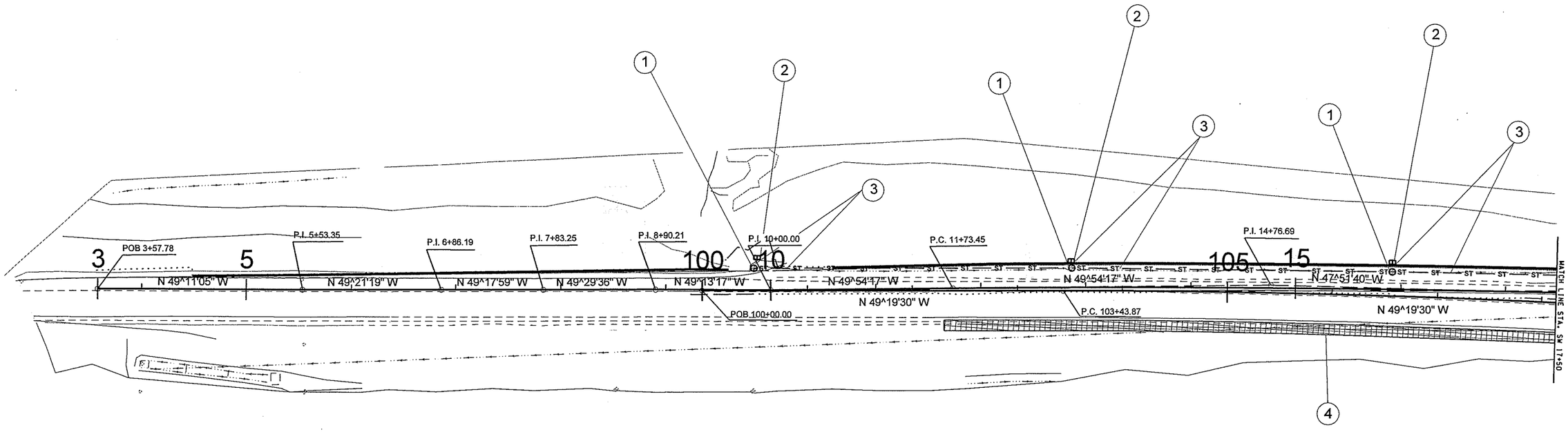

LEGEND

①	Drainage Structure Note
-ST—ST—ST-	New Storm Line
←—	New Ditch
○	New Manhole
▫	New Inlet
▨	New Ecol. Embankment

NOTES

1. Const. Manhole
2. Const. Storm Inlet
3. Const. Storm Line
4. Const. Ecol. Embankment

0 50 100
SCALE IN FEET

FILE NAME	x:\10592-wsdot\26692 salmon creek interchange\13-cadd\13.01-engdwgs\plans\Drainage_Utilities\L2135_PS_DR_01.dgn						
TIME	12:23:46 PM				REGION NO. 10	STATE WASH	FED.AID PROJ.NO. XL2135
DATE	8/30/2005						
PLOTTED BY	lmerhaut				JOB NUMBER L2135		
DESIGNED BY	B. LEBLANC						
ENTERED BY	P. WAGGONER				CONTRACT NO. CONT. #		LOCATION NO. LOCATION
CHECKED BY	CHECKED						
PROJ. ENGR.	PORJ. ENG.						
REGIONAL ADM.	REGIONAL ADM	REVISION	DATE	BY			

DATE
P.E. STAMP BOX

BRENDAN E. LeBLANC
STATE OF WASHINGTON
40063
REGISTERED
PROFESSIONAL ENGINEER
EXPIRES APR. 29, 2006
DATE
P.E. STAMP BOX

Washington State
Department of Transportation

SALMON CREEK
134th INTERCHANGE
CLARK COUNTY

STORMWATER DRAINAGE PLAN

PLOT1
1

SHEET 1 OF 4 SHEETS

PRELIMINARY PLAN SET

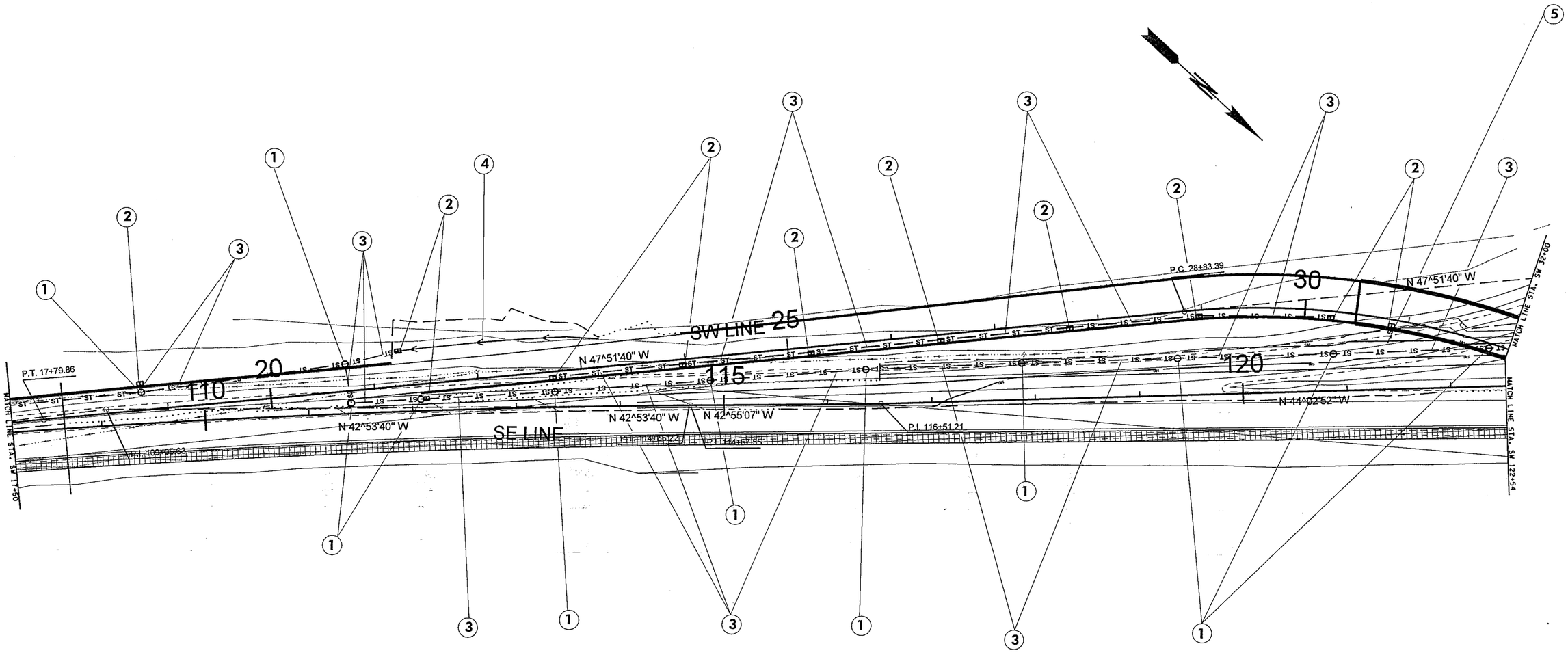

LEGEND

(1)	Drainage Structure Note
-ST—ST—ST—	New Storm Line
——<——	New Ditch
o	New Manhole
▫	New Inlet

0 50 100
SCALE IN FEET

NOTES

1. Const. Manhole
2. Const. Storm Inlet
3. Const. Storm Line
4. Const. Ditch
5. Const. Bridge Drain

FILE NAME	x:\10592-wsdot\26692 salmon creek interchange\13-cadd\13.01-engdwgs\plans\Drainage_Utilities\L2135_PS_DR_02.dgn				REGION NO. 10	STATE WASH	FED.AID PROJ.NO. XL2135
TIME	12:23:49 PM				JOB NUMBER L2135		
DATE	8/30/2005				CONTRACT NO. CONT. #		LOCATION NO. LOCATION
PLOTTED BY	lmerhaut						
DESIGNED BY	B. LEBLANC						
ENTERED BY	P. WAGGONER						
CHECKED BY	CHECKED						
PROJ. ENGR.	PORJ. ENG.						
REGIONAL ADM.	REGIONAL ADM	REVISION	DATE	BY			

DATE
P.E. STAMP BOX

BRANDON E. LEBLANC
STATE OF WASHINGTON
40062
REGISTERED
PROFESSIONAL ENGINEER
EXPIRES APR. 29, 2006
DATE
P.E. STAMP BOX

Washington State
Department of Transportation

SALMON CREEK
134th INTERCHANGE
CLARK COUNTY

STORMWATER DRAINAGE PLAN

PLOT1
2
SHEET 2 OF 4 SHEETS

PRELIMINARY PLAN SET

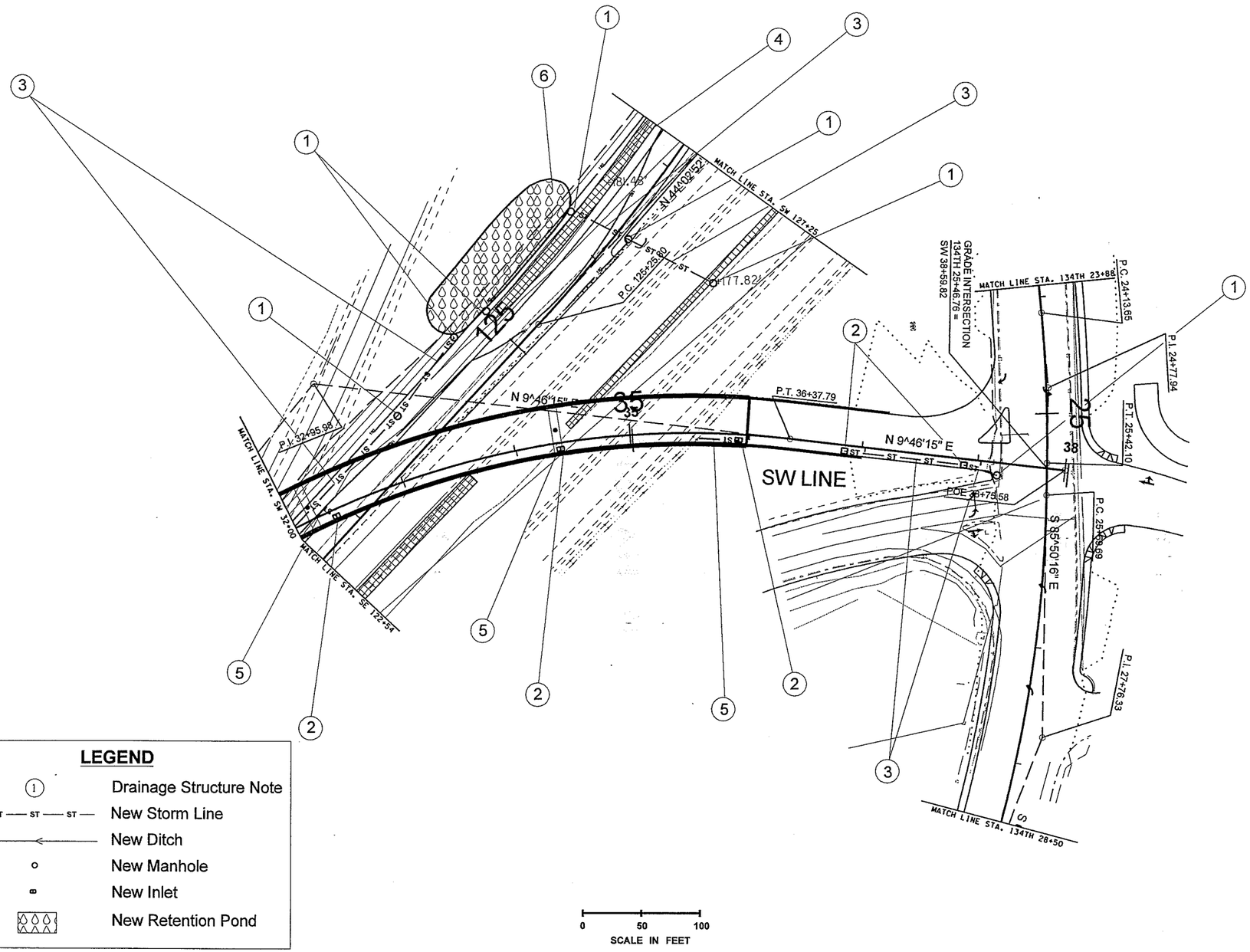

LEGEND

(1)	Drainage Structure Note
-ST — ST — ST —	New Storm Line
——<——	New Ditch
o	New Manhole
	New Inlet
	New Retention Pond

NOTES

1. Const. Manhole
2. Const. Storm Inlet
3. Const. Storm Line
4. Const. Ecol. Embankment
5. Const. Bridge Drain
6. Construct Rentention Pond

FILE NAME	x:\10592-wsdot\26692 salmon creek interchange\13-cadd\13.01-engdwgs\plans\Drainage_Utilities\L2135_PS_DR_03.dgn						
TIME	12:23:52 PM				REGION NO. 10	STATE WASH	FED.AID PROJ.NO. XL2135
DATE	8/30/2005						
PLOTTED BY	Imerhaut				JOB NUMBER L2135		
DESIGNED BY	B. LEBLANC						
ENTERED BY	P. WAGGONER				CONTRACT NO. CONT. #		LOCATION NO. LOCATION
CHECKED BY	CHECKED						
PROJ. ENGR.	PORJ. ENG.						
REGIONAL ADM.	REGIONAL ADM	REVISION	DATE	BY			

DATE
P.E. STAMP BOX

BRANDON E. LEBLANC
STATE OF WASHINGTON
REGISTERED PROFESSIONAL ENGINEER
EXPIRES APR. 29, 2006
DATE
P.E. STAMP BOX

Washington State Department of Transportation

SALMON CREEK
134th INTERCHANGE
CLARK COUNTY

STORMWATER DRAINAGE PLAN

PLOT1
3
SHEET 3 OF 4 SHEETS

PRELIMINARY PLAN SET

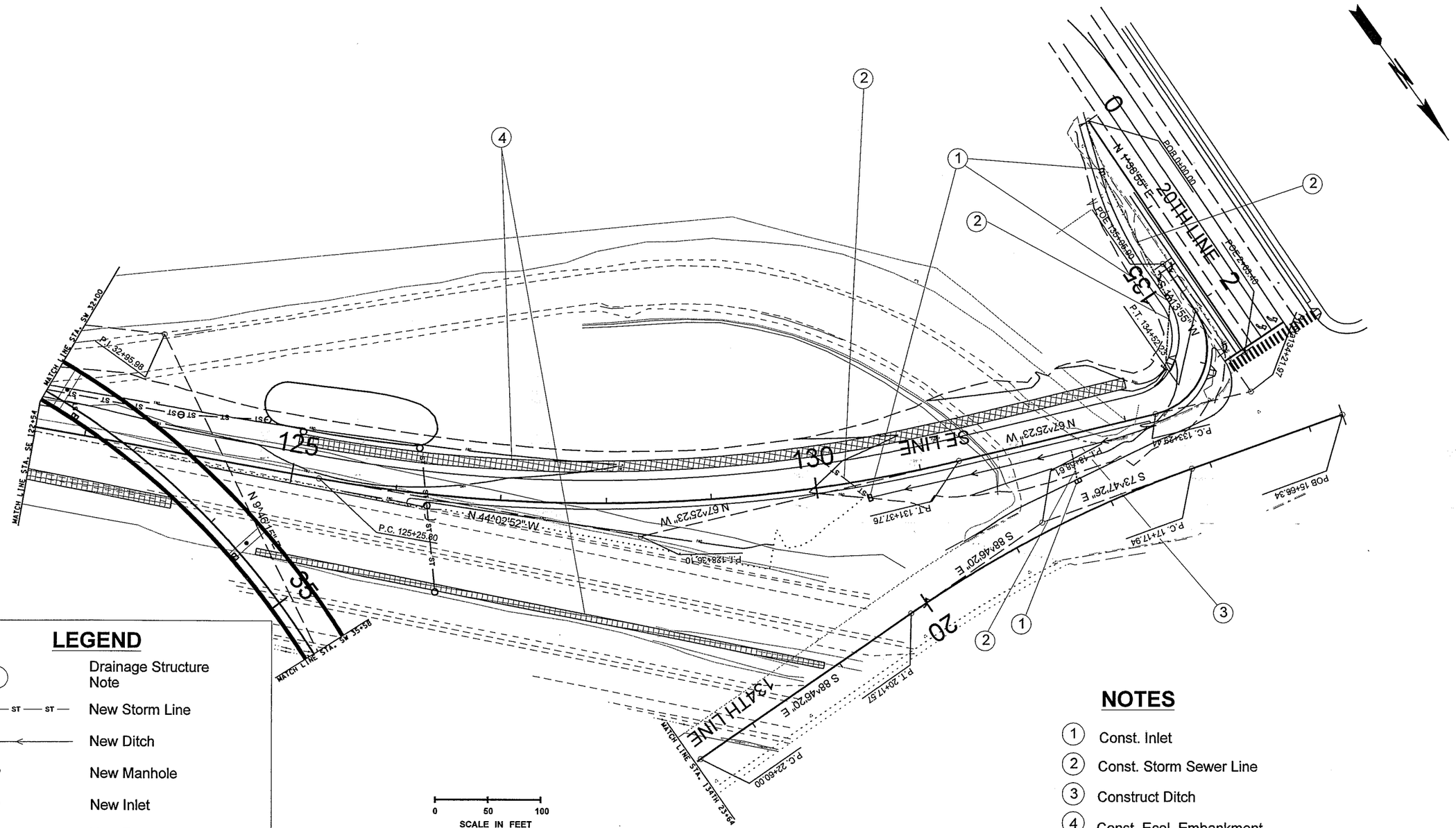

LEGEND

(1)	Drainage Structure Note
-ST — ST — ST — ST—	New Storm Line
←——←——	New Ditch
○	New Manhole
▣	New Inlet
▨	New Ecol. Embankment

NOTES

1. Const. Inlet
2. Const. Storm Sewer Line
3. Construct Ditch
4. Const. Ecol. Embankment

FILE NAME	x:\10592-wsdot\26692 salmon creek interchange\13-cadd\13.01-engdwgs\plans\Drainage_Utilities\L2135_PS_DR_04.dgn						
TIME	12:23:55 PM						
DATE	8/30/2005						
PLOTTED BY	Imerhaut						
DESIGNED BY	B. LEBLANC						
ENTERED BY	P. WAGGONER						
CHECKED BY	CHECKED						
PROJ. ENGR.	PORJ. ENG.						
REGIONAL ADM.	REGIONAL ADM	REVISION	DATE	BY			

REGION NO.	STATE	FED. AID PROJ. NO.
10	WASH	XL2135
JOB NUMBER		
L2135		
CONTRACT NO.		LOCATION NO.
CONT. #		LOCATION

DATE
P.E. STAMP BOX

BRANDON E. LEBLANC
STATE OF WASHINGTON
40615
REGISTERED
PROFESSIONAL ENGINEER
EXPIRES APR. 29, 2006
DATE
P.E. STAMP BOX

Washington State Department of Transportation

SALMON CREEK
134th INTERCHANGE
CLARK COUNTY

STORMWATER DRAINAGE PLAN

PLOT1
4

SHEET 4 OF 4 SHEETS

PRELIMINARY PLAN SET

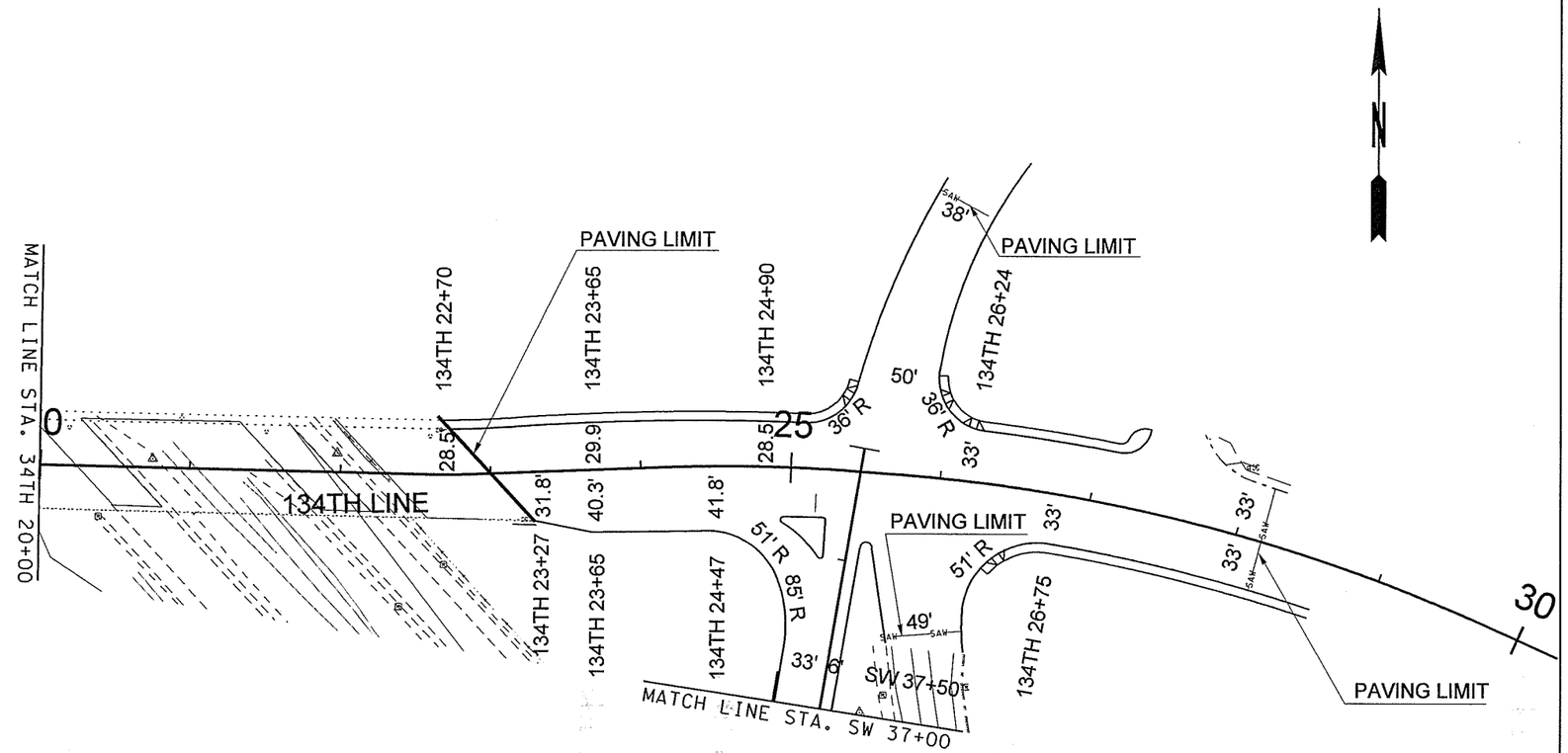

LEGEND

SAW——SAW PROPOSED SAWCUT LINE

0 100 200

SCALE IN FEET

CONSTRUCTION NOTES:

SEE ROADWAY SECTIONS FOR LANE AND SHOULDER WIDTHS, SLOPES, AND PAVING DEPTHS.

WIDTHS SHOWN ARE TO LIP OF GUTTER WHERE CURB AND GUTTER IS TO BE CONSTRUCTED.

WIDTHS SHOWN ARE TO FACE OF BARRIER WHERE GUARDRAIL IS TO BE CONSTRUCTED

FILE NAME	x:\10592-wsdot\26692 salmon creek interchange\13-cadd\13.01-engdwgs\plans\Paving\L2135_PS_PV_01.dgn				REGION NO.	STATE	FED.AID PROJ.NO.
TIME	12:24:19 PM				10	WASH	
DATE	8/30/2005				JOB NUMBER		XL2135
PLOTTED BY	lmerhaut				L2135		
DESIGNED BY	B. LEBLANC				CONTRACT NO.		LOCATION NO.
ENTERED BY	P. WAGGONER						
CHECKED BY	CHECKED						
PROJ. ENGR.	PORJ. ENG.						
REGIONAL ADM.	REGIONAL ADM	REVISION	DATE	BY			

P.E. STAMP BOX DATE

BRANDON E. LeBLANC STATE OF WASHINGTON 40152 REGISTERED PROFESSIONAL ENGINEER
EXPIRES APR. 29, 2006
P.E. STAMP BOX DATE

Washington State Department of Transportation

SALMON CREEK
134th INTERCHANGE
CLARK COUNTY

PAVING PLAN

PLOT1
P1
SHEET 1 OF 6 SHEETS

PRELIMINARY PLAN SET

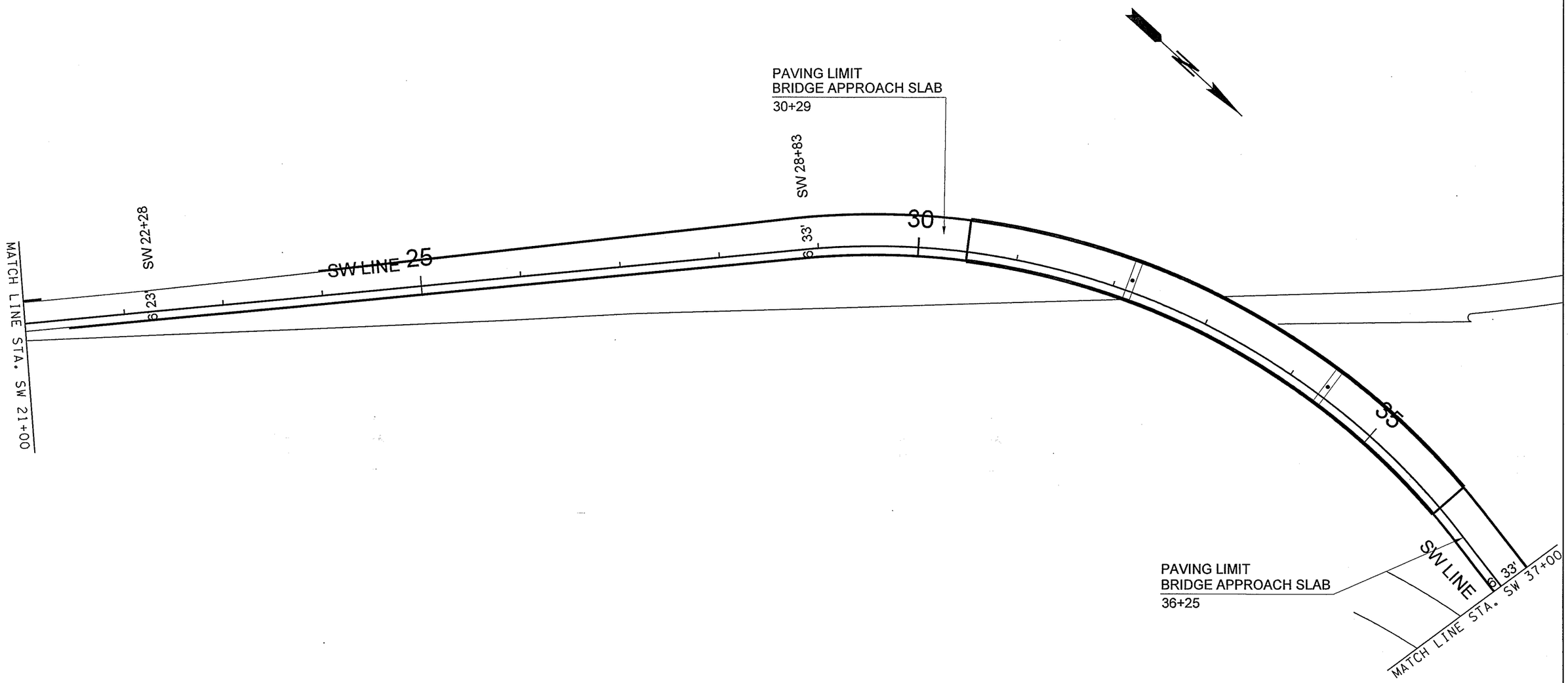

CONSTRUCTION NOTES:

SEE ROADWAY SECTIONS FOR LANE AND SHOULDER WIDTHS, SLOPES, AND PAVING DEPTHS.

WIDTHS SHOWN ARE TO LIP OF GUTTER WHERE CURB AND GUTTER IS TO BE CONSTRUCTED.

WIDTHS SHOWN ARE TO FACE OF BARRIER WHERE GUARDRAIL IS TO BE CONSTRUCTED

LEGEND

-SAW——SAW PROPOSED SAWCUT LINE

0 100 200

SCALE IN FEET

FILE NAME	x:\10592-wsdot\26692 salmon creek interchange\13-cadd\13.01-engdwgs\plans\Paving\L2135_PS_PV_02.dgn
TIME	12:24:22 PM
DATE	8/30/2005
PLOTTED BY	Imerhaut
DESIGNED BY	B. LEBLANC
ENTERED BY	P. WAGGONER
CHECKED BY	CHECKED
PROJ. ENGR.	PORJ. ENG.
REGIONAL ADM.	REGIONAL ADM

REVISION	DATE	BY

REGION NO.	STATE	FED. AID PROJ. NO.
10	WASH	XL2135
JOB NUMBER L2135		
CONTRACT NO.		LOCATION NO.

DATE
P.E. STAMP BOX

BRENDAN E. LEBLANC
STATE OF WASHINGTON
40081
REGISTERED PROFESSIONAL ENGINEER
EXPIRES APR. 29, 2006
DATE
P.E. STAMP BOX

Washington State Department of Transportation

SALMON CREEK
134th INTERCHANGE
CLARK COUNTY

PAVING PLAN

PLOT1
P2
SHEET 2 OF 6 SHEETS

PRELIMINARY PLAN SET

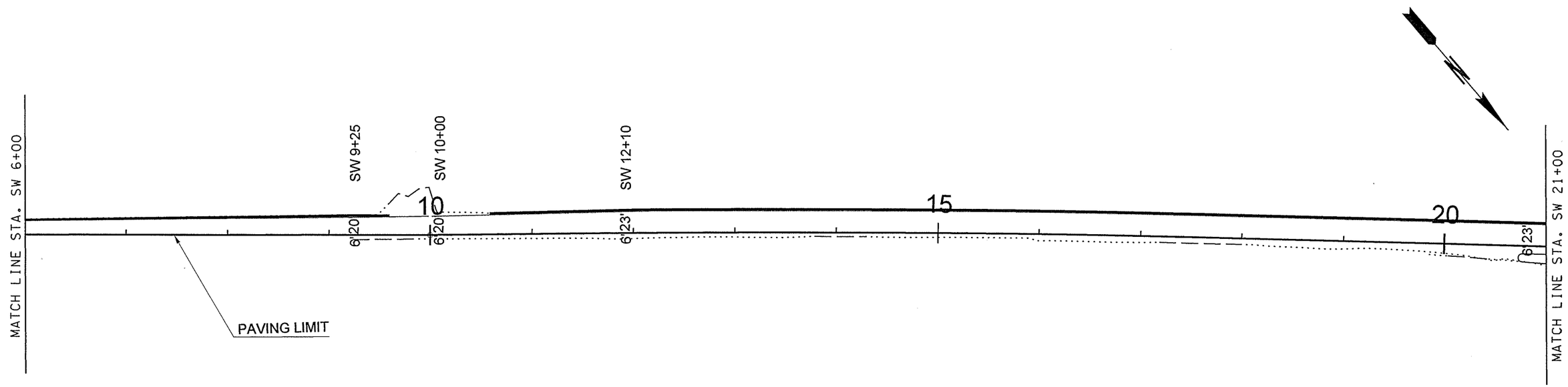

LEGEND

-SAW——SAW PROPOSED SAWCUT LINE

0 100 200

SCALE IN FEET

CONSTRUCTION NOTES:

SEE ROADWAY SECTIONS FOR LANE AND SHOULDER WIDTHS, SLOPES, AND PAVING DEPTHS.

WIDTHS SHOWN ARE TO LIP OF GUTTER WHERE CURB AND GUTTER IS TO BE CONSTRUCTED.

WIDTHS SHOWN ARE TO FACE OF BARRIER WHERE GUARDRAIL IS TO BE CONSTRUCTED

FILE NAME	x:\10592-wsdot\26692 salmon creek interchange\13-cadd\13.01-engdwgs\plans\Paving\L2135_PS_PV_03.dgn				REGION NO. 10	STATE WASH	FED. AID PROJ. NO. XL2135
TIME	12:24:24 PM				JOB NUMBER L2135		
DATE	8/30/2005				CONTRACT NO.		LOCATION NO.
PLOTTED BY	Imerhaut						
DESIGNED BY	B. LEBLANC						
ENTERED BY	P. WAGGONER						
CHECKED BY	CHECKED						
PROJ. ENGR.	PORJ. ENG.						
REGIONAL ADM.	REGIONAL ADM	REVISION	DATE	BY			

DATE
P.E. STAMP BOX

BRANDAN E. LeBLANC
STATE OF WASHINGTON
40082
REGISTERED
PROFESSIONAL ENGINEER
EXPIRES APR. 29, 2006
DATE
P.E. STAMP BOX

Washington State Department of Transportation

SALMON CREEK
134th INTERCHANGE
CLARK COUNTY

PAVING PLAN

PLOT1
P3
SHEET 3 OF 6 SHEETS

PRELIMINARY PLAN SET

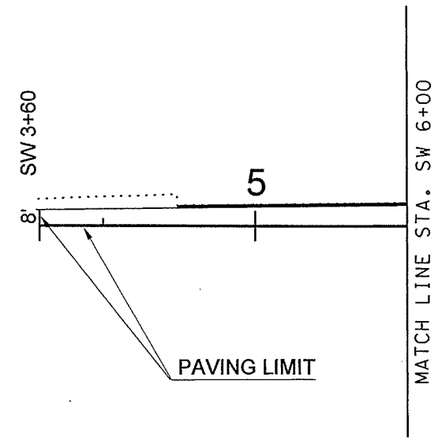

LEGEND

-SAW——SAW PROPOSED SAWCUT LINE

0 100 200

SCALE IN FEET

CONSTRUCTION NOTES:

SEE ROADWAY SECTIONS FOR LANE AND SHOULDER WIDTHS, SLOPES, AND PAVING DEPTHS.

WIDTHS SHOWN ARE TO LIP OF GUTTER WHERE CURB AND GUTTER IS TO BE CONSTRUCTED.

WIDTHS SHOWN ARE TO FACE OF BARRIER WHERE GUARDRAIL IS TO BE CONSTRUCTED

FILE NAME	x:\10592-wsdot\26692 salmon creek interchange\13-cadd\13.01-engdwgs\plans\Paving\L2135_PS_PV_04.dgn				REGION NO.	STATE	FED.AID PROJ.NO.
TIME	12:24:27 PM				10	WASH	XL2135
DATE	8/30/2005				JOB NUMBER		
PLOTTED BY	lmerhaut				L2135		
DESIGNED BY	B. LEBLANC				CONTRACT NO.		LOCATION NO.
ENTERED BY	P. WAGGONER						
CHECKED BY	CHECKED						
PROJ. ENGR.	PORJ. ENG.						
REGIONAL ADM.	REGIONAL ADM	REVISION	DATE	BY			

DATE
P.E. STAMP BOX

BRENDAN E. LEBLANC
STATE OF WASHINGTON
REGISTERED PROFESSIONAL ENGINEER
EXPIRES APR. 29, 2006
DATE
P.E. STAMP BOX

Washington State Department of Transportation

SALMON CREEK
134th INTERCHANGE
CLARK COUNTY

PAVING PLAN

PLOT1
P4
SHEET 4 OF 6 SHEETS

PRELIMINARY PLAN SET

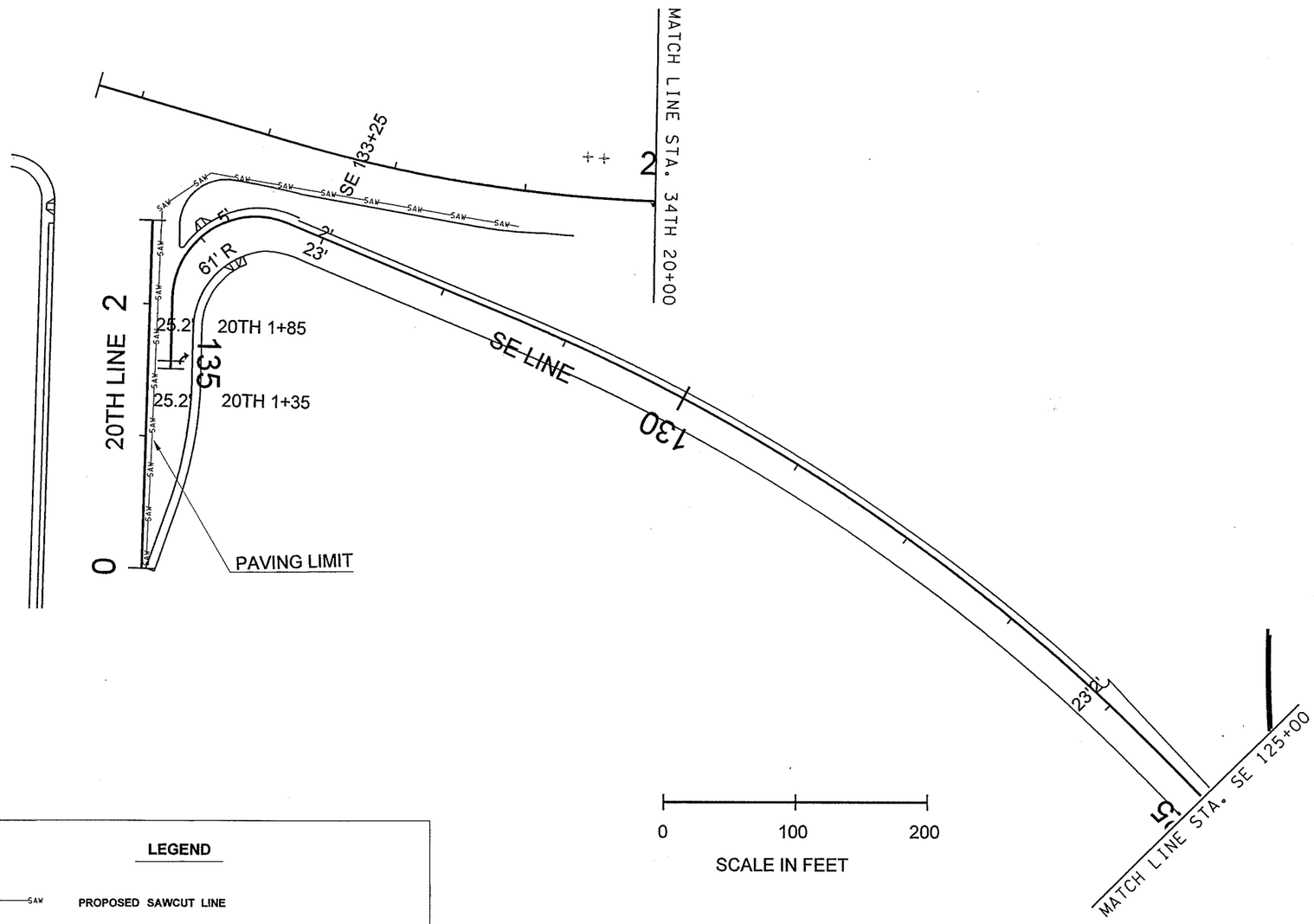

LEGEND

-SAW——SAW PROPOSED SAWCUT LINE

CONSTRUCTION NOTES:

SEE ROADWAY SECTIONS FOR LANE AND SHOULDER WIDTHS, SLOPES, AND PAVING DEPTHS.

WIDTHS SHOWN ARE TO LIP OF GUTTER WHERE CURB AND GUTTER IS TO BE CONSTRUCTED.

WIDTHS SHOWN ARE TO FACE OF BARRIER WHERE GUARDRAIL IS TO BE CONSTRUCTED

FILE NAME	x:\10592-wsdot\26692 salmon creek interchange\13-cadd\13.01-engdwgs\plans\Paving\L2135_PS_PV_05.dgn				REGION NO.	STATE	FED.AID PROJ.NO.
TIME	12:24:30 PM				10	WASH	XL2135
DATE	8/30/2005				JOB NUMBER		
PLOTTED BY	lmerhout				L2135		
DESIGNED BY	B. LEBLANC				CONTRACT NO.		LOCATION NO.
ENTERED BY	P. WAGGONER						
CHECKED BY	CHECKED						
PROJ. ENGR.	PORJ. ENG.						
REGIONAL ADM.	REGIONAL ADM	REVISION	DATE	BY			

DATE
P.E. STAMP BOX

BRENDAN E. LEBLANC
STATE OF WASHINGTON
REGISTERED PROFESSIONAL ENGINEER
EXPIRES APR. 29, 2006
DATE
P.E. STAMP BOX

Washington State Department of Transportation

SALMON CREEK
134th INTERCHANGE
CLARK COUNTY

PAVING PLAN

PLOT1
P5

SHEET 5 OF 6 SHEETS

PRELIMINARY PLAN SET

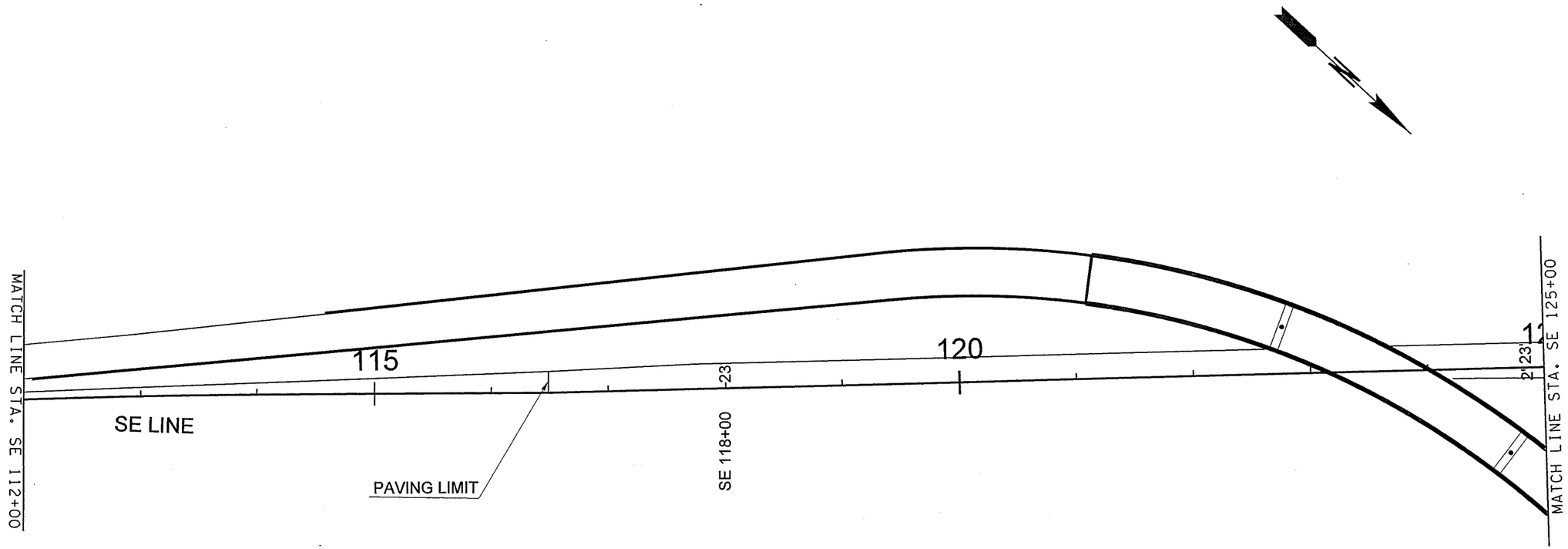

LEGEND

-SAW——SAW PROPOSED SAWCUT LINE

0 100 200

SCALE IN FEET

CONSTRUCTION NOTES:

SEE ROADWAY SECTIONS FOR LANE AND SHOULDER WIDTHS, SLOPES, AND PAVING DEPTHS.

WIDTHS SHOWN ARE TO LIP OF GUTTER WHERE CURB AND GUTTER IS TO BE CONSTRUCTED.

WIDTHS SHOWN ARE TO FACE OF BARRIER WHERE GUARDRAIL IS TO BE CONSTRUCTED

FILE NAME	x:\10592-wsdot\26692 salmon creek interchange\13-cadd\13.01-engdwgs\plans\Paving\L2135_PS_PV_06.dgn				REGION NO. 10	STATE WASH	FED.AID PROJ.NO. XL2135
TIME	12:24:33 PM				JOB NUMBER L2135		
DATE	8/30/2005				CONTRACT NO.		LOCATION NO.
PLOTTED BY	lmerhaut						
DESIGNED BY	B. LEBLANC						
ENTERED BY	P. WAGGONER						
CHECKED BY	CHECKED						
PROJ. ENGR.	PORJ. ENG.						
REGIONAL ADM.	REGIONAL ADM	REVISION	DATE	BY			

P.E. STAMP BOX DATE

BRANDON E. LeBLANC STATE OF WASHINGTON 2003 REGISTERED PROFESSIONAL ENGINEER

EXPIRES APR. 29, 2006 DATE

P.E. STAMP BOX

Washington State Department of Transportation

SALMON CREEK
134th INTERCHANGE
CLARK COUNTY

PAVING PLAN

PLOT1 P6

SHEET 6 OF 6 SHEETS

PRELIMINARY PLAN SET

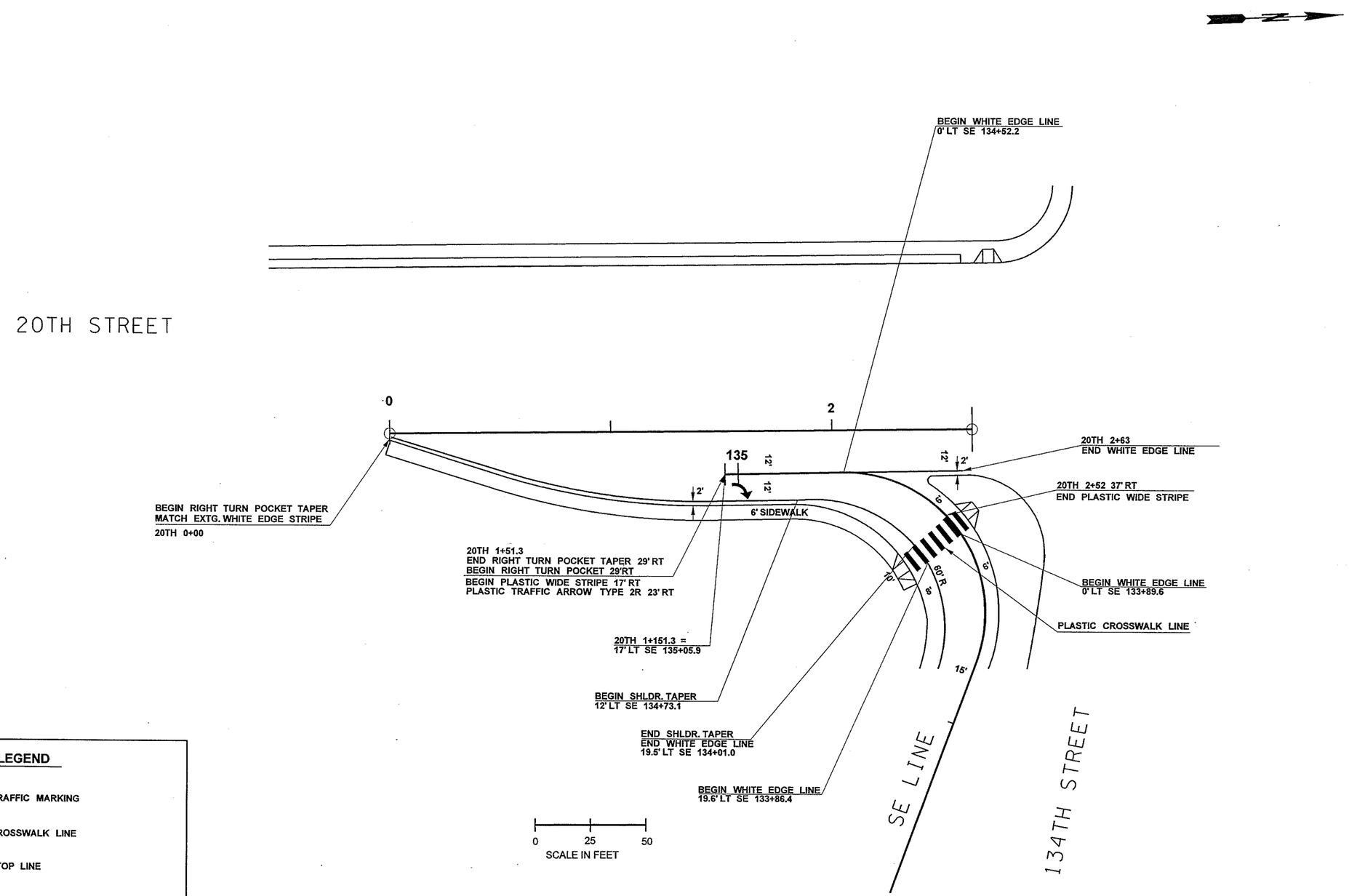

LEGEND

- PLASTIC TRAFFIC MARKING
- PLASTIC CROSSWALK LINE
- PLASTIC STOP LINE

FILE NAME	x:\10592-wsdot\26692 salmon creek interchange\13-cadd\13.01-engdwgs\plans\intersections\L2135_PS_MK_01.dgn			
TIME	12:24:12 PM			
DATE	8/30/2005			
PLOTTED BY	lmerhaut			
DESIGNED BY	B. LEBLANC			
ENTERED BY	P. WAGGONER			
CHECKED BY	CHECKED			
PROJ. ENGR.	PORJ. ENG.			
REGIONAL ADM.	REGIONAL ADM	REVISION	DATE	BY

REGION NO.	STATE	FED.AID PROJ.NO.
10	WASH	XL2135
JOB NUMBER L2135		
CONTRACT NO.		LOCATION NO.

DATE
P.E. STAMP BOX

BRENDAN E. LeBLANC
STATE OF WASHINGTON
REGISTERED PROFESSIONAL ENGINEER
EXPIRES APR. 29, 2006
DATE
P.E. STAMP BOX

Washington State Department of Transportation

SALMON CREEK
134th INTERCHANGE
CLARK COUNTY

PAVEMENT MARKING PLAN

PLOT1
MK1
SHEET 1 OF 2 SHEETS

PRELIMINARY PLAN SET

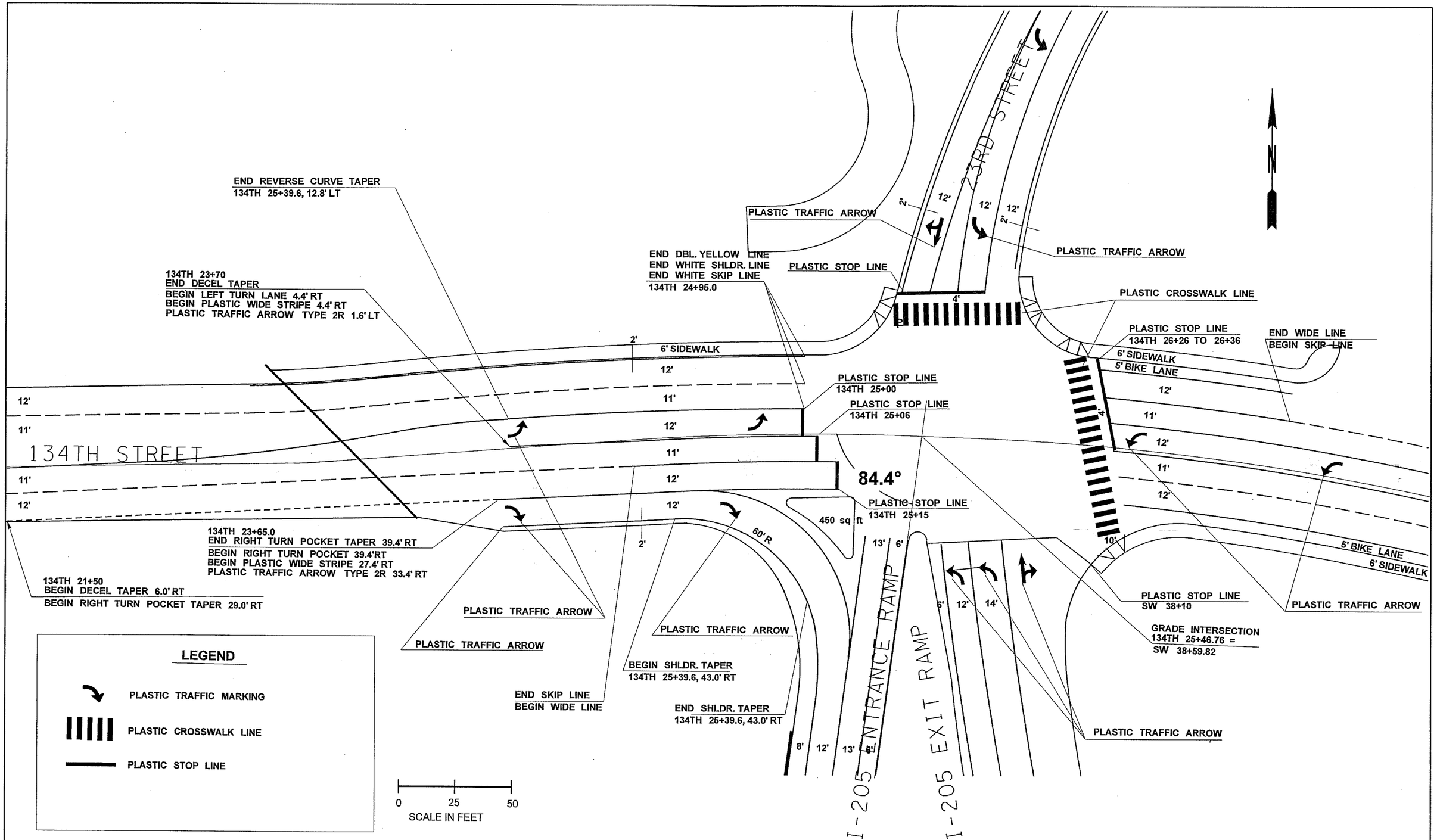

FILE NAME	x:\10592-wsdot\26692 salmon creek interchange\13-cadd\13.01-engdwgs\plans\intersections\L2135_PS_MK_02.dgn						PLOT1
TIME	12:24:16 PM				REGION NO. 10 / STATE WASH / FED.AID PROJ.NO.		MK2
DATE	8/30/2005						
PLOTTED BY	lmerhaut				JOB NUMBER XL2135		
DESIGNED BY							
ENTERED BY	B. LEBLANC						
CHECKED BY	P. WAGGONER				CONTRACT L2135	LOCATION NO.	
PROJ. ENGR.	CHECKED						
REGIONAL ADM.	PORJ. ENG.	REVISION	DATE	BY			

P.E. STAMP BOX DATE

BRENDAN E. LeBLANC STATE OF WASHINGTON REGISTERED PROFESSIONAL ENGINEER 40963 EXPIRES APR. 29, 2006 P.E. STAMP BOX DATE

Washington State Department of Transportation

SALMON CREEK
134th INTERCHANGE
CLARK COUNTY

PAVEMENT MARKING PLAN

SHEET 2 OF 2 SHEETS

PRELIMINARY PLAN SET

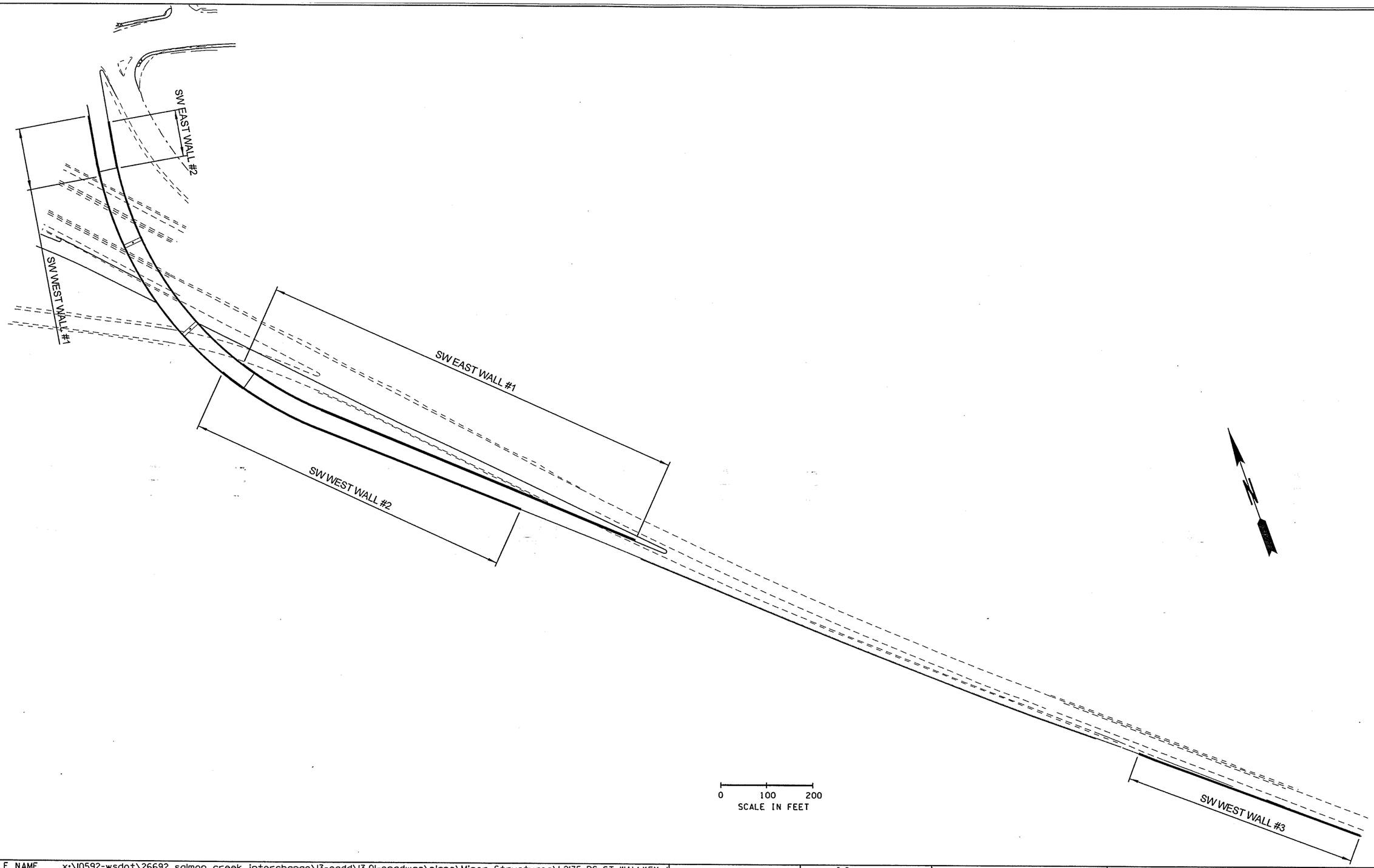

FILE NAME	x:\10592-wsdot\26692 salmon creek interchange\13-cadd\13.01-engdwgs\plans\Minor Structures\L2135_PS_ST_WALLKEY.dgn
TIME	1:42:34 PM
DATE	8/30/2005
PLOTTED BY	lmerhaut
DESIGNED BY	B. LEBLANC
ENTERED BY	P. WAGGONER
CHECKED BY	CHECKED
PROJ. ENGR.	PORJ. ENG.
REGIONAL ADM.	REGIONAL ADM

REVISION	DATE	BY

REGION NO.	STATE	FED.AID PROJ.NO.
10	WASH	L2135
JOB NUMBER L2135		
CONTRACT NO. CONT. #		LOCATION NO. LOCATION

P.E. STAMP BOX DATE

BRANDAN E. LEBLANC STATE OF WASHINGTON REGISTERED PROFESSIONAL ENGINEER
EXPIRES APR. 29, 2006
P.E. STAMP BOX DATE

Washington State Department of Transportation

SALMON CREEK
134th INTERCHANGE

RETAINING WALL KEY MAP

PLOT1

SHEET 1 OF 8 SHEETS

PRELIMINARY PLAN SET

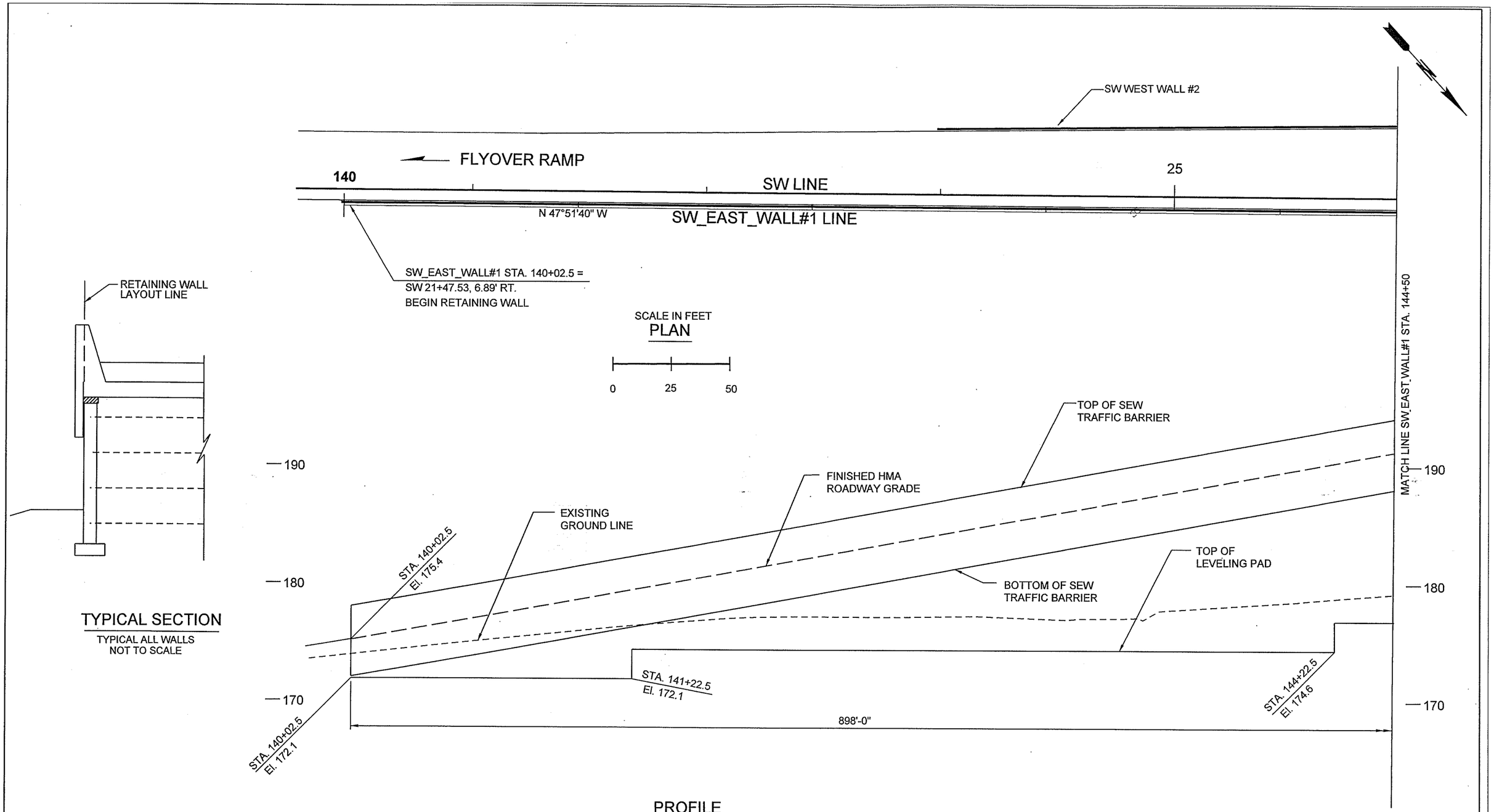

FILE NAME	x:\10592-wsdot\26692 salmon creek interchange\13-cadd\13.01-engdwgs\plans\Minor Structures\L2135_PS_ST_SE#1a.dgn						
TIME	1:42:37 PM						
DATE	8/30/2005						
PLOTTED BY	Imerhaut						
DESIGNED BY	B. LEBLANC						
ENTERED BY	P. WAGGONER						
CHECKED BY	CHECKED						
PROJ. ENGR.	PORJ. ENG.						
REGIONAL ADM.	REGIONAL ADM	REVISION	DATE	BY			

REGION NO.	STATE	FED. AID PROJ. NO.
10	WASH	L2135
JOB NUMBER L2135		
CONTRACT NO. CONT. #		LOCATION NO. LOCATION

P.E. STAMP BOX DATE

BRENDAN E. LeBLANC STATE OF WASHINGTON 40363 REGISTERED PROFESSIONAL ENGINEER
EXPIRES APR. 29, 2006
P.E. STAMP BOX DATE

Washington State Department of Transportation

SALMON CREEK
134th INTERCHANGE
SW_EAST_WALL#1

RETAINING WALL PLAN AND PROFILE

PLOT1
SE#1a

SHEET 2 OF 8 SHEETS

PRELIMINARY PLAN SET

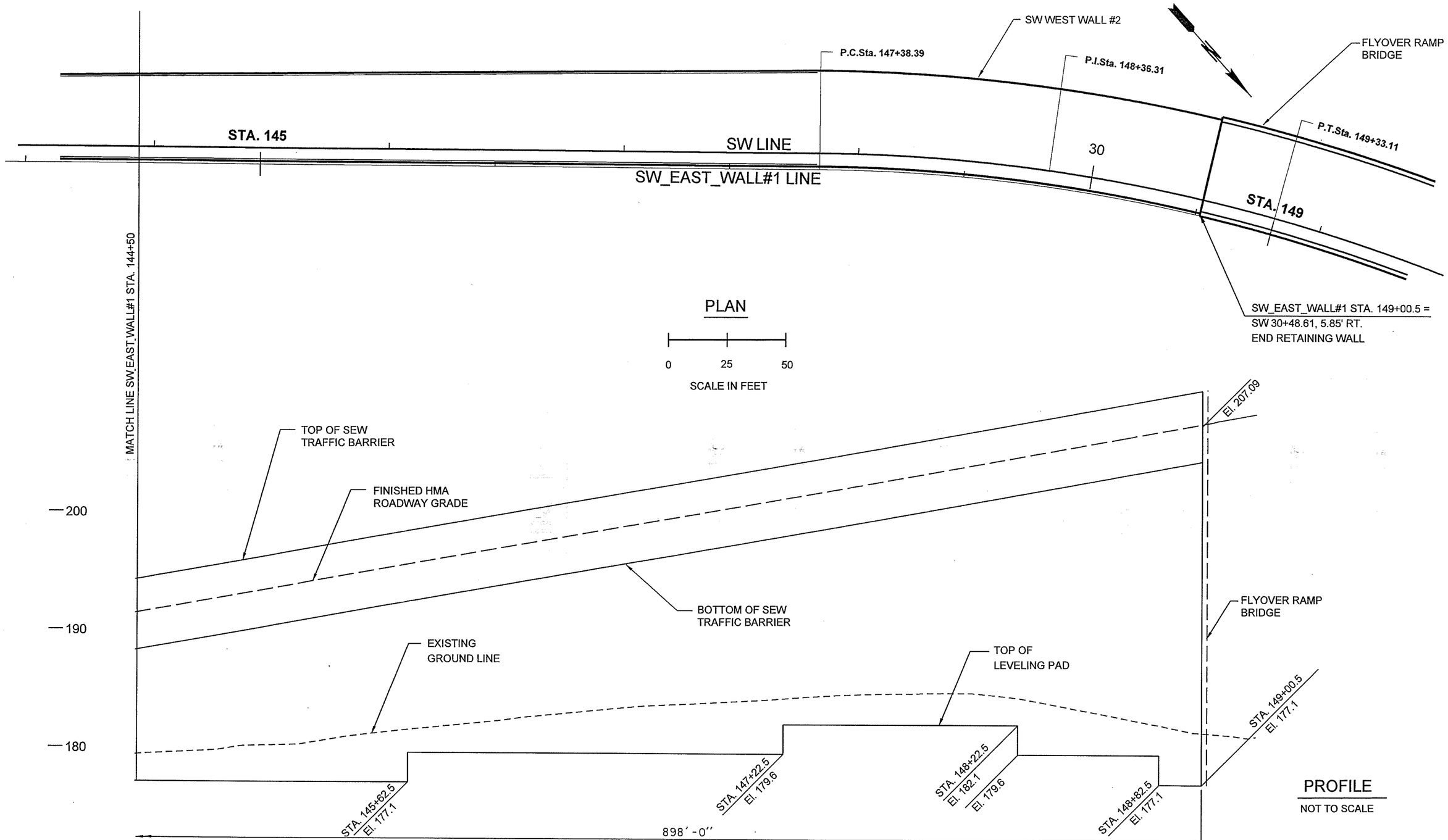

FILE NAME	x:\10592-wsdot\26692 salmon creek interchange\13-cadd\13.01-engdwgs\plans\Minor Structures\L2135_PS_ST_SE#1b.dgn
TIME	1:42:39 PM
DATE	8/30/2005
PLOTTED BY	lmerhaut
DESIGNED BY	B. LEBLANC
ENTERED BY	P. WAGGONER
CHECKED BY	CHECKED
PROJ. ENGR.	PORJ. ENG.
REGIONAL ADM.	REGIONAL ADM

REVISION | DATE | BY

REGION NO.	STATE	FED.AID PROJ.NO.
10	WASH	L2135
JOB NUMBER L2135		
CONTRACT NO. CONT. #		LOCATION NO. LOCATION

P.E. STAMP BOX DATE

BRENDAN E. LEBLANC STATE OF WASHINGTON 20080 REGISTERED PROFESSIONAL ENGINEER EXPIRES APR. 29, 2006

P.E. STAMP BOX DATE

Washington State Department of Transportation

SALMON CREEK
134th INTERCHANGE
SW_EAST_WALL#1

RETAINING WALL PLAN AND PROFILE

PLOT1

SE#1b

SHEET 3 OF 8 SHEETS

PRELIMINARY PLAN SET

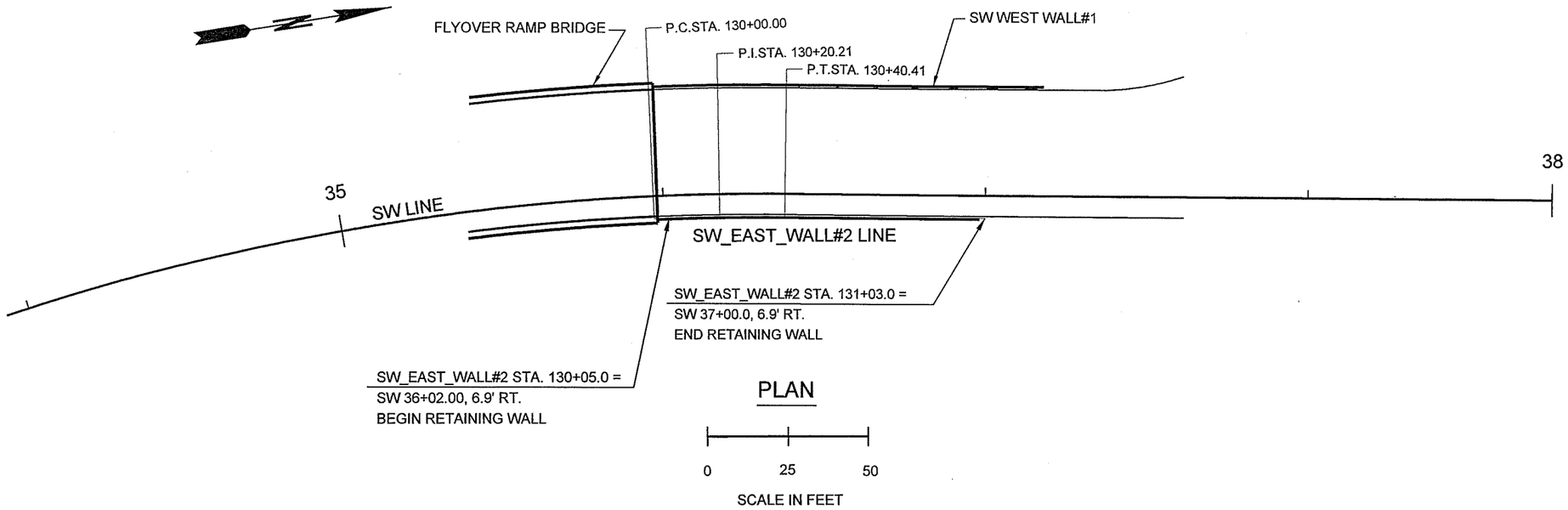

PLAN

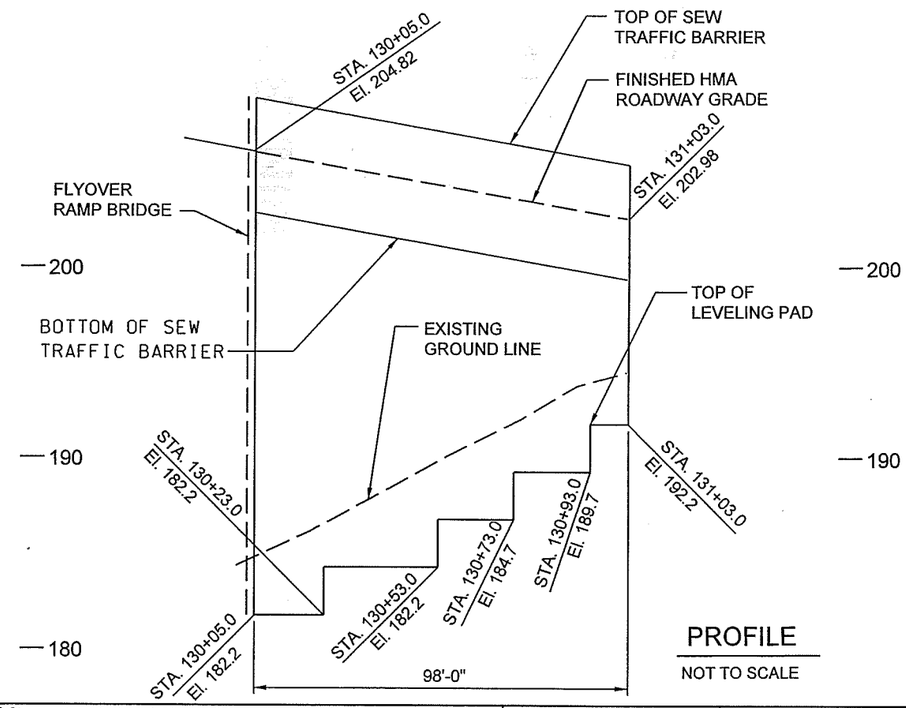

PROFILE

NOT TO SCALE

FILE NAME	x:\10592-wsdot\26692 salmon creek interchange\13-cadd\13.01-engdwgs\plans\Minor Structures\L2135_PS_ST_SE#2.dgn						
TIME	1:42:42 PM				REGION NO. 10	STATE WASH	FED.AID PROJ.NO. L2STA. 135
DATE	8/30/2005						
PLOTTED BY	Imerhaut				JOB NUMBER L2STA. 135		
DESIGNED BY	B. LEBLANC						
ENTERED BY	P. WAGGONER						
CHECKED BY	CHECKED				CONTRACT NO. CONT. #		LOCATION NO. LOCATION
PROJ. ENGR.	PORJ. ENG.						
REGIONAL ADM.	REGIONAL ADM	REVISION	DATE	BY			

P.E. STAMP BOX DATE

BRENDAN E. LeBLANC STATE OF WASHINGTON 30187 REGISTERED PROFESSIONAL ENGINEER
EXPIRES APR. 29, 2006
P.E. STAMP BOX DATE

Washington State Department of Transportation

SALMON CREEK
STA. 134th INTERCHANGE
SW_EAST_WALL#2

RETAINING WALL PLAN AND PROFILE

PLOT1

SE#2

SHEET 4 OF 8 SHEETS

PRELIMINARY PLAN SET

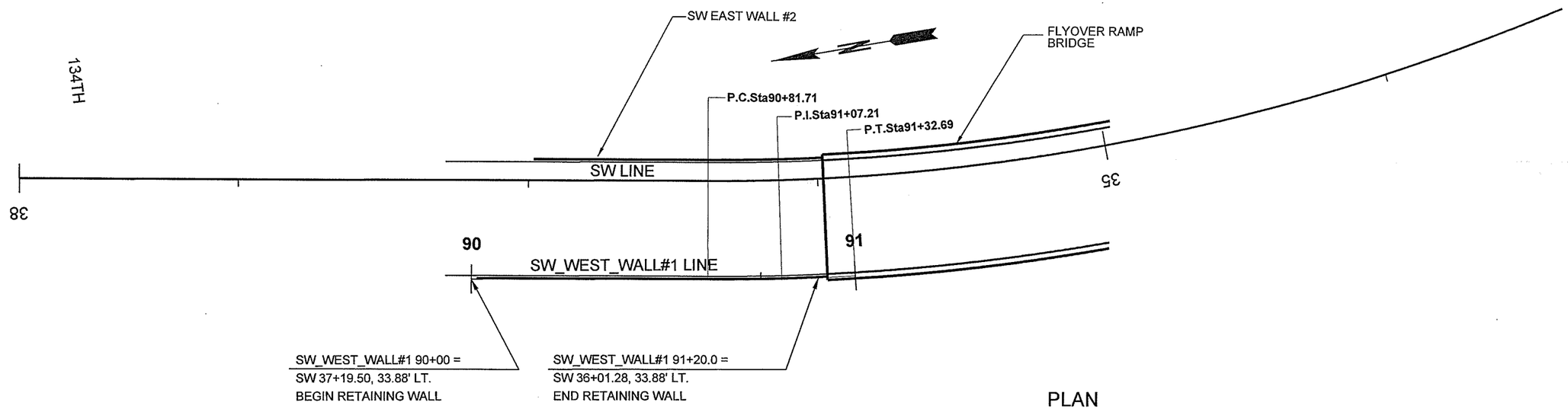

PLAN

0 25 50

SCALE IN FEET

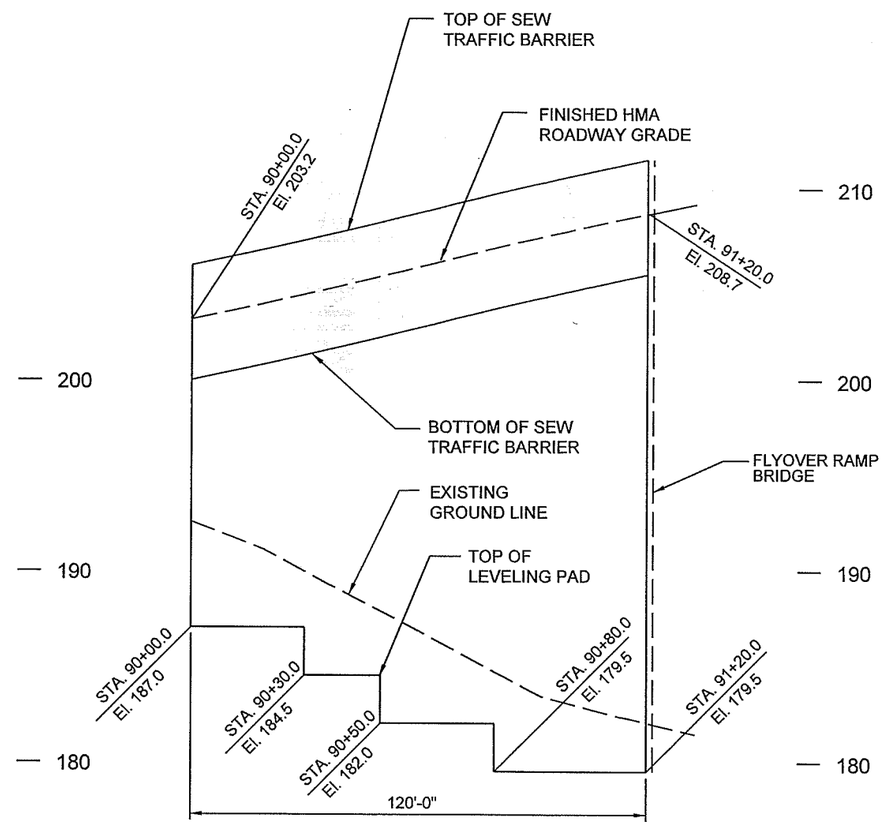

PROFILE

NOT TO SCALE

FILE NAME	x:\10592-wsdot\26692 salmon creek interchange\13-cadd\13.01-engdwgs\plans\Minor Structures\L2135_PS_ST_SW#1.dgn						
TIME	1:42:45 PM						
DATE	8/30/2005						
PLOTTED BY	lmerhaut						
DESIGNED BY	B. LEBLANC						
ENTERED BY	P. WAGGONER						
CHECKED BY	CHECKED						
PROJ. ENGR.	PORJ. ENG.						
REGIONAL ADM.	REGIONAL ADM	REVISION	DATE	BY			

REGION NO.	STATE	FED. AID PROJ. NO.
10	WASH	L2135
JOB NUMBER L2135		
CONTRACT NO. CONT. #		LOCATION NO. LOCATION

DATE
P.E. STAMP BOX

BRENDAN E. LeBLANC
STATE OF WASHINGTON
40063
REGISTERED PROFESSIONAL ENGINEER
EXPIRES APR. 29, 2006

DATE
P.E. STAMP BOX

Washington State Department of Transportation

SALMON CREEK
134th INTERCHANGE
SW_WEST_WALL#1

RETAINING WALL PLAN AND PROFILE

PLOT1
SW#1
SHEET 5 OF 8 SHEETS

PRELIMINARY PLAN SET

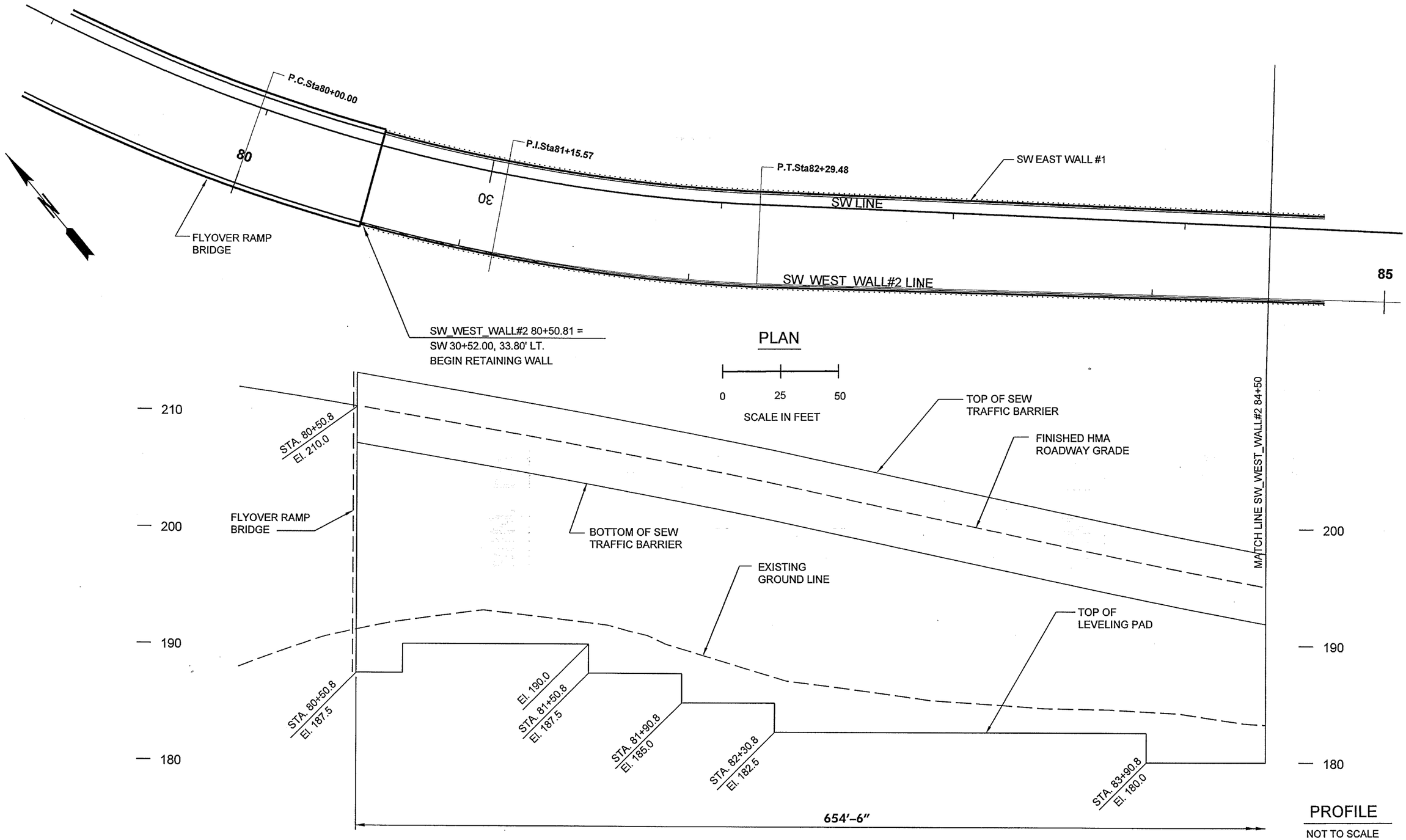

FILE NAME	x:\10592-wsdot\26692 salmon creek interchange\13-cadd\13.01-engdwgs\plans\Minor Structures\L2135_PS_ST_SW#2a.dgn						
TIME	1:42:48 PM						
DATE	8/30/2005						
PLOTTED BY	lmerhaut						
DESIGNED BY	B. LEBLANC						
ENTERED BY	P. WAGGONER						
CHECKED BY	CHECKED						
PROJ. ENGR.	PORJ. ENG.						
REGIONAL ADM.	REGIONAL ADM	REVISION	DATE	BY			

REGION NO.	STATE	FED.AID PROJ.NO.
10	WASH	L2135
JOB NUMBER L2135		
CONTRACT NO. CONT. #		LOCATION NO. LOCATION

P.E. STAMP BOX DATE

BRENDAN E. LeBLANC STATE OF WASHINGTON 40863 REGISTERED PROFESSIONAL ENGINEER
EXPIRES APR. 29, 2006
P.E. STAMP BOX DATE

Washington State Department of Transportation

SALMON CREEK
134th INTERCHANGE
SW_WEST_WALL#2

RETAINING WALL PLAN AND PROFILE

PLOT1
SW#2a
SHEET 6 OF 8 SHEETS

PRELIMINARY PLAN SET

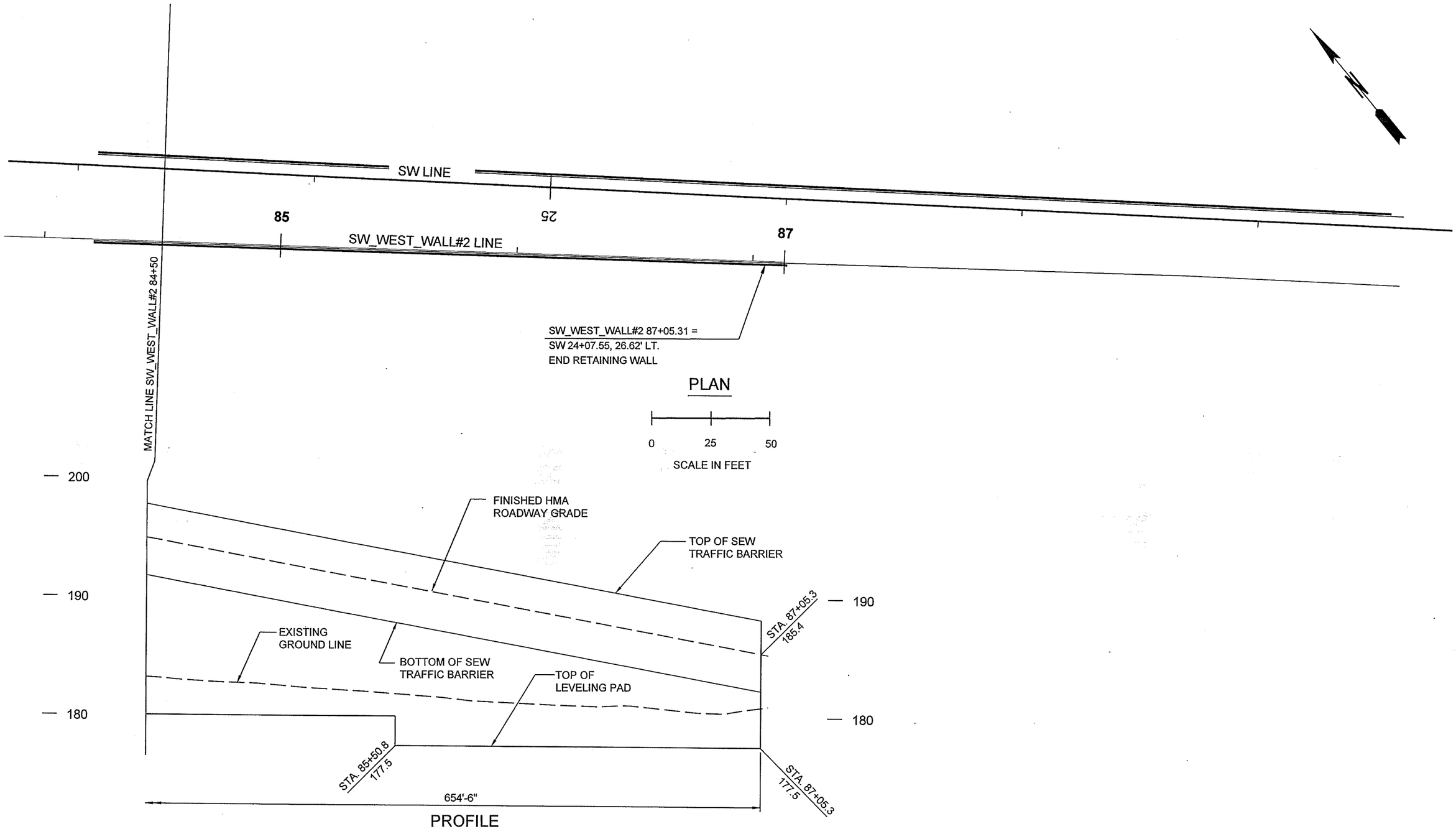

FILE NAME	x:\10592-wsdot\26692 salmon creek interchange\13-cadd\13.01-engdwgs\plans\Minor Structures\L2135_PS_ST_SW#2b.dgn						
TIME	1:42:51 PM						
DATE	8/30/2005						
PLOTTED BY	lmerhaut						
DESIGNED BY	B. LEBLANC						
ENTERED BY	P. WAGGONER						
CHECKED BY	CHECKED						
PROJ. ENGR.	PORJ. ENG.						
REGIONAL ADM.	REGIONAL ADM	REVISION	DATE	BY			

REGION NO.	STATE	FED.AID PROJ.NO.
10	WASH	L2135
JOB NUMBER L2135		
CONTRACT NO. CONT. #		LOCATION NO. LOCATION

P.E. STAMP BOX DATE

BRENDAN B. LeBLANC STATE OF WASHINGTON REGISTERED PROFESSIONAL ENGINEER
EXPIRES APR. 29, 2006
P.E. STAMP BOX DATE

Washington State
Department of Transportation

SALMON CREEK
134th INTERCHANGE
SW_WEST_WALL#2

RETAINING WALL PLAN AND PROFILE

PLOT1
SW#2b

SHEET 7 OF 8 SHEETS

PRELIMINARY PLAN SET

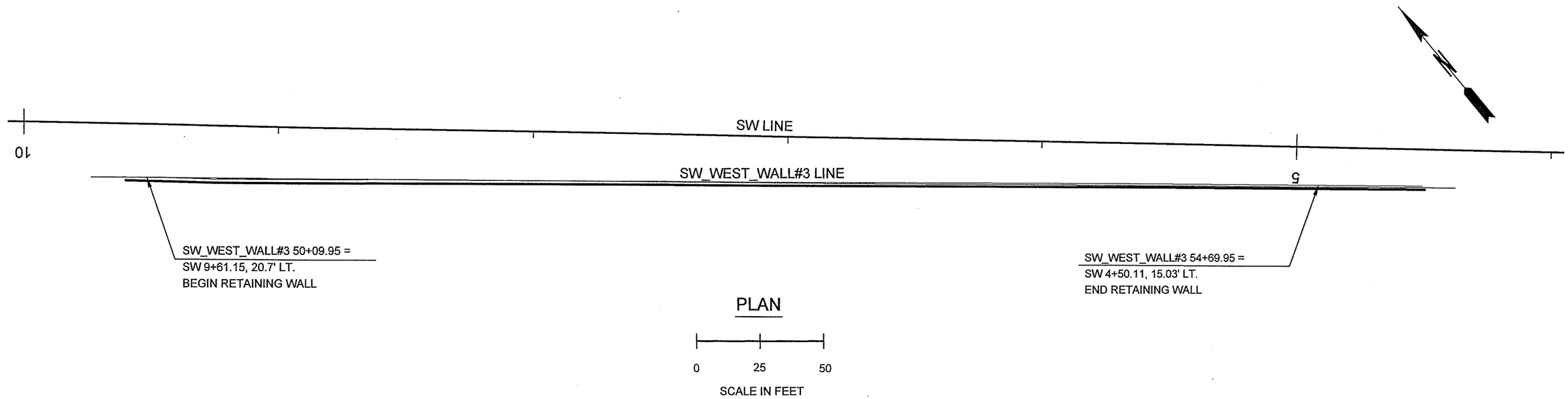

PLAN

0 25 50

SCALE IN FEET

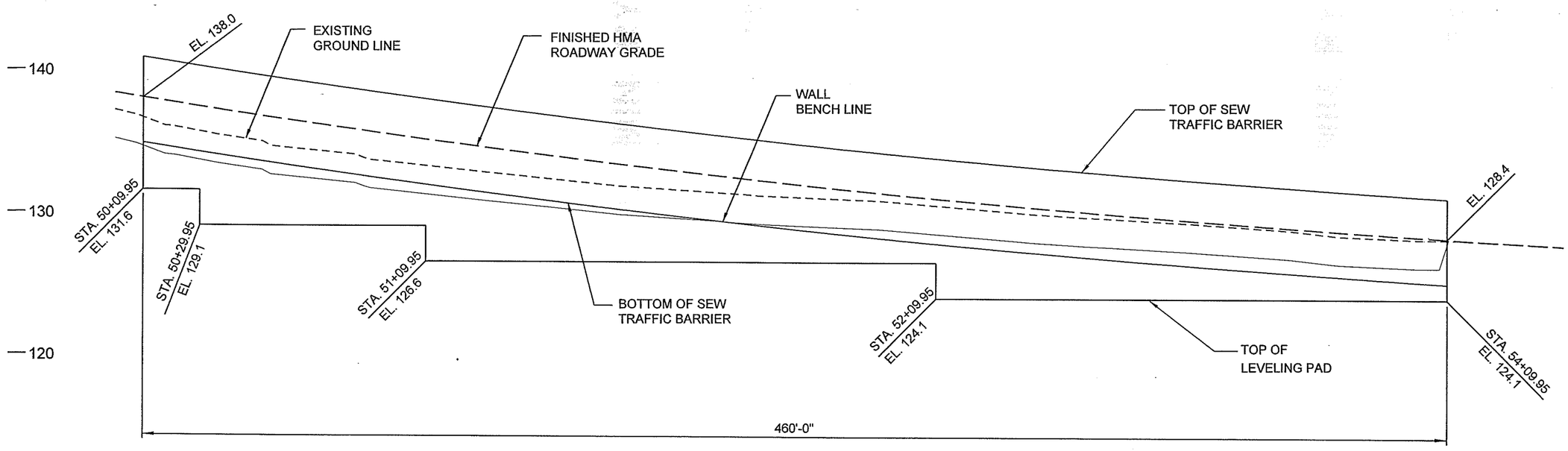

PROFILE

NOT TO SCALE

FILE NAME	x:\10592-wsdot\26692 salmon creek interchange\13-cadd\13.01-engdwgs\plans\Minor Structures\L2135_PS_ST_SW#4.dgn						
TIME	1:42:54 PM				REGION NO. 10	STATE WASH	FED. AID PROJ. NO. L2135
DATE	8/30/2005						
PLOTTED BY	lmerhaut				JOB NUMBER L2135		
DESIGNED BY	B. LEBLANC						
ENTERED BY	P. WAGGONER				CONTRACT NO. CONT. #		LOCATION NO. LOCATION
CHECKED BY	CHECKED						
PROJ. ENGR.	PORJ. ENG.						
REGIONAL ADM.	REGIONAL ADM	REVISION	DATE	BY			

P.E. STAMP BOX DATE

BRENDAN E. LeBLANC STATE OF WASHINGTON 36183 REGISTERED PROFESSIONAL ENGINEER
EXPIRES APR. 29, 2006
P.E. STAMP BOX DATE

Washington State Department of Transportation

SALMON CREEK
134th INTERCHANGE
SW_WEST_WALL#3

RETAINING WALL PLAN AND PROFILE

PLOT1

SW#3

SHEET 8 OF 8 SHEETS

CURVE DATA					
P.I. STATION	Δ	RADIUS	TANGENT	LENGTH	BK. TANGENT BRG.
SW 32+95.98	57°37'55" RT.	750.00'	412.59'	754.40'	N 47°51'40" W

POINTS OF MIN. VERT. CLR.:
SW STA. 31+82 (1.5' RT.) = SE STA. 123+56 (31.0' LT.)
SW STA. 32+28 (1.5' RT.) = L STA. 637+78 (73' LT.)
SW STA. 33+23 (1.5' RT.) = L STA. 639+99 (93' RT.)
SW STA. 35+42 (1.5' RT.) = L STA. 639+99 (93' RT.)

BRIDGE WITH APPROACH FILLS
STRUCTURE DEPTH = 9'-0"
DECK PROTECTIVE SYSTEM 1 (EPOXY COATED REBAR)
CAST-IN-PLACE CONCRETE STRENGTH SHALL BE 4000 psi

SR ___ JOB NO. ___ SHEET ___

SEC. 26, T.3 N., R. 1 E., W.M.
CLARK COUNTY
SR-205

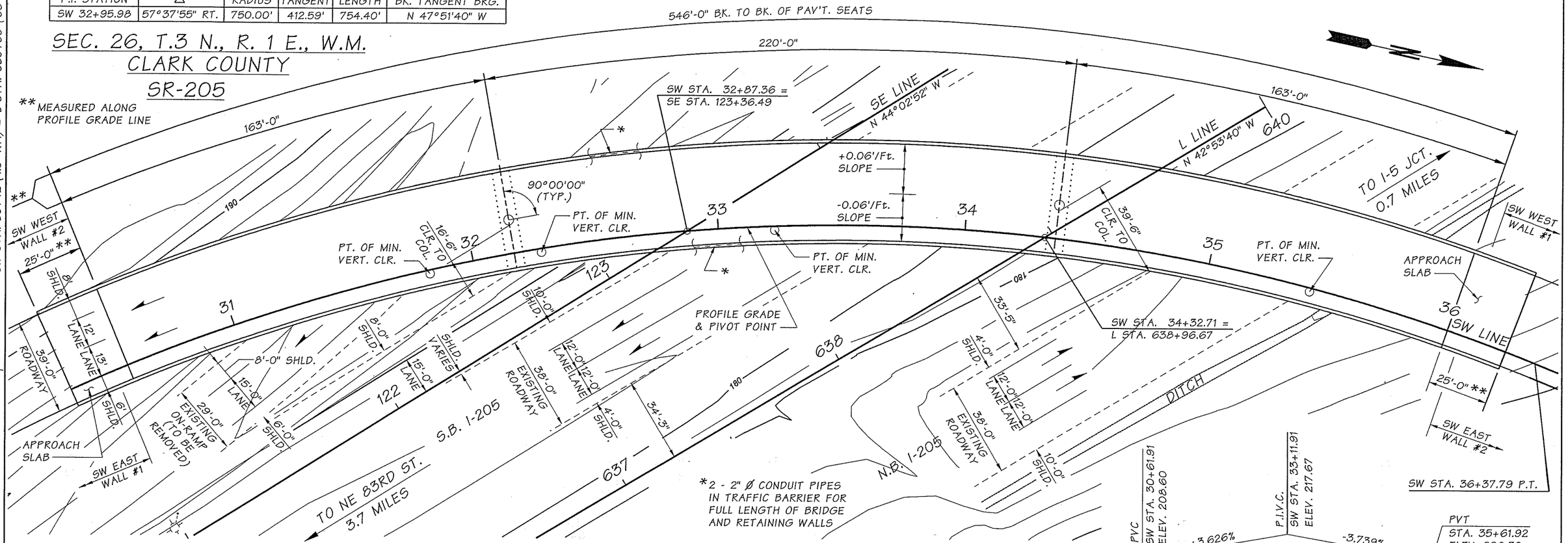

PLAN

BEARING OF ALL PIERS IS NORMAL TO SW LINE

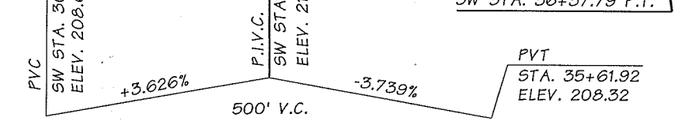

SW LINE PROFILE

PRELIMINARY PLAN SET

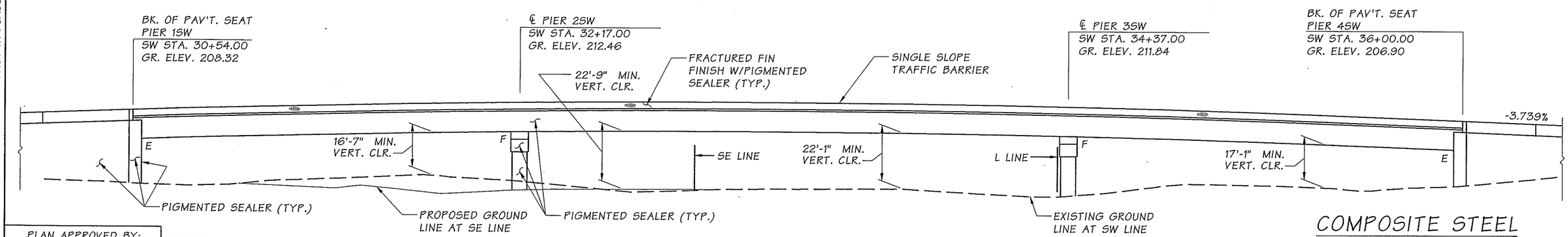

PLAN APPROVED BY:

BRIDGE & STRUCTURES ENGINEER

PROJECT DEVELOPMENT ENGINEER

DATUM

NAVD 88

ELEVATION

GRADE ELEVATIONS SHOWN ARE FINISH GRADES AT TOP OF ROADWAY SLAB ON SW LINE AND ARE EQUAL TO PROFILE GRADE.

COMPOSITE STEEL PLATE GIRDERS
LOADING: HL-93

Bridge Design Engr.				
Supervisor				
Designed By				
Checked By				
Detailed By				
Bridge Projects Engr.				
Prelim. Plan By				
Architect/Specialist	DATE	REVISION	BY	APP'D

REGION NO.	STATE	FED. AID PROJ. NO.	SHEET NO.	TOTAL SHEETS
10	WASH.			
JOB NUMBER				

NICHOLAS M. CLARK, STATE OF WASHINGTON, REGISTERED PROFESSIONAL ENGINEER
EXPIRES DEC. 16, 2005

BRIDGE AND STRUCTURES OFFICE

Washington State Department of Transportation

PRELIMINARY PLAN

BRIDGE SHEET NO. 1

SHEET ___ OF ___ SHEETS

PRELIMINARY PLAN SET

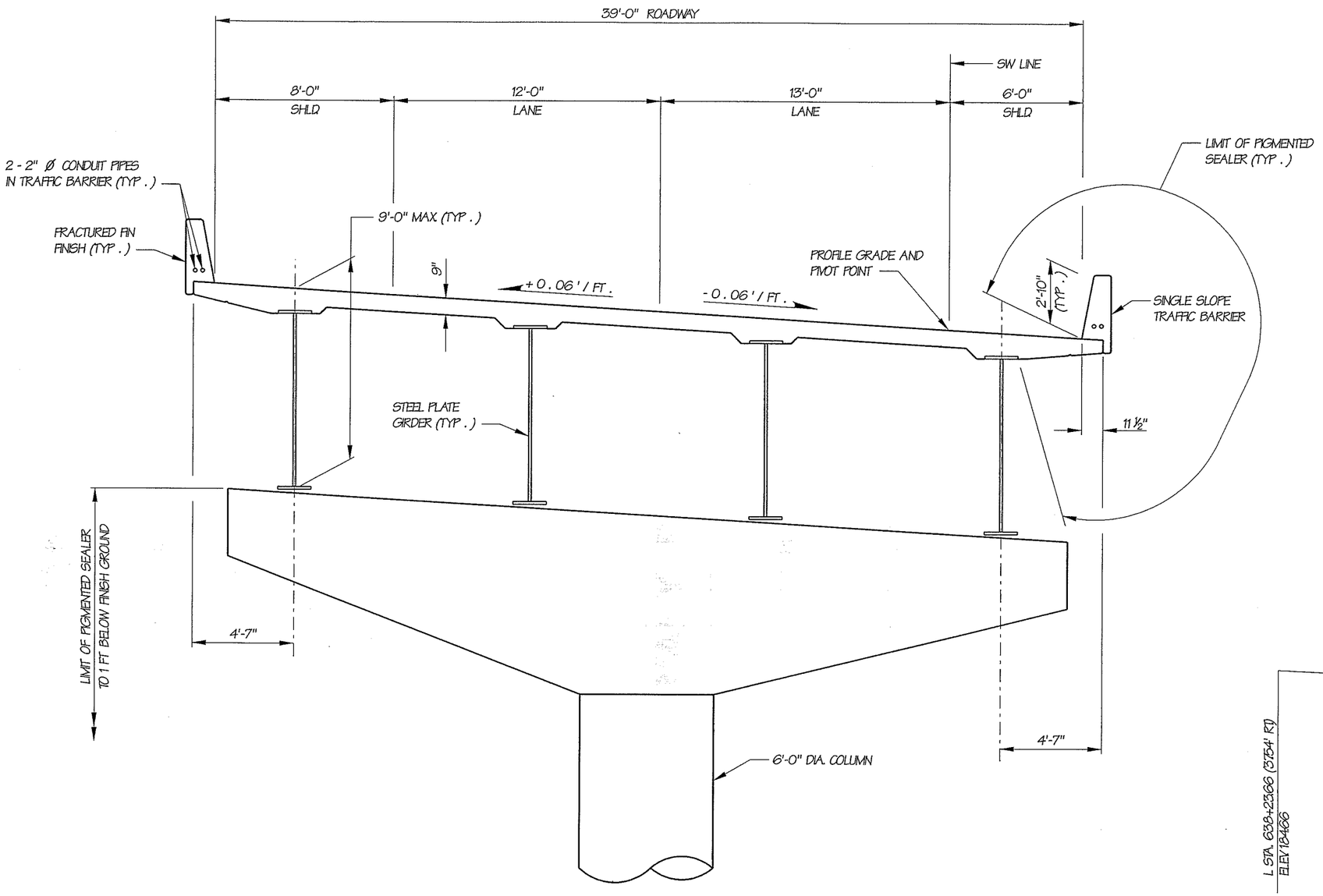

TYPICAL SECTION

SECTION SHOWN AT INTERMEDIATE PIERS 2SW AND 3SW (STA. 32+17, 34+37)
SUBSTRUCTURE DIMENSIONS ARE APPROXIMATE

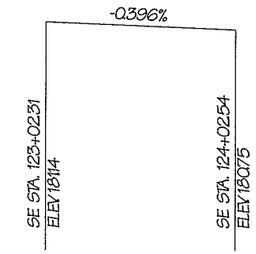

SE LINE PROFILE

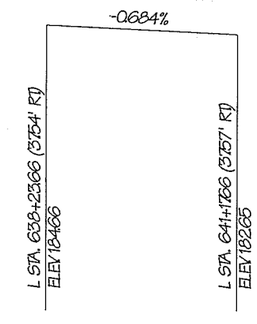

SR-205 NB PROFILE

AT INSIDE ETW

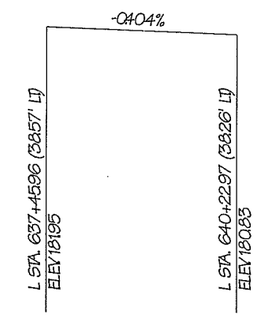

SR-205 SB PROFILE

AT INSIDE ETW

SR ____ JOB NO. ____ SHEET ____

Bridge Design Engr.									
Supervisor									
Designed By									
Checked By									
Detailed By									
Bridge Projects Engr.									
Prelim. Plan By									
Architect/Specialist	DATE	REVISION	BY	APP'D					

REGION NO.	STATE	FED. AID PROJ. NO.	SHEET NO.	TOTAL SHEETS
10	WASH.			
JOB NUMBER				

NICHOLAS M. CLARK — STATE OF WASHINGTON — 29635 — REGISTERED PROFESSIONAL ENGINEER — EXPIRES DEC. 16, 2005

BRIDGE AND STRUCTURES OFFICE

Washington State Department of Transportation

PRELIMINARY PLAN

BRIDGE SHEET NO. 2

SHEET ___ OF ___ SHEETS