CAPITAL IMPROVEMENTS PROGRAM

N.E. 63RD STREET IMPROVEMENTS

FROM ANDRESEN ROAD TO INTERSTATE 205

COUNTY ROAD PROJECT # 330422

PLANS FOR THE CONSTRUCTION OF ROADWAYS, STORM DRAINAGE, WATERLINE, AND SANITARY SEWER

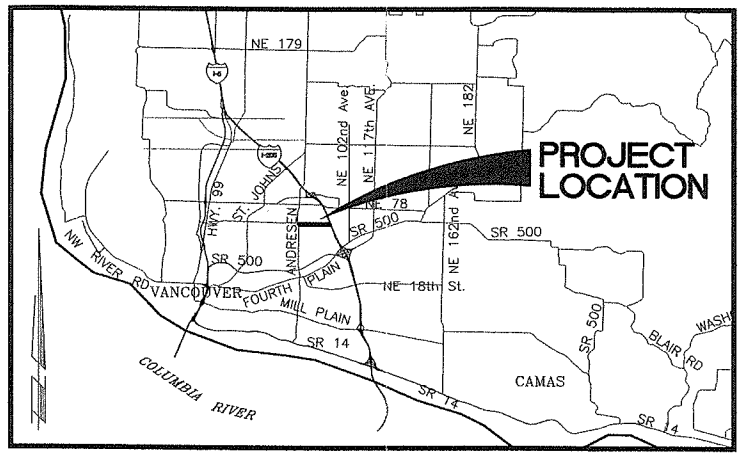

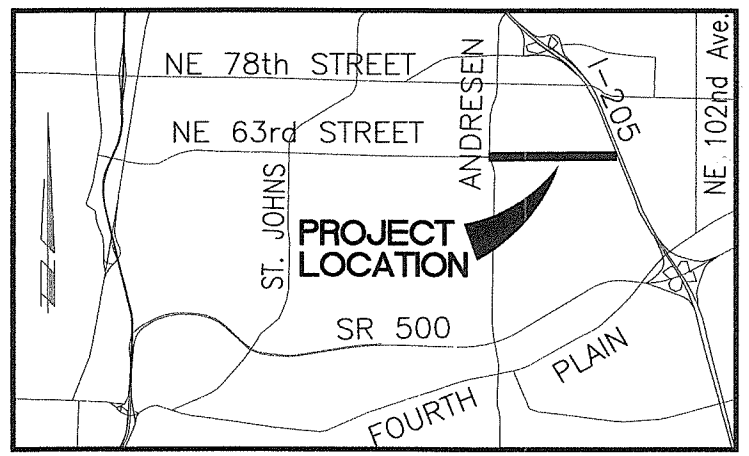

VICINITY MAPS

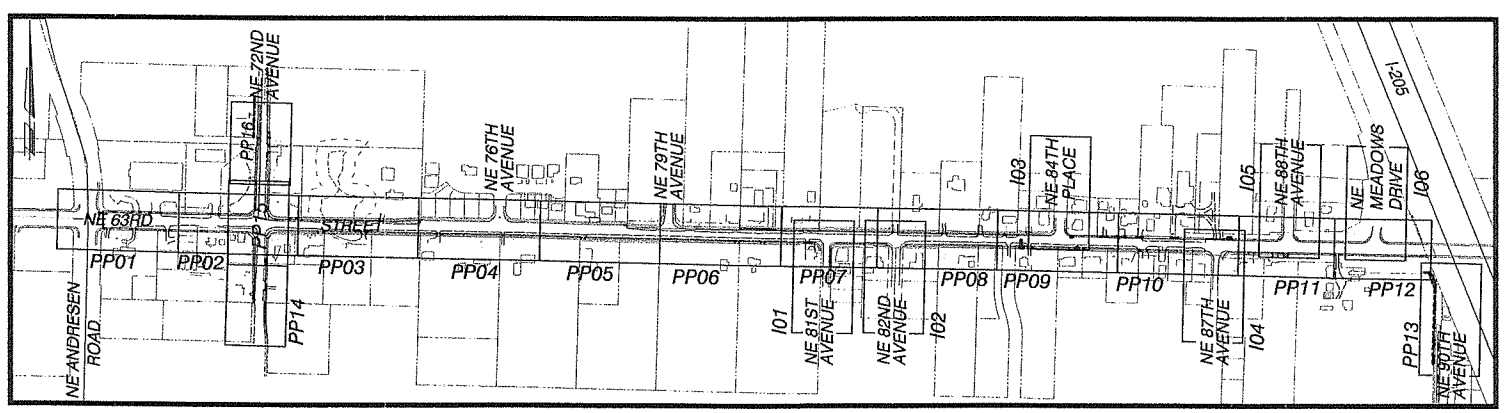

KEY MAP TO SHEETS

INDEX OF SHEETS

SHT.	DWG.	DESCRIPTION
1	A1	COVER SHEET
2	S01	GENERAL NOTES, LEGENDS AND BENCHMARKS
3	S02	SUMMARY OF QUANTITIES
4	S03	EXISTING CATCH BASIN AND MANHOLE TABLES
5	HV1	HORIZONTAL CONTROL PLAN
6	TS1	TYPICAL ROAD SECTIONS
7	TS2	TYPICAL ROAD SECTIONS
8	EC1	EROSION CONTROL PLAN
9	EC2	EROSION CONTROL PLAN
10	EC3	EROSION CONTROL PLAN
11	EC4	EROSION CONTROL PLAN
12	EC5	EROSION CONTROL DETAILS AND NOTES
13	D01	ROADWAY DETAILS
14	D02	ROADWAY DETAILS
15	D03	ROADWAY DRAINAGE DETAILS
16	D04	ROADWAY DRAINAGE DETAILS
17	RW1	RETAINING WALL PROFILES
18	RW2	RETAINING WALL PROFILES
19	RW3	RETAINING WALL PROFILES
20	RW4	RETAINING WALL PROFILES
21	RW5	RETAINING WALL DETAILS
22	SWF1	STORMWATER FACILITY PLAN
23	SWF2	STORMWATER FACILITY SECTION DETAILS
24	SWF3	STORMWATER FACILITY CONTROL STRUCTURE DETAILS
25	SWF4	STORMWATER FACILITY LANDSCAPE PLANS
26	SWF5	STORMWATER MISC. DETAILS.
27	SWF6	WATER QUALITY VAULT DETAILS
28	SWF7	FLOW SPLITTER MANHOLE DETAILS
29	PP01	PLAN AND PROFILE – NE 63rd ST., STA. 28+00 TO STA. 33+00
30	PP02	PLAN AND PROFILE – NE 63rd ST., STA. 33+00 TO STA. 38+00
31	PP03	PLAN AND PROFILE – NE 63rd ST., STA. 38+00 TO STA. 43+00
32	PP04	PLAN AND PROFILE – NE 63rd ST., STA. 43+00 TO STA. 48+00
33	PP05	PLAN AND PROFILE – NE 63rd ST, STA. 48+00 TO STA. 53+00
34	PP06	PLAN AND PROFILE – NE 63rd ST, STA. 53+00 TO STA. 58+00
35	PP07	PLAN AND PROFILE – NE 63rd ST, STA. 58+00 TO STA. 62+00
36	PP08	PLAN AND PROFILE – NE 63rd ST, STA. 62+00 TO STA. 67+00
37	PP09	PLAN AND PROFILE – NE 63rd ST, STA. 67+00 TO STA. 72+00
38	PP10	PLAN AND PROFILE – NE 63rd ST, STA. 72+00 TO STA. 77+00
39	PP11	PLAN AND PROFILE – NE 63rd ST, STA. 77+00 TO STA. 81+00
40	PP12	PLAN AND PROFILE – NE 63rd ST, STA. 81+00 TO STA. 85+25
41	PP13	PLAN AND PROFILE – NE 63rd ST to NE 90th AVE, DRAINAGE OVERFLOW
42	PP14	PLAN AND PROFILE – NE 72nd AVE, STA. 18+00 TO STA. 21+50
43	PP15	PLAN AND PROFILE – NE 72nd AVE, STA. 21+50 TO STA. 25+00
44	PP16	PLAN AND PROFILE – NE 72nd AVE, STA. 25+00 TO STA. 28+50
45	I01	PLAN AND PROFILE – NE 81st AVENUE
46	I02	PLAN AND PROFILE – NE 82nd AVENUE
47	I03	PLAN AND PROFILE – NE 84th PLACE
48	I04	PLAN AND PROFILE – NE 87th AVENUE
49	I05	PLAN AND PROFILE – NE 88th AVENUE
50	I06	PLAN AND PROFILE – NE MEADOWS DR.
51	PH01	POTHOLE DATA CROSS SECTIONS
52	L01	LANDSCAPE DETAILS AND NOTES
53	L02	[illegible]
54	T02	NE 72ND AVENUE PLAN/PROFILE [illegible]
55	T03	NE 72ND AVENUE DETAILS [illegible]
56	T04	NE 72ND AVENUE SIGNAL [illegible]
57	T05	NE 72ND AVENUE SIGNAL STRIPING DETAIL
58	T06	N.E. 63rd STREET SIGNING/STRIPING PLAN
59	T07	N.E. 63rd STREET SIGNING/STRIPING PLAN
60	T08	N.E. 63rd STREET SIGNING/STRIPING PLAN
61	T09	N.E. 63rd STREET SIGNING/STRIPING PLAN
62	T10	N.E. 63rd STREET SIGNING/STRIPING PLAN
63	T11	N.E. 63rd STREET SIGNING/STRIPING PLAN
64	T12	N.E. 72nd AVENUE SIGNING/STRIPING PLAN
65	T13	STRIPING DETAILS
66	T14	SIGN SCHEDULE
67	T15	SIGNING DETAILS
68	U01	CITY OF VANCOUVER PLAN/PROFILE – NE 63rd ST. STA 33+00 TO STA 38+00
69	U02	CITY OF VANCOUVER PLAN/PROFILE – NE 63rd ST. STA 38+00 TO STA 43+00
70	U03	CITY OF VANCOUVER PLAN/PROFILE – NE 63rd ST. STA 43+00 TO STA 48+00
71	U04	CITY OF VANCOUVER PLAN/PROFILE – NE 63rd ST. STA 48+00 TO STA 53+00
72	U05	CITY OF VANCOUVER PLAN/PROFILE – NE 63rd ST. STA 53+00 TO STA 58+00
73	U06	CITY OF VANCOUVER PLAN/PROFILE – NE 63rd ST. STA 58+00 TO STA 62+00
74	U07	CITY OF VANCOUVER PLAN/PROFILE – NE 63rd ST. STA 62+00 TO STA 67+00
75	U08	CITY OF VANCOUVER PLAN/PROFILE – NE 63rd ST. STA 67+00 TO STA 72+00
76	U09	CITY OF VANCOUVER PLAN/PROFILE – NE 63rd ST. STA 72+00 TO STA 77+00
77	U10	CITY OF VANCOUVER PLAN/PROFILE – NE 63rd ST. STA 77+00 TO STA 81+00
78	U11	CITY OF VANCOUVER PLAN/PROFILE – NE 63rd ST. STA 81+00 TO STA 85+25
79	U12	CITY OF VANCOUVER PLAN/PROFILE – NE 72nd AVE. STA 18+00 TO STA 21+50
80	U13	CITY OF VANCOUVER PLAN/PROFILE – NE 72nd AVE. STA 21+50 TO STA 25+00
81	U14	CITY OF VANCOUVER PLAN/PROFILE – NE 72nd AVE. STA 25+00 TO STA 28+50

COMMISSIONERS:

BETTY SUE MORRIS, Chair
JUDIE STANTON, Commissioner
CRAIG PRIDEMORE, Commissioner

CLARK COUNTY WASHINGTON
proud past, promising future

CALL 48 HOURS BEFORE YOU DIG
1-800-424-5555
"It's the Law"
CLARK COUNTY UTILITIES COORDINATING COUNCIL

DEPARTMENT OF PUBLIC WORKS

DESIGN AND ENGINEERING DIVISION - DESIGN SECTION

PAMELA KIEL WIEDEMANN
STATE OF WASHINGTON
32440
REGISTERED PROFESSIONAL ENGINEER
EXPIRES: AUG. 31, 2005

otak Incorporated
700 Washington Street
Suite 401
Vancouver, WA 98660-3139
Phone: (360) 737-9613
FAX: (360) 737-9651

95% SUBMITTAL - AUGUST 27, 2004
NOT FOR CONSTRUCTION

Quality Assurance	Project Manager	Director of Public Works
Tom Grange, P.E. DATE:	Robin Washington DATE:	Peter Capell, P.E. DATE:

ENG 2004-XXXXX

CLARK COUNTY WASHINGTON
proud past, promising future

Recommended for Approval

Grading _____ Erosion _____

Storm Water Plan _____

Development Review Manager _____ Date _____

V: JOHNMA 08/26/04 3:13pm ---> R:\DWG\G944S001.DWG

LINE LEGEND

- PROPOSED ROW LINE
- PROPOSED TEMPORARY CONSTRUCTION EASEMENT
- PROPOSED PERMANENT WALL EASEMENT
- PROPOSED EDGE OF PAVEMENT
- PROPOSED CURB AND GUTTER (TYPE A-1)
- PROPOSED CENTER LINE
- PROPOSED STORM DRAIN PIPE
- F — F — PROPOSED FILL LIMITS
- C — C — PROPOSED CUT LIMITS
- x — x — PROPOSED FENCE LINE
- PROPOSED SAWCUT LINE
- PROPOSED RETAINING WALL
- EXISTING ROW/PROPERTY LINE
- EXISTING EASEMENT
- EXISTING EDGE OF PAVEMENT
- EXISTING CURB LINE
- EXISTING CENTER LINE
- X — X — EXISTING FENCE LINE
- T — T — EXISTING TELEPHONE LINE
- W — W — EXISTING WATER LINE
- E — E — EXISTING UNDERGROUND ELECTRIC
- SS — SS — EXISTING SANITARY SEWER LINE
- SD — SD — EXISTING STORM DRAINAGE
- G — G — EXISTING GAS LINE
- OHL — OHL — EXISTING OVERHEAD POWERLINE
- EXISTING CULVERT
- EXISTING DITCH CENTER LINE
- EXISTING GUARDRAIL
- EXISTING BRUSH LINE
- EXISTING HEDGE
- EXISTING WETLAND BOUNDARY LINE
- EXISTING WETLAND BUFFER LINE

GENERAL NOTES

1. SURVEY DATUM PER CLARK COUNTY.
2. EXISTING UTILITIES SHOWN ON THE PLANS ARE PER SURFACE LOCATIONS, RECORD DRAWINGS, AND LIMITED POTHOLE DATA. THE CONTRACTOR SHALL VERIFY LOCATIONS OF ALL EXISTING UTILITIES PRIOR TO CONSTRUCTION.
3. ALL NECESSARY CONSTRUCTION SURVEY SHALL BE PROVIDED AT NO COST TO THE CONTRACTOR. HOWEVER, THE CONTRACTOR WILL BE RESPONSIBLE FOR REPLACING NEEDED SURVEY STAKES DESTROYED THROUGH NORMAL OPERATIONS, NEGLIGENCE, OR INATTENTION.
4. AT THE END OF EACH WORK DAY THE CONTRACTOR SHALL CLEAN UP THE PROJECT AREA AND LEAVE IT IN A NEAT AND SECURED MANNER. UPON COMPLETION, THE CONTRACTOR SHALL LEAVE THE PROJECT AREA FREE OF DEBRIS AND UNUSED MATERIAL.
5. THE CONTRACTOR SHALL PRUNE ALL VEGETATION, AS APPROVED, AWAY AND UP FROM THE STREET AS WELL AS ANY ROOT PRUNING AS DETERMINED BY THE ENGINEER. THE CONTRACTOR SHALL LEAVE THE PROJECT AREA FREE OF DEBRIS AND UNUSED MATERIAL.
6. ALL ROADWAY STATIONS ARE BASED UPON THE CONSTRUCTION CENTERLINE, WHICH IS REFERENCED TO THE RECORD OF SURVEY (R.O.S.) CENTERLINES.
7. IF EXISTING CONCRETE CURBS AND SIDEWALKS DESIGNATED TO REMAIN ARE DAMAGED THEY WILL BE REMOVED AND REPLACED TO ORIGINAL CONDITION AT THE CONTRACTOR'S EXPENSE.
8. AT A MINIMUM, THE CONTRACTOR IS TO MAINTAIN ALTERNATING ONE WAY TRAFFIC UNLESS APPROVED TRAFFIC CONTROL PLAN ALLOWS OTHERWISE.
9. CONTRACTOR TO NOTIFY THE C-TRAN OPERATION CHIEF, 72 HOURS PRIOR TO CONSTRUCTION NEAR ANY C-TRAN FACILITY.
10. CONTRACTOR TO COORDINATE UTILITY RELOCATIONS WITH CLARK PUBLIC UTILITIES FOR POWER, QWEST FOR TELEPHONE, N.W. NATURAL FOR GAS, COMCAST FOR CABLE TV, THE CITY OF VANCOUVER AND HAZEL DELL SEWER DISTRICT FOR SANITARY SEWER AND THE CITY OF VANCOUVER FOR WATER.
11. CONTRACTOR SHALL PROTECT EXISTING WATER SERVICE LINES. ALL DISTURBED WATER SERVICE LINES SHALL BE REPAIRED AS DIRECTED. ALL RELOCATED METERS WILL BE RESET IN ACCORD WITH CITY OF VANCOUVER STANDARDS AND SPECIFICATIONS. THE CONTRACTOR SHALL BE RESPONSIBLE FOR THE REPAIR OF EXISTING WATER SERVICE LINES DESTROYED THROUGH NEGLIGENCE AND/OR INATTENTION.
12. CONTRACTOR TO MAINTAIN INGRESS AND EGRESS FROM THE FIRE STATION AND ALL PRIVATE PROPERTY DRIVEWAYS DURING CONSTRUCTION.
13. STREET AND PLANTER STRIP DIMENSIONS SHOWN FROM FACE OF CURB ON PLAN AND PROFILE SHEETS.
14. ALL WATER AND SANITARY SEWER WORK TO BE CONSTRUCTED PER THE LATEST EDITION OF CITY OF VANCOUVER STANDARDS NOTES AND DETAILS.

BENCHMARKS-CLARK COUNTY DATUM

DESCRIPTION	STATION	OFFSET	ELEVATION
SURVEY CONTROL POINT #10200 5/8" IRON ROD WITH RED PLASTIC CAP, "CONTROL 22689"	STA. 28+87.26	61.70' LT	268.50
SURVEY CONTROL POINT #153 3-5/8" BRASS DISK IN CONCRETE	STA. 49+68.06	0.00' LT	285.73
SURVEY CONTROL POINT #10203 P.K. NAIL WITH BRASS WASHER	STA. 51+19.68	17.96' LT	287.23
SURVEY CONTROL POINT #154 3-5/8" BRASS DISK IN CONCRETE	STA. 66+23.48	0.00' LT	266.71
SURVEY CONTROL POINT #155 TACK IN LEAD IN CONCRETE WALK	STA. 86+49.07	24.61' RT	254.66

SYMBOLS LEGEND

- PROPOSED MANHOLE (MH)
- PROPOSED CATCH BASIN (CB)
- PROPOSED CURB INLET (CI)
- PROPOSED COMBINATION CURB INLET (CCI)
- PROPOSED FLOW-SPLITTER MH
- PROPOSED DRYWELL
- PROPOSED STORMWATER TREATMENT VAULT
- PROPOSED FIRE HYDRANT
- PROPOSED WATER METER
- PROPOSED WATER VALVE
- EXISTING TRANSFORMER
- EXISTING ELEC TOWER
- EXISTING FIRE HYDRANT
- EXISTING CLEAN OUT
- EXISTING GAS VALVE
- EXISTING WATER METER
- EXISTING WATER VALVE
- EXISTING SIGNAL POLE
- EXISTING TELEPHONE VAULT
- EXISTING CABLE TV BOX
- EXISTING GAS LOCATOR PIPE
- EXISTING CURB OPENING INLET (CI)
- EXISTING CATCH BASIN (CB)
- EXISTING STORM MH OR DRYWELL
- EXISTING SANITARY SEWER
- EXISTING SHRUB
- EXISTING CONIFEROUS TREE
- EXISTING DECIDUOUS TREE
- EXISTING SIGN
- EXISTING J BOX
- EXISTING TELEPHONE MANHOLE
- EXISTING LIGHT
- EXISTING GUY ANCHOR
- EXISTING UTILITY POLE
- EXISTING MAIL BOX
- EXISTING TELEPHONE JUNCTION BOX
- EXISTING SPRINKLER HEAD
- TRAVERSE POINT
- TEST HOLE

FOR LANDSCAPE SYMBOLS
SEE DRAWING L01

PATTERN LEGEND

- PROPOSED PCC SIDEWALK AND DRIVEWAYS
- PROPOSED CONCRETE DRIVEWAY APPROACH
- NEW A.C. PAVEMENT DRIVEWAY RECONSTRUCTION
- PROPOSED CURB RAMP PER CLARK COUNTY DETAILS, SEE SHEET D01
- EXISTING BUILDING

NOTE SYMBOLS

- 1XX — EXISTING SANITARY MANHOLE (SEE SHT. S03)
- 2XX — EXISTING STORM DRAIN STRUCTURE (SEE SHT. S03)
- SD# — PROPOSED STORM DRAIN STRUCTURE NOTE
- MH# — PROPOSED STORM DRAIN MANHOLE NUMBER
- CB# — PROPOSED CATCH BASIN/CURB INLET NUMBER
- XX — CURB NUMBER
- XX — ROAD CENTERLINE CURVE DATA
- X — CONSTRUCTION NOTE

OBJECT TO BE:

REMOVED	= RM
RELOCATED	= RL
ABANDONED	= AB
REPLACED & RELOCATED	= RP
RELOCATED & ADJUSTED TO GRADE	= RA
ADJUSTED TO GRADE	= AD
TRIMMED	= T

BY: CONTRACTOR / CITY/COUNTY FORCES / OTHERS

NOT FOR CONSTRUCTION

DESIGN & ENGINEERING DIVISION
NE 63RD STREET IMPROVEMENTS

GENERAL NOTES, LEGENDS AND BENCHMARKS

CLARK COUNTY WASHINGTON
proud past, promising future

otak Incorporated
700 Washington St. Suite 401
Vancouver, WA 98660
Phone: (360) 737-9613
FAX: (360) 737-9651

CALL 48 HOURS BEFORE YOU DIG
1-800-424-5555
"It's the Law"
NORTHWEST UTILITIES NOTIFICATION CENTER

PAMELA K. WEIDMANN, STATE OF WASHINGTON, 22440, REGISTERED PROFESSIONAL ENGINEER
EXPIRES AUG. 31, 2005

DESIGNED:	PKW
DRAWN:	SLW
CRP:	330422
HORIZ.	NA
VERT:	NA
DATE:	8/27/2004
DWG:	S01
SHEET	2 OF 81

DEP L051
scale: 1
solved
178X001
:W
XX/XX

SUMMARY OF QUANTITIES

ITEM #	UNIT	TOTAL QUANTITY	DESCRIPTION
			PART 1 – ROADWAY AND STORM DRAINAGE
1	L.S.	1	MOBILIZATION
2	CALC.	1	MINOR CHANGE
			TRAFFIC CONTROL
3	HOUR	2,500	TRAFFIC CONTROL LABOR
4	HOUR	750	TRAFFIC CONTROL SUPERVISOR
5	L.S.	1	TEMPORARY TRAFFIC CONTROL DEVICES
6	S.F.	250	CONSTRUCTION SIGN CLASS "A"
7	S.F.	72	INSTALL PROJECT IDENTIFICATION SIGN
			PREPARATION
8	L.S.	1	CLEARING AND GRUBBING
9	EACH	100	TREE REMOVAL, 12 INCH DIAM. AND LARGER
10	EST.	1	ROADSIDE CLEANUP
11	L.S.	1	REMOVAL OF STRUCTURE AND OBSTRUCTION
12	L.S.	1	REMOVAL OF BUILDINGS (7103 NE 63RD STREET)
13	L.S.	1	REMOVAL OF BUILDINGS (6214 NE 72ND AVENUE)
14	EST.	1	REMOVAL OF HAZARDOUS MATERIALS – EQUITABLE ADJUSTMENT
			GRADING
15	C.Y.	23,050	ROADWAY EXCAVATION, INCLUDING HAUL
16	C.Y.	8,000	ENBANKMENT COMPACTION
17	C.Y.	7,000	STORMWATER FACILITY GRADING INCLUDING EXCAVATION AND HAUL
18	MGAL.	500	WATER
19	S.Y.	9,000	CONSTRUCTION GEOTEXTILE FOR SOIL STABILIZATION
			BASES
20	TON	22,700	CRUSHED SURFACING BASE COURSE
21	S.Y.	160	GRAVEL ACCESS ROAD
			HOT MIX ASPHALT
22	TON	5,950	HMA CL 1/2" PG 64–22
23	TON	6,000	HMA CL 3/4" PG 64–22
24	L.F.	800	SAWCUT EXISTING ASPHALT PAVEMENT
25	S.Y.	40	HMA CL 1/2" PG 64–22 RAMP
26	S.Y.	1,900	HMA FOR APPROACH CL 1/2" PG 64–22
			MINOR STRUCTURES
27	S.F.	650	MODULAR BLOCK RETAINING WALL
28	S.F.	12,350	MSE RETAINING WALL
29	L.F.	1,300	VINYL COATED CHAIN LINK FENCE TYPE 6, BLACK FOR MODULAR BLOCK WALL
			MANHOLES, DRAINAGE STRUCTURE, STORM SEWER
30	L.F.	7,364	TRENCH SAFETY SYSTEM
31	L.F.	1,102	STORM SEWER PIPE, 10 IN. DIAM.
32	L.F.	180	DUCTILE IRON STORM SEWER PIPE, 10 IN. DIAM.
33	L.F.	830	STORM SEWER PERF PIPE, 12 IN. DIAM. W/ INFILTRATION TRENCHING
34	L.F.	3,309	STORM SEWER PIPE, 12 IN. DIAM.
35	L.F.	15	STORM SEWER PIPE, 15 IN. DIAM.
36	L.F.	350	REINFORCED CONCRETE STORM SEWER PIPE, 15 IN. DIAM.
37	L.F.	532	REINFORCED CONCRETE STORM SEWER PIPE, 18 IN. DIAM.
38	L.F.	824	STORM SEWER PIPE, 24 IN. DIAM.
39	L.F.	222	REINFORCED CONCRETE STORM SEWER PIPE, 24 IN. DIAM.
40	EACH	2	MANHOLE, 48 IN DIAM. TYPE 1
41	EACH	18	MANHOLE, 48 IN DIAM. TYPE 3
42	EACH	2	MANHOLE, 60 IN DIAM. TYPE 1
43	EACH	5	MANHOLE, 60 IN DIAM. TYPE 3
44	EACH	3	MANHOLE, 60 IN DIAM. TYPE 3 WITH FLOW SPLITTER
45	EACH	9	PRECAST CONCRETE DRYWELL, 48 IN DIAM.
46	EACH	1	PRECAST CONCRETE DRYWELL, 48 IN DIAM. WITH GRATED LID
47	L.S.	1	STANDARD PRECAST STORMFILTER™ UNIT – VAULT C6, 6 FT. x 12 FT.
48	L.S.	1	STANDARD PRECAST STORMFILTER™ UNIT – VAULT E9, 6 FT. x 12 FT.
49	L.S.	1	STANDARD PRECAST STORMFILTER™ UNIT – VAULT E4, 6 FT. x 12 FT.
50	EACH	2	STORMFILTER™ TWO CARTRIDGE CATCH BASIN
51	EACH	1	CATCH BASIN, TYPE 1
52	EACH	30	CURB INLET
53	EACH	18	COMBINATION CURB INLET
54	EACH	5	DITCH INLET
55	EACH	9	ADJUST MANHOLE, METHOD 1
56	EACH	9	ADJUST MANHOLE, METHOD 2
57	EACH	3	CONNECTION TO DRAINAGE STRUCTURE
58	EACH	20	ADJUST GAS VALVE RIM, COVER OR FRAME
			EROSION CONTROL AND PLANTING
59	HOUR	100	ESC LEAD
60	ACRE	1.75	SEEDING AND MULCHING
61	ACRE	0.60	SEEDING AND MULCHING FOR STORMWATER FACILITY
62	L.F.	11,100	SILT FENCE
63	L.F.	600	ORANGE CONSTRUCTION FENCE
64	EACH	66	INLET PROTECTION
65	S.F.	175	OPEN CELL MASONRY GRID
66	EACH	1	CONSTRUCTION ENTRANCE
67	EACH	1	TIRE WASH
68	EACH	1	EROSION CONTROL AND SPILL PREVENTION REINSPECTION FEE
69	EACH	1	SPCC PLAN
70	C.Y.	820	TOPSOIL, TYPE A
71	EACH	45	PSIPE – 2 IN. CALIPER TREE (PAPERBACK MAPLE)
72	EACH	80	PSIPE – 1.5 IN. CALIPER TREE (AMERICAN HORNBEAM)
73	EACH	210	PSIPE – SHRUB, 2 GAL.
74	EACH	2,670	PSIPE – GROUNDCOVER, 1 GAL.
75	L.S.	1	LANDSCAPING FOR STORMWATER FACILITY
76	C.Y.	275	BARK MULCH, 4–IN. DEPTH

SUMMARY OF QUANTITIES

ITEM #	UNIT	TOTAL QUANTITY	DESCRIPTION
			PART 1 – ROADWAY AND STORM DRAINAGE
			OTHER
77	L.F.	11,560	CEMENT CONCRETE TRAFFIC CURB AND GUTTER, TYPE A–1
78	L.F.	200	CEMENT CONCRETE CURB, TYPE E–1
79	L.F.	250	EXTRUDED CURB (TYPE 6)
80	S.Y.	1,100	CEMENT CONCRETE APPROACH 3 DAY
81	S.Y.	26	CEMENT CONCRETE APPROACH 3 DAY, WITH #4 REBAR
82	S.Y.	165	CEMENT CONCRETE DRIVEWAY
83	EACH	116	TREE ROOT BARRIER (20 LF PER STREET TREE)
84	L.F.	730	VINYL COATED CHAIN LINK FENCE, TYPE 1, BLACK
85	EACH	1	16' WIDE CHAIN LINK GATE, TYPE 1, BLACK
86	EACH	10	ADJUST SURVEY MONUMENT CASE AND COVER
87	S.Y.	6,950	CEMENT CONCRETE SIDEWALK
88	S.Y.	100	THICKENED CEMENT CONCRETE SIDEWALK
89	EACH	30	DETECTABLE WARNING PATTERN
90	EACH	35	MAILBOX SUPPORT, TYPE 1
91	EACH	5	MAILBOX SUPPORT, TYPE 2
			ILLUMINATION, SIGNALS, ELECTRICAL AND SIGNAGE
92	L.S.	1	TRAFFIC SIGNAL SYSTEM INSTALLATION – 63RD/72ND
			PERMANENT SIGNING
93	L.S.	1	PERMANENT SIGNING
94	L.S.	1	REMOVING PAINT LINE

SUMMARY OF QUANTITIES

ITEM #	UNIT	TOTAL QUANTITY	DESCRIPTION
			PART 2 – CITY OF VANCOUVER WATER AND SANITARY SEWER
95	L.S.	1	MOBILIZATION
96	L.S.	1	MINOR CHANGE
			TRAFFIC CONTROL
97	HOUR	1,500	TRAFFIC CONTROL LABOR
98	HOUR	500	TRAFFIC CONTROL SUPERVISOR
99	L.S.	1	TEMPORARY TRAFFIC CONTROL DEVICES
			SANITARY SEWER
100	L.F.	1,262	TRENCH SAFETY SYSTEM
101	L.F.	216	TRENCH EXCAVATION, BACKFILL AND COMPACTION (LESS THAN 10 FT DEEP)
102	L.F.	898	TRENCH EXCAVATION, BACKFILL AND COMPACTION (10 FT TO 12 FT DEEP)
103	TON	875	SELECT GRANULAR BACKFILL (IMPORT)
104	L.F.	1,114	PVC SEWER PIPE AND BEDDING, 8 IN DIAM.
105	L.F.	70	PVC SEWER PIPE LATERAL, 6 IN DIAM.
106	L.F.	78	PVC SEWER PIPE LATERAL, 4 IN DIAM.
107	EACH	3	PVC TEES OR WYES, 8 IN DIAM.
108	EACH	1	LATERAL CONNECTION TO MANHOLE
109	EACH	3	SANITARY MANHOLE (LESS THAN 10 FT. DEEP)
110	EACH	1	SANITARY MANHOLE (10 FT. TO 14 FT. DEEP)
111	EACH	1	SANITARY MANHOLE (14 FT. TO 16 FT. DEEP)
112	EACH	1	OUTSIDE DROP MANHOLE CONNECTION
113	EACH	4	CLEANOUT
			WATER MAINS
114	L.F.	1,960	TRENCH SAFETY SYSTEM
115	L.F.	230	12 IN. CL. 52 D.I. MAIN
116	L.F.	1,170	10 IN. CL. 52 D.I. MAIN
117	L.F.	325	8 IN. CL. 52 D.I. MAIN
118	L.F.	235	6 IN. CL. 52 D.I. MAIN
119	EACH	8	12 IN./10 IN. x 8 IN. TAP AND SLEEVE
120	EACH	5	10 IN. x 6 IN. TAP AND SLEEVE
121	EACH	2	10 IN. x 8 IN. MJ TEE
122	EACH	1	12 IN. x 8 IN. MJ TEE
123	EACH	1	6 IN. x 6 IN. MJ TEE
124	EACH	2	10 IN. MJ 90 ELBOW
125	EACH	4	10 IN. MJ 45 ELBOW
126	EACH	2	10 IN. MJ 11 1/4 ELBOW
127	EACH	1	12 IN. x 10 IN. MJ CROSS
128	EACH	1	8 IN. MJ CROSS
129	EACH	1	10 IN. x 6 IN. MJ REDUCER
130	EACH	4	8 IN. MJ CAP
131	EACH	4	6 IN. MJ CAP
132	EACH	3	10 IN. x 8 IN. MJ GATE VALVE
133	EACH	2	10 IN. MJ BUTTERFLY VALVE
134	EACH	8	8 IN. TAPPING VALVE
135	EACH	5	6 IN. TAPPING VALVE
136	EACH	10	TEMPORARY BLOWOFF VALVE
137	EACH	19	THRUST BLOCKS
138	EACH	5	NEW FIRE HYDRANT ASSEMBLY
139	EACH	4	ADJUST FIRE HYDRANT TO FINISH GRADE
140	EACH	2	RELOCATE FIRE HYDRANT
141	EACH	8	CONNECT TO EXISTING WATERLINE
142	EACH	27	RELOCATE EXISTING SERVICE
143	EACH	1	REMOVE EXISTING SERVICE
144	EACH	5	TRANSFER EXISTING SERVICE
145	EACH	17	ADJUST WATER VALVE BOX

NOT FOR CONSTRUCTION

DESIGNED: PKW
DRAWN: SLW
CRP: 330422
HORIZ. NA
VERT. NA
DATE: 8/27/2004
DWG: S02
SHEET 3 OF 81

CALL 48 HOURS BEFORE YOU DIG 1-800-424-5555 "It's the Law" NORTHWEST UTILITIES NOTIFICATION CENTER

PAMELA J. WIESEMANN STATE OF WASHINGTON 22440 REGISTERED PROFESSIONAL ENGINEER EXPIRES AUG. 31, 2005

otak Incorporated
700 Washington St., Suite 401
Vancouver, WA 98660
Phone: (360) 737-4993
FAX: (360) 737-9651

DESIGN & ENGINEERING DIVISION
NE 63RD STREET IMPROVEMENTS

SUMMARY OF QUANTITIES

proud past, promising future
CLARK COUNTY WASHINGTON

V: SHERYL 08/26/04 6:27pm --> V:\PROJECT\11900\11944\DWG\C9445003.DWG

EXISTING CATCH BASIN AND MANHOLE TABLES

SHEET PP01

EXISTING CATCH BASIN TABLE

202 CATCH BASIN
RIM= 268.53
IE OUT= 267.63 (8" SW)

EXISTING MANHOLE TABLE

101 SAN MH
RIM= 267.33
IE= 258.33 (8" E PVC)
IE= 258.33 (8" W PVC)
IE= 258.33 (8" N PVC)

201 STORM MH
RIM= 269.52
IE= 261.02 (18" E CMP)
IE= 261.02 (18" W CPP)
IE= 261.02 (18" N CMP)
(HALF FULL WITH SILT)
IE= 261.02 (18" S CMP)
(HALF FULL WITH SILT)

203 STORM MH
RIM= 266.41
IE IN= 261.31 (18" E)
IE IN= 261.31 (18" W)
IE OUT= 261.31 (18" S)

SHEET PP04

EXISTING CATCH BASIN TABLE

205 CATCH BASIN
RIM= 269.99
IE OUT= 266.99 (10" S)

207 CATCH BASIN
RIM= 281.18
IE OUT= 278.18 (10" W)

EXISTING MANHOLE TABLE

102 SAN MH
RIM = 279.60
IE= 268.00 (8" N)

204 STORM MH
RIM= 270.20
IE IN= 266.70 (10" N)
IE OUT= 266.50 (12" E)

206 STORM MH
RIM= 279.26
IE IN= 274.36 (10" E)
IE IN= 265.26 (12" W)
IE OUT= 265.26 (10" N)

SHEET PP05

EXISTING MANHOLE TABLE

104 SAN MH
RIM= 287.01
IE IN= 279.41 (8" E)
IE OUT= 279.41 (8" N)

105 SAN MH
RIM= 287.41
IE OUT= 280.11 (8" E)

SHEET PP07

EXISTING CATCH BASIN TABLE

209 CATCH BASIN
RIM= 272.98
IE OUT= 269.48 (8" N)

EXISTING MANHOLE TABLE

106 SAN MH
RIM= 274.63
IE IN= 266.43 (8" 2)
IE OUT= 266.43 (8" E)

208 STORM DRYWELL
RIM= 272.97
IE IN= 268.37 (8" S)

SHEET PP08

EXISTING MANHOLE TABLE

107 SAN MH
RIM= 271.29
IE IN= 264.19 (8" W)
IE OUT= 264.19 (8" E)

108 SAN MH
RIM= 268.05
IE IN= 261.65 (8" W)
IE OUT= 261.65 (8" E)

SHEET PP09

EXISTING CATCH BASIN TABLE

211 CATCH BASIN
RIM= 266.93
IE OUT= 264.33 (8" S)

EXISTING MANHOLE TABLE

109 SAN MH
RIM = 270.12
IE IN = 259.72 (8" E)
IE IN= 259.72 (8" W)
IE = 259.72 (8" S)
IE = 259.72 (8" N)

210 STORM DRYWELL
RIM = 266.83
IE IN = 262.63 (8" N)

SHEET PP10

EXISTING CATCH BASIN TABLE

213 CATCH BASIN
RIM= 262.68
IE OUT= 260.38 (12" W)

215 CATCH BASIN
RIM= 260.48
IE OUT= 258.68 (8" SW)

EXISTING MANHOLE TABLE

110 SAN MH
RIM= 276.55
IE IN= 260.75 (8" W)
IE OUT= 260.75 (8" E)

111 SAN MH
RIM= 272.43
IE OUT= 261.63 (8" W)

212 STORM MH
RIM= 263.74
IE IN= 12" E)

214 STORM MH
RIM= 263.15
IE IN= 258.55 (8" NE)

SHEET PP11

EXISTING CATCH BASIN TABLE

216 CATCH BASIN
RIM= 254.85
IE OUT= 250.25 (15" N)

217 CATCH BASIN
RIM= 254.94
IE OUT= 253.04 (8" W)

218 CATCH BASIN
RIM= 254.69
IE OUT= 250.99 (15" S)

SHEET PP12

EXISTING CATCH BASIN TABLE

219 CATCH BASIN
RIM= 257.42
IE OUT= 254.42 (8" NE)
IN IE= 193.16 (12"S)
IN IE= 193.26 (12"N)

220 CATCH BASIN
RIM= 257.01
IE IN= 2253.21 (8" SW)
IE OUT= 253.21 (8" E)

221 CATCH BASIN
RIM= 258.02
IE OUT= 256.42 (8" SE)

222 CATCH BASIN
RIM= 257.60
IE IN= 253.80 (8" NW)
IE OUT= 253.80 (8" S)

SHEET PP14

EXISTING CATCH BASIN TABLE

224 CATCH BASIN
RIM= 281.64
IE OUT= 277.54 (10" W)

EXISTING MANHOLE TABLE

223 STORM DRYWELL
RIM= 281.99
IE IN= 276.99 (10" E)
IE IN= 276.99 (12" S)

225 STORM DRYWELL
RIM= 285.27
IE IN= 276.77 (12" N)

SHEET I01

EXISTING CATCH BASIN TABLE

227 CATCH BASIN
RIM= 277.82
IE OUT= 275.72 (8" E)

228 CATCH BASIN
RIM= 279.14
IE OUT= 275.64 (8" W)

EXISTING MANHOLE TABLE

226 STORM MH
RIM= 279.83
IE IN= 275.73 (8" E)
IE IN= 275.73 (8" W)
IE OUT= 275.73 (12" S)

SHEET I02

EXISTING CATCH BASIN TABLE

230 CATCH BASIN
RIM= 268.22
IE IN = 266.22 (6" W)

231 CATCH BASIN
RIM= 268.39
IE OUT = 266.49 (6" E)

SHEET I03

EXISTING MANHOLE TABLE

109 SAN MH
RIM = 270.12
IE IN = 259.72 (8" E)
IE IN= 259.72 (8" W)
IE = 259.72 (8" S)
IE = 259.72 (8" N)

NOT FOR CONSTRUCTION

DESIGNED: SLW
DRAWN: GME
CRP: 330422
HORIZ. NA
VERT. NA
DATE: 8/27/2004
DWG: SO3
SHEET 4 OF 81

CALL 48 HOURS BEFORE YOU DIG 1-800-424-5555 "It's the Law" NORTHWEST UTILITIES NOTIFICATION CENTER

STATE OF WASHINGTON PAUL E. WEDEMANN 37140 REGISTERED PROFESSIONAL ENGINEER EXPIRES AUG. 31, 2005

otak Incorporated
700 Washington St. Suite 401
Vancouver, WA 98660
Phone: (360) 737-9613
FAX: (360) 737-9651

DESIGN & ENGINEERING DIVISION
NE 63RD STREET IMPROVEMENTS

EXISTING CATCH BASIN AND MANHOLE TABLES

proud past, promising future
CLARK COUNTY WASHINGTON

REF_LIST
tscale: 1
resolved
3944x001_border
KW WASH

V: SHERYL 08/24/04 6:09pm --> V:\PROJECT\11900\119144\DWG\C944S004.DWG

V: SHERYL 08/24/04 6:10pm --> V:\PROJECT\11900\11944\DWG\C944S004A.DWG

REF LIST
REF LIST
tscale: 200
esolved
944x001_border
944x500
KW WASH

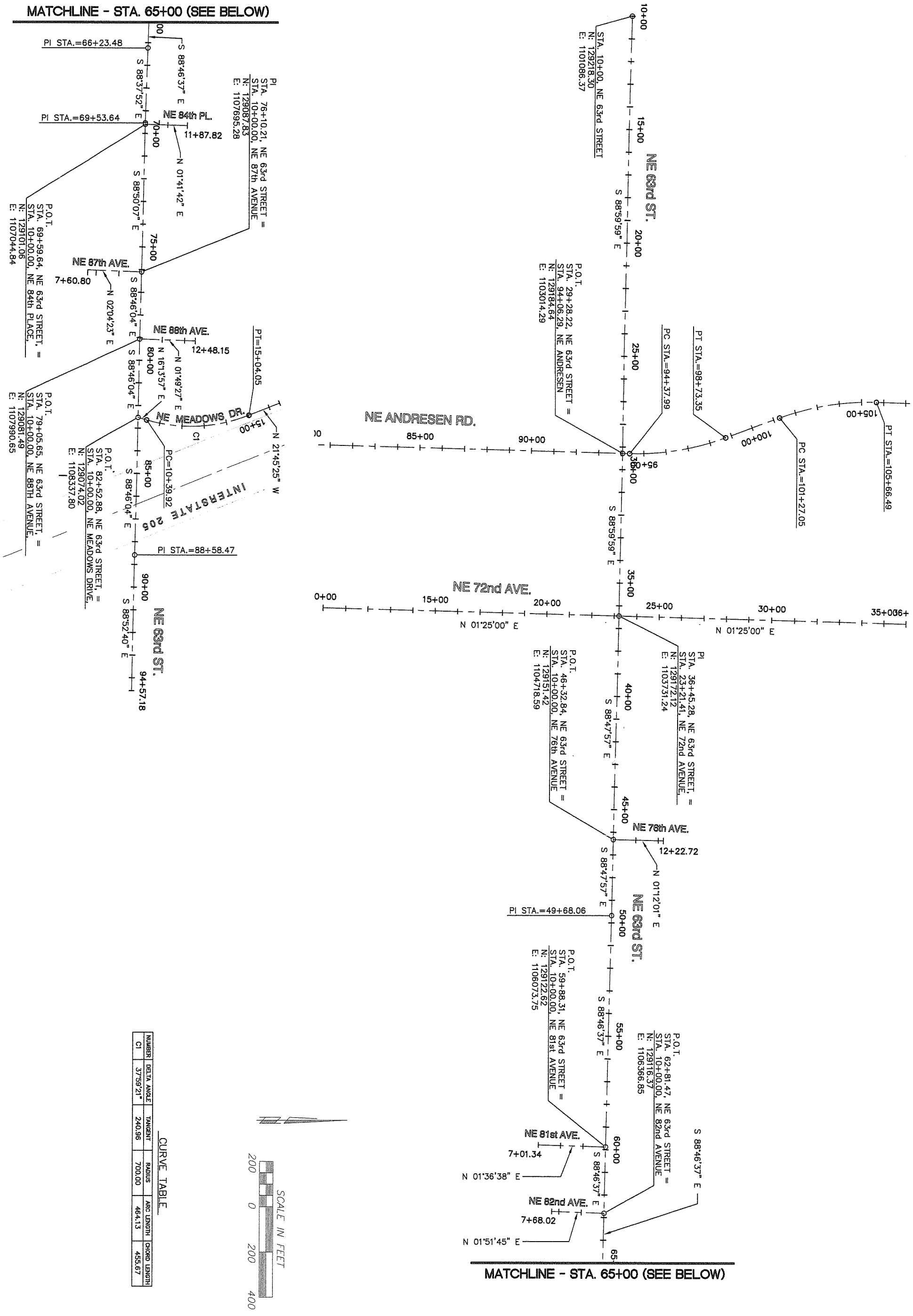

CURVE TABLE

NUMBER	DELTA ANGLE	TANGENT	RADIUS	ARC LENGTH	CHORD LENGTH
C1	37°59'21"	240.96	700.00	464.13	455.67

SCALE IN FEET
200 0 200 400

NOT FOR CONSTRUCTION

proud past, promising future
CLARK COUNTY
WASHINGTON

DESIGN & ENGINEERING DIVISION
NE 63RD STREET IMPROVEMENTS

NE 63RD STREET
HORIZONTAL CONTROL PLAN

otak Incorporated
700 Washington St., Suite 401
Vancouver, WA 98660
Phone: (360) 737-9613
FAX: (360) 737-9651

PAMELA KIEL WIEDEMANN
STATE OF WASHINGTON
22440
REGISTERED PROFESSIONAL ENGINEER
EXPIRES:AUG. 31, 2005

CALL 48 HOURS BEFORE YOU DIG
1-800-424-5555
"It's the Law"
NORTHWEST UTILITIES NOTIFICATION CENTER

DESIGNED:	SLW
DRAWN:	JRM
CRP:	330422
HORIZ.	1" = 200'
VERT.	NA
DATE:	8/27/2004
DWG:	HV1
SHEET	5 OF 81

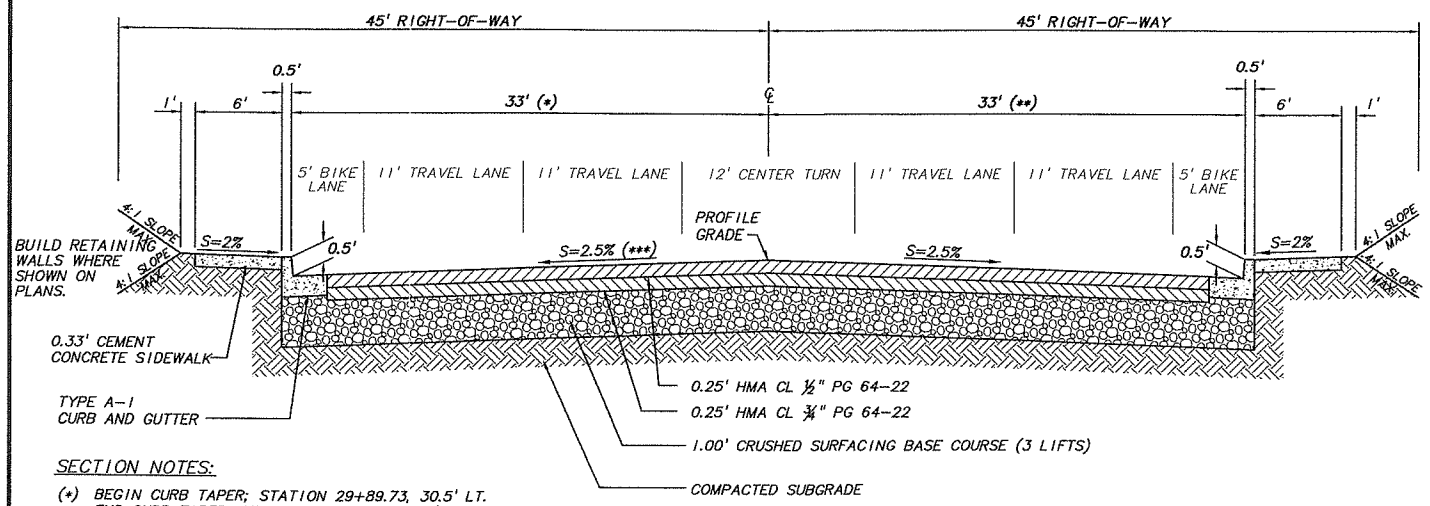

SECTION NOTES:

(*) BEGIN CURB TAPER; STATION 29+89.73, 30.5' LT.
END CURB TAPER; STATION 31+00.00, 33.0' LT.

(**) BEGIN CURB TAPER; STATION 29+90.10, 33.5' RT.
END CURB TAPER; STATION 31+00.00, 33.0' RT.

(***) SLOPE VARIES FROM +1.0%(%) TO MATCH EXISTING CURB, STATION 29+89.73 TO -2.5% AT STATION 31+00.00

N.E. 63RD STREET

N.T.S.

STATION 29+90 TO 36+45.28

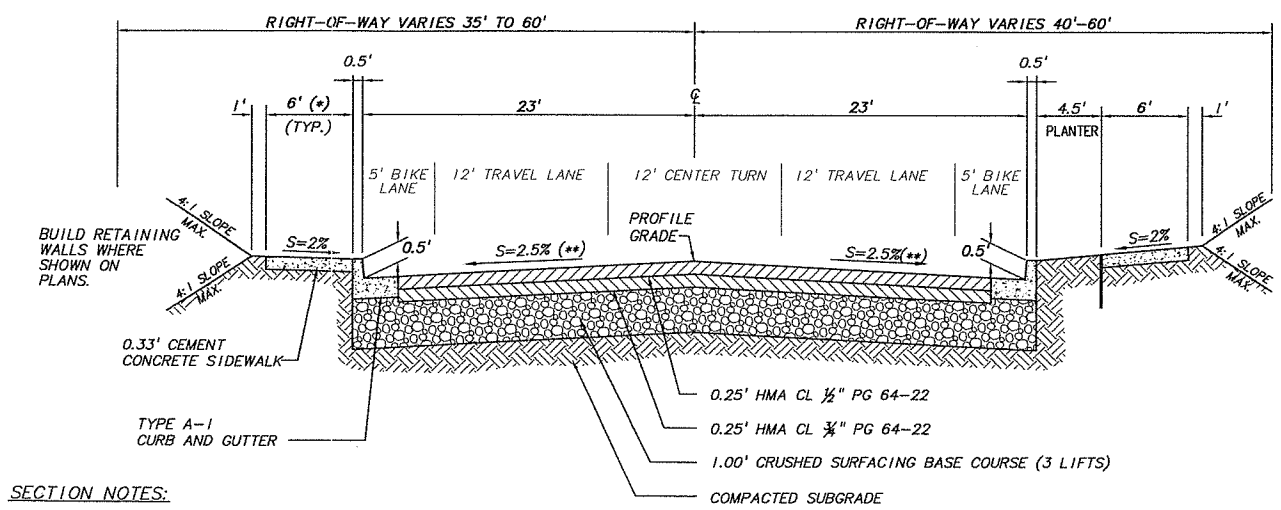

SECTION NOTES:

(*) CONSTRUCT 8' SIDEWALK:
STATION 37+03.50 TO STATION 38+10.36 LT
STATION 71+84.40 TO STATION 74+60.18 LT

(**) ADJUST CROSS SLOPES AT 72ND AVE INTERSECTION AS SHOWN ON PLANS

N.E. 63RD STREET

N.T.S.

STATION 36+45.28 TO STATION 38+10.36
STATION 69+08.28 TO STATION 78+85.00

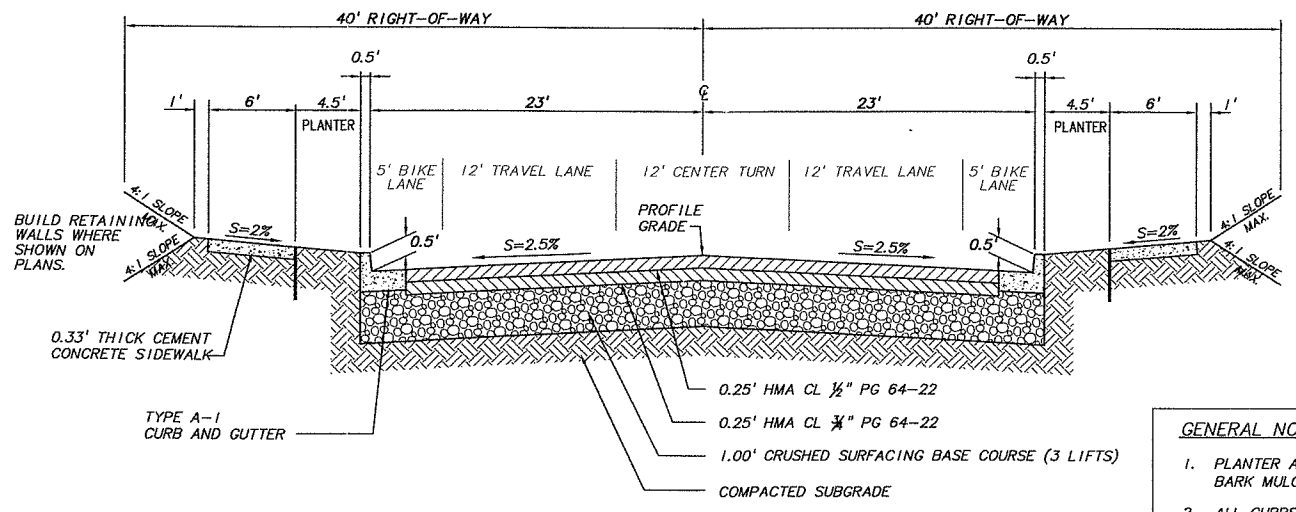

N.E. 63RD STREET

N.T.S.

STATION 38+10.36 TO STATION 42+00.00
STATION 61+79.21 TO STATION 69+08.28

STATION 56+30.00 TO STATION 58+94.27

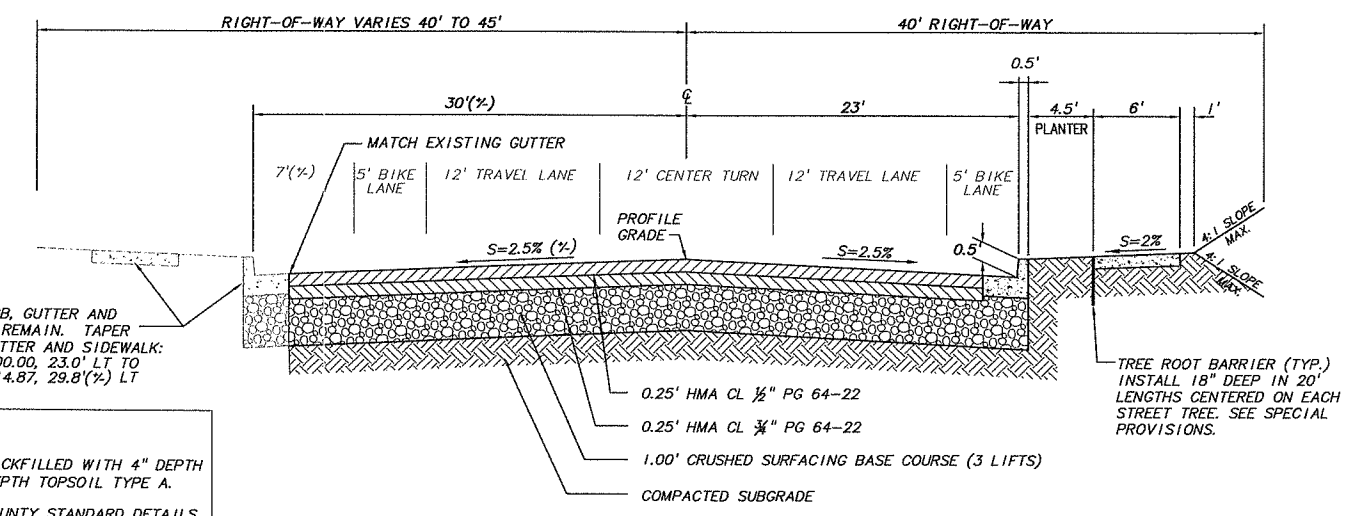

N.E. 63RD STREET

N.T.S.

STATION 42+00.00 TO STATION 51+50.00

GENERAL NOTES:

1. PLANTER AREAS TO BE BACKFILLED WITH 4" DEPTH BARK MULCH OVER 12" DEPTH TOPSOIL TYPE A.
2. ALL CURBS PER CLARK COUNTY STANDARD DETAILS. SEE SIDEWALK DETAIL, DWG. NO. D02.
3. CONTRACTOR TO MAINTAIN 5' MIN. CLEARANCE IN SIDEWALK AROUND MAILBOXES AND OTHER PERMANENT SIDEWALK OBSTRUCTIONS. SEE DETAIL ON SHEET D01
4. NE 63RD PAVEMENT SECTION TO EXTEND TO END OF CURB RETURNS ON SIDESTREETS

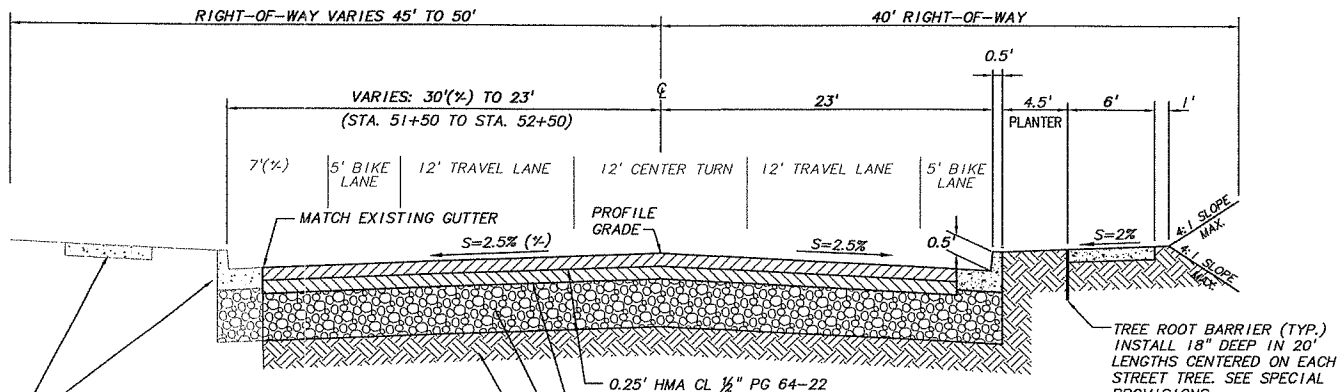

N.E. 63RD STREET

N.T.S.

STATION 51+50.00 TO STATION 56+30.00

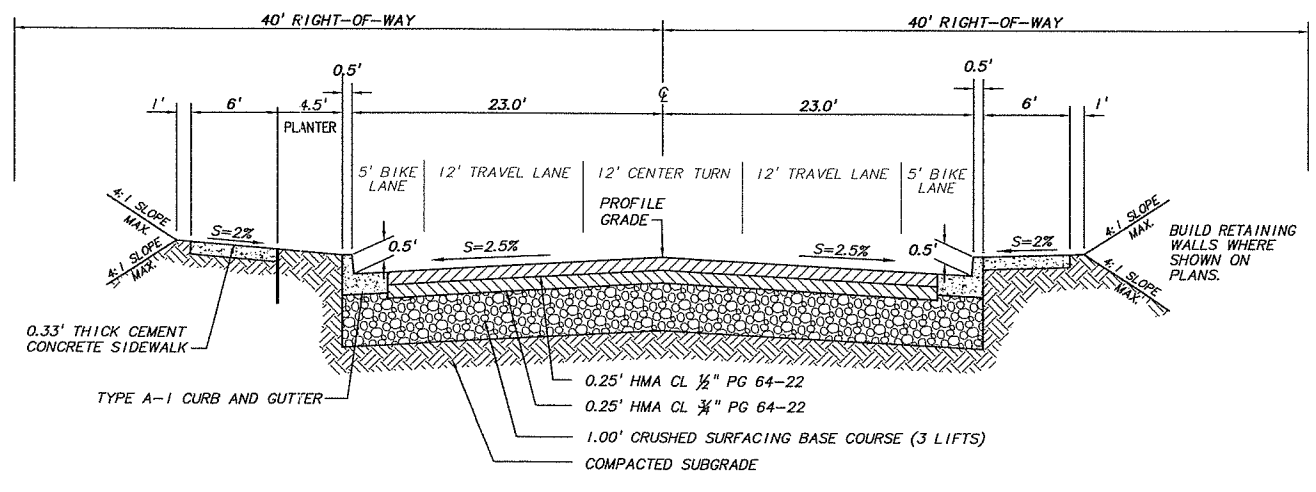

N.E. 63RD STREET

N.T.S.

STATION 58+94.27 TO STATION 61+79.21

NOT FOR CONSTRUCTION

DESIGNED: SLW
DRAWN: GME
CRP: 330422
HORIZ. NA
VERT. NA
DATE: 8/27/2004
DWG: TS1
SHEET 6 OF 81

CALL 48 HOURS BEFORE YOU DIG 1-800-424-5555 "It's the Law" NORTHWEST UTILITIES NOTIFICATION CENTER

PAMELA K. E. WEIEMANN STATE OF WASHINGTON 22440 REGISTERED PROFESSIONAL ENGINEER
EXPIRES AUG. 31, 2005

otak Incorporated
700 Washington St. Suite 401
Vancouver, WA 98660
Phone: (360) 737-9813
FAX: (360) 737-9651

DESIGN & ENGINEERING DIVISION
NE 63RD STREET IMPROVEMENTS

TYPICAL ROAD SECTIONS

proud past, promising future
CLARK COUNTY WASHINGTON

V: SHERYL 08/24/04 6:14pm --> V:\PROJECT\11900\11944\DWG\C9145005.DWG

EF LIST
cale: 1
solved
44x001_border
W WASH
resolved
78X001

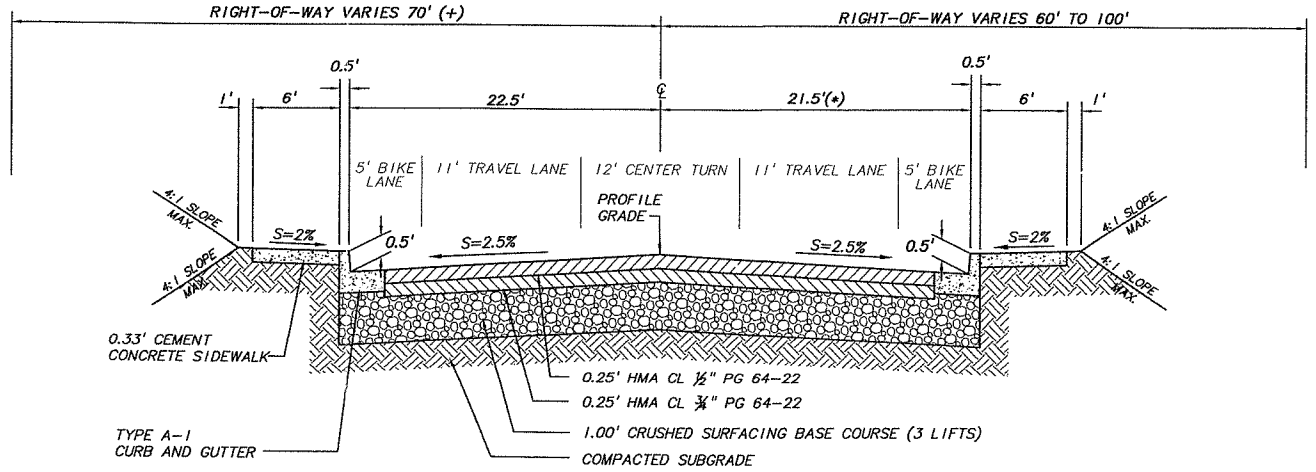

N.E. 63RD STREET

N.T.S.

STATION 78+85.00 TO STATION 85+10.90

SECTION NOTES:

(*) BEGIN CURB TAPER; STATION 78+80.00, 23.0' RT.
END CURB TAPER; STATION 79+30.00, 21.5' RT.

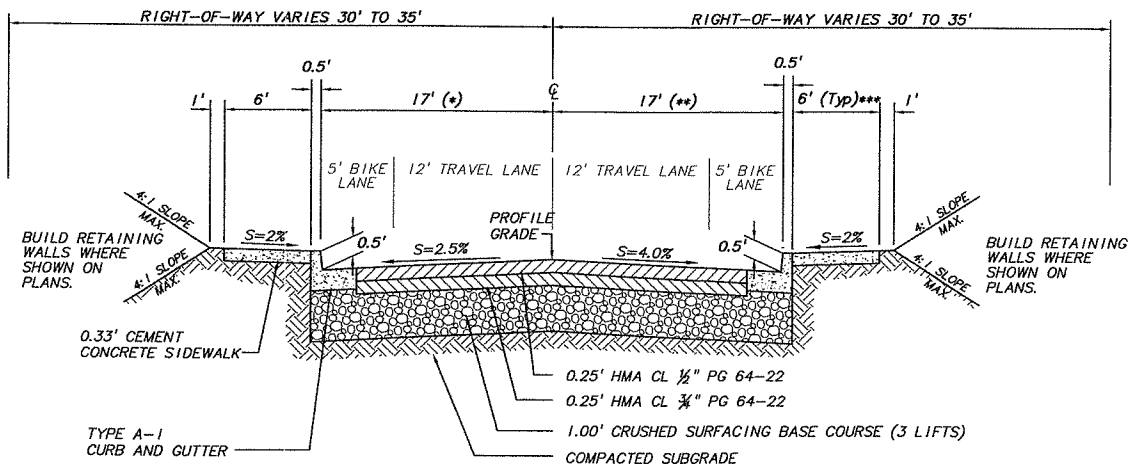

SECTION NOTES:

(*) BEGIN CURB TAPER; STATION 25+38.48 23.0' LT.
END CURB TAPER; STATION 27+18.41, 17.0' LT.

(**) BEGIN CURB TAPER; STATION 25+38.44 23.0' RT.
END CURB TAPER; STATION 27+18.41, 17.0' RT.

(***) CONSTRUCT 8' SIDEWALK:
STATION 25+37.11 TO STATION 27+16.34 RT

N.E. 72ND AVENUE

N.T.S.

STATION 25+38.40 TO STATION 28+20.00

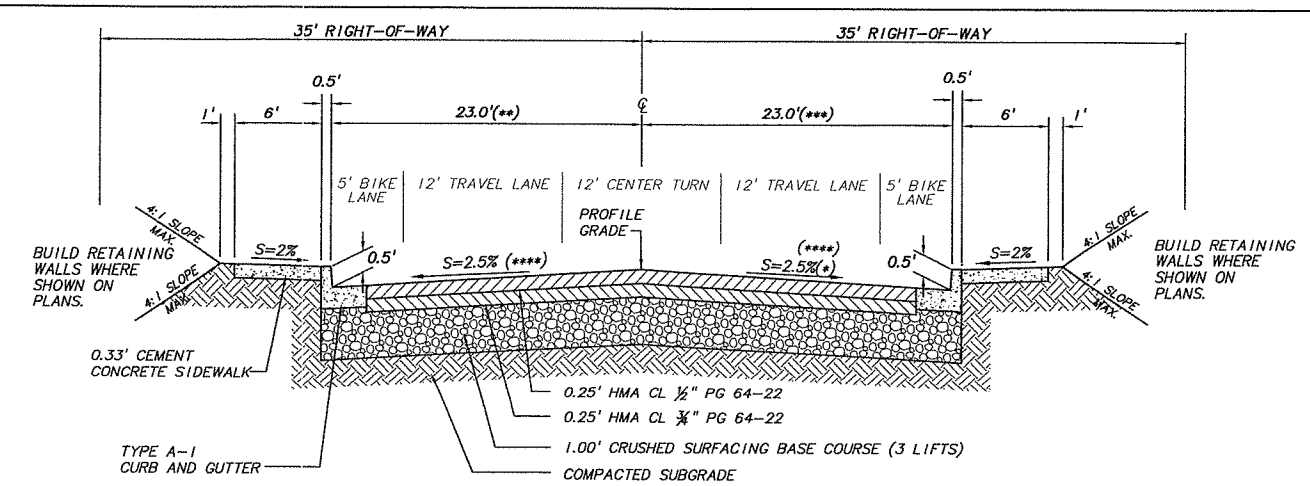

N.E. 72ND AVENUE

N.T.S.

STATION 19+45.00 TO STATION 25+38.40

SECTION NOTES:

(*) TRANSITION CROSS SLOPE TO 4.0%
STATION 24+50.00 TO STATION 25+00.00

(**) BEGIN CURB TAPER; STATION 19+85.05, 19.0' LT
END CURB TAPER; STATION 21+03.80, 23.0' LT

(***) BEGIN CURB TAPER; STATION 18+45.55, 28.0' RT
END CURB TAPER; STATION 18+96.80, 23.0' RT

(****) ADJUST CROSS SLOPES AT 63RD STREET
INTERSECTION AS SHOWN ON PLANS

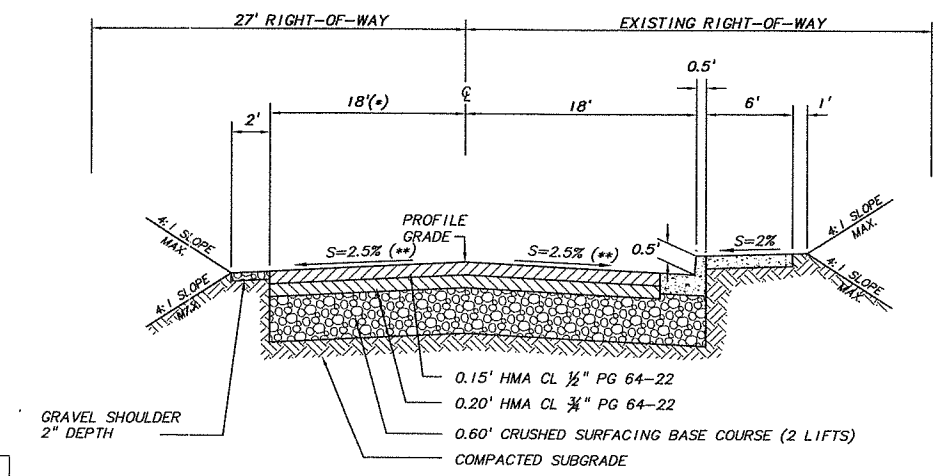

N.E. 81ST AVENUE

N.T.S.

SECTION NOTES:

(*) BEGIN EDGE OF PAVEMENT TAPER; STATION 8+64.84, 7.18' LT.
END EDGE OF PAVEMENT TAPER; STATION 9+41.64, 18.00' LT.

(**) WARP CROSS SLOPES TO MATCH EXISTING
CROSS SLOPES AT STATION 8+75.00

GENERAL NOTES:

1. PLANTER AREAS TO BE BACKFILLED WITH 4" DEPTH BARK MULCH OVER 12" DEPTH TOPSOIL TYPE A.
2. ALL CURBS PER CLARK COUNTY STANDARD DETAILS. SEE SIDEWALK DETAIL, DWG. NO. D02.
3. CONTRACTOR TO MAINTAIN 5' MIN. CLEARANCE IN SIDEWALK AROUND MAILBOXES AND OTHER PERMANENT SIDEWALK OBSTRUCTIONS. SEE DETAIL ON SHEET D01
4. NE 63RD PAVEMENT SECTION TO EXTEND TO END OF CURB RETURNS ON SIDESTREETS

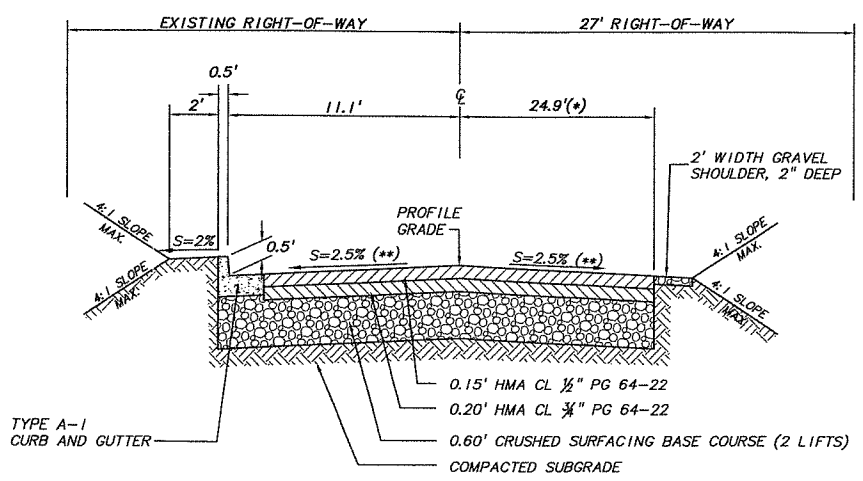

SECTION NOTES:

(*) BEGIN EDGE OF PAVEMENT TAPER; STATION 8+85.22, 8.85' RT.
END EDGE OF PAVEMENT TAPER; STATION 9+42.87, 24.87' RT.

(**) WARP CROSS SLOPES TO MATCH EXISTING
CROSS SLOPES AT STATION 9+00.00

N.E. 87TH AVENUE

N.T.S.

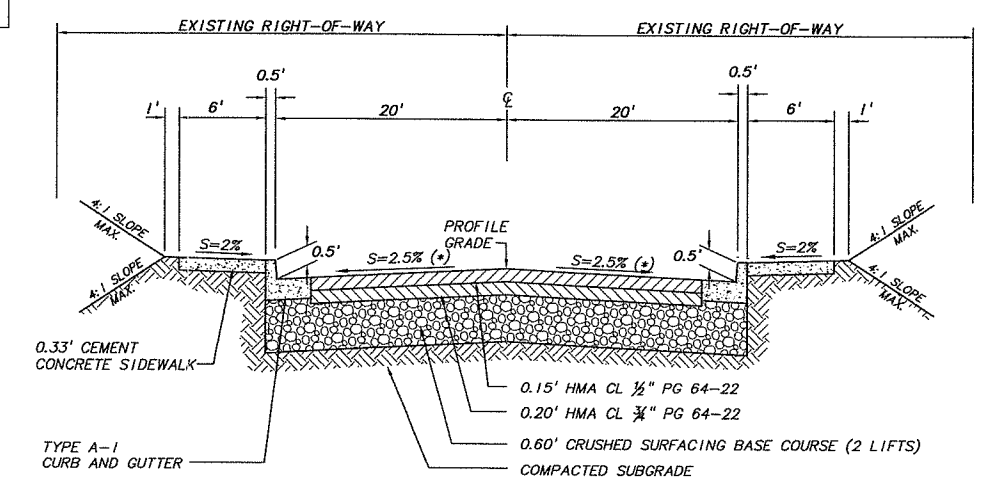

N.E. 88TH AVENUE

N.T.S.

SECTION NOTES:

(*) WARP CROSS SLOPES TO MATCH EXISTING
CROSS SLOPES AT STATION 10+75.00

NOT FOR CONSTRUCTION

DESIGNED:	SLW
DRAWN:	GME
CRP:	330422
HORIZ.	NA
VERT.	NA
DATE.	8/27/2004
DWG:	TS2
SHEET	7 OF 81

CALL 48 HOURS BEFORE YOU DIG 1-800-424-5555 "It's the Law" NORTHWEST UTILITIES NOTIFICATION CENTER

STATE OF WASHINGTON PAMELA M.T.E.L. WIEDEMANN 27402 REGISTERED PROFESSIONAL ENGINEER EXPIRES AUG. 31, 2005

otak Incorporated
700 Washington St. Suite 401
Vancouver, WA 98660
Phone: (360) 737-9613
FAX: (360) 737-9651

DESIGN & ENGINEERING DIVISION
NE 63RD STREET IMPROVEMENTS

TYPICAL ROAD SECTIONS

proud past, promising future
CLARK COUNTY WASHINGTON

V: SHERYL 08/24/04 6:14pm --> V:\PROJECT\11900\11844\DWG\C9445006.DWG

REF LIST
scale: 40
resolved
944x001_border
944x500
944x600
KW WASH
944B101
944b104
944b106
944B200

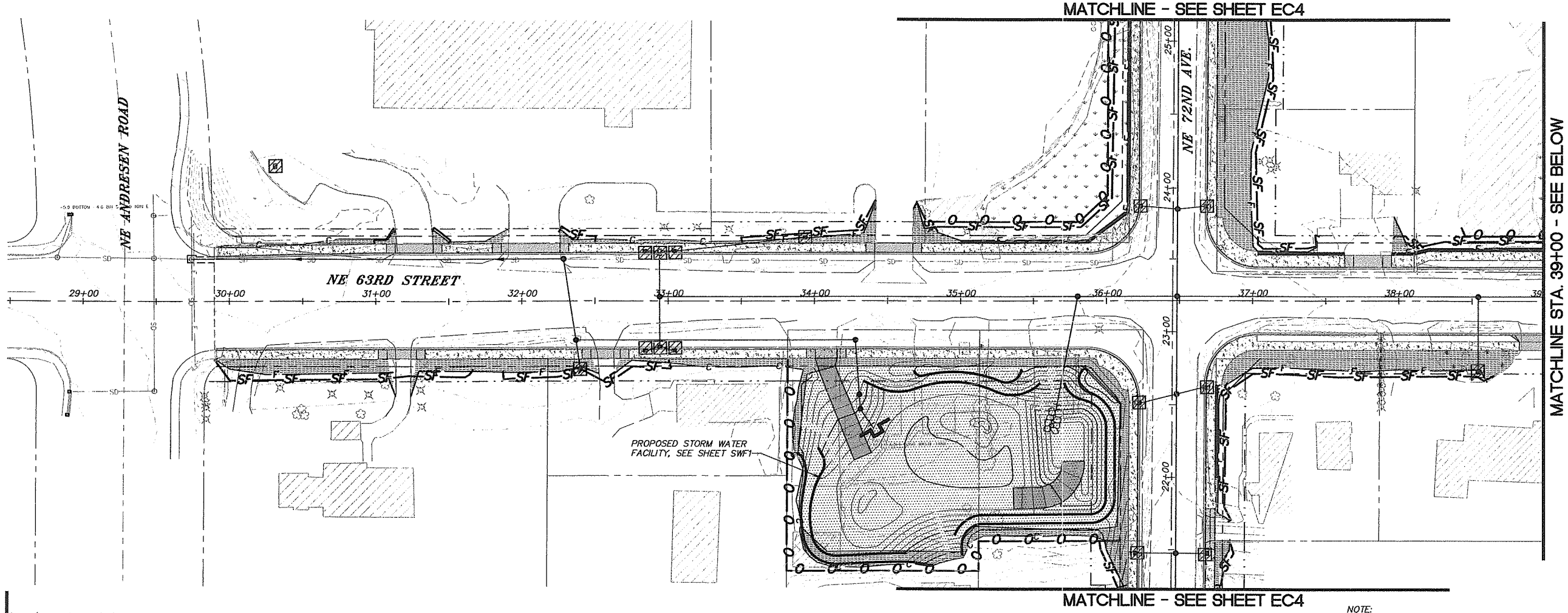

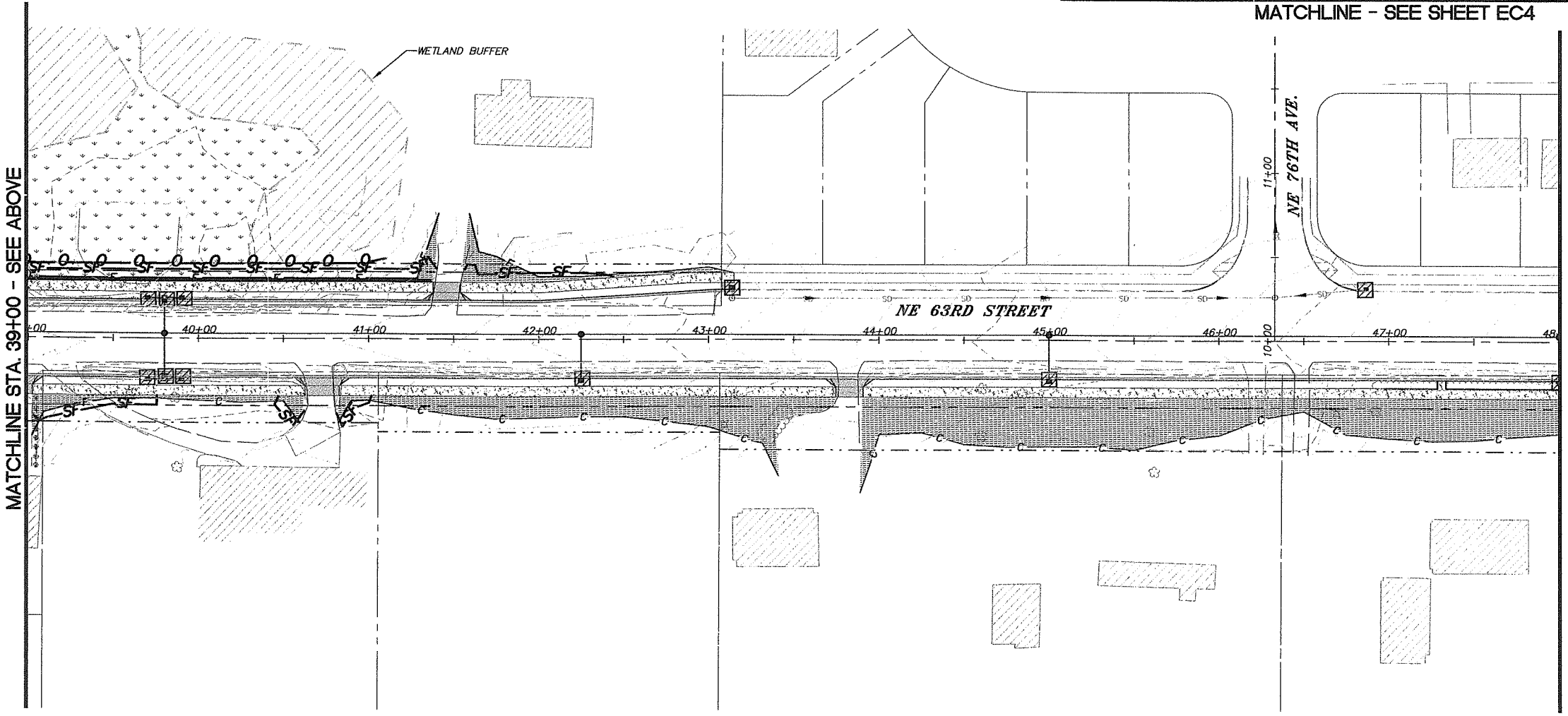

NOTE:
SIGNIFICANT VARIATION AND DEGREE OF EROSION CONTROL EFFORT WILL BE DICTATED BY WEATHER CONDITIONS. THE CONTRACTOR SHOULD BE PREPARED TO PROVIDE EXTRA EROSION CONTROL PROVISIONS AND EFFORT DURING WINTER AND WET WEATHER CONDITIONS BEYOND THAT NORMALLY REQUIRED DURING SUMMER AND DRY WEATHER CONDITIONS. FINE GRAINED AND UNCONSOLIDATED SOILS ON SLOPING SITES MAY BECOME UNSTABLE WHEN SUBJECT TO EXCESSIVE MOISTURE.

EROSION CONTROL LEGEND

- SEEDING AND MULCHING FOR STORM WATER FACILITY
- SEEDING AND MULCHING
- INLET PROTECTION SEE DETAIL ON DWG EC5.
- CHECK DAM (STRAW WADDLE OR ROCK)
- SF — SF — SEDIMENT FENCE
- F — / — C — DAYLIGHT LINE
- O — O — CONSTRUCTION FENCE
- RIPRAP FOR OUTFALL PROTECTION.
- AC DRIVEWAY APPROACH
- NEW SIDEWALK
- EXISTING WETLAND
- WETLAND BUFFER

NOTES:

1. CONTRACTOR TO PROVIDE EROSION CONTROL PROTECTION ON ALL DOWN FLOW INLETS/DITCHS AND PARKING LOT INLETS AS NEEDED OR DIRECTED.
2. SEE PLANS AND SPECIAL PROVISIONS FOR PLANTER STRIP DETAILS.

SCALE IN FEET
20 0 20 40

DESIGNED:	PKW
DRAWN:	GME
CRP:	330422
HORIZ.	1" = 40'
VERT.	NA
DATE:	8/27/2004
DWG:	EC1
SHEET	8 OF 81

CALL 48 HOURS BEFORE YOU DIG
1-800-424-5555
"It's the Law"
NORTHWEST UTILITIES NOTIFICATION CENTER

PAMELA K. WIEDEMANN
STATE OF WASHINGTON
27440
PROFESSIONAL ENGINEER
EXPIRES AUG. 31, 2005

otak Incorporated
700 Washington St. Suite 401
Vancouver, WA 98660
Phone: (360) 737-9613
FAX: (360) 737-9651

DESIGN & ENGINEERING DIVISION
NE 63RD STREET IMPROVEMENTS

EROSION CONTROL PLAN

NOT FOR CONSTRUCTION

proud past, promising future
CLARK COUNTY WASHINGTON

V: SHERYL 08/24/04 6:17pm --> V:\PROJECT\11900\11944\DWG\C9445007.DWG

V: SHERYL 08/24/04 6:18pm --> V:\PROJECT\11900\11944\DWG\C944S008.DWG

REF LIST
==========
tscale: 40
---
esolved

944x001_border
944x500
KW WASH
944b101
944b104
944b106
944B200

MATCHLINE STA. 58+50 -SEE ABOVE

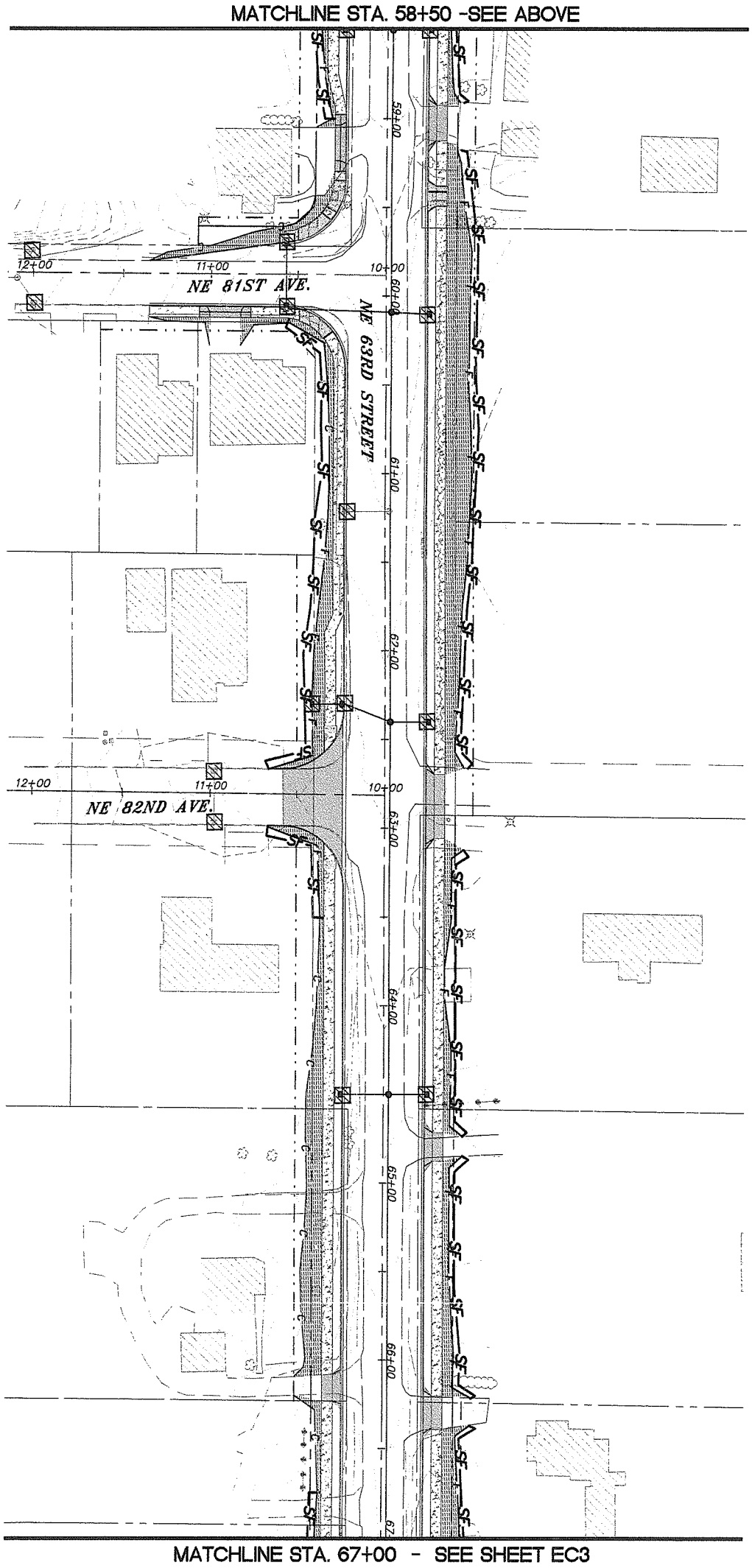

MATCHLINE STA. 67+00 - SEE SHEET EC3

MATCHLINE STA. 48+00 - SEE SHEET EC1

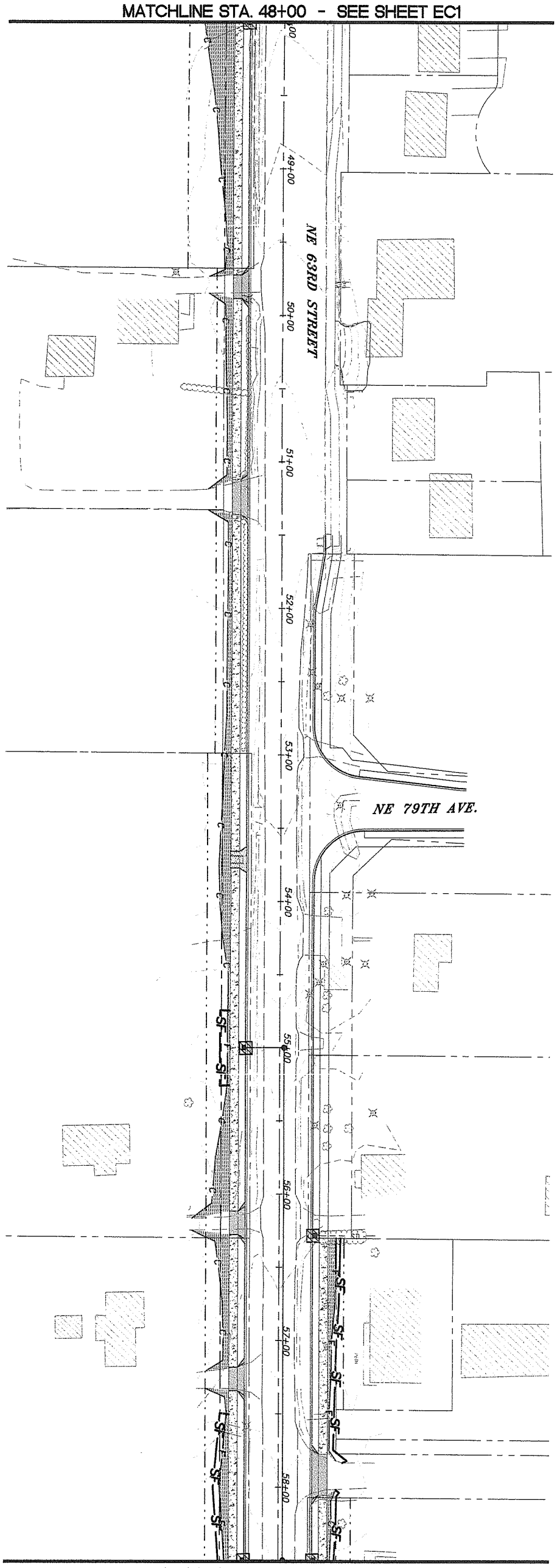

MATCHLINE STA. 58+50 - SEE BELOW

SCALE IN FEET
20 0 20 40

NOTE:
SIGNIFICANT VARIATION AND DEGREE OF EROSION CONTROL EFFORT WILL BE DICTATED BY WEATHER CONDITIONS. THE CONTRACTOR SHOULD BE PREPARED TO PROVIDE EXTRA EROSION CONTROL PROVISIONS AND EFFORT DURING WINTER AND WET WEATHER CONDITIONS BEYOND THAT NORMALLY REQUIRED DURING SUMMER AND DRY WEATHER CONDITIONS. FINE GRAINED AND UNCONSOLIDATED SOILS ON SLOPING SITES MAY BECOME UNSTABLE WHEN SUBJECT TO EXCESSIVE MOISTURE.

EROSION CONTROL LEGEND

- SEEDING AND MULCHING.
- INLET PROTECTION SEE DETAIL ON DWG EC5.
- CHECK DAM (STRAW WADDLE OR ROCK)
- SF — SEDIMENT FENCE
- F — / — C — DAYLIGHT LINE
- RIPRAP FOR OUTFALL PROTECTION.
- AC DRIVEWAY APPROACH
- NEW SIDEWALK

NOTES:

1. CONTRACTOR TO PROVIDE EROSION CONTROL PROTECTION ON ALL DOWN FLOW INLETS/DITCHS AND PARKING LOT INLETS AS NEEDED OR DIRECTED.
2. SEE PLANS AND SPECIAL PROVISIONS FOR PLANTER STRIP DETAILS.

NOT FOR CONSTRUCTION

proud past, promising future
CLARK COUNTY
WASHINGTON

DESIGN & ENGINEERING DIVISION
NE 63RD STREET IMPROVEMENTS

EROSION CONTROL PLAN

otak Incorporated
700 Washington St., Suite 401
Vancouver, WA 98660
Phone: (360) 737-9613
FAX: (360) 737-9651

PAMELA KIEL WIEDEMANN
STATE OF WASHINGTON
22440
REGISTERED PROFESSIONAL ENGINEER
EXPIRES:AUG. 31, 2005

CALL 48 HOURS BEFORE YOU DIG
1-800-424-5555
"It's the Law"
NORTHWEST UTILITIES NOTIFICATION CENTER

DESIGNED:	PKW
DRAWN:	GME
CRP:	330422
HORIZ.	1" = 40'
VERT.	NA
DATE:	8/27/2004
DWG:	EC2
SHEET	9 OF 81

V: SHERYL 08/24/04 6:19pm --> V:\PROJECT\11900\11944\DWG\C9445009.DWG

:REF LIST
:xscale: 40
:resolved
:944x001_border
:9444500
:KW WASH
:9444B101
:9445104
:9445106
:9448200

MATCHLINE STA. 77+50 - SEE ABOVE

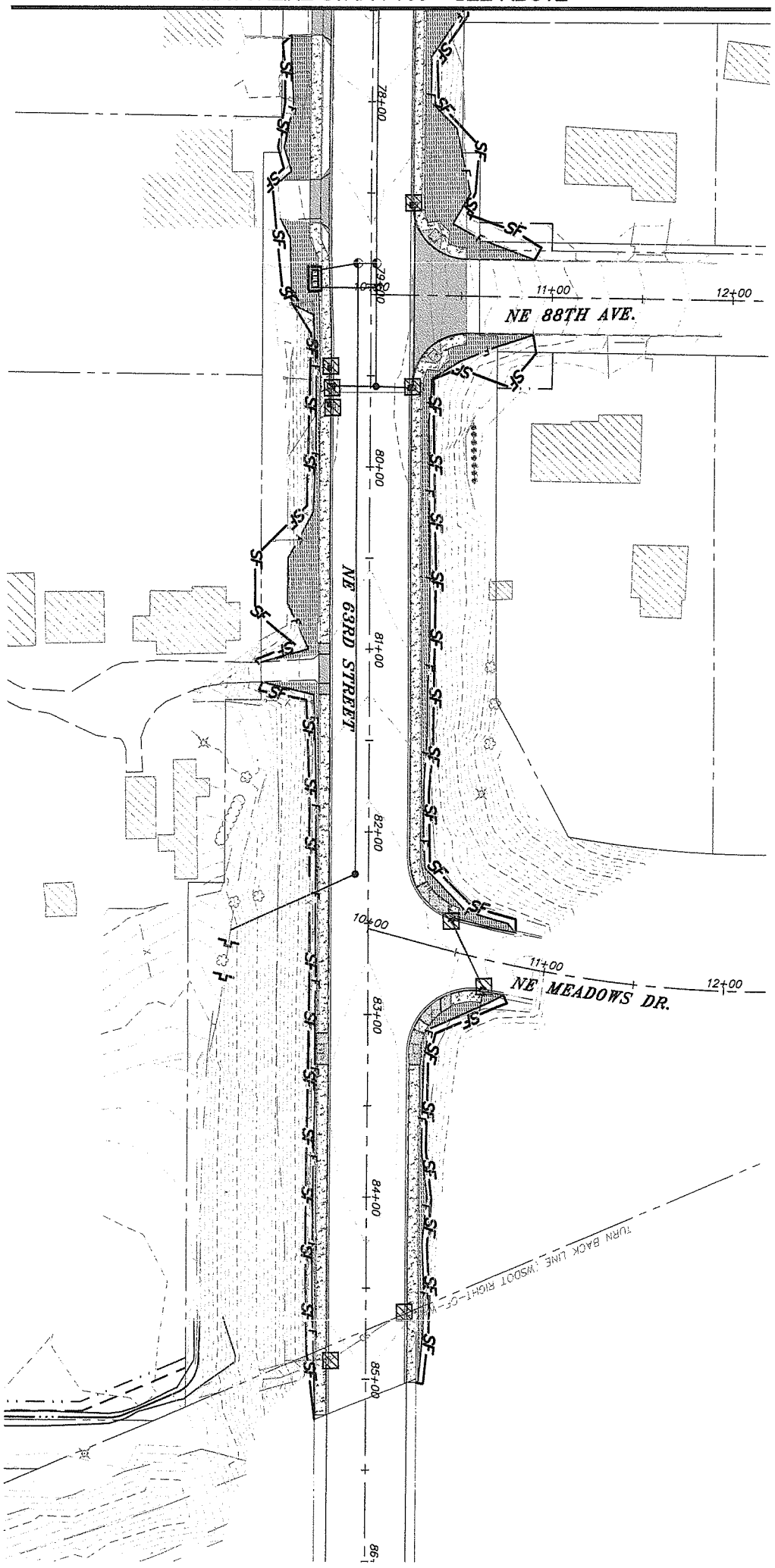

MATCHLINE STA. 67+00 - SEE SHEET EC2

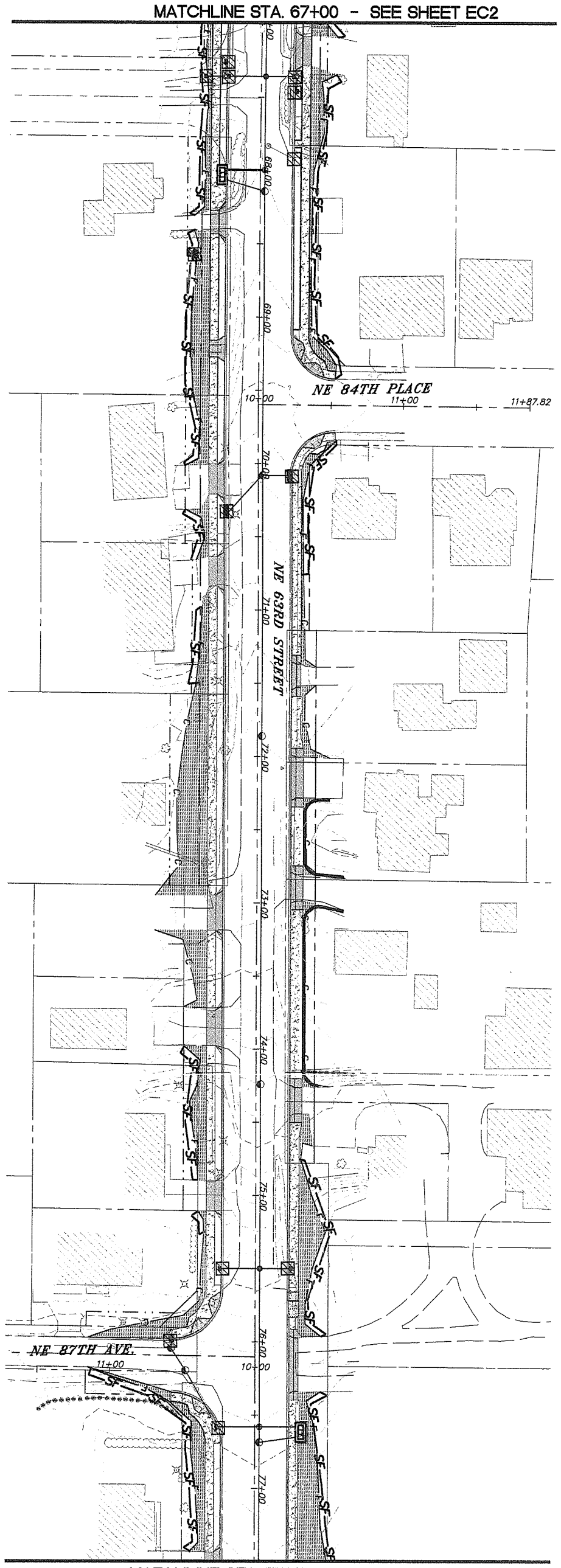

MATCHLINE STA. 77+50 - SEE BELOW

SCALE IN FEET
20 0 20 40

NOTE:
SIGNIFICANT VARIATION AND DEGREE OF EROSION CONTROL EFFORT WILL BE DICTATED BY WEATHER CONDITIONS. THE CONTRACTOR SHOULD BE PREPARED TO PROVIDE EXTRA EROSION CONTROL PROVISIONS AND EFFORT DURING WINTER AND WET WEATHER CONDITIONS BEYOND THAT NORMALLY REQUIRED DURING SUMMER AND DRY WEATHER CONDITIONS. FINE GRAINED AND UNCONSOLIDATED SOILS ON SLOPING SITES MAY BECOME UNSTABLE WHEN SUBJECT TO EXCESSIVE MOISTURE.

EROSION CONTROL LEGEND

- SEEDING AND MULCHING.
- INLET PROTECTION SEE DETAIL ON DWG EC5.
- CHECK DAM (STRAW WADDLE OR ROCK)
- —SF—SF— SEDIMENT FENCE
- —F—/—C— DAYLIGHT LINE
- RIPRAP FOR OUTFALL PROTECTION.
- AC DRIVEWAY APPROACH
- NEW SIDEWALK

NOTES:

1. CONTRACTOR TO PROVIDE EROSION CONTROL PROTECTION ON ALL DOWN FLOW INLETS/DITCHS AND PARKING LOT INLETS AS NEEDED OR DIRECTED.
2. SEE PLANS AND SPECIAL PROVISIONS FOR PLANTER STRIP DETAILS.

NOT FOR CONSTRUCTION

proud past, promising future
CLARK COUNTY
WASHINGTON

DESIGN & ENGINEERING DIVISION
NE 63RD STREET IMPROVEMENTS

EROSION CONTROL PLAN

otak Incorporated
700 Washington St., Suite 401
Vancouver, WA 98660
Phone: (360) 737-9613
FAX: (360) 737-9651

PAMELA KIEL WIEDEMANN
STATE OF WASHINGTON
22440
REGISTERED PROFESSIONAL ENGINEER
EXPIRES:AUG. 31, 2005

CALL 48 HOURS BEFORE YOU DIG
1-800-424-5555
"It's the Law"
NORTHWEST UTILITIES NOTIFICATION CENTER

DESIGNED:	PKW
DRAWN:	GME
CRP:	330422
HORIZ.	1" = 40'
VERT.	NA
DATE:	8/27/2004
DWG:	EC3
SHEET	10 OF 81

:REF_LIST
:tscale: 40
:resolved
:944x001_border
:944x500
:KW WASH
:944B101
:944b104
:944b106
:944B200

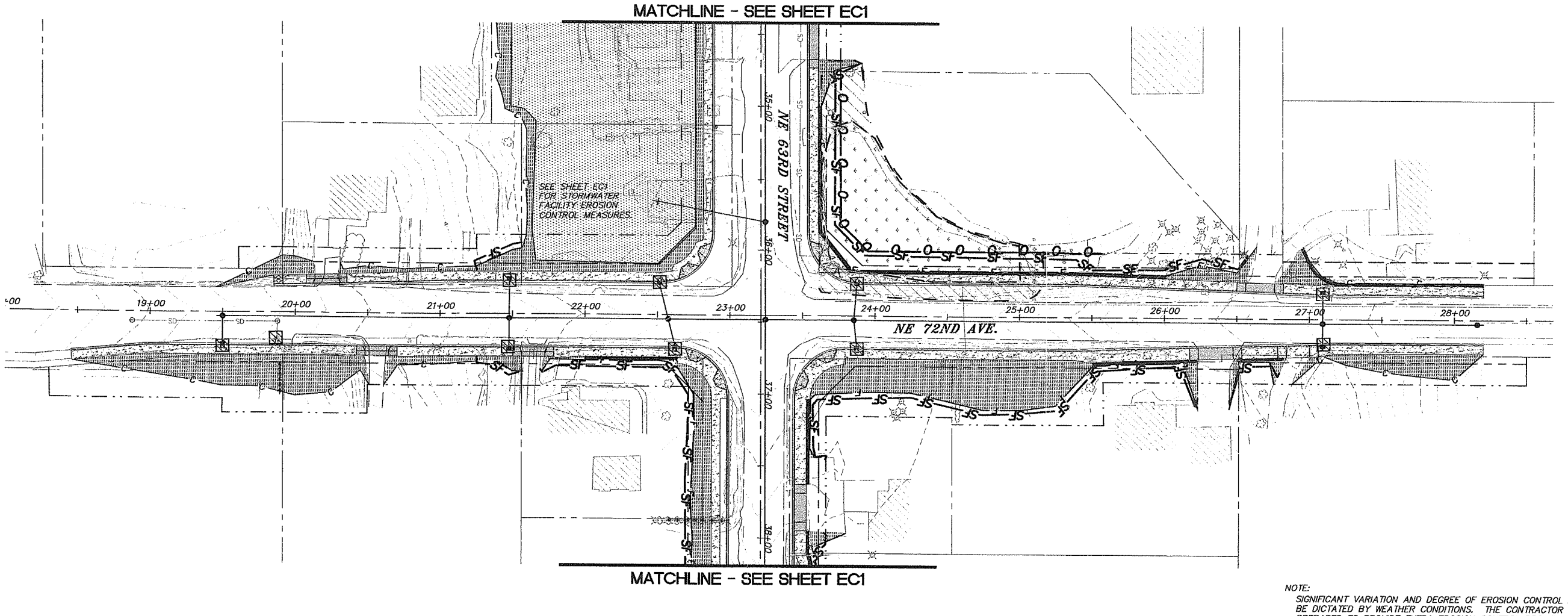

SCALE IN FEET
20 0 20 40

NOTE:
SIGNIFICANT VARIATION AND DEGREE OF EROSION CONTROL EFFORT WILL BE DICTATED BY WEATHER CONDITIONS. THE CONTRACTOR SHOULD BE PREPARED TO PROVIDE EXTRA EROSION CONTROL PROVISIONS AND EFFORT DURING WINTER AND WET WEATHER CONDITIONS BEYOND THAT NORMALLY REQUIRED DURING SUMMER AND DRY WEATHER CONDITIONS. FINE GRAINED AND UNCONSOLIDATED SOILS ON SLOPING SITES MAY BECOME UNSTABLE WHEN SUBJECT TO EXCESSIVE MOISTURE.

EROSION CONTROL LEGEND

- SEEDING AND MULCHING.
- INLET PROTECTION SEE DETAIL ON DWG EC5.
- CHECK DAM (STRAW WADDLE OR ROCK)
- —SF——SF— SEDIMENT FENCE
- —O——O— CONSTRUCTION FENCE
- —F——/——C— DAYLIGHT LINE
- RIPRAP FOR OUTFALL PROTECTION.
- AC DRIVEWAY APPROACH
- NEW SIDEWALK

NOTES:

1. CONTRACTOR TO PROVIDE EROSION CONTROL PROTECTION ON ALL DOWN FLOW INLETS/DITCHS AND PARKING LOT INLETS AS NEEDED OR DIRECTED.
2. SEE PLANS AND SPECIAL PROVISIONS FOR PLANTER STRIP DETAILS.

NOT FOR CONSTRUCTION

DESIGNED:	PKW
DRAWN:	GME
CRP:	330422
HORIZ.	1" = 40'
VERT:	NA
DATE:	8/27/2004
DWG:	EC4
SHEET	11 OF 81

CALL 48 HOURS BEFORE YOU DIG
1-800-424-5555
"It's the Law"
NORTHWEST UTILITIES NOTIFICATION CENTER

PAMELA K.E. WIEDEMANN
STATE OF WASHINGTON
21240
REGISTERED PROFESSIONAL ENGINEER
EXPIRES AUG. 31, 2005

oak
Incorporated
700 Washington St., Suite 401
Vancouver, WA 98660
Phone: (360) 737-9613
FAX: (360) 737-9651

DESIGN & ENGINEERING DIVISION
NE 63RD STREET IMPROVEMENTS

EROSION CONTROL PLAN

proud past, promising future
CLARK COUNTY
WASHINGTON

V: SHERYL 08/24/04 6:20pm --> V:\PROJECT\11900\11944\DWG\C944S009B.DWG

V: SHERYL 08/24/04 6:20pm --> V:\PROJECT\11900\11944\DWG\C944S010.DWG

STANDARD NOTES FOR EROSION CONTROL PLAN

1. The Contractor shall install and maintain BMP's as shown and perform all actions necessary to prevent erosion, and control sediment from leaving the construction site. Site Contractor shall comply with Clark County Code Chapter 40.380.050.

2. All erosion control measures shall be in-place and in working condition prior to disturbing and exposing any soil surfaces (i.e. silt fence, construction entrance, sedimentation barriers, sedimentation traps).

3. All erosion prevention and control BMP's shall be maintained and repaired as needed to insure continued performance of their intended function. Needed repairs shall be made as soon as practicable. They are to remain in place and operational during all phases of construction. Construction activities shall not continue or resume until repairs to erosion control facilities are made and the facilities are functional. Any sediment leaving the site or discharging to a sensitive area shall be stopped and controlled immediately. Contaminated areas shall be cleaned and restored.

4. Clearing limits and work area limits shall be delineated and marked. Do not disturb more area than needed for construction requirements.

5. All sensitive or critical areas (wetlands, steep slopes, natural waterways), and buffers shall all be clearly delineated and clearly marked, and protected from sediment deposition.

6. Sediment laden runoff shall be prevented from entering all existing storm water catch basins and inlets affected by construction.

7. No exposed, bare soils shall remain unstabilized for more than two days during the period October 1 thru April 30 or for more than seven days during the period of May 1 through September 30. All disturbed soil surfaces shall be stabilized by a suitable application of "Best Management Practices".

8. Where feasible, no more than 500 feet of trench shall be open at one time. Excavated material shall be placed on the up-hill side of trenches provided it does not conflict with safety requirements.

9. Dewatering devices shall discharge into a sediment trap or sediment pond. No discharge shall be made to a paved street or stormwater collection system without first removing sediment.

10. Cut and fill slopes shall be constructed in a manner that will minimize erosion. Erosion shall be controlled and prevented by such measures as roughening the surface, installation of interceptor ditches, terracing, covering with matting, mulch or plastic sheeting. Runoff shall be prevented from entering a slope and from undercutting the base of slopes.

11. Any soil or debris transported onto roadways and sidewalks shall be removed. Deposits shall be completely removed by shoveling and/or sweeping. Washing shall not be utilized unless specifically approved in writing by the County.

12. All permanent infiltration systems shall be isolated and protected from sediment laden runoff entering to avoid risk of reducing the ability of the systems to infiltrate. Isolation and protection shall not be removed until the drainage area tributary to the system is completely stabilized.

CONTINUED ON SHEET 2

DWG: ECN1.DWG | Department of Public Works, CLARK COUNTY WASHINGTON, proud past, promising future | STANDARD NOTES FOR EROSION CONTOL PLAN | APPROVED 01/01/04 | COUNTY ENGINEER | STANDARD ECN1

STANDARD NOTES FOR EROSION CONTROL PLAN (CONTINUED)

13. All conveyance channels, both temporary and permanent shall be stabilized to prevent erosion of the channel. Stabilization shall extend to areas at outlets and downstream reaches vulnerable to erosion resulting from flow discharging from the channel.

14. If BMP's shown are utilized but are insufficient to prevent sediment from reaching water bodies, adjacent properties, or public rights-of-way; additional BMP's shall be implemented immediately to prevent further encroachment of sediment.

15. Stabilized areas shall be provided for employee parking and storage of construction materials. Erodeable stockpiles of earthen materials, such as topsoil, silty and clayey soils; and landscape materials, shall be covered when not being incorporated in the work. Erosion control BMP's shall be utilized as necessary to prevent sediment laden runoff from leaving or sediment being transported from these areas from vehicle activity.

16. All pollutants other than sediment that occur during construction shall be handled and disposed of in a manner that does not cause contamination of storm water.

17. The Contractor shall keep an inspection log of the condition of the erosion control facilities. Erosion control facilities shall be inspected at least weekly and after each rainfall. The inspection log shall be kept at the project site at a designated location and shall be available for review by the County. An individual that has successfully completed the County's Erosion Control Certification course shall perform inspections and maintain the log.

18. All temporary BMP's shall be removed within 30 days after final site stabilization is achieved. Trapped sediment shall be deposited and stabilized on site. Areas disturbed resulting from removal shall be permanently stabilized.

19. Construction shall not be considered complete and acceptable until all disturbed soil surfaces have been protected from erosion with permanent landscaping, covering with impervious surfaces, restored to original undisturbed condition or permanently stabilized.

20. Vegetated stabilization and landscaping shall be fertilized, watered and maintained to insure that growth of vegetation is established and sustained.

21. During dry weather construction periods the contractor shall provide project-specific dust control measures that may include; Seeding, Mulching, Matting, Water, Tackifier, or Chemical Soil Stabilizers. The contractor shall maintain the dust control measures through dry weather periods until all disturbed areas have been stabilized. Immediately re-stabilize areas disturbed by contractor's operations or other activities (wind, water, vandalism, etc.).

22. Entry onto the construction site shall be restricted to a single approved entrance as shown on the plan.

23. Maintenance and repair of heavy equipment and vehicles which involve potential contaminants (oil,solvents,hydraulic fluid, etc.) must be conducted in a manner which prevents contamination of soils, surface water and ground water. Tarps, drip pans, or other appropriate measures shall be used as necessary.

24. Stripping, topsoil, and unsuitable material stockpiles shall be hydroseeded with "regreen wheat x wheat grass hybrid" by Hobbs and Hobkins (or approved equal). Maintenance of stockpile areas and reapplication of hydroseed covering shall be required if bare soil is present. During winter and wet weather conditions, stockpiles shall be covered with plastic sheeting per detail E-16.

SHEET 2 OF 2

DWG: ECN2.DWG | Department of Public Works, CLARK COUNTY WASHINGTON, proud past, promising future | STANDARD NOTES (CONTINUED) FOR EROSION CONTOL PLAN | APPROVED 01/01/04 | COUNTY ENGINEER | STANDARD ECN2

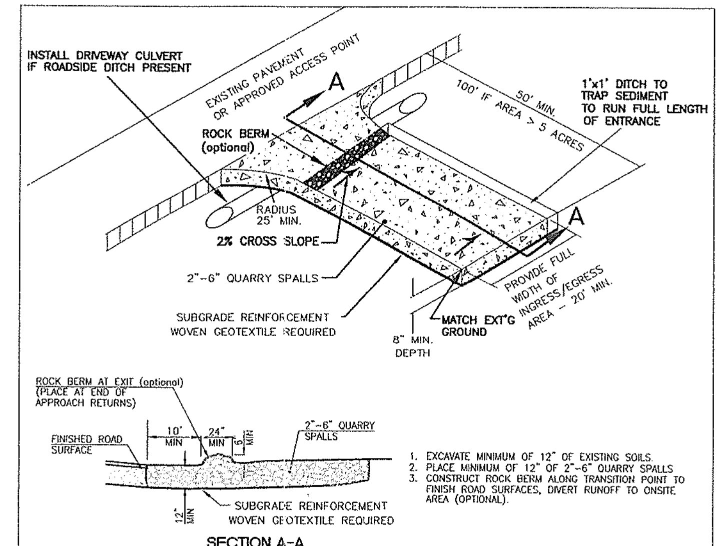

NOTES:

1. FOR DEVELOPMENT PROJECTS REVIEWED BY ENGINEERING SERVICES. NOT FOR USE WITH SINGLE FAMILY OR DUPLEX RESIDENTIAL BUILDING PERMITS. SEE BUILDING DEPT. FOR GRAVEL CONSTRUCTION ENTRANCE PLAN.
2. INSTALL WOVEN GEOTEXTILE FABRIC TO PREVENT SUB-SOIL PUMPING.
3. VEHICLE WASHDOWN AREA, IF REQUIRED, IS TO BE INSTALLED AND USED TO REMOVE SEDIMENT FROM VEHICLES THAT ARE ABOUT TO ENTER AN ESTABLISHED ROAD.
4. WASHDOWN AREA TO BE MADE UP OF CLEAN 2"- 6" QUARRY SPALLS, 1" DEEP (MIN) OVER WOVEN GEOTEXTILE FABRIC. WASHDOWN AREA TO BE FULL WIDTH OF ENTRANCE AND 50' (MIN.), AND 100' IF EXPOSED SOIL IS OVER 5 ACRES.
5. AT TIME OF PRECONSTRUCTION MEETING, THE COUNTY INSPECTOR MAY REQUIRE THE ENTRANCE TO BE PAVED TO THE EDGE OF THE RIGHT-OF-WAY PRIOR TO THE INSTALLATION OF A WASHDOWN ENTRANCE TO AVOID DAMAGE TO THE EXISTING ROADWAY.
6. THE RESPONSIBLE EROSION CONTROL INDIVIDUAL IS TO ENSURE THAT ALL VEHICLES USE THIS ENTRANCE AND ARE TO BE INSPECTED AND CLEANED OF SOILS BEFORE LEAVING PROJECT, AND THAT THE ENTRANCE IS TO BE KEPT CLEAN AT ALL TIMES.

DWG: E-1.DWG | Department of Public Works, CLARK COUNTY WASHINGTON, proud past, promising future | STANDARD CONSTRUCTION ENTRANCE | APPROVED 01/01/04 | COUNTY ENGINEER | STANDARD E-1

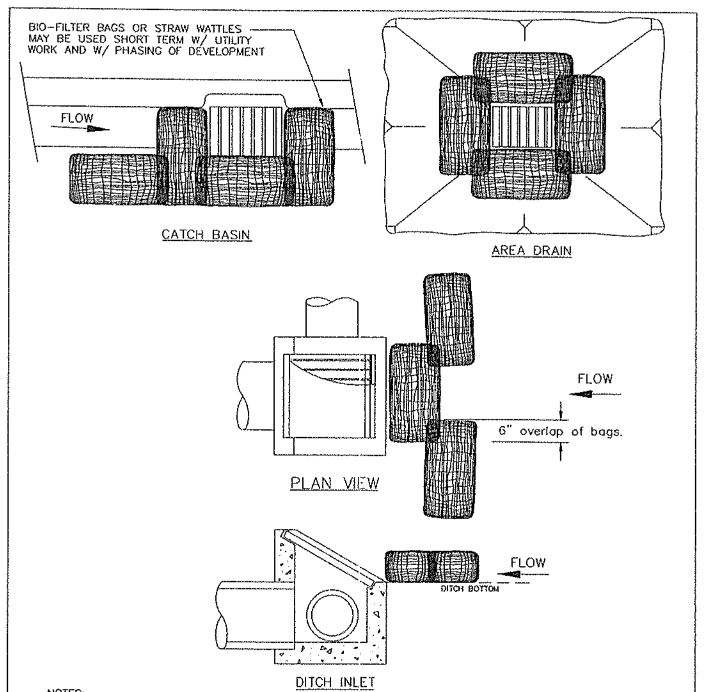

NOTES:

1. ADDITIONAL MEASURES MUST BE CONSIDERED DEPENDING ON SOIL TYPE.
2. BIO-FILTER BAGS SHOULD BE STAKED WHERE APPLICABLE USING (2) 1"x2" WOODEN STAKES OR APPROVED EQUAL PER BAG.
3. STRAW WATTLES MUST BE STABILIZED BY ATTACHING WIRE CLIPS TO THE CATCH BASIN PER MANUFACTURES SPECIFICATIONS.
4. INLET PROTECTION MUST BE REGULARLY INSPECTED BY THE EROSION CONTROL INDIVIDUAL TO INSURE PROPER PLACEMENT/FUNCTION AND MAINTENANCE.
5. SEE INLET PROTECTION NOTES STD. PLAN E-3

DWG: E-3c.DWG | Department of Public Works, CLARK COUNTY WASHINGTON, proud past, promising future | INLET PROTECTION TYPE 4 BIOFILTER BAGS | APPROVED 01/01/04 | COUNTY ENGINEER | STANDARD E-3c

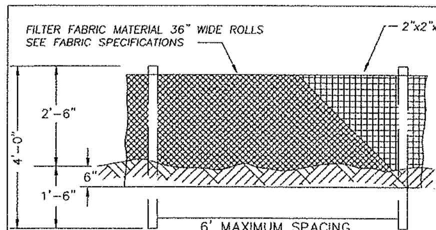

SEDIMENT FENCE FABRIC SPECIFICATIONS (Woven Polypropylene sediment fence fabric)

PROPERTY	TEST PROCEDURE	MIN. FABRIC VALUE
Grab Tensile Strength	ASTM D-4632	180 lbs.
Grab elongation	ASTM D-4632	15%
trapezoid Tear	ASTM D-4533	70 lbs.
Mullen Burst	ASTM D-3786	300 psi.
Puncture	ASTM D-4833	80 lbs.
Permitivity	ASTM D-4491	0.07 sec-1
Permeability	ASTM D-4491	.005 cm/sec
A.O.S.	ASTM D-4751	50 U.S. Sieve
UV Resistance(500 hrs)	ASTM D-4355	90%

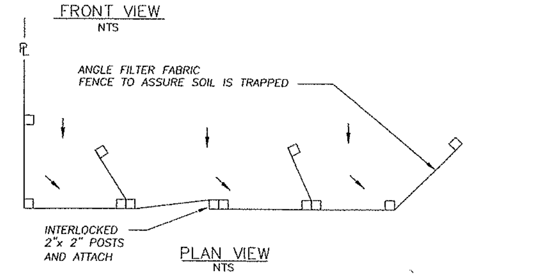

NOTES
1. THIS SEDIMENT BARRIER UTILIZES STANDARD STRENGTH OR EXTRA STRENGTH SYNTHETIC FILTER FABRICS. IT IS DESIGNED FOR SITUATIONS IN WHICH ONLY SHEET OR OVERLAND FLOWS ARE EXPECTED. (SEE FABRIC SPECIFICATIONS ABOVE)
2. BURY BOTTOM OF FILTER FABRIC 6" VERTICALLY BELOW FINISHED GRADE.
3. POST ARE TO BE 2"x2" FIR, PINE OR STEEL FENCE POSTS.
4. POST TO BE INSTALLED ON UPHILL SIDE OF SLOPE.
5. COMPACT BOTH SIDES OF FILTER FABRIC TRENCH.
6. SEDIMENT FENCE TO BE SPACED ON SLOPES PER TABLE BELOW.

INSTALL PARALLEL ALONG CONTOURS AS FOLLOWS		
% SLOPE	SLOPE	MAX. SPACING ON SLOPE
10% FLATTER	10:1 OR FLATTER	300 ft.
10>%<15	10:1>x<7.5:1	150 ft.
15>%<20	7.5:1>x<5:1	100 ft.
20>%<30	5:1>x<3.5:1	50 ft.
30>%<50	3.5:1>x<2:1	25 ft.

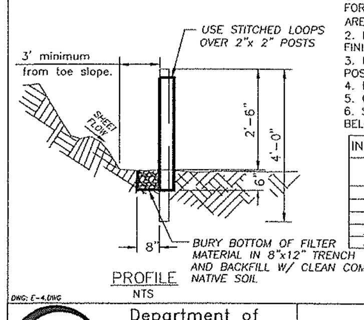

DWG: E-4.DWG | Department of Public Works, CLARK COUNTY WASHINGTON, proud past, promising future | STANDARD SEDIMENT FENCE | APPROVED 01/01/04 | COUNTY ENGINEER | STANDARD E-4

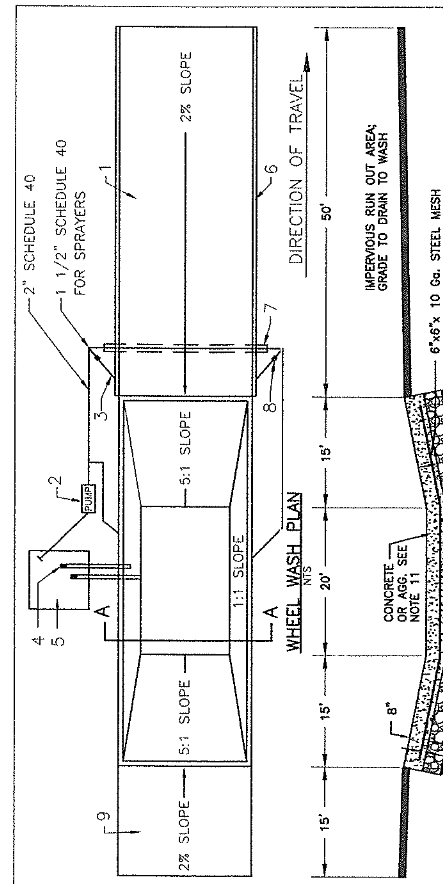

NOTES
1. ASPHALT CONSTRUCTION ENTRANCE, 6" OF ATB.
2. 3" TRASH PUMP WITH FLOATS ON SUCTION HOSE.
3. MIDPOINT SPRAY NOZZLES, IF NEEDED.
4. 6" SEWER PIPE WITH BUTTERFLY VALVES. BOTTOM PIPE IS A DRAIN. LOCATE TOP PIPE'S INVERT 1' ABOVE BOTTOM OF WHEEL WASH.
5. 8'x 8' SUMP WITH 5' OF CATCHMENT. BUILD WITH ABILITY TO CLEAN WITH BACKHOE.
6. ASPHALT CURB ON THE LOW ROAD SIDE TO DIRECT WATER BACK TO POND.
7. 6" SLEEVE UNDER ROAD.
8. BALL VALVES.
9. ATB APRON TO PROTECT FROM SPLASHING WATER.
10. CONTRACTOR TO REMOVE ACCUMULATED SEDIMENT FROM WHEEL WASH; MAY BE PIPED TO AN APPROVED SEDIMENT TRAP.
11. USE GEOTEXTILE FABRIC WITH AGGREGATE FOR A TEMPORARY WHEEL WASH.

DWG: E-15 | Department of Public Works, CLARK COUNTY WASHINGTON, proud past, promising future | WHEEL WASH | APPROVED 01/01/04 | COUNTY ENGINEER | STANDARD E-15

NOT FOR CONSTRUCTION

CLARK COUNTY WASHINGTON — proud past, promising future

DESIGN & ENGINEERING DIVISION
NE 63RD STREET IMPROVEMENTS

EROSION CONTROL DETAILS AND NOTES

otak Incorporated
700 Washington St., Suite 401
Vancouver, WA 98660
Phone: (360) 737-9613
FAX: (360) 737-9651

CALL 48 HOURS BEFORE YOU DIG
1-800-424-5555
"It's the Law"
NORTHWEST UTILITIES NOTIFICATION CENTER

DESIGNED:	PKW
DRAWN:	GME
CRP:	330422
HORIZ.	NA
VERT.	NA
DATE:	8/27/2004
DWG:	EC5
SHEET	12 OF 81

OPEN CUT UTILITY TRENCH BACKFILL DETAIL (COLLECTOR OR ARTERIAL)

SURFACING:

1. All A.C.P. shall be saw cut to provide a straight, clean edge prior to paving.
2. The cut line shall be one continuous straight line from the outer excavation limits of manhole, valve box, etc. to manhole, valve box, etc.
3. Pave with an 0.5 ft. minimum compacted depth A.C.P., or match existing or design section, whichever is greater.
4. Lifts for A.C.P. (Class A) shall be 0.15 ft. minimum and 0.35 ft. maximum for non-surface lifts (0.25' maximum for surface lift); the temperature shall be 250 degree minimum, 350 degree maximum, compacted to 92% of the theoretical maximum.
5. All joints shall be tacked, sealed and sanded.
6. Trench shall be plated until paved.
7. For longitudinal installation, full lane width including turn lanes restoration shall be required or as directed by Clark County. For transverse installation refer to surfacing restoration of detail U6. See Section 12.20A.120.C.

BASE COURSE:

1. 0.80 ft. minimum depth (1-1/4" minus) C.S.B.C. (W.S.D.O.T. approved material).
2. Compacted to 95% of maximum density. See trench zone.
3. Equivalent depth of A.T.B. may be substituted.
4. For transverse or diagonal trenches in existing roadway pavement, CDF will be used from the bottom of full pavement section to a maximum CDF section of 3 feet or to 6" above the top of the pipe, which ever is less. See note 13 of Std. Plan UGN of this Manual.

TRENCH ZONE:

1. Granular backfill as approved by local agency or W.S.D.O.T. specifications for granular backfill. Compacted to 95% of maximum density in the trench zone using Method C compaction as per Section 2-03.3(14)C.
2. Native material may be used if approved prior to construction by Clark County.
3. Trench zone width -- see below.

PIPE ZONE:

1. Pipe zone material as specified by utility owner, and shall conform to section 9-03.12(3) WSDOT Specs.
2. 1.0 ft. max. from top of the pipe. 6" from top of pipe when CDF backfill used.

CONDITIONS:

1. A copy of the permit and requirements shall be on the job site at all times.
2. The permit holder shall be responsible for all restoration and maintenance of ditches, shoulders, driveways, landscaping, etc.
3. Call Clark County at 397-2446 twenty-four hours prior to commencing work.

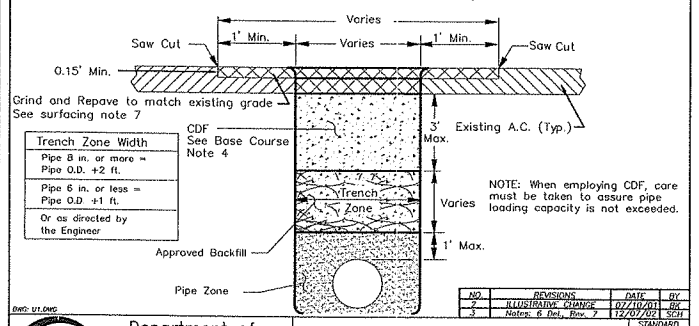

Trench Zone Width
Pipe 8 in. or more = Pipe O.D. +2 ft.
Pipe 6 in. or less = Pipe O.D +1 ft.
Or as directed by the Engineer

NOTE: When employing CDF, care must be taken to assure pipe loading capacity is not exceeded.

DWG: U1.DWG

NO.	REVISIONS	DATE	BY
2	ILLUSTRATIVE CHANGE	07/10/03	RK
3	Notes, & Det., Rev. 2	12/07/021	SCH

Department of Public Works, CLARK COUNTY WASHINGTON, proud past, promising future

OPEN CUT UTILITY TRENCH BACKFILL DETAIL COLLECTOR OR ARTERIAL ROADWAY

APPROVED — PETER CAPELLI, COUNTY ENGINEER — 7/20/01 DATE

STANDARD U1 — PLAN No. — DESIGNED — DRAWN — DATE 04/25/03

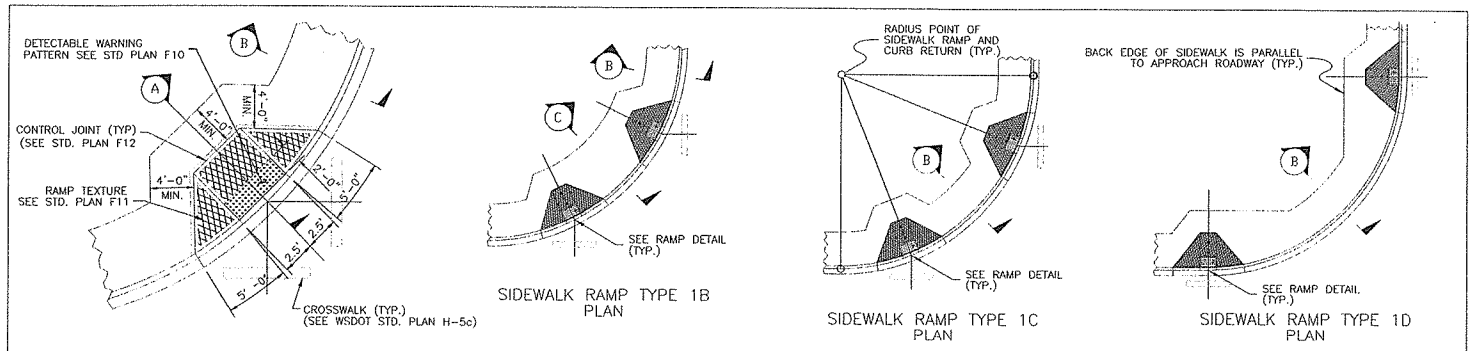

SIDEWALK RAMP TYPE 1A PLAN

SIDEWALK RAMP TYPE 1B PLAN

SIDEWALK RAMP TYPE 1C PLAN

SIDEWALK RAMP TYPE 1D PLAN

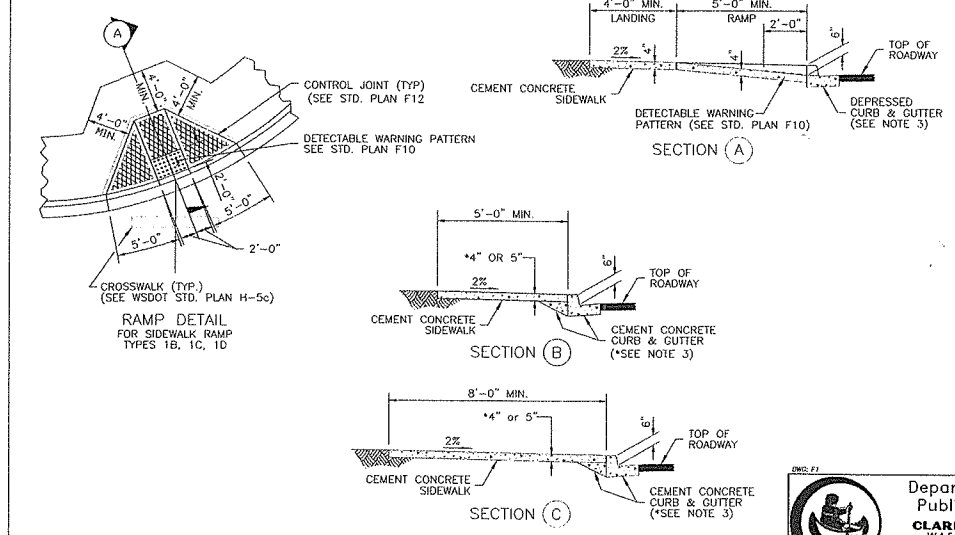

RAMP DETAIL FOR SIDEWALK RAMP TYPES 1B, 1C, 1D

SECTION (A)

SECTION (B)

SECTION (C)

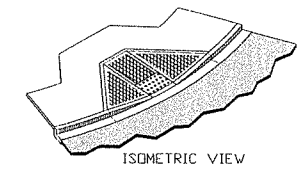

ISOMETRIC VIEW

NOTES

1. Avoid placing drainage structures, junction boxes or other obstructions in front of ramp access areas.
2. Detectable warning patterns may be created by any method that will achieve the truncated dome dimensions and spacing shown.
3. Curb and gutter shown, see Construction Plans for the curb design specified. See Std. Plan F18 for standard curb details, and std. plan F18b for rolled curb & gutter with THICKENED SIDEWALK.
4. The plan views for SIDEWALK RAMP TYPES 1B, 1C & 1D are provided to define each ramp type. See the RAMP DETAIL on this sheet. See Std. Plan F12 for sidewalk joint placement and details.
5. Ramp slopes shall not be steeper than 12H:1V.
6. For Arterials and Collectors use WSDOT Standard Plan F-3a.

DWG: F1

NO.	REVISIONS	DATE	BY

Department of Public Works, CLARK COUNTY WASHINGTON, proud past, promising future

SIDEWALK RAMP TYPES 1A, 1B, 1C & 1D

APPROVED — PETER CAPELLI, COUNTY ENGINEER — 01/01/04 DATE

STANDARD F1 — PLAN No. — DESIGNED SCH — DRAWN SCH — DATE 11/14/03

NOTES:

1. EXISTING CURB, GUTTER, AND SIDEWALK TO BE SAWCUT AND REMOVED FOR INSTALLATION OF NEW RAMP.
2. RAMPS TO BE POURED SEPARATELY FROM SIDEWALK.
3. RAMP SLOPES SHALL NOT BE STEEPER THAN 12H:1V.

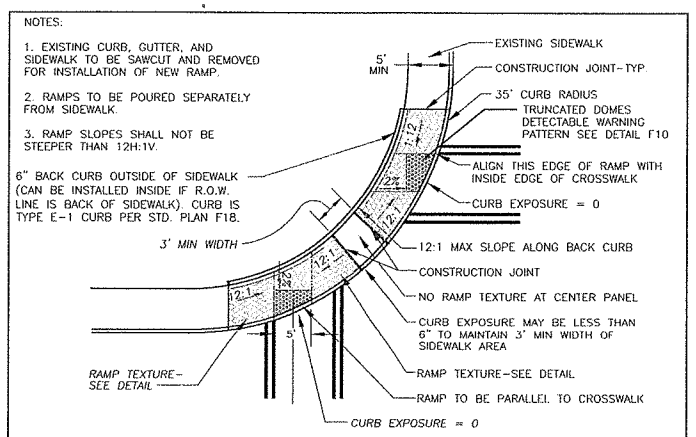

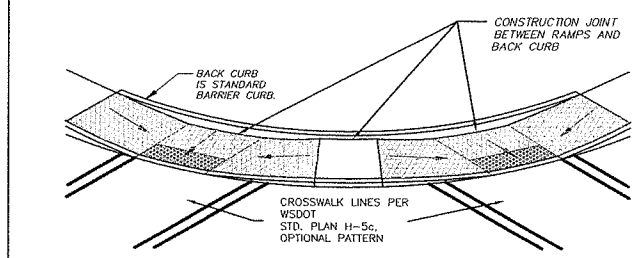

THIS TYPE OF RAMP IS ONLY TO BE USED IN EXISTING RESTRICTED RIGHT-OF-WAY AREAS, DOUBLE RAMP SHOWN-SINGLE RAMP MAY BE USED AT BOISE INSTALLATION.

DWG: F2b.dwg

NO.	REVISIONS	DATE	BY
1	TRUNCATED DOMES	8/21/03	SCH

Department of Public Works, CLARK COUNTY WASHINGTON

TYPE 2 ALTERNATE RAMP - DOUBLE

APPROVED — PETER CAPELLI, COUNTY ENGINEER — 8/21/03 DATE

STANDARD F2b — DESIGNED DG — DRAWN KB — DATE 7/24/00

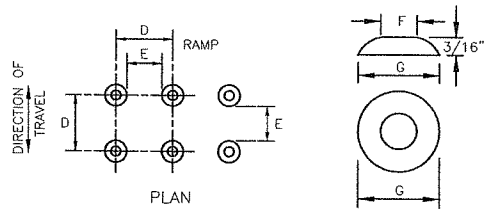

PLAN

TRUNCATED DOME DETAIL

	MIN.	MAX.
D	1 5/8"	2 3/8"
E	5/8"	1 1/2"
F	7/16"	3/4"
G	7/8"	1 7/16"

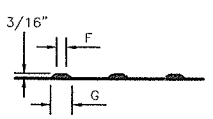

ELEVATION

TRUNCATED DOMES (SEE NOTE 2) DETECTABLE WARNING PATTERN DETAIL

NOTES

1. AVOID PLACING DRAINAGE STRUCTURES, JUNCTION BOXES OR OTHER OBSTRUCTIONS IN FRONT OF RAMP ACCESS AREA.
2. THE DETECTABLE WARNING PATTERNS CAN BE CREATED BY ACCEPTABLE MEANS THAT WILL ACHIEVE THE TRUNCATED DOME DIMENSIONS AND SPACING SHOWN.
3. PLACE TRUNCATED DOME DETECTABLE WARNING TEXTURE IN THE LOWER 24" OF THE THROAT OF THE RAMP ONLY. ARRANGE DOMES USING IN-LINE PATTERN ONLY AS SHOWN. COLOR OF TEXTURE (COATING) SHALL BE SAFETY YELLOW IN COMPLIANCE WITH WSDOT STD. SPEC. OR AS INSTRUCTED BY COUNTY INSPECTOR.
4. FOR CONSTRUCTION OF SIDEWALK RAMPS OUTSIDE OF PUBLIC RIGHT-OF-WAY, CHECK WITH STATE BUILDING CODES.

DWG: F10.DWG

NO.	REVISIONS	DATE	BY

Department of Public Works, CLARK COUNTY WASHINGTON, proud past, promising future

TRUNCATED DOME DETECTABLE WARNING PATTERN

APPROVED — PETER CAPELLI, COUNTY ENGINEER — 01/01/04 DATE

STANDARD F10 — PLAN No. — DESIGNED SCH — DRAWN SCH — DATE 6/15/01

JOINT SPACING:
SURFACE JOINTS - 5'
CONTROL JOINTS - 15'
EXPANSION JOINTS AT, STRUCTURES, OBSTRUCTIONS, OR AS DIRECTED BY THE INSPECTOR.

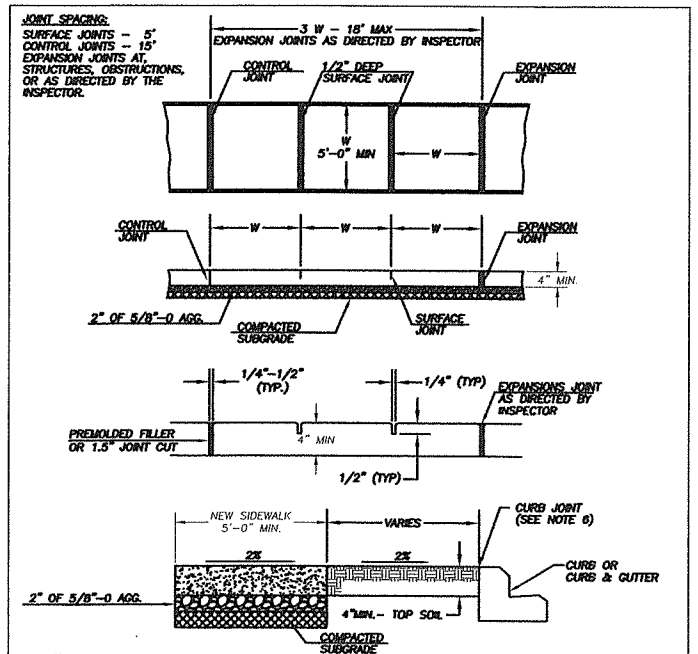

NOTES:

1. CONCRETE SHALL BE 3,000 PSI MIN. (CLASS 3000), 3 1/2" SLUMP (± 1")
2. FINISH SHALL BE MEDIUM BROOM PERPENDICULAR TO PEDESTRIAN TRAFFIC UNLESS OTHERWISE DIRECTED.
3. ALL EXISTING EDGES SHALL BE SAWCUT.
4. NO FILLER REQUIRED FOR SURFACE JOINTS.
5. ALL JOINTS AND EDGES SHALL BE FINISHED WITH 1/4" RADIUS EDGER (3" SMOOTH EACH SIDE)
6. FOR SIDEWALKS ADJACENT TO THE CURB AND POURED AT THE SAME TIME AS THE CURB, THE JOINT BETWEEN THEM SHALL BE A TROWELED JOINT WITH A MIN. 1/2" RADIUS.

DWG: F12.dwg

NO.	REVISIONS	DATE	BY
1	CHANGE SUBGRADE &	03/28/02	KB
2	6" BASE ADJ. & NOTES	10/07/021	SCH

Department of Public Works, CLARK COUNTY WASHINGTON, proud past, promising future

SIDEWALK DETAIL

APPROVED — PETER CAPELLI, COUNTY ENGINEER — 01/01/04 DATE

STANDARD F12 — PLAN No. — DESIGNED DG — DRAWN KB — DATE 10/04/02

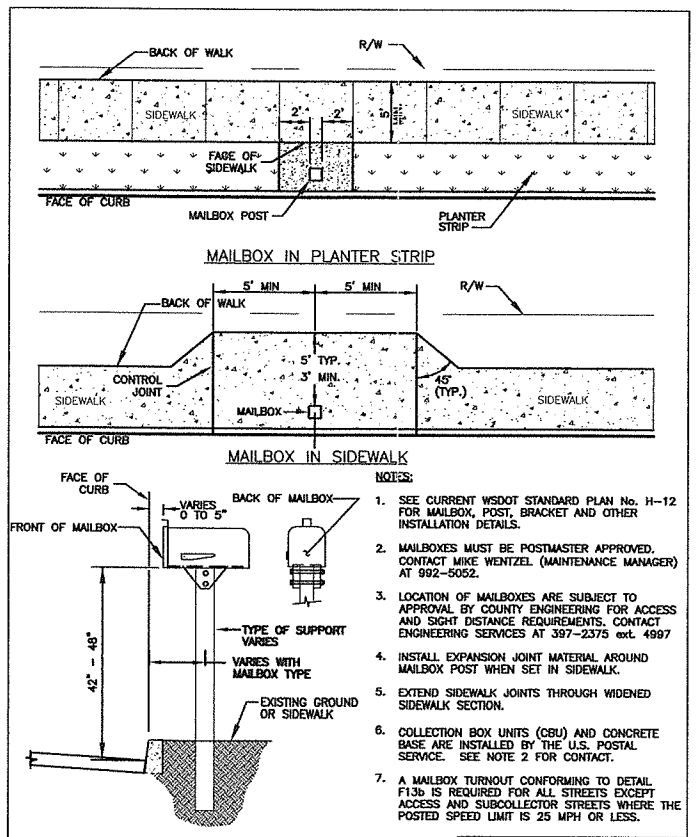

NOTES:

1. SEE CURRENT WSDOT STANDARD PLAN No. H-12 FOR MAILBOX, POST, BRACKET AND OTHER INSTALLATION DETAILS.
2. MAILBOXES MUST BE POSTMASTER APPROVED. CONTACT MIKE WENTZEL (MAINTENANCE MANAGER) AT 992-5052.
3. LOCATION OF MAILBOXES ARE SUBJECT TO APPROVAL BY COUNTY ENGINEERING FOR ACCESS AND SIGHT DISTANCE REQUIREMENTS. CONTACT ENGINEERING SERVICES AT 397-2375 ext. 4997
4. INSTALL EXPANSION JOINT MATERIAL AROUND MAILBOX POST WHEN SET IN SIDEWALK.
5. EXTEND SIDEWALK JOINTS THROUGH WIDENED SIDEWALK SECTION.
6. COLLECTION BOX UNITS (CBU) AND CONCRETE BASE ARE INSTALLED BY THE U.S. POSTAL SERVICE. SEE NOTE 2 FOR CONTACT.
7. A MAILBOX TURNOUT CONFORMING TO DETAIL F13b IS REQUIRED FOR ALL STREETS EXCEPT ACCESS AND SUBCOLLECTOR STREETS WHERE THE POSTED SPEED LIMIT IS 25 MPH OR LESS.

WSDOT STD. PLANS WEB SITE ADDRESS: http://www.wsdot.wa.gov/eesc/design/designstandards/HTM/TOC.pdf

DWG: F13.DWG

NO.	REVISIONS	DATE	BY

Department of Public Works, CLARK COUNTY WASHINGTON, proud past, promising future

SIDEWALK MAILBOX PLACEMENT

APPROVED — PETER CAPELLI, COUNTY ENGINEER — 01/01/04 DATE

STANDARD F13 — PLAN No. — DESIGNED SCH — DRAWN SCH — DATE 6/13/02

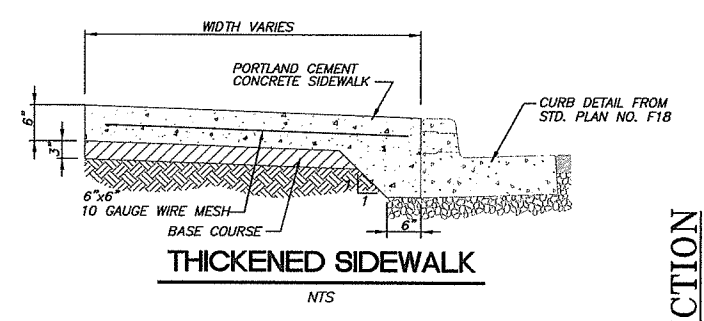

THICKENED SIDEWALK

NTS

NOT FOR CONSTRUCTION

DESIGNED:	SLW
DRAWN:	GME
CRP:	330422
HORIZ.	NA
VERT.	NA
DATE:	8/27/2004
DWG:	D01
SHEET	13 OF 81

CALL 48 HOURS BEFORE YOU DIG 1-800-424-5555 "It's the Law" NORTHWEST UTILITIES NOTIFICATION CENTER

dak Incorporated
700 Washington St., Suite 401
Vancouver, WA 98660
Phone: (360) 737-9613
FAX: (360) 737-9651

DESIGN & ENGINEERING DIVISION
NE 63RD STREET IMPROVEMENTS

ROADWAY DETAILS

proud past, promising future — CLARK COUNTY WASHINGTON

tscale: 5
resolved
944x001_border
KW WASH

V: SHERYL 08/24/04 6:22pm --> V:\PROJECT\11900\11944\DWG\C944S011.DWG

tscale: 96
esolved
944x001_border
KW WASH

NOTES:
1. A MINIMUM 3' WIDE ACCESSIBLE ROUTE SHALL BE MAINTAINED IN ALL PEDESTRIAN ACCESSIBLE AREAS.
2. CONTRACTION POINTS SHALL BE PLACED ALONG SIDEWALKS IN ACCORD WITH SIDEWALK DETAIL. ALL JOINTS SHALL BE CLEANED AND EDGED.
3. CHANGES IN LEVEL UP TO 1/4" MAY BE VERTICAL AND WITHOUT EDGE TREATMENT. CHANGES IN LEVEL BETWEEN 1/4" AND 1/2" SHALL BE BEVELED WITH A SLOPE NO GREATER THAN 2:1.
4. CEMENT CONCRETE APPROACHES SHALL BE CONSTRUCTED OF AIR-ENTRAINED CLASS 3000 AND MAY BE POURED INTEGRAL WITH CURB.
5. EXISTING CURB, GUTTER, AND SIDEWALK TO BE SAWCUT AND REMOVED FOR INSTALLATION OF APPROACH.
6. COMMERCIAL DRIVEWAY REQUIRES REINFORCING STEEL (6"x6" 10 GA WIRE MESH) MIN. 3" COVER.
7. 3" DEPTH 3/4"-0 CRUSHED AGGREGATE BASE COMPACTED TO 95% OF MAX. DRY DENSITY.
8. SUBGRADE PREPARATION PER WSDOT STD. SPEC. 2-06.3(1).

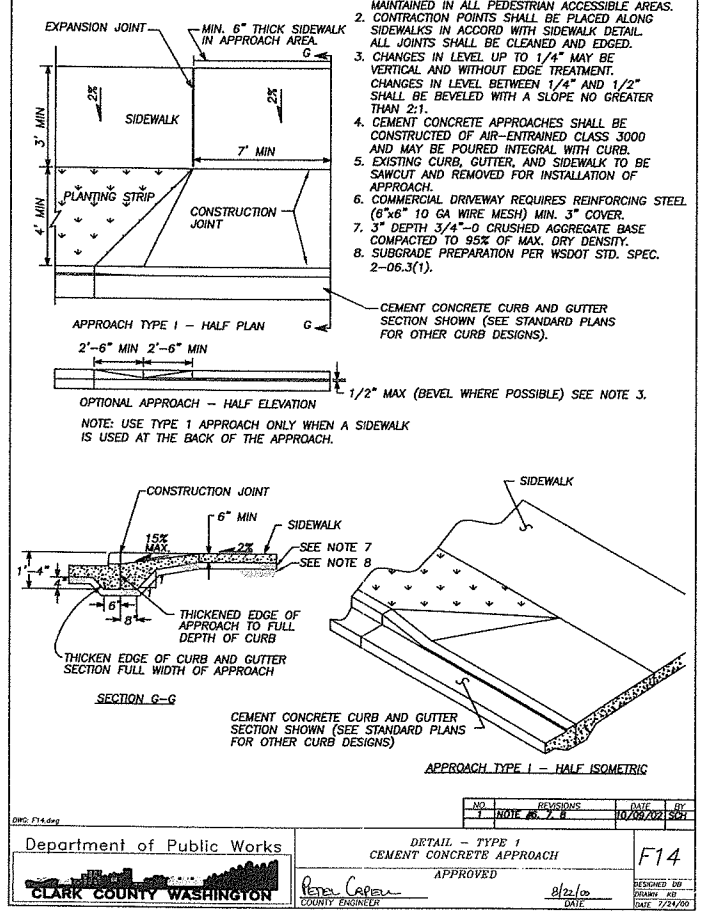

NO.	REVISIONS	DATE	BY
1	NOTE #6, 7, 8	10/09/02	SCH

DWG: F14.dwg

Department of Public Works
CLARK COUNTY WASHINGTON
DETAIL – TYPE 1
CEMENT CONCRETE APPROACH
APPROVED
PETER CAPELLI, COUNTY ENGINEER — DATE 8/22/00
F14
DESIGNED DB — DRAWN KB — DATE 7/24/00

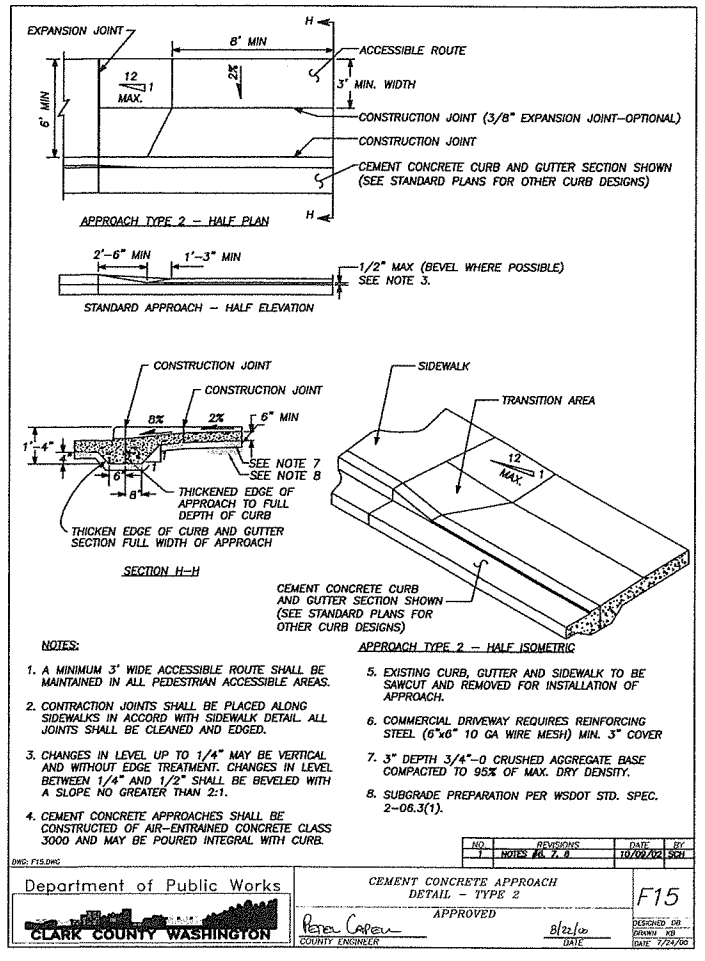

NOTES:
1. A MINIMUM 3' WIDE ACCESSIBLE ROUTE SHALL BE MAINTAINED IN ALL PEDESTRIAN ACCESSIBLE AREAS.
2. CONTRACTION JOINTS SHALL BE PLACED ALONG SIDEWALKS IN ACCORD WITH SIDEWALK DETAIL. ALL JOINTS SHALL BE CLEANED AND EDGED.
3. CHANGES IN LEVEL UP TO 1/4" MAY BE VERTICAL AND WITHOUT EDGE TREATMENT. CHANGES IN LEVEL BETWEEN 1/4" AND 1/2" SHALL BE BEVELED WITH A SLOPE NO GREATER THAN 2:1.
4. CEMENT CONCRETE APPROACHES SHALL BE CONSTRUCTED OF AIR-ENTRAINED CONCRETE CLASS 3000 AND MAY BE POURED INTEGRAL WITH CURB.
5. EXISTING CURB, GUTTER AND SIDEWALK TO BE SAWCUT AND REMOVED FOR INSTALLATION OF APPROACH.
6. COMMERCIAL DRIVEWAY REQUIRES REINFORCING STEEL (6"x6" 10 GA WIRE MESH) MIN. 3" COVER
7. 3" DEPTH 3/4"-0 CRUSHED AGGREGATE BASE COMPACTED TO 95% OF MAX. DRY DENSITY.
8. SUBGRADE PREPARATION PER WSDOT STD. SPEC. 2-06.3(1).

NO.	REVISIONS	DATE	BY
1	NOTES #6, 7, 8	10/09/02	SCH

DWG: F15.DWG

Department of Public Works
CLARK COUNTY WASHINGTON
CEMENT CONCRETE APPROACH
DETAIL – TYPE 2
APPROVED
PETER CAPELLI, COUNTY ENGINEER — DATE 8/22/00
F15
DESIGNED DB — DRAWN KB — DATE 7/24/00

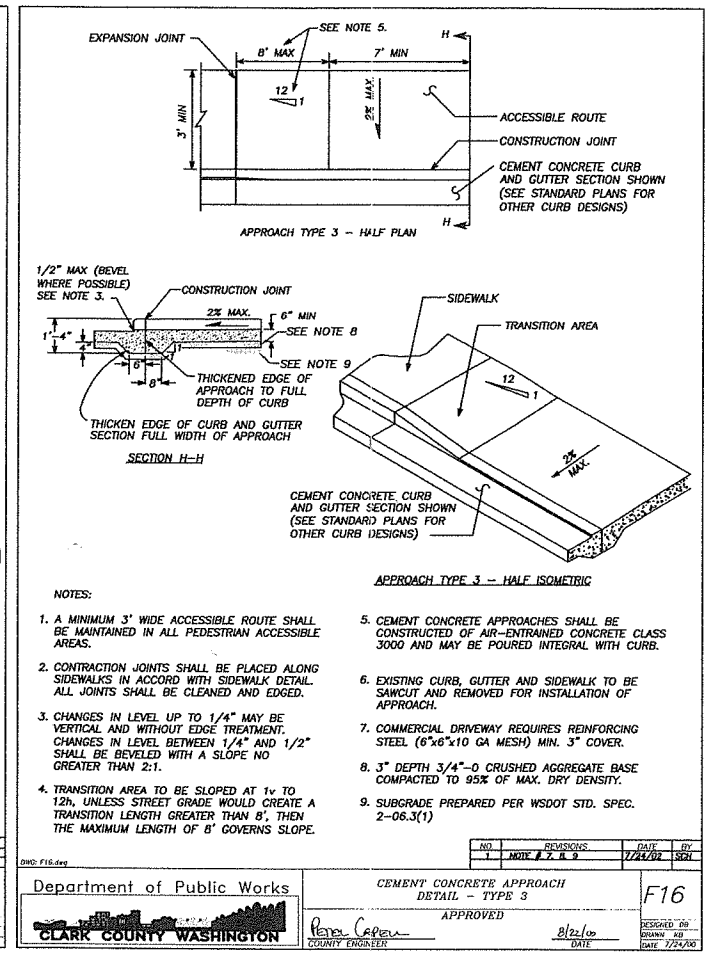

NOTES:
1. A MINIMUM 3' WIDE ACCESSIBLE ROUTE SHALL BE MAINTAINED IN ALL PEDESTRIAN ACCESSIBLE AREAS.
2. CONTRACTION JOINTS SHALL BE PLACED ALONG SIDEWALKS IN ACCORD WITH SIDEWALK DETAIL. ALL JOINTS SHALL BE CLEANED AND EDGED.
3. CHANGES IN LEVEL UP TO 1/4" MAY BE VERTICAL AND WITHOUT EDGE TREATMENT. CHANGES IN LEVEL BETWEEN 1/4" AND 1/2" SHALL BE BEVELED WITH A SLOPE NO GREATER THAN 2:1.
4. TRANSITION AREA TO BE SLOPED AT 1v TO 12h, UNLESS STREET GRADE WOULD CREATE A TRANSITION LENGTH GREATER THAN 8', THEN THE MAXIMUM LENGTH OF 8' GOVERNS SLOPE.
5. CEMENT CONCRETE APPROACHES SHALL BE CONSTRUCTED OF AIR-ENTRAINED CONCRETE CLASS 3000 AND MAY BE POURED INTEGRAL WITH CURB.
6. EXISTING CURB, GUTTER AND SIDEWALK TO BE SAWCUT AND REMOVED FOR INSTALLATION OF APPROACH.
7. COMMERCIAL DRIVEWAY REQUIRES REINFORCING STEEL (6"x6"x10 GA MESH) MIN. 3" COVER.
8. 3" DEPTH 3/4"-0 CRUSHED AGGREGATE BASE COMPACTED TO 95% OF MAX. DRY DENSITY.
9. SUBGRADE PREPARED PER WSDOT STD. SPEC. 2-06.3(1)

NO.	REVISIONS	DATE	BY
1	NOTE # 7, & 9	7/24/02	SCH

DWG: F16.dwg

Department of Public Works
CLARK COUNTY WASHINGTON
CEMENT CONCRETE APPROACH
DETAIL – TYPE 3
APPROVED
PETER CAPELLI, COUNTY ENGINEER — DATE 8/22/00
F16
DESIGNED DB — DRAWN KB — DATE 7/24/00

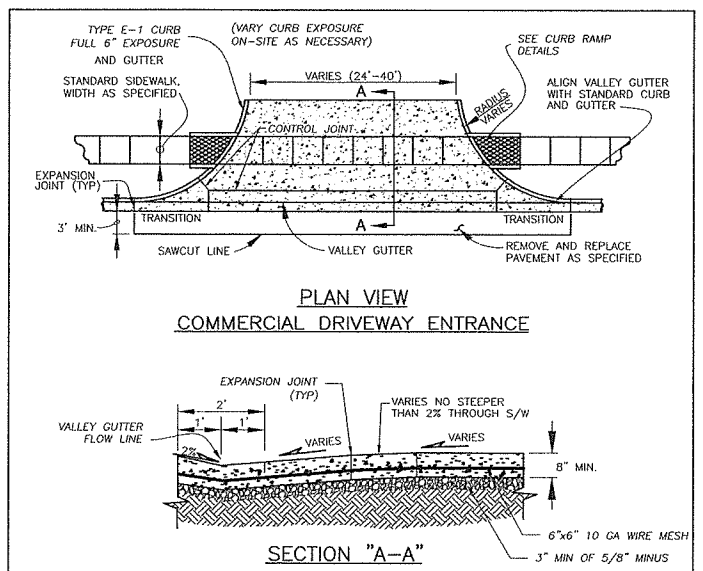

NOTES:
1. CONCRETE SHALL BE 3300 PSI (MIN. BREAKING STRENGTH @ 28 DAYS) WITH 3" SLUMP (±1"). TOTAL AIR CONTENT (% BY VOLUME OF CONCRETE) SHALL NOT BE LESS THAN 4% OR MORE THAN 7%. MEDIUM BROOM FINISH PARALLEL TO DRIVEWAY CENTERLINE.
2. ALL JOINTS SHALL BE FINISHED WITH 1/4" RADIUS EDGE UNLESS OTHERWISE NOTED.
3. DRIVEWAYS EXCEEDING 15' IN TOTAL WIDTH SHALL HAVE ADDITIONAL LONGITUDINAL JOINTS AS DIRECTED. CONTROL JOINT SPACING SHALL NOT EXCEED 15'
4. DRIVEWAY SHALL BE CONSTRUCTED WITH REINFORCING STEEL (6x6 10 GA WIRE MESH), MIN. 3" COVER.
5. ALL EXISTING EDGES SHALL BE SAW CUT.
6. 3" DEPTH 5/8"-0 CRUSHED AGGREGATE BASE COMPACTED TO 95% OF MAX. DRY DENSITY.
7. SUBGRADE PREPARATION PER WSDOT STD. SPEC. 2-06.3(1).
8. EXISTING CURB SHALL BE REMOVED TO EXISTING JOINT OR SAWCUT SUCH THAT 3' MIN. OF NEW STREET SECTION IS CONSTRUCTED ADJACENT TO NEW DRIVEWAY.
9. MAXIMUM 2% CROSS SLOPE ACROSS PEDESTRIAN CROSSING.
10. CURB RADIUS PER TABLES 40.350.030-2 THRU 6, OR AS APPROVED BY COUNTY ENGINEER.

NO.	REVISIONS	DATE	BY

DWG: F17.DWG

Department of Public Works
CLARK COUNTY WASHINGTON
proud past, promising future
MAJOR COMMERCIAL CONCRETE APPROACH
APPROVED
PETER CAPELLI, COUNTY ENGINEER — DATE 01/01/04
F17
DESIGNED SCH — DRAWN SCH — DATE 09/18/03

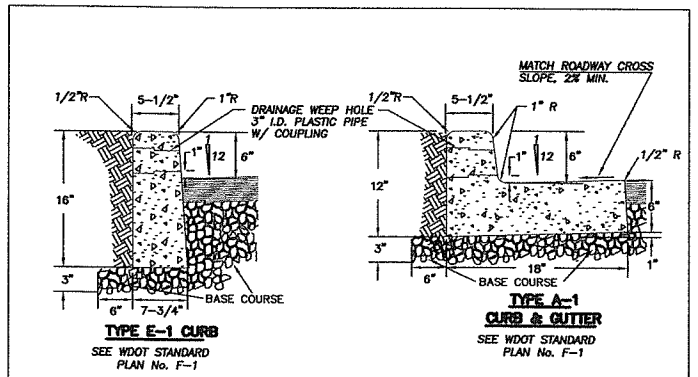

NOTES
1. CONCRETE SHALL BE 3000 PSI MIN. (CLASS 3000) 3 1/2" SLUMP (MAX.)
2. CURBS ADJACENT TO PAVEMENT OR SIDEWALK TO HAVE EXPANSION AND/OR CONTRACTION JOINTS TO MATCH EXISTING PATTERNS.
3. 3/8" EXPANSION JOINTS TO BE PROVIDED AT EACH POINT OF TANGENCY OF THE CURB, COLD JOINTS, EACH SIDE OF INLET STRUCTURES AND DRIVEWAYS. MATERIAL TO BE PRE-MOLDED, ASPHALT IMPREGNATED AND NON EXTRUDING.
4. CONTRACTION JOINT SPACING NOT TO EXCEED 15 FEET. THE DEPTH OF THE JOINT SHALL BE AT LEAST 1-1/2 INCHES. WEEP HOLES TO BE CENTERED WITH CONTRACTION JOINTS.
5. BASE COURSE SHALL BE TO SUBGRADE OF STREET SECTION OR 3 INCHES, WHICHEVER IS GREATER, AND SHALL EXTEND 6" BEHIND THE CURB.
6. DRAINAGE WEEP HOLES TO BE 3" I.D. PLASTIC PIPE WITH COUPLING. FINISH PIPE END FLUSH WITH FACE OF CURB.
7. GROUT ANY VOIDS IN CONCRETE SURROUNDING PIPE.
8. DRAINAGE ACCESS THROUGH EXISTING CURBS SHALL BE CORE DRILLED.
9. CURB TO BE BRUSH FINISHED. ALL EXISTING EDGES SHALL BE SAWCUT.
10. ALL MATERIALS AND WORKMANSHIP FOR TYPE E-1 & A-1 SHALL BE IN ACCORDANCE WITH WDOT STANDARD PLAN No. F-1, APPROVED 7/18/97 OR MOST CURRENT REVISION.

NO.	REVISIONS	DATE	BY

DWG: F18.DWG

Department of Public Works
CLARK COUNTY WASHINGTON
proud past, promising future
CONCRETE CURBS
APPROVED
PETER CAPELLI, COUNTY ENGINEER — DATE 01/01/04
STANDARD PLAN No. F18
DESIGNED SCH — DRAWN SCH — DATE 07/24/03

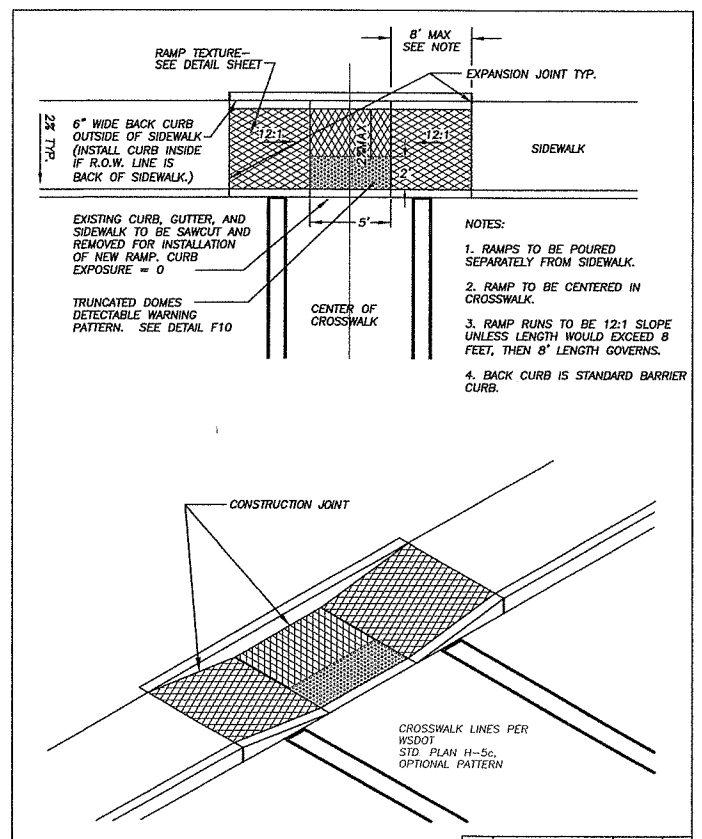

NO.	REVISIONS	DATE	BY
1	TRUNCATED DOME PATTERN	6/15/03	SCH

DWG: F3.dwg

Department of Public Works
CLARK COUNTY WASHINGTON
TYPE 3 RAMP
APPROVED
PETER CAPELLI, COUNTY ENGINEER — DATE 8/22/00
F3
DESIGNED DB — DRAWN KB — DATE 7/24/00

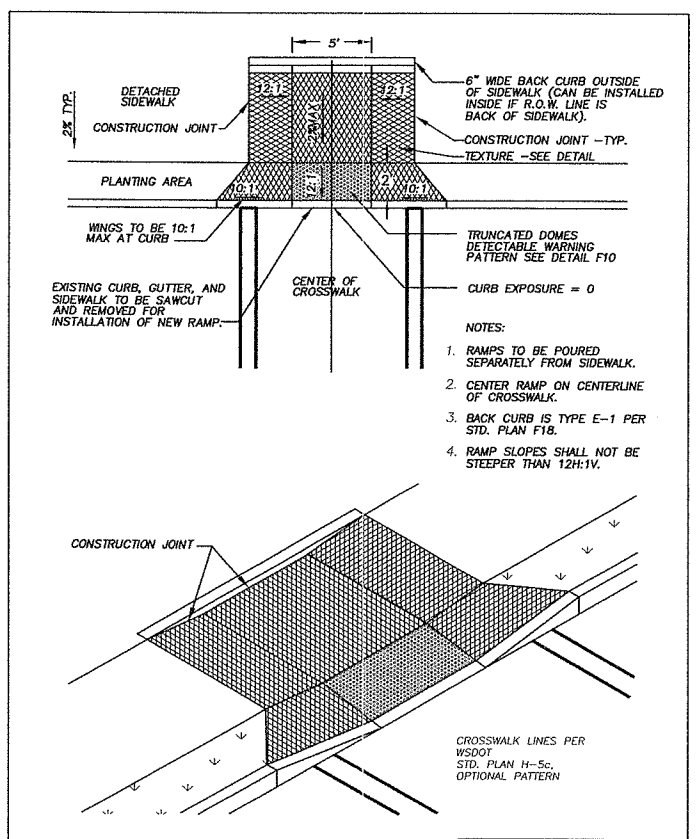

NO.	REVISIONS	DATE	BY
1	TRUNCATED DOME PATTERN	6/14/03	SCH

DWG: F4.dwg

Department of Public Works
CLARK COUNTY WASHINGTON
TYPE 4 RAMP
APPROVED
PETER CAPELLI, COUNTY ENGINEER — DATE 8/22/00
F4
DESIGNED DB — DRAWN KB — DATE 7/24/00

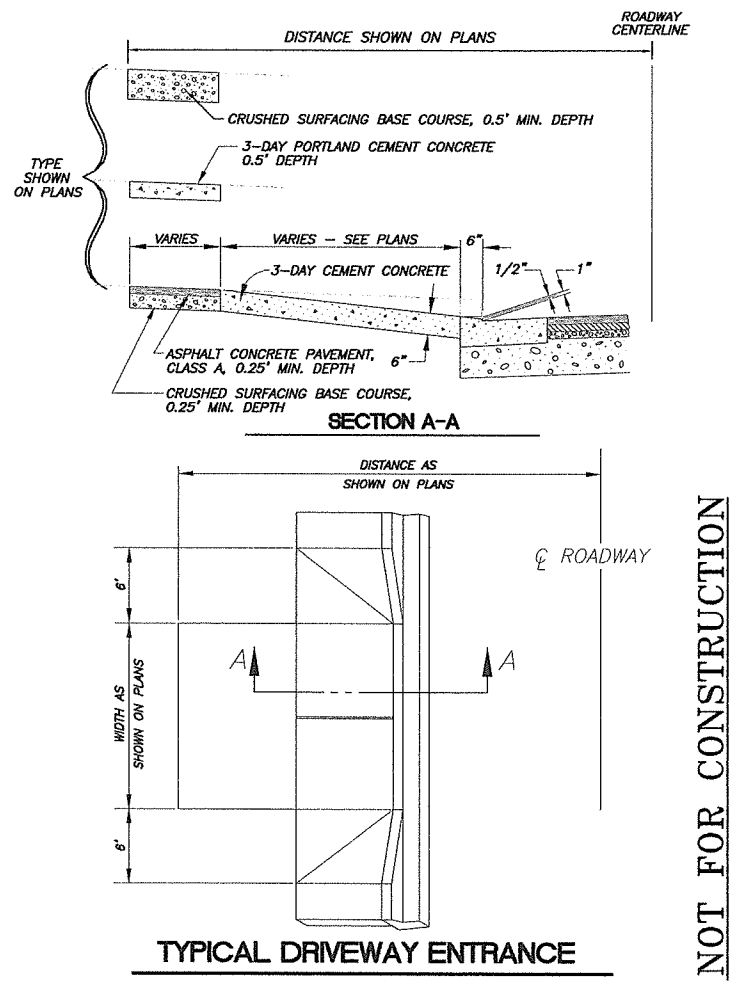

NOT FOR CONSTRUCTION

DESIGNED:	SLW
DRAWN:	GME
CRP:	330422
HORIZ.	NA
VERT.	NA
DATE:	8/27/2004
DWG:	D02
SHEET	14 OF 81

CALL 48 HOURS BEFORE YOU DIG 1-800-424-5555 "It's the Law" NORTHWEST UTILITIES' NOTIFICATION CENTER

otak Incorporated
700 Washington St. Suite 401
Vancouver, WA 98660
Phone: (360) 737-9613
FAX: (360) 737-9651

DESIGN & ENGINEERING DIVISION
NE 63RD STREET IMPROVEMENTS
ROADWAY DETAILS

CLARK COUNTY WASHINGTON
proud past, promising future

V: SHERYL 08/24/04 6:23am --> V:\PROJECT\11900\11944\DWG\C9445012.DWG

XREF LIST
Ltscale: 40
Resolved
C944x001_border
PKW WASH
Unresolved
A14
C978X001

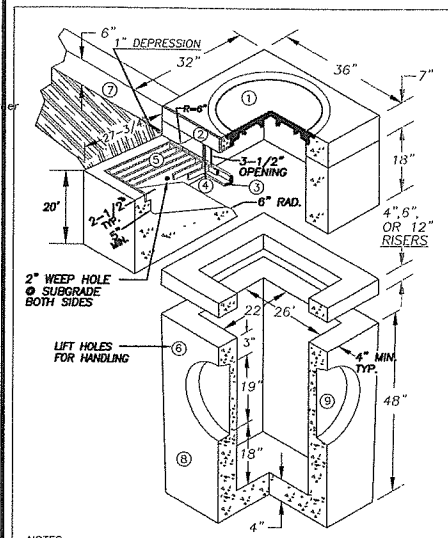

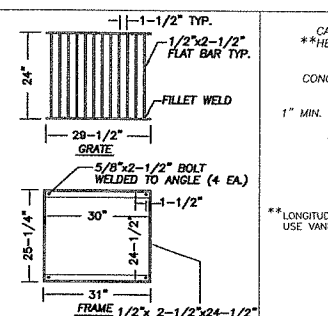

1. 24" x 3-1/2" CAST IRON LOCKING FRAME & COVER
2. 2-1/2"x3-1/2"x1/4"x 35 7/8" GALVANIZED ANGLE IRON
3. 2-1/2"x2-1/2"x3/8" FRAME GALVANIZED ANGLE IRON
4. 2 EA. #4 TRASH BARS @ 8" O.C.
5. 1/2"x2-1/2" FLAT BAR GALVANIZED GRATE
6. 2 EA. BASE UNIT LIFT HOLES
7. 6" CURB AND 12" GUTTERS
8. STANDARD TYPE 1 BASE UNIT
9. PIPE KNOCKOUTS ALL FOUR SIDES.

NOTES

1. COMBINATION CURB INLET TO BE CONSTRUCTED IN ACCORDANCE WITH ASTM C478 & C890 UNLESS SHOWN ON PLANS OR NOTED IN STANDARD SPECIFICATIONS.
2. REINFORCING FOR INLET UNIT, 3 EA. #4 HORZONTAL BARS; REINFORCING FOR TOP UNIT, 2 EA. #3 HORZONTAL BARS; REINFORCING FOR INLET SLOPED BASE, 4x4 MESH.
3. ALL REBAR TO MEET ASTM A615 GRADE 60.
4. AS AN ACCEPTABLE ALTERNATIVE TO REBAR, WELDED WIRE FABRIC HAVING A MIN. AREA OF 0.12 SQAURE INCHES PER FOOT MAY BE USED. WELDED WIRE FABRIC SHALL COMPLY TO ASTM A497. WIRE FABRIC SHALL NOT BE PLACED IN KNOCKOUTS.
5. ALL REINFORCED CAST-IN-PLACE CONCRETE SHALL BE CLASS 4,000.
6 PRECAST BASES SHALL BE FURNISHED WITH CUTOUTS OR KNOCKOUTS. KNOCKOUTS SHALL HAVE A WALL THICKNESS OF 2" MIN. ALL PIPE SHALL BE INSTALLED IN FACTORY PROVIDED KNOCKOUTS. UNUSED KNOCKOUTS NEED NOT BE GROUTED IF WALL IS LEFT INTACT.
7. KNOCKOUTS OR CUTOUT HOLE SIZE IS EQUAL TO PIPE OUTER DIAM. PLUS INLET WALL THICKNESS.
8. ROUND KNOCKOUTS MAY BE ON ALL 4 SIDES WITH MAX. DIAM. OF 17".
9. THE MAX. DEPTH FROM THE FINISHED GRADE TO THE PIPE INVERT IS 5'-0".
10. ANY PROTUDING ENDS OF PIPES SHALL BE TRIMMED FLUSH WITH THE INSIDE WALLS AND GROUTED TO THE SATISFACTION OF ENGINEER.
11. GRATE TO HAVE 1" DEPRESSION AT GUTTER INLET WITH GUTTER TO BE TAPERED DOWN TO INLET.
12. INSTALL REMOVABLE APWA TYPE 60A TRAP OR EQUAL, SEE STD. PLAN D2.1.
13. CONTRACTOR SHALL HAVE THE OPTION OF FURNISHING PRECAST OR CAST-IN-PLACE INLET STRUCTURES, UNLESS SPECIFIED.
14. SEE STD. PLAN 4.1 FOR BASIN GUTTER PAN DETAIL.

NO.	REVISIONS	DATE	BY

DWG: D3-0.DWG

Department of Public Works
CLARK COUNTY WASHINGTON
proud past, promising future

STANDARD TYPE 1 COMBINATION CURB INLET
APPROVED
Peter Capen — COUNTY ENGINEER — 01/01/04 DATE
STANDARD D3.0
PLAN No.
DESIGNED SCH
DRAWN SCH
DATE 05/06/03

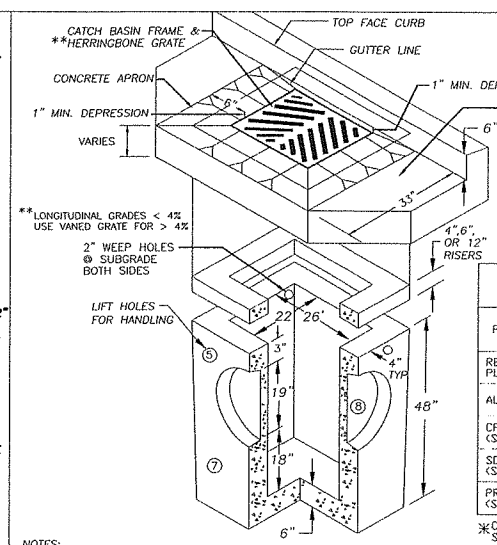

PIPE MATERIAL	MAXIMUM INSIDE DIAMETER
REINFORCED OR PLAIN CONCRETE	18"
ALL METAL PIPE	21"
CPSSP * (Std. Spec. 9-05.20	18"
SOLID WALL PVC (Std. Spec. 9-05.12(1)	21"
PROFILE WALL PVC (Std. Spec. 9-05.12(2)	21"

*CORRUGATED POLYETHYLENE STORM SEWER PIPE

NOTES:

1. CURB INLET TO BE CONSTRUCTED IN ACCORDANCE WITH ASTM C478 (AASHTO) M 199) & C890 UNLESS SHOWN ON PLANS OR NOTED IN STANDARD SPECIFICATIONS.
2. REINFORCING FOR INLET UNIT, 3 EA. #4 HORIZONTAL BARS.
3. REINFORCING FOR TOP UNIT, 2 EA. #3 HORIZONTAL BARS.
4. ALL REBAR TO MEET ASTM A615 GRADE 60.
5. AS AN ACCEPTABLE ALTERNATIVE TO REBAR, WELDED WIRE FABRIC HAVING A MIN. AREA OF 0.12 SQUARE INCHES PER FOOT MAY BE USED. WELDED WIRE FABRIC SHALL COMPLY TO ASTM A497. WIRE FABRIC SHALL NOT BE PLACED IN KNOCKOUTS.
6. ALL REINFORCED CAST-IN-PLACE CONCRETE SHALL BE CLASS 4,000.
7. PRECAST BASES SHALL BE FURNISHED WITH CUTOUTS OR KNOCKOUTS. KNOCKOUTS SHALL HAVE A WALL THICKNESS OF 2" MIN. ALL PIPE SHALL BE INSTALLED IN FACTORY PROVIDED KNOCKOUTS. UNUSED KNOCKOUTS NEED NOT BE GROUTED IF WALL IS LEFT INTACT.
8. KNOCKOUTS OR CUTOUT HOLE SIZE IS EQUAL TO PIPE OUTER DIAM. PLUS INLET WALL THICKNESS.
9. ROUND KNOCKOUTS MAY BE ON ALL 4 SIDES WITH MAX. DIAM. OF 20".
10. THE MAX. DEPTH FROM THE FINISHED GRADE TO THE PIPE INVERT IS 5'-0".
11. ANY PROTRUDING ENDS OF PIPES SHALL BE TRIMMED FLUSH WITH THE INSIDE WALLS AND GROUTED TO THE SATISFACTION OF ENGINEER.
12. CATCH BASIN FRAME AND GRATE SHALL BE IN ACCORDANCE WITH WDOT STANDARD SPECIFICATIONS AND MEET THE STRENGTH REQUIREMENTS OF FEDERAL SPECIFICATION RR-F-621D. MATING SURFACES SHALL BE FINISHED TO ASSURE NON-ROCKING FIT WITH ANY COVER POSITION.
13. FRAME MAY BE INSTALLED WITH FLANGE DOWN OR CAST INTO RISER.
14 INSTALL REMOVABLE APWA TYPE 60A TRAP OR EQUAL, SEE STD. PLAN D2.1.
15. CONTRACTOR SHALL HAVE THE OPTION OF FURNISHING PRECAST OR CAST-IN-PLACE INLET STRUCTURES, UNLESS SPECIFIED.

NO.	REVISIONS	DATE	BY

DWG: D4-0.DWG

Department of Public Works
CLARK COUNTY WASHINGTON
proud past, promising future

STANDARD CATCH BASIN TYPE 1
APPROVED
Peter Capen — COUNTY ENGINEER — 01/01/04 DATE
STANDARD D4.0
PLAN No.
DESIGNED SCH
DRAWN SCH
DATE 07/01/03

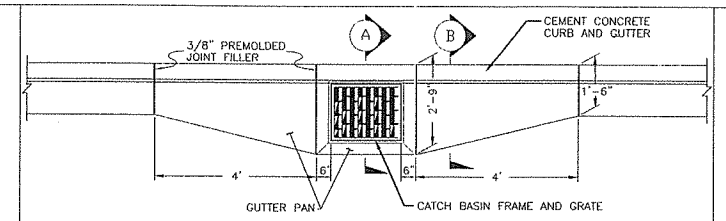

PLAN VIEW
CATCH BASIN GUTTER PAN

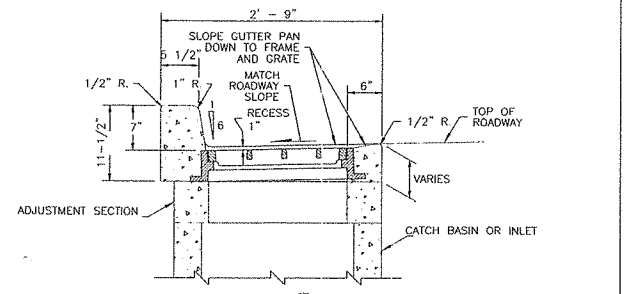

SECTION (A)

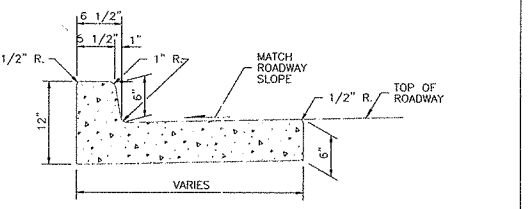

SECTION (B)

NO.	REVISIONS	DATE	BY

DWG: D4-1.DWG

Department of Public Works
CLARK COUNTY WASHINGTON
proud past, promising future

CATCH BASIN GUTTER PAN
APPROVED
Peter Capen — COUNTY ENGINEER — 01/01/04 DATE
STANDARD D4.1
PLAN No.
DESIGNED SCH
DRAWN SCH
DATE 07/01/03

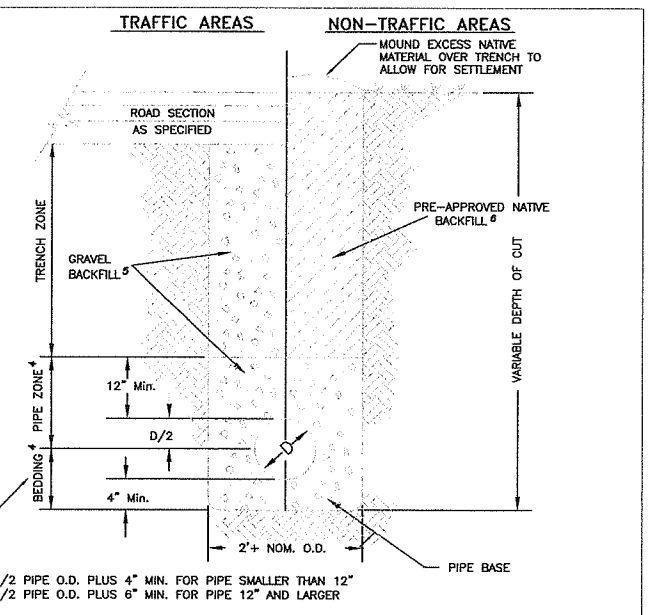

NOTES

1. FOR INSTALLATION OF DRAINAGE PIPE IN NEW DEVELOPMENT.
2. GENERAL PIPE INSTALLATION REQUIREMENTS SHALL BE PER SECTION 7-08 WSDOT SPECS.
3. TRENCH BACK FILL SHALL CONFORM TO CCC 40.350.030(C)(4)(e).
4. PIPE ZONE AND BEDDING MATERIAL SHALL CONFORM TO SECTION 9-03.12(3) WSDOT SPECS.
5. GRAVEL BACKFILL PER WSDOT SPECIFICATION SECTION 9-03.19, AND COMPACTED TO 95% MAX. DENSITY (AASHTO T-99). NATIVE SOILS MAY BE USED UPON APPROVAL BY REVIEWING AUTHORITY IF TESTING SHOWS MATERIAL IS CLASSIFIED AS A-1 OR A-3 BY AASHTO.
6. OUTSIDE THE ROADWAY PRISM, SUITABLE NATIVE BACKFILL SHALL BE COMPACTED TO 90% MAX. DENSITY (AASHTO T-99).
7. ALL COMPACTION SHALL BE IN ACCORDANCE WITH THE COMPACTION CONTROL TEST OF SECTION 2-03.3(14)D.

NO.	REVISIONS	DATE	BY

DWG: D14.DWG

Department of Public Works
CLARK COUNTY WASHINGTON
proud past, promising future

PIPE BEDDING AND BACKFILL DETAIL
APPROVED
Peter Capen — COUNTY ENGINEER — 01/01/04 DATE
STANDARD D14
PLAN No.
DESIGNED SCH
DRAWN SCH
DATE 8/14/03

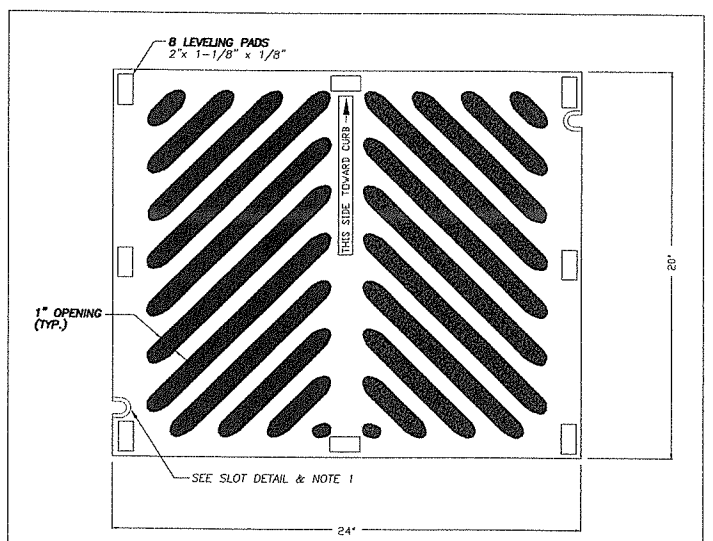

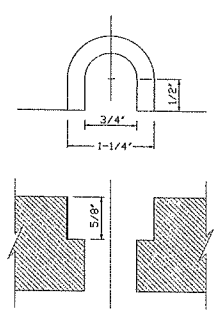

SLOT DETAIL

NOTES

1. WELDING NOT PERMITTED
2. USE VANED GRATE PER STD. PLAN D4.4 WHERE LONGITUDINAL SLOPE EXCEEDS 4%.
3. WHEN BOLT DOWN GRATES ARE SPECIFIED, PROVIDE TWO SLOTS IN THE GRATE THAT ARE VERTICALLY ALIGNED WITH THE HOLES IN THE FRAME. LOCATION OF BOLT DOWN SLOTS VARIES AMONG DIFFERENT MANUFACTURERS.
4. REFER TO WSDOT STANDARD SPECIFICATION 9-05.15(2) FOR ADDITIONAL REQUIREMENTS.
5. FOR FRAME DETAIL, SEE STD. PLAN D4.2
6. THE THICKNESS OF THE GRATE SHALL NOT EXCEED 1-5/8".

NO.	REVISIONS	DATE	BY

DWG: D4-3.dwg

Department of Public Works
CLARK COUNTY WASHINGTON
proud past, promising future

HERRINGBONE GRATE FOR CATCH BASIN
APPROVED
Peter Capen — COUNTY ENGINEER — 01/01/04 DATE
STANDARD D4.3
PLAN No.
DESIGNED SCH
DRAWN SCH
DATE 02/20/03

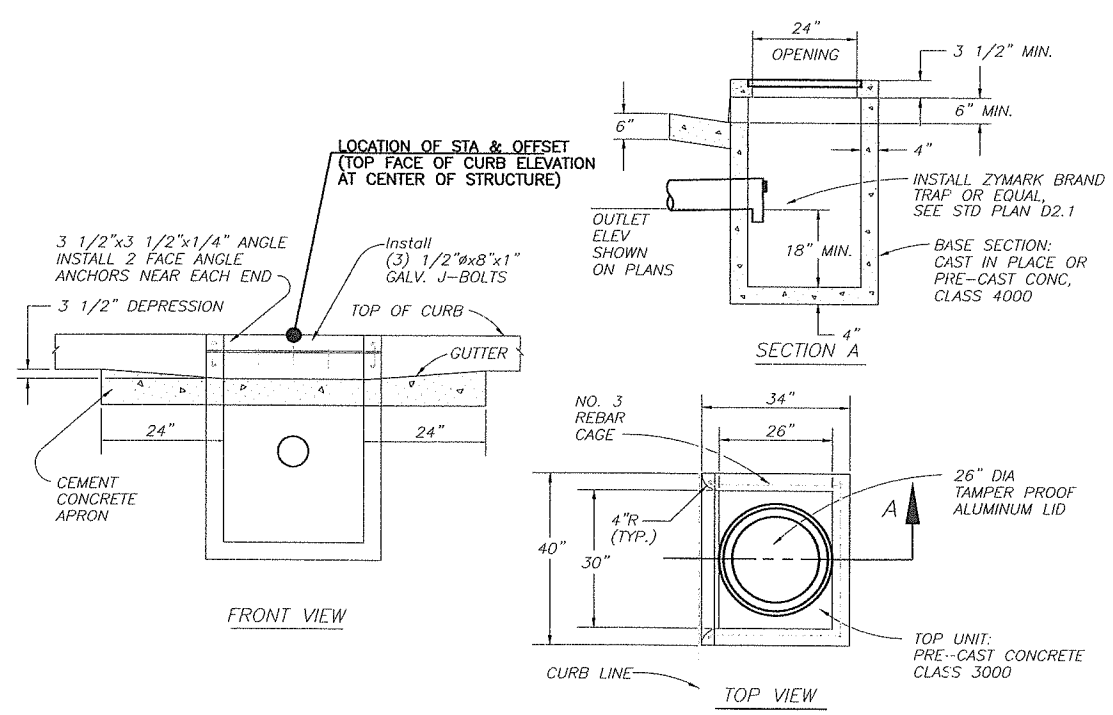

CURB INLET DETAIL
NTS

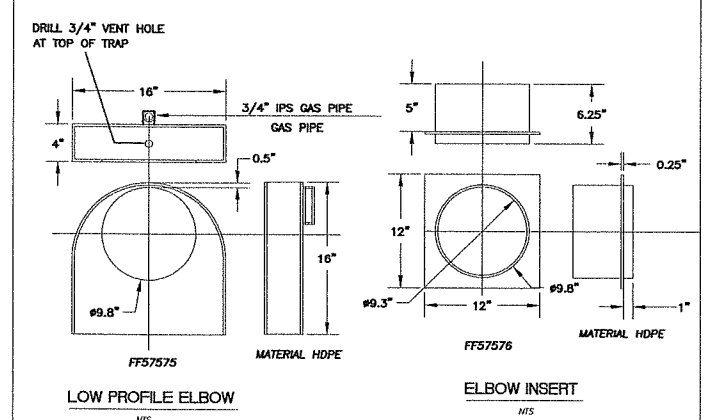

LOW PROFILE ELBOW
NTS

ELBOW INSERT
NTS

ZYMARK BRAND OR EQUIVALENT

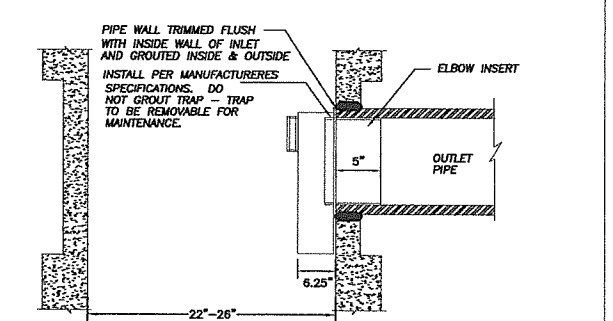

NO.	REVISIONS	DATE	BY

DWG: D2-1.DWG

Department of Public Works
CLARK COUNTY WASHINGTON
proud past, promising future

CATCH BASIN OUTLET PIPE TRAP
APPROVED
Peter Capen — COUNTY ENGINEER — 01/01/04 DATE
STANDARD D2.1
PLAN No.
DESIGNED SCH
DRAWN SCH
DATE 09/23/02

DESIGNED:	SLW
DRAWN:	GME
CRP:	330422
HORIZ.	NA
VERT.	NA
DATE:	8/27/2004
DWG:	D03
SHEET	15 OF 81

CALL 48 HOURS BEFORE YOU DIG 1-800-424-5555 "It's the Law"
NORTHWEST UTILITIES NOTIFICATION CENTER

otak Incorporated
700 Washington St. Suite 401
Vancouver, WA 98660
Phone: (360) 737-9813
FAX: (360) 737-9651

DESIGN & ENGINEERING DIVISION
NE 63RD STREET IMPROVEMENTS

ROADWAY DRAINAGE DETAILS

NOT FOR CONSTRUCTION

proud past, promising future
CLARK COUNTY WASHINGTON

V: SHERYL 08/24/04 6:23pm --> V:\PROJECT\11900\11944\DWG\C944S013.DWG

V: SHERYL 08/24/04 6:24pm --> V:\PROJECT\11900\11944\DWG\C944S014.DWG

XREF LIST
Ltscale: 40
Resolved
C944x001_border
PKW WASH
Unresolved
C978X001

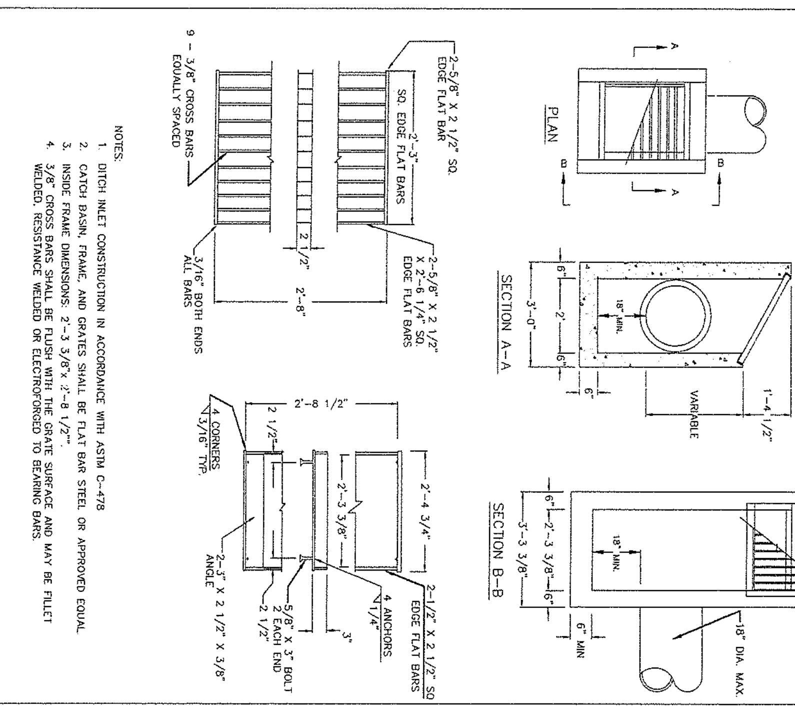

Department of Public Works
CLARK COUNTY WASHINGTON
proud past, promising future

DITCH INLET
APPROVED
STANDARD D6

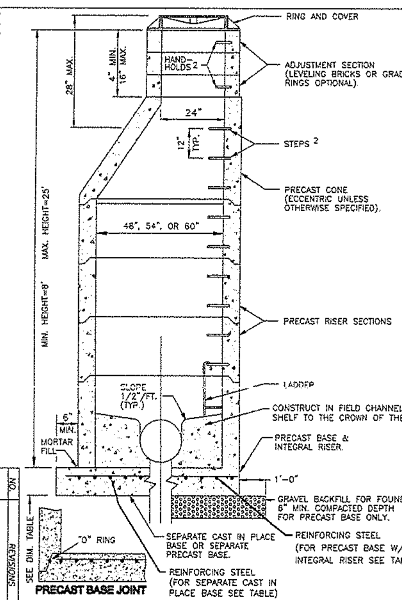

NOTES:

1. MANHOLES SHALL BE CONSTRUCTED IN ACCORDANCE WITH AASHTO M199 UNLESS OTHERWISE SHOWN ON PLANS OR NOTED IN THE WSDOT/APWA STANDARD SPECIFICATIONS.
2. HANDHOLDS IN ADJUSTMENT SECTION SHALL HAVE 3" MIN. CLEARANCE. STEPS IN MANHOLE SHALL HAVE 6" MIN. CLEARANCE. SEE PLAN NO. D1.5, "MANHOLE DETAILS." HANDHOLDS SHALL BE PLACED IN ALTERNATING GRADE RINGS OR LEVELING BRICK COURSE WITH A MIN. OF ONE HAND HOLD BETWEEN THE LAST STEP AND THE TOP OF THE MANHOLE.
3. ALL REINFORCED CAST–IN–PLACE CONCRETE SHALL BE CLASS 4000. ALL PRECAST CONCRETE SHALL BE CLASS 4000. NON–REINFORCED CONCRETE IN CHANNEL AND SHELF SHALL BE CLASS 3000.
4. PRECAST BASES SHALL BE FURNISHED WITH CUTOUTS OR KNOCKOUTS. KNOCKOUTS SHALL HAVE WALL THICKNESS OF 2" MIN. UNUSED KNOCKOUTS NEED NOT BE GROUTED IF WALL IS LEFT INTACT. PIPES SHALL BE INSTALLED ONLY IN FACTORY KNOCKOUTS UNLESS OTHERWISE APPROVED BY THE ENGINEER.
5. KNOCKOUT OR CUTOUT HOLE SIZE SHALL EQUAL PIPE OUTER DIAM. PLUS MANHOLE WALL THICKNESS. SEE MANHOLE DIMENSION TABLE BELOW.
6. MANHOLE RINGS AND COVERS SHALL BE IN ACCORDANCE WITH SEC. 7.05 AND MEET THE STRENGTH REQUIREMENTS OF FEDERAL SPECIFICATION RR–F–621D. MATING SURFACES SHALL BE FINISHED TO ASSURE NON–ROCKING FIT WITH ANY COVER POSITION.
7. ALL BASE REINFORCING STEEL SHALL HAVE A MIN. YIELD STRENGTH OF 60,000 PSI AND BE PLACED IN THE UPPER HALF OF THE BASE WITH 1" MIN. CLEARANCE.
8. FOR HEIGHTS OF 12' OR LESS, MIN. SOIL BEARING VALUE SHALL EQUAL 3,300 POUNDS PER SQUARE FOOT. FOR HEIGHTS OVER 12', MIN. SOIL BEARING VALUE SHALL EQUAL 3,800 POUNDS PER SQUARE FOOT.
9. FOR DETAILS SHOWING GRADE RING, LADDER, STEPS, HANDHOLDS, AND TOP SLABS, SEE PLAN NO. D1.5, "MANHOLE DETAILS."
10. INSIDE DROP MAXIMUM TO BE 4' VERTICAL DISTANCE I.E. TO I.E.
11. KNOCKOUTS TO BE USED WHEN STUB OUT PIPE IS 3' OR LESS.
12. MINIMUM 0.20' FALL BETWEEN INLET AND OUTLET, ANY REDUCTION IN THIS DESIGN REQUIREMENT MUST BE APPROVED BY REVIEWING AUTHORITY.
13. SEE THE WSDOT/APWA STANDARD SPECIFICATIONS SEC. 7–05.3 FOR JOINT REQUIREMENTS.

MANHOLE DIMENSION TABLE

DIA.	THICKNESS		MAXIMUM KNOCKOUT SIZE	MINIMUM DISTANCE BETWEEN KNOCKOUTS	BASE REINFORCING STEEL SQ IN/FT EACH DIRECTION	
	WALL	BASE			INTEGRAL BASE	SEPARATE BASE
48"	4"	6"	36"	8"	0.15	0.23
54"	4.5"	8"	42"	8"	0.19	0.19
60"	5"	8"	48"	8"	0.25	0.25

Department of Public Works
CLARK COUNTY WASHINGTON
proud past, promising future

STANDARD MANHOLE TYPE 1 48", 54", & 60"
APPROVED
STANDARD D1.1

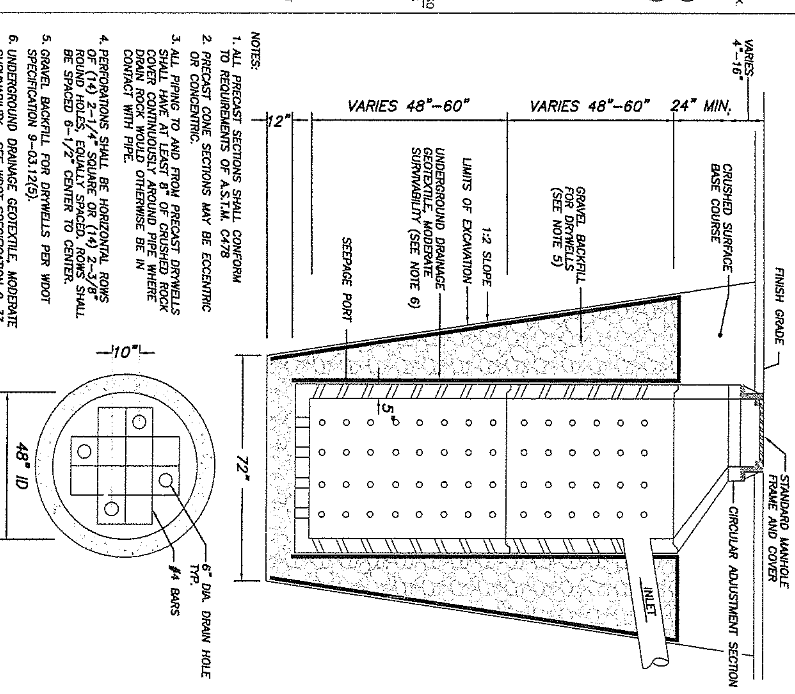

Department of Public Works
CLARK COUNTY WASHINGTON
proud past, promising future

PRECAST DRYWELL
APPROVED
STANDARD D10

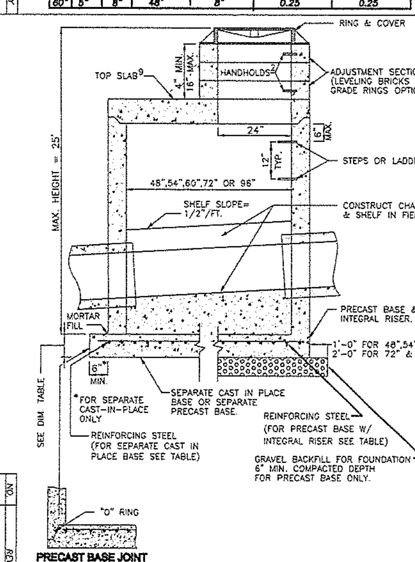

NOTES:

1. MANHOLES SHALL BE CONSTRUCTED IN ACCORDANCE WITH AASHTO M199 UNLESS OTHERWISE SHOWN ON PLANS OR NOTED IN THE WSDOT/APWA STANDARD SPECIFICATIONS.
2. HANDHOLDS IN ADJUSTMENT SECTION SHALL HAVE 3" MIN. CLEARANCE. STEPS IN MANHOLE SHALL HAVE 6" MIN. CLEARANCE. SEE PLAN D1.5, "MANHOLE DETAILS." HANDHOLDS SHALL BE PLACED IN ALTERNATING GRADE RINGS OR LEVELING BRICK COURSE WITH A MIN. OF ONE HANDHOLD BETWEEN THE LAST STEP AND THE TOP OF THE MANHOLE.
3. ALL REINFORCED CAST–IN–PLACE CONCRETE SHALL BE CLASS4000. NON–REINFORCED CONCRETE IN CHANNEL AND SHELF SHALL BE CLASS 3000. ALL PRECAST CONCRETE SHALL BE CLASS 4000.
4. PRECAST BASES SHALL BE FURNISHED WITH CUTOUTS OR KNOCKOUTS. KNOCKOUTS SHALL HAVE WALL THICKNESS OF 2" MIN. UNUSED KNOCKOUTS NEED NOT BE GROUTED IF WALL IS LEFT INTACT. PIPES SHALL BE INSTALLED ONLY IN FACTORY KNOCKOUTS UNLESS OTHERWISE APPROVED BY THE ENGINEER.
5. KNOCKOUT OR CUTOUT HOLE SIZE SHALL EQUAL PIPE OUTER DIAM. PLUS MANHOLE WALL THICKNESS. SEE MANHOLE DIMENSION TABLE BELOW.
6. MANHOLE RINGS AND COVERS SHALL BE IN ACCORDANCE WITH SEC. 7.05 AND MEET THE STRENGTH REQUIREMENTS OF FEDERAL SPECIFICATION RR–F–621D. MATING SURFACES SHALL BE FINISHED TO ASSURE NON–ROCKING FIT WITH ANY COVER POSITION.
7. ALL BASE REINFORCING STEEL SHALL HAVE A MIN. YIELD STRENGTH OF 60,000 PSI AND BE PLACED IN THE UPPER HALF OF THE BASE WITH 1" MIN. CLEARANCE.
8. FOR HEIGHTS OF 12' OR LESS, MIN. SOIL BEARING VALUE SHALL EQUAL 3,300 POUNDS PER SQUARE FOOT. FOR HEIGHTS OVER 12', MIN. SOIL BEARING VALUE SHALL EQUAL 3,800 POUNDS PER SQUARE FOOT.
9. FOR DETAILS SHOWING GRADE RING, LADDER, STEPS, HANDHOLDS, AND TOP SLABS, SEE PLAN D1.5, "MANHOLE DETAILS."
10. INSIDE DROP MAXIMUM TO BE 4' VERTICAL DISTANCE I.E. TO I.E.
11. KNOCKOUTS TO BE USED WHEN STUB OUT PIPE IS 3' OR LESS.
12. MINIMUM 0.20' FALL BETWEEN INLET AND OUTLET, ANY REDUCTION IN THIS DESIGN REQUIREMENT MUST BE APPROVED BY REVIEWING AUTHORITY.
13. SEE THE WSDOT/APWA STANDARD SPECIFICATIONS SEC. 7–05.3 FOR JOINT REQUIREMENTS.

MANHOLE DIMENSION TABLE

DIA.	THICKNESS		MAXIMUM KNOCKOUT SIZE	MINIMUM DISTANCE BETWEEN KNOCKOUTS	BASE REINFORCING STEEL SQ IN/FT EACH DIRECTION	
	WALL	BASE			INTEGRAL BASE	SEPARATE BASE
48"	4"	6"	36"	8"	0.15	0.23
54"	4.5"	8"	42"	8"	0.19	0.19
60"	5"	8"	48"	8"	0.25	0.25
72"	6"	8"	60"	12"	0.24	0.35
96"	8"	12"	84"	12"	0.29	0.39

Department of Public Works
CLARK COUNTY WASHINGTON
proud past, promising future

MANHOLE TYPE 3 48", 54", 60", 72", & 96"
APPROVED
STANDARD D1.3

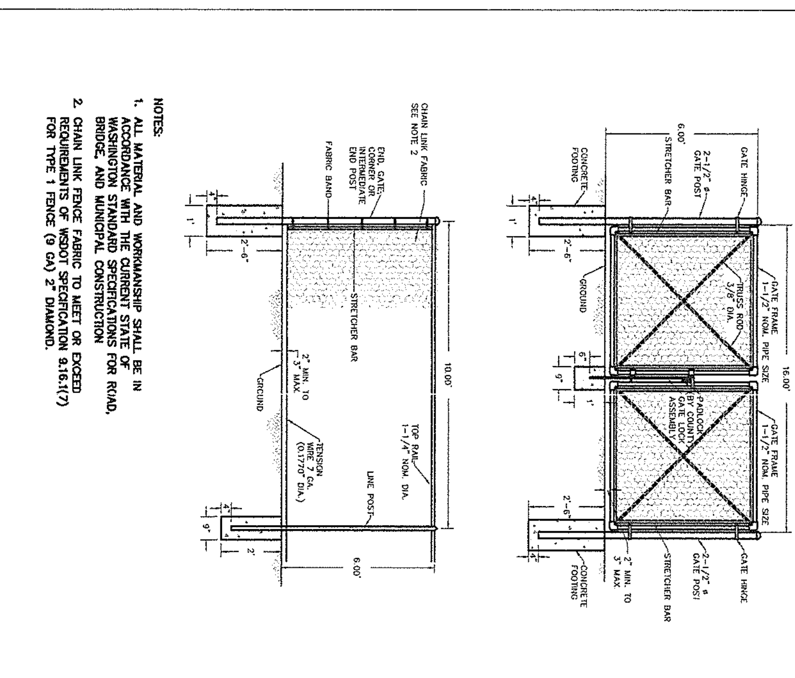

NOTES:

1. ALL MATERIAL AND WORKMANSHIP SHALL BE IN ACCORDANCE WITH THE CURRENT STATE OF WASHINGTON STANDARD SPECIFICATIONS FOR ROAD, BRIDGE, AND MUNICIPAL CONSTRUCTION.
2. CHAIN LINK FENCE FABRIC TO MEET OR EXCEED REQUIREMENTS OF WSDOT SPECIFICATION 9.16.1(7) FOR TYPE 1 FENCE (9 GA) 2" DIAMOND.

Department of Public Works
CLARK COUNTY WASHINGTON
proud past, promising future

STORMWATER FACILITY CHAIN LINK FENCE
APPROVED
STANDARD D26

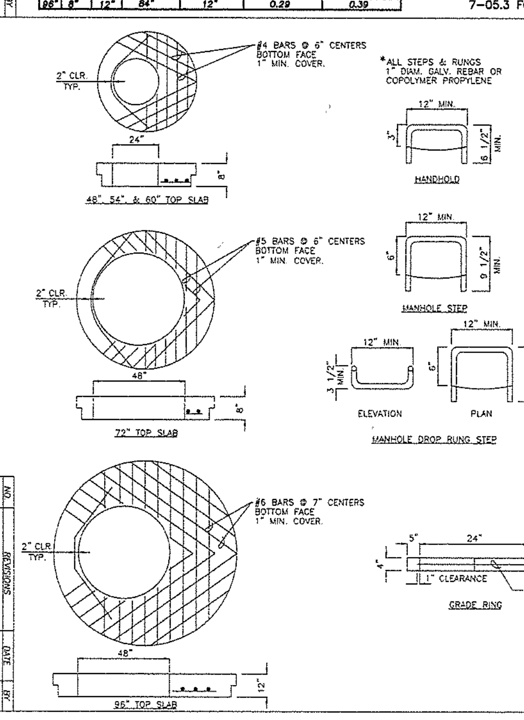

NOTES:

1. PROPRIETARY MANHOLE HANDHOLDS AND STEPS ARE ACCEPTABLE, PROVIDED THAT THEY CONFORM TO SEC. R, ASTM C478, AASHTO M199 AND MEET ALL WISHA REQUIREMENTS.
2. MANHOLE STEP/HANDHOLD LEGS SHALL BE PARALLEL OR APPROXIMATELY RADIAL AT THE OPTION OF THE MANUFACTURER, EXCEPT THAT ALL STEPS IN ANY MANHOLE SHALL BE SIMILAR. PENETRATION OF OUTER WALL BY A LEG IS PROHIBITED.
3. HANDHOLDS AND STOPS SHALL HAVE "DROP" RUNGS OR PROTUBERANCES TO PREVENT SIDEWAYS SLIP.
4. LADDERS OR STEPS SHALL EXTEND TO WITHIN 16" OF BOTTOM OF MANHOLE.
5. HANGING LADDERS SHALL BE PERMANENTLY FASTENED AT TOP BY HANGING ON STEP OR BY BOLTING OR EMBEDDING IN CONCRETE. EACH SHALL BE EMBEDDED AT BOTTOM IN BASE.
6. ADDITIONAL SAFETY FEATURES MAY BE REQUIRED IN VERY DEEP OR UNUSUAL STRUCTURES.

Department of Public Works
CLARK COUNTY WASHINGTON
proud past, promising future

MANHOLE DETAILS
APPROVED
STANDARD D1.5

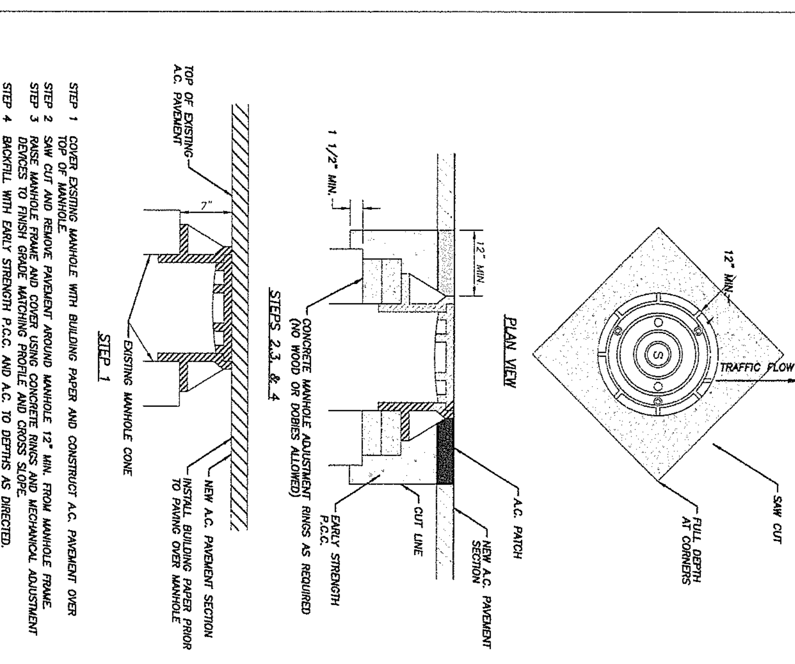

STEP 1 COVER EXISTING MANHOLE WITH BUILDING PAPER AND CONSTRUCT A.C. PAVEMENT OVER TOP OF MANHOLE.
STEP 2 SAW CUT AND REMOVE PAVEMENT AROUND MANHOLE 12" MIN. FROM MANHOLE FRAME.
STEP 3 RAISE MANHOLE FRAME AND COVER USING CONCRETE RINGS AND MECHANICAL ADJUSTMENT DEVICES TO FINISH GRADE MATCHING PROFILE AND CROSS SLOPE.
STEP 4 BACKFILL WITH EARLY STRENGTH P.C.C. AND A.C. TO DEPTHS AS DIRECTED.

Department of Public Works
CLARK COUNTY WASHINGTON

MANHOLE ADJUSTMENT DETAIL
APPROVED
F27

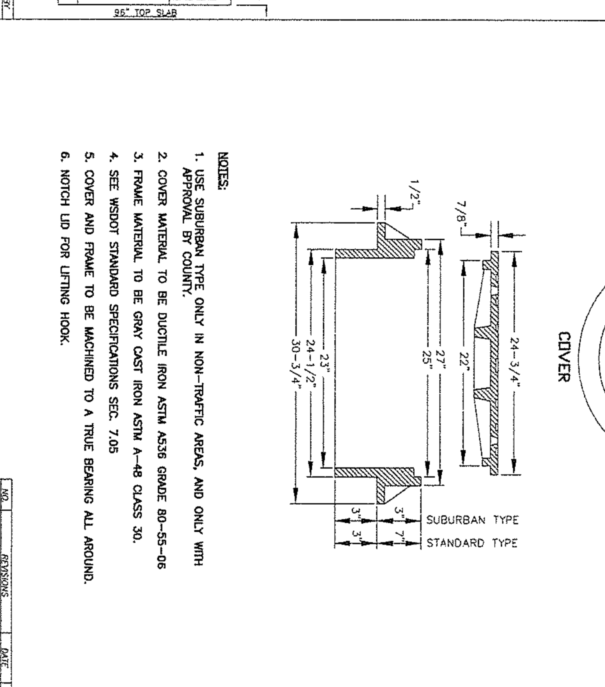

NOTES:

1. USE SUBURBAN TYPE ONLY IN NON–TRAFFIC AREAS, AND ONLY WITH APPROVAL BY COUNTY.
2. COVER MATERIAL TO BE DUCTILE IRON ASTM A536 GRADE 80–55–06
3. FRAME MATERIAL TO BE GRAY CAST IRON ASTM A–48 CLASS 30.
4. SEE WSDOT STANDARD SPECIFICATIONS SEC. 7.05
5. COVER AND FRAME TO BE MACHINED TO A TRUE BEARING ALL AROUND.
6. NOTCH LID FOR LIFTING HOOK.

Department of Public Works
CLARK COUNTY WASHINGTON
proud past, promising future

STANDARD MANHOLE FRAME AND COVER
APPROVED
STANDARD D1.6

NOT FOR CONSTRUCTION

proud past, promising future
CLARK COUNTY WASHINGTON

DESIGN & ENGINEERING DIVISION
NE 63RD STREET IMPROVEMENTS

ROADWAY DRAINAGE DETAILS

otak Incorporated
700 Washington St., Suite 401
Vancouver, WA 98660
Phone: (360) 737-9613
FAX: (360) 737-9651

CALL 48 HOURS BEFORE YOU DIG
1-800-424-5555
"It's the Law"
NORTHWEST UTILITIES NOTIFICATION CENTER

DESIGNED:	SLW
DRAWN:	GME
CRP:	330422
HORIZ.	NA
VERT.	NA
DATE:	8/27/2004
DWG:	D04
SHEET	16 OF 81

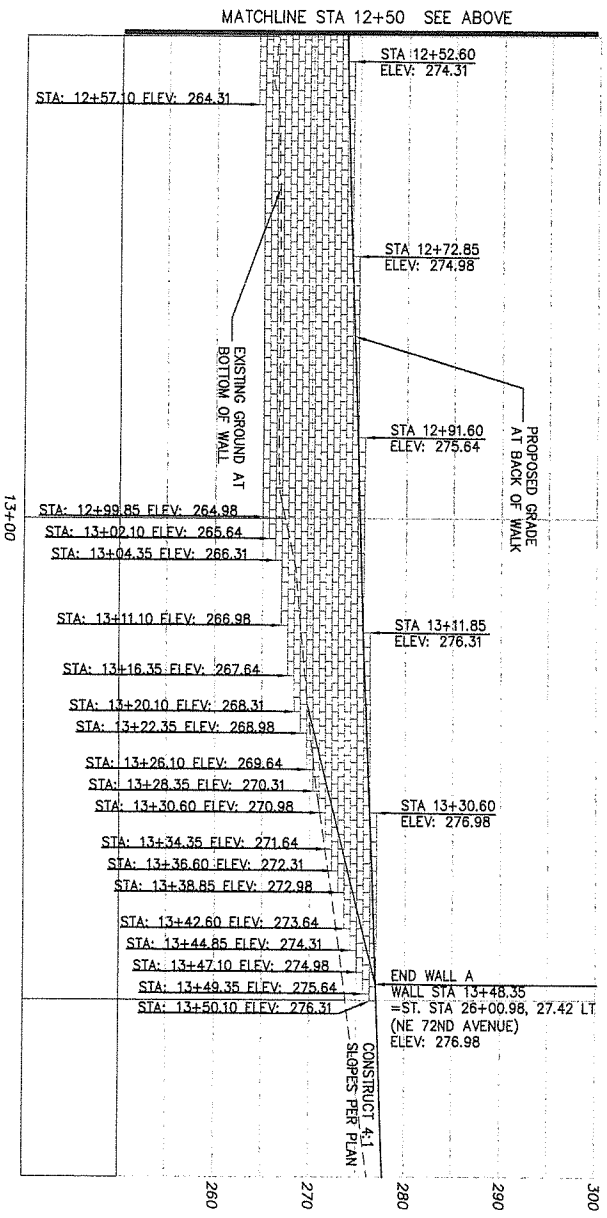

MODULAR BLOCK WALL "A"

SCALE: 1"=10' HORIZONTAL AND VERTICAL

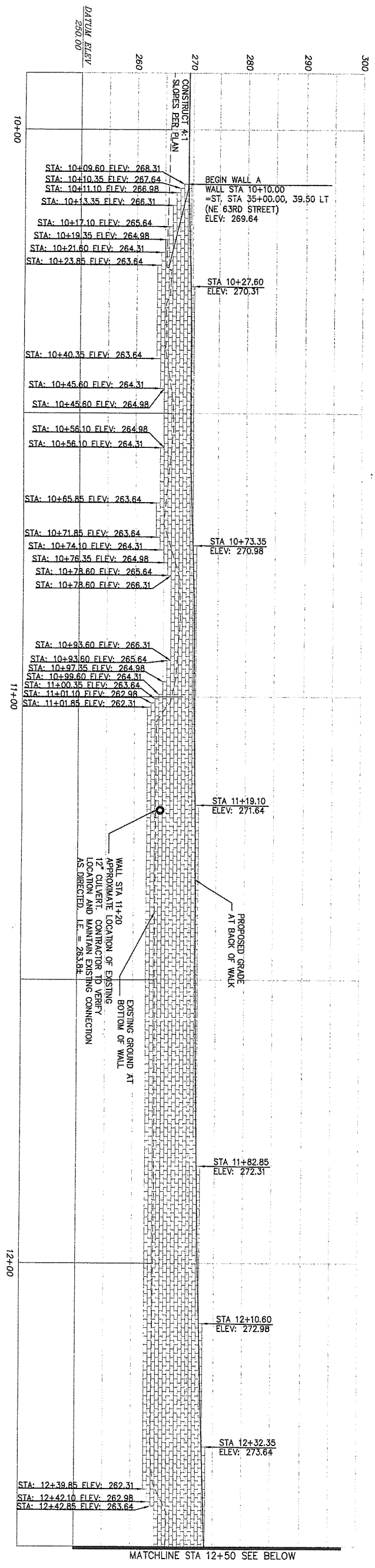

NOTES:

1. SEE SHEET RW5 FOR WALL DETAILS
2. OFFSETS SHOWN IN PROFILE ARE FROM PROPOSED CENTERLINE TO BACK OF SIDEWALK, UNLESS OTHERWISE NOTED.
3. INSTALL CHAIN LINK FENCE TYPE 6 (BLACK VINYL COATED) PER DETAIL SHEET RW5, FOR LENGTH OF WALL.

NOTE:
CONTRACTOR TO PROVIDE DESIGN PREPARED BY PROFESSIONAL ENGINEER. SEE SPECIAL PROVISIONS.

NOT FOR CONSTRUCTION

proud past, promising future
CLARK COUNTY
WASHINGTON

DESIGN & ENGINEERING DIVISION
NE 63RD STREET IMPROVEMENTS

RETAINING WALL PROFILES

otak Incorporated
700 Washington St., Suite 401
Vancouver, WA 98660
Phone: (360) 737-9613
FAX: (360) 737-9651

PAMELA KIEL WIEDEMANN
STATE OF WASHINGTON
22440
REGISTERED PROFESSIONAL ENGINEER
EXPIRES: AUG. 31, 2005

CALL 48 HOURS BEFORE YOU DIG
1-800-424-5555
"It's the Law"
NORTHWEST UTILITIES NOTIFICATION CENTER

DESIGNED:	SLW
DRAWN:	GME
CRP:	330422
HORIZ.	1" = 10'
VERT.	1" = 10'
DATE:	8/27/2004
DWG:	RW1
SHEET	17 OF 81

REF LIST
tscale: 10
resolved
944x001_border
944x511
KW WASH

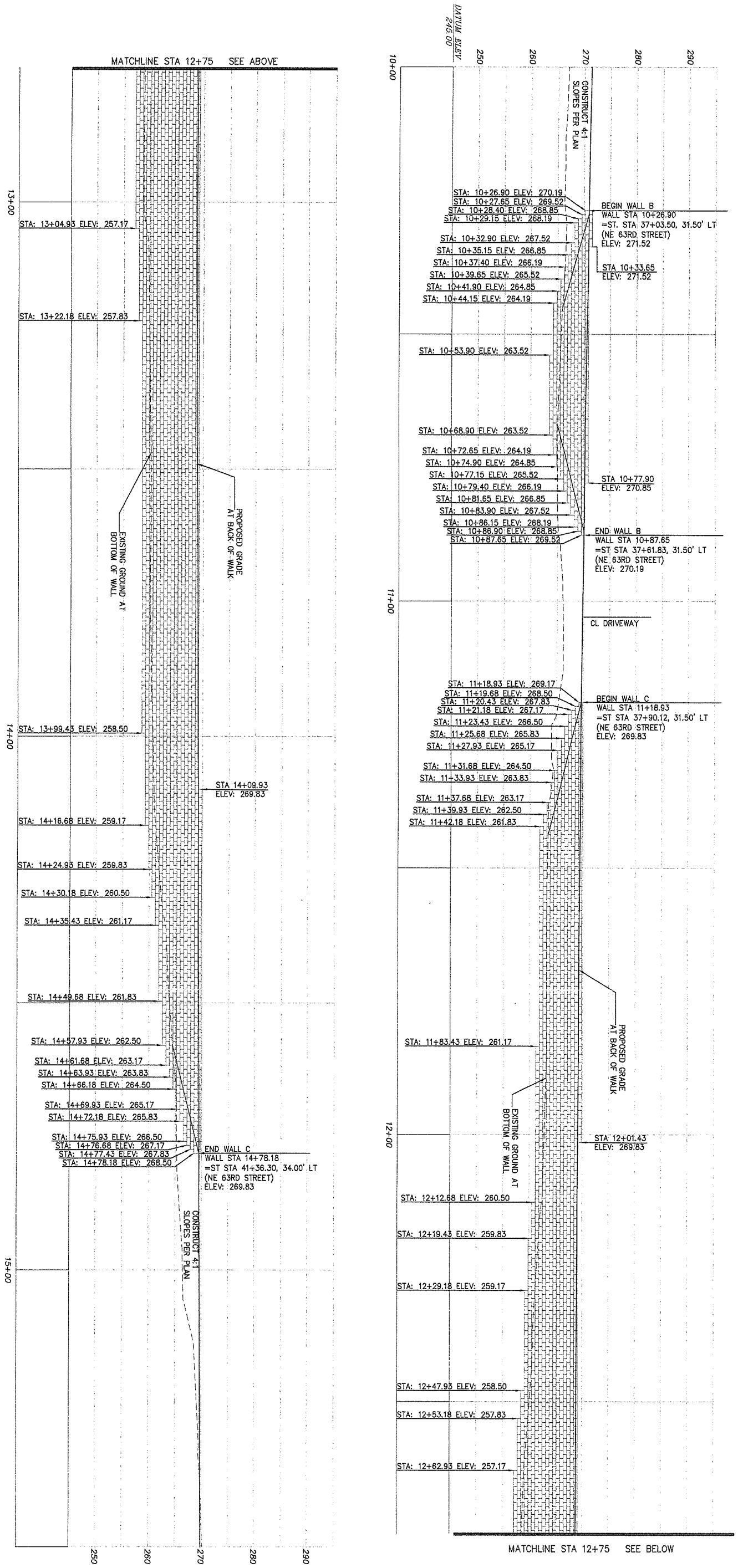

MODULAR BLOCK WALL "B" AND "C"

SCALE: 1"=10' HORIZONTAL AND VERTICAL

NOTES:

1. SEE SHEET RW5 FOR WALL DETAILS
2. OFFSETS SHOWN IN PROFILE ARE FROM PROPOSED CENTERLINE TO BACK OF SIDEWALK, UNLESS OTHERWISE NOTED.
3. INSTALL CHAIN LINK FENCE TYPE 6 (BLACK VINYL COATED) PER DETAIL SHEET RW5, FOR LENGTH OF WALL.

NOTE:
CONTRACTOR TO PROVIDE DESIGN PREPARED BY PROFESSIONAL ENGINEER. SEE SPECIAL PROVISIONS.

NOT FOR CONSTRUCTION

CLARK COUNTY WASHINGTON
proud past, promising future

DESIGN & ENGINEERING DIVISION
NE 63RD STREET IMPROVEMENTS

RETAINING WALL PROFILES

otak Incorporated
700 Washington St., Suite 401
Vancouver, WA 98660
Phone: (360) 737-9613
FAX: (360) 737-9651

PAMELA KIEL WIEDEMANN
STATE OF WASHINGTON
22440
REGISTERED PROFESSIONAL ENGINEER
EXPIRES: AUG. 31, 2005

CALL 48 HOURS BEFORE YOU DIG
1-800-424-5555
"It's the Law"
NORTHWEST UTILITIES NOTIFICATION CENTER

DESIGNED:	SLW
DRAWN:	GME
CRP:	330422
HORIZ.	1" = 10'
VERT.	1" = 10'
DATE:	8/27/2004
DWG:	RW2
SHEET	18 OF 81

REF LIST
tscale: 10
esolved
944x001_border
944x511
KW WASH

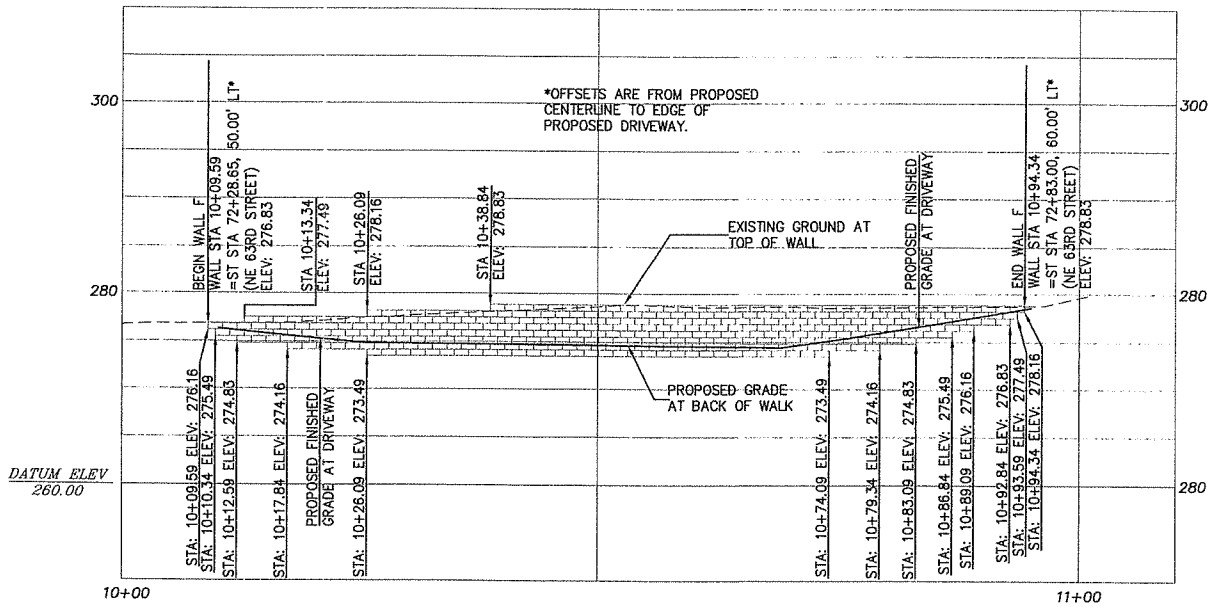

MODULAR BLOCK WALL "F"

SCALE: 1"=10' HORIZONTAL AND VERTICAL

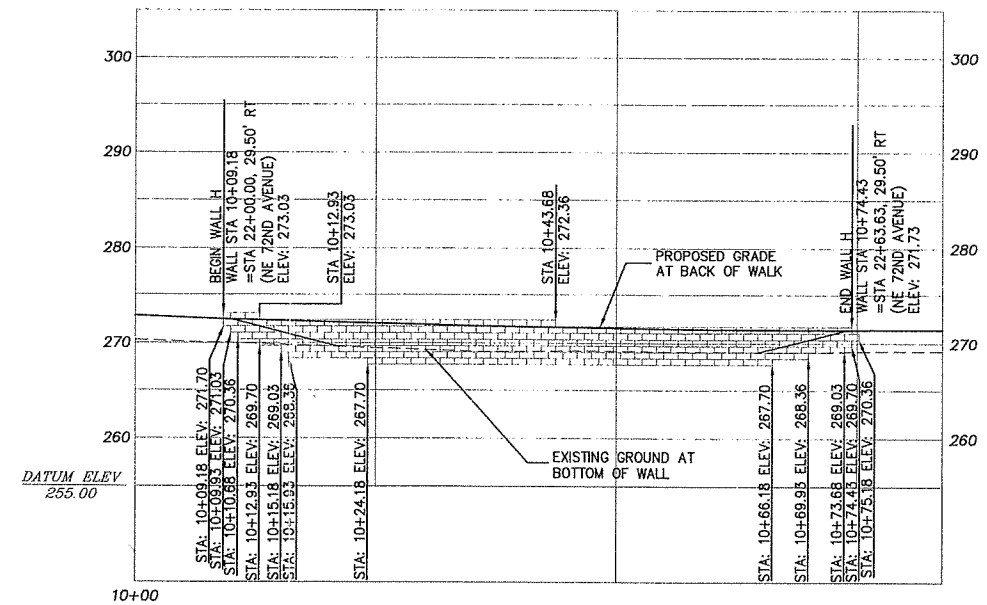

MODULAR BLOCK WALL "H"

SCALE: 1"=10' HORIZONTAL AND VERTICAL

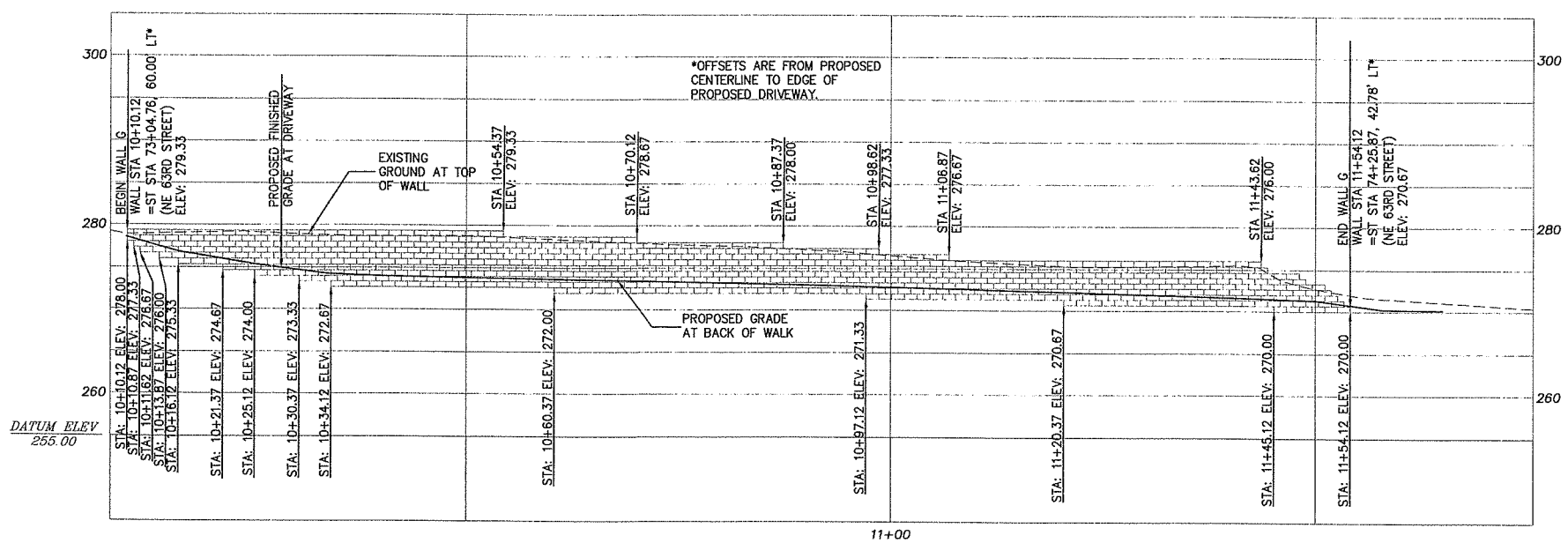

MODULAR BLOCK WALL "G"

SCALE: 1"=10' HORIZONTAL AND VERTICAL

NOTE:

CONTRACTOR TO PROVIDE DESIGN PREPARED BY PROFESSIONAL ENGINEER. SEE SPECIAL PROVISIONS.

NOTES:

1. SEE SHEET RW5 FOR WALL DETAILS
2. OFFSETS SHOWN IN PROFILE ARE FROM PROPOSED CENTERLINE TO BACK OF SIDEWALK, UNLESS OTHERWISE NOTED.
3. INSTALL CHAIN LINK FENCE TYPE 6 (BLACK VINYL COATED) PER DETAIL SHEET RW5, FOR LENGTH OF WALL.

NOT FOR CONSTRUCTION

DESIGN & ENGINEERING DIVISION
NE 63RD STREET IMPROVEMENTS

RETAINING WALL PROFILES

DESIGNED:	SLW
DRAWN:	GME
CRP:	330422
HORIZ.	1" = 10'
VERT.	1" = 10'
DATE:	8/27/2004
DWG:	RW3
SHEET	19 OF 81

CALL 48 HOURS BEFORE YOU DIG 1-800-424-5555 "It's the Law" NORTHWEST UTILITIES NOTIFICATION CENTER

STEVEN L. WEDEMANN, STATE OF WASHINGTON, 22440, REGISTERED PROFESSIONAL ENGINEER, EXPIRES AUG. 31, 2005

oak Incorporated
700 Washington St., Suite 401
Vancouver, WA 98660
Phone: (360) 737-9613
FAX: (360) 737-9651

proud past, promising future
CLARK COUNTY WASHINGTON

V: SHERYL 08/24/04 6:26pm --> V:\PROJECT\11900\11944\DWG\C9445017.DWG

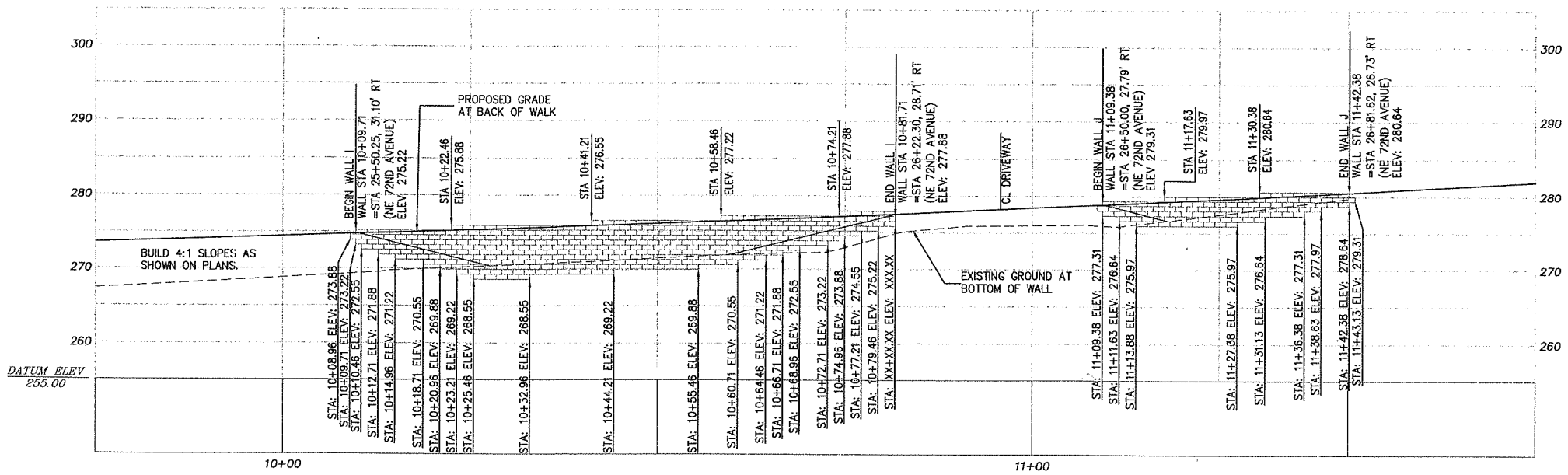

MODULAR BLOCK WALL "I," AND "J"

SCALE: 1"=10' HORIZONTAL AND VERTICAL

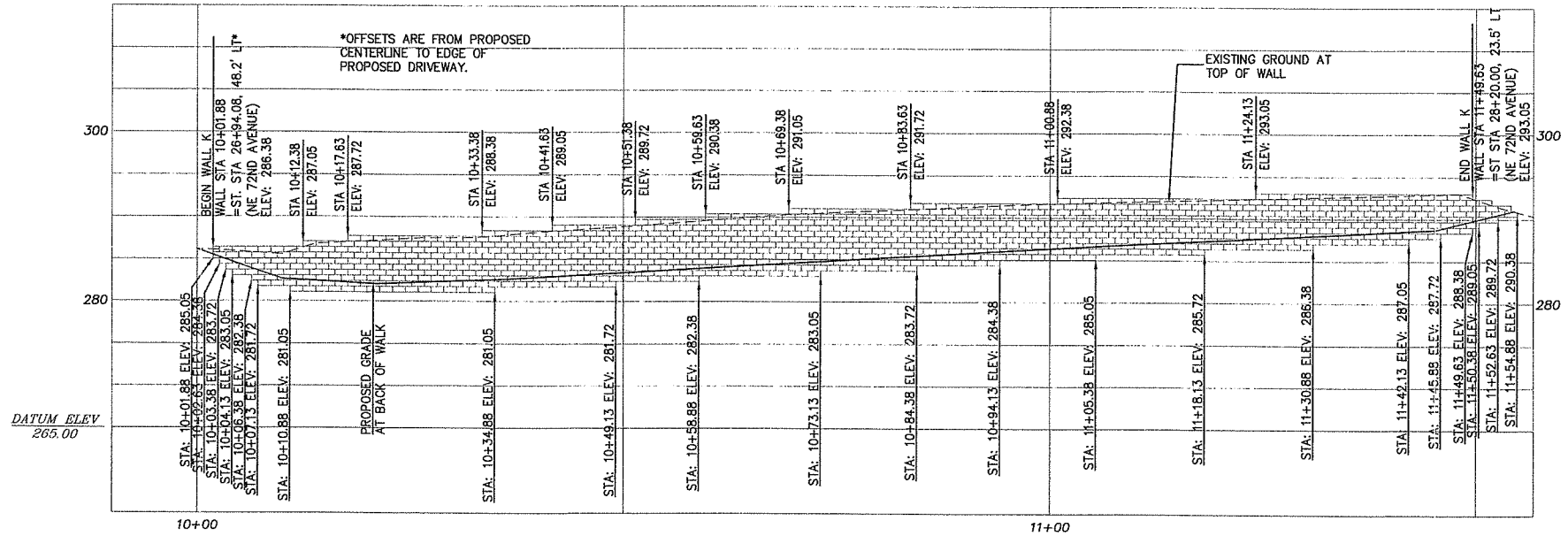

MODULAR BLOCK WALL "K"

SCALE: 1"=10' HORIZONTAL AND VERTICAL

NOTE:

CONTRACTOR TO PROVIDE DESIGN PREPARED BY PROFESSIONAL ENGINEER. SEE SPECIAL PROVISIONS.

NOTES:

1. SEE SHEET RW5 FOR WALL DETAILS
2. OFFSETS SHOWN IN PROFILE ARE FROM PROPOSED CENTERLINE TO BACK OF SIDEWALK, UNLESS OTHERWISE NOTED.
3. INSTALL CHAIN LINK FENCE TYPE 6 (BLACK VINYL COATED) PER DETAIL SHEET RW5, FOR LENGTH OF WALL.

NOT FOR CONSTRUCTION

DESIGN & ENGINEERING DIVISION
NE 63RD STREET IMPROVEMENTS

RETAINING WALL PROFILES

DESIGNED:	SLW
DRAWN:	GME
CRP:	330422
HORIZ.	1" = 10'
VERT.	1" = 10'
DATE:	8/27/2004
DWG:	RW4
SHEET	20 OF 81

CALL 48 HOURS BEFORE YOU DIG 1-800-424-5555 "It's the Law" NORTHWEST UTILITIES NOTIFICATION CENTER

PAMELA J. LEDERMANN STATE OF WASHINGTON 38255 REGISTERED PROFESSIONAL ENGINEER EXPIRES AUG. 31, 2005

otak Incorporated
700 Washington St. Suite 401
Vancouver, WA 98660
Phone: (360) 737-9613
FAX: (360) 737-9651

proud past, promising future
CLARK COUNTY WASHINGTON

REF LIST
tscale: 10
resolved
944x001_border
944x511
KW WASH

V: JOHNM 08/26/04 3:38pm --> R:\DWG\C9445018.DWG

GENERAL NOTES

Design criteria:

1. Retaing walls will be contractor design build
2. AASHTO Standard Specifications for Highway Bridges, 17th Ed., 2002
3. Factors of safety— Pullout 1.5
   Sliding 1.5
   Overturning 2.0
   Bearing 2.5
4. Wall foundations shall be designed for a maximum allowable bearing capacity of 2500 psf
5. Soil Properties— Retained Soil UW = 130 pcf, phi = 30 deg
   Granular Reinforced Backfill UW = 140 pcf phi = 35 deg
   Foundation Soil UW = 130 pcf phi = 30 deg
   Foundation soil in wetland areas UW = 120 pcf phi = 20 deg
6. Traffic live load surcharge on walls 6.5' or higher in a fill shall be 60 psf lateral pressure acting horizontally on back face of wall
7. Pedestrian live load surcharge shall be 85 psf acting vertically on sidewalk uniform for all walls in a fill situation.

Construction Methods:

1. All work shall conform to the Washington Department of Transportation Standard Specifications, 2004 Edition
2. The contractor shall verify the existence of utilities in the field prior to commencement of retaining wall work
3. The contractor is responsible to coordinate all construction of obstructions/appurtences/utilities/drainage systems with the construction of the retaining walls
4. Foundations of walls located in a wetland area shall be overexcavated approximately 18" below required embedment depth and backfilled with compacted crushed rock (WSDOT Standard Specifications Gravel Backfill for Walls 9-03.12(2)).
5. Walls not requiring soil reinforcement shall have a minimum 12" layer of crushed surfacing base course placed directly behind the back face of wall
6. All walls shall have a 6" dia PVC drainpipe wrapped in a geotextile fabric located as shown in cross section. Pipes to daylight at end of wall or be connected to storm drain system as shown in Plans.

Materials

1. Provide a minimum service life of 75 years for all components

NOTE:
CONTRACTOR TO PROVIDE DESIGN PREPARED BY PROFESSIONAL ENGINEER. SEE SPECIAL PROVISIONS.

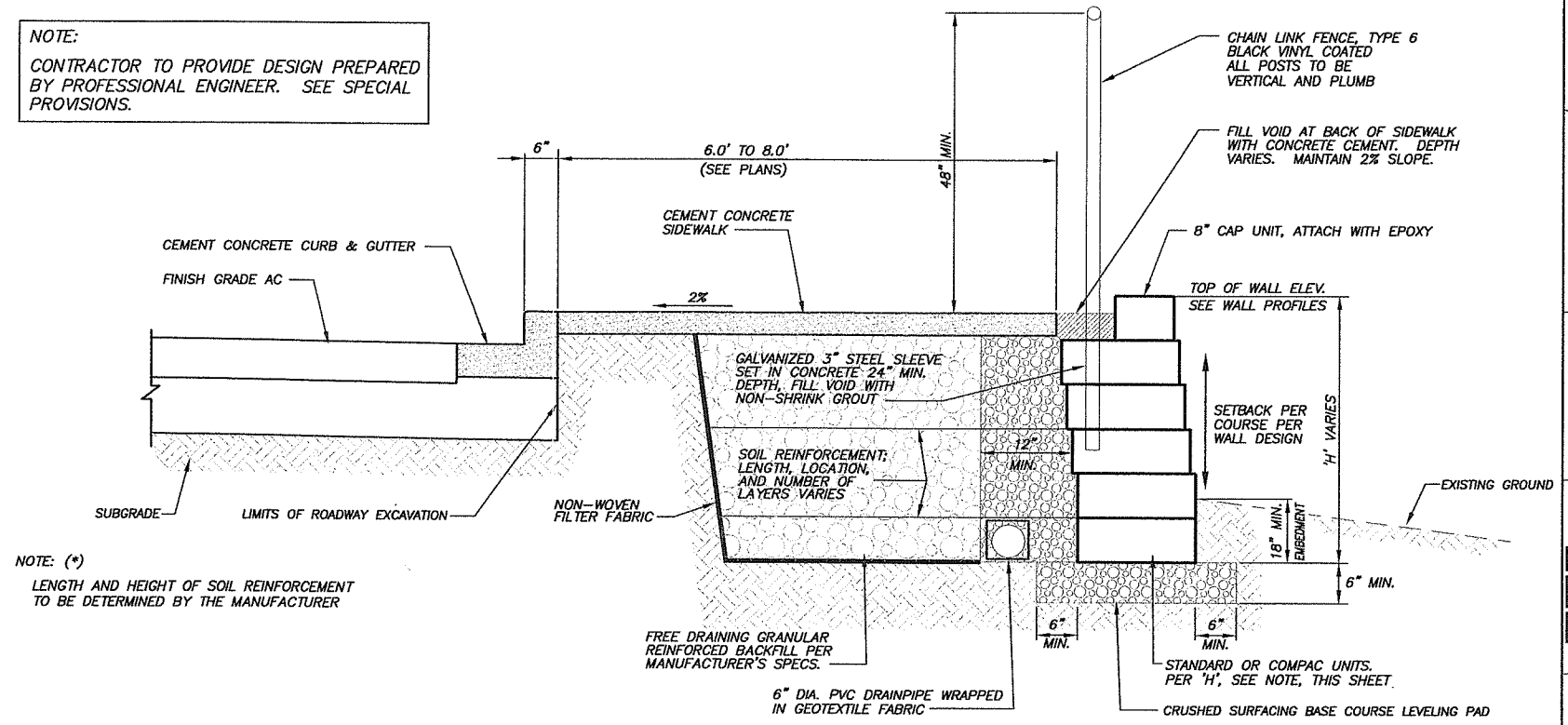

NOTE: (*)
LENGTH AND HEIGHT OF SOIL REINFORCEMENT TO BE DETERMINED BY THE MANUFACTURER

TYPICAL MODULAR BLOCK WALL (FILL)

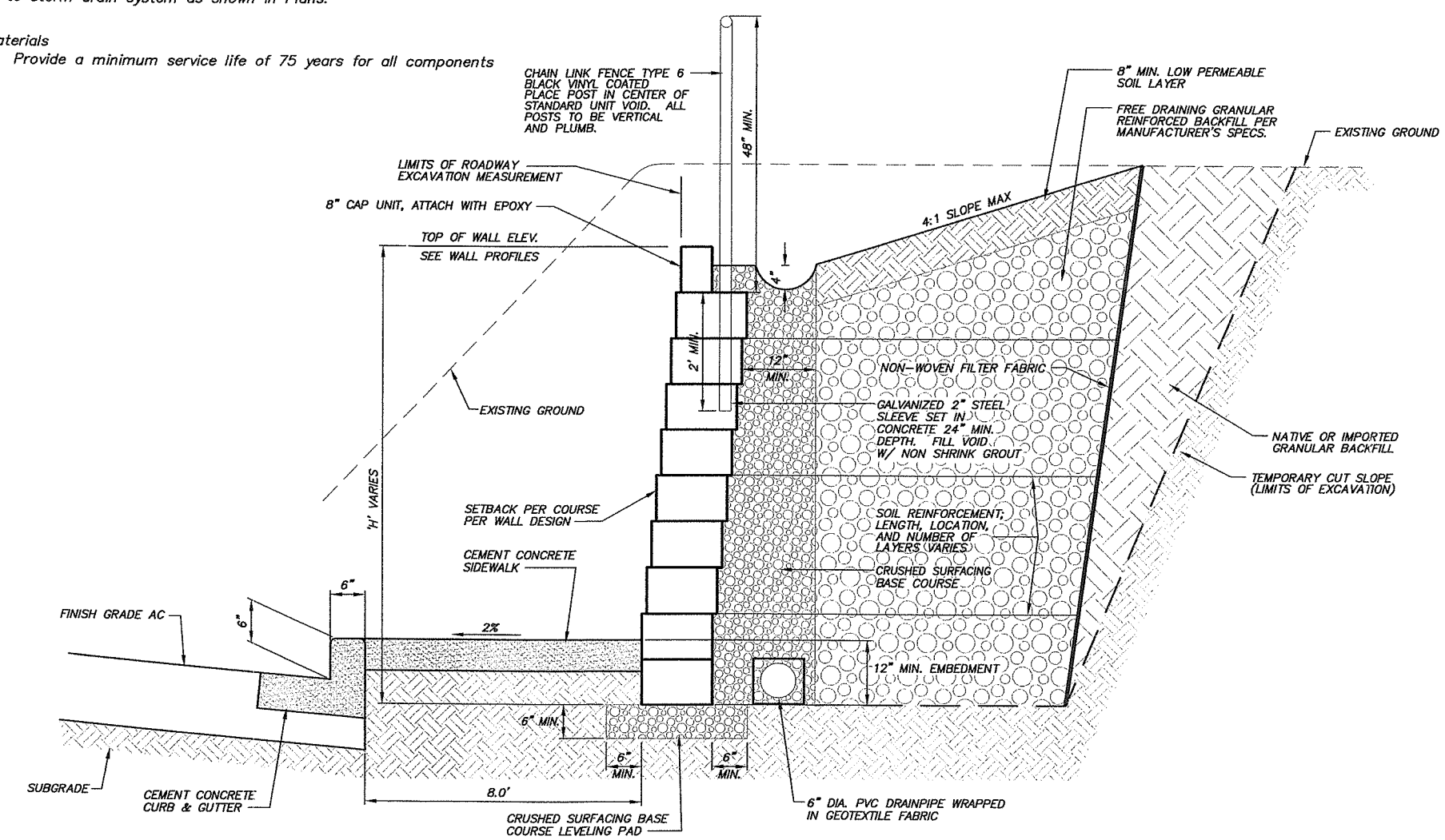

TYPICAL MODULAR BLOCK WALL (CUT)

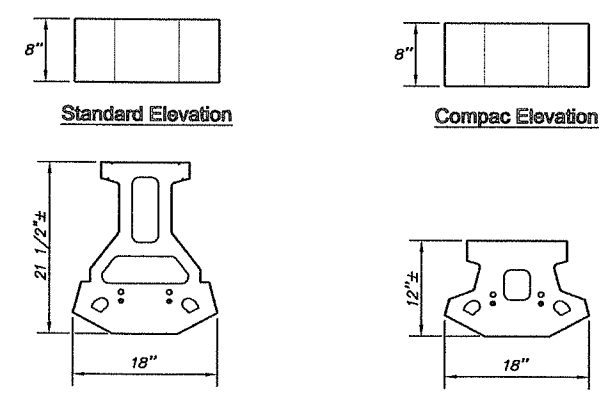

STANDARD UNIT **COMPAC UNIT**

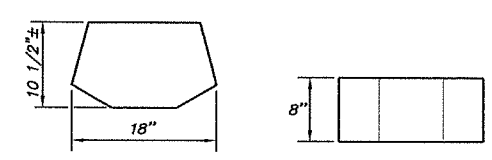

CAP UNIT

MASONRY BLOCKS
(KEYSTONE OR EQUIVALENT)

NOTES:
1. USE COMPAC UNITS WHERE "H"=3.0' MAX.
2. USE STANDARD UNITS WHERE "H" EXCEEDS 3.0'.

NOT FOR CONSTRUCTION

DESIGNED: SLW
DRAWN: JRM
CRP: 330422
HORIZ. NA
VERT. NA
DATE: 8/27/2004
DWG: RW5
SHEET 21 OF 81

CALL 48 HOURS BEFORE YOU DIG 1-800-424-5555 "It's the Law" NORTHWEST UTILITIES NOTIFICATION CENTER

PAMELA K. EL WIEDEMANN STATE OF WASHINGTON 37146 PROFESSIONAL ENGINEER EXPIRES AUG 31, 2005

otak Incorporated
700 Washington St. Suite 401
Vancouver, WA 98660
Phone: (360) 737-8613
FAX: (360) 737-9851

DESIGN & ENGINEERING DIVISION
NE 63RD STREET IMPROVEMENTS

RETAINING WALL DETAILS

proud past, promising future
CLARK COUNTY WASHINGTON

V: SHERYL 08/24/04 6:32pm --> V:\PROJECT\11900\11944\DWG\C9445018.DWG

XREF LIST
Ltscale: 1
Resolved
C944X001_BORDER
C944X500
C944X600
MJRROADS
PKW WASH
ROADS
S944B101
S944B104
S944B106
S944B200

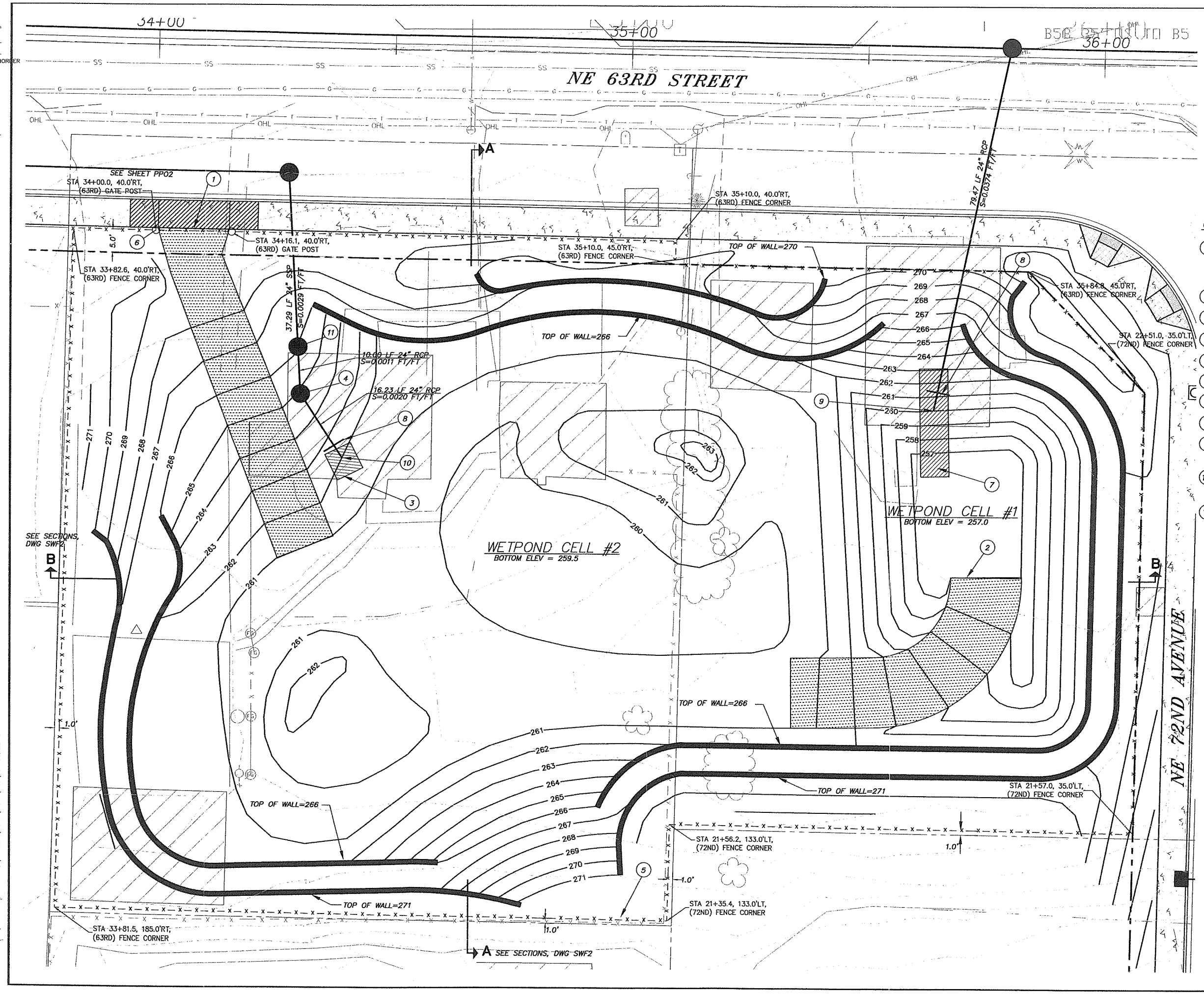

SCALE IN FEET
10 0 10 20

CONSTRUCTION NOTES

1. N.E. 63RD ST. STA. 34+08.07, 39.50' RT BEGIN MAINTENANCE ROAD AT 14.3% MAX GRADE (7H:1V) FROM SLOPE TO POND BOTTOM. CONSTRUCT TO LIMITS SHOWN. SEE MAINTENANCE ROAD DETAIL DWG SWF2.
2. END MAINTENANCE ROAD N.E. 63RD ST. STA. 35+69.52, 117.96' RT
3. 6' X 6' OUTFALL, CONSTRUCT OPEN CELL MASONRY GRID.
4. OUTLET CONTROL STRUCTURE. SEE SHEET SWF3 FOR DETAILS.
5. INSTALL 712 LF± CHAIN LINK FENCE TYPE I (BLACK VINYL COATED), AS SHOWN ON PLAN.
6. 16' TYPE 1 CHAIN LINK GATE, SEE DWG D04.
7. 23' X 6' OUTFALL, CONSTRUCT OPEN CELL MASONRY GRID.
8. CONCRETE PIPE ANCHOR. SEE DWG SWF3.
9. POND INLET STA 35+65.25, 75.03' RT I.E. = 260.00 BEVEL END OF PIPE TO MATCH SLOPE.
10. POND OUTET STA 34+40.30, 87.65' RT I.E. = 262.03 BEVEL END OF PIPE TO MATCH SLOPE.
11. EMERGENCY OVERFLOW STRUCTURE. SEE SHEET SWF3 FOR DETAILS.

GENERAL NOTES

1. SEE SPECIAL PROVISIONS FOR CONSTRUCTION REQUIREMENTS. WETPOND CONSTRUCTION TO BE PERFORMED IN ACCORDANCE WITH SECTION V OF THE STORM WATER MANAGEMENT MANUAL FOR WESTERN WASHINGTON DATED AUGUST 2001.
2. REMOVE ALL TREES WITHIN FENCED LIMITS OF STORMWATER FACILITY.
3. SEE SHEET SWF2 FOR SECTION A–A AND B–B.
4. DEMOLISH AND REMOVE HOUSES, FENCES, AND OUT–BUILDINGS. DECOMMISSION UTILITIES AS DIRECTED.
5. SEE SHEET SWF2 FOR WALL SECTION.

DESIGNED:	SC
DRAWN:	KW
CRP:	330422
HORIZ.	1" = 20'
VERT.	NA
DATE:	8/27/2004
DWG:	SWF1
SHEET	22 OF 81

CALL 48 HOURS BEFORE YOU DIG
1-800-424-5555
"It's the Law"
NORTHWEST UTILITIES NOTIFICATION CENTER

STEVEN L. WEDEMANN
STATE OF WASHINGTON
22245
REGISTERED PROFESSIONAL ENGINEER
EXPIRES AUG. 31, 2005

otak Incorporated
700 Washington St. Suite 401
Vancouver, WA. 98660
Phone: (360) 737-8813
FAX: (360) 737-9651

DESIGN & ENGINEERING DIVISION
NE 63RD STREET IMPROVEMENTS
STORMWATER FACILITY PLAN

NOT FOR CONSTRUCTION

proud past, promising future
CLARK COUNTY WASHINGTON

V: SHERYL 08/25/04 12:45pm --> V:\PROJECT\11900\11944\DWG\C9445020.DWG

XREF LIST
Ltscale: 1
Resolved
C944X001_BORDER
PKW WASH

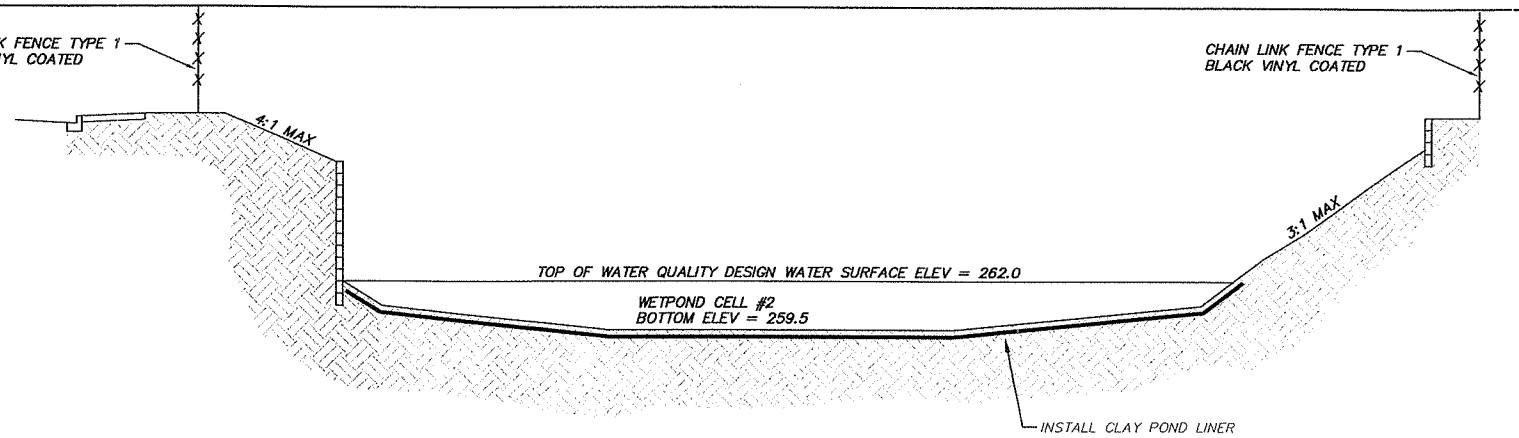

SECTION A-A

SCALE:
1"=10' HORIZONTAL
1"=4' VERTICAL

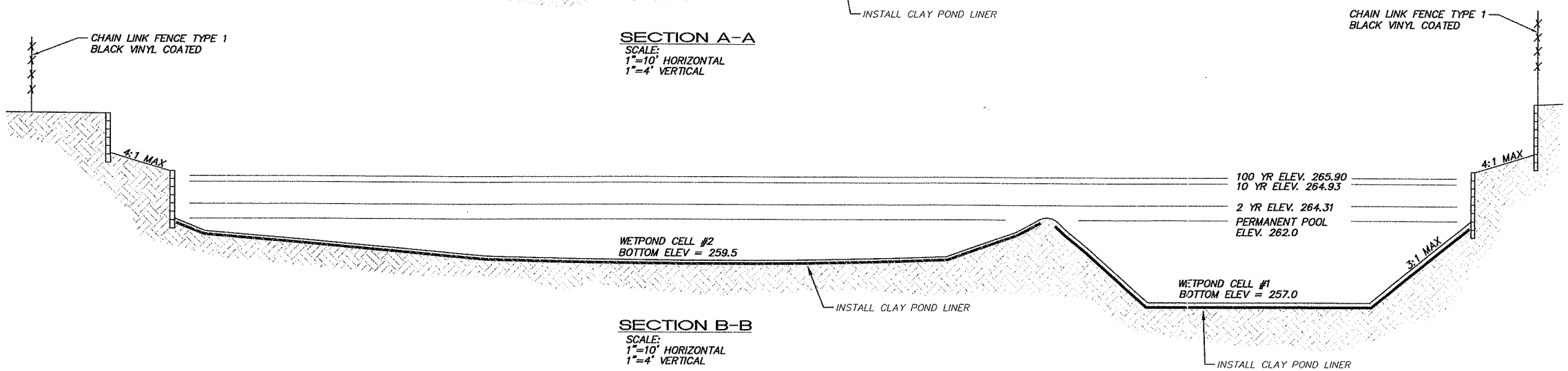

SECTION B-B

SCALE:
1"=10' HORIZONTAL
1"=4' VERTICAL

STORMWATER FACILITY CROSS SECTIONS

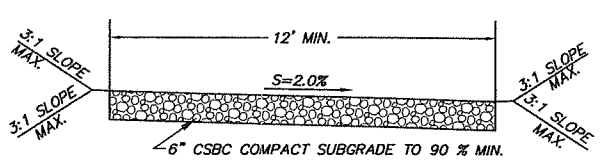

MAINTENANCE ROAD

N.T.S.

NOTE:

1. CONTRACTOR TO PROVIDE DESIGN PREPARED BY PROFESSIONAL ENGINEER. SEE SPECIAL PROVISIONS.
2. SEE DWG RW5 FOR MASONARY BLOCK DETAILS.

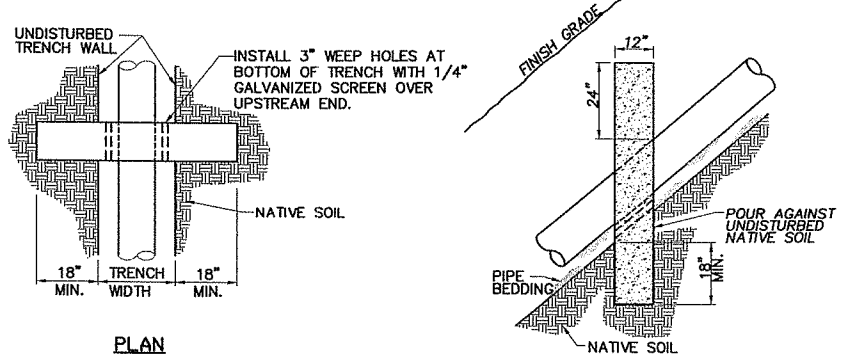

NOTES:

1. CONCRETE ANCHOR WALLS (COMMERCIAL GRADE CONCRETE) SHALL BE CONSTRUCTED USING FORMS WHEN SEWERS, STORM DRAINS AND OTHER PIPELINES ARE CONSTRUCTED WITH SLOPES 20% OR GREATER. REMOVE FORMS PRIOR TO BACKFILLING TRENCH.

CONCRETE PIPE ANCHOR DETAIL

N.T.S.

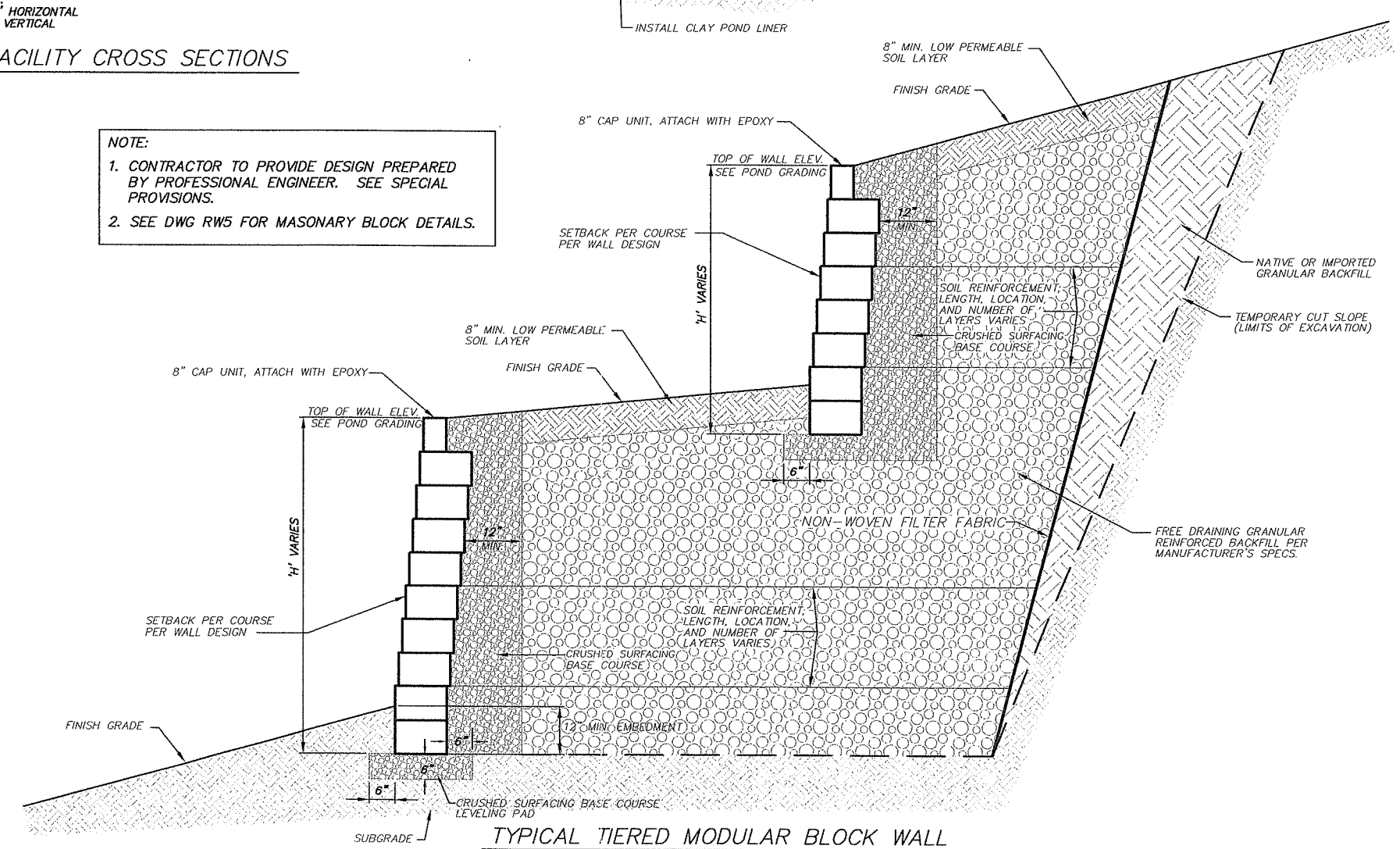

TYPICAL TIERED MODULAR BLOCK WALL

DESIGNED:	SC
DRAWN:	KW
CRP:	330422
HORIZ.	NA
VERT.	NA
DATE:	8/27/2004
DWG:	SWF2
SHEET	23 OF 81

CALL 48 HOURS BEFORE YOU DIG
1-800-424-5555
"It's the Law"
NORTHWEST UTILITIES NOTIFICATION CENTER

PAMELA K.E.L. WIEDEMANN
STATE OF WASHINGTON
21640
REGISTERED PROFESSIONAL ENGINEER
EXPIRES AUG. 31, 2005

otak Incorporated
700 Washington St., Suite 401
Vancouver, WA 98660
Phone: (360) 737-8613
FAX: (360) 737-9651

DESIGN & ENGINEERING DIVISION
NE 63RD STREET IMPROVEMENTS

STORMWATER FACILITY
SECTION DETAILS

NOT FOR CONSTRUCTION

proud past, promising future
CLARK COUNTY
WASHINGTON

V: SHERYL 08/24/04 6:36pm --> V:\PROJECT\11900\1194\DWG\C944S021.DWG

XREF LIST
Ltscale: 1
Resolved
C944X001_BORDER
PKW WASH

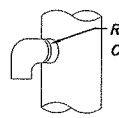

ORIFICE

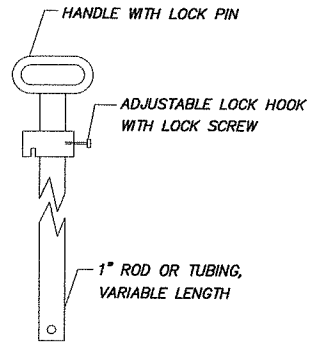

LIFT HANDLE

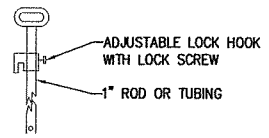

LIFT HANDLE DETAIL

NOTES

1. PIPE SUPPORTS AND RESTRICTOR/SEPARATOR SHALL BE CONSTRUCTED OF THE SAME MATERIAL AND BE ANCHORED AT A MAXIMUM SPACING OF 36". ATTACH PIPE SUPPORTS TO MANHOLE WITH 5/8" STAINLESS STEEL EXPANSION BOLTS OR EMBED SUPPORTS 2" INTO MANHOLE WALL.
2. THE VERTICAL RISER STEM OF THE RESTRICTOR/SEPARATOR SHALL BE THE SAME DIAMETER AS THE HORIZONTAL OUTLET PIPE, WITH A MINIMUM 8" DIAMETER.
3. THE FLOW RESTRICTOR/SEPARATOR SHALL BE FABRICATED FROM ONE OF THE FOLLOWING MATERIALS:
   0.60" CORRUGATED ALUMINUM ALLOY DRAIN PIPE
   0.64" CORRUGATED GALVANIZED OR ALUMINIZED STEEL DRAIN PIPE
   0.60" ALUMINUM ALLOY FLAT SHEET, IN ACCORDANCE WITH ASTM B 209M, 5052 H32 OR EPS GALVANIZED STEEL SHALL HAVE TREATMENT 1.
4. MULTI-ORIFICE ELBOWS MAY BE LOCATED AS SHOWN OR ALL ON ONE SIDE OF RISER TO ASSURE LADDER CLEARANCE. SIZE OF ELBOWS AND PLACEMENT TO BE SPECIFIED IN THE CONTRACT.
5. RESTRICTOR PLATE WITH ORIFICE AS SPECIFIED IN THE CONTRACT. OPENING IS TO BE CUT ROUND AND SMOOTH.
6. SHEAR GATE SHALL BE MADE OF ALUMINUM ALLOY IN ACCORDANCE WITH ASTM B 26M AND ASTM B 275, DESIGNATION ZG32A OR CAST IRON IN ACCORDANCE WITH ASTM A 48, CLASS 30B.
   LIFT HANDLE MAY BE SOLID ROD OR HOLLOW TUBING WITH ADJUSTABLE HOOK AS REQUIRED.
   NEOPRENE RUBBER GASKET REQUIRED BETWEEN RISER MOUNTING FLANGE AND GATE FLANGE.
   MATING SURFACES OF LID AND BODY SHALL BE MACHINED FOR PROPER FIT.
   FLANGE MOUNTING BOLTS SHALL BE 3/8" DIAMETER STAINLESS STEEL.
7. SHEAR GATE MAXIMUM OPENING SHALL BE CONTROLLED BY LIMITED HINGE MOVEMENT, STOP TAB OR SOME OTHER DEVICE.
8. ALTERNATE SHEAR GATE DESIGNS ARE ACCEPTABLE, IF MATERIAL SPECIFICATIONS ARE MET AND FLANGE BOLT PATTERN MATCHES.

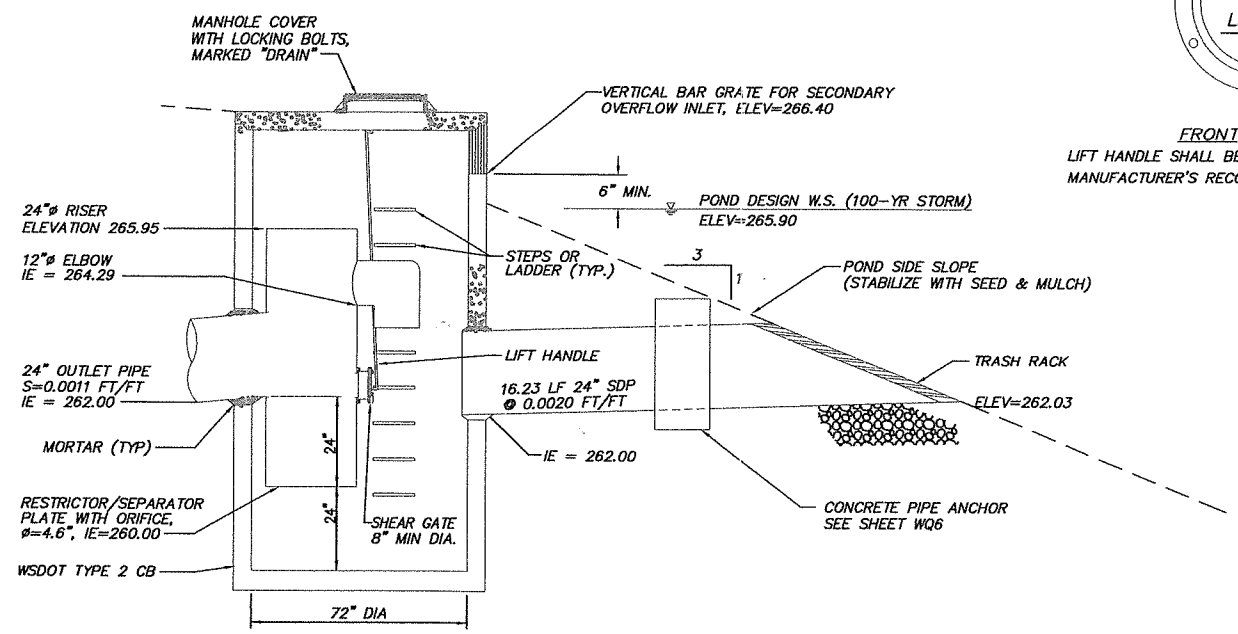

SECTION A-A

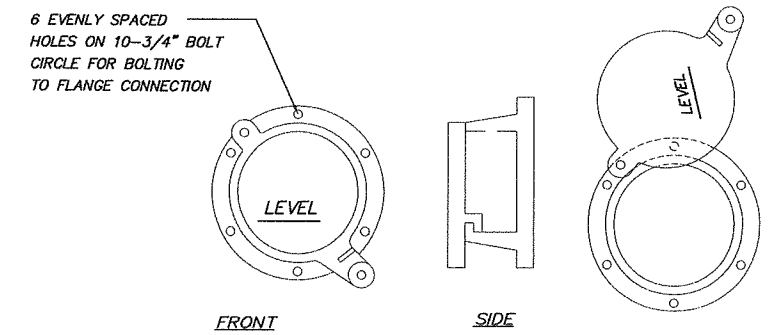

FRONT
LIFT HANDLE SHALL BE ATTACHED PER MANUFACTURER'S RECOMMENDATIONS

SIDE

MAXIMUM OPENING OF GATE

CLEANOUT/SHEAR GATE
N.T.S.

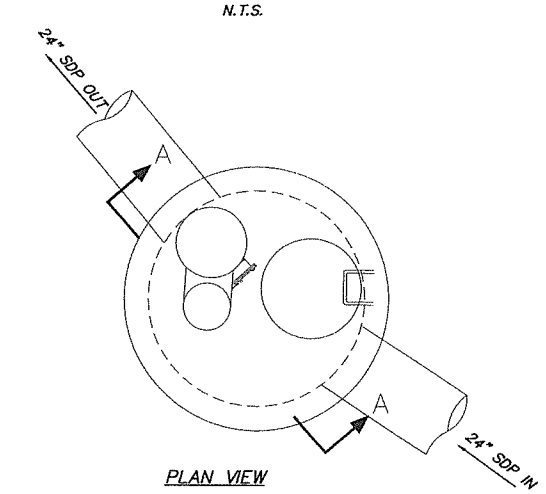

PLAN VIEW

OUTLET CONTROL MANHOLE
NTS

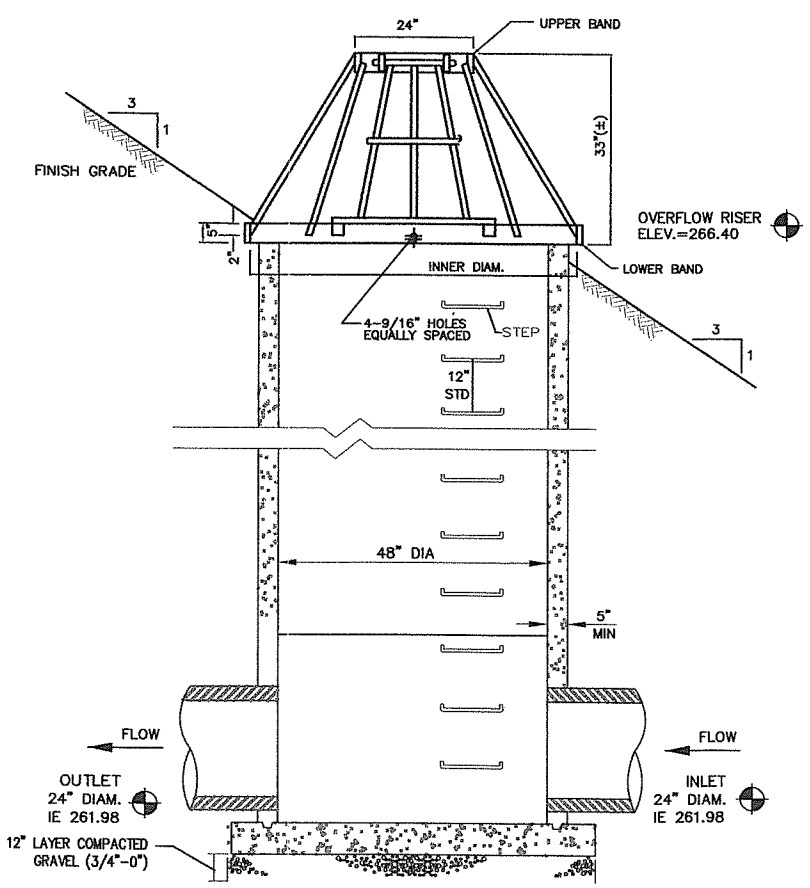

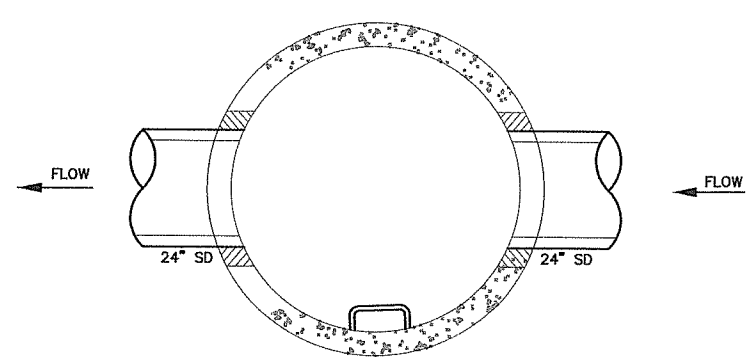

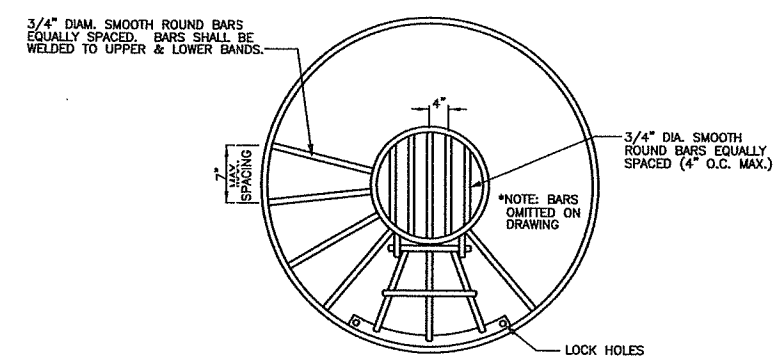

PLAN

MH	INNER DIAM.
48"	58"
54"	65"
60"	72"
72"	86"
96"	114"

NOTES:

1. ALL STEEL IN PLATES, BARS AND BANDS SHALL CONFORM TO THE REQUIREMENTS OF ASTM A36.
2. STEEL DEBRIS CAGE SHALL BE HOT-DIP GALVANIZED IN ACCORDANCE WITH ASTM A123 (AASHTO M111).
3. ALUMINUM IS AN OPTIONAL CAGE MATERIAL.

DEBRIS CAGE DETAIL

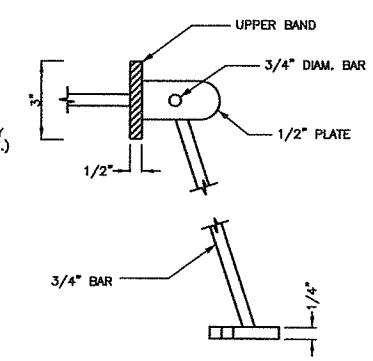

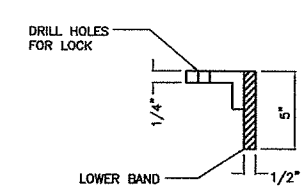

ENTRY GATE DETAIL

EMERGENCY OVERFLOW MANHOLE
NTS

NOT FOR CONSTRUCTION

DESIGNED:	SC
DRAWN:	BDS
CRP:	330422
HORIZ.	1" = 20'
VERT.	NA
DATE:	8/27/2004
DWG:	SWF-3
SHEET	24 OF 81

CALL 48 HOURS BEFORE YOU DIG 1-800-424-5555 "It's the Law" NORTHWEST UTILITIES NOTIFICATION CENTER

PANELA R. EL WERDEMANN STATE OF WASHINGTON 22340 REGISTERED PROFESSIONAL ENGINEER EXPIRES 2005-31-2005

otak Incorporated
700 Washington St. Suite 401
Vancouver, WA. 98660
Phone: (360) 737-8613
FAX: (360) 737-9651

DESIGN & ENGINEERING DIVISION
NE 63RD STREET IMPROVEMENTS

STORMWATER FACILITY
CONTROL STRUCTURE DETAILS

proud past, promising future
CLARK COUNTY WASHINGTON

V: SHERYL 08/24/04 6:37pm --> V:\PROJECT\11900\11944\DWG\C944S022.DWG

XREF LIST
Ltscale: 1
Resolved
C944x001_border
C944x500
C944x510
C944x600
L944x701
PKW WASH
S944b101
S944b106
S944B200
Unresolved
Lasketch-2
S944b104-

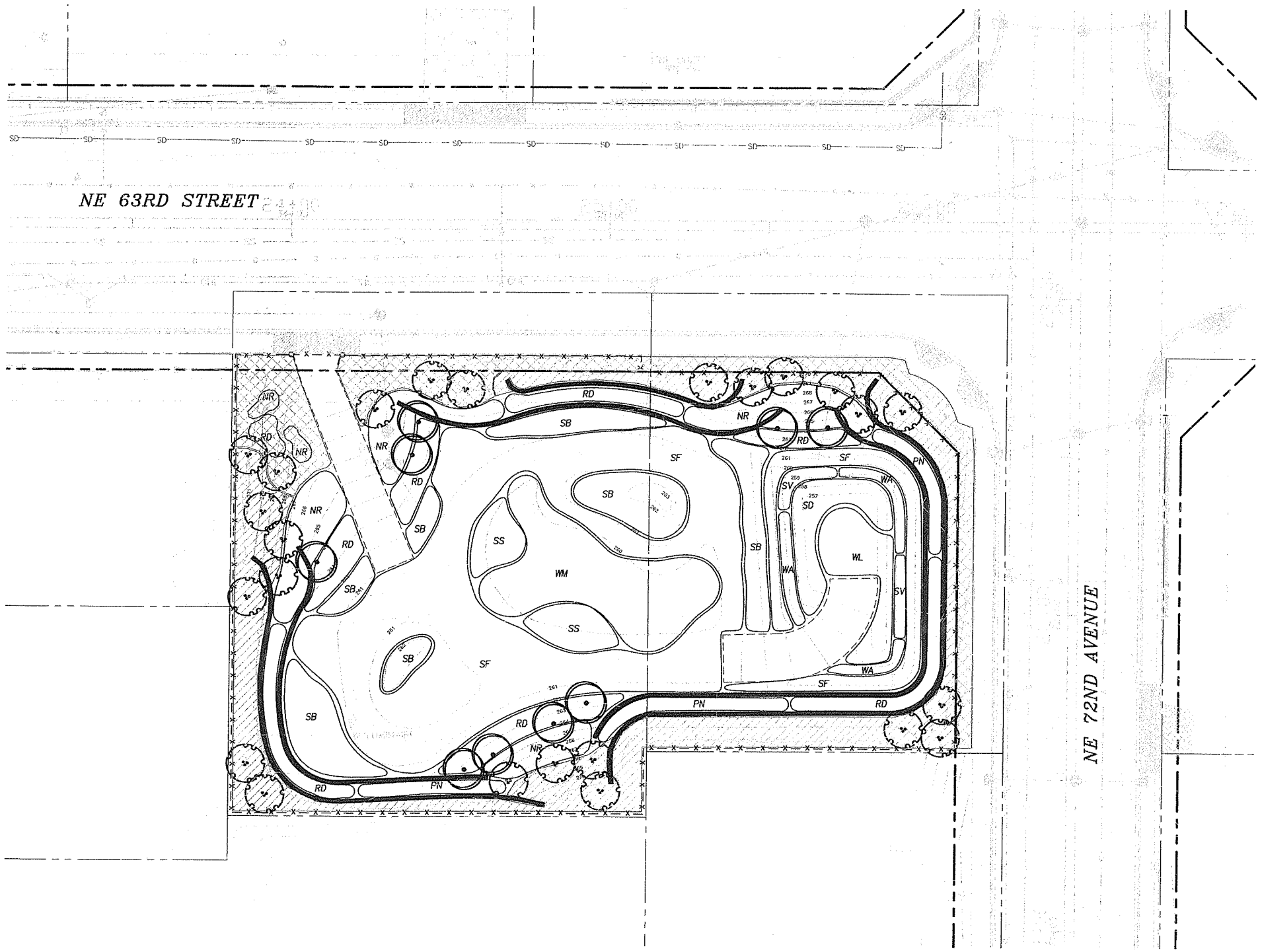

WETPOND PLANT LIST

CODE/ SYMBOL	COMMON NAME Botanical name	SIZE / SPACING REMARKS
	WESTERN SERVICEBERRY *Amelanchier alnifolia*	5 FT. HT., B&B
	CASCARA *Rhamnus purshiana*	5 FT. HT., B&B
NR	NOOTKA ROSE *Rosa nutkana*	2 GAL., 3 FT. O.C.
PN	PACIFIC NINEBARK *Physocarpus capitatus*	2 GAL., 3 FT. O.C.
RD	RED OSIER DOGWOOD *Cornus stolonifera*	2 GAL., 3 FT. O.C.
SB	SAWBEAK SEDGE *Carex stipata*	12 IN. O.C.
SD	SPATTERDOCK *Nuphar polysepalum*	12 IN. O.C.
SF	SMALL-FRUITED BULRUSH *Scirpus microcarpus*	12 IN. O.C.
SS	SLOUGH SEDGE *Carex obnupta*	12 IN. O.C.
SV	SOFTSTEM BULRUSH *Scirpus validus*	12 IN. O.C.
WA	WAPATO *Sagittaria latifolia 'Latifolia'*	12 IN. O.C.
WL	WHITE WATERLILY *Nymphaea odorata*	24 IN. O.C.
WM	WESTERN MANNAGRASS *Glyceria occidentalis*	12 IN. O.C.
	KINNIKINNICK *Arctostaphylos uva-ursi*	1 GAL., 2-1/2 FT. O.C.
	CREEPING MAHONIA *Mahonia repens*	1 GAL., 2-1/2 FT. O.C.

SCALE IN FEET
20 0 20 40

NOT FOR CONSTRUCTION

DESIGNED:	SC
DRAWN:	KW
CRP:	330422
HORIZ.	1" = 20'
VERT.	NA
DATE:	8/27/2004
DWG:	SWF4
SHEET	25 OF 81

CALL 48 HOURS BEFORE YOU DIG
1-800-424-5555
"It's the Law"
NORTHWEST UTILITIES NOTIFICATION CENTER

STATE OF WASHINGTON REGISTERED LANDSCAPE ARCHITECT
DAVID D. HAYNES
CERTIFICATE NO. 824

otak Incorporated
700 Washington St., Suite 401
Vancouver, WA 98660
Phone: (360) 737-8613
FAX: (360) 737-9651

DESIGN & ENGINEERING DIVISION
NE 63RD STREET IMPROVEMENTS

STORMWATER FACILITY
LANDSCAPE PLAN

proud past, promising future
CLARK COUNTY
WASHINGTON

V: JOHNNA 08/26/04 3:15pm ---> R:\DWG\C944S023.DWG

XREF LIST
Ltscale: 1
Resolved
C944X001_BORDER
PKW WASH

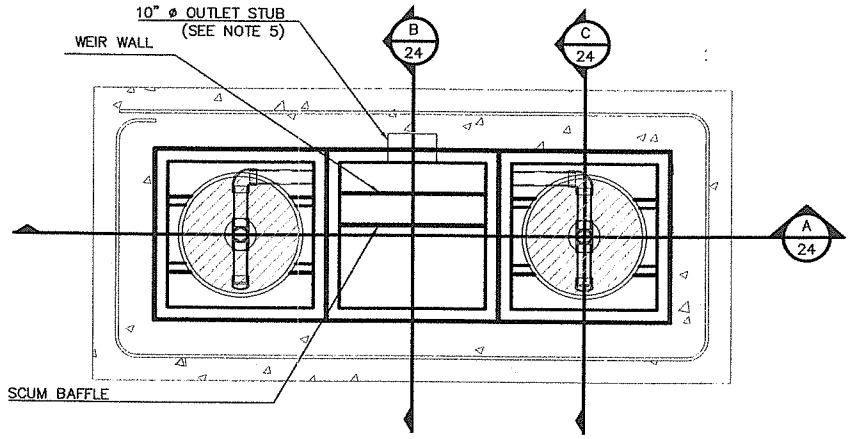

2-CART. CATCHBASIN - PLAN VIEW (1/25)
SCALE: N.T.S.

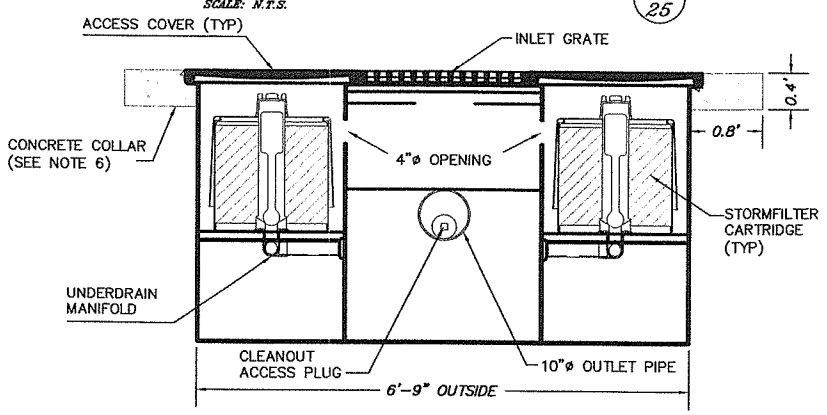

2-CART. CATCHBASIN - SECTION VIEW (A-A/25)
SCALE: N.T.S.

GENERAL NOTES

1.) STORMFILTER BY STORMWATER MANAGEMENT INC., PORTLAND, OREGON 800/548-4667.
2.) FILTERS TO BE SIPHON-ACTUATED AND SELF-CLEANING.
3.) STEEL STRUCTURE TO BE MANUFACTURED OF ¼" STEEL PLATE.
4.) STORMFILTER REQUIRES 2.3' OF DROP FROM RIM TO OUTLET. INLET (IF APPLICABLE) AND OUTLET PIPING TO BE SPECIFIED BY ENGINEER AND PROVIDED BY CONTRACTOR.
5.) CBSF EQUIPPED WITH 4" LONG STUBS FOR INLET (IF APPLICABLE) AND OUTLET PIPING. STANDARD OUTLET STUB IS 8" IN DIAMETER. CONNECTION TO COLLECTION PIPING CAN BE MADE USING FLEXIBLE COUPLING BY CONTRACTOR.
6.) FOR H-20 LOAD RATING, CONCRETE COLLAR IS REQUIRED. CONCRETE COLLAR WITH QUANTITY (2) #4 REINFORCING BARS TO BE PROVIDED BY CONTRACTOR.
7.) ALL STORMFILTERS REQUIRE REGULAR MAINTENANCE. REFER TO OPERATION AND MAINTENANCE GUIDELINES FOR DETAILS.
8.) STANDARD DETAIL SHOWS MAXIMUM NUMBER OF CARTRIDGES. EXACT NUMBER REQUIRED TO BE SPECIFIED ON SITE PLANS.

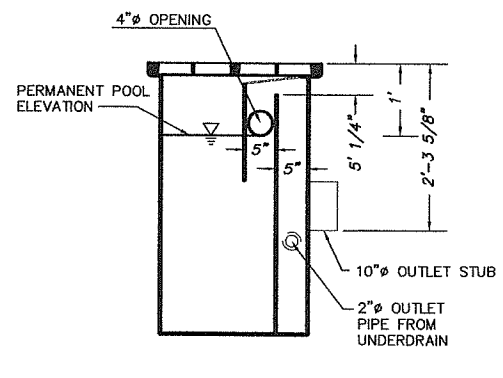

2-CART. CATCHBASIN - SECTION VIEW (B-B/25)
SCALE: N.T.S.

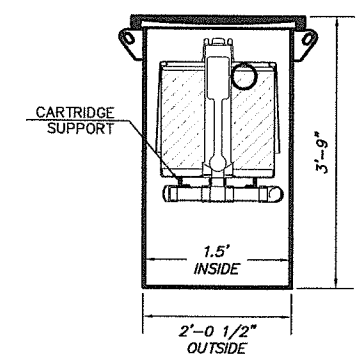

2-CART. CATCHBASIN - SECTION VIEW (C-C/25)
SCALE: N.T.S.

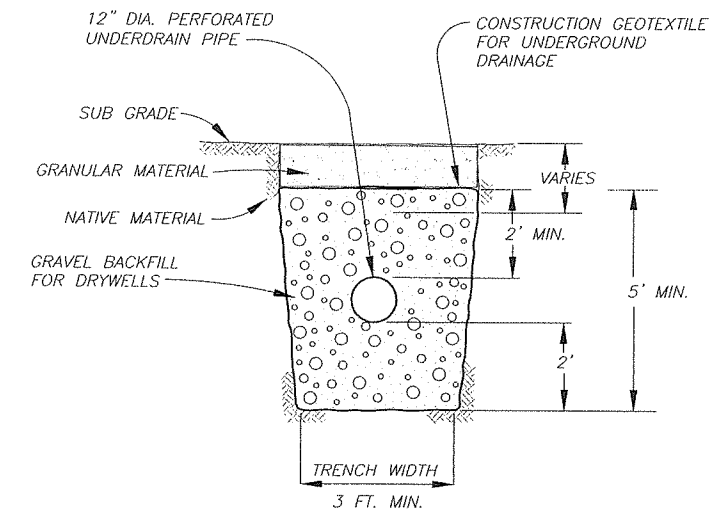

INFILTRATION TRENCH (PUBLIC)
NTS

DESIGNED:	SC
DRAWN:	KW
CRP:	330422
HORIZ.	
VERT:	NA
DATE:	8/27/2004
DWG:	SWF5
SHEET	26 OF 81

CALL 48 HOURS BEFORE YOU DIG
1-800-424-5555
"It's the Law"
NORTHWEST UTILITIES NOTIFICATION CENTER

PAUL A. TEL WEDEMANN
STATE OF WASHINGTON
REGISTERED PROFESSIONAL ENGINEER
EXPIRES AUG. 31, 2005

otak Incorporated
700 Washington St. Suite 401
Vancouver, WA 98660
Phone: (360) 737-9613
FAX: (360) 737-9651

DESIGN & ENGINEERING DIVISION
NE 63RD STREET IMPROVEMENTS

STORMWATER FACILITY
MISC. DETAILS

NOT FOR CONSTRUCTION

proud past, promising future
CLARK COUNTY
WASHINGTON

V: SHERYL 08/24/04 6:39pm --> V:\PROJECT\11900\11944\DWG\C944S025.DWG

XREF LIST
Ltscale: 10
Resolved
C944X001_BORDER
C944x500
PKW WASH
S944b104
S944b106
S944B200

NOTE: STORMFILTER CONFIGURATION SHOWN HERE FOR INNER DIMENSIONS AND PIPE CONNECTION CONFIGURATION ONLY. REFER TO MANUFACTURER FOR FOR FLOW CARTRIDGE LAYOUT, PLACEMENT, AND OUTER STRUCTURAL DIMENSIONS. A MINIMUM OF 11 CARTRIDGES SHALL BE INSTALLED FOR WATER QUALITY VAULT NO. C6 ON SHEET PP09.

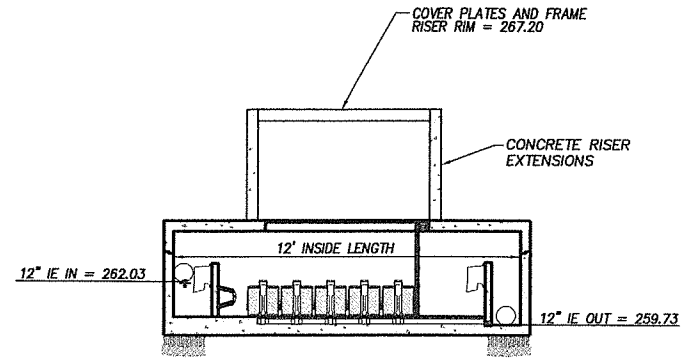

SECTION A–A
N.T.S.

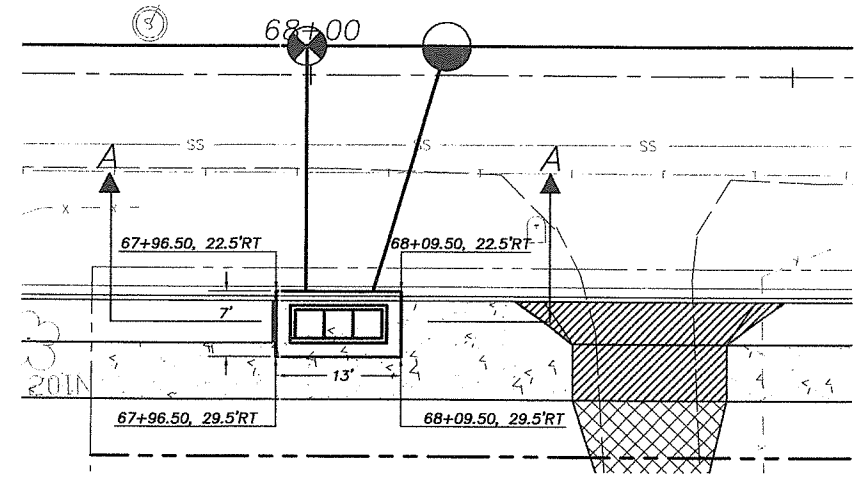

NOTE: STATION AND OFFSETS SHOWN ARE TO OUTSIDE OF VAULTS.

PLAN
ALSO SEE SHEET PP09
SCALE: 1"=10'

STORM FILTER™ WATER QUALITY VAULT NO. C6

NOTE: STORMFILTER CONFIGURATION SHOWN HERE FOR INNER DIMENSIONS AND PIPE CONNECTION CONFIGURATION ONLY. REFER TO MANUFACTURER FOR FOR FLOW CARTRIDGE LAYOUT, PLACEMENT, AND OUTER STRUCTURAL DIMENSIONS. A MINIMUM OF 6 CARTRIDGES SHALL BE INSTALLED FOR WATER QUALITY VAULT NO. E9 ON SHEET PP10.

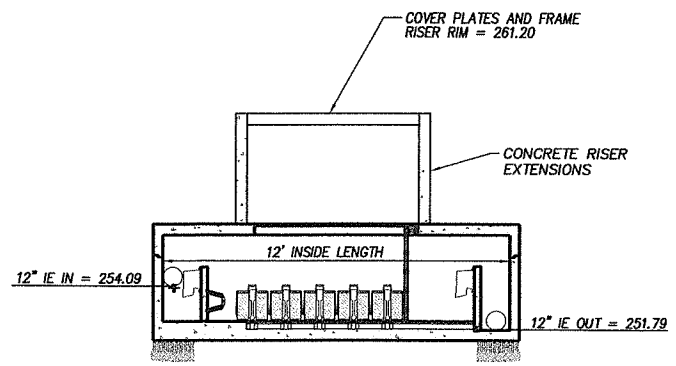

SECTION A–A
N.T.S.

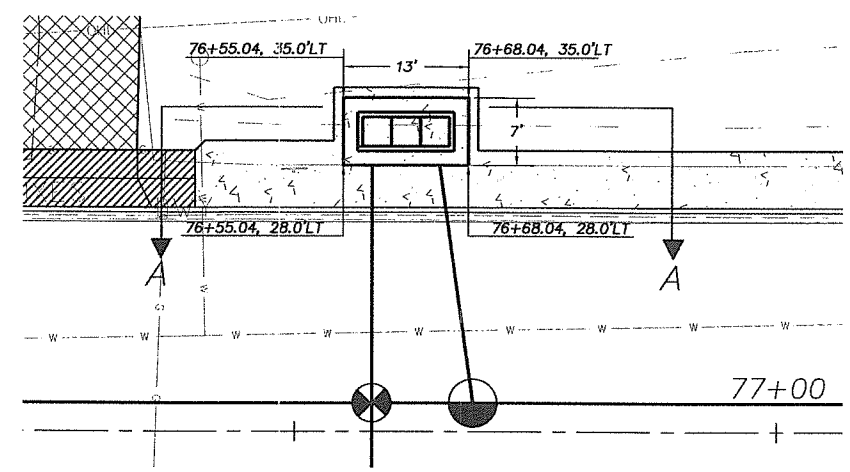

NOTE: STATION AND OFFSETS SHOWN ARE TO OUTSIDE OF VAULTS.

PLAN
ALSO SEE SHEET PP10
SCALE: 1"=10'

STORM FILTER™ WATER QUALITY VAULT NO. E9

NOTE: STORMFILTER CONFIGURATION SHOWN HERE FOR INNER DIMENSIONS AND PIPE CONNECTION CONFIGURATION ONLY. REFER TO MANUFACTURER FOR FOR FLOW CARTRIDGE LAYOUT, PLACEMENT, AND OUTER STRUCTURAL DIMENSIONS. A MINIMUM OF 9 CARTRIDGES SHALL BE INSTALLED FOR WATER QUALITY VAULT NO. E4 ON SHEET PP11.

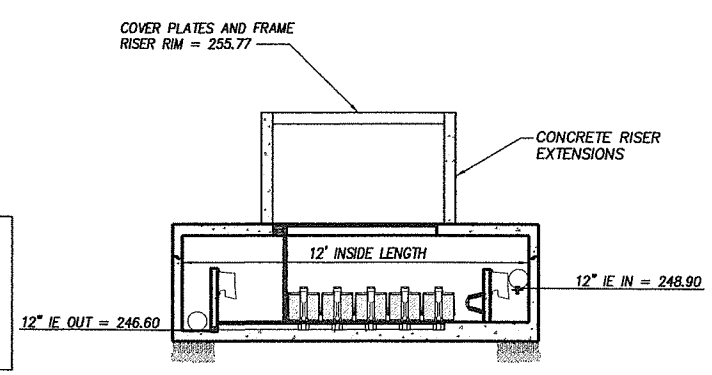

SECTION A–A
N.T.S.

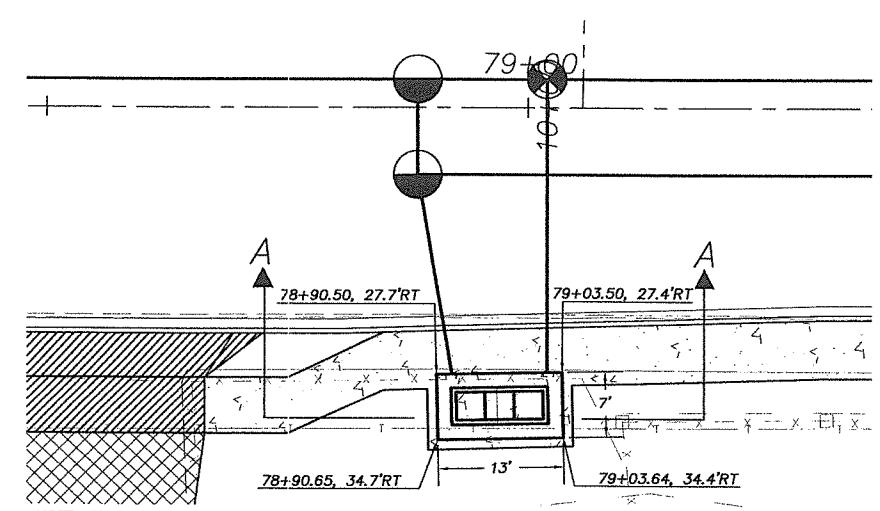

NOTE: STATION AND OFFSETS SHOWN ARE TO OUTSIDE OF VAULTS.

PLAN
ALSO SEE SHEET PP11
SCALE: 1"=10'

STORM FILTER™ WATER QUALITY VAULT NO. E4

V: JOHNMA 08/26/04 3:36pm -->R:\DWG\C944S024.DWG

NOT FOR CONSTRUCTION

DESIGNED: SC
DRAWN: KW
CRP: 330422
HORIZ. AS NOTED
VERT: NA
DATE: 8/27/2004
DWG: SWF6
SHEET 27 OF 81

CALL 48 HOURS BEFORE YOU DIG 1-800-424-5555 "It's the Law" NORTHWEST UTILITIES NOTIFICATION CENTER

PAMELA R. EL WIDEMANN STATE OF WASHINGTON REGISTERED PROFESSIONAL ENGINEER
EXPIRES:AUG. 31, 2005

otak Incorporated
700 Washington St. Suite 401
Vancouver, WA 98660
Phone: (360) 737-9613
FAX: (360) 737-9651

DESIGN & ENGINEERING DIVISION
NE 63RD STREET IMPROVEMENTS

WATER QUALITY VAULT DETAILS

proud past, promising future
CLARK COUNTY
WASHINGTON

XREF LIST
Ltscale: 1
Resolved
C944X001_BORDER
PKW WASH

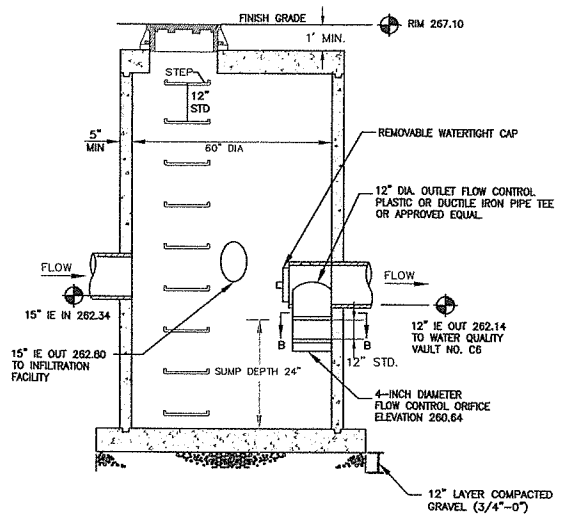

FLOW SPLITTER SDMH C5 TYPE 2 MANHOLE

NOT TO SCALE

SEE DWG PP09 FOR PLAN VIEW

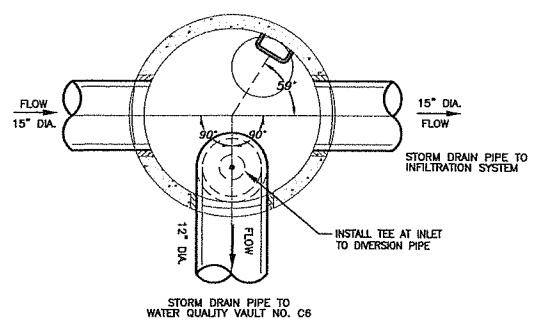

PLAN VIEW

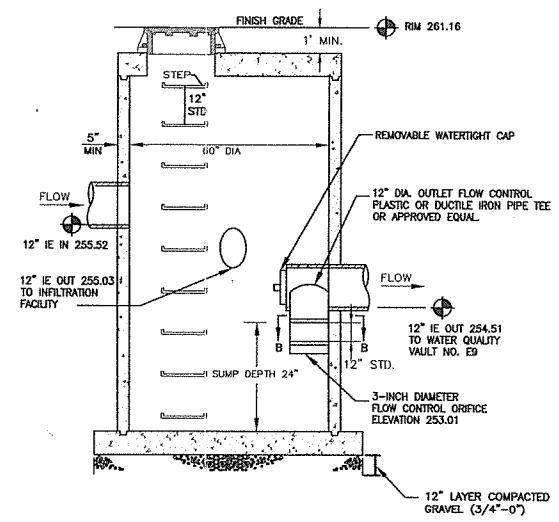

FLOW SPLITTER SDMH E10 TYPE 2 MANHOLE

NOT TO SCALE

SEE DWG PP10 FOR PLAN VIEW

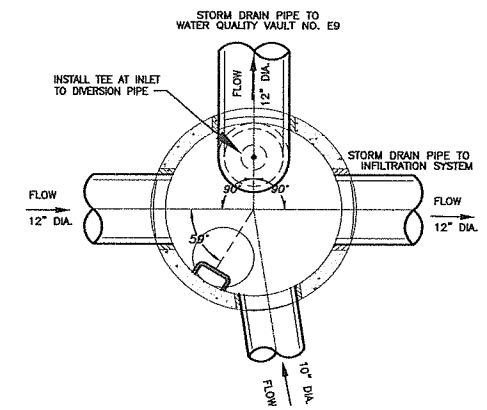

PLAN VIEW

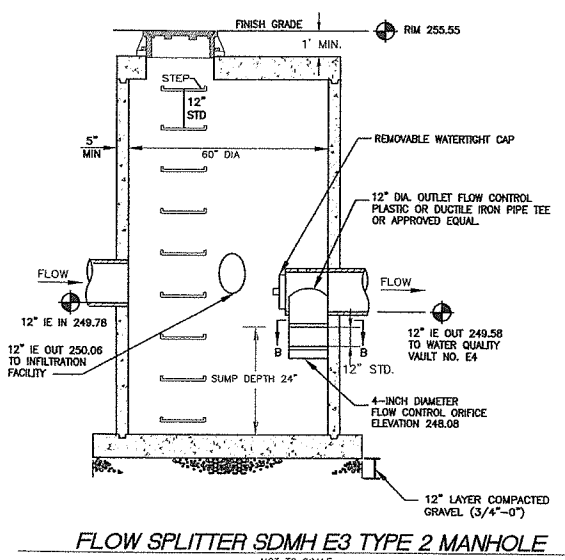

FLOW SPLITTER SDMH E3 TYPE 2 MANHOLE

NOT TO SCALE

SEE DWG PP11 FOR PLAN VIEW

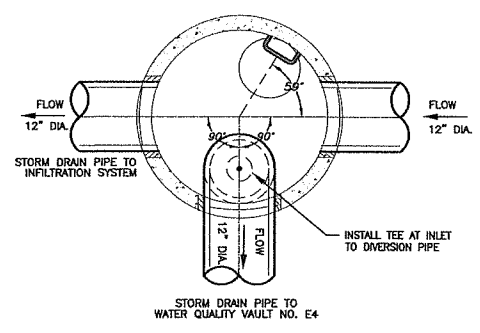

PLAN VIEW

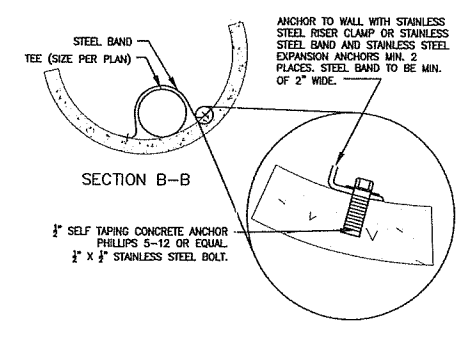

FLOW CONTROL ORIFICE SECTION B-B

NOT TO SCALE

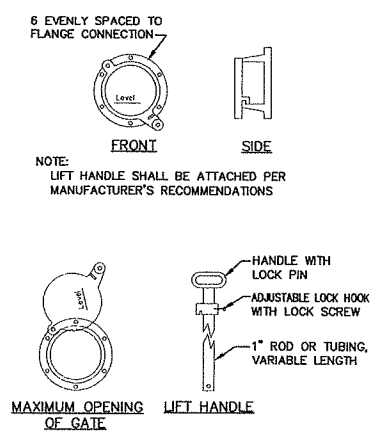

CLEANOUT/SHEAR GATE

NOT TO SCALE

ALTERNATIVES ARE ACCEPTABLE PROVIDED MATERIAL SPECIFICATIONS ARE MET AND FLANGE BOLT PATTERN MATCHES.

NOT FOR CONSTRUCTION

DESIGNED:	SC
DRAWN:	KW
CRP:	330422
HORIZ.	1" = 20'
VERT.	NA
DATE:	8/27/2004
DWG:	SWF7
SHEET	28 OF 81

CALL 48 HOURS BEFORE YOU DIG 1-800-424-5555 "It's the Law" NORTHWEST UTILITIES NOTIFICATION CENTER

PAMELA K. E. WIDEMANN STATE OF WASHINGTON 37146 REGISTERED PROFESSIONAL ENGINEER
EXPIRES AUG. 31, 2005

otak Incorporated
700 Washington St. Suite 401
Vancouver, WA 98660
Phone: (360) 737-8613
FAX: (360) 737-9651

DESIGN & ENGINEERING DIVISION
NE 63RD STREET IMPROVEMENTS

FLOW SPLITTER MANHOLE DETAILS

proud past, promising future
CLARK COUNTY WASHINGTON

V: JOHNMA 08/26/04 3:37pm ---> R:\DWG\C944S024A.DWG

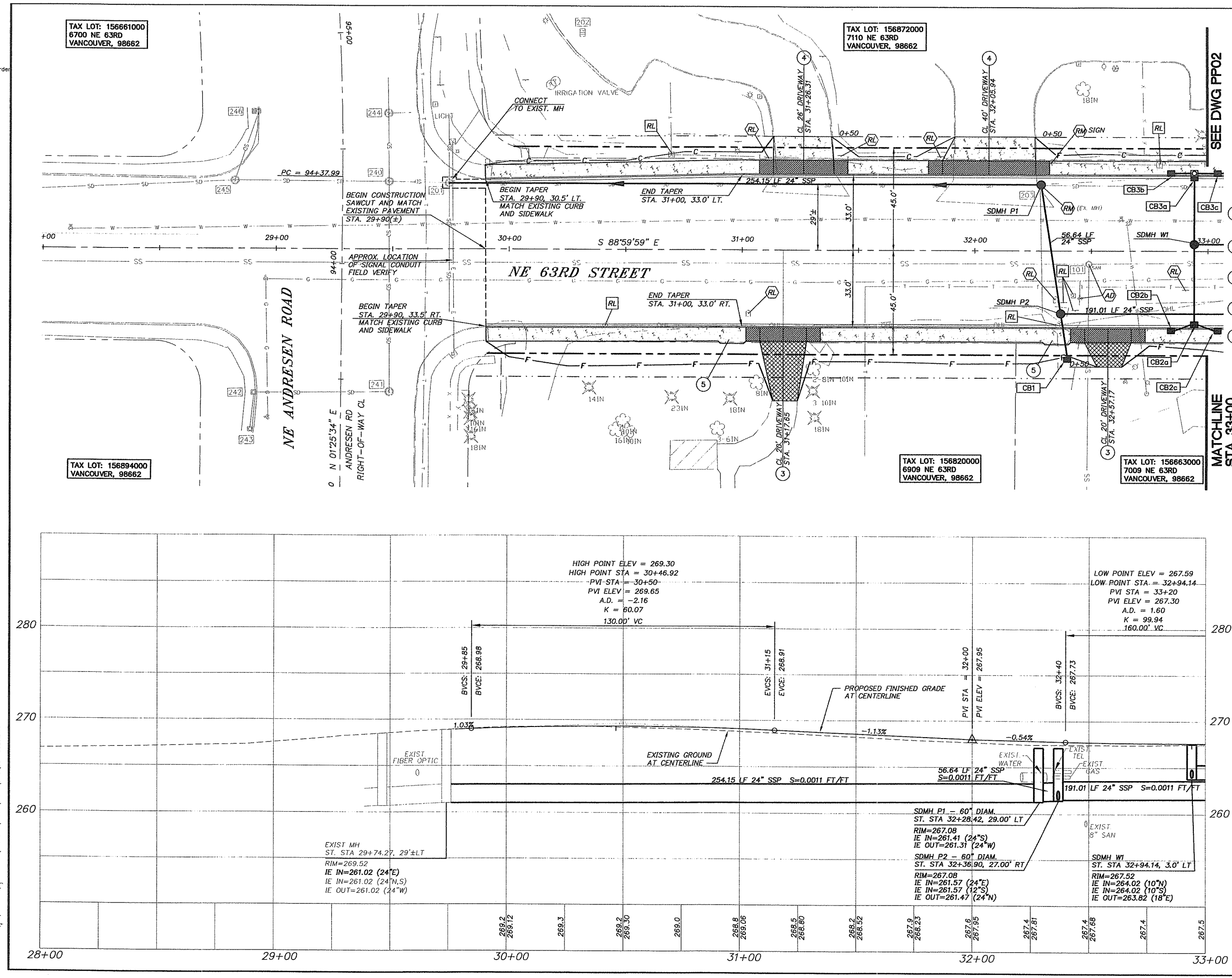

CONSTRUCTION NOTES

1. CONSTRUCT TYPE 1 CEMENT CONCRETE DRIVEWAY APPROACH PER CLARK COUNTY STD. PLAN NO. F14
2. CONSTRUCT TYPE 2 CEMENT CONCRETE DRIVEWAY APPROACH PER CLARK COUNTY STD. PLAN NO. F15
3. CONSTRUCT TYPE 3 CEMENT CONCRETE DRIVEWAY APPROACH PER CLARK COUNTY STD. PLAN NO. F16
4. CONSTRUCT 6" THICK REINFORCED CONCRETE APPROACH W/ #4 REBAR AT 6" O.C.
5. CONSTRUCT WIDEN SIDEWALK FOR MAILBOX PLACEMENT PER CLARK COUNTY STD. PLAN NO. F13.

CURB INLET INFORMATION

CB1 DITCH INLET
ST. STA. 32+39.74, 46.83' RT
RIM ELEV. = 266.0±
(FIELD VERIFY)
I.E. (OUT) = 262.55
19 LF 12" STM. PIPE
S=0.0516 FT/FT

CB2a TYPE 1 CATCH BASIN
ST. STA. 32+94.14, 33.00' RT
T.C. ELEV. = 267.27
I.E. (IN) = 264.42 (10" W,E)
I.E. (OUT) = 264.42 (10" N)
34 LF 10" DIP
S=0.0118 FT/FT

CB2b CURB INLET
ST. STA. 32+84.23, 33.00' RT
T.C. ELEV. = 267.27
I.E. (OUT) = 264.52
8 LF 10" STM. PIPE
S=0.0125 FT/FT

CB2c CURB INLET
ST. STA. 33+04.23, 33.00' RT
T.C. ELEV. = 267.27
I.E. (OUT) = 264.52
8 LF 10" STM. PIPE
S=0.0125 FT/FT

CB3a COMBINATION CURB INLET
ST. STA. 32+94.14, 33.00' LT
T.C. ELEV. = 267.27
I.E. (IN) = 264.42 (10" W,E)
I.E. (OUT) = 264.42
28 LF 10" DIP
S=0.0143 FT/FT

CB3b CURB INLET
ST. STA. 32+84.18, 33.00' LT
T.C. ELEV. = 267.27
I.E. (OUT) = 264.49
7 LF 10" STM. PIPE
S=0.0100 FT/FT

CB3c CURB INLET
ST. STA. 33+04.17, 33.00' LT
T.C. ELEV. = 267.27
I.E. (IN) = 264.49
I.E. (OUT) = 264.49
7 LF 10" STM. PIPE
S=0.0100 FT/FT

OBJECT TO BE:

REMOVED	= RM
RELOCATED	= RL
ABANDONED	= AB
REPLACED & RELOCATED	= RP
RELOCATED & ADJUSTED TO GRADE	= RA
ADJUSTED TO GRADE	= AD
TRIMMED	= T

BY: CONTRACTOR / CITY/COUNTY FORCES / OTHERS

NOT FOR CONSTRUCTION

DESIGNED:	SLW
DRAWN:	JRM
CRP:	330422
HORIZ.	1" = 20'
VERT.	1" = 5'
DATE:	8/27/2004
DWG:	PP01
SHEET	29 OF 81

CALL 48 HOURS BEFORE YOU DIG 1-800-424-5555 "It's the Law" NORTHWEST UTILITIES NOTIFICATION CENTER

PAMELA K. EL WITLOCHMANN STATE OF WASHINGTON REGISTERED PROFESSIONAL ENGINEER EXPIRES AUG. 31, 2005

otak Incorporated
700 Washington St. Suite 401
Vancouver, WA 98660
Phone: (360) 737-9613
FAX: (360) 737-9651

DESIGN & ENGINEERING DIVISION
NE 63RD STREET IMPROVEMENTS

PLAN AND PROFILE - NE 63RD STREET
STA. 28+00 TO STA. 33+00

proud past, promising future
CLARK COUNTY WASHINGTON

V: SHERYL 08/24/04 6:53pm --> V:\PROJECT\11900\11944\DWG\C9445026.DWG

:REF LIST
:scale: 20
:resolved
9444001_border
9444500
9444510
KW WASH
9445104
9445106
9448200

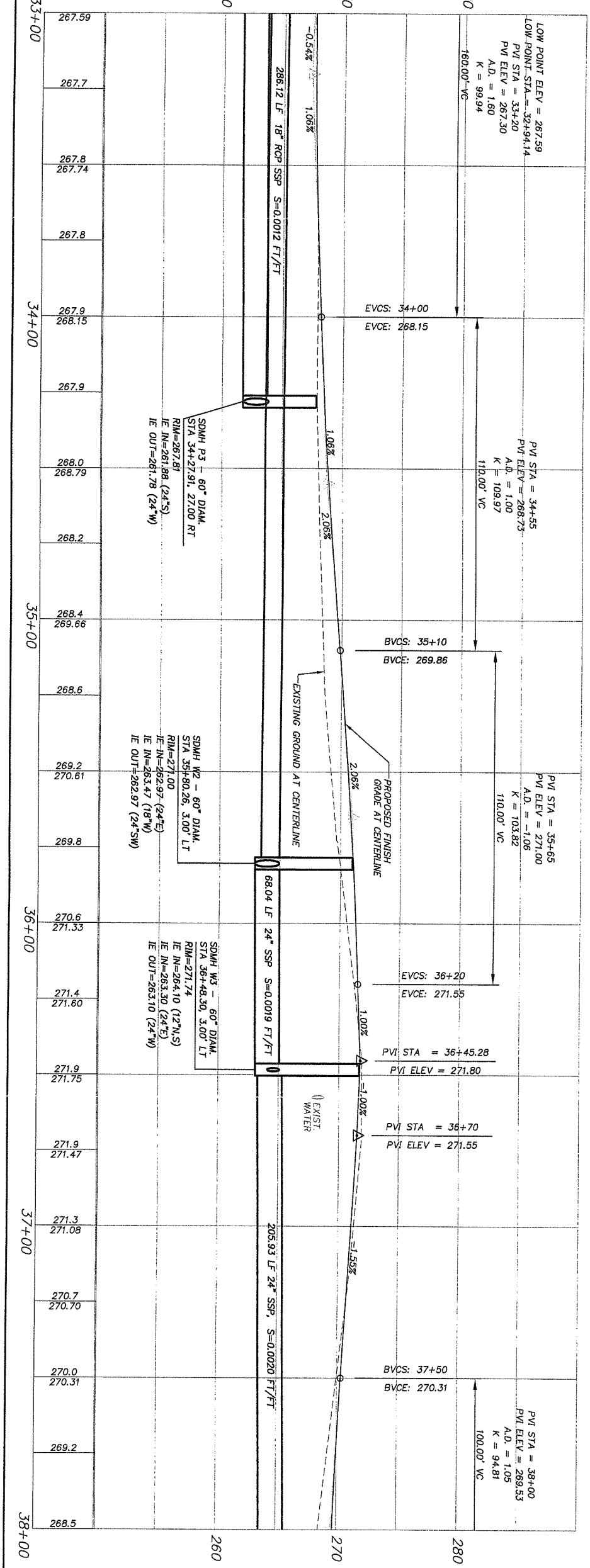

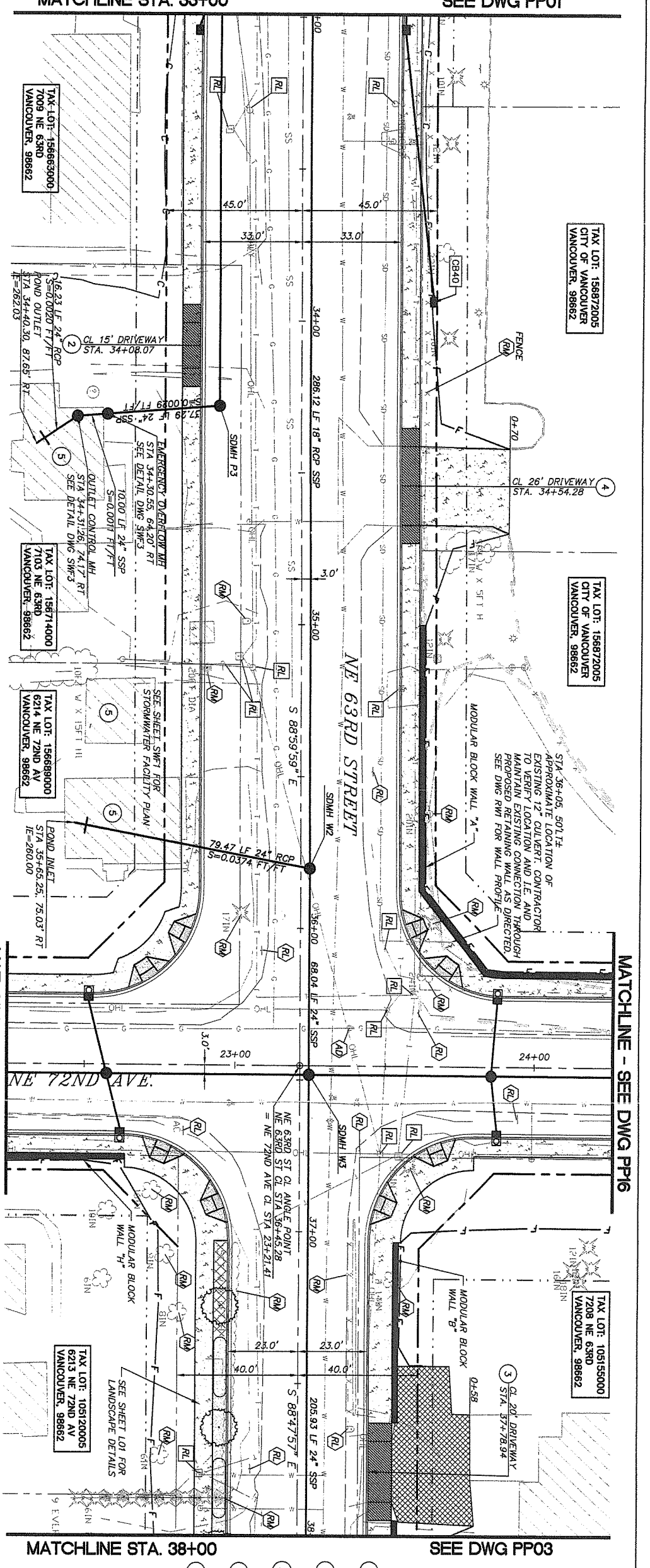

CONSTRUCTION NOTES

1. CONSTRUCT TYPE 1 CEMENT CONCRETE DRIVEWAY APPROACH PER CLARK COUNTY STD. PLAN NO. F14
2. CONSTRUCT TYPE 2 CEMENT CONCRETE DRIVEWAY APPROACH PER CLARK COUNTY STD. PLAN NO. F15
3. CONSTRUCT TYPE 3 CEMENT CONCRETE DRIVEWAY APPROACH PER CLARK COUNTY STD. PLAN NO. F16
4. CONSTRUCT 6" THICK REINFORCED CONCRETE APPROACH W/ #4 REBAR @ 6" O.C.
5. DEMOLISH AND REMOVE HOUSES AND OUT BUILDINGS. DECOMMISSION UTILITIES AS DIRECTED.

SCALE IN FEET
20 0 20 40

CURB INLET INFORMATION

SEE SHEETS PP01 AND PP15 FOR CURB INLET INFORMATION

CB40 DITCH INLET
ST. STA. 33+93.66, 43.88' LT
RIM ELEV. = 267.2±
(FIELD VERIFY)
I.E. (OUT) = 264.93
87 LF 10" STM. PIPE
S=0.0050 FT/FT

OBJECT TO BE:
REMOVED = RM
RELOCATED = RL
ABANDONED = AB
REPLACED & RELOCATED = RP
RELOCATED & ADJUSTED TO GRADE = RA
ADJUSTED TO GRADE = AD
TRIMMED = T

BY: CONTRACTOR; CITY/COUNTY FORCES; OTHERS

NOT FOR CONSTRUCTION

CLARK COUNTY WASHINGTON
proud past, promising future

DESIGN & ENGINEERING DIVISION
NE 63RD STREET IMPROVEMENTS

PLAN AND PROFILE – NE 63RD STREET
STA. 33+00 TO STA. 38+00

otak Incorporated
700 Washington St., Suite 401
Vancouver, WA 98660
Phone: (360) 737-9613
FAX: (360) 737-9651

PAMELA KIEL WIEDEMANN, STATE OF WASHINGTON, 22440, REGISTERED PROFESSIONAL ENGINEER
EXPIRES:AUG. 31, 2005

CALL 48 HOURS BEFORE YOU DIG
1-800-424-5555
"It's the Law"
NORTHWEST UTILITIES NOTIFICATION CENTER

DESIGNED:	SLW
DRAWN:	JRM
CRP:	330422
HORIZ.	1" = 20'
VERT.	1" = 5'
DATE:	8/27/2004
DWG:	PP02
SHEET	30 OF 81

&REF LIST
==========
.tscale: 20
---
resolved

3944x001_border
3944x500
3944x510
NW WASH
3944b104
3944b106
3944b200 -

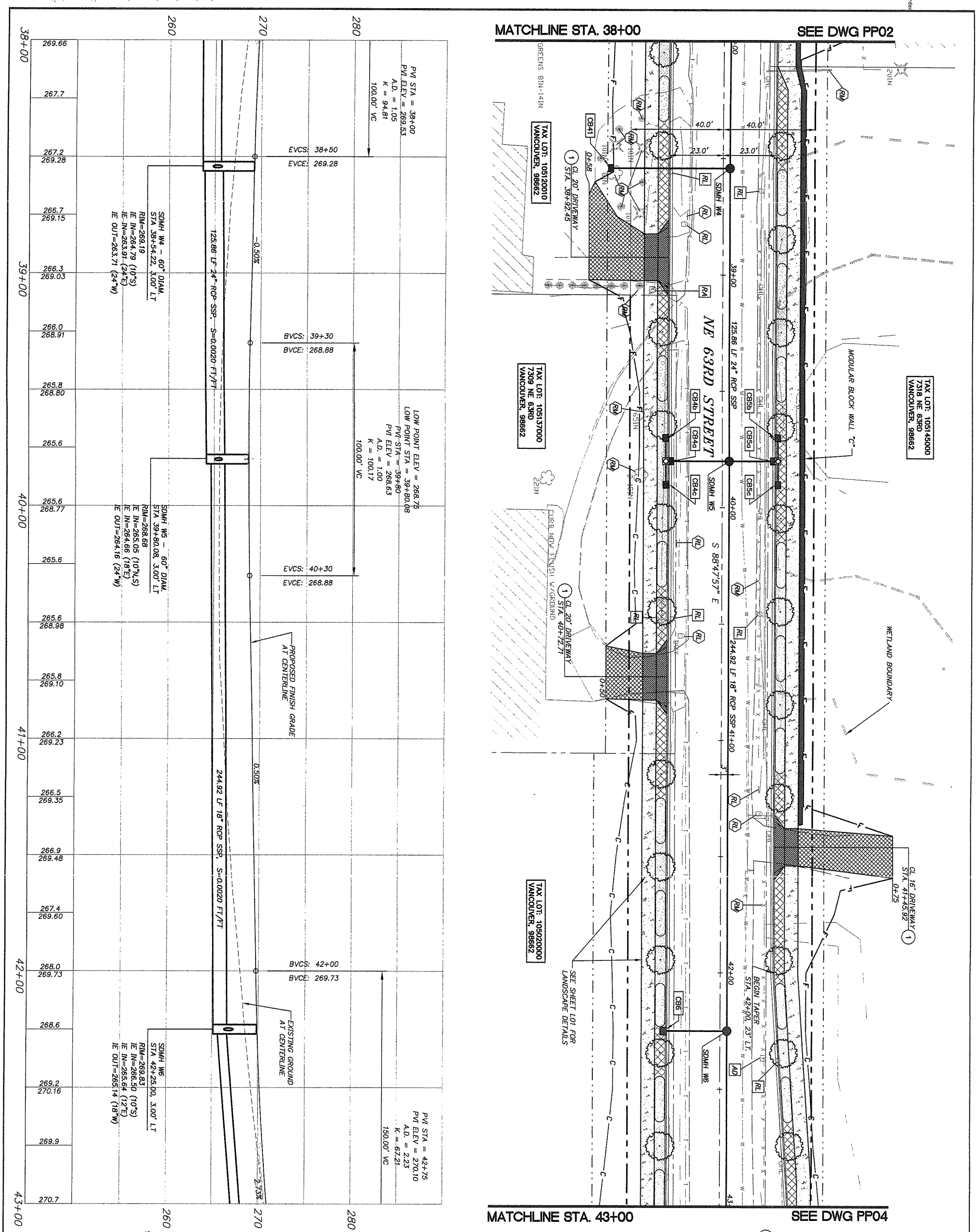

NOT FOR CONSTRUCTION

proud past, promising future

CLARK COUNTY
WASHINGTON

DESIGN & ENGINEERING DIVISION
NE 63RD STREET IMPROVEMENTS

PLAN AND PROFILE – NE 63RD STREET
STA. 38+00 TO STA. 43+00

otak Incorporated
700 Washington St., Suite 401
Vancouver, WA 98660
Phone: (360) 737-9613
FAX: (360) 737-9651

PAMELA KIEL WEDEMANN
STATE OF WASHINGTON
22440
REGISTERED PROFESSIONAL ENGINEER
EXPIRES:AUG. 31, 2005

CALL 48 HOURS BEFORE YOU DIG
1-800-424-5555
"It's the Low"
NORTHWEST UTILITIES NOTIFICATION CENTER

DESIGNED:	SLW
DRAWN:	JRM
CRP:	330422
HORIZ.	1" = 20'
VERT.	1" = 5'
DATE:	8/27/2004
DWG:	PP03
SHEET	31 OF 81

V: SHERYL 08/24/04 6:56pm --> V:\PROJECT\11900\11944\DWG\C944S029.DWG

REF LIST
iscale: 20
esolved
944x001_border
944x500
944x510
KW WASH
944b104
944b106
944B200

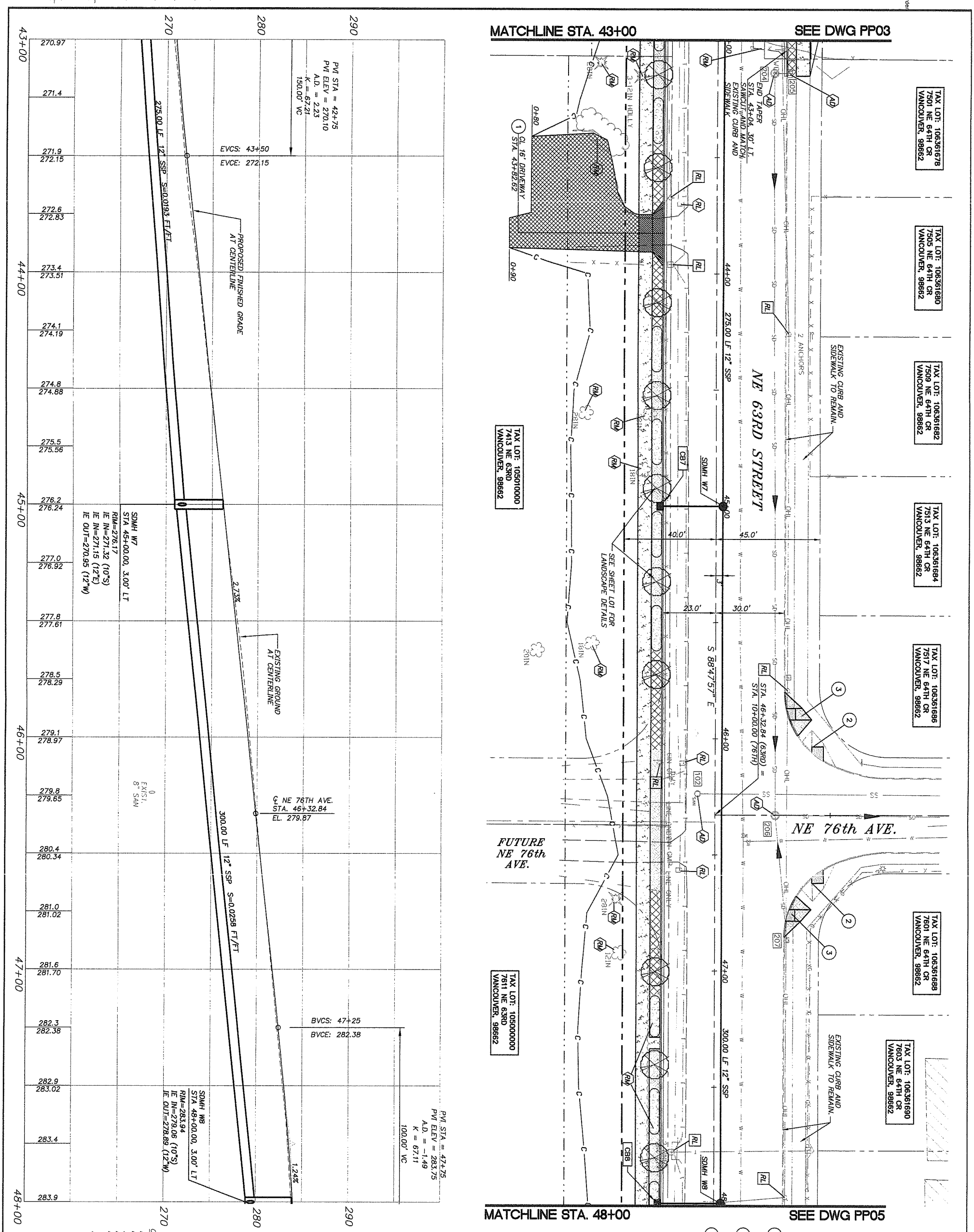

CONSTRUCTION NOTES

1. CONSTRUCT TYPE 1 CEMENT CONCRETE DRIVEWAY APPROACH PER CLARK COUNTY STD. PLAN NO. F14
2. INSTALL DETECTABLE WARNING PATTERN IN EXISTING RAMPS PER DETAILS ON SHEET D01
3. CONSTRUCT NEW TYPE A-1 CURB AND GUTTER, AND NEW SIDEWALK RAMP PER DETAILS F18 AND F1.

SCALE IN FEET: 20 0 20 40

CURB INLET INFORMATION

CB7
CURB INLET
ST. STA. 45+00.00, 23.00' RT
T.C. ELEV. = 276.17
I.E. (OUT) = 271.67
26 LF 10" STM. PIPE
S=0.0135 FT/FT

CB8
CURB INLET
ST. STA. 48+00.00, 23.00' RT
T.C. ELEV. = 283.94
I.E. (OUT) = 279.44
26 LF 10" STM. PIPE
S=0.0146 FT/FT

OBJECT TO BE:

REMOVED	= RM
RELOCATED	= RL
ABANDONED	= AB
REPLACED & RELOCATED	= RP
RELOCATED & ADJUSTED TO GRADE	= RA
ADJUSTED TO GRADE	= AD
TRIMMED	= T

BY: CONTRACTOR, CITY/COUNTY FORCES, OTHERS

NOT FOR CONSTRUCTION

proud past, promising future
CLARK COUNTY WASHINGTON

DESIGN & ENGINEERING DIVISION
NE 63RD STREET IMPROVEMENTS

PLAN AND PROFILE – NE 63RD STREET
STA. 43+00 TO STA. 48+00

otak Incorporated
700 Washington St., Suite 401
Vancouver, WA 98660
Phone: (360) 737-9613
FAX: (360) 737-9651

PAMELA KIEL WIEDEMANN, STATE OF WASHINGTON, 22440, REGISTERED PROFESSIONAL ENGINEER
EXPIRES: AUG. 31, 2005

CALL 48 HOURS BEFORE YOU DIG
1-800-424-5555
"It's the Law"
NORTHWEST UTILITIES NOTIFICATION CENTER

DESIGNED:	SLW
DRAWN:	JRM
CRP:	330422
HORIZ.	1" = 20'
VERT.	1" = 5'
DATE:	8/27/2004
DWG:	PP04
SHEET	32 OF 81

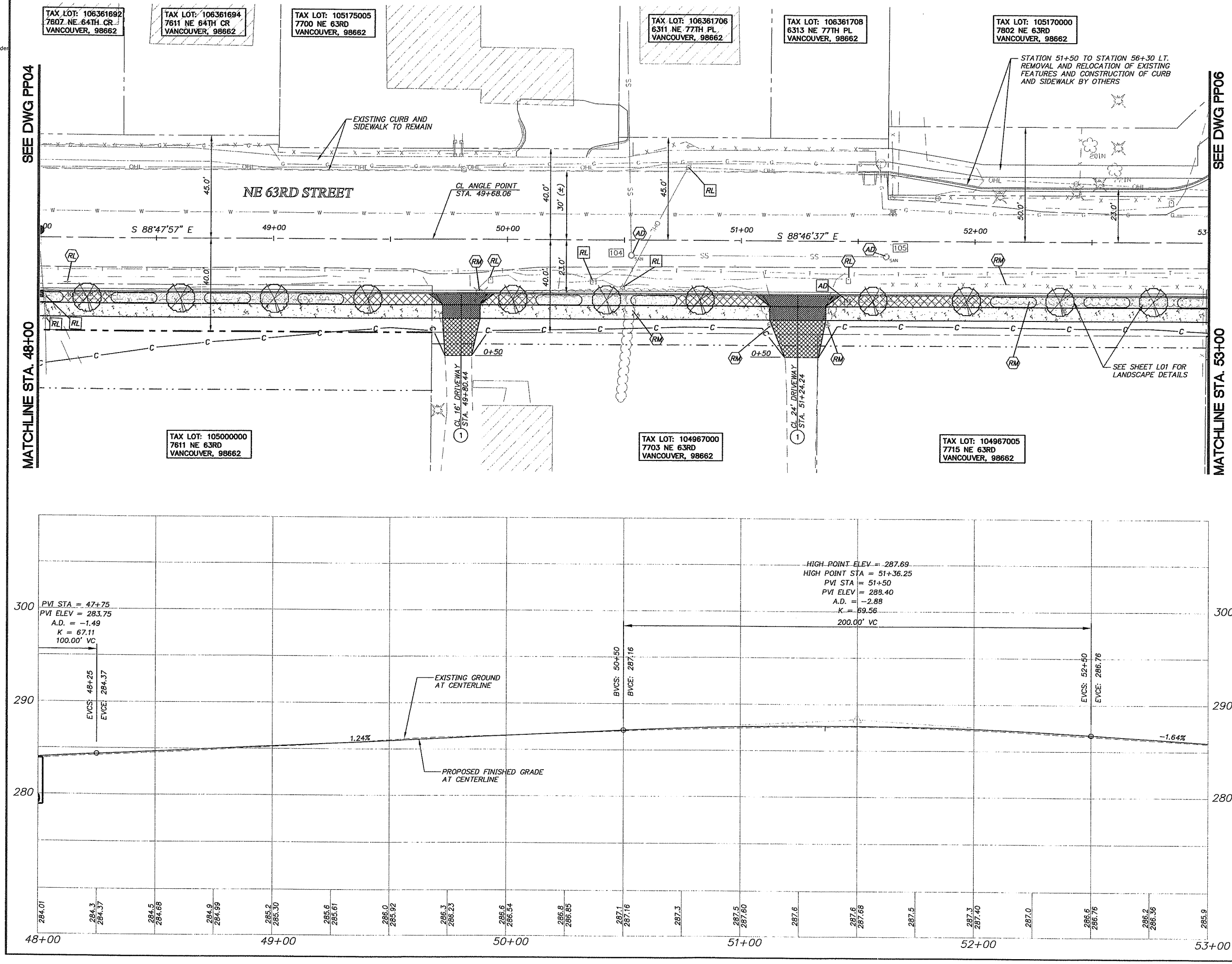

SCALE IN FEET

20 0 20 40

CONSTRUCTION NOTES

1. CONSTRUCT TYPE 1 CEMENT CONCRETE DRIVEWAY APPROACH PER CLARK COUNTY STD. PLAN NO. F14

OBJECT TO BE:

REMOVED	= RM
RELOCATED	= RL
ABANDONED	= AB
REPLACED & RELOCATED	= RP
RELOCATED & ADJUSTED TO GRADE	= RA
ADJUSTED TO GRADE	= AD
TRIMMED	= T

BY: CONTRACTOR / CITY/COUNTY FORCES / OTHERS

NOT FOR CONSTRUCTION

DESIGN & ENGINEERING DIVISION
NE 63RD STREET IMPROVEMENTS

PLAN AND PROFILE - NE 63RD STREET
STA. 48+00 TO STA. 53+00

CLARK COUNTY WASHINGTON
proud past, promising future

otak Incorporated
700 Washington St. Suite 401
Vancouver, WA 98660
Phone: (360) 737-8610
FAX: (360) 737-9651

DESIGNED:	SLW
DRAWN:	JRM
CRP:	330422
HORIZ.	1" = 20'
VERT.	1" = 5'
DATE:	8/27/2004
DWG:	PP05
SHEET	33 OF 81

CALL 48 HOURS BEFORE YOU DIG 1-800-424-5555 "It's the Law" NORTHWEST UTILITIES NOTIFICATION CENTER

PAMELA A. WEIDEMANN STATE OF WASHINGTON 22448 REGISTERED PROFESSIONAL ENGINEER EXPIRES:8/05 31, 2005

REF LIST
tscale: 20
resolved
c944x001_border
c944x500
c944x510
KW WASH
c944b104
c944b106
c944b200
V: GRANTE 01/26/04 4:59pm ---> R:\DWG\C9445023.DWG

V: SHERYL 08/24/04 6:58pm --> V:\PROJECT\11900\11944\DWG\C944S031.DWG

REF LIST
tscale: 20
resolved
944x001_border
944x500
944x510
KW WASH
944b104
944b106
944B200

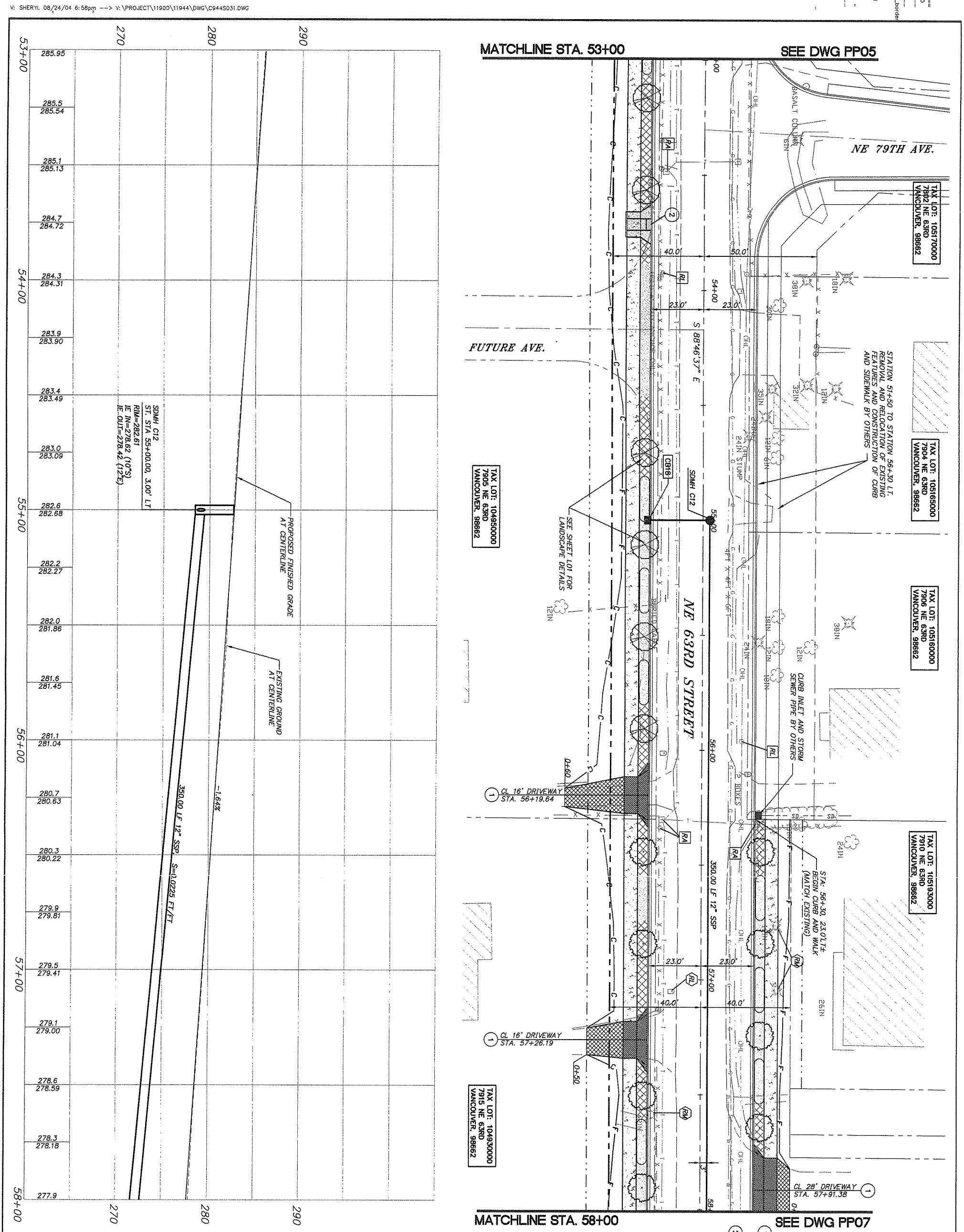

CONSTRUCTION NOTES

1. CONSTRUCT TYPE 1 CEMENT CONCRETE DRIVEWAY APPROACH PER CLARK COUNTY STD. PLAN NO. F14
2. STA 53+71.5, CONSTRUCT TYPE 4 SIDEWALK RAMP PER CLARK COUNTY STD. PLAN NO. F4

SCALE IN FEET: 20 0 20 40

CURB INLET INFORMATION

CB18 — CURB INLET
ST. STA. 55+00.00, 23.00' RT
T.C. ELEV. = 282.61
I.E. (OUT) = 278.88
26 LF 10" STM. PIPE
S=0.0100 FT/FT

OBJECT TO BE:
REMOVED = RM
RELOCATED = RL
ABANDONED = AB
REPLACED & RELOCATED = RP
RELOCATED & ADJUSTED TO GRADE = RA
ADJUSTED TO GRADE = AD
TRIMMED = T

BY: CONTRACTOR; CITY/COUNTY FORCES; OTHERS

NOT FOR CONSTRUCTION

proud past, promising future
CLARK COUNTY WASHINGTON

DESIGN & ENGINEERING DIVISION
NE 63RD STREET IMPROVEMENTS

PLAN AND PROFILE – NE 63RD STREET
STA. 53+00 TO STA. 58+00

otak Incorporated
700 Washington St., Suite 401
Vancouver, WA 98660
Phone: (360) 737-9613
FAX: (360) 737-9651

PAMELA KIEL WIEDEMANN — STATE OF WASHINGTON — 22440 — REGISTERED PROFESSIONAL ENGINEER
EXPIRES: AUG. 31, 2005

CALL 48 HOURS BEFORE YOU DIG
1-800-424-5555
"It's the Law"
NORTHWEST UTILITIES NOTIFICATION CENTER

DESIGNED:	SLW
DRAWN:	JRM
CRP:	330422
HORIZ.	1" = 20'
VERT.	1" = 5'
DATE:	8/27/2004
DWG:	PP06
SHEET	34 OF 81

REF LIST
tscale: 20
resolved
944x001_border
944x500
944x510
KW WASH
944b104
944b106
944B200

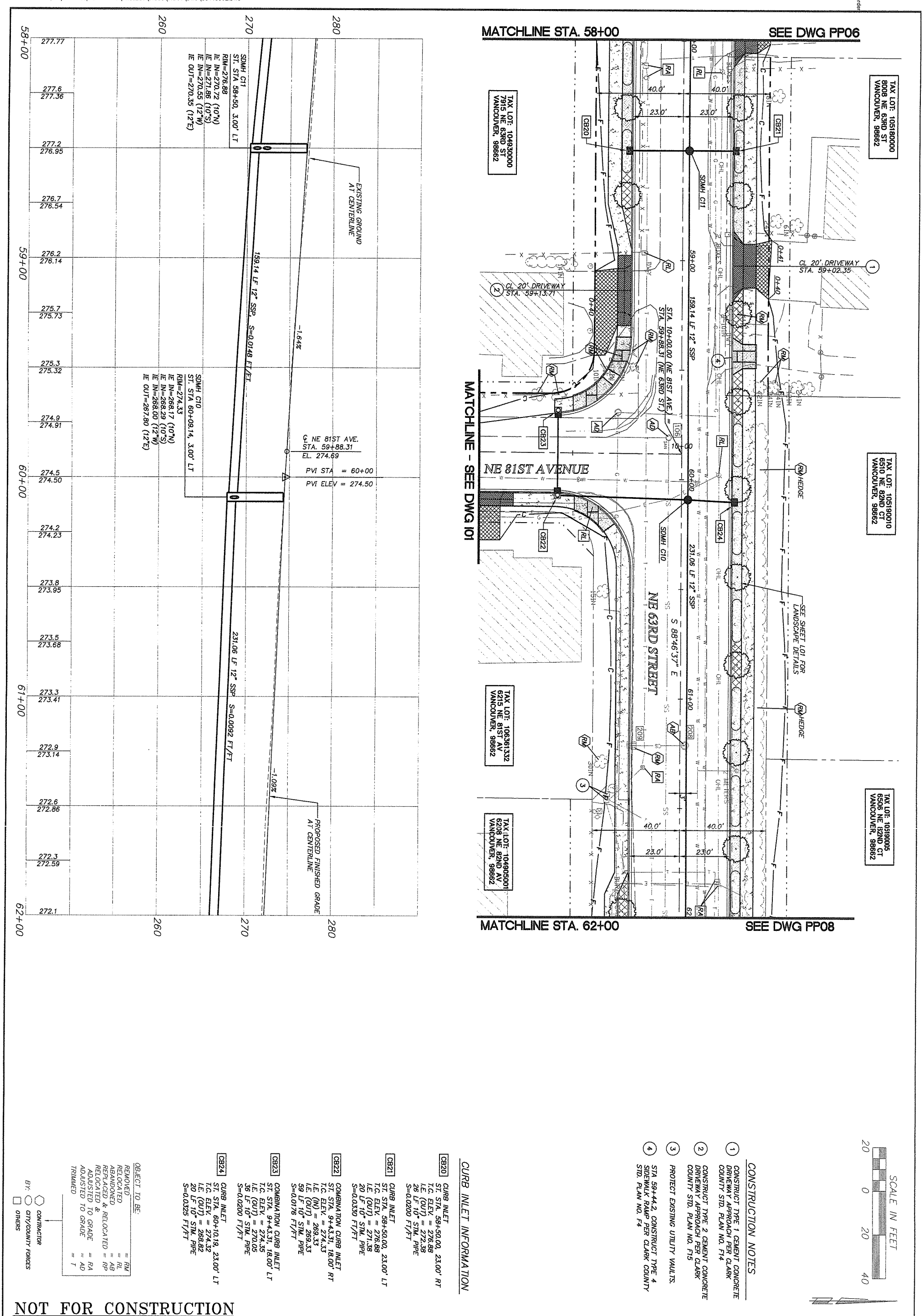

CONSTRUCTION NOTES

1. CONSTRUCT TYPE 1 CEMENT CONCRETE DRIVEWAY APPROACH PER CLARK COUNTY STD. PLAN NO. F14.
2. CONSTRUCT TYPE 2 CEMENT CONCRETE DRIVEWAY APPROACH PER CLARK COUNTY STD. PLAN NO. F15
3. PROTECT EXISTING UTILITY VAULTS.
4. STA 59+44.2, CONSTRUCT TYPE 4 SIDEWALK RAMP PER CLARK COUNTY STD. PLAN NO. F4

SCALE IN FEET
20 0 20 40

CURB INLET INFORMATION

CB20 CURB INLET
ST. STA. 58+50.00, 23.00' RT
T.C. ELEV. = 276.88
I.E. (OUT) = 272.38
26 LF 10" STM. PIPE
S=0.0200 FT/FT

CB21 CURB INLET
ST. STA. 58+50.00, 23.00' LT
T.C. ELEV. = 276.88
I.E. (OUT) = 271.38
20 LF 10" STM. PIPE
S=0.0330 FT/FT

CB22 COMBINATION CURB INLET
ST. STA. 9+43.31, 18.00' RT
T.C. ELEV. = 274.33
I.E. (IN) = 269.33
I.E. (OUT) = 269.33
59 LF 10" STM. PIPE
S=0.0176 FT/FT

CB23 COMBINATION CURB INLET
ST. STA. 9+43.31, 18.00' LT
T.C. ELEV. = 274.35
I.E. (OUT) = 270.05
36 LF 10" STM. PIPE
S=0.0200 FT/FT

CB24 CURB INLET
ST. STA. 60+10.19, 23.00' LT
T.C. ELEV. = 274.32
I.E. (OUT) = 268.82
20 LF 10" STM. PIPE
S=0.0325 FT/FT

OBJECT TO BE:
REMOVED = RM
RELOCATED = RL
ABANDONED = AB
REPLACED & RELOCATED = RP
RELOCATED & ADJUSTED TO GRADE = RA
ADJUSTED TO GRADE = AD
TRIMMED = T

BY: CONTRACTOR, CITY/COUNTY FORCES, OTHERS

NOT FOR CONSTRUCTION

proud past, promising future
CLARK COUNTY WASHINGTON

DESIGN & ENGINEERING DIVISION
NE 63RD STREET IMPROVEMENTS

PLAN AND PROFILE – NE 63RD STREET
STA. 58+00 TO STA. 62+00

otak Incorporated
700 Washington St., Suite 401
Vancouver, WA 98660
Phone: (360) 737-9613
FAX: (360) 737-9651

PAMELA KIEL WIEDEMANN
STATE OF WASHINGTON
22440
REGISTERED PROFESSIONAL ENGINEER
EXPIRES:AUG. 31, 2005

CALL 48 HOURS BEFORE YOU DIG
1-800-424-5555
"It's the Law"
NORTHWEST UTILITIES NOTIFICATION CENTER

DESIGNED:	SLW
DRAWN:	JRM
CRP:	330422
HORIZ.	1" = 20'
VERT.	1" = 5'
DATE:	8/27/2004
DWG:	PP07
SHEET	35 OF 81

REF LIST
tscale: 20
resolved
944x001_border
944x500
944x510
KW WASH
944b104
944b106
944B200

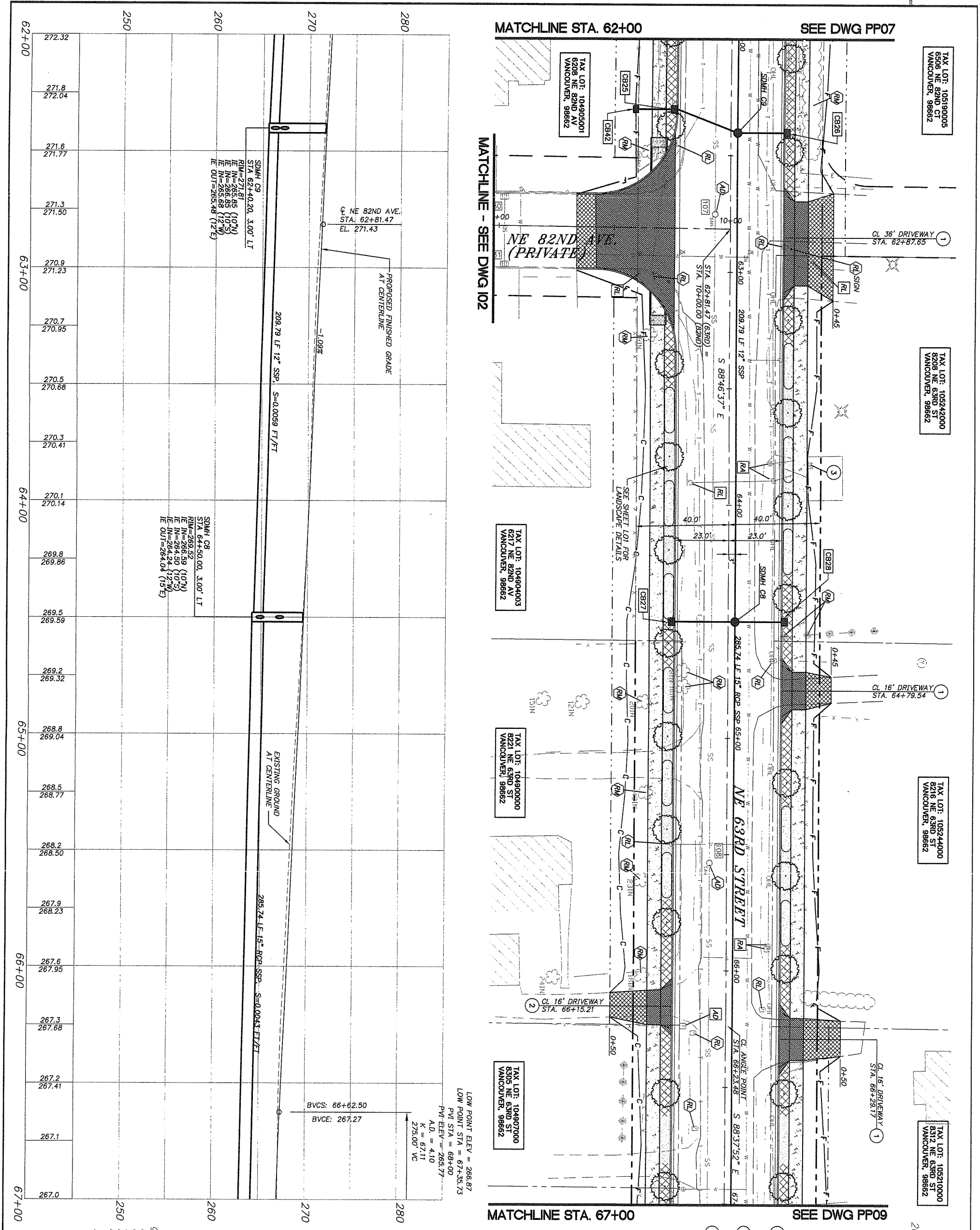

CONSTRUCTION NOTES

1. CONSTRUCT TYPE 1 CEMENT CONCRETE DRIVEWAY APPROACH PER CLARK COUNTY STD. PLAN NO. F14
2. CONSTRUCT TYPE 2 CEMENT CONCRETE DRIVEWAY APPROACH PER CLARK COUNTY STD. PLAN NO. F15
3. PROTECT EXISTING UTILITY VAULTS.

CURB INLET INFORMATION

CB25 CURB INLET
ST. STA. 62+30.18, 23.00' RT.
T.C. ELEV. = 271.92
I.E. (IN) = 267.42
I.E. (OUT) = 267.42
28 LF 10" STM. PIPE
S=0.0204 FT/FT

CB26 CURB INLET
ST. STA. 62+40.19, 23.00' LT.
T.C. ELEV. = 271.81
I.E. (OUT) = 266.31
20 LF 10" STM. PIPE
S=0.0230 FT/FT

CB27 CURB INLET
ST. STA. 64+50.00, 23.00' RT.
T.C. ELEV. = 269.52
I.E. (OUT) = 265.02
26 LF 10" STM. PIPE
S=0.0200 FT/FT

CB28 CURB INLET
ST. STA. 64+50.00, 23.00' LT.
T.C. ELEV. = 269.52
I.E. (OUT) = 266.69
20 LF 10" DIP
S=0.0050 FT/FT

CB42 DITCH INLET
ST. STA. 62+30.18, 41.12' RT.
RIM ELEV. = 270.5±
(FIELD VERIFY)
I.E. (OUT) = 267.75
14 LF 10" STM. PIPE
S=0.0236 FT/FT

OBJECT TO BE:

REMOVED	= RM
RELOCATED	= RL
ABANDONED	= AB
REPLACED & RELOCATED	= RP
RELOCATED & ADJUSTED TO GRADE	= RA
ADJUSTED TO GRADE	= AD
TRIMMED	= T

BY: ⬡ CONTRACTOR ○ CITY/COUNTY FORCES □ OTHERS

NOT FOR CONSTRUCTION

proud past, promising future
CLARK COUNTY WASHINGTON

DESIGN & ENGINEERING DIVISION
NE 63RD STREET IMPROVEMENTS

PLAN AND PROFILE – NE 63RD STREET
STA. 62+00 TO STA. 67+00

otak Incorporated
700 Washington St., Suite 401
Vancouver, WA 98660
Phone: (360) 737-9613
FAX: (360) 737-9651

PAMELA KIEL WIEDEMANN
STATE OF WASHINGTON
22440
REGISTERED PROFESSIONAL ENGINEER
EXPIRES: AUG. 31, 2005

CALL 48 HOURS BEFORE YOU DIG
1-800-424-5555
"It's the Low"
NORTHWEST UTILITIES NOTIFICATION CENTER

DESIGNED:	SLW
DRAWN:	JRM
CRP:	330422
HORIZ.	1" = 20'
VERT.	1" = 5'
DATE:	8/27/2004
DWG:	PP08
SHEET	36 OF 81

REF LIST
tscale: 20
resolved
944x001_border
944x500
944x510
KW WASH
944b104
944b106
944B200

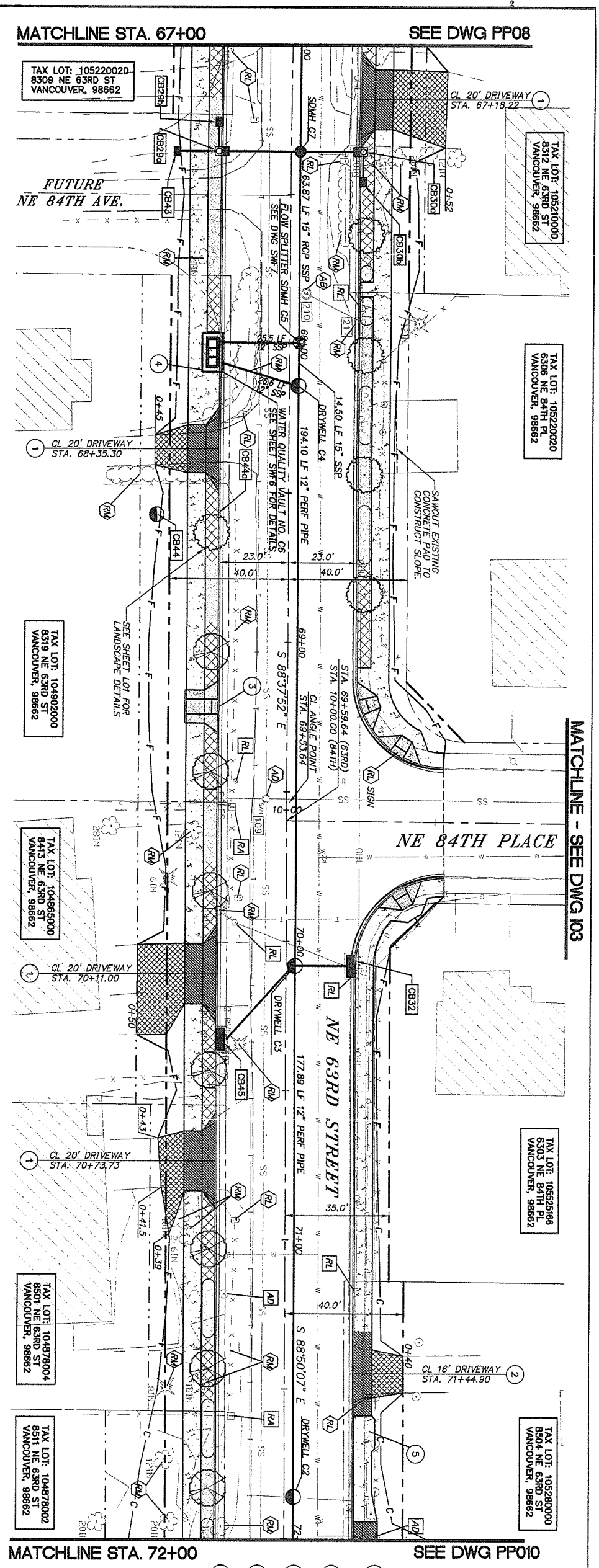

CONSTRUCTION NOTES

1. CONSTRUCT TYPE 1 CEMENT CONCRETE DRIVEWAY APPROACH PER CLARK COUNTY STD. PLAN NO. F14
2. CONSTRUCT TYPE 2 CEMENT CONCRETE DRIVEWAY APPROACH PER CLARK COUNTY STD. PLAN NO. F15
3. STA 69+21.6, CONSTRUCT TYPE 4 SIDEWALK RAMP PER CLARK COUNTY STD. PLAN NO. F4
4. CONSTRUCT 11' X 30' THICKEN SIDEWALK PAD OVER STORMWATER VAULT, PER DETAIL ON DWG D01.
5. CONSTRUCT WIDEN SIDEWALK FOR MAILBOX PLACEMENT PER CLARK COUNTY STD. PLAN NO. F13.

SCALE IN FEET: 20 0 20 40

CURB INLET INFORMATION

CB29a COMBINATION CURB INLET
ST. STA. 67+35.73, 23.00' RT.
T.C. ELEV. = 266.80
I.E. (IN) = 266.87 (10" S,E)
I.E. (OUT) = 262.87
24 LF 10" STM. PIPE
S=0.0046 FT/FT

CB29b CURB INLET
ST. STA. 67+25.80, 23.00' RT.
T.C. ELEV. = 266.81
I.E. (OUT) = 262.91
7 LF 10" STM. PIPE
S=0.0057 FT/FT

CB30a COMBINATION CURB INLET
ST. STA. 67+35.75, 23.00' LT.
T.C. ELEV. = 266.80
I.E. (IN) = 263.30
I.E. (OUT) = 263.30
18 LF 10" STM. PIPE
S=0.0078 FT/FT

CB30b CURB INLET
ST. STA. 67+45.82, 23.00' LT.
T.C. ELEV. = 266.81
I.E. (OUT) = 263.34
7 LF 10" STM. PIPE
S=0.0057 FT/FT

CB32 2 CARTRIDGE STORMFILTER CATCH BASIN SEE SHEET SWF5
ST. STA. 70+08.23, 23.01' LT.
CURB LOCATION
T.C. ELEV. = 271.95
I.E. (OUT) = 269.16
20 LF 10" STM. PIPE
S=0.1450 FT/FT

CB43 DITCH INLET
ST. STA. 67+35.77, 38.30' RT.
RIM ELEV. = 265.8±
(FIELD VERIFY)
I.E. (OUT) = 263.15
12 LF 10" STM. PIPE
S=0.0233 FT/FT

CB44 DRYWELL WITH OPEN GRATE TOP
ST. STA. 68+57.4, 45.0' RT±
RIM ELEV. = 265.9±
(FIELD VERIFY)

CB45 2 CARTRIDGE STORMFILTER CATCH BASIN SEE SHEET SWF5
ST. STA. 70+32.82, 23.00' LT.
CURB LOCATION
T.C. ELEV. = 272.62
I.E. (OUT) = 269.82
33 LF 10" STM. PIPE
S=0.0218 FT/FT

OBJECT TO BE:

REMOVED	= RM
RELOCATED	= RL
ABANDONED	= AB
REPLACED & RELOCATED	= RP
RELOCATED & ADJUSTED TO GRADE	= RA
ADJUSTED TO GRADE	= AD
TRIMMED	= T

BY: CONTRACTOR; CITY/COUNTY FORCES; OTHERS

NOT FOR CONSTRUCTION

CLARK COUNTY WASHINGTON — proud past, promising future

DESIGN & ENGINEERING DIVISION
NE 63RD STREET IMPROVEMENTS

PLAN AND PROFILE – NE 63RD STREET
STA. 67+00 TO STA. 72+00

oak Incorporated
700 Washington St., Suite 401
Vancouver, WA 98660
Phone: (360) 737-9613
FAX: (360) 737-9651

PAMELA KIEL WIEDEMANN — STATE OF WASHINGTON — 22440 — REGISTERED PROFESSIONAL ENGINEER — EXPIRES:AUG. 31, 2005

CALL 48 HOURS BEFORE YOU DIG 1-800-424-5555 "it's the Law" NORTHWEST UTILITIES NOTIFICATION CENTER

DESIGNED:	SLW
DRAWN:	JRM
CRP:	330422
HORIZ.	1" = 20'
VERT.	1" = 5'
DATE:	8/27/2004
DWG:	PP09
SHEET	37 OF 81

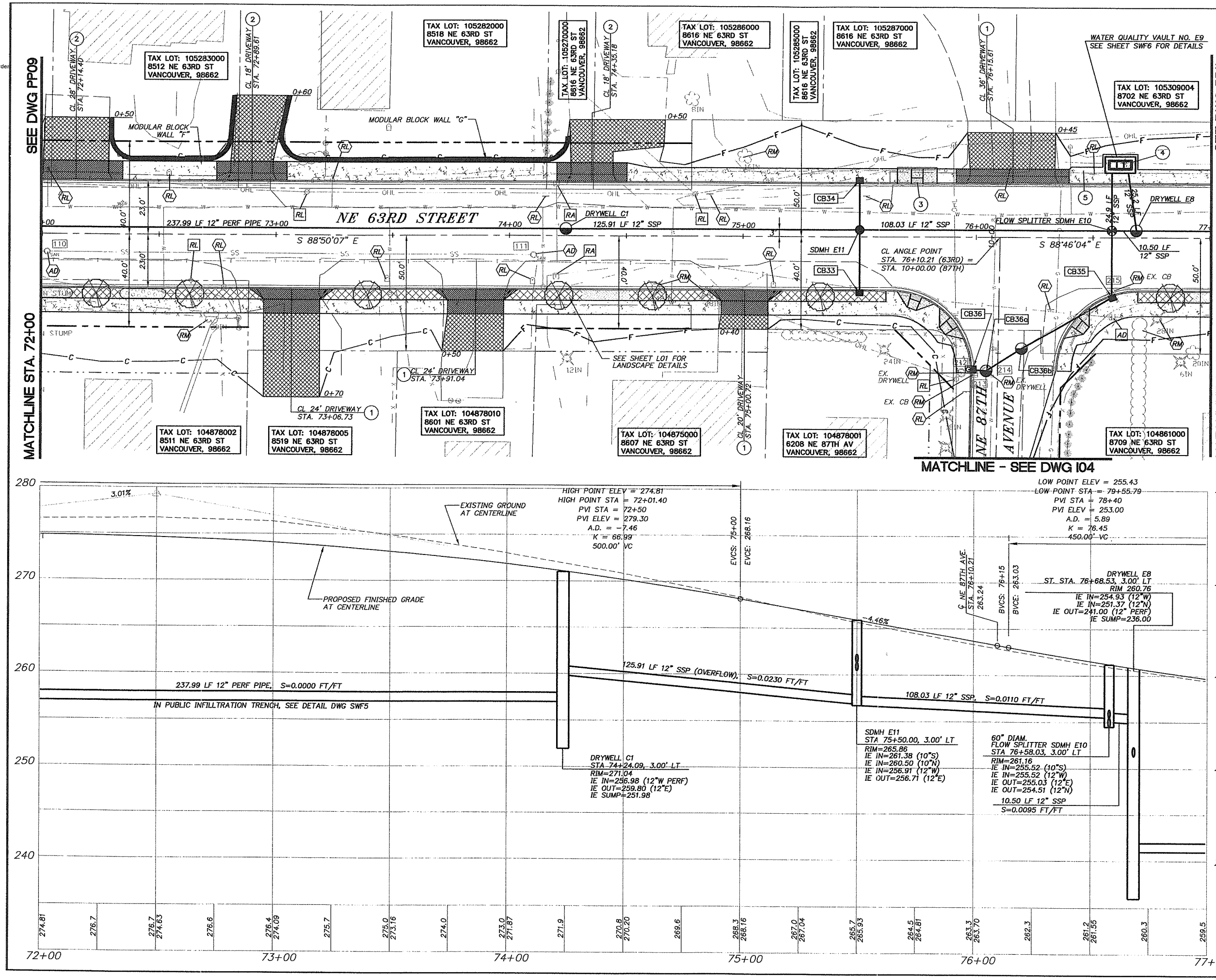

CONSTRUCTION NOTES

1. CONSTRUCT TYPE 1 CEMENT CONCRETE DRIVEWAY APPROACH PER CLARK COUNTY STD. PLAN NO. F14
2. CONSTRUCT TYPE 2 CEMENT CONCRETE DRIVEWAY APPROACH PER CLARK COUNTY STD. PLAN NO. F15
3. STA 75+74.6, CONSTRUCT TYPE 3 SIDEWALK RAMP PER CLARK COUNTY STD. PLAN NO. F3
4. CONSTRUCT 13' X 15' THICKEN SIDEWALK PAD OVER STORMWATER VAULT, PER DETAIL ON DWG D01.
5. CONSTRUCT WIDEN SIDEWALK FOR MAILBOX PLACEMENT PER CLARK COUNTY STD. PLAN NO. F13.

CURB INLET INFORMATION

CB33 CURB INLET
ST. STA.75+50.00, 23.00' RT.
T.C. ELEV. = 265.86
I.E. (OUT) = 261.86
26 LF 10" STM. PIPE
S=0.0185 FT/FT

CB34 CURB INLET
ST. STA. 75+50.00, 23.00' LT.
T.C. ELEV. = 265.86
I.E. (OUT) = 260.86
20 LF 10" STM. PIPE
S=0.0180 FT/FT

CB35 CURB INLET
ST. STA. 76.58.04, 24.84' RT.
T.C. ELEV. = 261.29
I.E. (IN) = 256.54
I.E. (OUT) = 256.04
28 LF 10" STM. PIPE
S=0.0186 FT/FT

CB36 COMBINATION CURB INLET
ST. STA. 9+42.79, 11.16' LT.
T.C. ELEV. = 262.55
I.E. (OUT) = 258.05
7 LF 10" STM. PIPE
S=0.0200 FT/FT

CB36a DRYWELL
ST. STA. 9+42.27, 5.00' LT.
RIM ELEV. = 262.12
I.E. (IN) = 257.19 (10" W)
I.E. (OUT) = 253.05 (10" NE)
I.E. (S) - FIELD VERIFY
18 LF 10" STM PIPE
S=0.0000 FT/FT
I.E. SUMP=249.65

CB36b DRYWELL
ST. STA. 9+52.15, 10.00' RT.
RIM ELEV. = 262.05
I.E. (OUT) = 256.97 (10" NE)
I.E. (IN) = 253.05 (10" SW)
43 LF 10" STM. PIPE
(EMERGENCY OVERFLOW)
S=0.0100 FT/FT
I.E. SUMP=249.65

OBJECT TO BE:

REMOVED	= RM
RELOCATED	= RL
ABANDONED	= AB
REPLACED & RELOCATED	= RP
RELOCATED & ADJUSTED TO GRADE	= RA
ADJUSTED TO GRADE	= AD
TRIMMED	= T

BY: ⬡ CONTRACTOR ◯ CITY/COUNTY FORCES ☐ OTHERS

NOT FOR CONSTRUCTION

DESIGNED:	SLW
DRAWN:	GME
CRP:	330422
HORIZ.	1" = 20'
VERT.	1" = 5'
DATE:	8/27/2004
DWG:	PP10
SHEET	38 OF 81

CALL 48 HOURS BEFORE YOU DIG 1-800-424-5555 "It's the Law" NORTHWEST UTILITIES NOTIFICATION CENTER

PAMELA E. W. ROSMANN, STATE OF WASHINGTON, 24400, REGISTERED PROFESSIONAL ENGINEER, EXPIRES AUG. 31, 2005

Incorporated
700 Washington St. Suite 401
Vancouver, WA 98660
Phone: (360) 737-8613
FAX: (360) 737-9651

DESIGN & ENGINEERING DIVISION
NE 63RD STREET IMPROVEMENTS

PLAN AND PROFILE - NE 63RD STREET
STA. 72+00 TO STA. 77+00

proud past, promising future

CLARK COUNTY WASHINGTON

REF LIST
tscale: 20
esolved
944x001_border
944x500
944x510
KW WASH
944b104
944b106
944B200

V: SHERYL 11/07/03 12:27pm --> H:\PROJECT\11900\11944\DWG\C9445028.DWG

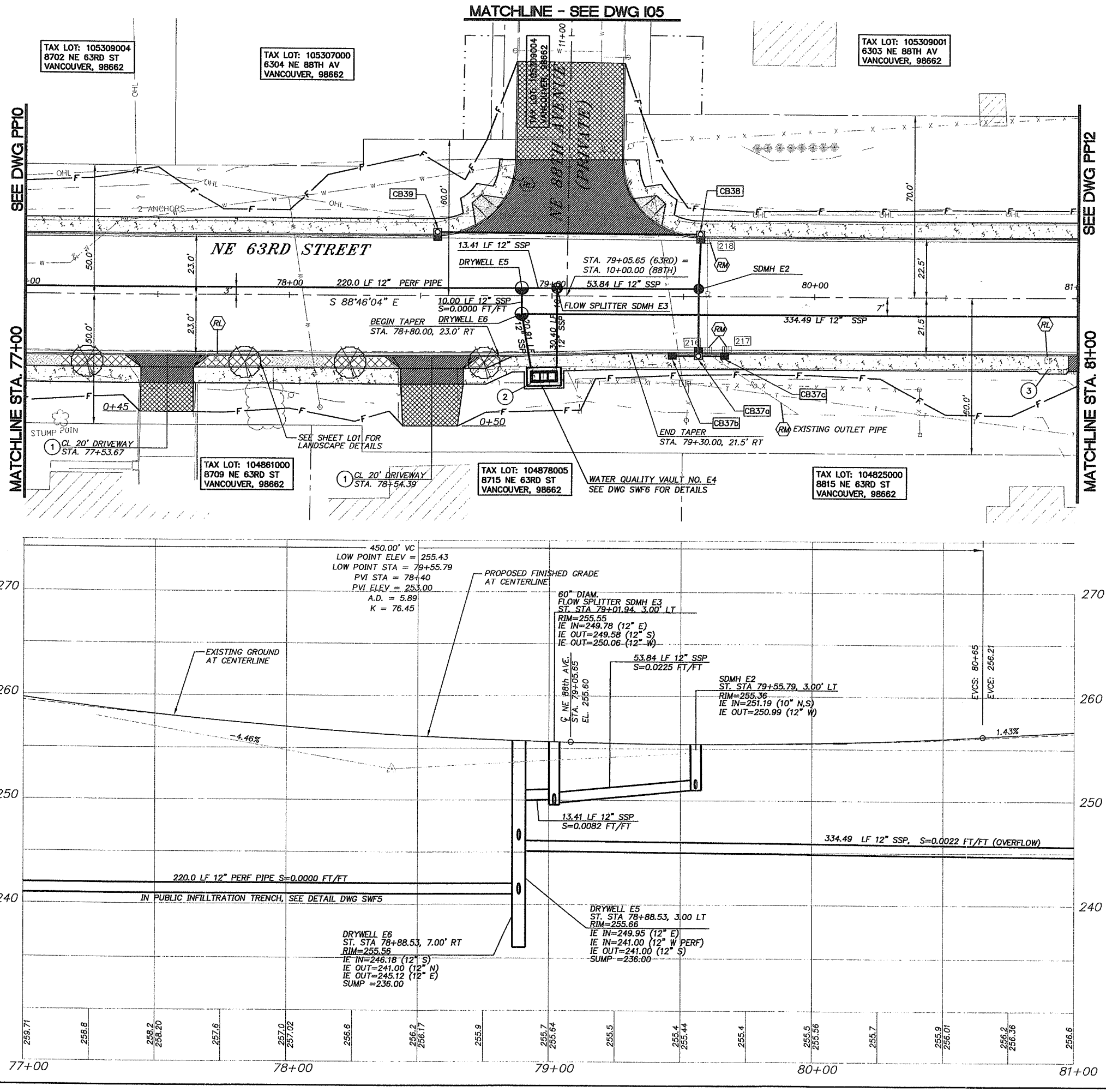

SCALE IN FEET

20 0 20 40

CONSTRUCTION NOTES

1. CONSTRUCT TYPE 1 CEMENT CONCRETE DRIVEWAY APPROACH PER CLARK COUNTY STD. PLAN NO. F14
2. CONSTRUCT 13' X 15' THICKEN SIDEWALK PAD OVER STORMWATER VAULT, PER DETAIL ON DWG D01.
3. CONSTRUCT WIDEN SIDEWALK FOR MAILBOX PLACEMENT PER CLARK COUNTY STD. PLAN NO. F13.

CURB INLET INFORMATION

CB37a COMBINATION CURB INLET
ST. STA. 79+55.79, 21.50' RT.
T.C. ELEV. = 255.38
I.E. (IN) = 251.38
I.E. (OUT) = 251.38
23 LF 10" STM. PIPE
S=0.0083 FT/FT

CB37b CURB INLET
ST. STA. 79+45.84, 21.50' RT
T.C. ELEV. = 255.40
I.E. (OUT) = 251.58
7 LF 10" STM. PIPE
S=0.0286 FT/FT

CB37c CURB INLET
ST. STA. 79+65.75, 21.50' RT.
T.C. ELEV. = 255.38
I.E. (OUT) = 251.58
7 LF 10" STM. PIPE
S=0.0286 FT/FT

CB38 COMBINATION CURB INLET
ST. STA. 79+56.49, 22.50' LT.
T.C. ELEV. = 255.37
I.E. (IN) = 251.36
I.E. (OUT) = 251.36
18 LF 10" STM. PIPE
S=0.0094 FT/FT

CB39 COMBINATION CURB INLET
ST. STA. 78+56.38, 23.00' LT.
T.C. ELEV. = 256.01
I.E. (OUT) = 252.03
97 LF 10" STM. PIPE
S=0.0069 FT/FT

OBJECT TO BE:

REMOVED	= RM
RELOCATED	= RL
ABANDONED	= AB
REPLACED & RELOCATED	= RP
RELOCATED & ADJUSTED TO GRADE	= RA
ADJUSTED TO GRADE	= AD
TRIMMED	= T

BY: ⬡ CONTRACTOR ◯ CITY/COUNTY FORCES ☐ OTHERS

NOT FOR CONSTRUCTION

DESIGNED:	SLW
DRAWN:	JRM
CRP:	330422
HORIZ.	1" = 20'
VERT.	1" = 5'
DATE:	8/27/2004
DWG:	PP11
SHEET	39 OF 81

CALL 48 HOURS BEFORE YOU DIG 1-800-424-5555 "It's the Law" NORTHWEST UTILITIES NOTIFICATION CENTER

PAMELA K. EL WITCHMANN STATE OF WASHINGTON REGISTERED PROFESSIONAL ENGINEER EXPIRES AUG. 31, 2005

dak Incorporated
700 Washington St. Suite 401
Vancouver, WA 98660
Phone: (360) 737-9813
FAX: (360) 737-9651

DESIGN & ENGINEERING DIVISION
NE 63RD STREET IMPROVEMENTS

PLAN AND PROFILE - NE 63RD STREET
STA. 77+00 TO STA. 81+00

proud past, promising future

CLARK COUNTY WASHINGTON

REF LIST
tscale: 20
tesolved
944x001_border
944x500
944x510
KW WASH
944b104
944b106
944B200

V: SHERYL 02/23/04 1:12pm --> H:\PROJECT\11900\11944\DWG\C9445029.DWG

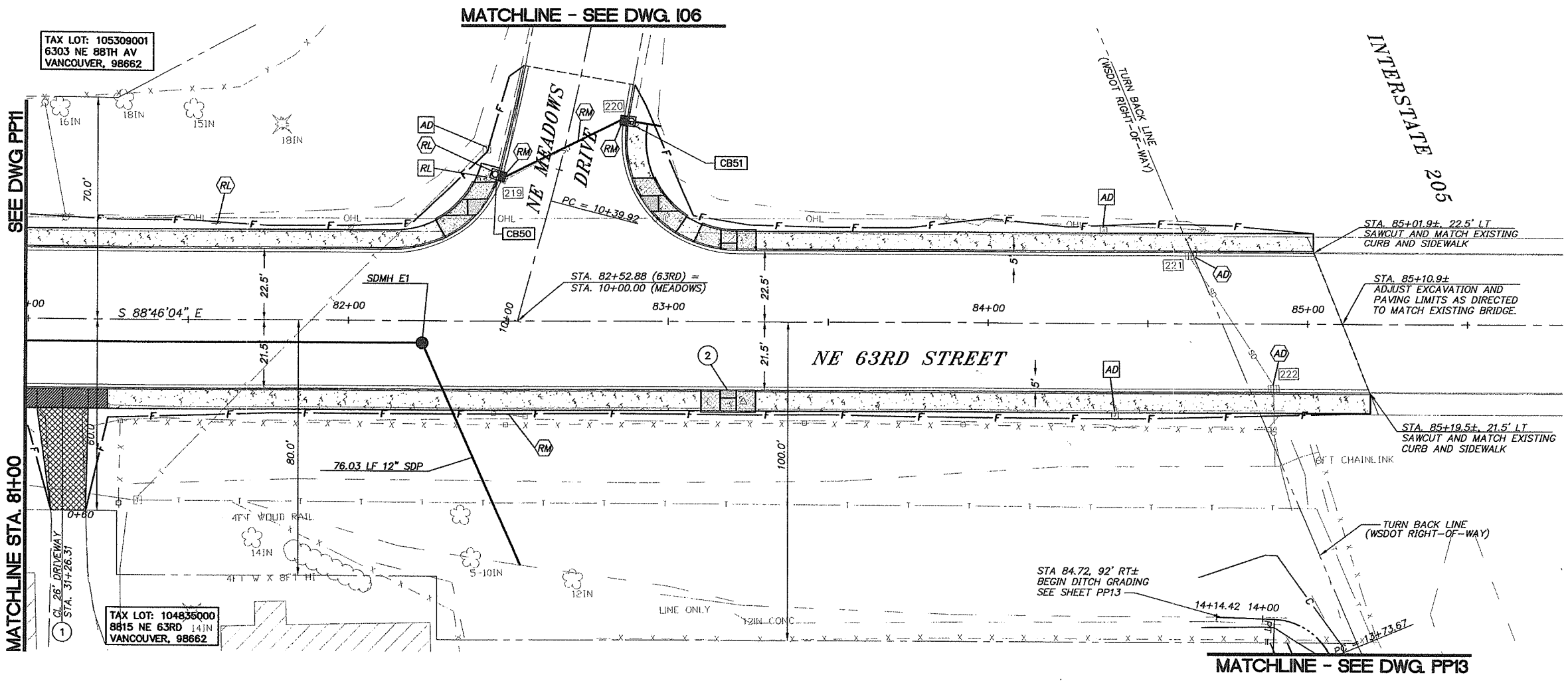

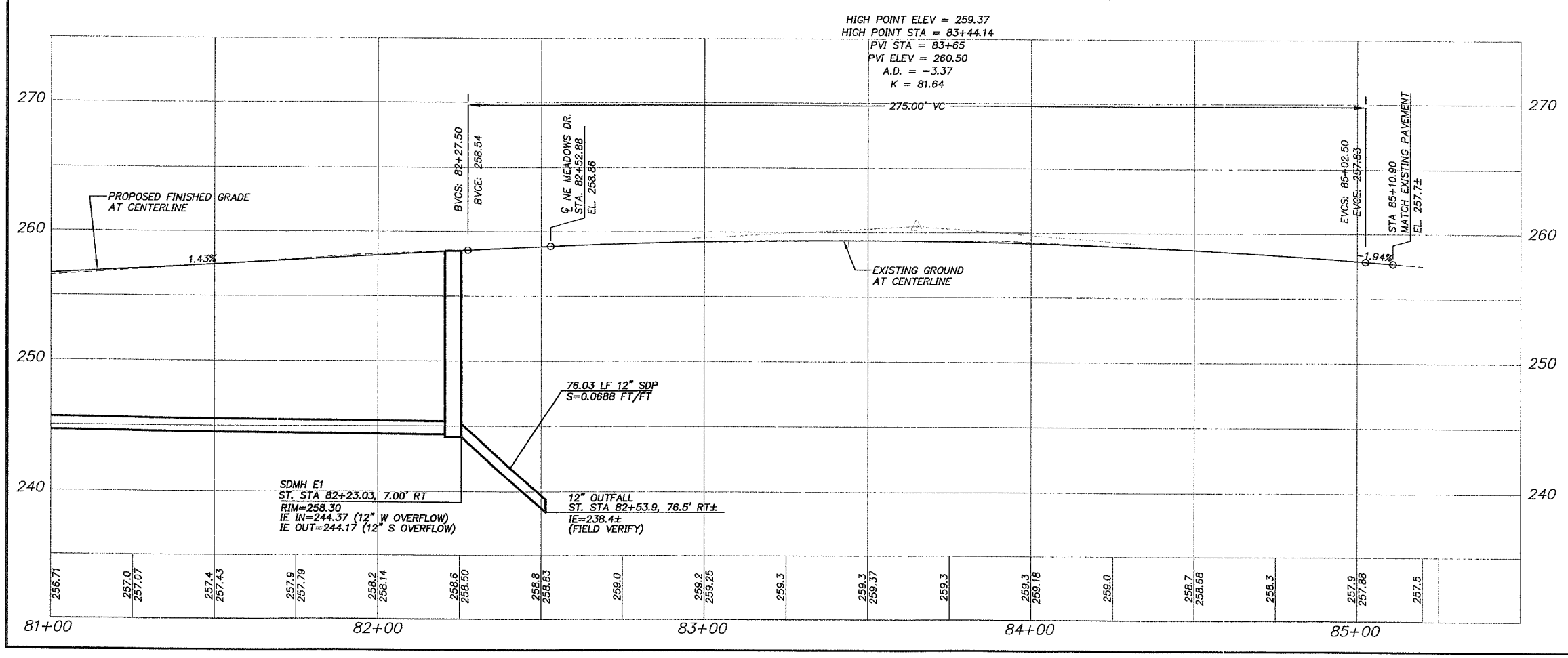

SCALE IN FEET

20 0 20 40

CONSTRUCTION NOTES

1. CONSTRUCT TYPE 3 CEMENT CONCRETE DRIVEWAY APPROACH PER CLARK COUNTY STD. PLAN NO. F14
2. STA 83+18.8, CONSTRUCT TYPE 3 SIDEWALK RAMP PER CLARK COUNTY STD. PLAN NO. F3

CURB INLET INFORMATION

CB50 COMBINATION CURB INLET
REPLACE EXISTING CATCH BASIN
ST. STA. 10+43.48, 17.73' LT.
T.C. ELEV. = 257.67
I.E. (OUT) = 253.42
41 LF 10" SSP
S=0.0200 FT/FT

CB51 COMBINATION CURB INLET
REPLACE EXISTING CATCH BASIN
ST. STA. 10+69.40, 17.00' RT
T.C. ELEV. = 256.76
I.E. (IN) = 252.60
I.E. (OUT) = 252.60 (E)
8 LF 10" SSP

OBJECT TO BE:

REMOVED	= RM
RELOCATED	= RL
ABANDONED	= AB
REPLACED & RELOCATED	= RP
RELOCATED & ADJUSTED TO GRADE	= RA
ADJUSTED TO GRADE	= AD
TRIMMED	= T

BY: CONTRACTOR / CITY/COUNTY FORCES / OTHERS

NOT FOR CONSTRUCTION

DESIGNED: SLW
DRAWN: JRM
CRP: 330422
HORIZ. 1" = 20'
VERT. 1" = 5'
DATE: 8/27/2004
DWG: PP12
SHEET 40 OF 81

CALL 48 HOURS BEFORE YOU DIG 1-800-424-5555 "It's the Law" NORTHWEST UTILITIES NOTIFICATION CENTER

STATE OF WASHINGTON PAUL A. WIEDEMANN REGISTERED PROFESSIONAL ENGINEER EXPIRES APRIL 30, 2005

otak Incorporated
700 Washington St. Suite 401
Vancouver, WA 98660
Phone: (360) 737-9613
FAX: (360) 737-9651

DESIGN & ENGINEERING DIVISION
NE 63RD STREET IMPROVEMENTS
PLAN AND PROFILE - NE 63RD STREET
STA. 81+00 TO STA. 85+25

CLARK COUNTY WASHINGTON
proud past, promising future

REF LIST
tscale: 20
resolved
:944x001_border
:944x500
:944x510
:arcelNames
:KW WASH
944b104
944b106 -
944B200

V: SHERYL 02/23/04 1:09pm --> H:\PROJECT\11900\11944\DWG\C9445030.DWG

REF LIST
tscale: 20
esolved
944x001_border
944x500
944x510
arcelNames
KW WASH
944b104
944b106
944B200

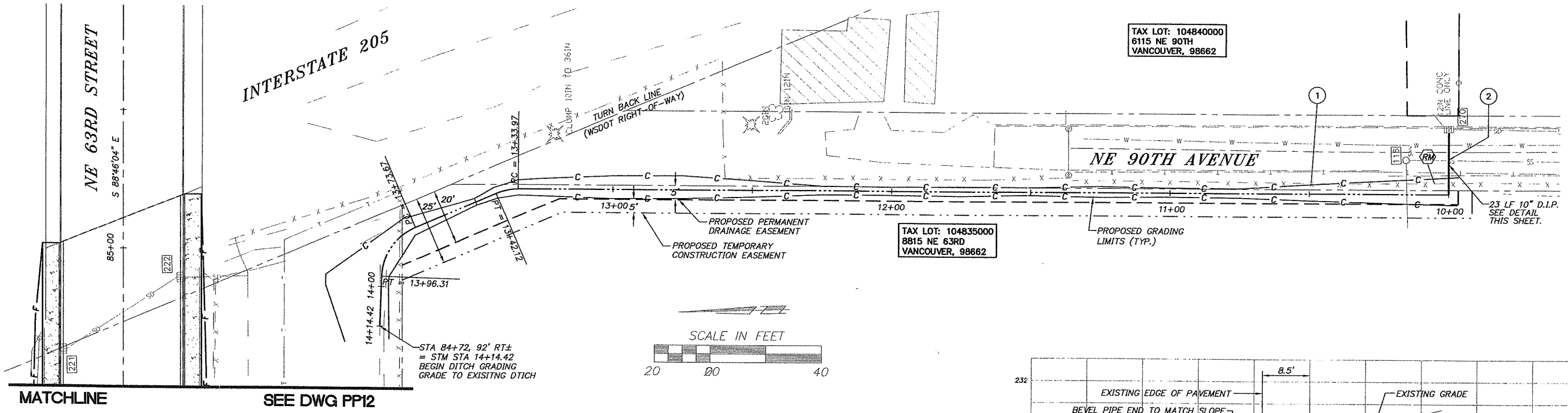

SCALE IN FEET
20 00 40

CONSTRUCTION NOTES

1. REMOVE AND REPLACE EXISTING FENCE AS NECESSARY TO CONSTRUCT DITCH
2. CONTRACTOR TO CONFIRM SANITARY SEWER DEPTH AND LOWER PROPOSED 10" CULVERT AS DIRECTED.

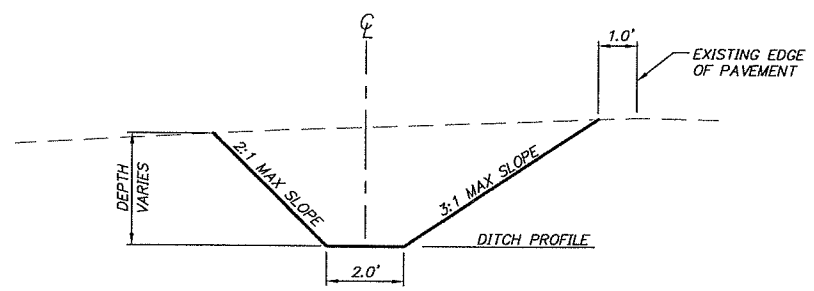

DITCH SECTION
SCALE: 1"=5'

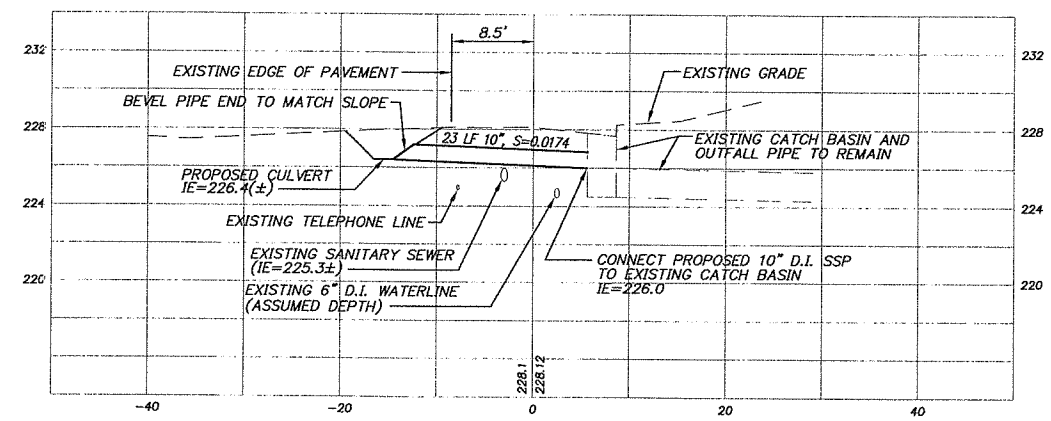

CULVERT CROSSING
SCALE: 1"=10' (HORIZ.), 1"=5' (VERT.)

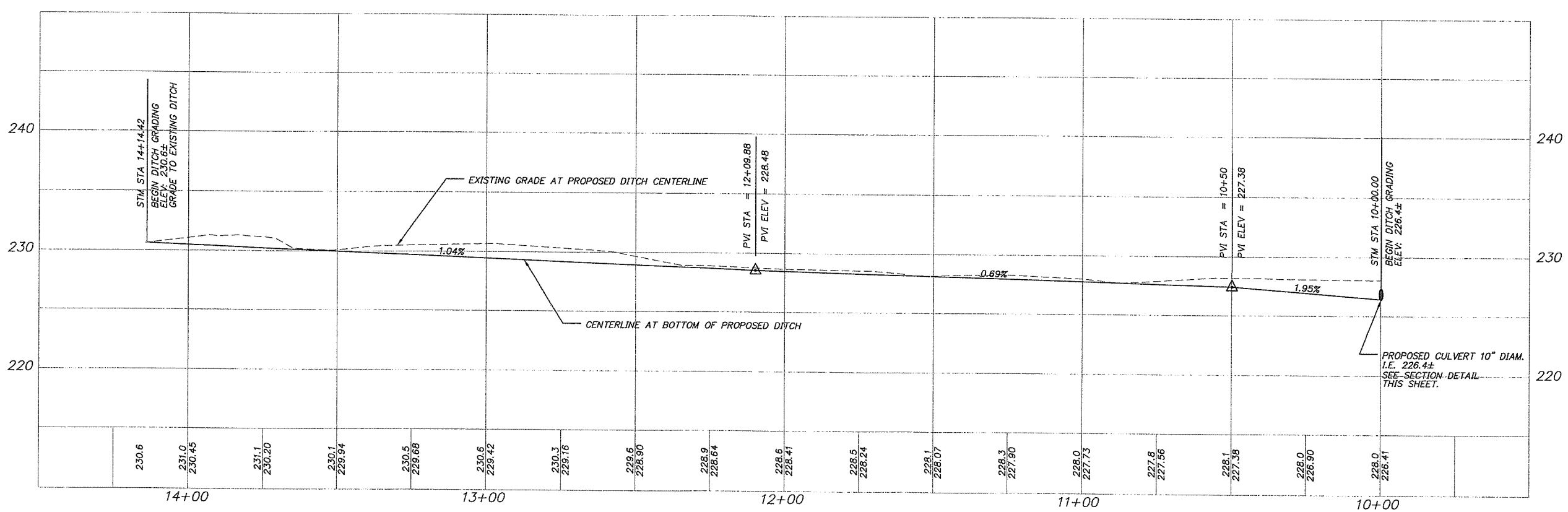

OBJECT TO BE:

REMOVED	= RM
RELOCATED	= RL
ABANDONED	= AB
REPLACED & RELOCATED	= RP
RELOCATED & ADJUSTED TO GRADE	= RA
ADJUSTED TO GRADE	= AD
TRIMMED	= T

BY: CONTRACTOR / CITY/COUNTY FORCES / OTHERS

NOT FOR CONSTRUCTION

DESIGNED: SLW
DRAWN: JRM
CRP: 330422
HORIZ. 1" = 20'
VERT. 1" = 5'
DATE: 8/27/2004
DWG: PP13
SHEET 41 OF 81

CALL 48 HOURS BEFORE YOU DIG 1-800-424-5555 "It's the Law" NORTHWEST UTILITIES NOTIFICATION CENTER

KYLE W. LOEHMANN STATE OF WASHINGTON 22440 REGISTERED PROFESSIONAL ENGINEER EXPIRES: AUG. 31, 2005

oak Incorporated
700 Washington St., Suite 401
Vancouver, WA 98660
Phone: (360) 737-9613
FAX: (360) 737-9651

DESIGN & ENGINEERING DIVISION
NE 63RD STREET IMPROVEMENTS
PLAN AND PROFILE - NE 90TH AVENUE
DITCH TO NE 90TH AVENUE

proud past, promising future
CLARK COUNTY WASHINGTON

V: SHERYL 02/23/04 1:09pm --> H:\PROJECT\11900\11944\DWG\C9445030.DWG

REF LIST
tscale: 20
resolved
944x001_border
944x500
944x510
KW WASH
944b104
944b106
944B200

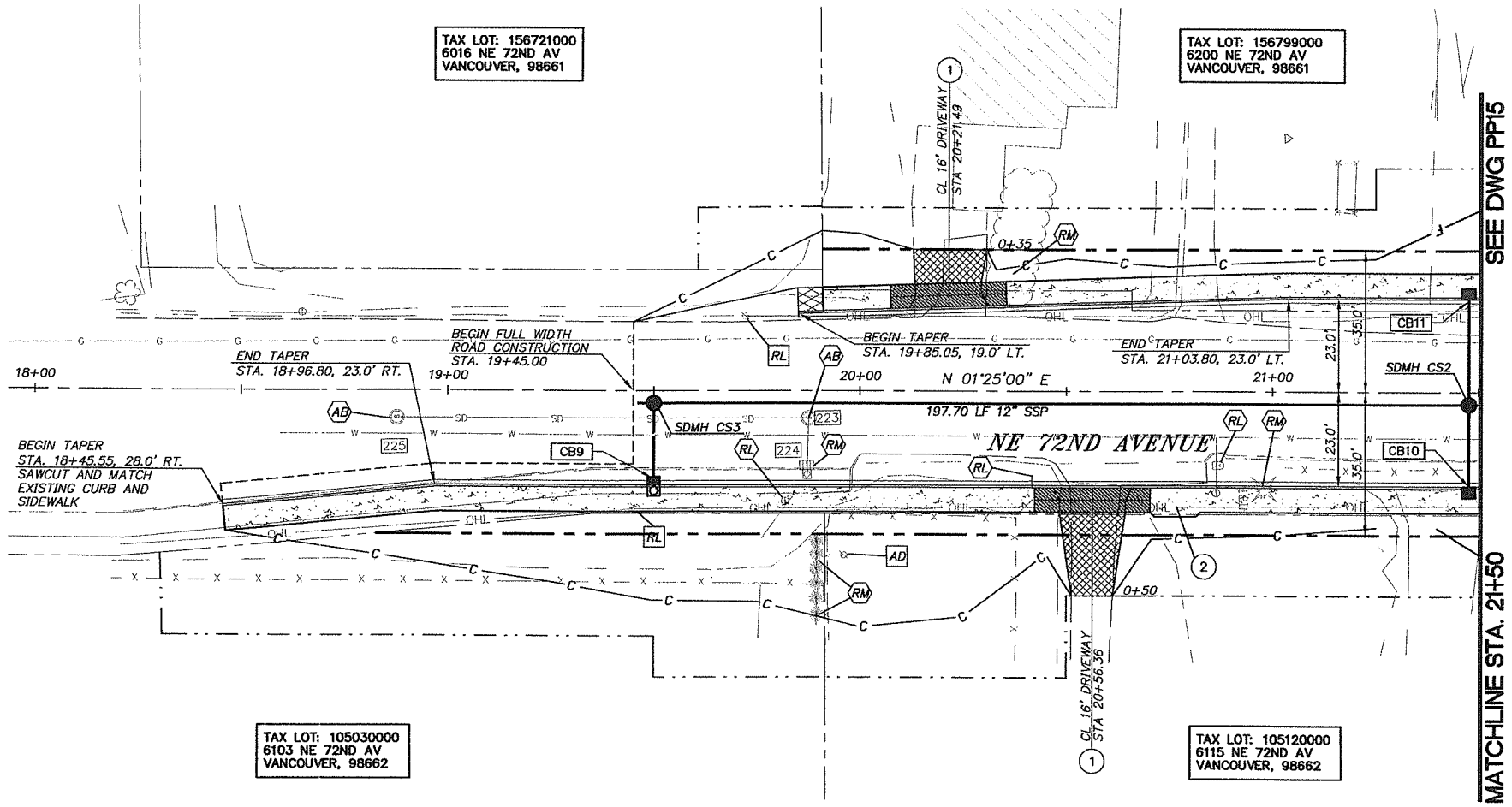

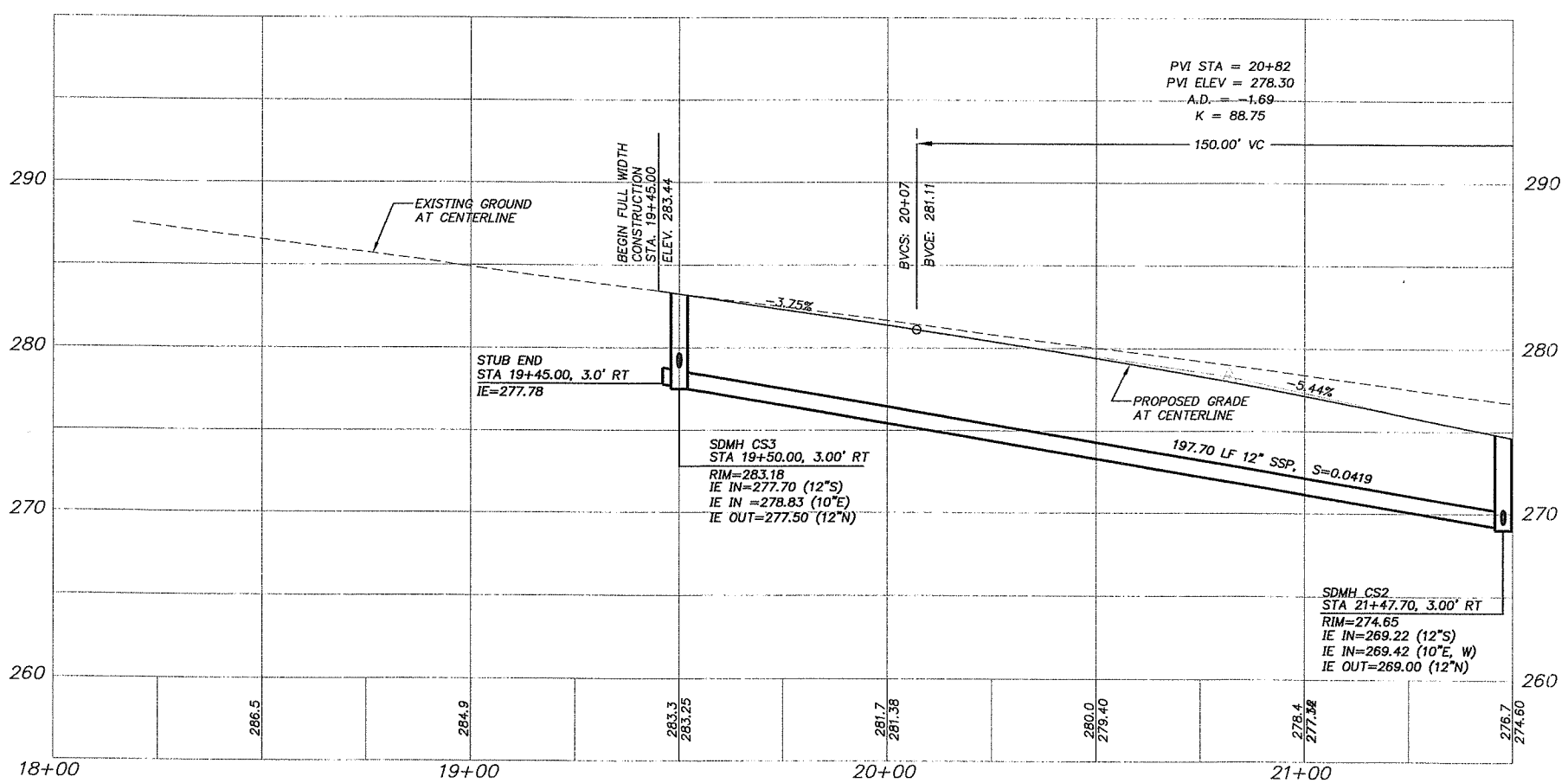

SCALE IN FEET
20 0 20 40

CONSTRUCTION NOTES

1. CONSTRUCT TYPE 2 CEMENT CONCRETE DRIVEWAY APPROACH PER CLARK COUNTY STD. PLAN NO. F15
2. CONSTRUCT WIDEN SIDEWALK FOR MAILBOX PLACEMENT PER CLARK COUNTY STD. PLAN NO. F13.

CURB INLET INFORMATION

CB9 COMBINATION CURB INLET
ST. STA. 19+50.00, 23.00' RT
T.C. ELEV. = 283.23
I.E. (OUT) = 279.23
18 LF 10" STM. PIPE
S=0.0222 FT/FT

CB10 CURB INLET
ST. STA. 21+47.70, 23.00' RT
T.C. ELEV. = 274.65
I.E. (OUT) = 270.65
20 LF 10" STM. PIPE
S=0.0615 FT/FT

CB11 CURB INLET
ST. STA. 21+47.70, 23.00' LT
T.C. ELEV. = 274.65
I.E. (OUT) = 270.65
26 LF 10" STM. PIPE
S=0.0473 FT/FT

OBJECT TO BE:

REMOVED	= RM
RELOCATED	= RL
ABANDONED	= AB
REPLACED & RELOCATED	= RP
RELOCATED & ADJUSTED TO GRADE	= RA
ADJUSTED TO GRADE	= AD
TRIMMED	= T

BY: ⬡ CONTRACTOR ◯ CITY/COUNTY FORCES ☐ OTHERS

NOT FOR CONSTRUCTION

DESIGNED:	SLW
DRAWN:	JRM
CRP:	330422
HORIZ.	1" = 20'
VERT.	1" = 5'
DATE:	8/27/2004
DWG:	PP14
SHEET	42 OF 81

CALL 48 HOURS BEFORE YOU DIG 1-800-424-5555 "It's the Law" NORTHWEST UTILITIES NOTIFICATION CENTER

STATE OF WASHINGTON PAUL E. WEDEMANN REGISTERED PROFESSIONAL ENGINEER EXPIRES AUG. 31, 2005

otak Incorporated
700 Washington St. Suite 401
Vancouver, WA 98660
Phone: (360) 737-9613
FAX: (360) 737-9651

DESIGN & ENGINEERING DIVISION
NE 63RD STREET IMPROVEMENTS

PLAN AND PROFILE – NE 72ND AVENUE
STA. 18+00 TO STA. 21+50

proud past, promising future
CLARK COUNTY WASHINGTON

V: SHERYL 08/24/04 7:11pm --> V:\PROJECT\11900\11944\DWG\C944S039.DWG

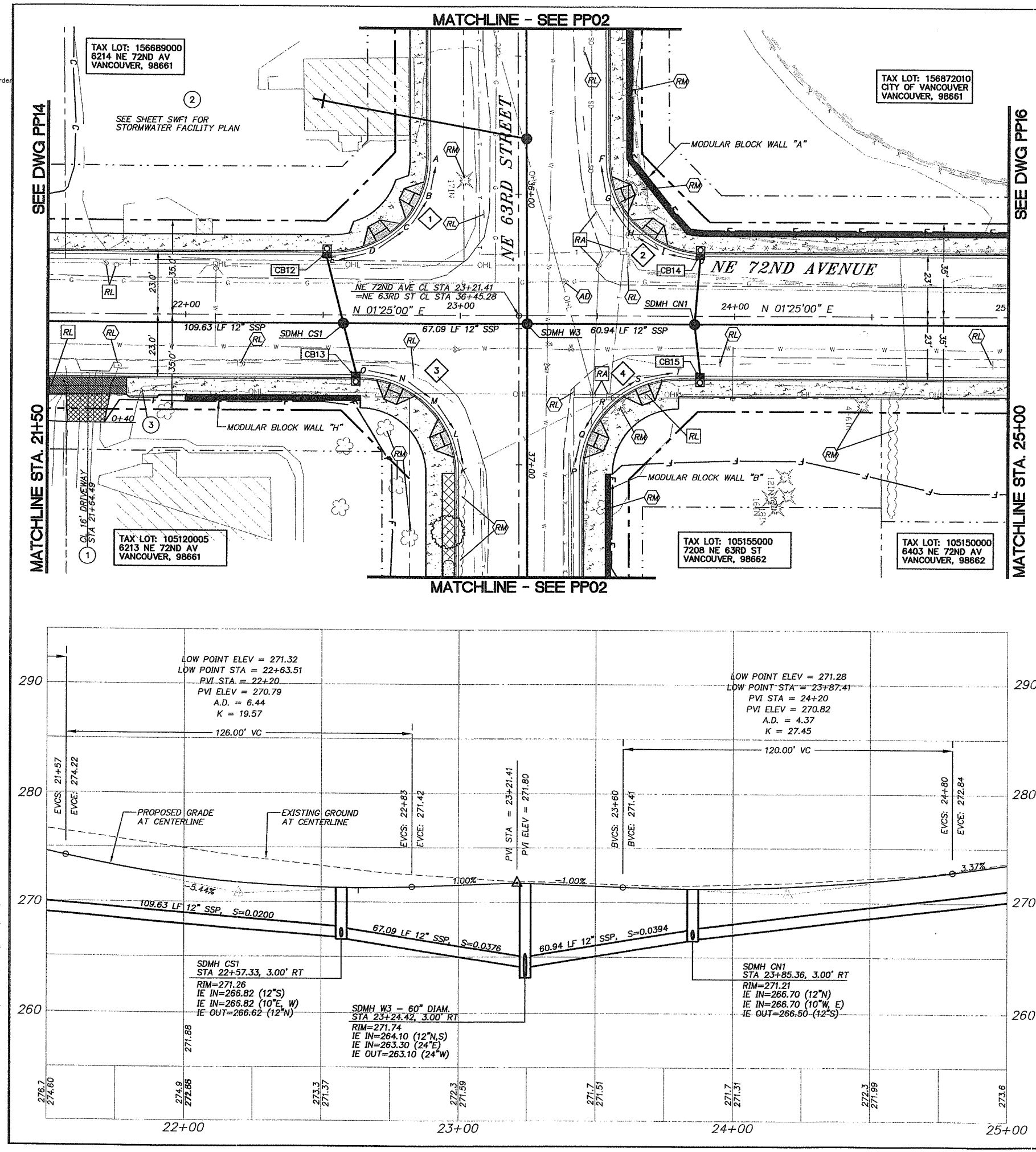

SCALE IN FEET

20 0 20 40

CURB RETURN TABLE

CURVE	STATION/OFFSET	SYMBOL △/4	T.O.C. ELEV.
1	BCR 35+86.78 33.0' RT	A	270.84
		B	271.02
		C	271.10
△ = 90°24'59" R = 35.00' L = 55.23'	ECR 36+21.80 68.3' RT	D	271.18
		E	271.28
2	BCR 35+87.77 33.00' LT	F	270.85
		G	270.95
△ = 89°35'01" R = 35.00' L = 54.72'		H	271.08
	ECR 36+22.75 67.8' LT	I	271.15
		J	271.21
3	BCR 37+03.06 23.0' RT	K	270.97
		L	271.04
△ = 89°47'03" R = 35.00' L = 54.85'		M	271.11
	ECR 36+68.06 57.9' RT	N	271.18
		O	271.25
4	BCR 37+03.50 23.0' LT	P	270.99
		Q	271.22
△ = 90°12'57" R = 35.00' L = 55.11'		R	271.36
	ECR 36+68.50 58.1' LT	S	271.29
		T	271.22

CONSTRUCTION NOTES

1. CONSTRUCT TYPE 2 CEMENT CONCRETE DRIVEWAY APPROACH PER CLARK COUNTY STD. PLAN NO. F15
2. SEE SHEET SWF1 FOR STORMWATER FACILITY PLAN AND DETAILS.
3. CONSTRUCT WIDEN SIDEWALK FOR MAILBOX PLACEMENT PER CLARK COUNTY STD. PLAN NO. F13.

CURB INLET INFORMATION

CB12 COMBINATION CURB INLET
ST. STA. 22+51.32, 23.00' LT
T.C. ELEV. = 271.28
I.E. (OUT) = 267.36
25 LF 10" STM. PIPE
S=0.0216 FT/FT

CB13 COMBINATION CURB INLET
ST. STA. 22+61.96 , 23.00' RT
T.C. ELEV. = 271.25
I.E. (OUT) = 267.24
19 LF 10" STM. PIPE
S=0.0221 FT/FT

CB14 COMBINATION CURB INLET
ST. STA. 23+87.41, 23.00' LT
T.C. ELEV. = 271.21
I.E. (OUT) = 267.24
24 LF 10" STM. PIPE
S=0.0225 FT/FT

CB15 COMBINATION CURB INLET
ST. STA. 23+87.41, 23.00' RT
T.C. ELEV. = 271.21
I.E. (OUT) = 267.21
18 LF 10" STM. PIPE
S=0.0283 FT/FT

OBJECT TO BE:

REMOVED	= RM
RELOCATED	= RL
ABANDONED	= AB
REPLACED & RELOCATED	= RP
RELOCATED & ADJUSTED TO GRADE	= RA
ADJUSTED TO GRADE	= AD
TRIMMED	= T

BY: CONTRACTOR / CITY/COUNTY FORCES / OTHERS

NOT FOR CONSTRUCTION

DESIGNED: SLW
DRAWN: JRM
CRP: 330422
HORIZ. 1" = 20'
VERT. 1" = 5'
DATE: 8/27/2004
DWG: PP15
SHEET 43 OF 81

CALL 48 HOURS BEFORE YOU DIG 1-800-424-5555 "It's the Law" NORTHWEST UTILITIES NOTIFICATION CENTER

PAMELA K. WICKEMANN STATE OF WASHINGTON REGISTERED PROFESSIONAL ENGINEER EXPIRES AUG. 31, 2005

otak Incorporated
700 Washington St. Suite 401
Vancouver, WA 98660
Phone: (360) 737-9813
FAX: (360) 737-9651

DESIGN & ENGINEERING DIVISION
NE 63RD STREET IMPROVEMENTS

PLAN AND PROFILE - NE 72ND STREET
STA. 21+50 TO STA. 25+00

proud past, promising future
CLARK COUNTY WASHINGTON

:REF_LIST
:tscale: 20
:esolved
:944x001_border
:944x500
:944x510
:KW WASH
:944b104
:944b106
:944B200~

V: SHERYL 08/24/04 7:15pm --> V:\PROJECT\11900\11944\DWG\C944S040.DWG

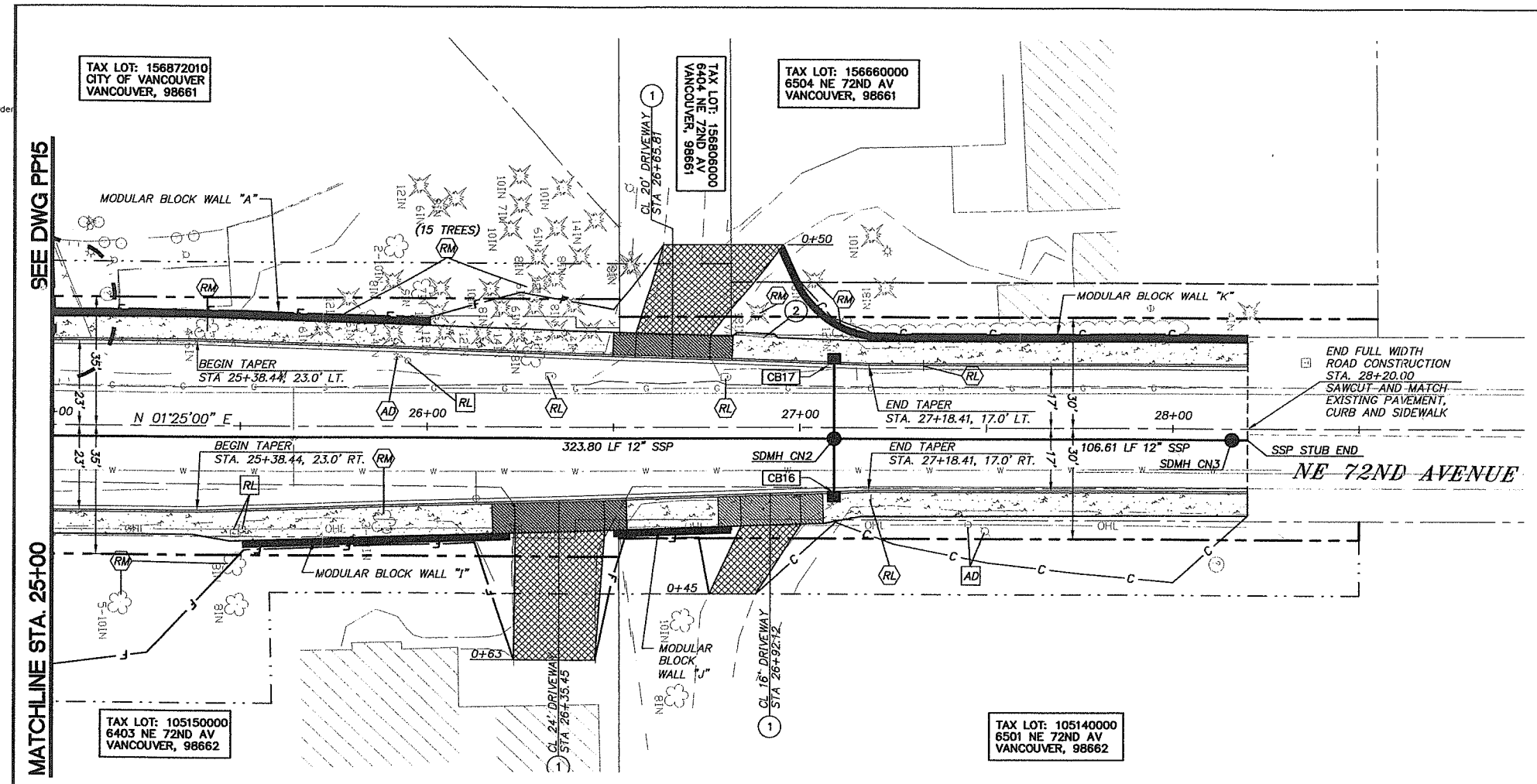

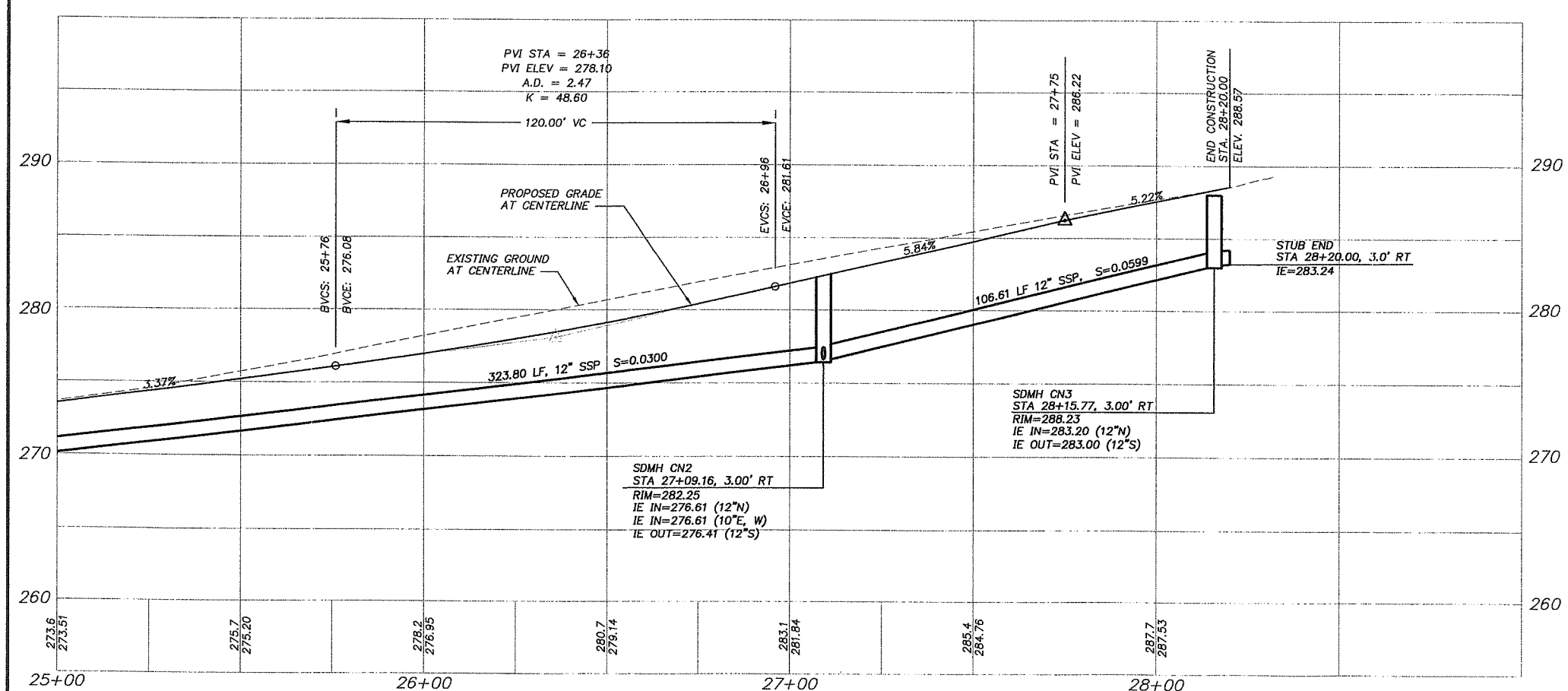

SCALE IN FEET

20 0 20 40

CONSTRUCTION NOTES

1. CONSTRUCT TYPE 3 CEMENT CONCRETE DRIVEWAY APPROACH PER CLARK COUNTY STD. PLAN NO. F16
2. CONSTRUCT WIDEN SIDEWALK FOR MAILBOX PLACEMENT PER CLARK COUNTY STD. PLAN NO. F13.

CURB INLET INFORMATION

CB16 CURB INLET
ST. STA. 27+09.16, 17.31' RT
T.C. ELEV. = 282.30
I.E. (OUT) = 277.30
14 LF 10" STM. PIPE
S=0.0493 FT/FT

CB17 CURB INLET
ST. STA. 27+09.16, 17.31' LT
T.C. ELEV. = 282.52
I.E. (OUT) = 277.52
20 LF 10" STM. PIPE
S=0.0455 FT/FT

OBJECT TO BE:

REMOVED	= RM
RELOCATED	= RL
ABANDONED	= AB
REPLACED & RELOCATED	= RP
RELOCATED & ADJUSTED TO GRADE	= RA
ADJUSTED TO GRADE	= AD
TRIMMED	= T

BY: ⬡ CONTRACTOR ○ CITY/COUNTY FORCES □ OTHERS

NOT FOR CONSTRUCTION

DESIGNED: SLW
DRAWN: JRM
CRP: 330422
HORIZ. 1" = 20'
VERT. 1" = 5'
DATE: 8/27/2004
DWG: PP16
SHEET 44 OF 81

CALL 48 HOURS BEFORE YOU DIG 1-800-424-5555 "It's the Law" NORTHWEST UTILITIES NOTIFICATION CENTER

STATE OF WASHINGTON PAUL E. WIEDEMANN REGISTERED PROFESSIONAL ENGINEER EXPIRES AUG. 31, 2005

otak Incorporated
700 Washington St. Suite 401
Vancouver, WA 98660
Phone: (360) 737-9613
FAX: (360) 737-9851

DESIGN & ENGINEERING DIVISION
NE 63RD STREET IMPROVEMENTS

PLAN AND PROFILE - NE 72ND STREET
STA. 25+00 TO STA. 28+50

proud past, promising future
CLARK COUNTY WASHINGTON

REF LIST
tscale: 20
resolved
944x001_border
944x500
944x510
KW WASH
944b104
944b106
944B200

V: SHERYL 08/24/04 7:18pm --> V:\PROJECT\11900\11944\DWG\G944S041.DWG

XREF LIST
_tscale: 20
Resolved
5944x001_border
5944x500
5944x510
ParcelNumbers
PKW WASH
5944b104
5944b106
5944B200

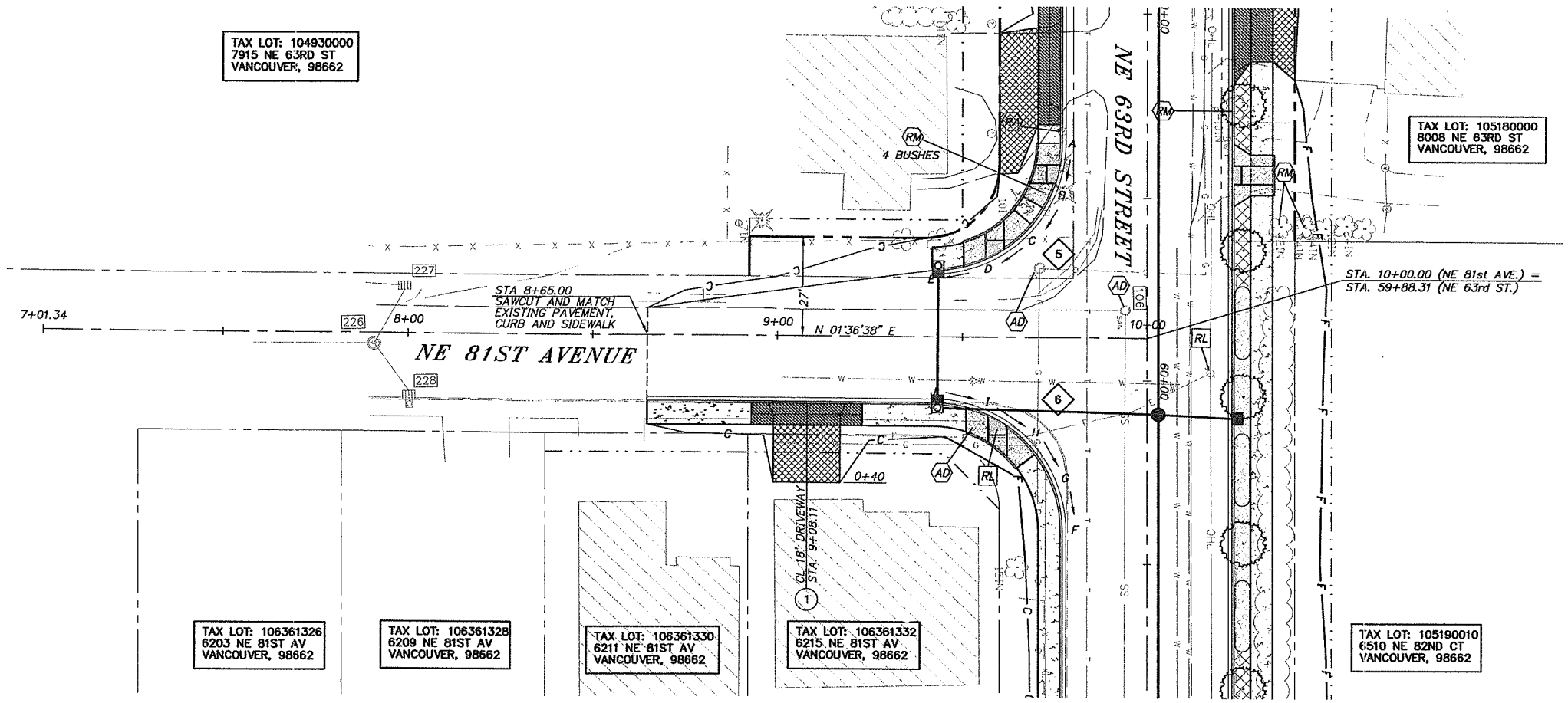

CURB RETURN TABLE

CURVE	STATION/OFFSET	SYMBOL Δ/4	T.O.C. ELEV.
5	BCR 59+34.92	A	275.50
	23.00' RT	B	275.16
Δ = 90°23'23"		C	274.60
R = 35.00'	ECR 59+69.92	D	274.48
L = 55.22'	58.24' RT	E	274.35
6	BCR 60+40.92	F	273.98
	23.00' RT	G	274.08
Δ = 89°36'37"		H	274.16
R = 35.00'	ECR 60+05.92	I	274.24
L = 54.74'	57.76' RT	J	274.33

CONSTRUCTION NOTES

1. CONSTRUCT TYPE 2 CEMENT CONCRETE DRIVEWAY APPROACH PER CLARK COUNTY STD. PLAN NO. F15

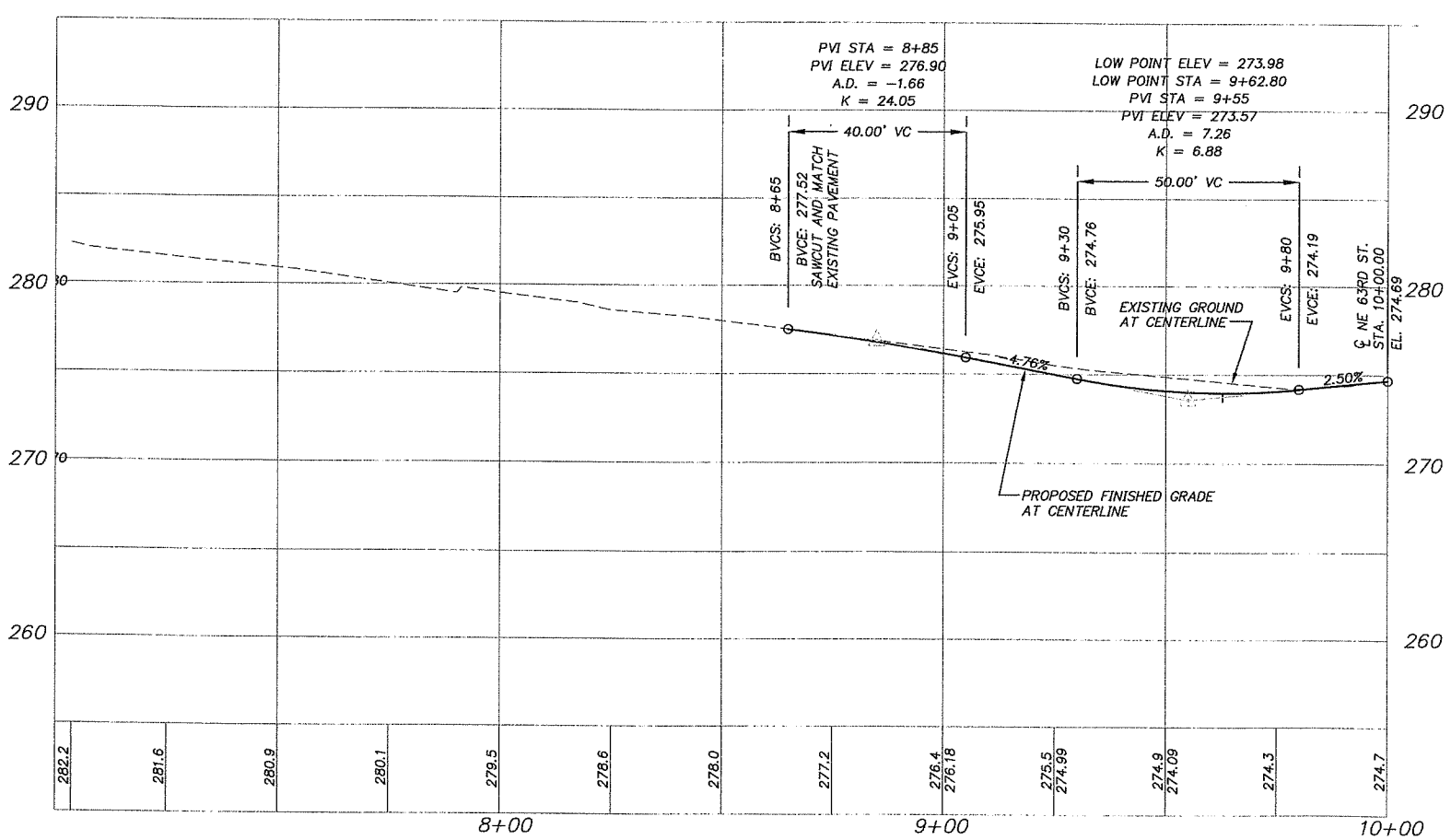

OBJECT TO BE:

REMOVED	= RM
RELOCATED	= RL
ABANDONED	= AB
REPLACED & RELOCATED	= RP
RELOCATED & ADJUSTED TO GRADE	= RA
ADJUSTED TO GRADE	= AD
TRIMMED	= T

BY: CONTRACTOR / CITY/COUNTY FORCES / OTHERS

NOT FOR CONSTRUCTION

DESIGNED:	SLW
DRAWN:	JRM
CRP:	330422
HORIZ.	1" = 20'
VERT.	1" = 5'
DATE:	8/27/2004
DWG:	101
SHEET	4.5 OF 81

CALL 48 HOURS BEFORE YOU DIG 1-800-424-5555 "It's the Law" NORTHWEST UTILITIES NOTIFICATION CENTER

PAUL A. LEHMANN STATE OF WASHINGTON 22440 REGISTERED PROFESSIONAL ENGINEER
EXPIRES AUG. 31, 2005

oak Incorporated
700 Washington St. Suite 401
Vancouver, WA. 98660
Phone: (360) 737-9813
FAX: (360) 737-9651

DESIGN & ENGINEERING DIVISION
NE 63RD STREET IMPROVEMENTS

PLAN AND PROFILE
NE 81ST AVENUE

proud past, promising future
CLARK COUNTY WASHINGTON

V: SADE 02/24/04 2:59pm --> R:\DWG\C9445036.DWG

REF LIST
tscale: 20
esolved
944x001_border
944x500
944x510
KW WASH
944b104
944b106
944B200

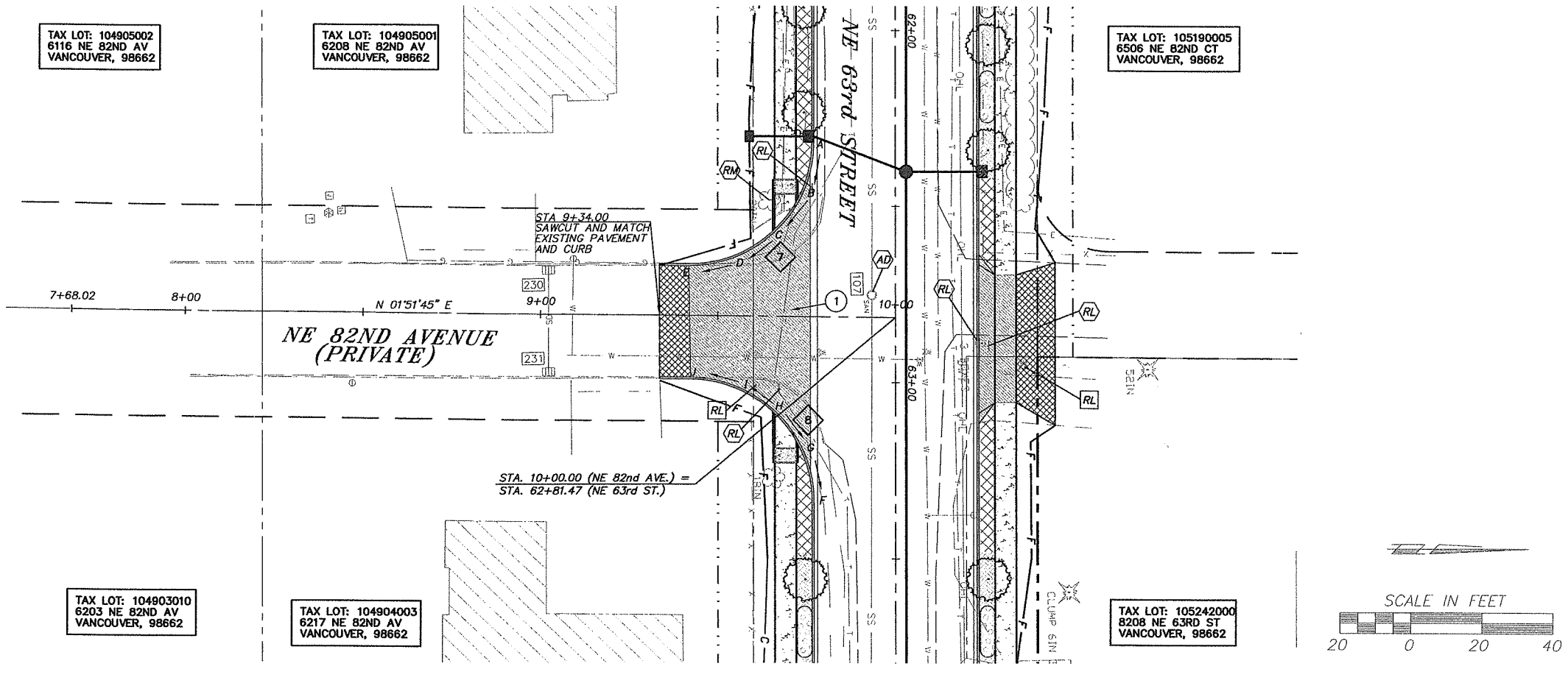

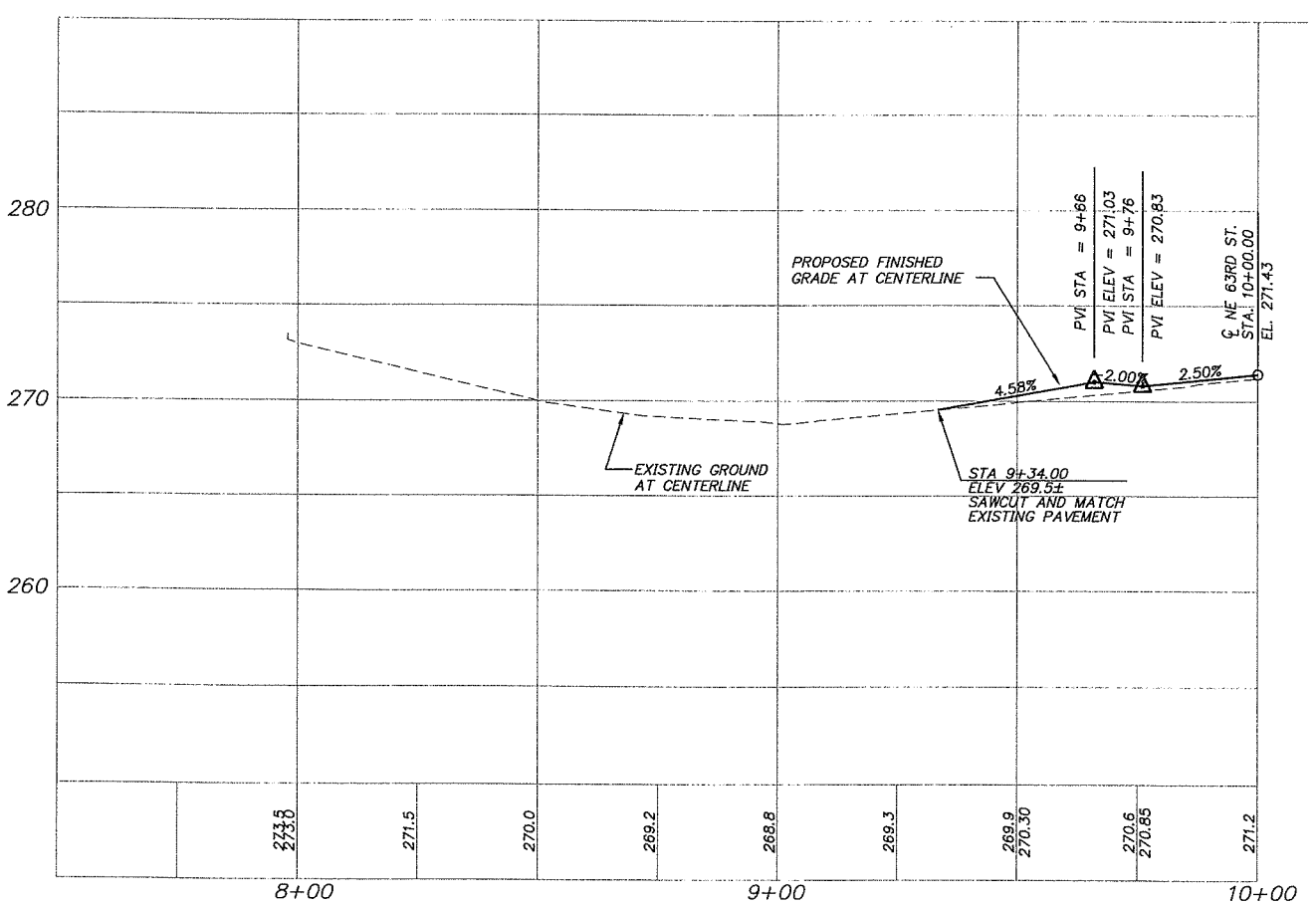

CURB RETURN TABLE

CURVE	STATION/OFFSET	SYMBOL Δ/4	T.O.C. ELEV.
7	BCR 62+31.85	A	271.90
	23.00' RT	B	271.52
Δ = 90°16'57"		C	271.03
R = 35.00'	ECR 62+66.85	D	270.72
L = 55.15'	58.17' RT	E	270.06
8	BCR 63+33.40	F	270.79
	23.00' RT	G	270.97
Δ =89°30'51"		H	271.10
R = 35.00'	ECR 62+98.40	I	270.63
L = 54.68'	57.70' RT	J	270.01

CONSTRUCTION NOTES

1. CONSTRUCT COMMERCIAL CONCRETE DRIVEWAY APPROACH PER CLARK COUNTY STD. PLAN NO. F17 ON SHEET D02.

OBJECT TO BE:

REMOVED	= RM
RELOCATED	= RL
ABANDONED	= AB
REPLACED & RELOCATED	= RP
RELOCATED & ADJUSTED TO GRADE	= RA
ADJUSTED TO GRADE	= AD
TRIMMED	= T

BY: ⬡ CONTRACTOR ◯ CITY/COUNTY FORCES ☐ OTHERS

NOT FOR CONSTRUCTION

DESIGNED: SLW
DRAWN: JRM
CRP: 330422
HORIZ. 1" = 20'
VERT. 1" = 5'
DATE: 8/27/2004
DWG: 102
SHEET 46 OF 81

CALL 48 HOURS BEFORE YOU DIG 1-800-424-5555 "It's the Law" NORTHWEST UTILITIES NOTIFICATION CENTER

PAUL A. STEL WEDEMANN STATE OF WASHINGTON REGISTERED PROFESSIONAL ENGINEER EXPIRES 2005, SEP. 2005

oak Incorporated
700 Washington St. Suite 401
Vancouver, WA 98660
Phone: (360) 737-9613
FAX: (360) 737-9651

DESIGN & ENGINEERING DIVISION
NE 63RD STREET IMPROVEMENTS

PLAN AND PROFILE
NE 82ND AVENUE

proud past, promising future
CLARK COUNTY WASHINGTON

V: SADE 02/24/04 3:00pm --> R:\DWG\C944S037.DWG

REF LIST
tscale: 20
esolved
944x001_border
944x500
944x510
944X700
KW WASH
944b104
944b106
944B200

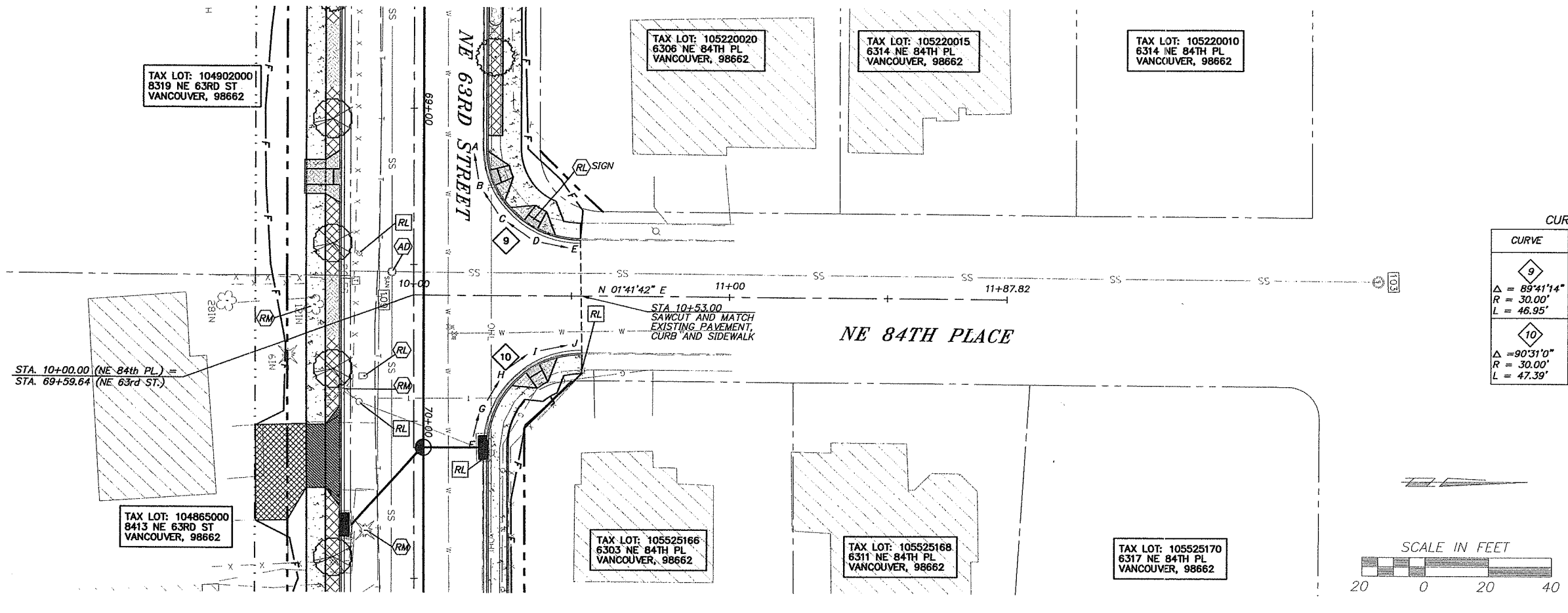

CURB RETURN TABLE

CURVE	STATION/OFFSET	SYMBOL Δ/4	T.O.C. ELEV.
9	BCR 69+12.13	A	269.05
	23.00' LT	B	269.36
Δ = 89°41'14"		C	269.50
R = 30.00'	ECR 69+42.13	D	269.60
L = 46.95'	52.84' LT	E	269.47
10	BCR 70+08.32	F	271.95
	23.00' LT	G	271.45
Δ =90°31'0"		H	270.65
R = 30.00'	ECR 69+78.31	I	269.87
L = 47.39'	53.26' LT	J	269.46

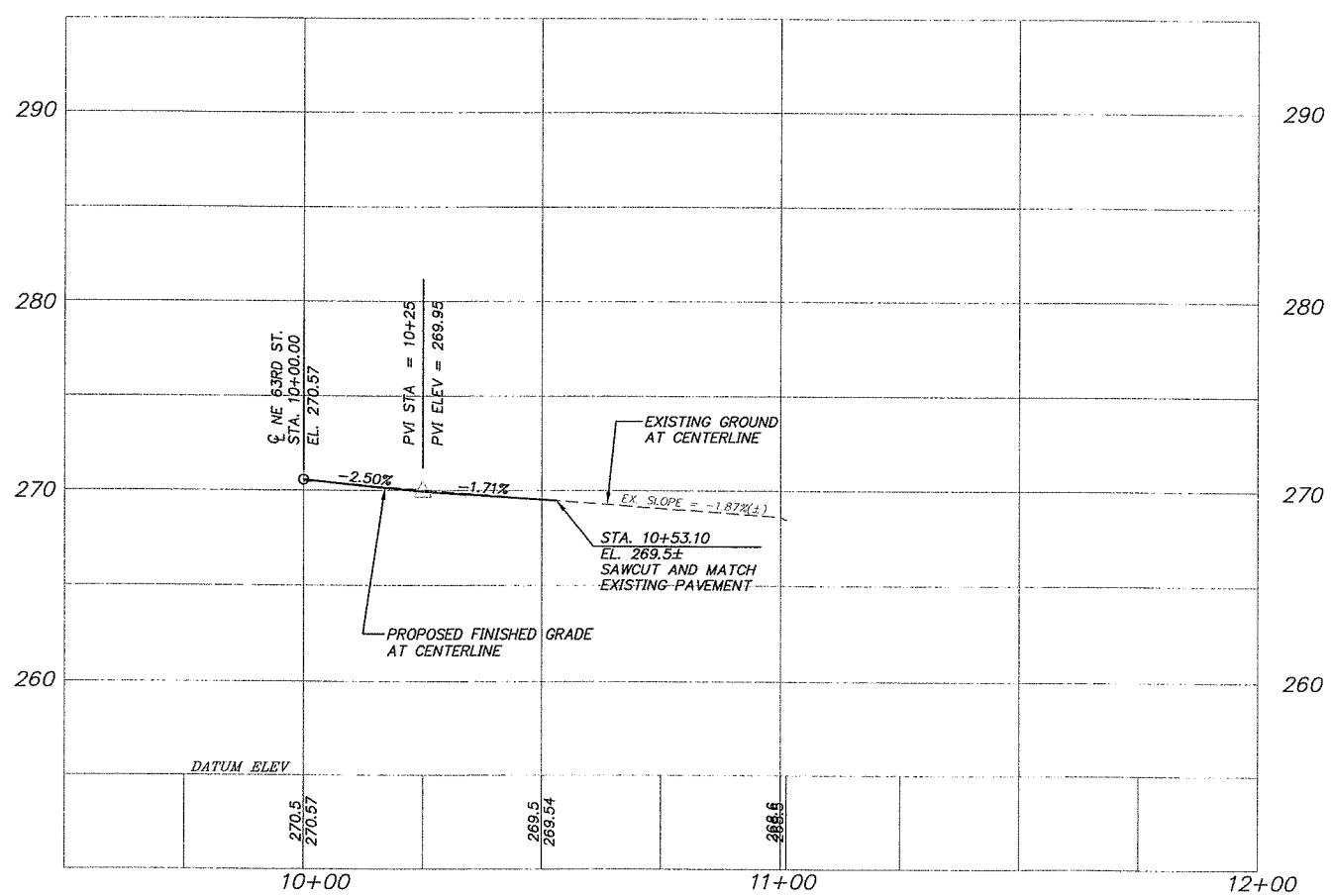

OBJECT TO BE:

REMOVED	= RM
RELOCATED	= RL
ABANDONED	= AB
REPLACED & RELOCATED	= RP
RELOCATED & ADJUSTED TO GRADE	= RA
ADJUSTED TO GRADE	= AD
TRIMMED	= T

BY: ⬡ CONTRACTOR
⬡ CITY/COUNTY FORCES
□ OTHERS

NOT FOR CONSTRUCTION

DESIGNED: SLW
DRAWN: JRM
CRP: 330422
HORIZ. 1" = 20'
VERT. 1" = 5'
DATE: 8/27/2004
DWG: 103
SHEET 47 OF 81

CALL 48 HOURS BEFORE YOU DIG
1-800-424-5555
"It's the Law"
NORTHWEST UTILITIES NOTIFICATION CENTER

PAMELA J. WOLTMANN
STATE OF WASHINGTON
22440
REGISTERED PROFESSIONAL ENGINEER
EXPIRES JULY 31, 2005

oak Incorporated
700 Washington St. Suite 401
Vancouver, WA 98660
Phone: (360) 737-9613
FAX: (360) 737-9651

DESIGN & ENGINEERING DIVISION
NE 63RD STREET IMPROVEMENTS

PLAN AND PROFILE
NE 84TH PLACE

proud past, promising future
CLARK COUNTY WASHINGTON

V: SHERYL 08/24/04 7:21pm --> V:\PROJECT\11900\11944\DWG\C9445044.DWG

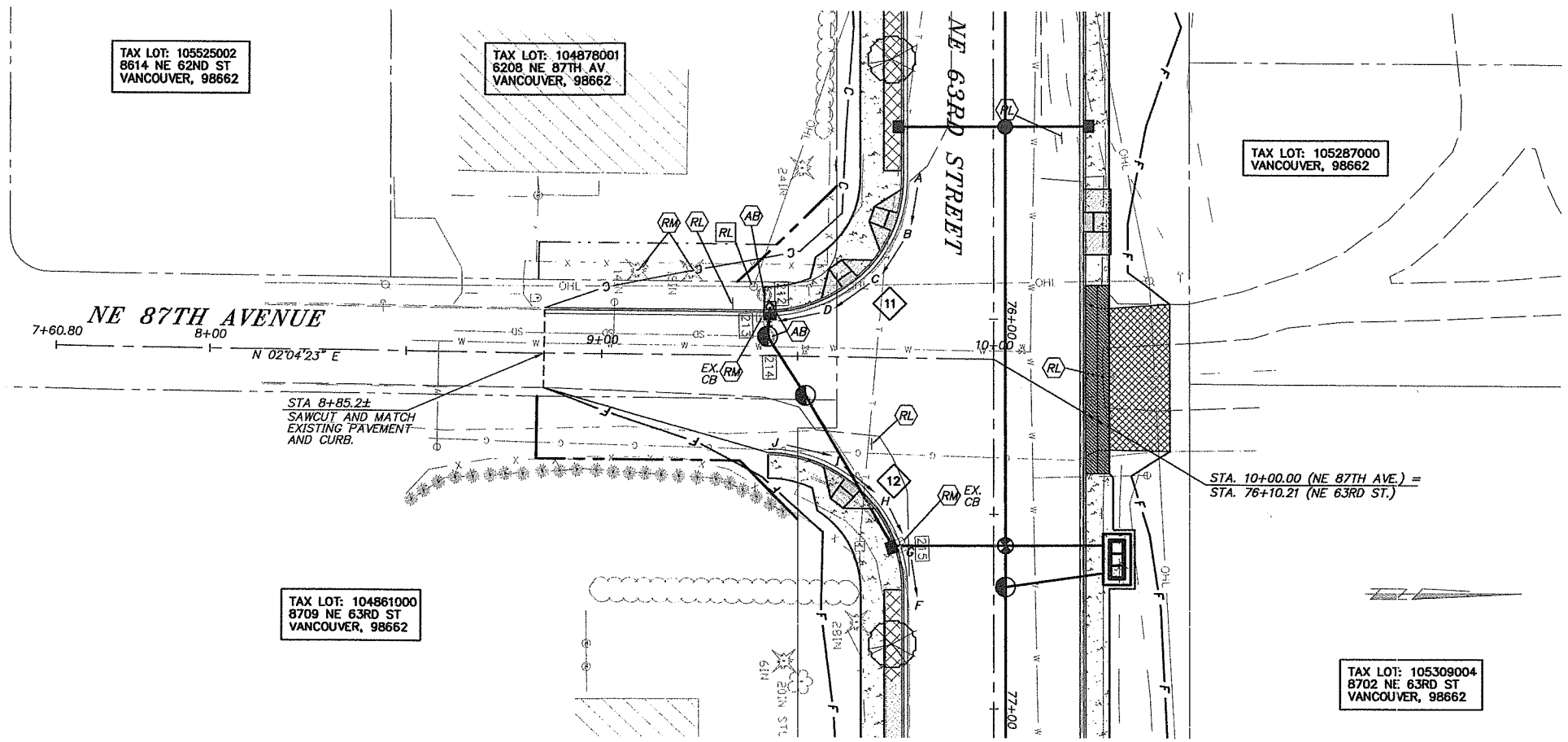

CURB RETURN TABLE

CURVE	STATION/OFFSET	SYMBOL Δ/4	T.O.C. ELEV.
11	BCR 75+63.16	A	265.26
	23.00' RT	B	264.52
Δ = 90°52'25"		C	263.54
R = 35.00'	ECR 75+98.15	D	262.75
L = 55.51'	58.53' RT	E	262.55
12	BCR 76+69.24	F	260.72
	23.00' RT	G	261.29
Δ = 89°11'38"		H	261.73
R = 35.00'	ECR 76+34.21	I	262.04
L = 54.49'	57.50' RT	J	262.21

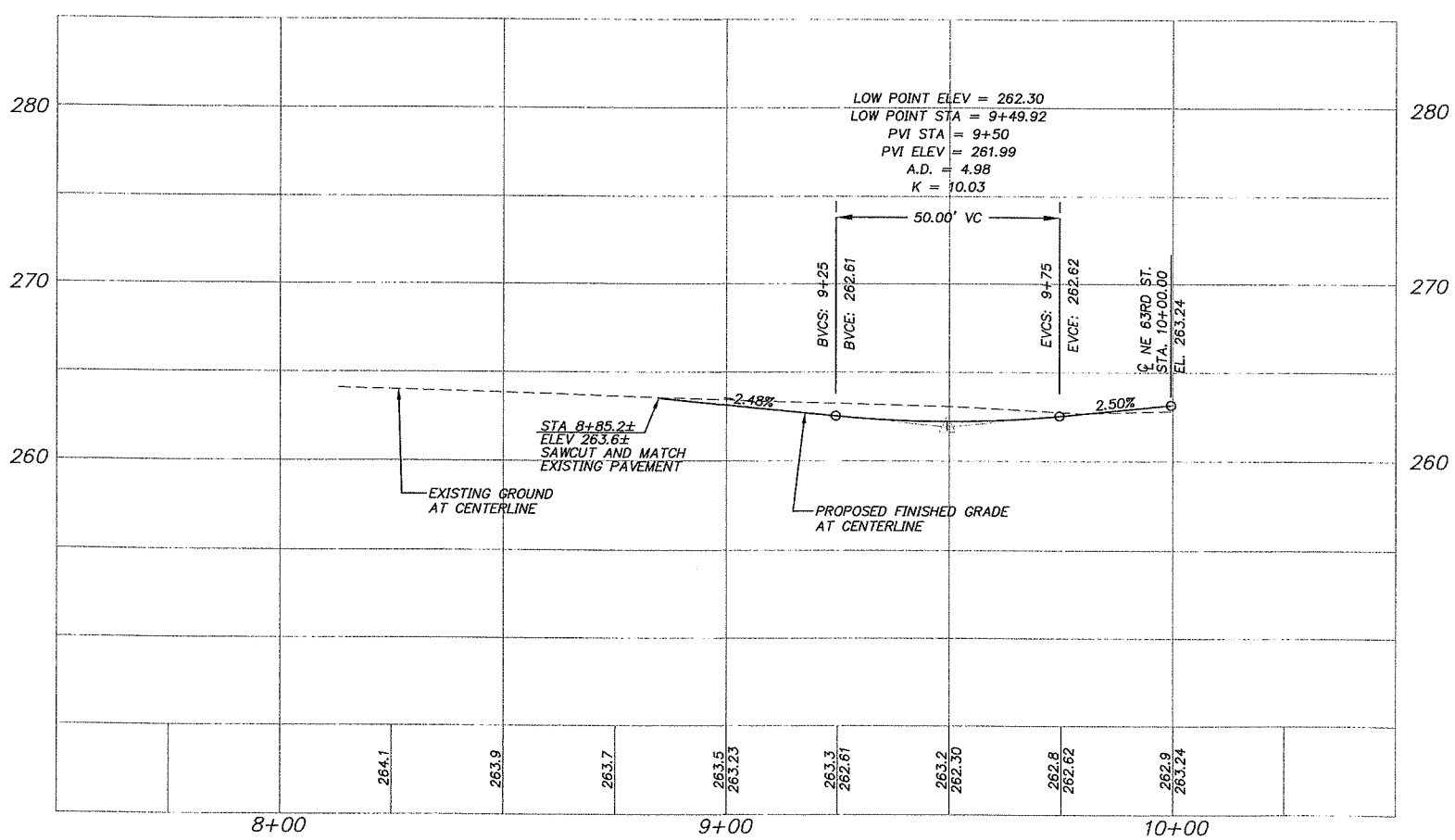

OBJECT TO BE:

REMOVED	= RM
RELOCATED	= RL
ABANDONED	= AB
REPLACED & RELOCATED	= RP
RELOCATED & ADJUSTED TO GRADE	= RA
ADJUSTED TO GRADE	= AD
TRIMMED	= T

BY: ⬡ CONTRACTOR ◯ CITY/COUNTY FORCES ☐ OTHERS

NOT FOR CONSTRUCTION

DESIGN & ENGINEERING DIVISION
NE 63RD STREET IMPROVEMENTS

PLAN AND PROFILE
NE 87TH AVENUE

DESIGNED: SLW
DRAWN: GME
CRP: 330422
HORIZ. 1" = 20'
VERT. 1" = 5'
DATE: 8/27/2004
DWG: 104
SHEET 48 OF 81

CALL 48 HOURS BEFORE YOU DIG 1-800-424-5555 "It's the Law" NORTHWEST UTILITIES NOTIFICATION CENTER

STATE OF WASHINGTON PAMELA K. E. L. W. EDEMANN 22440 REGISTERED PROFESSIONAL ENGINEER EXPIRES AUG. 31, 2005

otak Incorporated
700 Washington St. Suite 401
Vancouver, WA 98660
Phone: (360) 737-9613
FAX: (360) 737-9651

proud past, promising future
CLARK COUNTY WASHINGTON

(REF LIST
tscale: 20
tesolved
944x001_border
944x500
944x510
944X700
KW WASH
944b104
944b106
944B200

V: SHERYL 08/24/04 7:22pm --> V:\PROJECT\11900\11944\DWG\C9445045.DWG

:REF LIST
:scale: 20
:esolved
:944x001_border
:944x500
:944x510
:944X700
:KW WASH
:944b104
:944b106
:944B200

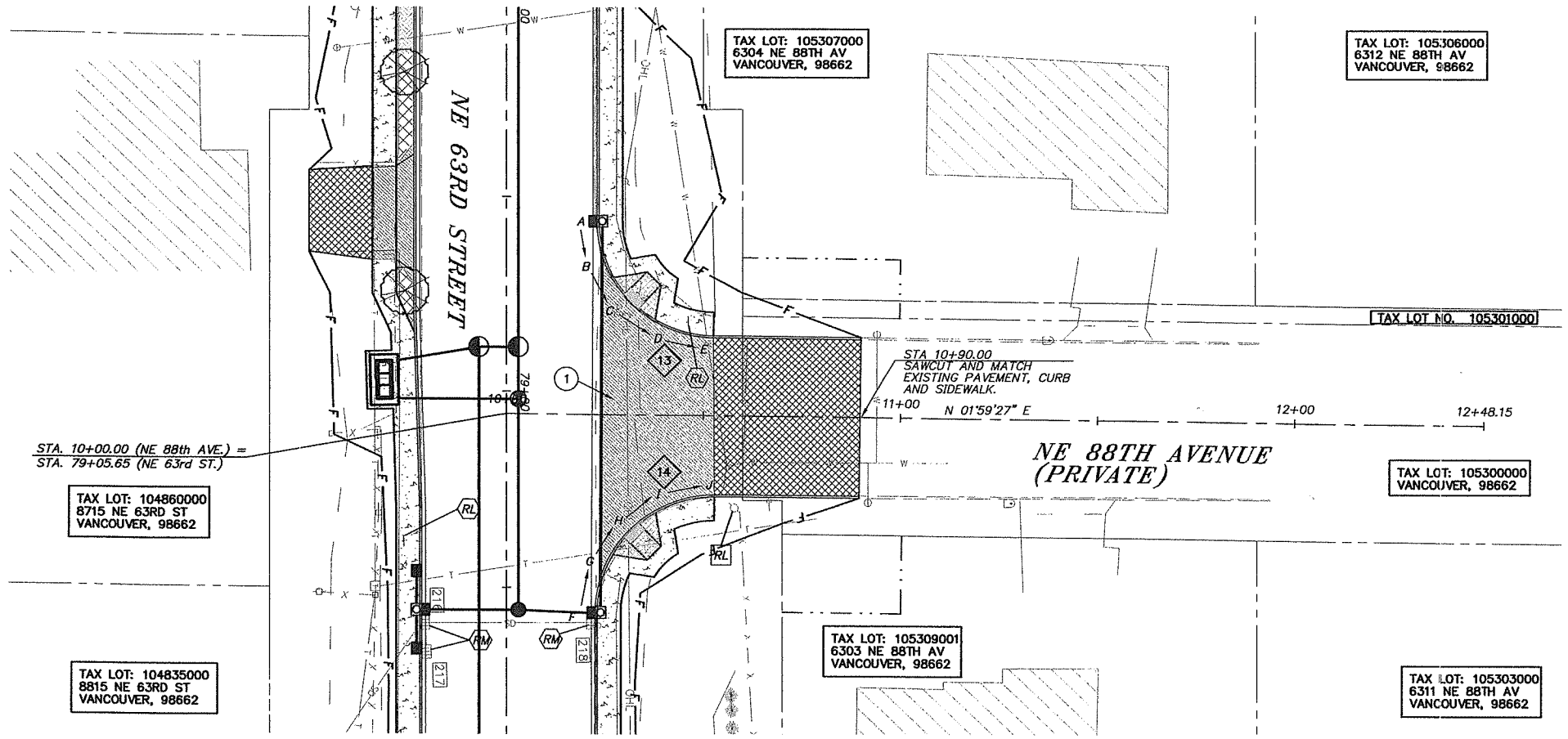

SCALE IN FEET

20 0 20 40

CURB RETURN TABLE

CURVE	STATION/OFFSET	SYMBOL Δ/4	T.O.C. ELEV.
13	BCR 78+56.38	A	256.01
	23.00' LT	B	255.72
Δ = 89°16'43"		C	255.42
R = 30.00'	ECR 78+86.38	D	255.21
L = 46.75'	52.61' LT	E	254.57
14	BCR 79+56.47	F	255.37
	22.50' LT	G	255.00
Δ =90°34'50"		H	254.85
R = 30.00'	ECR 79+26.47	I	254.70
L = 47.43'	52.81' LT	J	254.57

CONSTRUCTION NOTES

1. CONSTRUCT COMMERCIAL CONCRETE DRIVEWAY APPROACH PER CLARK COUNTY STD. PLAN NO. F17 ON SHEET D02.

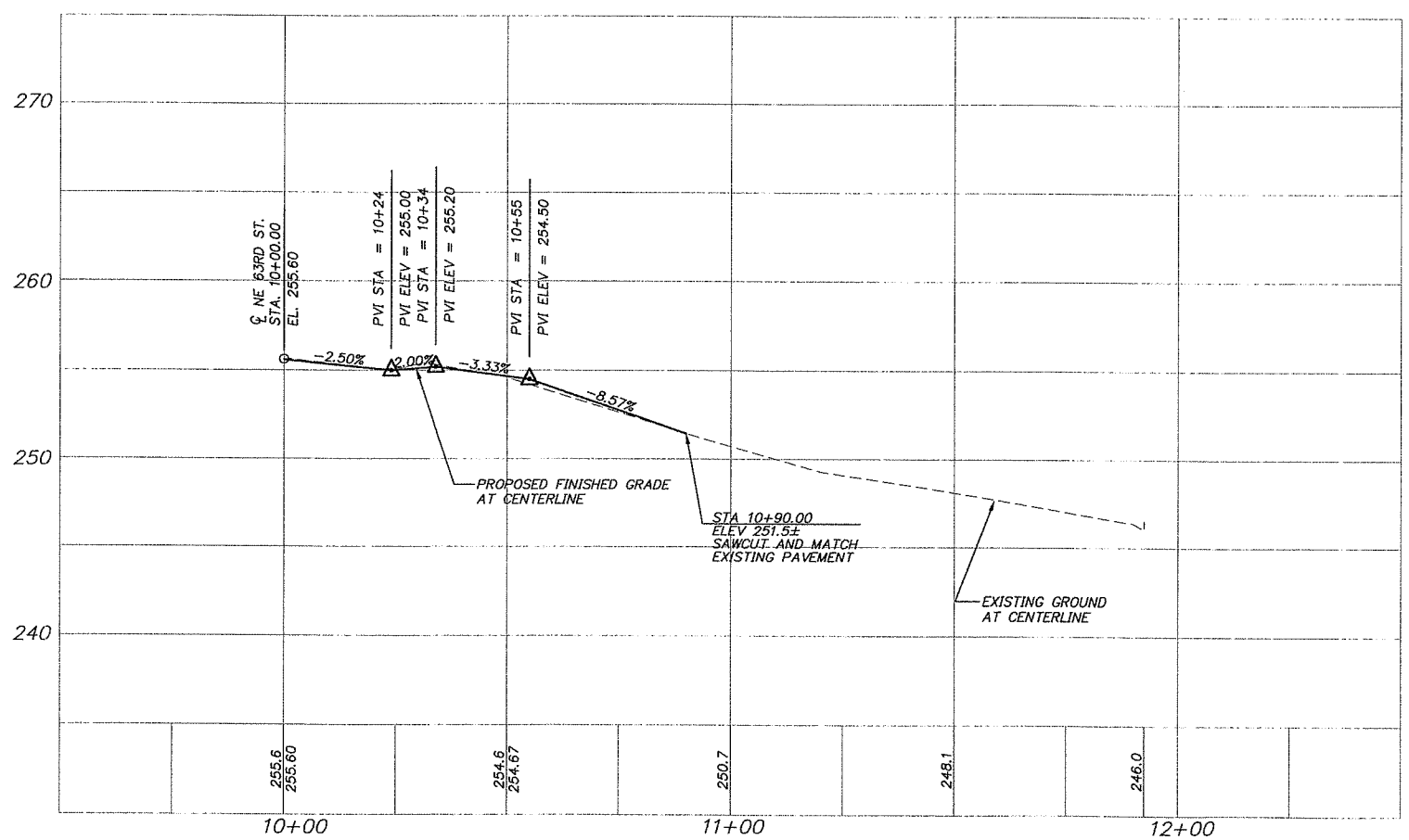

OBJECT TO BE:

REMOVED	= RM
RELOCATED	= RL
ABANDONED	= AB
REPLACED & RELOCATED	= RP
RELOCATED & ADJUSTED TO GRADE	= RA
ADJUSTED TO GRADE	= AD
TRIMMED	= T

BY: ⬡ CONTRACTOR ◯ CITY/COUNTY FORCES ☐ OTHERS

NOT FOR CONSTRUCTION

DESIGNED: SLW
DRAWN: JRM
CRP: 330422
HORIZ. 1" = 20'
VERT. 1" = 5'
DATE: 8/27/2004
DWG: 105
SHEET 49 OF 81

CALL 48 HOURS BEFORE YOU DIG 1-800-424-5555 "It's the Law" NORTHWEST UTILITIES NOTIFICATION CENTER

STATE OF WASHINGTON PAMELA K. L. WEDEMANN 22446 REGISTERED PROFESSIONAL ENGINEER EXPIRES 9/09/2005

otak Incorporated
700 Washington St. Suite 401
Vancouver, WA 98660
Phone: (360) 737-9613
FAX: (360) 737-9651

DESIGN & ENGINEERING DIVISION
NE 63RD STREET IMPROVEMENTS

PLAN AND PROFILE
NE 88TH AVENUE

proud past, promising future
CLARK COUNTY WASHINGTON

V: SHERYL 05/27/04 5:20pm --> V:\PROJECT\11900\11944\DWG\C944S045.DWG

V: SHERYL 08/24/04 7:23pm --> V:\PROJECT\11900\11944\DWG\C944S047.DWG

XREF LIST
Xscale: 20
Resolved
3944x001_border
3944x500
3944x510
3944x700
3KW WASH
3944b104
3944b106
3944b200

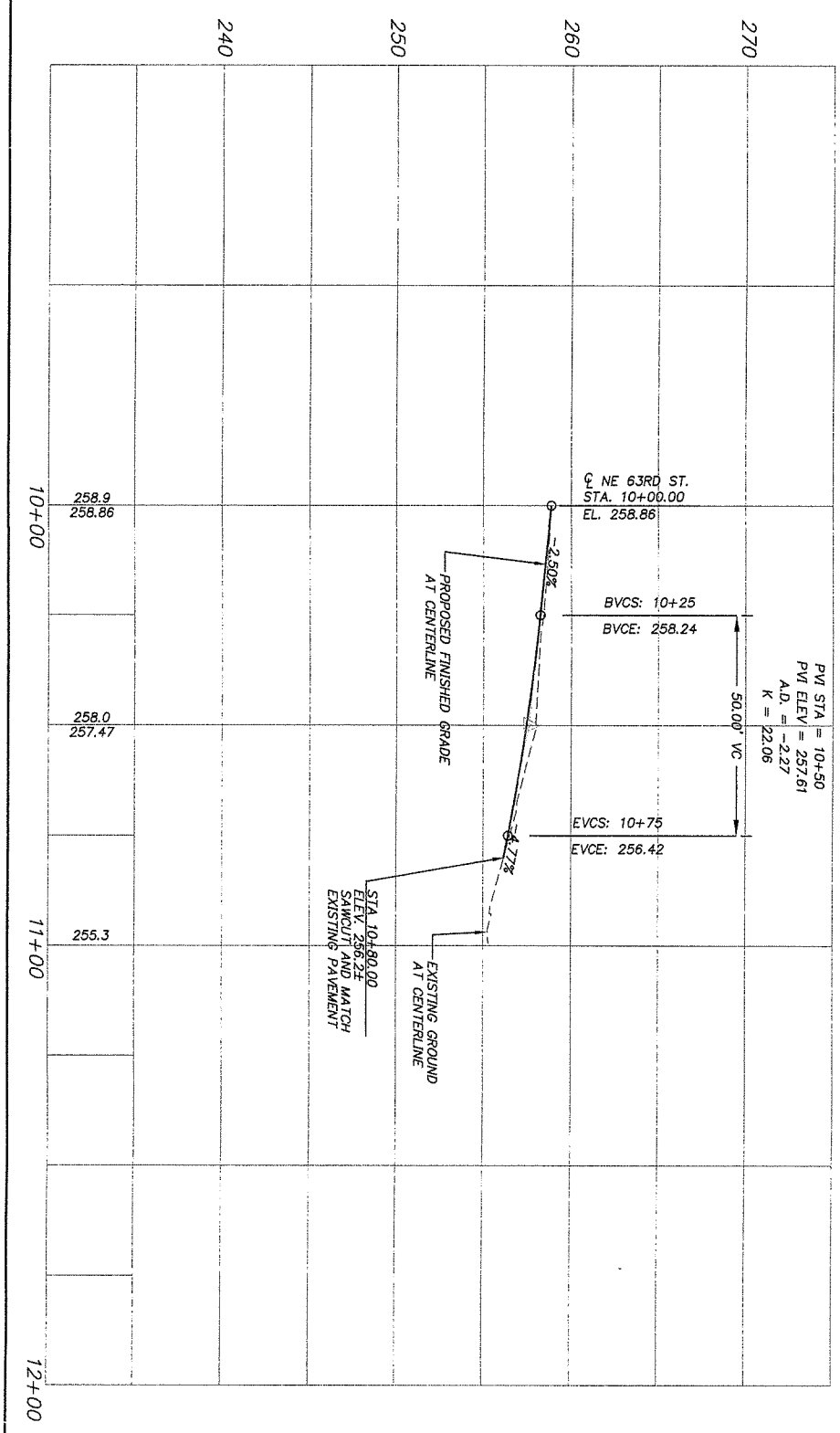

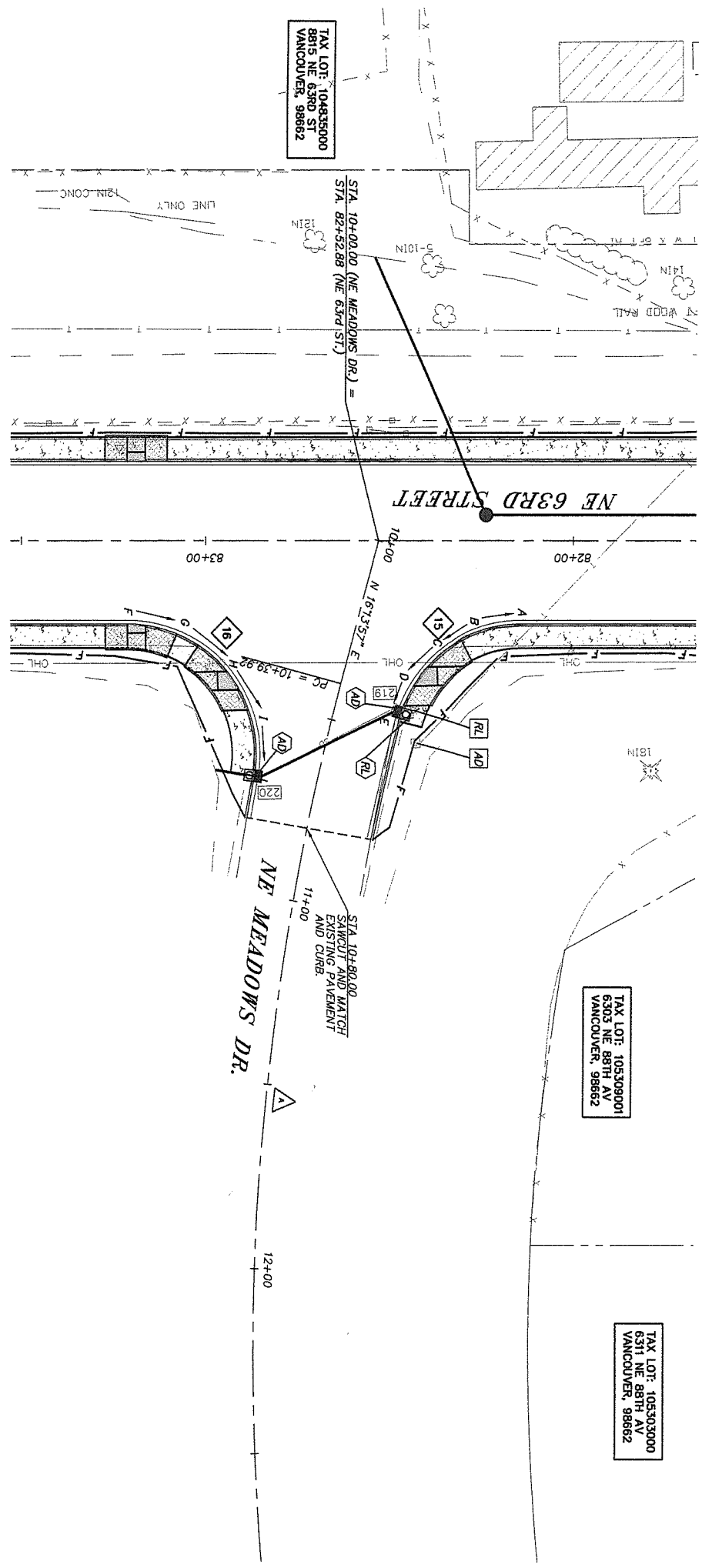

CURB RETURN TABLE

CURVE	STATION/OFFSET	SYMBOL Δ/4	T.O.C. ELEV.
15	BCR 82+13+74 22.50' LT	A	258.36
Δ = 75°29'10"		B	258.42
R = 35.00'		C	258.32
L = 46.11'	ECR 82+47.63 48.73' LT	D	258.06
		E	257.67
16	BCR 83+21.32 22.50' LT	F	259.23
Δ = 99°50'41"		G	258.83
R = 35.00'		H	258.14
L = 60.99'	ECR 82+86.83 63.48' LT	I	257.45
		J	256.76

CENTERLINE CURVE TABLE

A	Δ = 37°59'21"
	R = 700.00'
	L = 464.13'

SCALE IN FEET
20 0 20 40

OBJECT TO BE:
REMOVED = RM
RELOCATED = RL
ABANDONED = AB
REPLACED & RELOCATED = RP
RELOCATED & ADJUSTED TO GRADE = RA
ADJUSTED TO GRADE = AD
TRIMMED = T

BY: CONTRACTOR; CITY/COUNTY FORCES; OTHERS

NOT FOR CONSTRUCTION

proud past, promising future
CLARK COUNTY
WASHINGTON

DESIGN & ENGINEERING DIVISION
NE 63RD STREET IMPROVEMENTS

PLAN AND PROFILE
NE MEADOWS DRIVE

otak Incorporated
700 Washington St., Suite 401
Vancouver, WA 98660
Phone: (360) 737-9613
FAX: (360) 737-9651

PAMELA KIEL WIEDEMANN
STATE OF WASHINGTON
22440
REGISTERED PROFESSIONAL ENGINEER
EXPIRES AUG. 31, 2005

CALL 48 HOURS BEFORE YOU DIG
1-800-424-5555
"It's the Law"
NORTHWEST UTILITIES NOTIFICATION CENTER

DESIGNED:	SLW
DRAWN:	JRM
CRP:	330422
HORIZ.	1" = 20'
VERT.	1" = 5'
DATE:	8/27/2004
DWG:	106
SHEET	50 OF 81

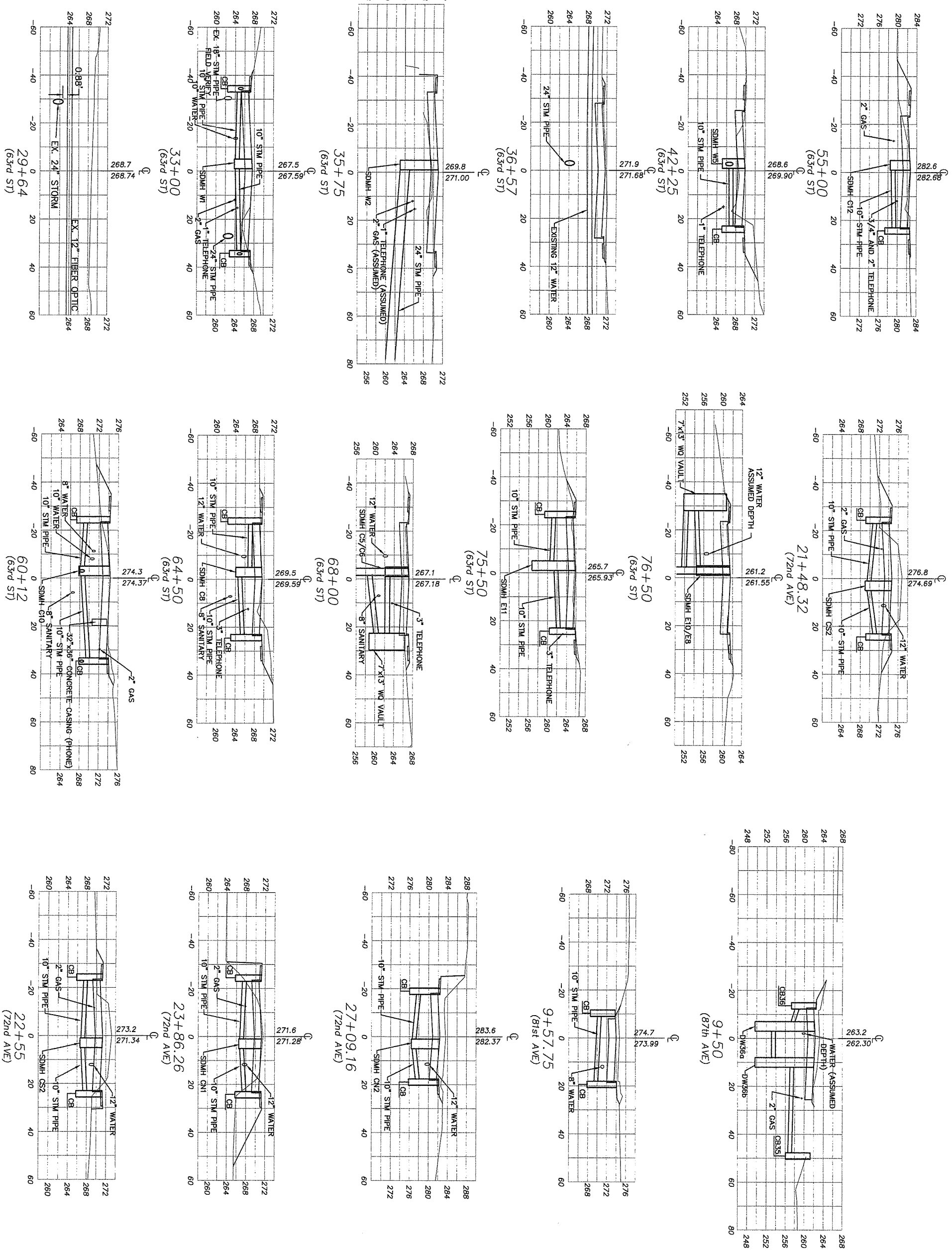

NOT FOR CONSTRUCTION

proud past, promising future

CLARK COUNTY
WASHINGTON

DESIGN & ENGINEERING DIVISION
NE 63RD STREET IMPROVEMENTS

POTHOLE DATA CROSS SECTIONS

otak Incorporated
700 Washington St., Suite 401
Vancouver, WA 98660
Phone: (360) 737-9613
FAX: (360) 737-9651

PAMELA KIEL WIEDEMANN
STATE OF WASHINGTON
22440
REGISTERED PROFESSIONAL ENGINEER
EXPIRES: AUG. 31, 2005

CALL 48 HOURS BEFORE YOU DIG
1-800-424-5555
"It's the Law"
NORTHWEST UTILITIES NOTIFICATION CENTER

DESIGNED:	PKW
DRAWN:	GME
CRP:	330422
HORIZ.	1" = 20'
VERT.	1" = 10'
DATE:	8/27/2004
DWG:	PH01
SHEET	51 OF 81

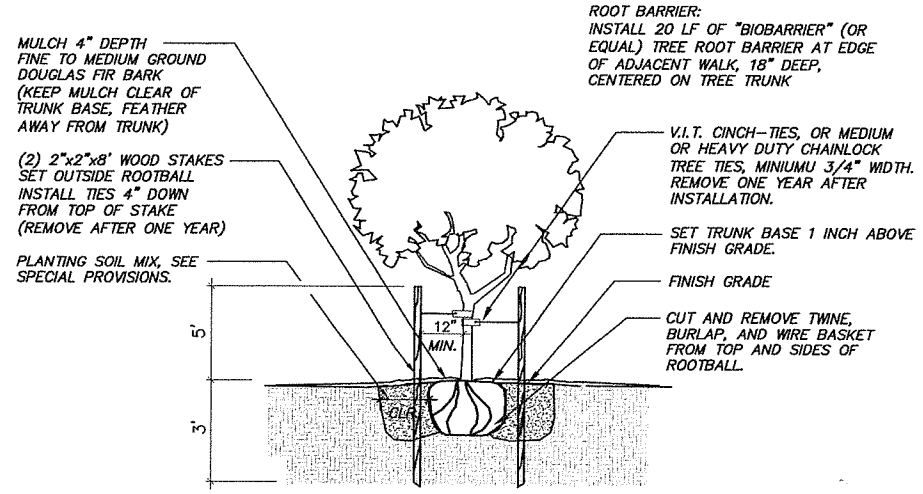

TREE STAKING DETAIL

(NOT TO SCALE)

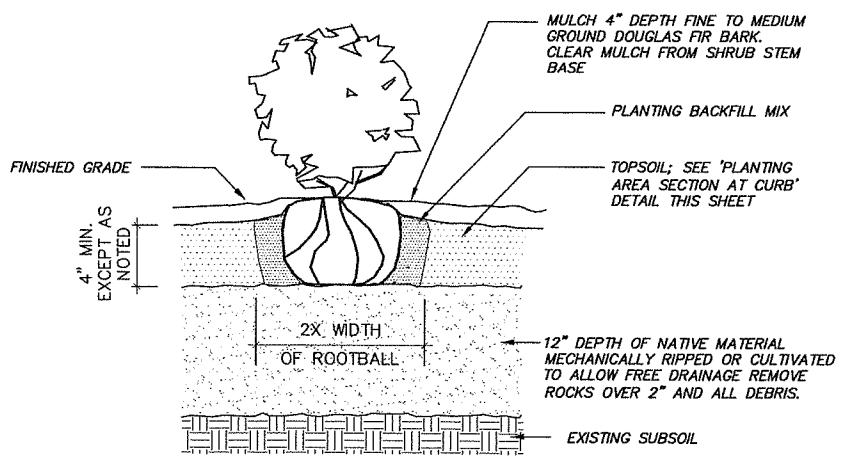

SHRUB & GROUND COVER PLANTING DETAIL

(NOT TO SCALE)

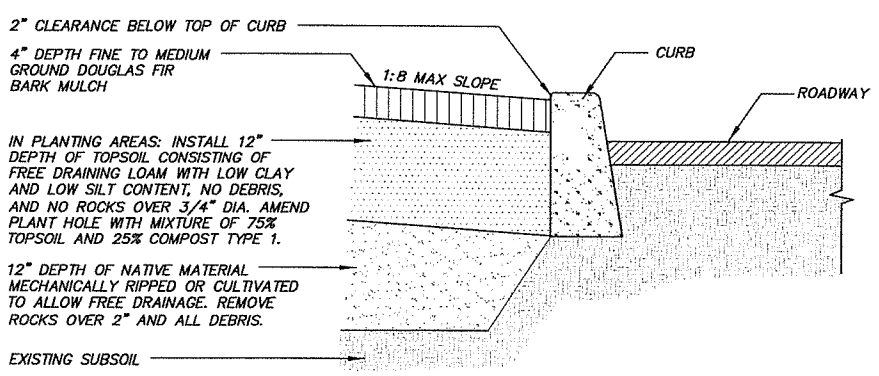

PLANTING AREA SECTION AT CURB

(NOT TO SCALE)

PLANT MATERIAL LEGEND

SYMBOL	QTY (TOTAL ALL SHTS)	COMMON NAME	BOTANICAL NAME	SPACING	SIZE AND DESCRIPTION
TREES					
	45	PAPERBARK MAPLE	ACER GRISEUM	30' O.C. OR AS SHOWN	2" CALIPER
	80	AMERICAN HORNBEAM	CARPINUS CAROLINIANA	30' O.C. OR AS SHOWN	2" CALIPER
SHRUBS AND GROUNDCOVERS					
	210	MOONLIGHT BROOM	CYTISUS SCOPARIUS 'MOONLIGHT'	36 IN. O.C.	2 GALLON
	1,200	KINNIKINNICK	ARCOSTAPHYLOS UVA-URSI 'MASSACHUSETTS'	30 IN. O.C. 2 STAGGERED ROWS	1 GALLON
	1,470	ORCHID ROCKROSE	CISTUS PURPUREOUS	30 IN. O.C. 2 STAGGERED ROWS	1 GALLON

PLANTING NOTES

1. TREES IN PLANTING STRIPS TO BE CENTERED IN PLANTER WITH SPACING SHOWN ON PLAN.
2. INSTALL STREET TREES PER TREE STAKING DETAIL.
3. LEAVE PLANT NAME IDENTIFICATION TAGS ON TEN PERCENT OF ALL TREES AND SHRUBS INSTALLED TO AID COUNTY INSPECTORS IN VERIFYING THAT SPECIFIED PLANTS HAVE BEEN INSTALLED.
4. PLANT CENTER OF SHRUBS A MINIMUM OF 24 INCHES FROM STREET CURBS. PLANT CENTER OF GROUND COVERS A MINIMUM OF 18" FROM STREET CURBS.
5. INSTALL 4-INCH MIN. DEPTH OF MEDIUM FIR BARK MULCH LAYER OVER ALL PLANTING AREAS AFTER INSTALLATION OF TREES AND GROUND COVERS.

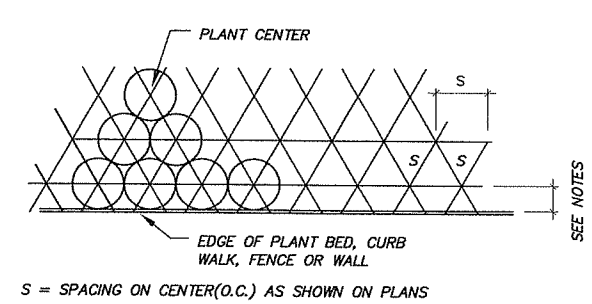

TRIANGULAR PLANT SPACING

(NOT TO SCALE)

NOT FOR CONSTRUCTION

DESIGN & ENGINEERING DIVISION
NE 63RD STREET IMPROVEMENTS

LANDSCAPE DETAILS AND NOTES

DESIGNED: SLW
DRAWN: SLN
CRP: 330422
HORIZ: NA
VERT: NA
DATE: 8/27/2004
DWG: L01
SHEET 52 OF 81

CALL 48 HOURS BEFORE YOU DIG 1-800-424-5555 "It's the Law" NORTHWEST UTILITIES NOTIFICATION CENTER

STATE OF WASHINGTON REGISTERED LANDSCAPE ARCHITECT
DAVID D. HAYNES CERTIFICATE NO. 824

otak Incorporated
700 Washington St. Suite 401
Vancouver, WA 98660
Phone: (360) 737-9613
FAX: (360) 737-9631

proud past, promising future
CLARK COUNTY WASHINGTON

F_LIST
ale: 1
ived
4x001_border
1x700
WASH

V: JOHNMA 08/26/04 3:54pm --> R:\DWG\C9445049.DWG

WIRING SCHEDULE

RUN NO. △	ENCLOSURE OR ATTACHMENT	TRAFFIC SIGNALS	PEDESTRIAN SIGNALS	DETECTION		ILLUMINATION		PREEMPTION		SIGNAL SYSTEM POWER	COORDI-NATION	WIRED SPARES	RUN NO. △
				INDUCTIVE LOOPS	PEDESTRIAN	POWER	BRANCH	OPTICAL	HARD WIRE				
1	SAW-CUT			2#12 TP									1
2	SAW-CUT			4#12 TP									2
3	SIGNAL MAST ARM	1-5/cc											3
4	SIGNAL MAST ARM	1-5/cc						1#20-3cc/s					4
5	SIGNAL MAST ARM	2-5/cc											5
6	SIGNAL MAST ARM	2-5/cc						1#20-3cc/s					6
7	SIGNAL MAST ARM	3-5/cc						1#20-3cc/s					7
8	ILLUM. MAST ARM					2#10 PB							8
9	1" PVC			1#18-4cc/s									9
10	1" PVC							1#20-3cc/s					10
11	2" PVC			1#18-4cc/s							1#18-4cc/s		11
12	1" PVC			2#12 TP									12
13	1" PVC			2#18-4cc/s									13
14	1-1/2" RM									2#4			14
15	1" PVC							1#20-3cc/s	1#18-4cc/s		1#18-4cc/s		15
16	2" PVC			1#18-4cc/s				1#20-3cc/s	1#18-4cc/s		1#18-4cc/s		16
17	2" PVC			2#18-4cc/s					1#18-4cc/s		1#18-4cc/s		17
18	2" PVC			3#18-4cc/s							1#18-4cc/s		18
19	1" PVC			4#12 TP									19
20	1" PVC			6#12 TP									20
21	2" PVC			5#18-4cc/s					1#18-4cc/s		1#18-4cc/s		21
22	2" PVC			6#18-4cc/s							1#18-4cc/s	-	22
23	1-¼" PVC			8#12 TP									23
24	1-½" PVC			10#12 TP									24
25	1-½" PVC			12#12 TP									25
26	2" RM	1-5/cc	1-5/cc		1#18-4cc/s		2#12	1#20-3cc/s				1-5/cc & 2#12	26
27	2" RM	1-5/cc	1-5/cc		1#18-4cc/s	2#10	1#12	1#20-3cc/s				1-5/cc & 2#12	27
28	2" RM	2-5/cc	1-5/cc		1#18-4cc/s		2#12	1#20-3cc/s				4#12	28
29	2" RM	1-5/cc	1-5/cc	3#18-4cc/s	1#18-4cc/s		2#12	1#20-3cc/s				1-5/cc & 2#12	29
30	2-½" RM	2-5/cc	1-5/cc	10#18-4cc/s	1#18-4cc/s		2#12	1#20-3cc/s			1#18-4cc/s	4#12	30
31	3" RM	3-5/cc	2-5/cc	4#18-4cc/s	2#18-4cc/s		4#12	3#20-3cc/s	1#18-4cc/s		1#18-4cc/s	1-5/cc & 6#12	31
32	4" RM	5-5/cc	3-5/cc	17#18-4cc/s	3#18-4cc/s		6#12	4#20-3cc/s	1#18-4cc/s		2#18-4cc/s	1-5/cc & 10#12	32

WIRING SCHEDULE LEGEND:

PB = Pole and Bracket cable
TP = Twisted Pair(s) of #12 AWG Type USE inductive loop wires
RM = Rigid Metal conduit
6pr/s = Six twisted pairs of commumication cable with aluminum shield and high-density polyethylene jacket
5/cc = Five-conductor traffic signal display cable
4cc/s = Four-conductor communication cable having stranded copper conductors, aluminum/polyester foil shield, and high-density polyethylene jacket

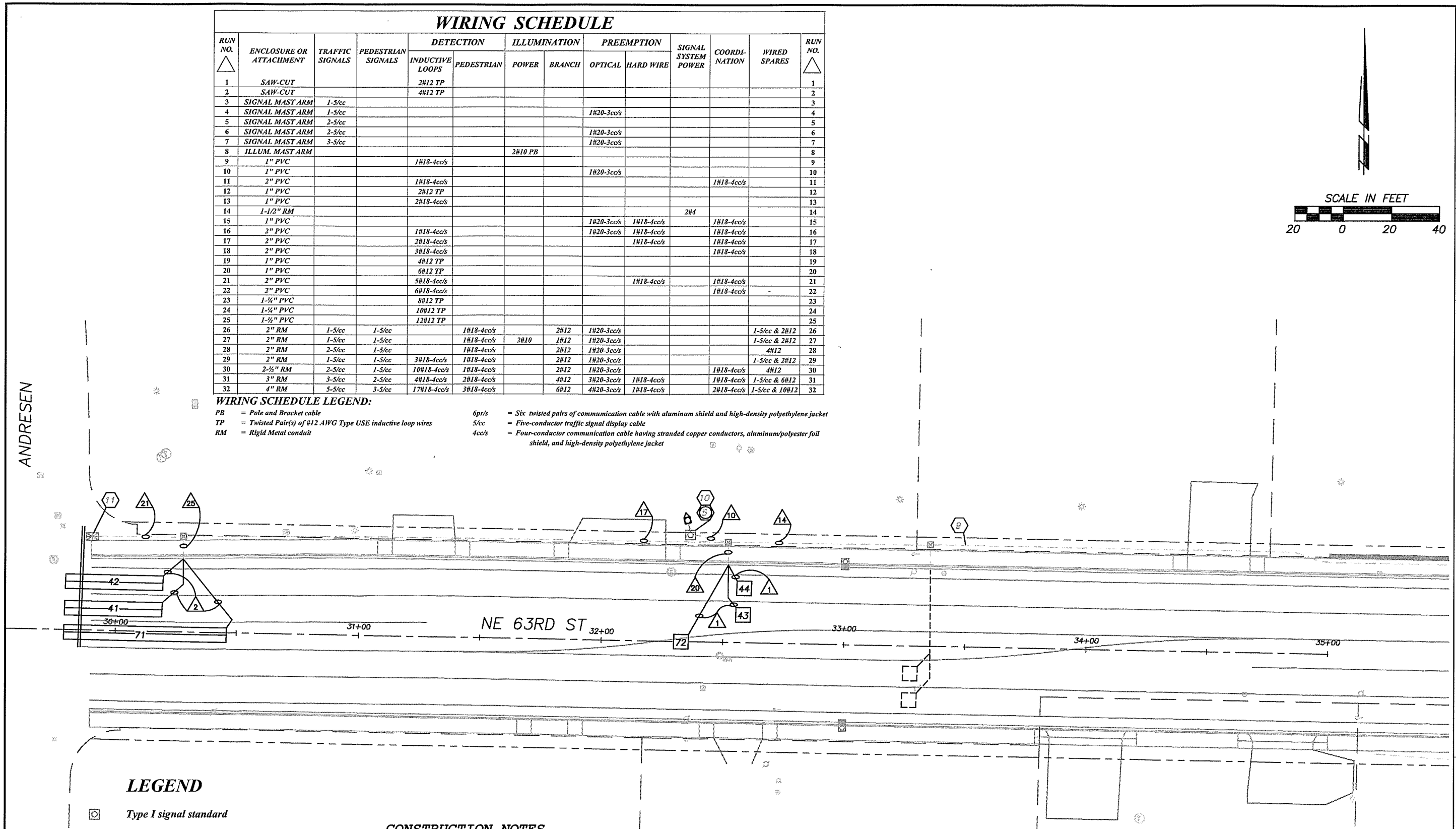

LEGEND

- Type I signal standard
- Type 1 electrical junction box
- optical preemption detector
- rigid polyvinyl chloride (PVC) conduit
- existing right-of-way
- signal standard number
- construction note
- wire note

CONSTRUCTION NOTES

(9) Conduit and cables continue to the traffic signal at NE 72nd Avenue. See Traffic Signal Plan.

(10) At approximate Sta. NE 63RD STREET 32+36 (44' Lt.) install Type I signal standard (5) complete with optical preemption detector attached to the slipfitter on the top of the pole. The optical telescopes are to be aimed at the doors for the fire engines.

(11) Run 2" PVC conduit and cables into existing controller cabinet and connect them to the terminals as identified by the traffic engineer. The existing traffic signal controller shall be upgraded to the standard specified for the new traffic signal installation at the intersection on NE 63rd Street and NE 72nd Avenue.

DETECTION SYSTEM NOTES

All vehicle detection inductive loops shall conform to the following:

INDUCTIVE LOOP(S)	TYPE OF LOOP	SIZE (W x L)	# OF TURNS	DISTANCE (NEAR-FAR) FROM STOP BAR ON THE APPROACH
72	SQUARE	6′ x 6′	4	244′ TO 250′
43, 44	SQUARE	6′ x 6′	4	269′ TO 275′
41, 42	RECTANGULAR COUPLED	(3′+ 3′) X 40′	2 & 2	-7′ TO 33′
71	RECTANGULAR COUPLED	(3′+ 3′) X 60′	2 & 2	-7′ TO 53′

DESIGNED EB
DRAWN KB
CRP 330422
HOR. 1"=20'
VERT. NA
DATE 6/2/04
DWG: T01
SHEET 53 OF 81

CALL 48 HOURS BEFORE YOU DIG
1-800-553-4344
"It's the Law"
NORTHWEST UTILITIES NOTIFICATION CENTER

STATE OF WASHINGTON
EUGENE S. BERGETH
REGISTERED PROFESSIONAL ENGINEER
15227
EXPIRES JULY 17, 2005

DESIGN & ENGINEERING DIVISION
DESIGN SECTION

NE 63RD STREET AT NE ANDRESEN ROAD
TRAFFIC SIGNAL DETECTOR REPLACEMENT AND INTERCONNECT

proud past, promising future
CLARK COUNTY WASHINGTON

N:\CIP\PROJECTS\330422-NE63rdStreet\DESIGN\DWGS\signals\ne63sigbase.dwg, Layout1 (1), 8/31/2004 3:18:19 PM, begleyk

SIGNAL HEAD DISPLAYS

HEADS 11/61 and 21/51

HEADS 21, 22, 41, 42, 61, 62, 81, and 82

HEADS 28, 29, 48, 49, 68, 69, 88, and 89

NOTES:

1. Traffic signal heads shall have 12" sections, square doors, backplates, Type M mounts, and tunnel visors. All sections shall have Light Emitting Diode (LED) modules.

2. Pedestrian signal heads are 16"(H) x 19¾"(W) x 10½"(D) units having solid-filled LED "HAND" and LED "WALKER" messages having a two (2) digit, seven (7) segment numerical count down display, Z-crate visors, and Type E mounts.

SCALE IN FEET

20 0 20 40

T. 2 N., R. 2 E., W. M.

PHASE SEQUENCE DIAGRAM

#1 #2 #3 #4

#5 #6 #7 #8

= protected left turn movement

= permissive left turn movement

DETECTION RACK

MODULE NO. / MODULE TYPE / CHANNEL	1 PWR. SUPPLY	2 VEHICLE	3 VEHICLE	4 VEHICLE	5 VEHICLE	6 VEHICLE	7 VEHICLE	8 VEHICLE	9 VEHICLE	10 PREEMPT.
1	MODULES 2&3	21/51	24	11/61	64	22	41	81	SPARE	NORTH-BOUND
2	MODULES 4&5	14	25	54	(65)	23	42	82	SPARE	SOUTH-BOUND
3	MODULES 6&7	52	26	12	66	62	43	83	SPARE	EAST-BOUND
4	MODULES 8&9	53	27	13	(67)	(63)	44	84	SPARE	WEST-BOUND

(xx)=FUTURE SENSOR

common home-run cable (4cc/s)

WIRING SCHEDULE

RUN NO.	ENCLOSURE OR ATTACHMENT	TRAFFIC SIGNALS	PEDESTRIAN SIGNALS	DETECTION: INDUCTIVE LOOPS	DETECTION: PEDESTRIAN	ILLUMINATION: POWER	ILLUMINATION: BRANCH	PREEMPTION: OPTICAL	PREEMPTION: HARD WIRE	SIGNAL SYSTEM POWER	COORDI-NATION	WIRED SPARES	RUN NO.
1	SAW-CUT			2#12 TP									1
2	SAW-CUT			4#12 TP									2
3	SIGNAL MAST ARM	1-5/cc											3
4	SIGNAL MAST ARM	1-5/cc						1#20-3cc/s					4
5	SIGNAL MAST ARM	2-5/cc											5
6	SIGNAL MAST ARM	2-5/cc						1#20-3cc/s					6
7	SIGNAL MAST ARM	3-5/cc						1#20-3cc/s					7
8	ILLUM. MAST ARM					2#10 PB							8
9	1" PVC			1#18-4cc/s									9
10	1" PVC							1#20-3cc/s					10
11	2" PVC			1#18-4cc/s							1#18-4cc/s		11
12	1" PVC			2#12 TP									12
13	1" PVC			2#18-4cc/s									13
14	1-1/2" RM									2#4			14
15	1" PVC							1#20-3cc/s	1#18-4cc/s		1#18-4cc/s		15
16	2" PVC			1#18-4cc/s				1#20-3cc/s	1#18-4cc/s		1#18-4cc/s		16
17	2" PVC			2#18-4cc/s					1#18-4cc/s		1#18-4cc/s		17
18	2" PVC			3#18-4cc/s							1#18-4cc/s		18
19	1" PVC			4#12 TP									19
20	1" PVC			6#12 TP									20
21	2" PVC			5#18-4cc/s					1#18-4cc/s		1#18-4cc/s		21
22	2" PVC			6#18-4cc/s							1#18-4cc/s		22
23	1-¼" PVC			8#12 TP									23
24	1-¼" PVC			10#12 TP									24
25	1-½" PVC			12#12 TP									25
26	2" RM	1-5/cc	1-5/cc		1#18-4cc/s		2#12	1#20-3cc/s				1-5/cc & 2#12	26
27	2" RM	1-5/cc	1-5/cc		1#18-4cc/s	2#10	1#12	1#20-3cc/s				1-5/cc & 2#12	27
28	2" RM	2-5/cc	1-5/cc		1#18-4cc/s		2#12	1#20-3cc/s				4#12	28
29	2" RM	1-5/cc	1-5/cc	3#18-4cc/s	1#18-4cc/s		2#12	1#20-3cc/s				1-5/cc & 2#12	29
30	2-½" RM	2-5/cc	1-5/cc	10#18-4cc/s	1#18-4cc/s		2#12	1#20-3cc/s			1#18-4cc/s	4#12	30
31	3" RM	3-5/cc	2-5/cc	4#18-4cc/s	2#18-4cc/s		4#12	3#20-3cc/s	1#18-4cc/s		1#18-4cc/s	1-5/cc & 6#12	31
32	4" RM	5-5/cc	3-5/cc	17#18-4cc/s	3#18-4cc/s		6#12	4#20-3cc/s	1#18-4cc/s		2#18-4cc/s	1-5/cc & 10#12	32

WIRING SCHEDULE LEGEND:

PB = Pole and Bracket cable

TP = Twisted Pair(s) of #12 AWG Type USE inductive loop wires

RM = Rigid Metal conduit

6pr/s = Six twisted pairs of commumication cable with aluminum shield and high-density polyethylene jacket

5/cc = Five-conductor traffic signal display cable

4cc/s = Four-conductor communication cable having stranded copper conductors, aluminum/polyester foil shield, and high-density polyethylene jacket

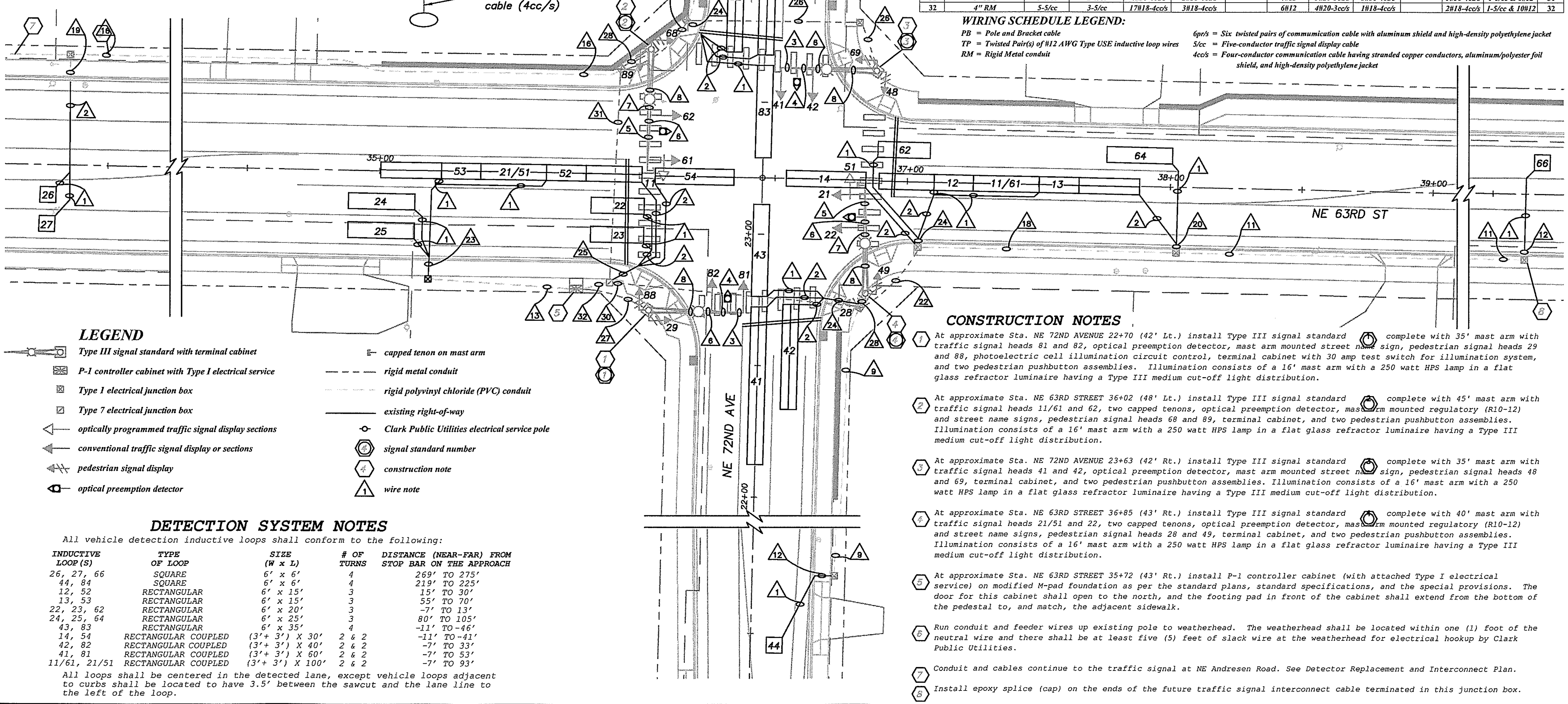

LEGEND

Type III signal standard with terminal cabinet

P-1 controller cabinet with Type I electrical service

Type I electrical junction box

Type 7 electrical junction box

optically programmed traffic signal display sections

conventional traffic signal display or sections

pedestrian signal display

optical preemption detector

capped tenon on mast arm

rigid metal conduit

rigid polyvinyl chloride (PVC) conduit

existing right-of-way

Clark Public Utilities electrical service pole

signal standard number

construction note

wire note

DETECTION SYSTEM NOTES

All vehicle detection inductive loops shall conform to the following:

INDUCTIVE LOOP (S)	TYPE OF LOOP	SIZE (W x L)	# OF TURNS	DISTANCE (NEAR-FAR) FROM STOP BAR ON THE APPROACH
26, 27, 66	SQUARE	6' x 6'	4	269' TO 275'
44, 84	SQUARE	6' x 6'	4	219' TO 225'
12, 52	RECTANGULAR	6' x 15'	3	15' TO 30'
13, 53	RECTANGULAR	6' x 15'	3	55' TO 70'
22, 23, 62	RECTANGULAR	6' x 20'	3	-7' TO 13'
24, 25, 64	RECTANGULAR	6' x 25'	3	80' TO 105'
43, 83	RECTANGULAR	6' x 35'	4	-11' TO -46'
14, 54	RECTANGULAR COUPLED	(3'+ 3') X 30'	2 & 2	-11' TO -41'
42, 82	RECTANGULAR COUPLED	(3'+ 3') X 40'	2 & 2	-7' TO 33'
41, 81	RECTANGULAR COUPLED	(3'+ 3') X 60'	2 & 2	-7' TO 53'
11/61, 21/51	RECTANGULAR COUPLED	(3'+ 3') X 100'	2 & 2	-7' TO 93'

All loops shall be centered in the detected lane, except vehicle loops adjacent to curbs shall be located to have 3.5' between the sawcut and the lane line to the left of the loop.

CONSTRUCTION NOTES

1. At approximate Sta. NE 72ND AVENUE 22+70 (42' Lt.) install Type III signal standard (1) complete with 35' mast arm with traffic signal heads 81 and 82, optical preemption detector, mast arm mounted street name sign, pedestrian signal heads 29 and 88, photoelectric cell illumination circuit control, terminal cabinet with 30 amp test switch for illumination system, and two pedestrian pushbutton assemblies. Illumination consists of a 16' mast arm with a 250 watt HPS lamp in a flat glass refractor luminaire having a Type III medium cut-off light distribution.

2. At approximate Sta. NE 63RD STREET 36+02 (48' Lt.) install Type III signal standard (2) complete with 45' mast arm with traffic signal heads 11/61 and 62, two capped tenons, optical preemption detector, mast arm mounted regulatory (R10-12) and street name signs, pedestrian signal heads 68 and 89, terminal cabinet, and two pedestrian pushbutton assemblies. Illumination consists of a 16' mast arm with a 250 watt HPS lamp in a flat glass refractor luminaire having a Type III medium cut-off light distribution.

3. At approximate Sta. NE 72ND AVENUE 23+63 (42' Rt.) install Type III signal standard (3) complete with 35' mast arm with traffic signal heads 41 and 42, optical preemption detector, mast arm mounted street name sign, pedestrian signal heads 48 and 69, terminal cabinet, and two pedestrian pushbutton assemblies. Illumination consists of a 16' mast arm with a 250 watt HPS lamp in a flat glass refractor luminaire having a Type III medium cut-off light distribution.

4. At approximate Sta. NE 63RD STREET 36+85 (43' Rt.) install Type III signal standard (4) complete with 40' mast arm with traffic signal heads 21/51 and 22, two capped tenons, optical preemption detector, mast arm mounted regulatory (R10-12) and street name signs, pedestrian signal heads 28 and 49, terminal cabinet, and two pedestrian pushbutton assemblies. Illumination consists of a 16' mast arm with a 250 watt HPS lamp in a flat glass refractor luminaire having a Type III medium cut-off light distribution.

5. At approximate Sta. NE 63RD STREET 35+72 (43' Rt.) install P-1 controller cabinet (with attached Type I electrical service) on modified M-pad foundation as per the standard plans, standard specifications, and the special provisions. The door for this cabinet shall open to the north, and the footing pad in front of the cabinet shall extend from the bottom of the pedestal to, and match, the adjacent sidewalk.

6. Run conduit and feeder wires up existing pole to weatherhead. The weatherhead shall be located within one (1) foot of the neutral wire and there shall be at least five (5) feet of slack wire at the weatherhead for electrical hookup by Clark Public Utilities.

7. Conduit and cables continue to the traffic signal at NE Andresen Road. See Detector Replacement and Interconnect Plan.

8. Install epoxy splice (cap) on the ends of the future traffic signal interconnect cable terminated in this junction box.

DESIGN & ENGINEERING DIVISION
DESIGN SECTION

NE 63RD STREET AT NE 72ND AVENUE
TRAFFIC SIGNAL PLAN

CLARK COUNTY WASHINGTON — proud past, promising future

EUGENE S. BERBETH, STATE OF WASHINGTON, 18227, REGISTERED PROFESSIONAL ENGINEER, EXPIRES AUG 17, 2005

CALL 48 HOURS BEFORE YOU DIG 1-800-553-4344 "It's the Law" NORTHWEST UTILITIES NOTIFICATION CENTER

DESIGNED	EB
DRAWN	KB
CRP	330422
HOR.	1"=20'
VERT.	NA
DATE	6/2/04
DWG:	T02
SHEET 54	OF 81

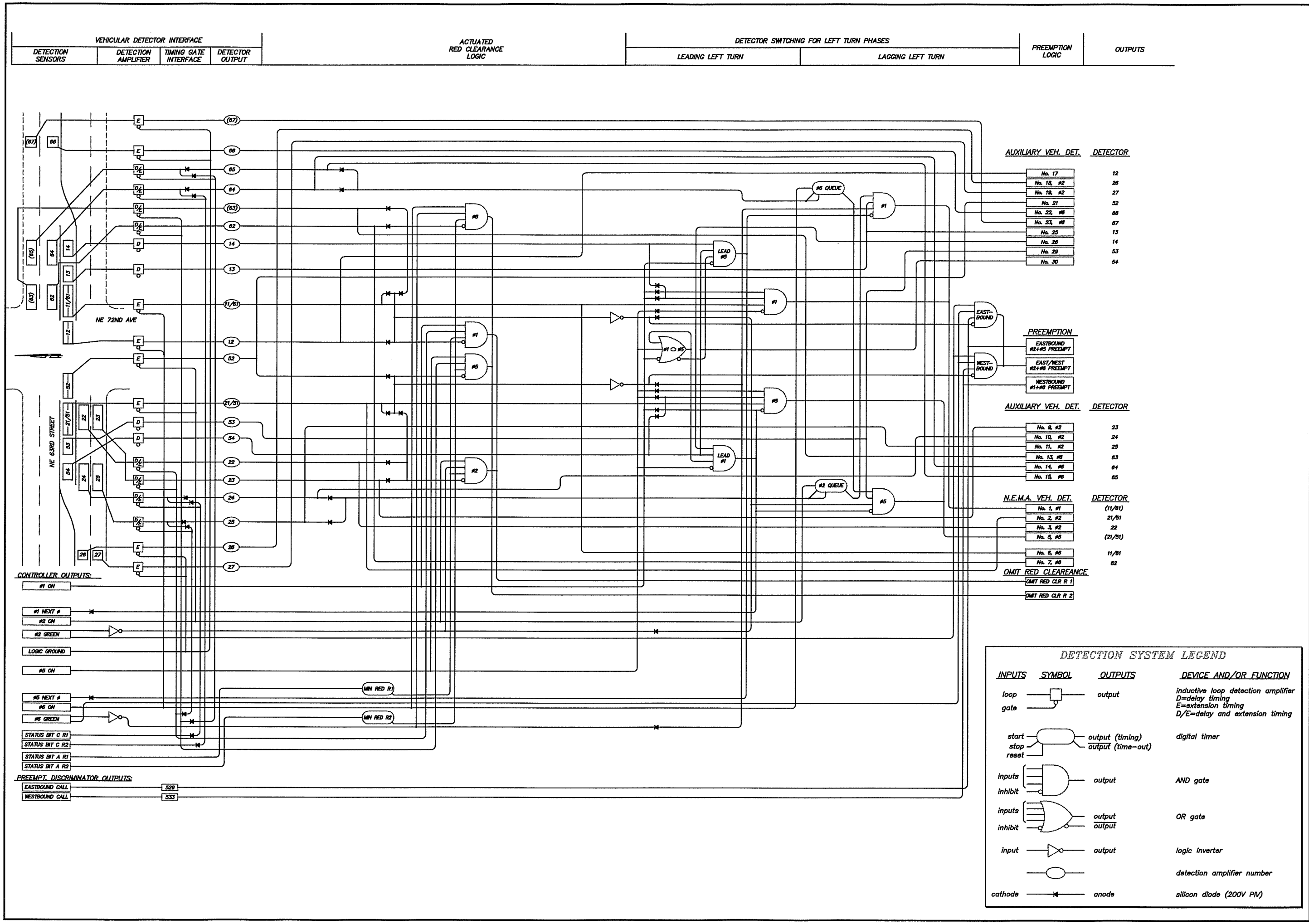

DESIGNED EB
DRAWN KB
CRP 330422
HOR. NA
VERT. NA
DATE 6/2/04
DWG: T03-
SHEET 55 OF 81

CALL 48 HOURS BEFORE YOU DIG
1-800-553-4344
"It's the Law"
NORTHWEST UTILITIES NOTIFICATION CENTER

STATE OF WASHINGTON
ERIC S. BERGETH
SENIOR ENGINEER
PROFESSIONAL ENGINEER
EXPIRES JULY 17, 2005

DESIGN & ENGINEERING DIVISION
DESIGN SECTION

NE 63RD STREET AT 72ND AVENUE
DETECTION LOGIC SCHEMATIC

proud past, promising future
CLARK COUNTY
WASHINGTON

N:\CIP\PROJECTS\330422-NE63rdStreet\DESIGN\DWGS\signals\ne63DLS.dwg, Layout1, 8/31/2004 3:19:16 PM, begleyk

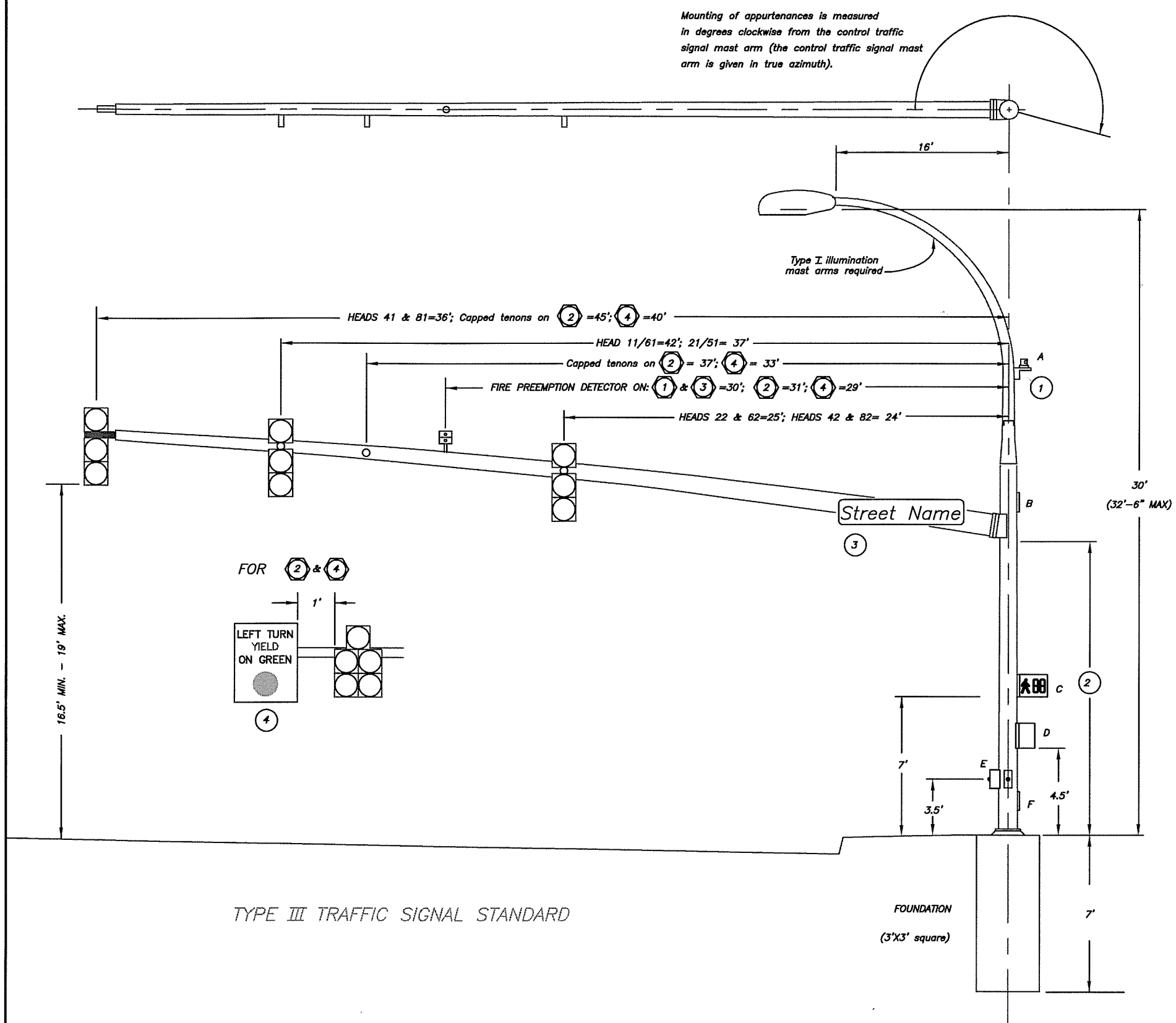

TYPE III TRAFFIC SIGNAL STANDARD

APPURTENANCE ORIENTATION				
SIGNAL STANDARD	1	2	3	4
SIGNAL MAST ARM	90°	180° T.A.	270° T.A.	0° T.A.
A	0°	0°	0°	0°
B	180°	180°	180°	180°
C	85°/178°	90°/185°	95°/182°	93°/175°
D	135°	135°	135°	135°
E	268°/355°	0°/274°	5°/272°	2°/264°
F	180°	180°	180°	180°

T.A.=True Azimuth
A=Illumination mast arm
B=Handhole
C=Pedestrian Signal Heads
D=Terminal Cabinet
E=Pedestrian Pushbuttons with Signs
F=Handhole

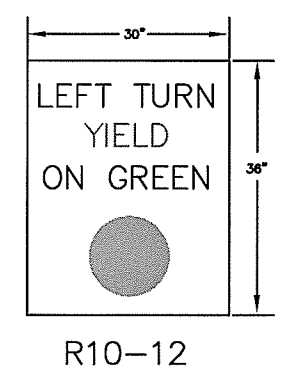

3 TRAFFIC SIGNAL SIGN DETAIL

Note: Sign face material shall be 3-M Diamond Grade VIP or approved equal.

NOTES:

1. Photoelectric cell illumination circuit control (Signal standard 1 only).
2. Mast arm attachment varies with manufacturer.
3. Street name and regulatory signs attached per standard plan J-6h. Street name signs are 18" series "C" black letters on Diamond Grade VIP reflectorized yellow background. Signs shall include borders, margins, and corner radii. Legends are as follows:
   1 & 3 = N.E. 63rd St.
   2 & 4 = N.E. 72nd Av.
4. Left turn yield on green ● sign per detail above.

DESIGNED	EB
DRAWN	KB
CRP	330422
HOR.	NA
VERT.	NA
DATE	6/2/04
DWG:	T04
SHEET 56	OF 81

CALL 48 HOURS BEFORE YOU DIG 1-800-553-4344 "It's the Law" NORTHWEST UTILITIES NOTIFICATION CENTER

EUGENE S. BERGER STATE OF WASHINGTON 19627 REGISTERED PROFESSIONAL ENGINEER EXPIRES JULY 1, 2005

DESIGN & ENGINEERING DIVISION
DESIGN SECTION

NE 63RD STREET AT NE 72ND AVENUE
SIGNAL STANDARD DETAILS

proud past, promising future
CLARK COUNTY WASHINGTON

N:\CIP\PROJECTS\330422-NE63rdStreet\DESIGN\DWGS\signals\ne63-spd.dwg, Layout1, 8/31/2004 3:20:50 PM, begleyk

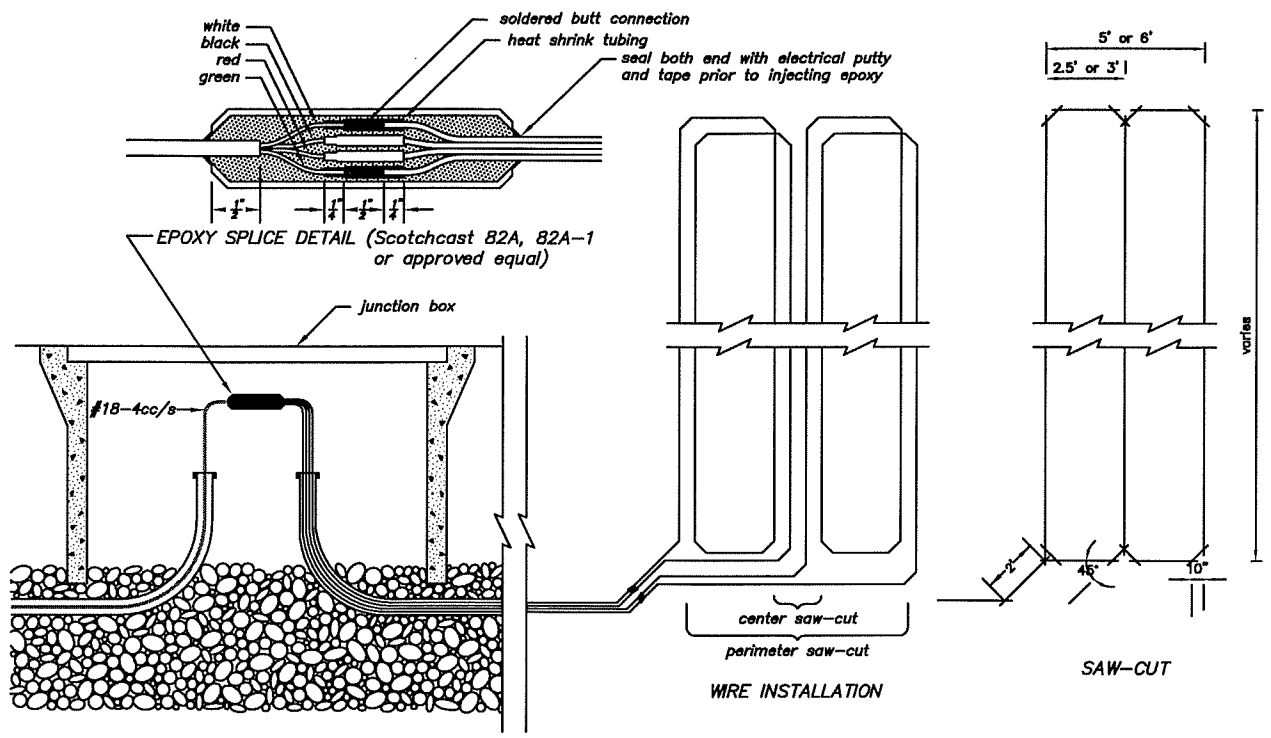

COUPLED LOOPS DETAIL

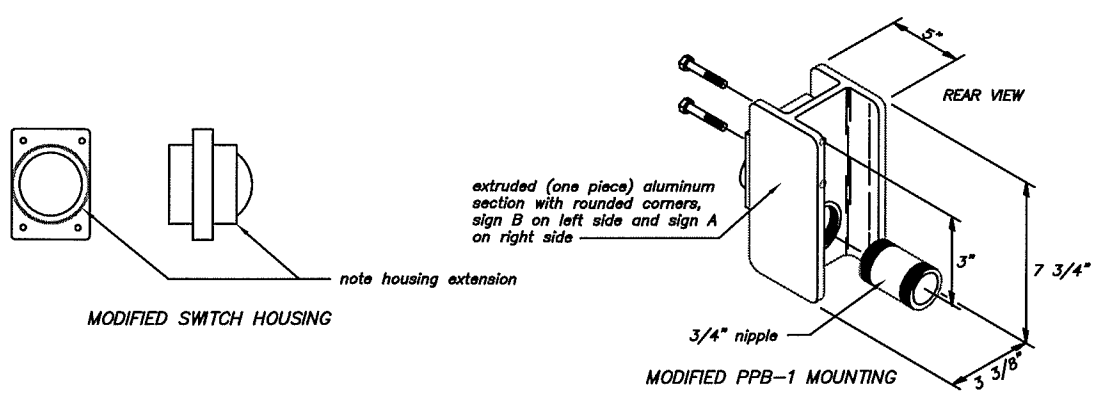

PEDESTRIAN PUSHBUTTON DETAIL

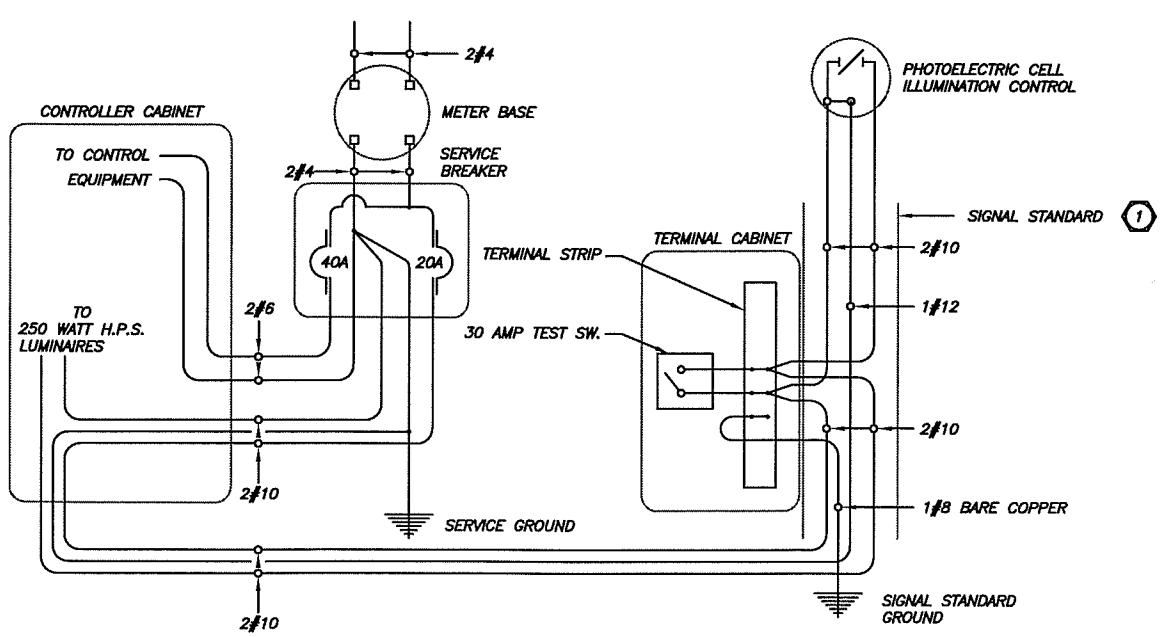

NE 162ND AVENUE at NE 73RD STREET
ELECTRICAL SERVICE DETAILS

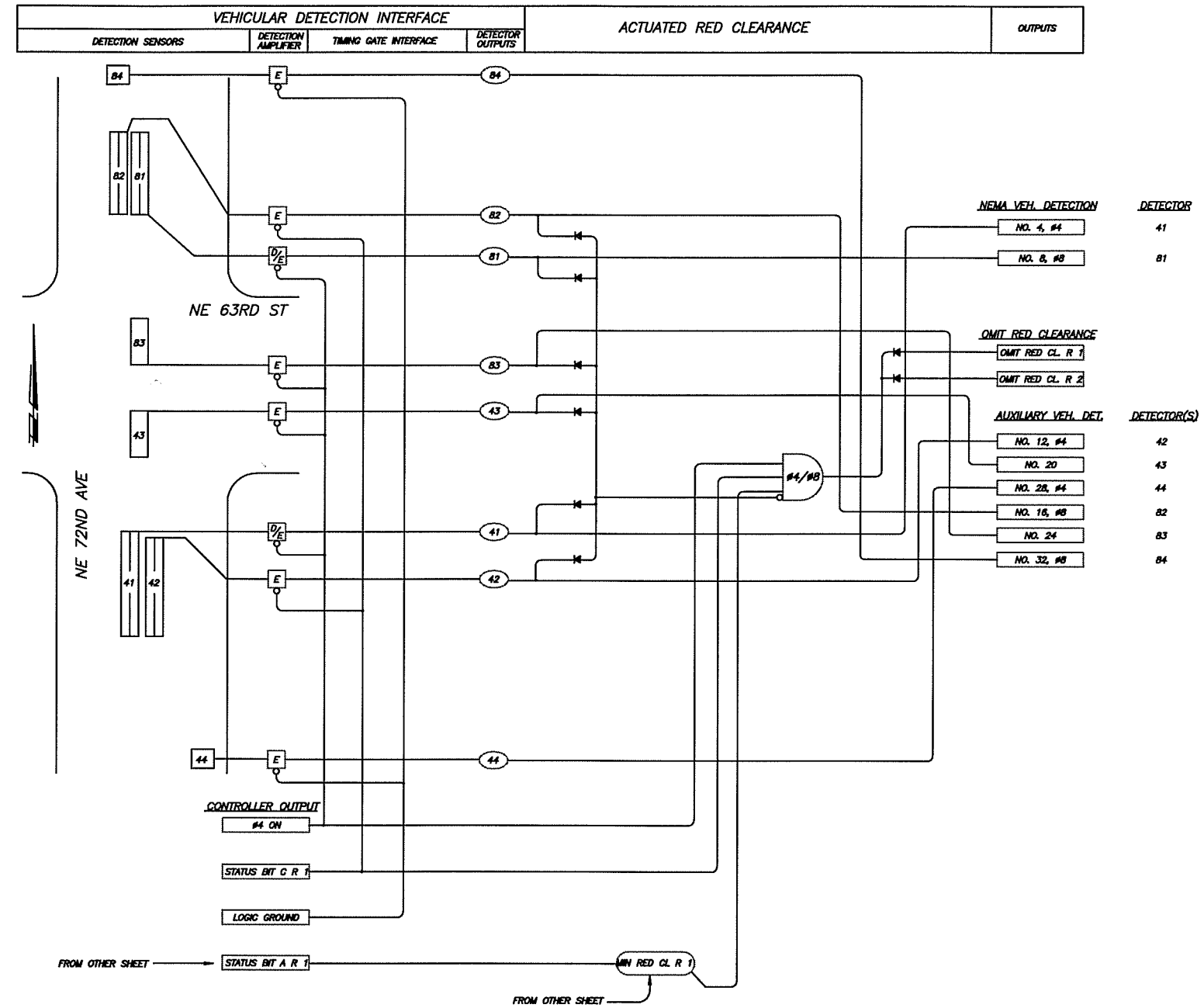

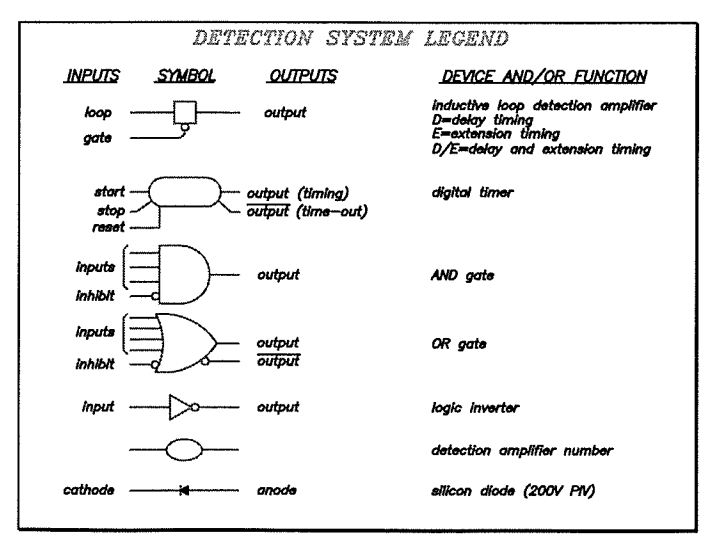

DESIGNED	EB
DRAWN	KB
CRP	330422
HOR.	NA
VERT.	NA
DATE	6/2/04
DWG:	705
SHEET 57	OF 81

CALL 48 HOURS BEFORE YOU DIG 1-800-553-4344 "It's the Law" NORTHWEST UTILITIES NOTIFICATION CENTER

STATE OF WASHINGTON EUGENE S. BEDRICH 22337 REGISTERED PROFESSIONAL ENGINEER EXPIRES JULY 17, 2005

DESIGN & ENGINEERING DIVISION
DESIGN SECTION

NE 63RD STREET AT NE 72ND AVENUE
SIGNAL SYSTEM DETAILS & DETECTION SYSTEM SCHEMATIC

proud past, promising future
CLARK COUNTY WASHINGTON

N:\CIP\PROJECTS\330422-NE63rdStreet\DESIGN\DWGS\signals\ne63ssd.dwg, Layout1, 8/31/2004 3:21:23 PM, begleyk

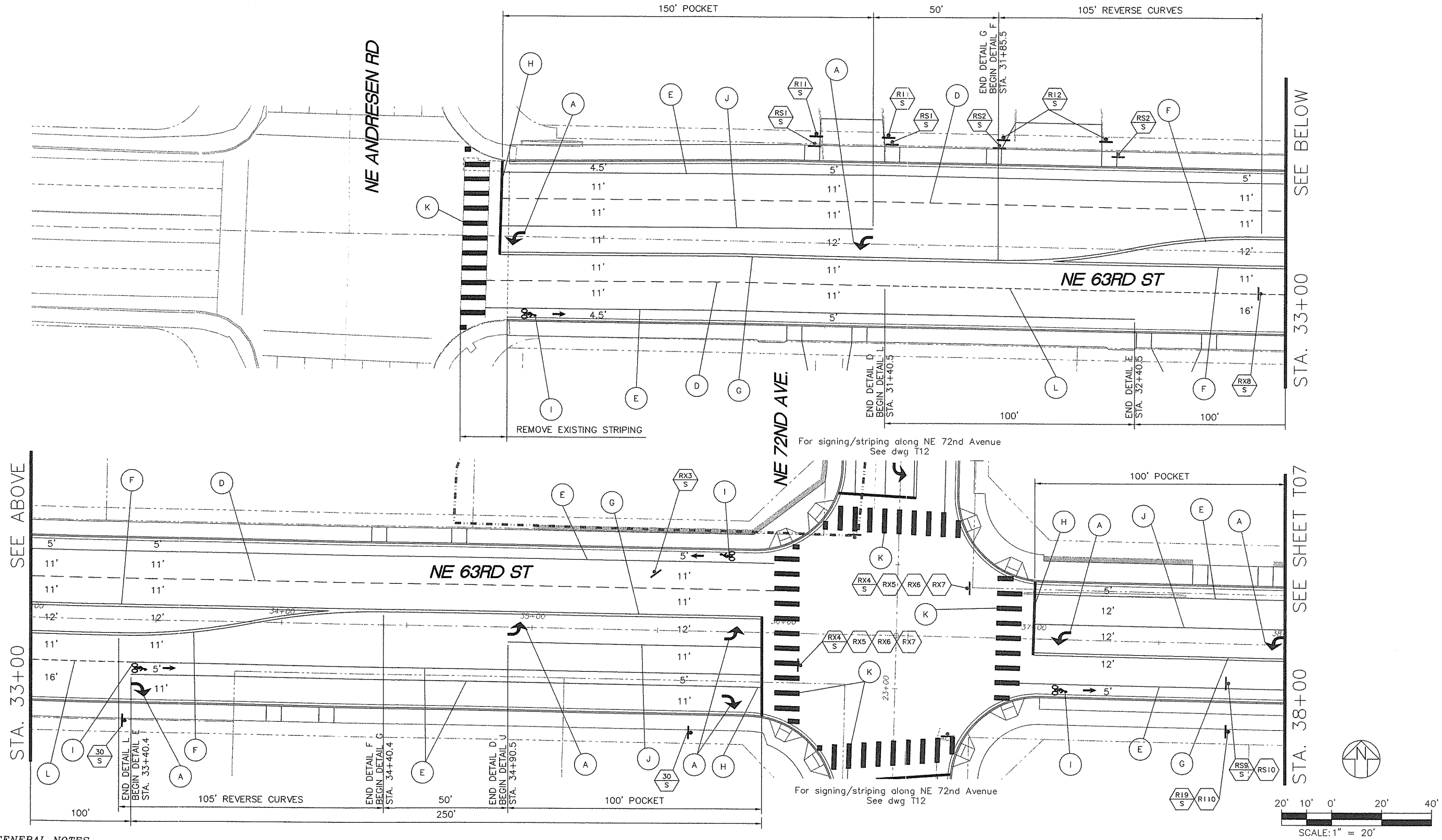

GENERAL NOTES

1. All signing and pavement markings shall conform to the requirements and specifications of the Manual on Uniform Traffic Control Devices (MUTCD), latest edition, and the 2004 WSDOT Standard Specifications for Road, Bridge and Municipal Construction.
2. Dimensions are approximate. All traffic sign positions and pavement markings shall be approved in the field by the engineer prior to installation. For restripe conditions, if dimensions for existing striping vary from those shown on plans, contractor will provide engineer the existing dimensions and gain engineer approval prior to restriping.
3. The striping and pavement marking removal process shall conform to WSDOT "Standard Specifications for Road, Bridge and Municipal Construction" section 8-22.3(6). The County's accepted practice of removal of existing painted pavement marking is by shot blasting. All other markings are removed by grinding. The contractor shall have a written approval by the engineer for any other method of removal.
4. All materials and workmanship shall conform to the 2004 WSDOT Standard Specifications for Road, Bridge and Municipal Construction.
5. Crosswalks, stop bars, and arrows shall be thermoplastic.
6. Refer to signing, striping and pavement marking details on dwgs T13 to T15.
7. Contractor to coordinate with C-Tran two weeks in advance for bus stop sign removal/installation.
8. The contractor shall maintain existing permanent signing in accordance with 2004 WSDOT Standard Specifications for Road, Bridge and Municipal Construction Section 1-07.23(1).
9. The contractor shall provide temporary pavement markings in accordance with WSDOT "Standard Specifications for Road, Bridge and Municipal Construction" section 8.23.

SHEET LEGEND

- (X) Striping detail, see dwg T13 for details.
- (N/M) Install new sign (N) on new sign support (M).
- (RSN/M) Remove and save existing sign (N) and sign support (M).
- (RXN/M) Remove and salvage existing sign (N) and sign support (M).
- (RIN/M) Reinstall existing sign (N) on new/existing sign support (M). See sign schedule for details.
- (EXN) Retain and protect existing sign (N) and support.
- New sign on new steel breakaway sign post.
- Existing sign on existing support.

M = Material: (W) = Wood
(S) = Steel
(LP) = Light Pole

PERMANENT STRIPING NOT IN CONTRACT
Work to be performed by County Forces

95% SUBMITTAL
NOT FOR CONSTRUCTION

DESIGNED: CTS
DRAWN: JCLD
CRP: 330422
HORIZ.
VERT.
DATE: 08/27/2004
DWG: T06
SHEET 58 OF 81

CALL 48 HOURS BEFORE YOU DIG
1-800-424-5555
"It's the Law"
NORTHWEST UTILITIES NOTIFICATION CENTER

PAUL L. CORLETT
STATE OF WASHINGTON
27235
PROFESSIONAL ENGINEER
EXPIRES JAN. 30, 2006

DKS Associates
TRANSPORTATION SOLUTIONS
1400 SW Fifth Avenue, Suite 500
Portland, Oregon 97201-5522
Telephone: (503) 243-3500
Fax: (503) 243-1934

DESIGN & ENGINEERING DIVISION
NE 63RD STREET IMPROVEMENTS

NE 63RD STREET
SIGNING/STRIPING PLAN

proud past, promising future
CLARK COUNTY
WASHINGTON

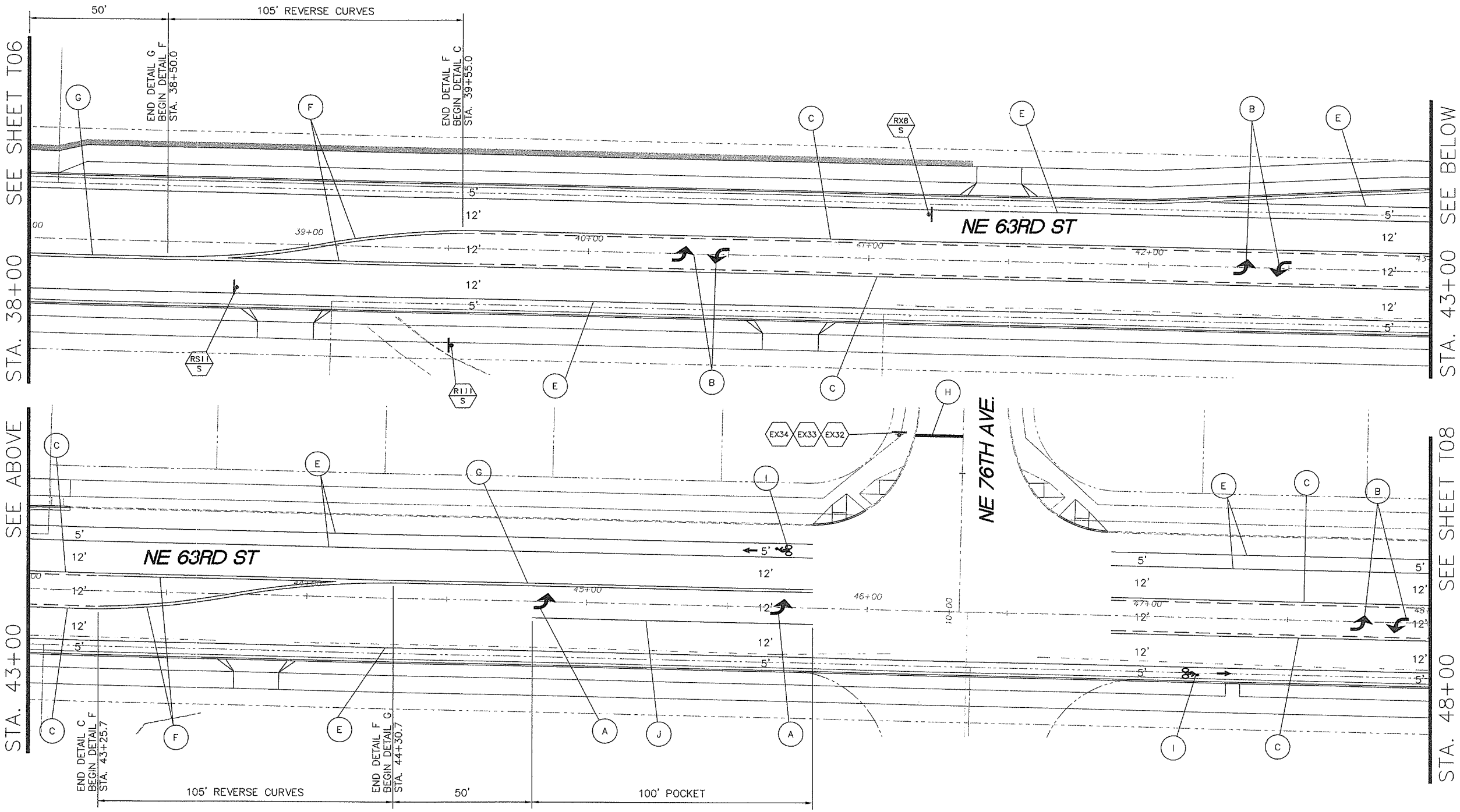

GENERAL NOTES

1. All signing and pavement markings shall conform to the requirements and specifications of the Manual on Uniform Traffic Control Devices (MUTCD), latest edition, and the 2004 WSDOT Standard Specifications for Road, Bridge and Municipal Construction.
2. Dimensions are approximate. All traffic sign positions and pavement markings shall be approved in the field by the engineer prior to installation. For restripe conditions, if dimensions for existing striping vary from those shown on plans, contractor will provide engineer the existing dimensions and gain engineer approval prior to restriping.
3. The striping and pavement marking removal process shall conform to WSDOT "Standard Specifications for Road, Bridge and Municipal Construction" section 8-22.3(6). The County's accepted practice of removal of existing painted pavement marking is by shot blasting. All other markings are removed by grinding. The contractor shall have a written approval by the engineer for any other method of removal.
4. All materials and workmanship shall conform to the 2004 WSDOT Standard Specifications for Road, Bridge and Municipal Construction.
5. Crosswalks, stop bars, and arrows shall be thermoplastic.
6. Refer to signing, striping and pavement marking details on dwgs T13 to T15.
7. Contractor to coordinate with C-Tran two weeks in advance for bus stop sign removal/installation.
8. The contractor shall maintain existing permanent signing in accordance with 2004 WSDOT Standard Specifications for Road, Bridge and Municipal Construction Section 1-07.23(1).
9. The contractor shall provide temporary pavement markings in accordance with WSDOT "Standard Specifications for Road, Bridge and Municipal Construction" section 8.23.

SHEET LEGEND

- (X) Striping detail, see dwg T13 for details.
- (N/M) Install new sign (N) on new sign support (M).
- (RSN/M) Remove and save existing sign (N) and sign support (M).
- (RXN/M) Remove and salvage existing sign (N) and sign support (M).
- (RIN/M) Reinstall existing sign (N) on new/existing sign support (M). See sign schedule for details.
- (EXN) Retain and protect existing sign (N) and support.
- New sign on new steel breakaway sign post.
- Existing sign on existing support.

M = Material: (W) = Wood
(S) = Steel
(LP) = Light Pole

PERMANENT STRIPING NOT IN CONTRACT
Work to be performed by County Forces

20' 10' 0' 20' 40'
SCALE: 1" = 20'

95% SUBMITTAL
NOT FOR CONSTRUCTION

DESIGN & ENGINEERING DIVISION
NE 63RD STREET IMPROVEMENTS

NE 63RD STREET
SIGNING/STRIPING PLAN

CLARK COUNTY WASHINGTON
proud past, promising future

DKS Associates
TRANSPORTATION SOLUTIONS
1400 SW Fifth Avenue, Suite 500
Portland, Oregon 97201-5622
Telephone: (503) 243-3500
Fax: (503) 243-1934

PROFESSIONAL ENGINEER
CLARK COUNTY, WASHINGTON
STATE OF WASHINGTON
EXPIRES JAN 30, 2005

CALL 48 HOURS BEFORE YOU DIG
1-800-424-5555
"It's the Law"
NORTHWEST UTILITIES NOTIFICATION CENTER

DESIGNED:	CTS
DRAWN:	JCLD
CRP:	330422
HORIZ.	
VERT.	
DATE:	08/27/2004
DWG:	T07
SHEET	59 OF 81

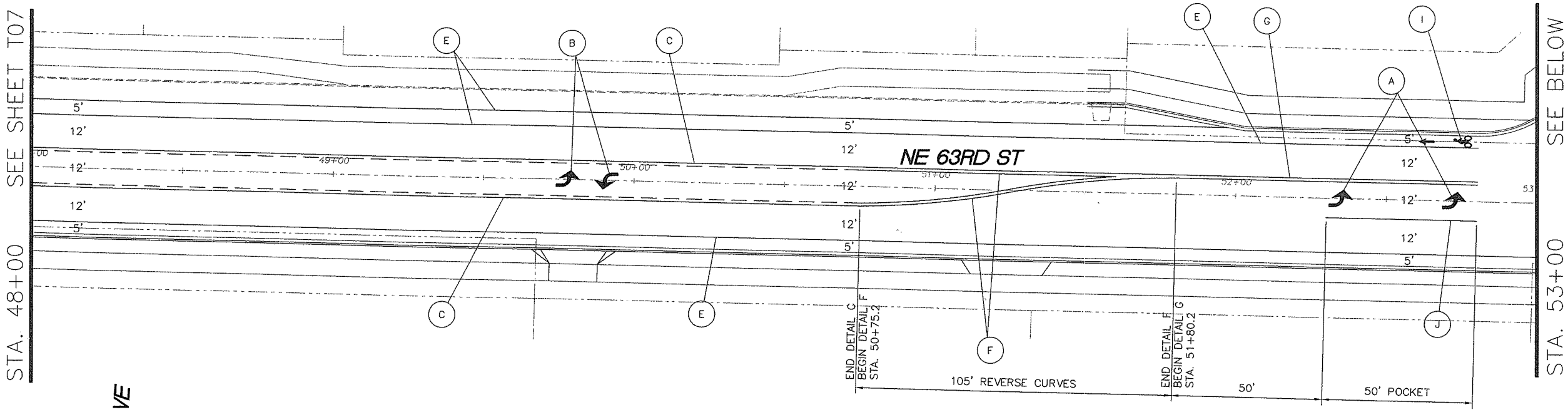

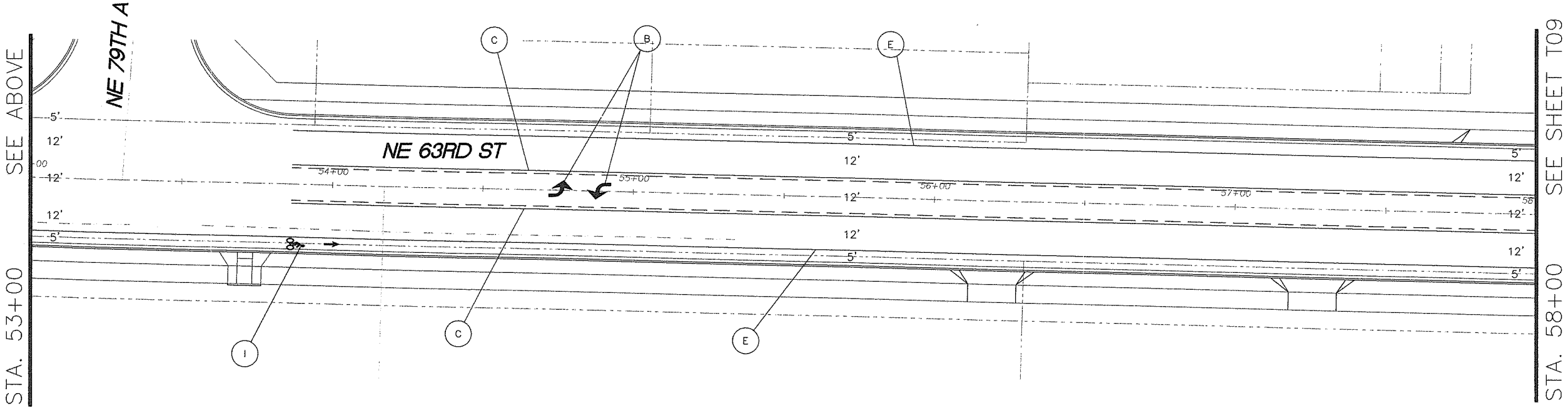

GENERAL NOTES

1. All signing and pavement markings shall conform to the requirements and specifications of the Manual on Uniform Traffic Control Devices (MUTCD), latest edition, and the 2004 WSDOT Standard Specifications for Road, Bridge and Municipal Construction.
2. Dimensions are approximate. All traffic sign positions and pavement markings shall be approved in the field by the engineer prior to installation. For restripe conditions, if dimensions for existing striping vary from those shown on plans, contractor will provide engineer the existing dimensions and gain engineer approval prior to restriping.
3. The striping and pavement marking removal process shall conform to WSDOT "Standard Specifications for Road, Bridge and Municipal Construction" section 8-22.3(6). The County's accepted practice of removal of existing painted pavement marking is by shot blasting. All other markings are removed by grinding. The contractor shall have a written approval by the engineer for any other method of removal.
4. All materials and workmanship shall conform to the 2004 WSDOT Standard Specifications for Road, Bridge and Municipal Construction.
5. Crosswalks, stop bars, and arrows shall be thermoplastic.
6. Refer to signing, striping and pavement marking details on dwgs T13 to T15.
7. Contractor to coordinate with C-Tran two weeks in advance for bus stop sign removal/installation.
8. The contractor shall maintain existing permanent signing in accordance with 2004 WSDOT Standard Specifications for Road, Bridge and Municipal Construction Section 1-07.23(1).
9. The contractor shall provide temporary pavement markings in accordance with WSDOT "Standard Specifications for Road, Bridge and Municipal Construction" section 8.23.

SHEET LEGEND

- (X) Striping detail, see dwg T13 for details.
- (N/M) Install new sign (N) on new sign support (M).
- (RSN/M) Remove and save existing sign (N) and sign support (M).
- (RXN/M) Remove and salvage existing sign (N) and sign support (M).
- (RIN/M) Reinstall existing sign (N) on new/existing sign support (M). See sign schedule for details.
- (EXN) Retain and protect existing sign (N) and support.
- New sign on new steel breakaway sign post.
- Existing sign on existing support.
- M = Material: (W) = Wood, (S) = Steel, (LP) = Light Pole

PERMANENT STRIPING NOT IN CONTRACT
Work to be performed by County Forces

20' 10' 0' 20' 40'
SCALE: 1" = 20'

95% SUBMITTAL
NOT FOR CONSTRUCTION

DESIGNED: CTS
DRAWN: JCLD
CRP: 330422
HORIZ.
VERT.
DATE: 08/27/2004
DWG: T08
SHEET 60 OF 81

CALL 48 HOURS BEFORE YOU DIG
1-800-424-5555
"It's the Law"
NORTHWEST UTILITIES NOTIFICATION CENTER

PROFESSIONAL ENGINEER
STATE OF WASHINGTON
27735
REGISTERED PROFESSIONAL ENGINEER
EXPIRES JAN. 30, 2005

DKS Associates
TRANSPORTATION SOLUTIONS
1400 SW Fifth Avenue, Suite 500
Portland, Oregon 97201-5902
Telephone: (503) 243-3500
Fax: (503) 243-1934

DESIGN & ENGINEERING DIVISION
NE 63RD STREET IMPROVEMENTS

NE 63RD STREET
SIGNING/STRIPING PLAN

proud past, promising future
CLARK COUNTY
WASHINGTON

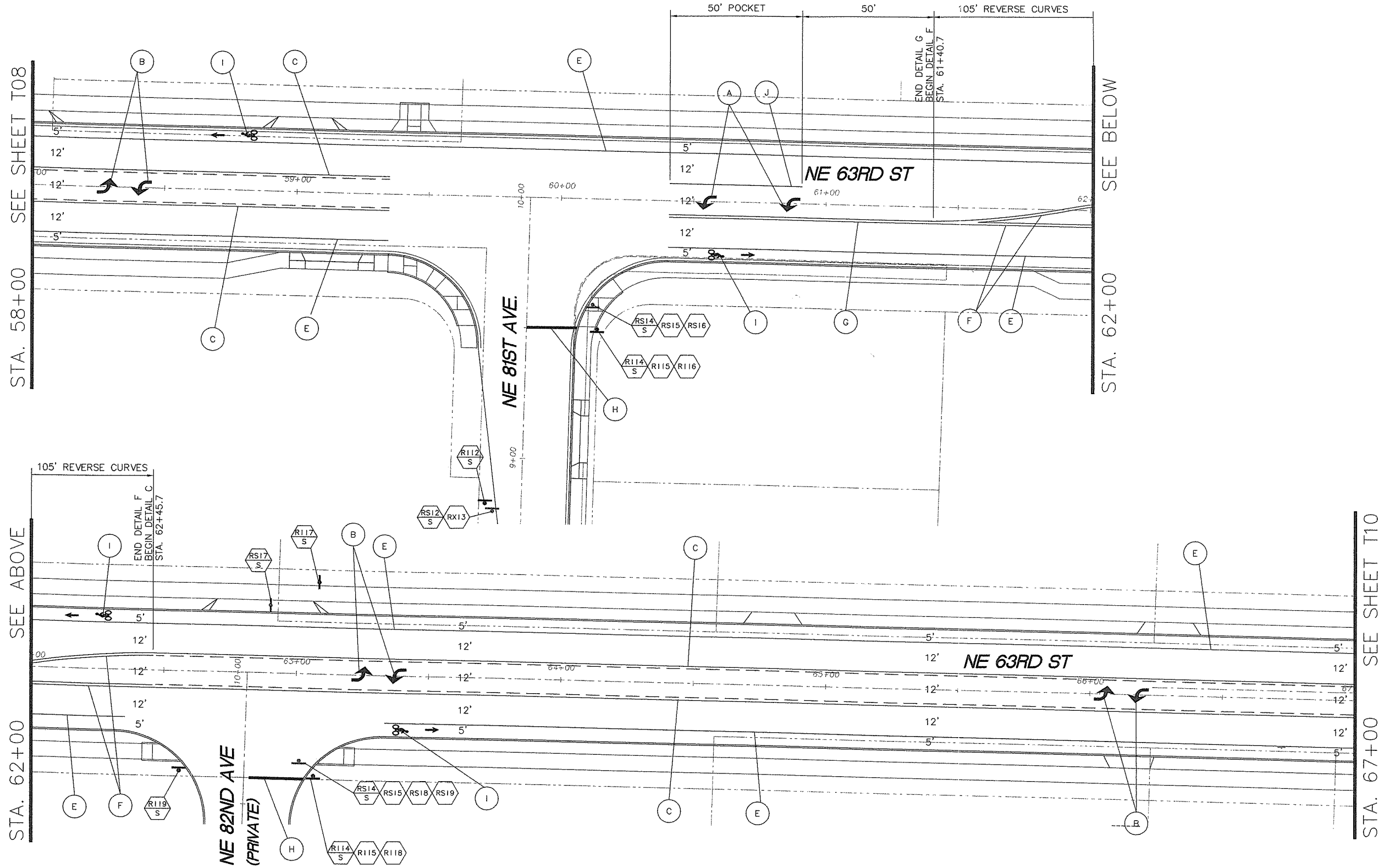

GENERAL NOTES

1. All signing and pavement markings shall conform to the requirements and specifications of the Manual on Uniform Traffic Control Devices (MUTCD), latest edition, and the 2004 WSDOT Standard Specifications for Road, Bridge and Municipal Construction.
2. Dimensions are approximate. All traffic sign positions and pavement markings shall be approved in the field by the engineer prior to installation. For restripe conditions, if dimensions for existing striping vary from those shown on plans, contractor will provide engineer the existing dimensions and gain engineer approval prior to restriping.
3. The striping and pavement marking removal process shall conform to WSDOT "Standard Specifications for Road, Bridge and Municipal Construction" section 8-22.3(6). The County's accepted practice of removal of existing painted pavement marking is by shot blasting. All other markings are removed by grinding. The contractor shall have a written approval by the engineer for any other method of removal.
4. All materials and workmanship shall conform to the 2004 WSDOT Standard Specifications for Road, Bridge and Municipal Construction.
5. Crosswalks, stop bars, and arrows shall be thermoplastic.
6. Refer to signing, striping and pavement marking details on dwgs T13 to T15.
7. Contractor to coordinate with C-Tran two weeks in advance for bus stop sign removal/installation.
8. The contractor shall maintain existing permanent signing in accordance with 2004 WSDOT Standard Specifications for Road, Bridge and Municipal Construction Section 1-07.23(1).
9. The contractor shall provide temporary pavement markings in accordance with WSDOT "Standard Specifications for Road, Bridge and Municipal Construction" section 8.23.

SHEET LEGEND

- (X) Striping detail, see dwg T13 for details.
- (N/M) Install new sign (N) on new sign support (M).
- (RSN/M) Remove and save existing sign (N) and sign support (M).
- (RXN/M) Remove and salvage existing sign (N) and sign support (M).
- (RIN/M) Reinstall existing sign (N) on new/existing sign support (M). See sign schedule for details.
- (EXN) Retain and protect existing sign (N) and support.
- New sign on new steel breakaway sign post.
- Existing sign on existing support.

M = Material: (W) = Wood
(S) = Steel
(LP) = Light Pole

PERMANENT STRIPING NOT IN CONTRACT
Work to be performed by County Forces

20' 10' 0' 20' 40'
SCALE: 1" = 20'

95% SUBMITTAL
NOT FOR CONSTRUCTION

DESIGN & ENGINEERING DIVISION
NE 63RD STREET IMPROVEMENTS

NE 63RD STREET
SIGNING/STRIPING PLAN

DKS Associates
TRANSPORTATION SOLUTIONS
1400 SW Fifth Avenue, Suite 500
Portland, Oregon 97201-5600
Telephone: (503) 243-3500
Fax: (503) 243-1934

proud past, promising future
CLARK COUNTY
WASHINGTON

DESIGNED:	CTS
DRAWN:	JCLD
CRP:	330422
HORIZ.	
VERT.	
DATE:	08/27/2004
DWG:	T09
SHEET	61 OF 81

CALL 48 HOURS BEFORE YOU DIG
1-800-424-5555
"It's the Law"
NORTHWEST UTILITIES NOTIFICATION CENTER

PRELIMINARY
NOT FOR CONSTRUCTION
PROFESSIONAL ENGINEER
STATE OF WASHINGTON
EXPIRES JAN. 10, 2005

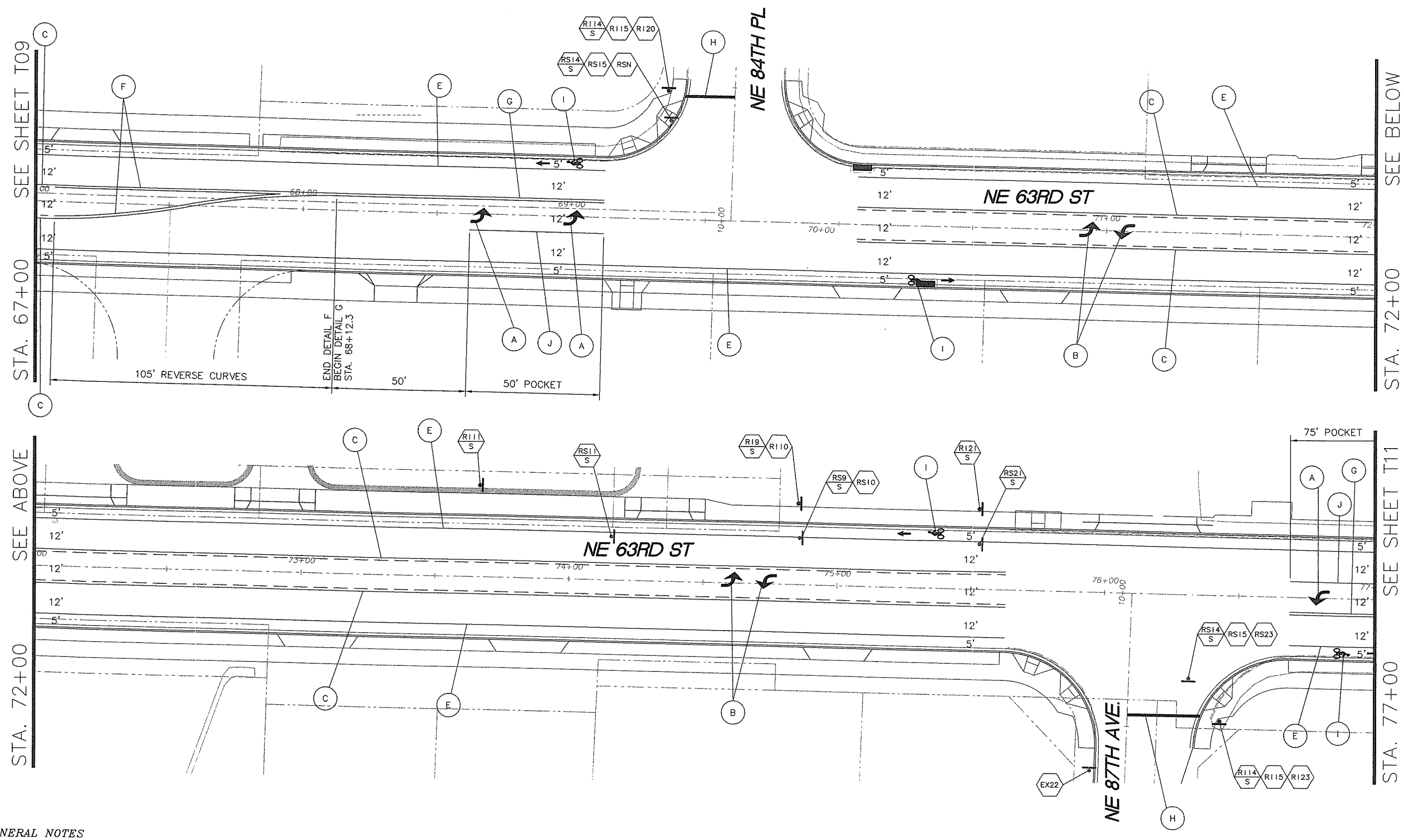

GENERAL NOTES

1. All signing and pavement markings shall conform to the requirements and specifications of the Manual on Uniform Traffic Control Devices (MUTCD), latest edition, and the 2004 WSDOT Standard Specifications for Road, Bridge and Municipal Construction.
2. Dimensions are approximate. All traffic sign positions and pavement markings shall be approved in the field by the engineer prior to installation. For restripe conditions, if dimensions for existing striping vary from those shown on plans, contractor will provide engineer the existing dimensions and gain engineer approval prior to restriping.
3. The striping and pavement marking removal process shall conform to WSDOT "Standard Specifications for Road, Bridge and Municipal Construction" section 8-22.3(6). The County's accepted practice of removal of existing painted pavement marking is by shot blasting. All other markings are removed by grinding. The contractor shall have a written approval by the engineer for any other method of removal.
4. All materials and workmanship shall conform to the 2004 WSDOT Standard Specifications for Road, Bridge and Municipal Construction.
5. Crosswalks, stop bars, and arrows shall be thermoplastic.
6. Refer to signing, striping and pavement marking details on dwgs T13 to T15.
7. Contractor to coordinate with C-Tran two weeks in advance for bus stop sign removal/installation.
8. The contractor shall maintain existing permanent signing in accordance with 2004 WSDOT Standard Specifications for Road, Bridge and Municipal Construction Section 1-07.23(1).
9. The contractor shall provide temporary pavement markings in accordance with WSDOT "Standard Specifications for Road, Bridge and Municipal Construction" section 8.23.

SHEET LEGEND

- (X) Striping detail, see dwg T13 for details.
- (N/M) Install new sign (N) on new sign support (M).
- (RSN/M) Remove and save existing sign (N) and sign support (M).
- (RXN/M) Remove and salvage existing sign (N) and sign support (M).
- (RIN/M) Reinstall existing sign (N) on new/existing sign support (M). See sign schedule for details.
- (EXN) Retain and protect existing sign (N) and support.
- New sign on new steel breakaway sign post.
- Existing sign on existing support.
- M = Material: (W) = Wood, (S) = Steel, (LP) = Light Pole

PERMANENT STRIPING NOT IN CONTRACT
Work to be performed by County Forces

SCALE: 1" = 20'

95% SUBMITTAL
NOT FOR CONSTRUCTION

DESIGNED:	CTS
DRAWN:	JCLD
CRP:	330422
HORIZ.	
VERT.	
DATE:	08/27/2004
DWG:	T10
SHEET 62 OF 81	

CALL 48 HOURS BEFORE YOU DIG
1-800-424-5555
"It's the Law"
NORTHWEST UTILITIES NOTIFICATION CENTER

PROFESSIONAL ENGINEER
STATE OF WASHINGTON
PROFESSIONAL ENGINEER
EXPIRES JAN 30, 2005

DKS Associates
TRANSPORTATION SOLUTIONS
1400 SW Fifth Avenue, Suite 500
Portland, Oregon 97201-5622
Telephone: (503) 243-3500
Fax: (503) 274-8724

DESIGN & ENGINEERING DIVISION
NE 63RD STREET IMPROVEMENTS

NE 63RD STREET
SIGNING/STRIPING PLAN

proud past, promising future
CLARK COUNTY
WASHINGTON

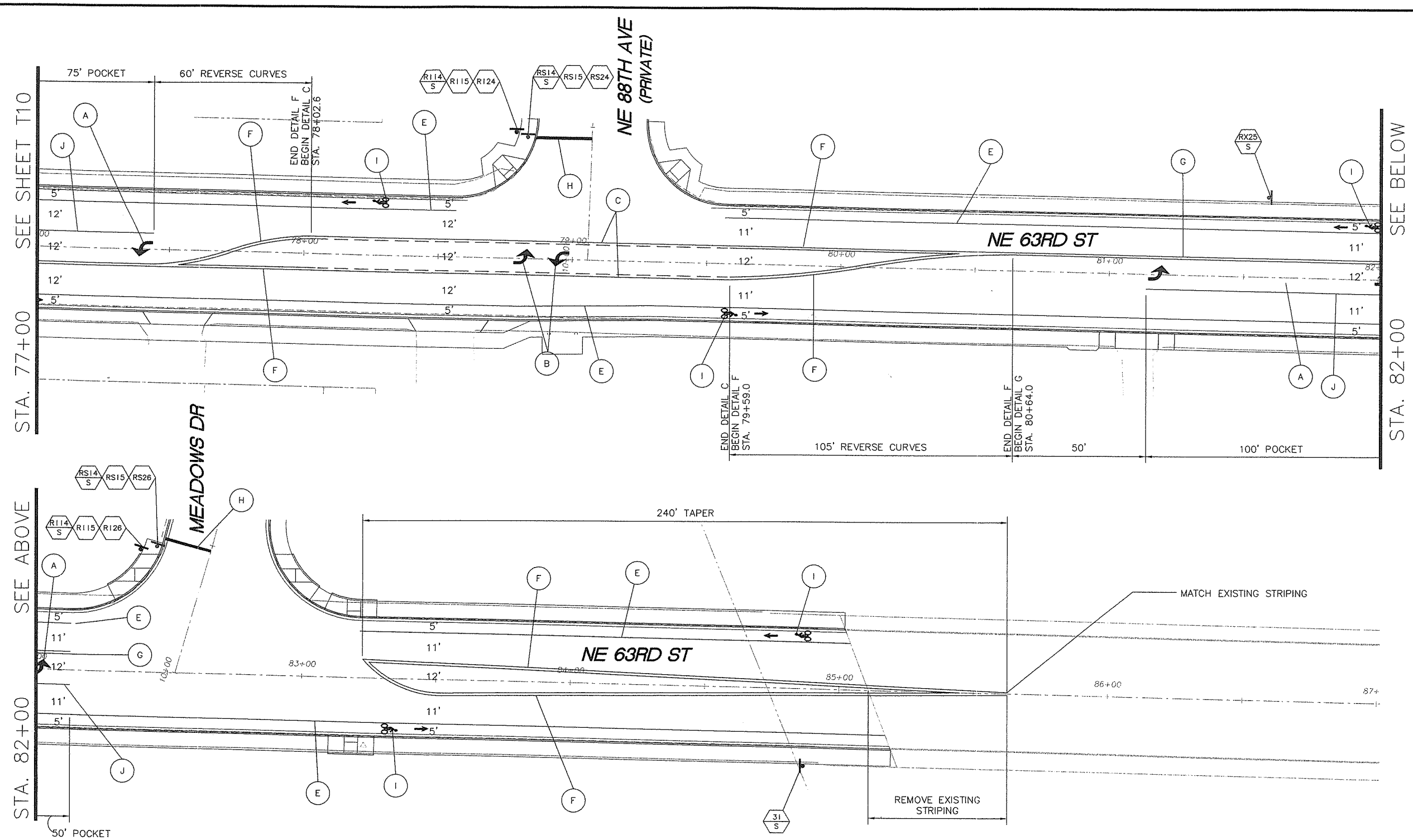

GENERAL NOTES

1. All signing and pavement markings shall conform to the requirements and specifications of the Manual on Uniform Traffic Control Devices (MUTCD), latest edition, and the 2004 WSDOT Standard Specifications for Road, Bridge and Municipal Construction.
2. Dimensions are approximate. All traffic sign positions and pavement markings shall be approved in the field by the engineer prior to installation. For restripe conditions, if dimensions for existing striping vary from those shown on plans, contractor will provide engineer the existing dimensions and gain engineer approval prior to restriping.
3. The striping and pavement marking removal process shall conform to WSDOT "Standard Specifications for Road, Bridge and Municipal Construction" section 8-22.3(6). The County's accepted practice of removal of existing painted pavement marking is by shot blasting. All other markings are removed by grinding. The contractor shall have a written approval by the engineer for any other method of removal.
4. All materials and workmanship shall conform to the 2004 WSDOT Standard Specifications for Road, Bridge and Municipal Construction.
5. Crosswalks, stop bars, and arrows shall be thermoplastic.
6. Refer to signing, striping and pavement marking details on dwgs T13 to T15.
7. Contractor to coordinate with C-Tran two weeks in advance for bus stop sign removal/installation.
8. The contractor shall maintain existing permanent signing in accordance with 2004 WSDOT Standard Specifications for Road, Bridge and Municipal Construction Section 1-07.23(1).
9. The contractor shall provide temporary pavement markings in accordance with WSDOT "Standard Specifications for Road, Bridge and Municipal Construction" section 8.23.

SHEET LEGEND

- (X) Striping detail, see dwg T13 for details.
- (N / M) Install new sign (N) on new sign support (M).
- (RSN / M) Remove and save existing sign (N) and sign support (M).
- (RXN / M) Remove and salvage existing sign (N) and sign support (M).
- (RIN / M) Reinstall existing sign (N) on new/existing sign support (M). See sign schedule for details.
- (EXN) Retain and protect existing sign (N) and support.
- New sign on new steel breakaway sign post.
- Existing sign on existing support.

M = Material: (W) = Wood
(S) = Steel
(LP) = Light Pole

PERMANENT STRIPING NOT IN CONTRACT
Work to be performed by County Forces

20' 10' 0' 20' 40'
SCALE: 1" = 20'

95% SUBMITTAL
NOT FOR CONSTRUCTION

DESIGNED: CTS
DRAWN: JCLD
CRP: 330422
HORIZ.
VERT.
DATE: 08/27/2004
DWG: T11
SHEET 63 OF 81

CALL 48 HOURS BEFORE YOU DIG
1-800-424-5555
"It's the Law"
NORTHWEST UTILITIES NOTIFICATION CENTER

PRELIMINARY
NOT FOR CONSTRUCTION
EXPIRES JAN. 30, 2005

DKS Associates
TRANSPORTATION SOLUTIONS
1400 SW Fifth Avenue, Suite 900
Portland, Oregon 97201-5682
Telephone: (503) 243-3500
Fax: (503) 243-1934

DESIGN & ENGINEERING DIVISION
NE 63RD STREET IMPROVEMENTS

NE 63RD STREET
SIGNING/STRIPING PLAN

proud past, promising future
CLARK COUNTY
WASHINGTON

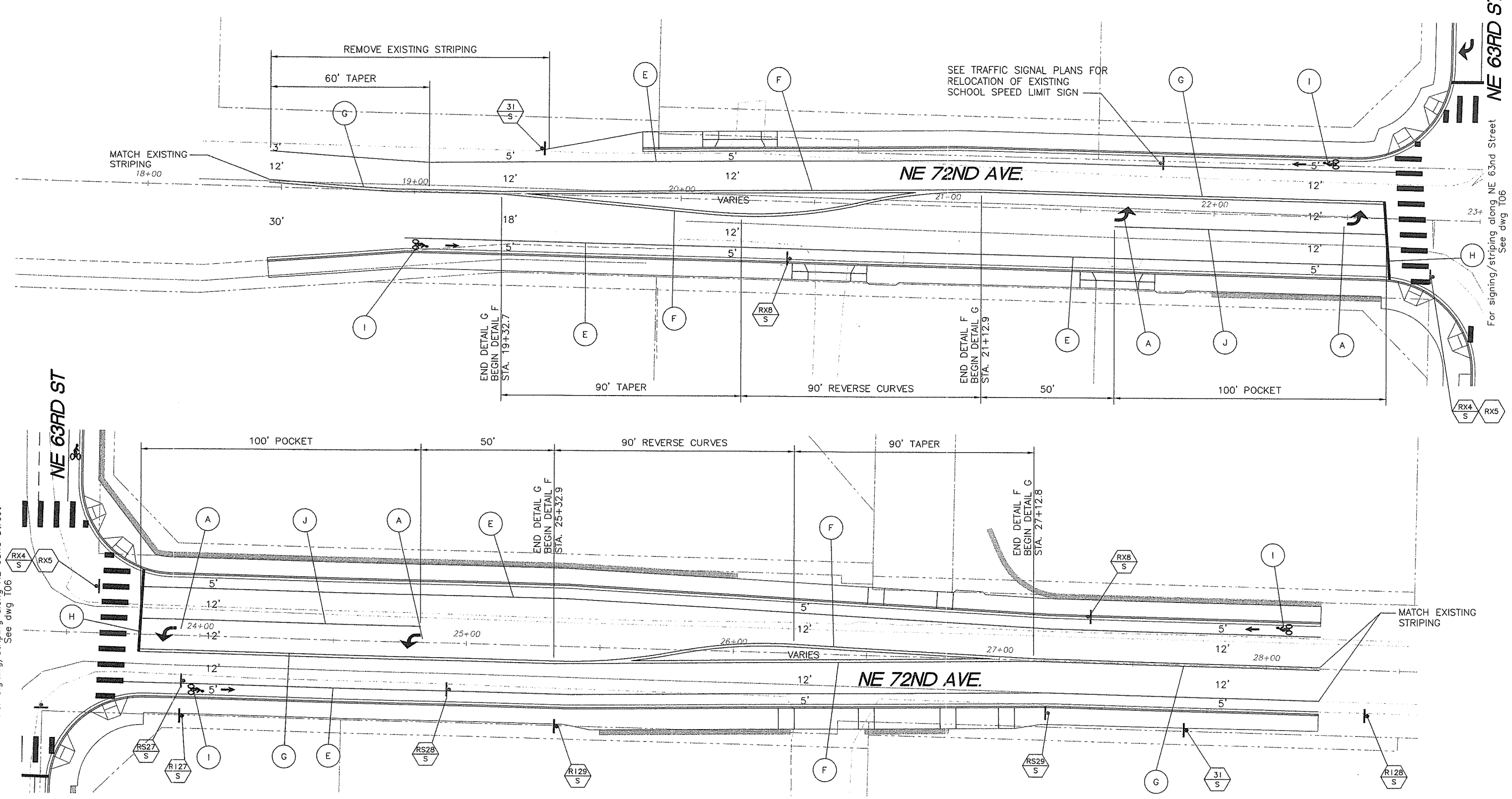

GENERAL NOTES

1. All signing and pavement markings shall conform to the requirements and specifications of the Manual on Uniform Traffic Control Devices (MUTCD), latest edition, and the 2004 WSDOT Standard Specifications for Road, Bridge and Municipal Construction.
2. Dimensions are approximate. All traffic sign positions and pavement markings shall be approved in the field by the engineer prior to installation. For restripe conditions, if dimensions for existing striping vary from those shown on plans, contractor will provide engineer the existing dimensions and gain engineer approval prior to restriping.
3. The striping and pavement marking removal process shall conform to WSDOT "Standard Specifications for Road, Bridge and Municipal Construction" section 8-22.3(6). The County's accepted practice of removal of existing painted pavement marking is by shot blasting. All other markings are removed by grinding. The contractor shall have a written approval by the engineer for any other method of removal.
4. All materials and workmanship shall conform to the 2004 WSDOT Standard Specifications for Road, Bridge and Municipal Construction.
5. Crosswalks, stop bars, and arrows shall be thermoplastic.
6. Refer to signing, striping and pavement marking details on dwgs T13 to T15.
7. Contractor to coordinate with C-Tran two weeks in advance for bus stop sign removal/installation.
8. The contractor shall maintain existing permanent signing in accordance with 2004 WSDOT Standard Specifications for Road, Bridge and Municipal Construction Section 1-07.23(1).
9. The contractor shall provide temporary pavement markings in accordance with WSDOT "Standard Specifications for Road, Bridge and Municipal Construction" section 8.23.

SHEET LEGEND

- (X) Striping detail, see dwg T13 for details.
- (N/M) Install new sign (N) on new sign support (M).
- (RSN/M) Remove and save existing sign (N) and sign support (M).
- (RXN/M) Remove and salvage existing sign (N) and sign support (M).
- (RIN/M) Reinstall existing sign (N) on new/existing sign support (M). See sign schedule for details.
- (EXN) Retain and protect existing sign (N) and support.
- New sign on new steel breakaway sign post.
- Existing sign on existing support.

M = Material: (W) = Wood
(S) = Steel
(LP) = Light Pole

PERMANENT STRIPING NOT IN CONTRACT
Work to be performed by County Forces

20' 10' 0' 20' 40'
SCALE: 1" = 20'

95% SUBMITTAL
NOT FOR CONSTRUCTION

DESIGN & ENGINEERING DIVISION
NE 63RD STREET IMPROVEMENTS

NE 72ND AVENUE
SIGNING/STRIPING PLAN

DESIGNED: CTS
DRAWN: JCLD
CRP: 330422
HORIZ.
VERT.
DATE: 08/27/2004
DWG: T12
SHEET 64 OF 81

CALL 48 HOURS BEFORE YOU DIG
1-800-424-5555
"It's the Law"
NORTHWEST UTILITIES NOTIFICATION CENTER

PRELIMINARY
PAUL R. COFFEY
STATE OF WASHINGTON
27737
PROFESSIONAL ENGINEER
EXPIRES JULY 30, 2005

DKS Associates
TRANSPORTATION SOLUTIONS
1400 SW Fifth Avenue, Suite 500
Portland, Oregon 97201-5902
Telephone: (503) 243-3500
Fax: (503) 243-1934

CLARK COUNTY
WASHINGTON
proud past, promising future

STRIPING LEGEND

ARROWS SHALL BE TYPE 2L OR 2R (SEE WSDOT STANDARD PLAN H-5c). ARROWS SHALL BE THERMOPLASTIC PAVEMENT MARKING MATERIAL.

PAVEMENT ARROW MARKINGS (A)
NTS

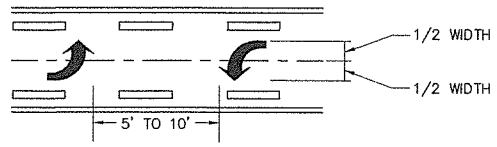

ARROWS SHALL BE TYPE 2L (SEE WSDOT STANDARD PLAN H-5c). ARROWS SHALL BE THERMOPLASTIC PAVEMENT MARKING MATERIAL, CENTERED IN TURN LANE.

TWO WAY LEFT TURN ARROWS (B)
NTS

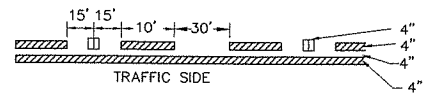

4" YELLOW LINES (PAINT) WITH TYPE 2YY RPMS AT 80' O.C. OUTSIDE LINE IS SOLID.

TWO WAY LEFT TURN STRIPE (C)
NTS

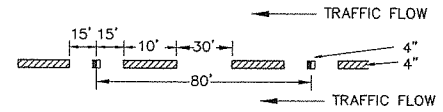

4" WHITE LINE (PAINT) WITH TYPE 2W RPM'S PLACED AT 80' INTERVALS ON TANGENTS AND 40' INTERVALS ON HORIZONTAL CURVES.

LANE LINE (D)
NTS

8" WHITE LINE (PAINT).

BIKE LANE STRIPE (E)
NTS

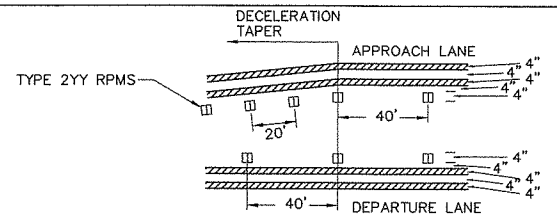

DOUBLE YELLOW CENTER STRIPE (F)
NTS

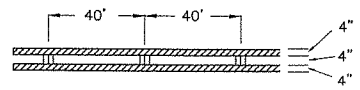

TWO 4"YELLOW LINES (PAINT) WITH 2YY RPMS AT 40' O.C.

ALTERNATE DOUBLE YELLOW CENTER (G)
NTS

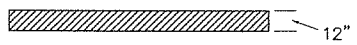

STOPBAR SHALL BE THERMOPLASTIC PAVEMENT MARKING MATERIAL. PLACE STOPBAR 4' FROM EDGE OF LADDER CROSSWALK WHEN APPLICABLE.

STOPBAR (H)
NTS

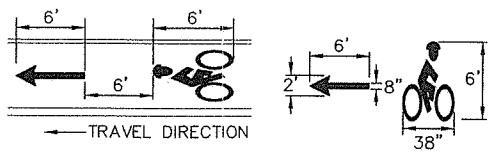

BIKE LANE SYMBOL SHALL BE WHITE THERMOPLASTIC PAVEMENT MARKING MATERIAL

BIKE LANE SYMBOL (I)
NTS

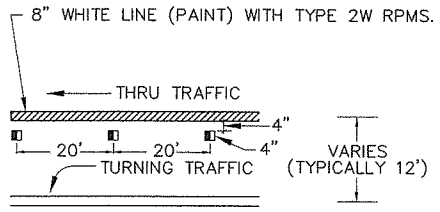

GORE STRIPE (J)
NTS

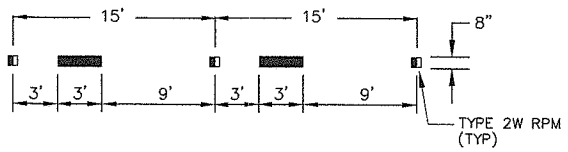

8" WHITE LINE (PAINT) WITH 2 TYPE 2W PAVEMENT MARKERS SIDE BY SIDE.

DROP LANE LINE (L)
NTS

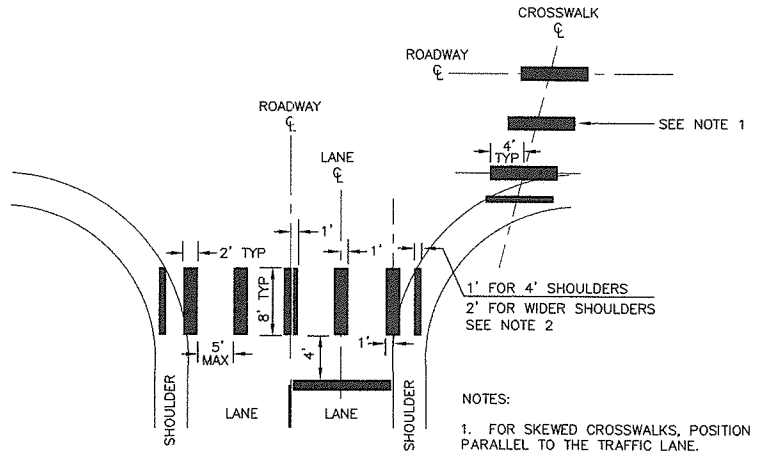

NOTES:

1. FOR SKEWED CROSSWALKS, POSITION THE LINES PARALLEL TO THE TRAFFIC LANE.
2. INSTALL CROSSWALK LINE IN SHOULDER AREA ONLY WHEN ADJACENT TO SIDEWALK OR SEPARATE WALKWAY.
3. CROSSWALK SHALL BE WHITE THERMOPLASTIC PAVEMENT MARKING MATERIAL.

CROSSWALK (K)
NTS

PERMANENT STRIPING NOT IN CONTRACT
Work to be performed by County Forces

95% SUBMITTAL
NOT FOR CONSTRUCTION

DESIGN & ENGINEERING DIVISION
NE 63RD STREET IMPROVEMENTS

STRIPING DETAILS

DESIGNED: CTS
DRAWN: JCLD
CRP: 330422
HORIZ.
VERT.
DATE: 08/27/2004
DWG: T13
SHEET 65 OF 81

CALL 48 HOURS BEFORE YOU DIG
1-800-424-5555
"It's the Law"
NORTHWEST UTILITIES NOTIFICATION CENTER

PRELIMINARY
STATE OF WASHINGTON
RICHARD W. CAFFRY
22736
REGISTERED PROFESSIONAL ENGINEER
EXPIRES APR. 30, 2005

DKS Associates
TRANSPORTATION SOLUTIONS
1400 SW Fifth Avenue, Suite 500
Portland, Oregon 97201-5682
Telephone: (503) 243-3500
Fax: (503) 243-3594

proud past, promising future
CLARK COUNTY
WASHINGTON

SIGN SCHEDULE

NO.	CODE	QTY	LEGEND/ DESCRIPTION	SIZE	REMARKS
1		2	PUBLIC ENTRANCE		REINSTALL EXISTING SIGN ON NEW STEEL SUPPORT.
2		2	DO NOT ENTER		REINSTALL EXISTING SIGN ON NEW STEEL SUPPORT.
3		1	NO PARKING		REMOVE AND SALVAGE EXISTING SIGN AND SUPPORT.
4		4	STOP		REMOVE AND SALVAGE EXISTING SIGN AND SUPPORT.
5		4	ALL WAY		REMOVE AND SALVAGE EXISTING SIGN.
6		2	NE 63RD ST		REMOVE AND SALVAGE EXISTING SIGN.
7		2	NE 72ND AV		REMOVE AND SALVAGE EXISTING SIGN.
8		4	STOP AHEAD (SYMBOL)		REMOVE AND SALVAGE EXISTING SIGN AND SUPPORT.
9		2	ENTERING GLENWOOD HILLS		REINSTALL EXISTING SIGN ON NEW STEEL SUPPORT.
10		2	SLOW DOWN!		REINSTALL EXISTING SIGN.
11		2	SPEED LIMIT 35		REINSTALL EXISTING SIGN ON NEW STEEL SUPPORT.
12		1	SPEED LIMIT 25		REINSTALL EXISTING SIGN ON NEW STEEL SUPPORT.
13		1	CALL BEFORE YOU DIG		REMOVE AND SALVAGE EXISTING SIGN.
14		6	STOP		REINSTALL EXISTING SIGN ON NEW STEEL SUPPORT.
15		6	NE 63RD ST		REINSTALL EXISTING SIGN.
16		1	NE 81ST AV		REINSTALL EXISTING SIGN.
17		1	NE 82ND CT PRIVATE ROAD		REINSTALL EXISTING SIGN ON NEW STEEL SUPPORT.
18		1	NE 82ND AV PRIVATE ROAD		REINSTALL EXISTING SIGN.
19		1	DEAD END		REINSTALL EXISTING SIGN ON NEW STEEL SUPPORT.
20		1	NE 84TH PL		REINSTALL EXISTING SIGN.
21		1	SCHOOL BUS STOP AHEAD		REINSTALL EXISTING SIGN ON NEW STEEL SUPPORT.
22		1	SPEED LIMIT 25		RETAIN AND PROTECT EXISTING SIGN AND SUPPORT.
23		1	NE 87TH AV		REINSTALL EXISTING SIGN.
24		1	NE 88TH AV PRIVATE ROAD		REINSTALL EXISTING SIGN.
25		1	ROAD NARROWS		REMOVE AND SALVAGE EXISTING SIGN AND SUPPORT.
26		1	NE MEADOWS DR		REINSTALL EXISTING SIGN.
27		1	END SCHOOL ZONE		REINSTALL EXISTING SIGN ON NEW STEEL SUPPORT.
28		1	PEDESTRIAN (SYMBOL)		REINSTALL EXISTING SIGN ON NEW STEEL SUPPORT.
29		1	SPEED LIMIT 30		REINSTALL EXISTING SIGN ON NEW STEEL SUPPORT.
30	R3-8b	2	"ONLY"	48" x 30"	INSTALL NEW SIGN ON NEW STEEL SUPPORT.
31	R3-16A	3	(BIKE SYMBOL) LANE ENDS	24" x 30"	INSTALL NEW SIGN ON NEW STEEL SUPPORT.
32		1	STOP		RETAIN AND PROTECT EXISTING SIGN AND SUPPORT.
33		1	NE 63RD ST		RETAIN AND PROTECT EXISTING SIGN AND SUPPORT.
34		1	NE 76TH AV		RETAIN AND PROTECT EXISTING SIGN AND SUPPORT.

GENERAL SIGNING NOTES:

1. ALL SIGNING SHALL CONFORM TO WASHINGTON STATE DEPARTMENT OF TRANSPORTATION'S SPECIFICATIONS (2004) AND THE MANUAL ON UNIFORM TRAFFIC CONTROL DEVICES.

2. ALL POSTS SHALL BE PERFORATED TUBULAR POSTS OR "UNISTRUT'S TELESPAR" POSTS UNLESS OTHERWISE SPECIFIED. SEE NOTES UNDER INSTALLATION DETAIL.

95% SUBMITTAL
NOT FOR CONSTRUCTION

DESIGNED: CTS
DRAWN: JCLD
CRP: 330422
HORIZ.
VERT.
DATE: 08/27/2004
DWG: T14
SHEET 66 OF 81

CALL 48 HOURS BEFORE YOU DIG
1-800-424-5555
"It's the Law"
NORTHWEST UTILITIES NOTIFICATION CENTER

PRELIMINARY
PAUL L. LOFT
EXPIRES JAN. 30, 2005

DKS Associates
TRANSPORTATION SOLUTIONS
1400 SW 5TH Avenue, Suite 500
Portland, Oregon 97201-5902
Telephone: (503) 243-3500
Fax: (503) 243-1934

DESIGN & ENGINEERING DIVISION
NE 63RD STREET IMPROVEMENTS

SIGN SCHEDULE

proud past, promising future
CLARK COUNTY
WASHINGTON

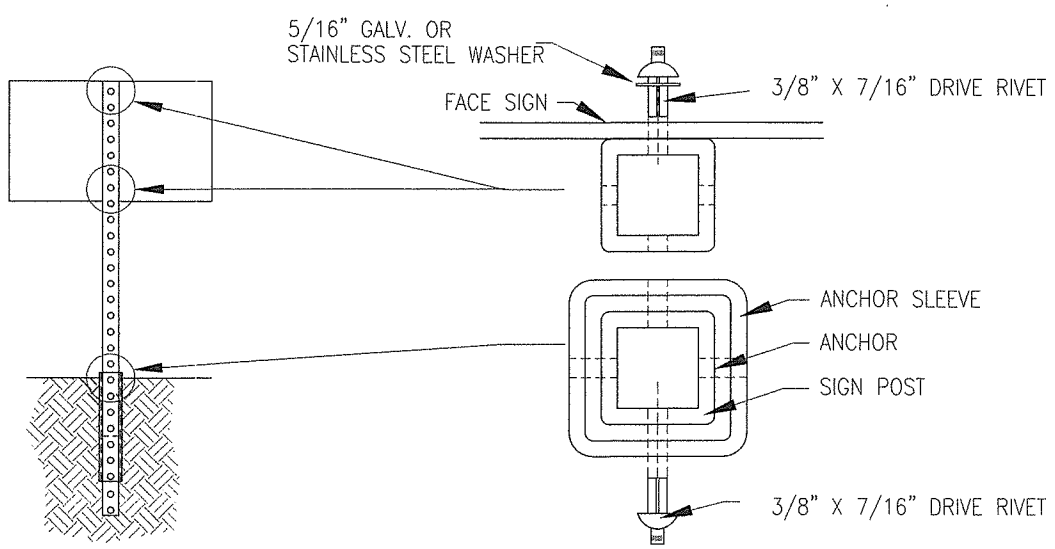

TYPICAL SIGN INSTALLATION

NTS

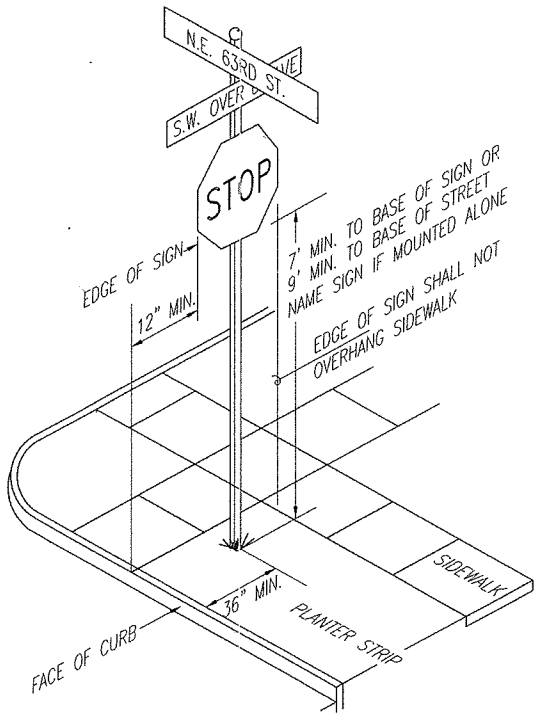

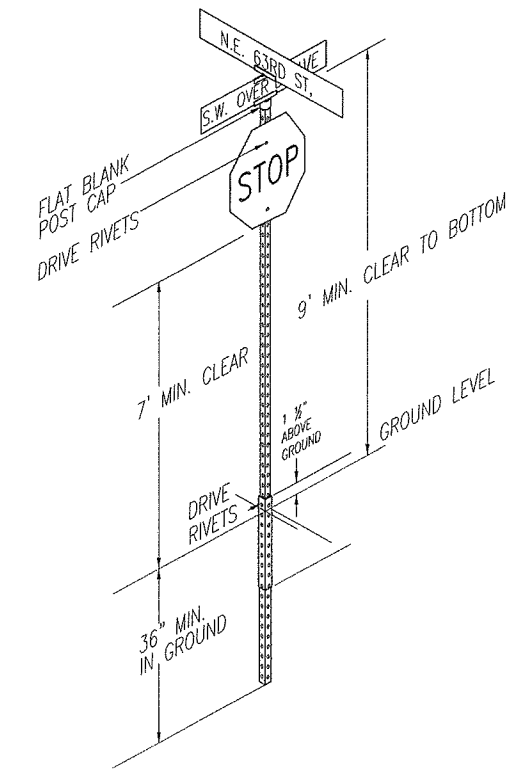

TYPICAL SIGN ASSEMBLY

NTS

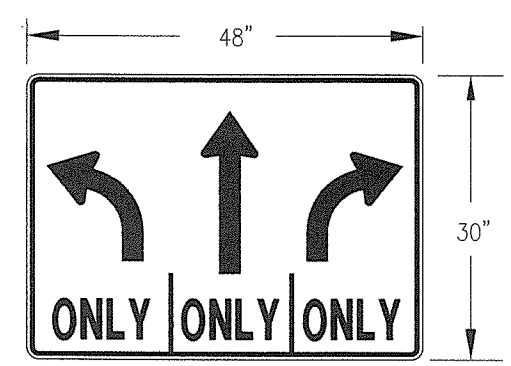

R3-8b (MUTCD)

GENERAL SIGNING NOTES:

1. ALL SIGNING SHALL CONFORM TO WASHINGTON STATE DEPARTMENT OF TRANSPORTATION'S SPECIFICATIONS (2004) AND THE MANUAL ON UNIFORM TRAFFIC CONTROL DEVICES.

95% SUBMITTAL
NOT FOR CONSTRUCTION

DESIGN & ENGINEERING DIVISION
NE 63RD STREET IMPROVEMENTS

SIGNING DETAILS

DKS Associates
TRANSPORTATION SOLUTIONS
1400 SW Fifth Avenue, Suite 500 Portland, Oregon 97201-5626
Telephone: (503) 243-3500
Fax: (503) 243-1934

proud past, promising future
CLARK COUNTY
WASHINGTON

PROFESSIONAL ENGINEER
STATE OF WASHINGTON
EXPIRES JAN. 30, 2005

CALL 48 HOURS BEFORE YOU DIG
1-800-424-5555
"It's the Law"
NORTHWEST UTILITIES NOTIFICATION CENTER

DESIGNED:	CTS
DRAWN:	JCLD
CRP:	330422
HORIZ.	
VERT.	
DATE:	08/27/2004
DWG:	T15
SHEET	67 OF 81

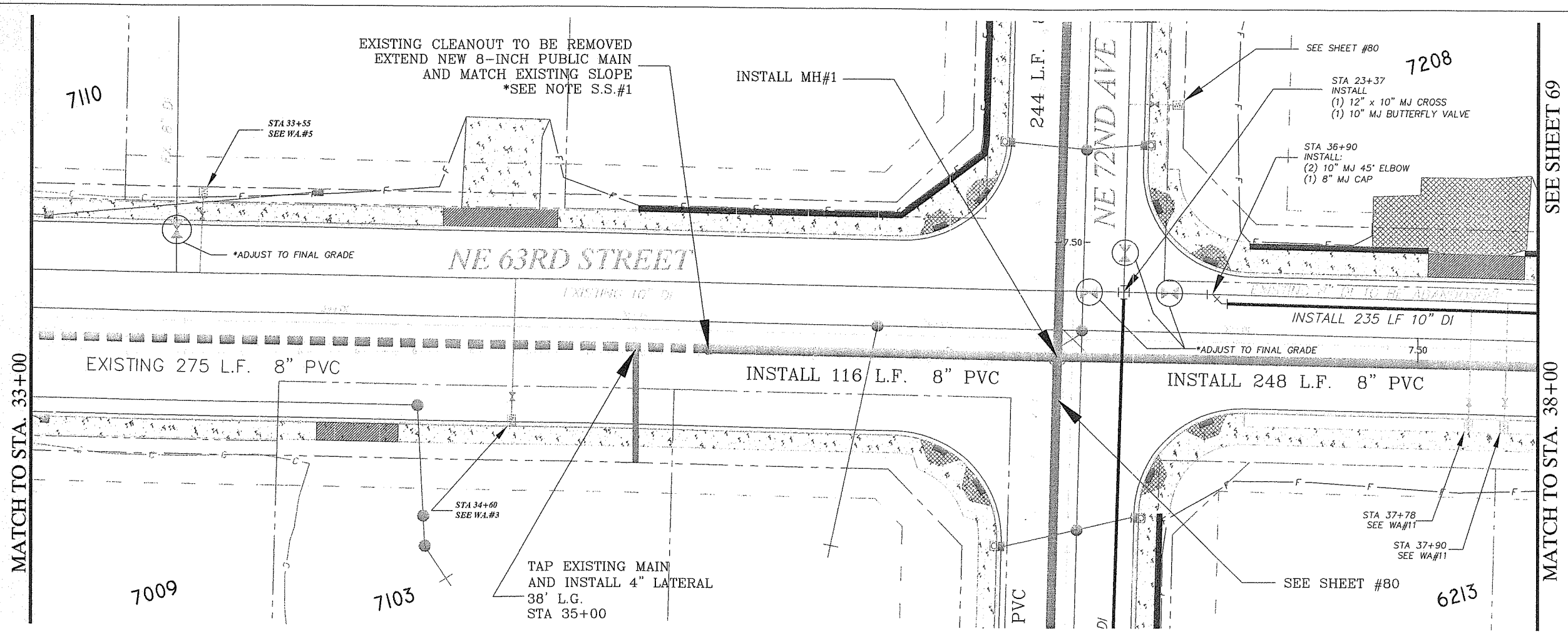

0 20 40

HORIZ. SCALE: 1"= 20'

CALL 48 HOURS BEFORE YOU DIG
696-4848
"It's the Law"
CLARK COUNTY UTILITIES COORDINATING COUNCIL

NOTES

S.S.#1 :
POTHOLE TO VERIFY IE PRIOR TO CONSTRUCTION. NOTIFY ENGINEER IF DIFFERENT THAN SHOWN.

WA.#3 :
REMOVE EXISTING WATER SERVICE AND INSTALL:
(1) SERVICE CAP

WA.#5:
RELOCATE EXISTING METER BOX TO NORTH SIDE OF SIDEWALK

WA.#11:
RELOCATE EXISTING METER BOX TO PLANTER STRIP AND CONNECT TO NEW 10" DI MAIN

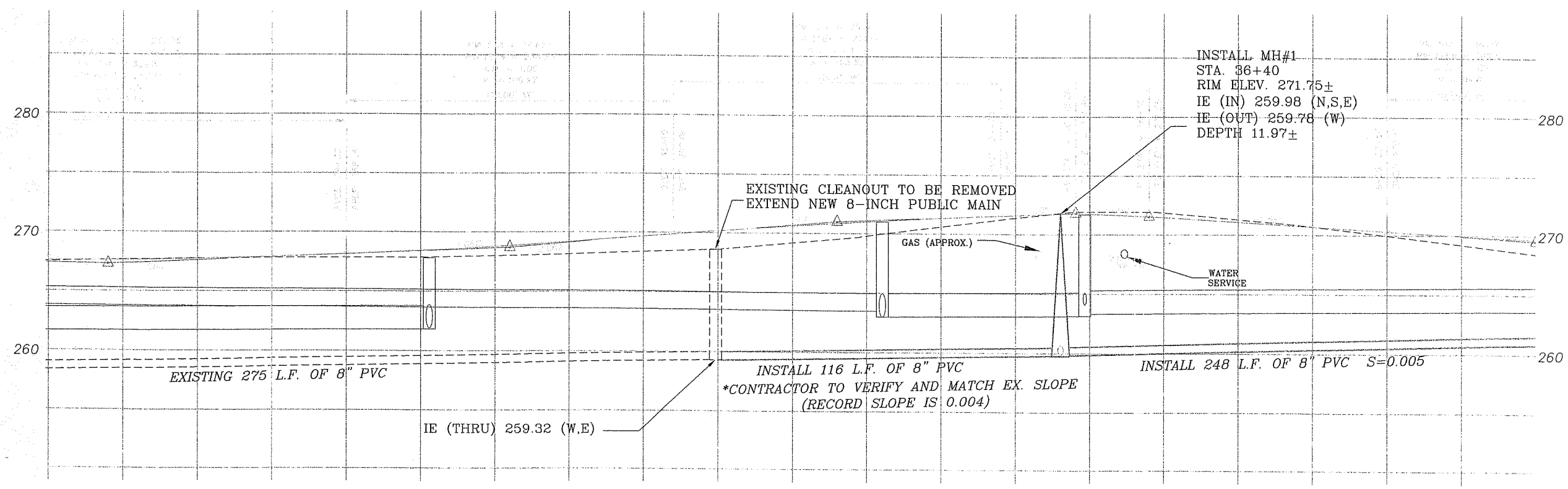

PROFILE NE 63rd ST.

FILE NAME: 083094Design.dwg	DATE: 08-27-2004
SCALE	DESIGNED BY: JJU/EJS
HORIZONTAL: 1" = 20'	DRAWN BY: JJU
VERTICAL: 1" = 5'	CHECKED BY: DLS/EJS
	APPROVED BY: VRE
DATE / No.	REVISIONS

ELAINE J. SPRAY — STATE OF WASHINGTON — 22534 — REGISTERED PROFESSIONAL ENGINEER — EXPIRES FEB. 7, 2005

DONALD L. SKAGGS — STATE OF WASHINGTON — 17951 — REGISTERED PROFESSIONAL ENGINEER — EXPIRES FEB 4, 2005

NE 63RD ST
WATER IMPROVEMENTS

CITY OF VANCOUVER DESIGN ENGINEERING
P.O Box 1995
Vancouver WA 98668
WATER:(360)696-8223

NE 63RD ST
SEWER IMPROVEMENTS

CITY OF VANCOUVER DESIGN ENGINEERING
P.O Box 1995
Vancouver WA 98668
SEWER:(360)696-8020

CITY OF VANCOUVER WASHINGTON

JOB NUMBER
083094

DWG. U01

SHEET 68 OF 81

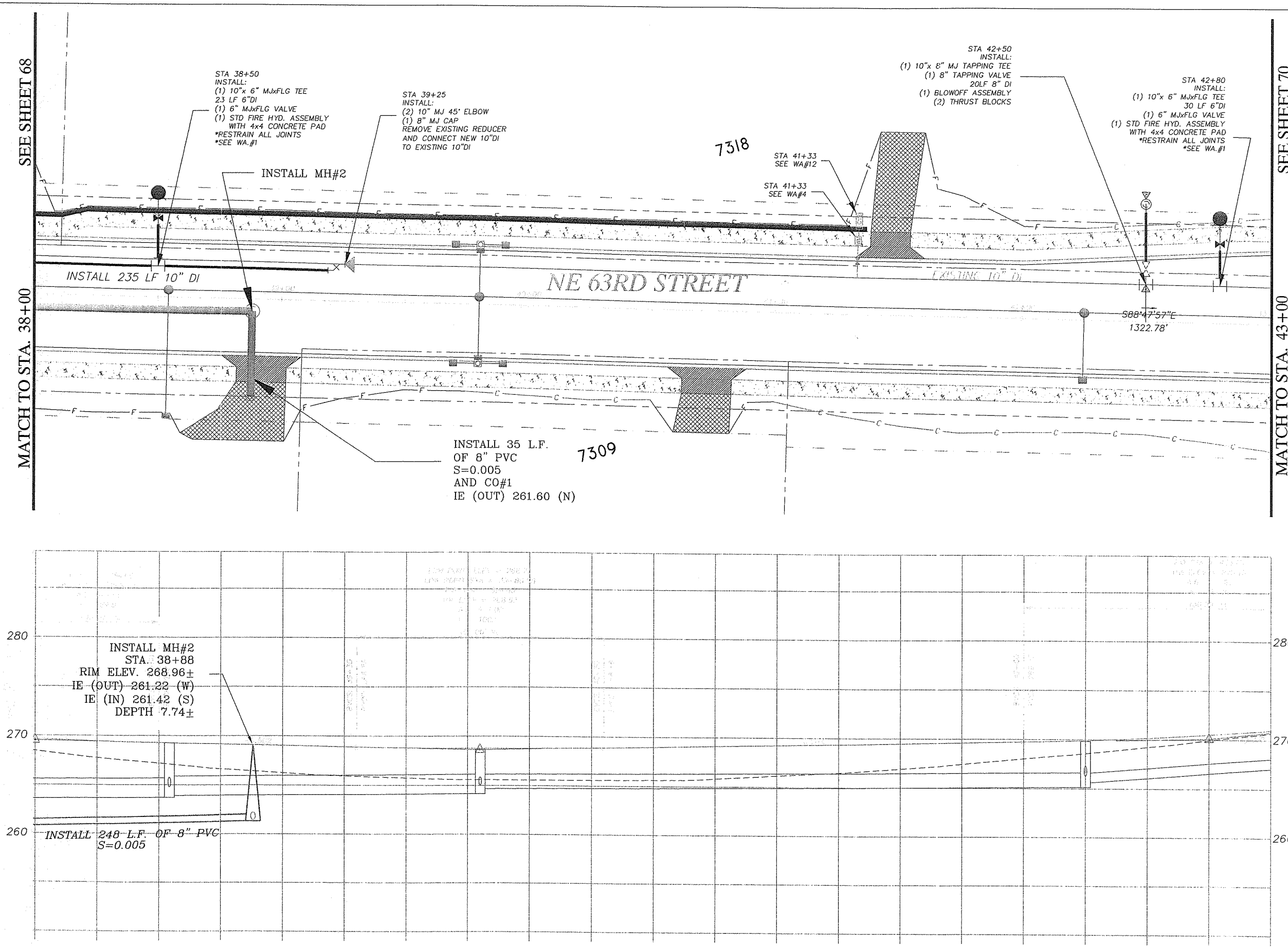

0 20 40
HORIZ. SCALE: 1"= 20'

NOTES

WA.#1 :
INSTALL NEW HYDRANT IN PLANTING STRIP BETWEEN CURB AND SIDEWALK

WA.#4:
RELOCATE EXISTING METER BOX TO PLANTER STRIP

WA.#12:
RELOCATE DOUBLE CHECK VALVE BOX

PROFILE NE 63rd ST.

CALL 48 HOURS BEFORE YOU DIG
696-4848
"It's the Law"
CLARK COUNTY UTILITIES COORDINATING COUNCIL

DATE:	08-27-2004
DESIGNED BY:	JJU/EJS
DRAWN BY:	JJU
CHECKED BY:	DLS/EJS
APPROVED BY:	VRE
REVISIONS	
DATE / No.	

FILE NAME: 083094Design.dwg
SCALE
HORIZONTAL: 1" = 20'
VERTICAL: 1" = 5'

ELAINE J. SPRAY, STATE OF WASHINGTON, 22534, REGISTERED PROFESSIONAL ENGINEER, EXPIRES FEB. 7, 2005

DONALD L. SKAGGS, STATE OF WASHINGTON, 17951, REGISTERED PROFESSIONAL ENGINEER, EXPIRES FEB 4, 2005

NE 63RD ST
WATER IMPROVEMENTS
CITY OF VANCOUVER DESIGN ENGINEERING
P.O Box 1995
Vancouver WA 98668
WATER:(360)696-8223

NE 63RD ST
SEWER IMPROVEMENTS
CITY OF VANCOUVER DESIGN ENGINEERING
P.O Box 1995
Vancouver WA 98668
SEWER:(360)696-8020

CITY OF VANCOUVER WASHINGTON

JOB NUMBER
083094

DWG. U02

SHEET 69 OF 81

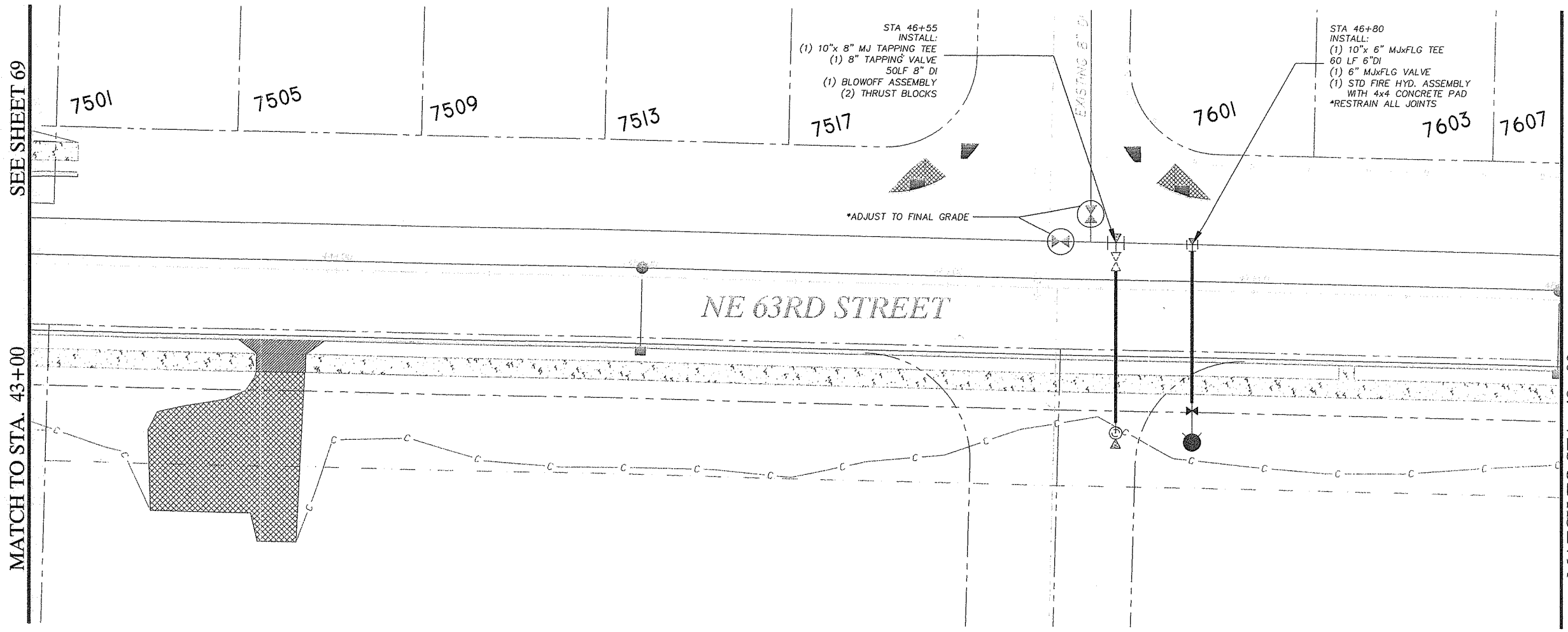

0 20 40

HORIZ. SCALE: 1"= 20'

NOTES

CALL 48 HOURS BEFORE YOU DIG
696-4848
"It's the Law"
CLARK COUNTY UTILITIES' COORDINATING COUNCIL

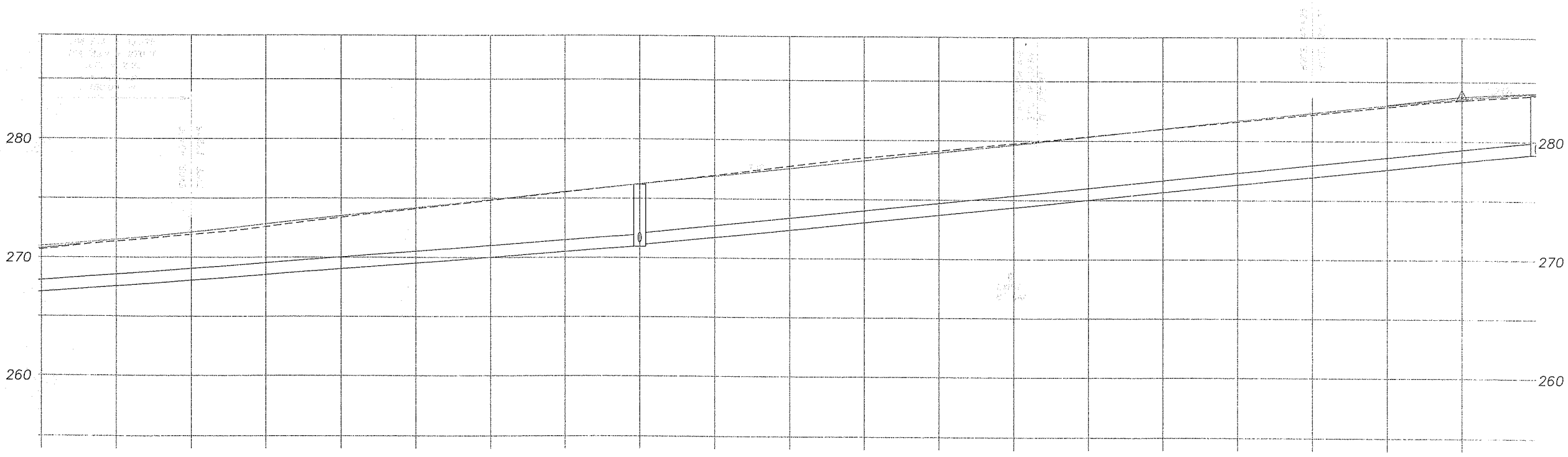

PROFILE NE 63rd ST.

FILE NAME: 083094Design.dwg
DATE: 08-27-2004
DESIGNED BY: JJU/EJS
DRAWN BY: JJU
CHECKED BY: DLS/EJS
APPROVED BY: VRE
SCALE
HORIZONTAL: 1" = 20'
VERTICAL: 1" = 5'
DATE | No. | REVISIONS

ELAINE J. SPRAY
STATE OF WASHINGTON
22534
REGISTERED PROFESSIONAL ENGINEER
EXPIRES FEB. 7, 2005

DONALD L. SKAGGS
STATE OF WASHINGTON
17951
REGISTERED PROFESSIONAL ENGINEER
EXPIRES FEB 4, 2005

NE 63RD ST
WATER IMPROVEMENTS
CITY OF VANCOUVER DESIGN ENGINEERING
P.O Box 1995
Vancouver WA 98668
WATER:(360)696-8223

NE 63RD ST
SEWER IMPROVEMENTS
CITY OF VANCOUVER DESIGN ENGINEERING
P.O Box 1995
Vancouver WA 98668
SEWER:(360)696-8020

CITY OF VANCOUVER WASHINGTON

JOB NUMBER
083094

DWG. U03

SHEET 70 OF 81

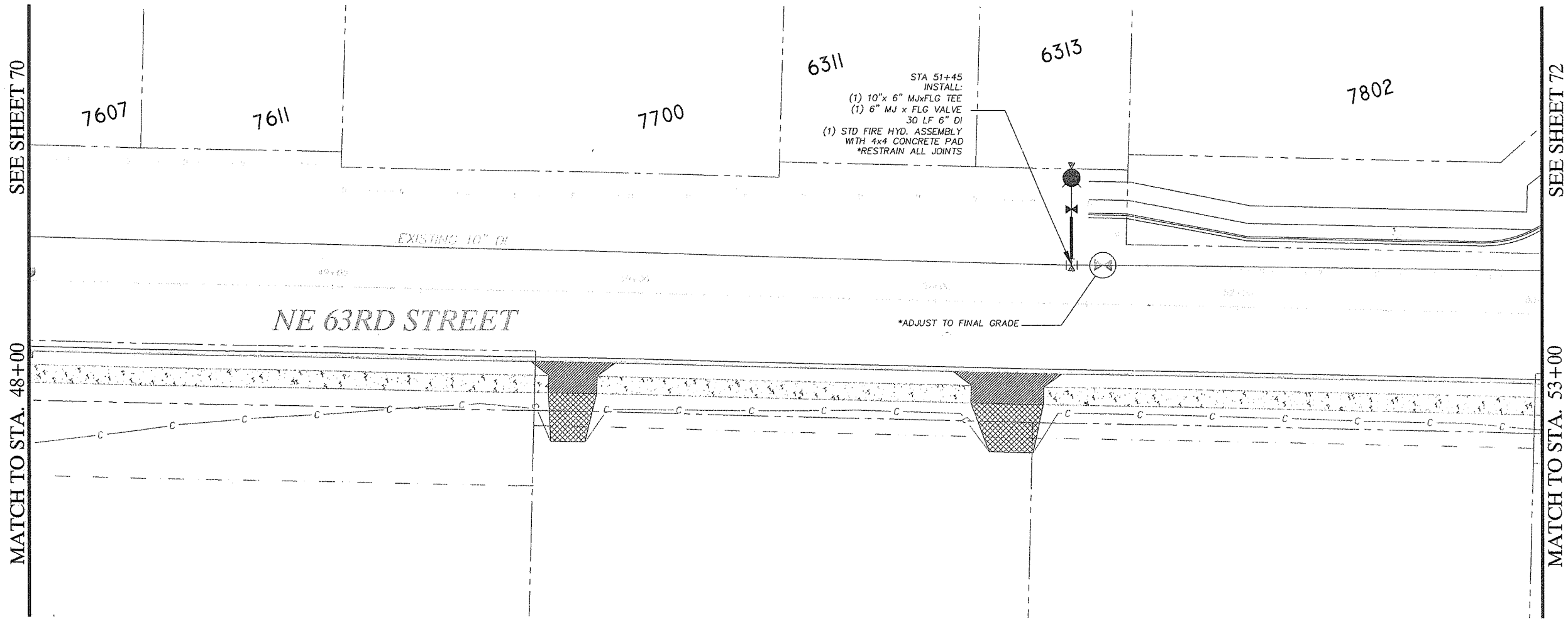

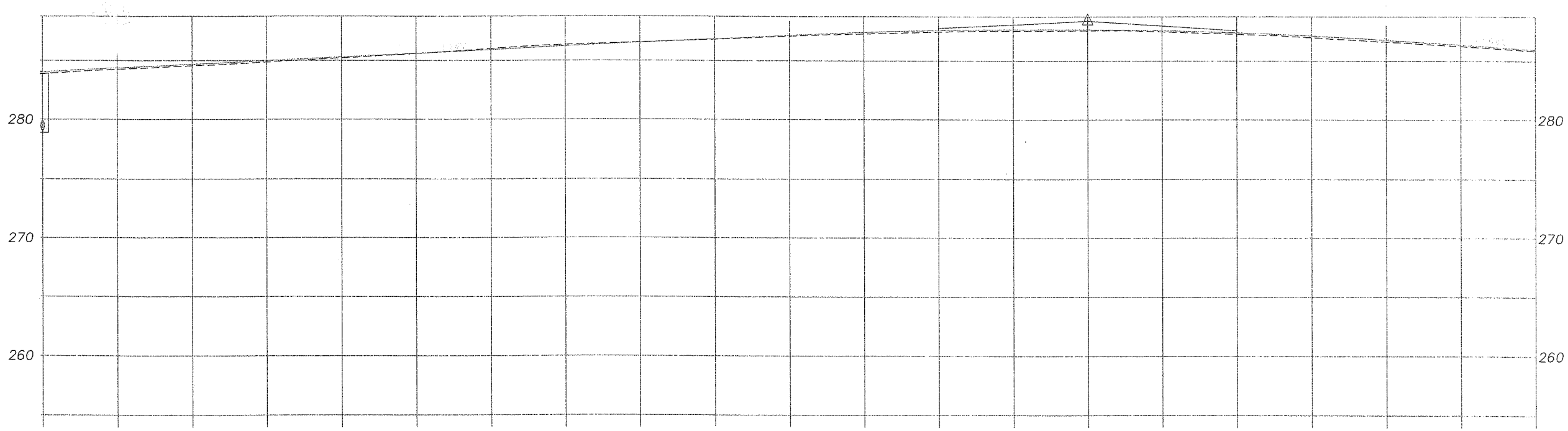

PROFILE NE 63rd ST.

0 20 40
HORIZ. SCALE: 1"= 20'

NOTES

CALL 48 HOURS BEFORE YOU DIG
696-4848
"It's the Law"
CLARK COUNTY UTILITIES COORDINATING COUNCIL

DATE: 08-27-2004
DESIGNED BY: JJU/EJS
DRAWN BY: JJU
CHECKED BY: DLS/EJS
APPROVED BY: VRE
REVISIONS

FILE NAME: 083094Design.dwg
SCALE
HORIZONTAL: 1" = 20'
VERTICAL: 1" = 5'

DATE	No.

ELAINE J. SPRAY
STATE OF WASHINGTON
22534
REGISTERED PROFESSIONAL ENGINEER
EXPIRES FEB. 7, 2005

DONALD L. SKAGGS
STATE OF WASHINGTON
17951
REGISTERED PROFESSIONAL ENGINEER
EXPIRES FEB 4, 2005

NE 63RD ST
WATER IMPROVEMENTS
CITY OF VANCOUVER DESIGN ENGINEERING
P.O Box 1995
Vancouver WA 98668
WATER:(360)696-8223

NE 63RD ST
SEWER IMPROVEMENTS
CITY OF VANCOUVER DESIGN ENGINEERING
P.O Box 1995
Vancouver WA 98668
SEWER:(360)696-8020

CITY OF VANCOUVER
WASHINGTON

JOB NUMBER
083094

DWG. U04

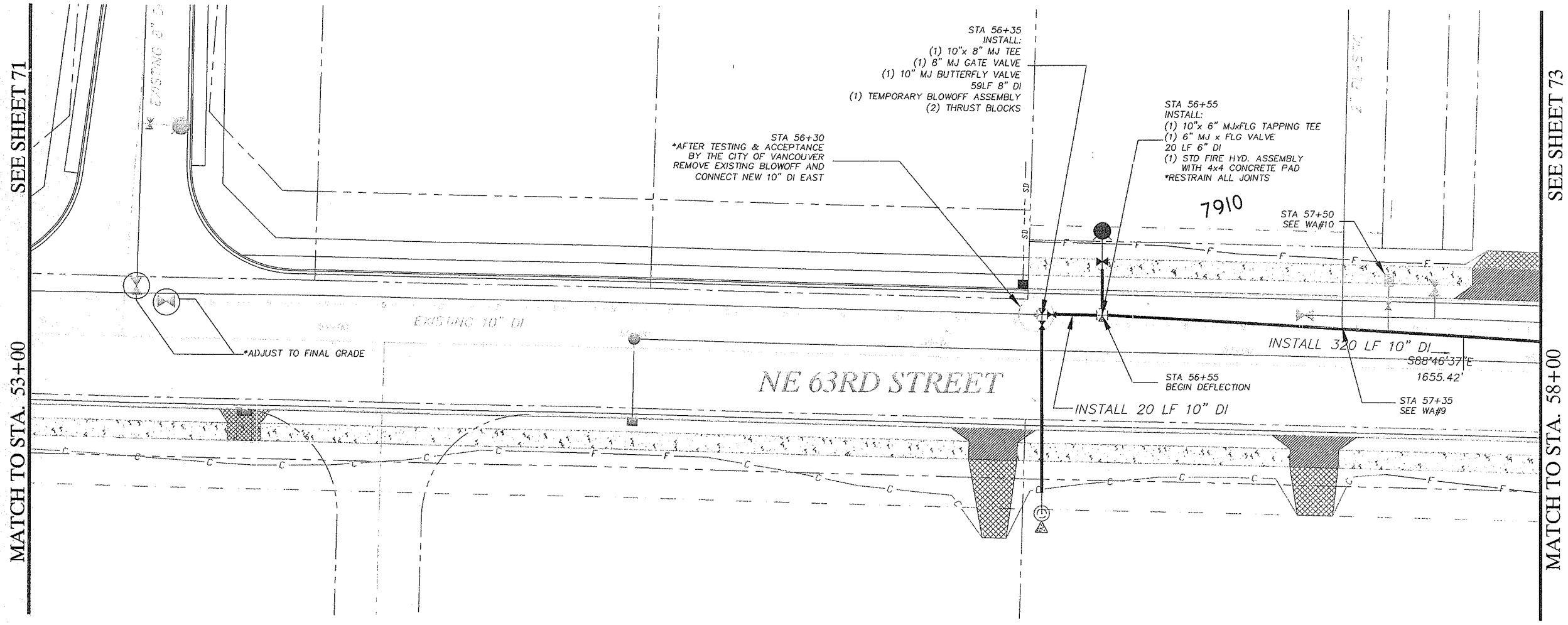

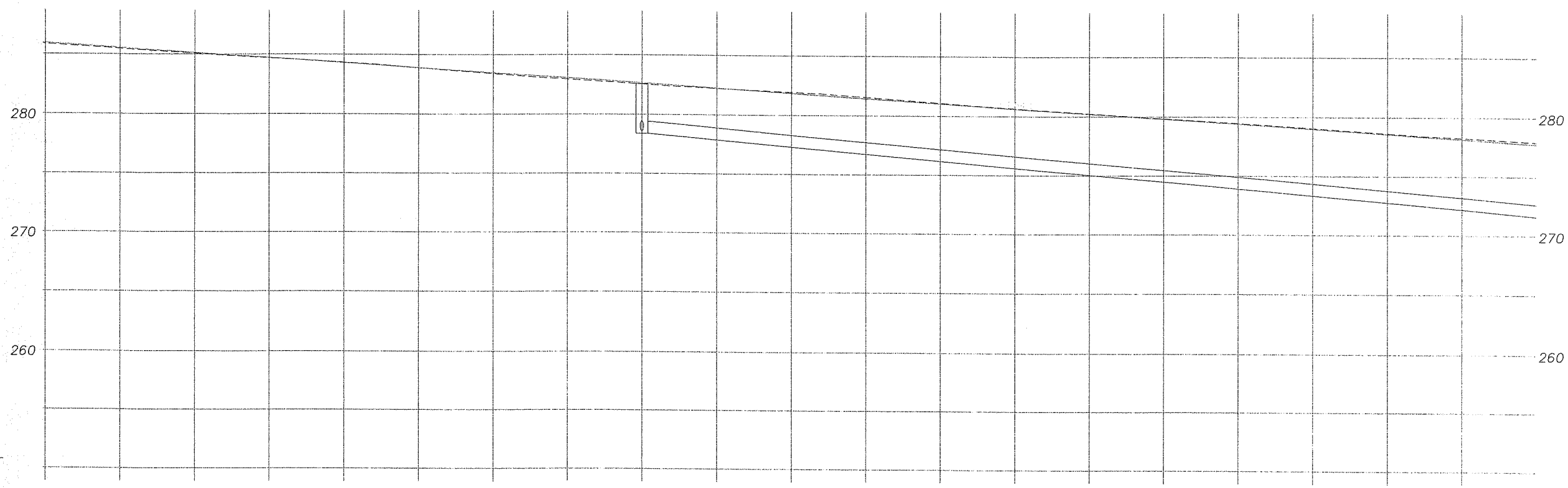

PROFILE NE 63rd ST.

0 20 40
HORIZ. SCALE: 1"= 20'

NOTES

WA.#9:
TRANSFER 2" SERVICE TO NEW 10" DI MAIN AND CAP OLD SERVICE

WA.#10:
RELOCATE EXISTING METER BOX TO PLANTER STRIP AND CONNECT TO NEW 10" DI MAIN

CALL 48 HOURS BEFORE YOU DIG
696-4848
"It's the Law"
CLARK COUNTY UTILITIES COORDINATING COUNCIL

FILE NAME: 083094Design.dwg
DATE: 08-27-2004
DESIGNED BY: JJU/EJS
DRAWN BY: JJU
CHECKED BY: DLS/EJS
APPROVED BY: VRE
SCALE
HORIZONTAL: 1" = 20'
VERTICAL: 1" = 5'
REVISIONS
DATE | No.

ELAINE J. SPRAY
STATE OF WASHINGTON
22534
REGISTERED PROFESSIONAL ENGINEER
EXPIRES FEB. 7, 2005

DONALD L. SKAGGS
STATE OF WASHINGTON
17951
REGISTERED PROFESSIONAL ENGINEER
EXPIRES FEB 4, 2005

NE 63RD ST
WATER IMPROVEMENTS
CITY OF VANCOUVER DESIGN ENGINEERING
P.O Box 1995
Vancouver WA 98668
WATER:(360)696-8223

NE 63RD ST
SEWER IMPROVEMENTS
CITY OF VANCOUVER DESIGN ENGINEERING
P.O Box 1995
Vancouver WA 98668
SEWER:(360)696-8020

CITY OF VANCOUVER WASHINGTON

JOB NUMBER
083094

DWG. U05

SHEET 72 OF 81

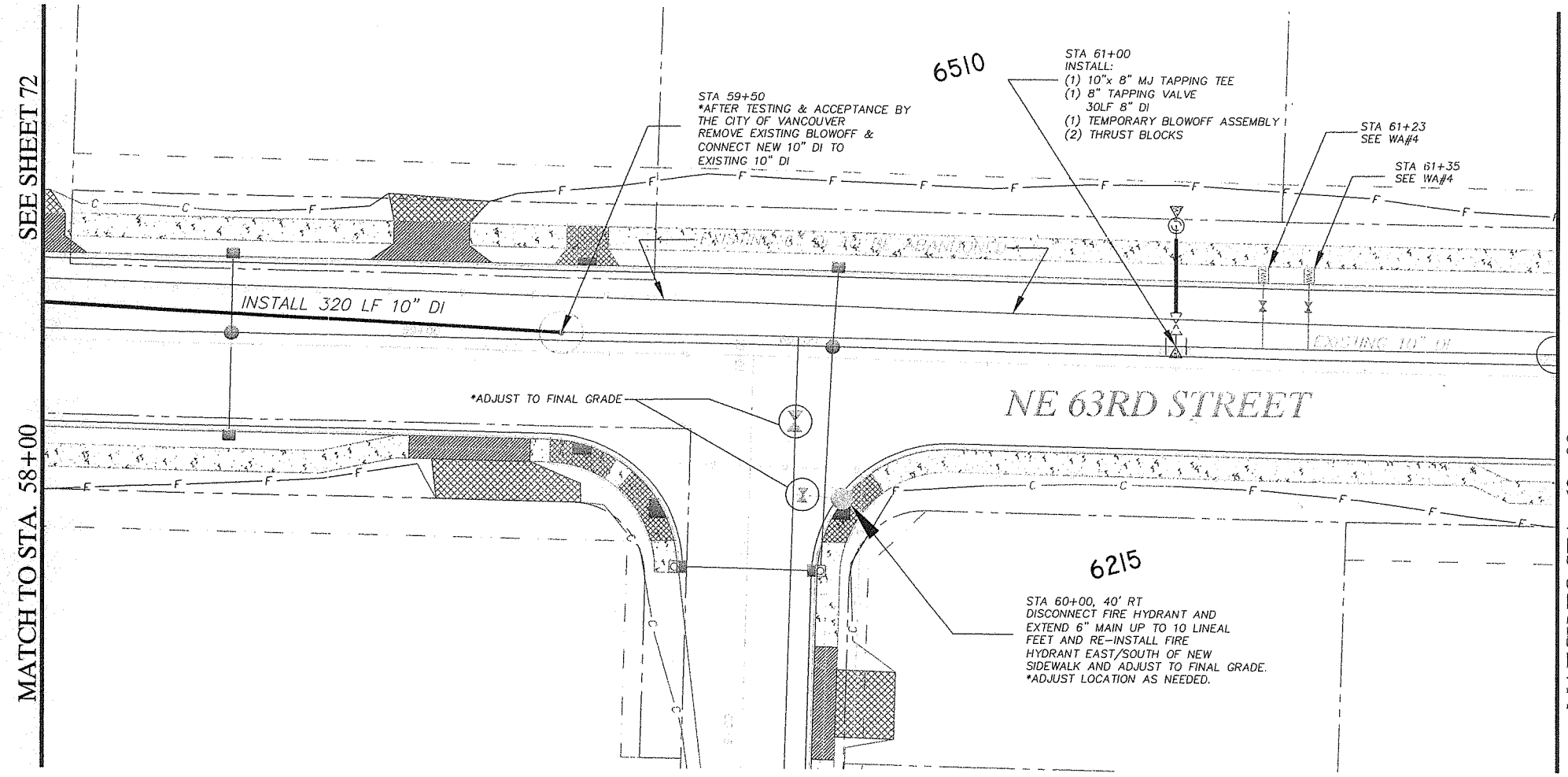

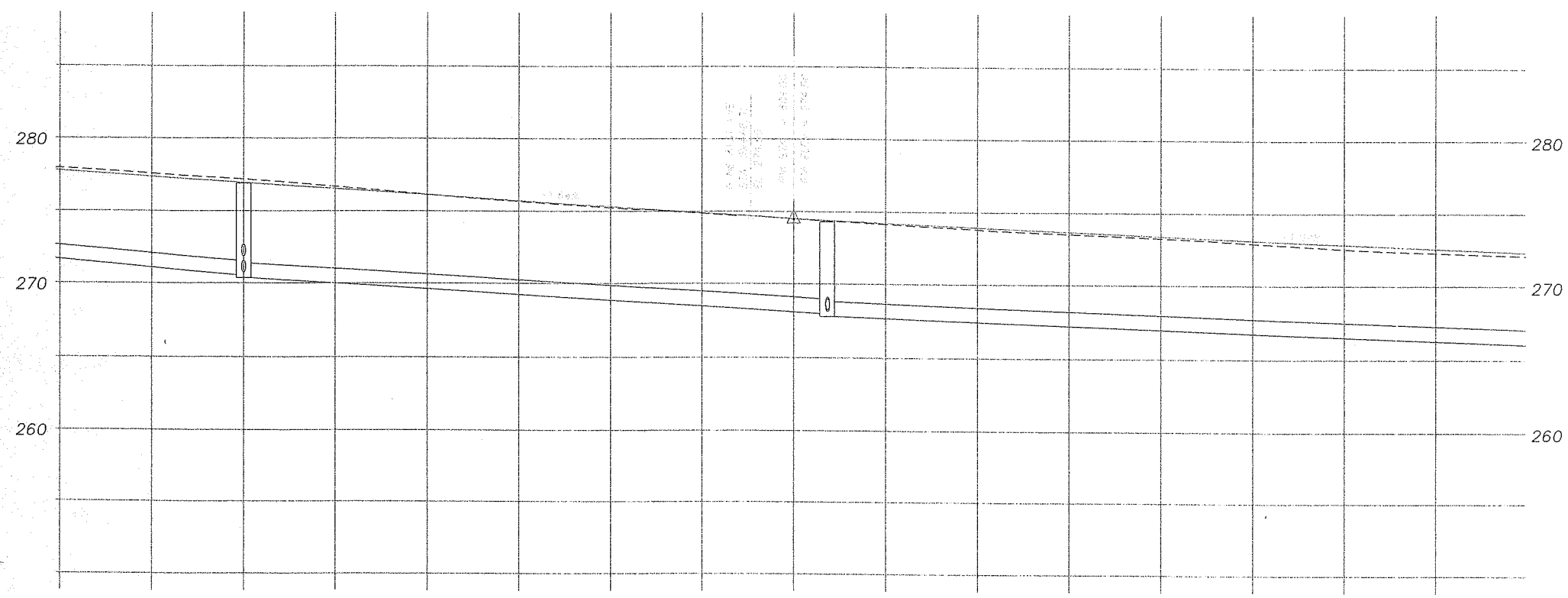

PROFILE NE 63rd ST.

0 20 40
HORIZ. SCALE: 1"= 20'

NOTES

WA.#4:
RELOCATE EXISTING METER BOX TO PLANTER STRIP

CALL 48 HOURS BEFORE YOU DIG
696-4848
"It's the Law"
CLARK COUNTY UTILITIES COORDINATING COUNCIL

FILE NAME: 083094Design.dwg
DATE: 08-27-2004
DESIGNED BY: JJU/EJS
DRAWN BY: JJU
CHECKED BY: DLS/EJS
APPROVED BY: VRE
SCALE
HORIZONTAL: 1" = 20'
VERTICAL: 1" = 5'
REVISIONS
DATE | No.

ELAINE L. SPRAY STATE OF WASHINGTON 22534 REGISTERED PROFESSIONAL ENGINEER
EXPIRES FEB. 7, 2005

DONALD L. SKAGGS STATE OF WASHINGTON 17951 REGISTERED PROFESSIONAL ENGINEER
EXPIRES FEB 4, 2005

NE 63RD ST
WATER IMPROVEMENTS
CITY OF VANCOUVER DESIGN ENGINEERING
P.O Box 1995
Vancouver WA 98668
WATER:(360)696-8223

NE 63RD ST
SEWER IMPROVEMENTS
CITY OF VANCOUVER DESIGN ENGINEERING
P.O Box 1995
Vancouver WA 98668
SEWER:(360)696-8020

CITY OF VANCOUVER WASHINGTON

JOB NUMBER
083094

DWG. U06
SHEET 73 OF 81

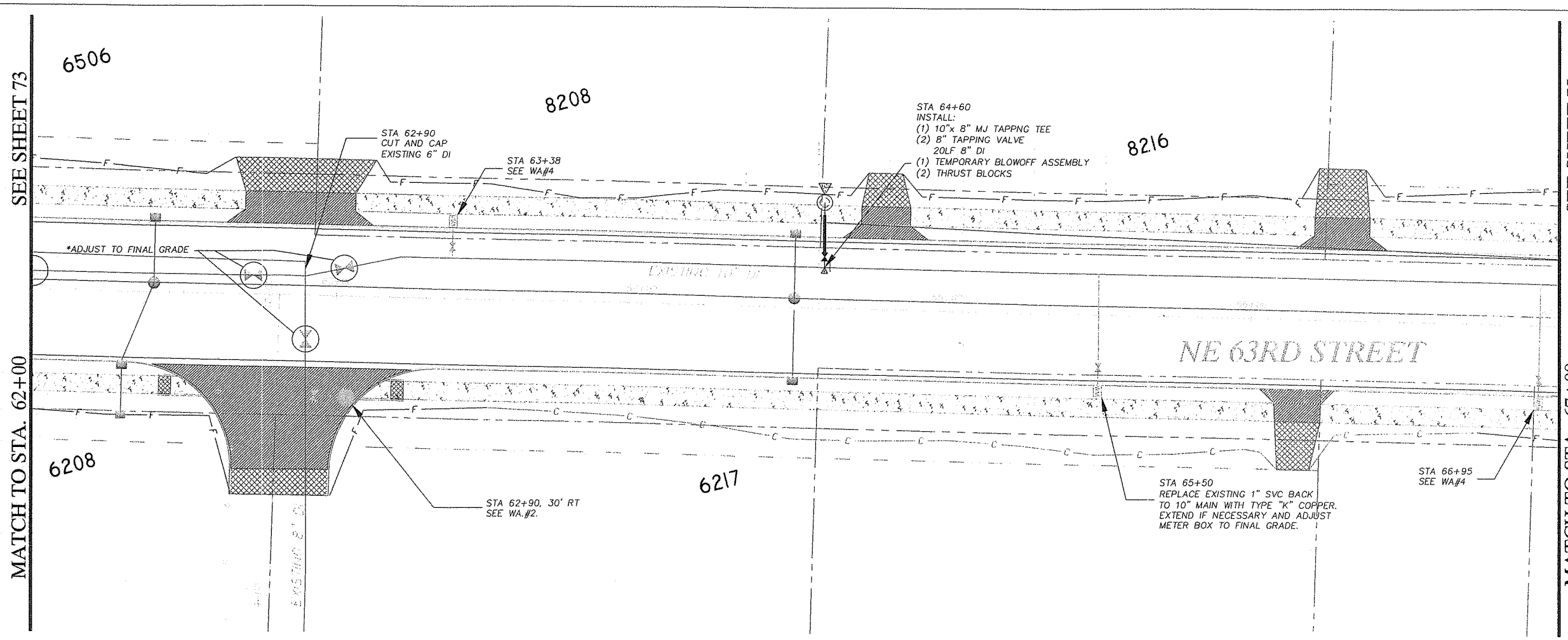

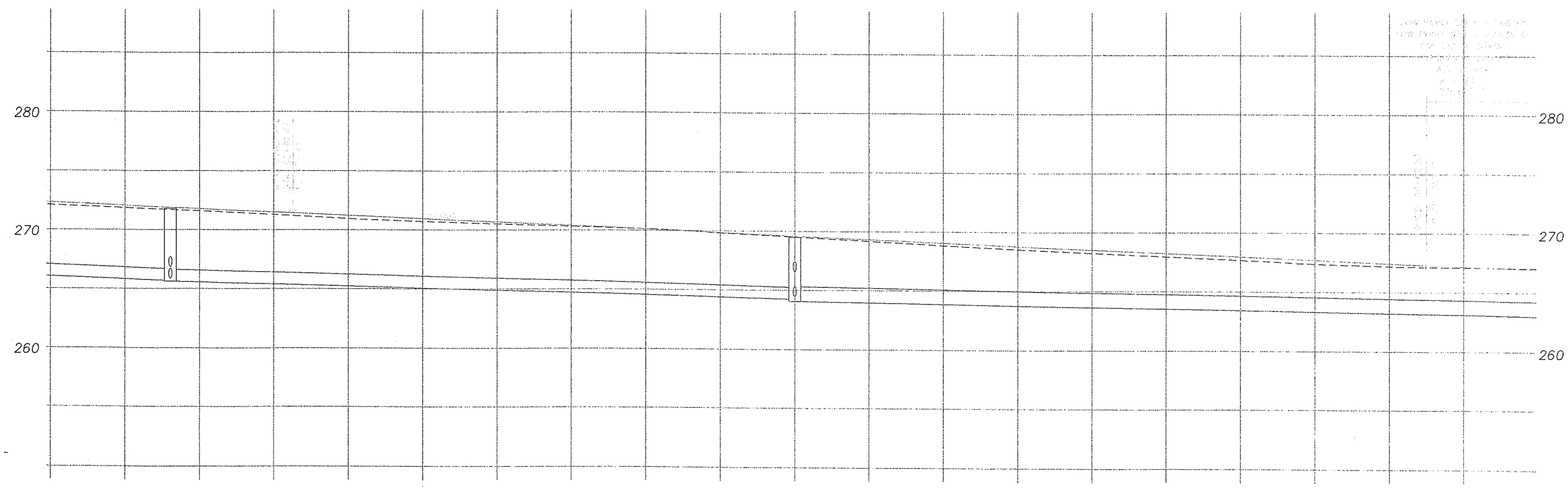

PROFILE NE 63rd ST.

0 20 40
HORIZ. SCALE: 1"= 20'

CALL 48 HOURS
BEFORE YOU DIG
696-4848
"It's the Law"
CLARK COUNTY
UTILITIES
COORDINATING COUNCIL

NOTES

WA.#2 :
DISCONNECT FIRE HYDRANT AND EXTEND 6" MAIN UP TO 10 LINEAL FEET AND RE-INSTALL FIRE HYDRANT EAST OF DRIVEWAY AND ADJUST TO FINAL GRADE.

WA.#4:
RELOCATE EXISTING METER BOX TO PLANTER STRIP

DATE:	08-27-2004
DESIGNED BY:	JJU/EJS
DRAWN BY:	JJU
CHECKED BY:	DLS/EJS
APPROVED BY:	VRE
FILE NAME: 083094Design.dwg	
SCALE HORIZONTAL:	1" = 20'
SCALE VERTICAL:	1" = 5'

REVISIONS

DATE	No.

ELAINE L. SPRAY, STATE OF WASHINGTON, REGISTERED PROFESSIONAL ENGINEER, 22534, EXPIRES FEB. 7, 2005

DONALD L. SKAGGS, STATE OF WASHINGTON, REGISTERED PROFESSIONAL ENGINEER, 17951, EXPIRES FEB 4, 2005

NE 63RD ST
WATER IMPROVEMENTS

CITY OF VANCOUVER DESIGN ENGINEERING
P.O Box 1995
Vancouver WA 98668
WATER:(360)696-8223

NE 63RD ST
SEWER IMPROVEMENTS

CITY OF VANCOUVER DESIGN ENGINEERING
P.O Box 1995
Vancouver WA 98668
SEWER:(360)696-8020

CITY OF VANCOUVER
WASHINGTON

JOB NUMBER
083094

DWG. U07

SHEET 74 OF 81

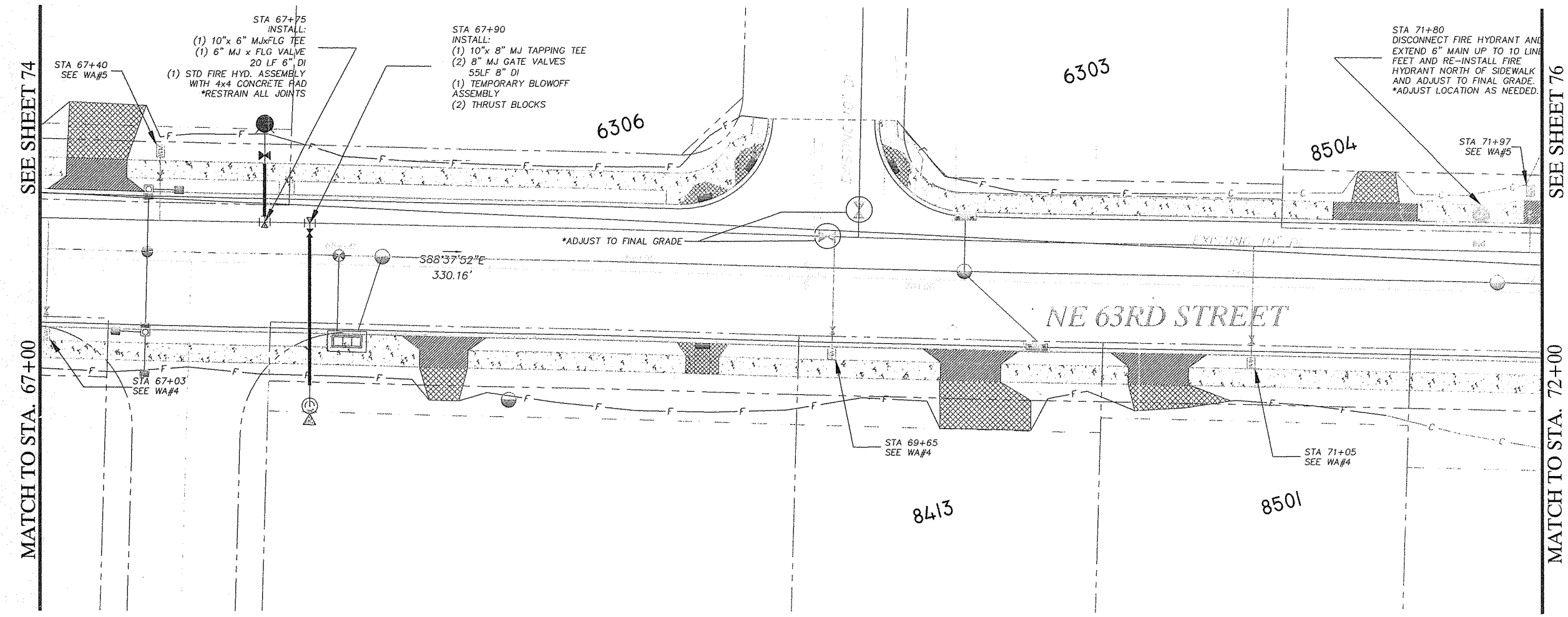

0 20 40

HORIZ. SCALE: 1"= 20'

NOTES

WA.#4:
RELOCATE EXISTING METER BOX TO PLANTER STRIP

WA.#5:
RELOCATE EXISTING METER BOX TO NORTH SIDE OF SIDEWALK

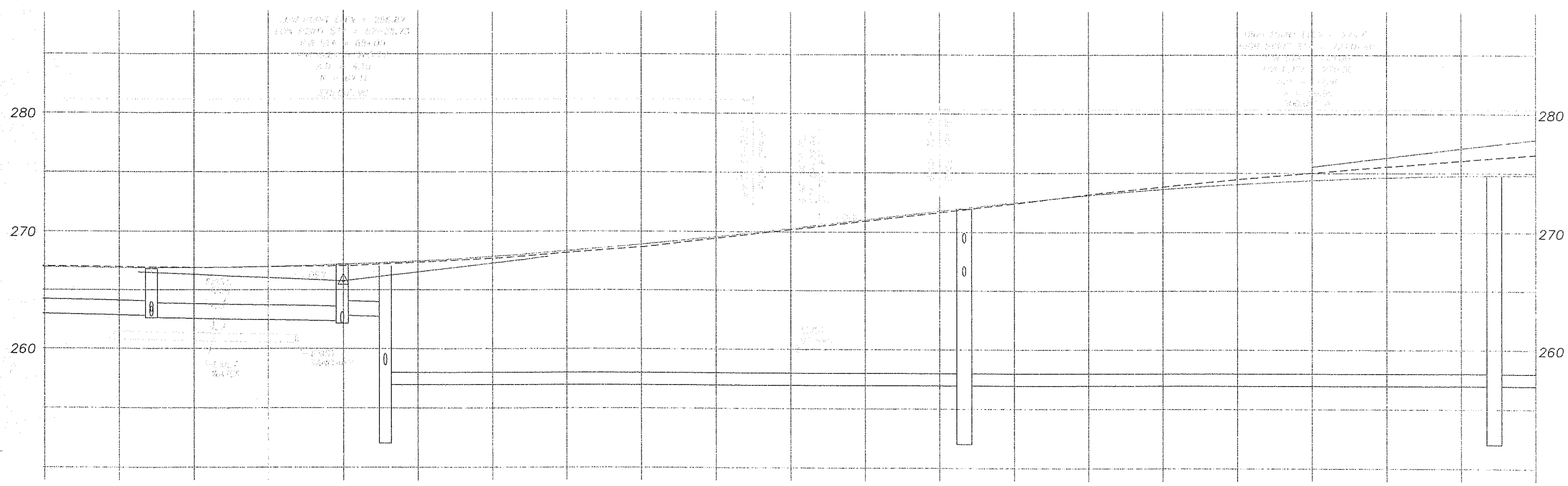

PROFILE NE 63rd ST.

CALL 48 HOURS BEFORE YOU DIG
696-4848
"It's the Law"
CLARK COUNTY UTILITIES COORDINATING COUNCIL

FILE NAME: 083094Design.dwg
SCALE
HORIZONTAL: 1" = 20'
VERTICAL: 1" = 5'

DATE: 08-27-2004
DESIGNED BY: JJU/EJS
DRAWN BY: JJU
CHECKED BY: DLS/EJS
APPROVED BY: VRE

REVISIONS

DATE	No.	

ELAINE J. SPRAY
STATE OF WASHINGTON
22534
REGISTERED PROFESSIONAL ENGINEER
EXPIRES FEB. 7, 2005

DONALD L. SKAGGS
STATE OF WASHINGTON
17951
REGISTERED PROFESSIONAL ENGINEER
EXPIRES FEB 4, 2005

NE 63RD ST
WATER IMPROVEMENTS

CITY OF VANCOUVER DESIGN ENGINEERING
P.O Box 1995
Vancouver WA 98668
WATER:(360)696-8223

NE 63RD ST
SEWER IMPROVEMENTS

CITY OF VANCOUVER DESIGN ENGINEERING
P.O Box 1995
Vancouver WA 98668
SEWER:(360)696-8020

CITY OF VANCOUVER
WASHINGTON

JOB NUMBER
083094

DWG. U08

SHEET 75 OF 81

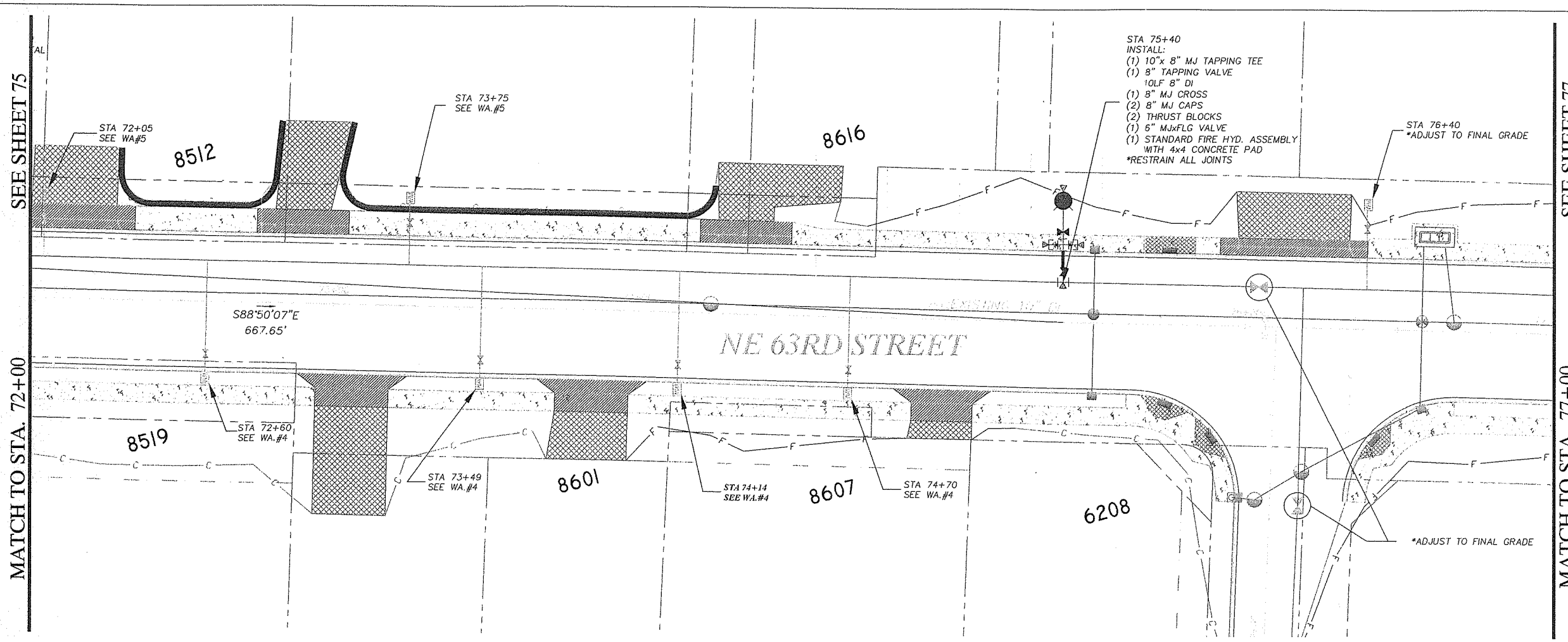

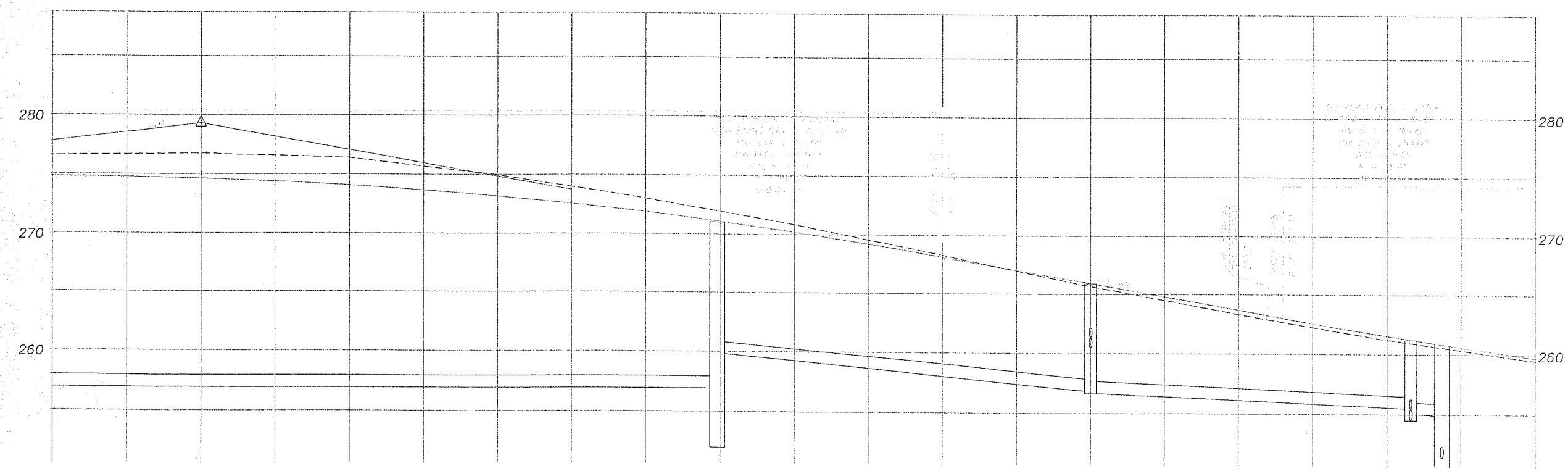

PROFILE NE 63rd ST.

0 20 40
HORIZ. SCALE: 1"= 20'

NOTES

WA.#2 :
DISCONNECT FIRE HYDRANT AND EXTEND 6" MAIN UP TO 10 LINEAL FEET AND RE-INSTALL FIRE HYDRANT EAST OF DRIVEWAY AND ADJUST TO FINAL GRADE.

WA.#4:
RELOCATE EXISTING METER BOX TO PLANTER STRIP

WA.#5:
RELOCATE EXISTING METER BOX TO NORTH SIDE OF SIDEWALK

CALL 48 HOURS BEFORE YOU DIG
696-4848
"It's the Law"
CLARK COUNTY UTILITIES COORDINATING COUNCIL

FILE NAME: 083094Design.dwg
DATE: 08-27-2004
DESIGNED BY: JJU/EJS
DRAWN BY: JJU
CHECKED BY: DLS/EJS
APPROVED BY: VRE
SCALE
HORIZONTAL: 1" = 20'
VERTICAL: 1" = 5'
REVISIONS
DATE | No.

STATE OF WASHINGTON EDWARD J. SPRAY 22254 REGISTERED PROFESSIONAL ENGINEER
EXPIRES FEB. 7, 2005

STATE OF WASHINGTON DONALD L. SKAGGS 17951 REGISTERED PROFESSIONAL ENGINEER
EXPIRES FEB 4, 2005

NE 63RD ST
WATER IMPROVEMENTS
CITY OF VANCOUVER DESIGN ENGINEERING
P.O Box 1995
Vancouver WA 98668
WATER:(360)696-8223

NE 63RD ST
SEWER IMPROVEMENTS
CITY OF VANCOUVER DESIGN ENGINEERING
P.O Box 1995
Vancouver WA 98668
SEWER:(360)696-8020

CITY OF VANCOUVER WASHINGTON

JOB NUMBER
083094

DWG. U09

SHEET 76 OF 81

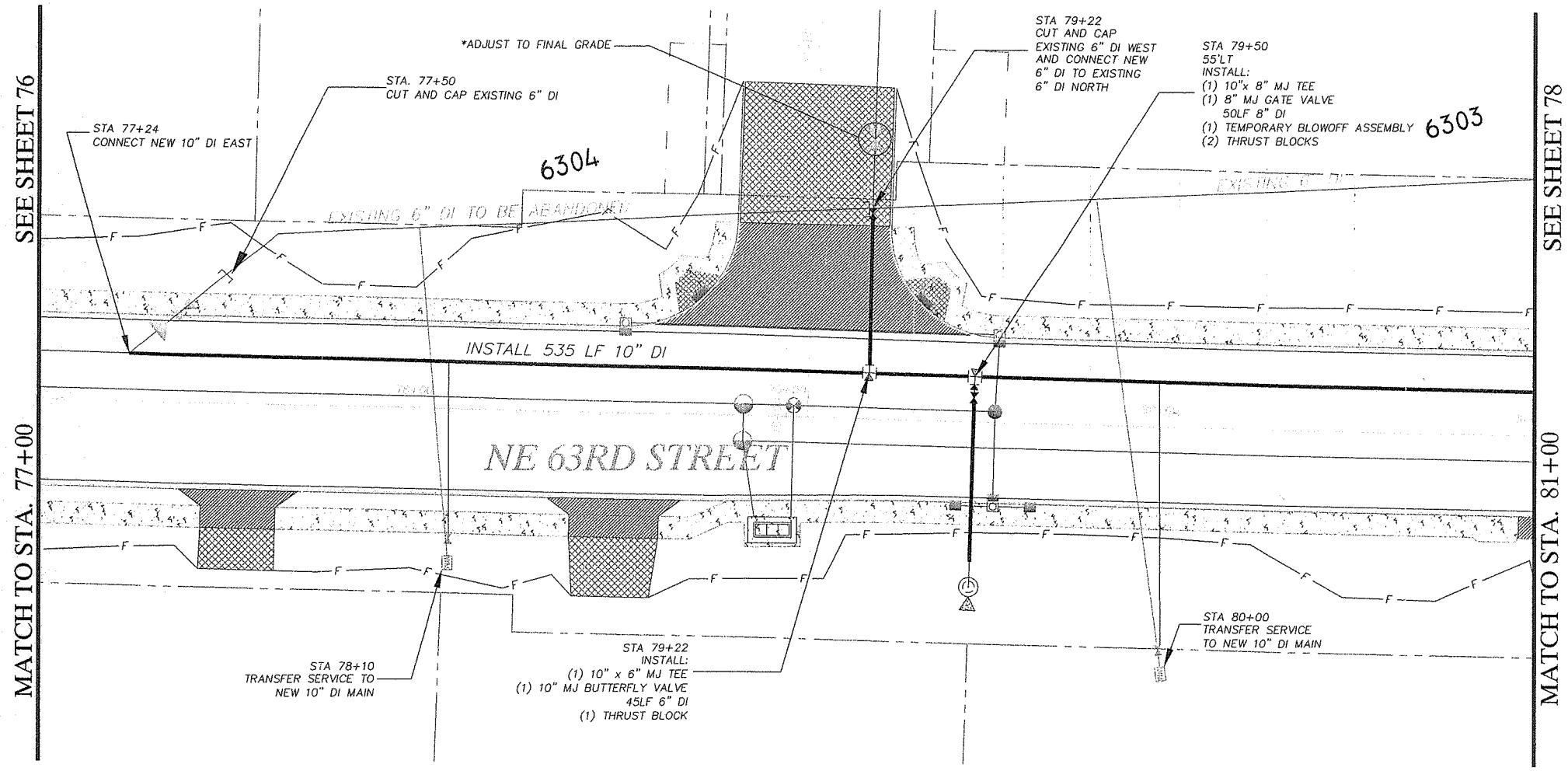

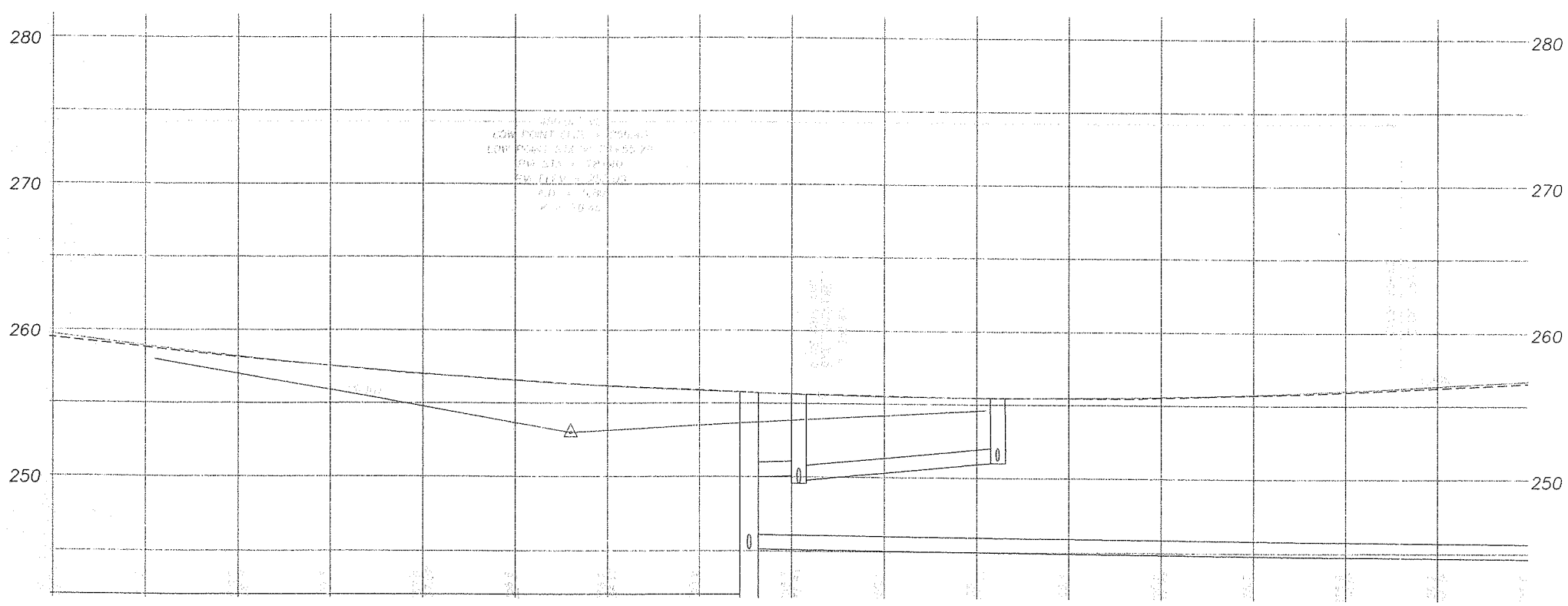

PROFILE NE 63rd ST.

0 20 40

HORIZ. SCALE: 1"= 20'

NOTES

CALL 48 HOURS BEFORE YOU DIG
696-4848
"It's the Law"
CLARK COUNTY UTILITIES COORDINATING COUNCIL

FILE NAME: 083094Design.dwg
DATE: 08-27-2004
DESIGNED BY: JJU/EJS
DRAWN BY: JJU
CHECKED BY: DLS/EJS
APPROVED BY: VRE
SCALE
HORIZONTAL: 1" = 20'
VERTICAL: 1" = 5'
REVISIONS
DATE | No.

ELAINE L. SPRAY, STATE OF WASHINGTON, 22534, REGISTERED PROFESSIONAL ENGINEER, EXPIRES FEB. 7, 2005

DONALD L. SKAGGS, STATE OF WASHINGTON, 17951, REGISTERED PROFESSIONAL ENGINEER, EXPIRES FEB 4, 2005

NE 63RD ST
WATER IMPROVEMENTS
CITY OF VANCOUVER DESIGN ENGINEERING
P.O Box 1995
Vancouver WA 98668
WATER:(360)696-8223

NE 63RD ST
SEWER IMPROVEMENTS
CITY OF VANCOUVER DESIGN ENGINEERING
P.O Box 1995
Vancouver WA 98668
SEWER:(360)696-8020

CITY OF VANCOUVER WASHINGTON

JOB NUMBER
083094

DWG. U10

SHEET 77 OF 81

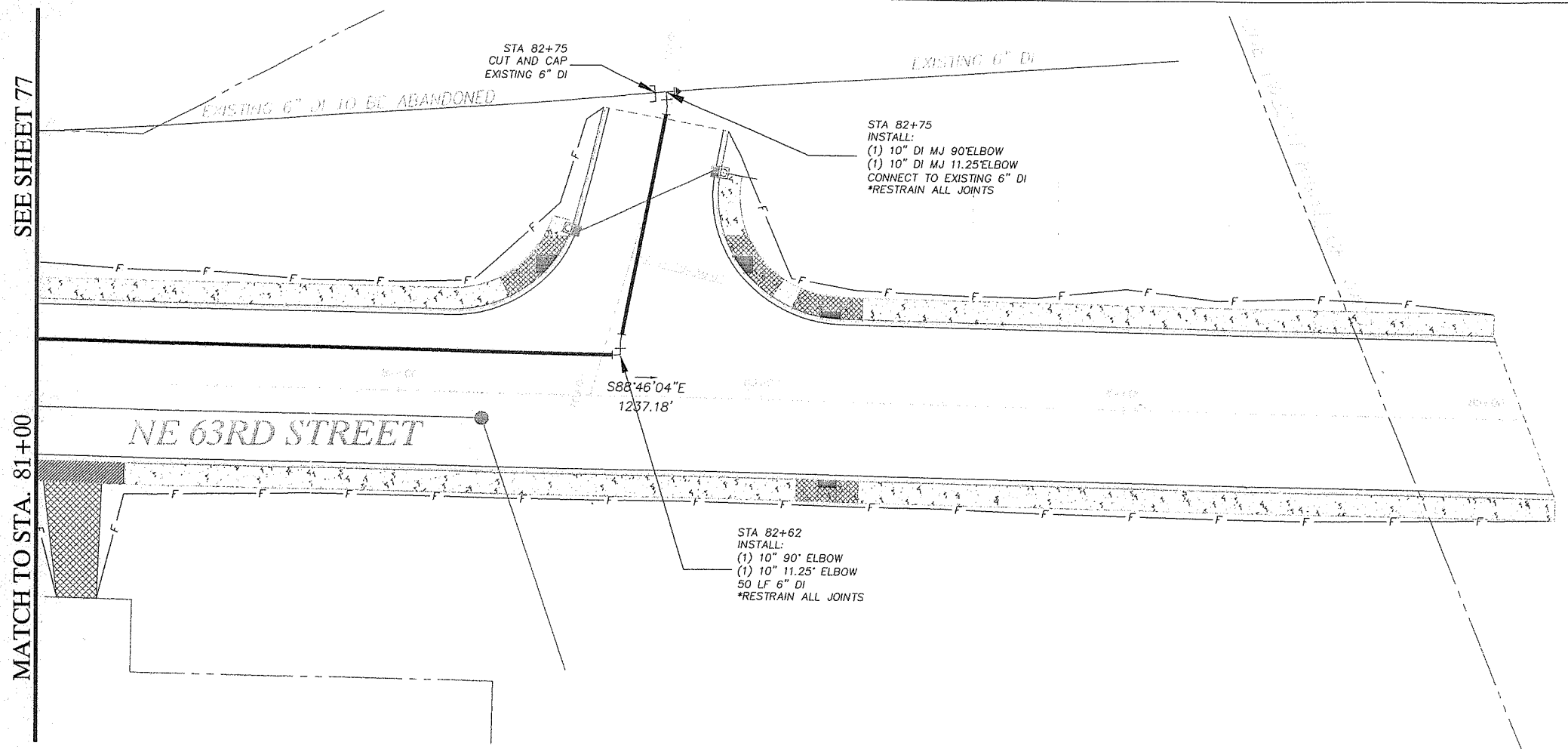

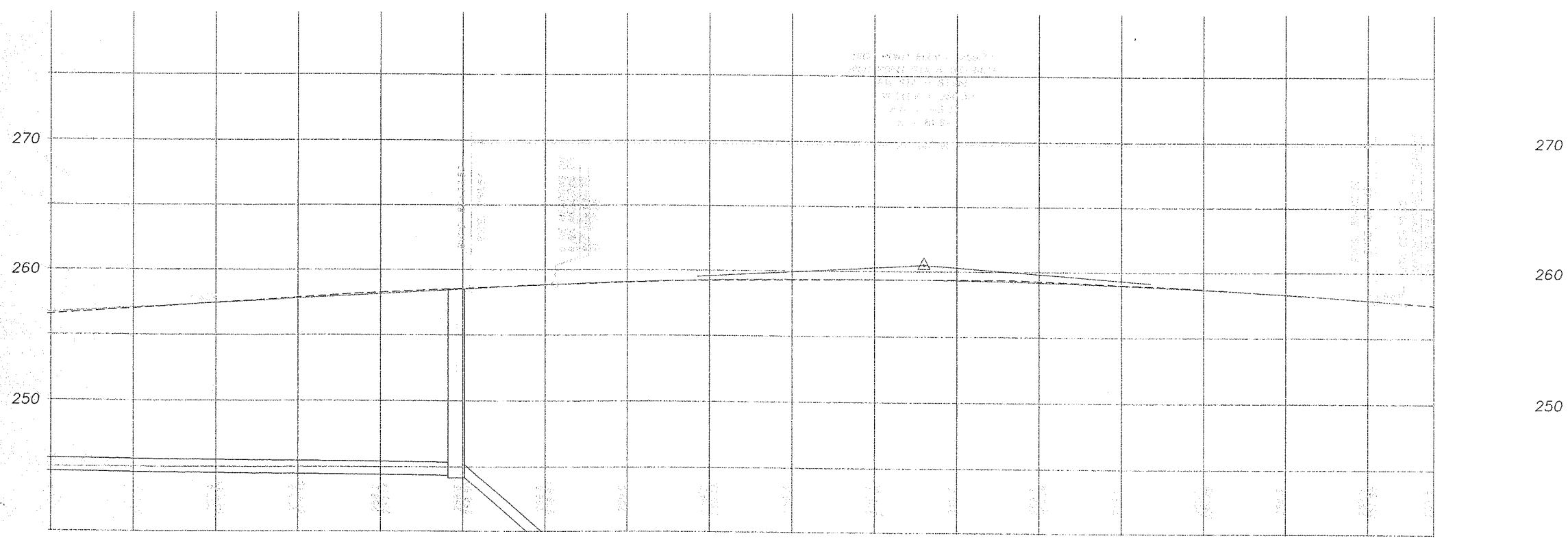

PROFILE NE 63rd ST.

0 20 40

HORIZ. SCALE: 1"= 20'

NOTES

CALL 48 HOURS BEFORE YOU DIG
696-4848
"It's the Law"
CLARK COUNTY UTILITIES COORDINATING COUNCIL

FILE NAME: 083094Design.dwg
DATE: 08-27-2004
DESIGNED BY: JJU/EJS
DRAWN BY: JJU
CHECKED BY: DLS/EJS
APPROVED BY: VRE
SCALE
HORIZONTAL: 1" = 20'
VERTICAL: 1" = 5'
REVISIONS
DATE | No.

ELAINE J. SPRAY
STATE OF WASHINGTON
21534
REGISTERED PROFESSIONAL ENGINEER
EXPIRES FEB. 7, 2005

DONALD L. SKAGGS
STATE OF WASHINGTON
17951
REGISTERED PROFESSIONAL ENGINEER
EXPIRES FEB 4, 2005

NE 63RD ST
WATER IMPROVEMENTS
CITY OF VANCOUVER DESIGN ENGINEERING
P.O Box 1995
Vancouver WA 98668
WATER:(360)696-8223

NE 63RD ST
SEWER IMPROVEMENTS
CITY OF VANCOUVER DESIGN ENGINEERING
P.O Box 1995
Vancouver WA 98668
SEWER:(360)696-8020

CITY OF VANCOUVER
WASHINGTON

JOB NUMBER
083094

DWG. U11

SHEET 78 OF 81

PROFILE NE 72nd AVE.

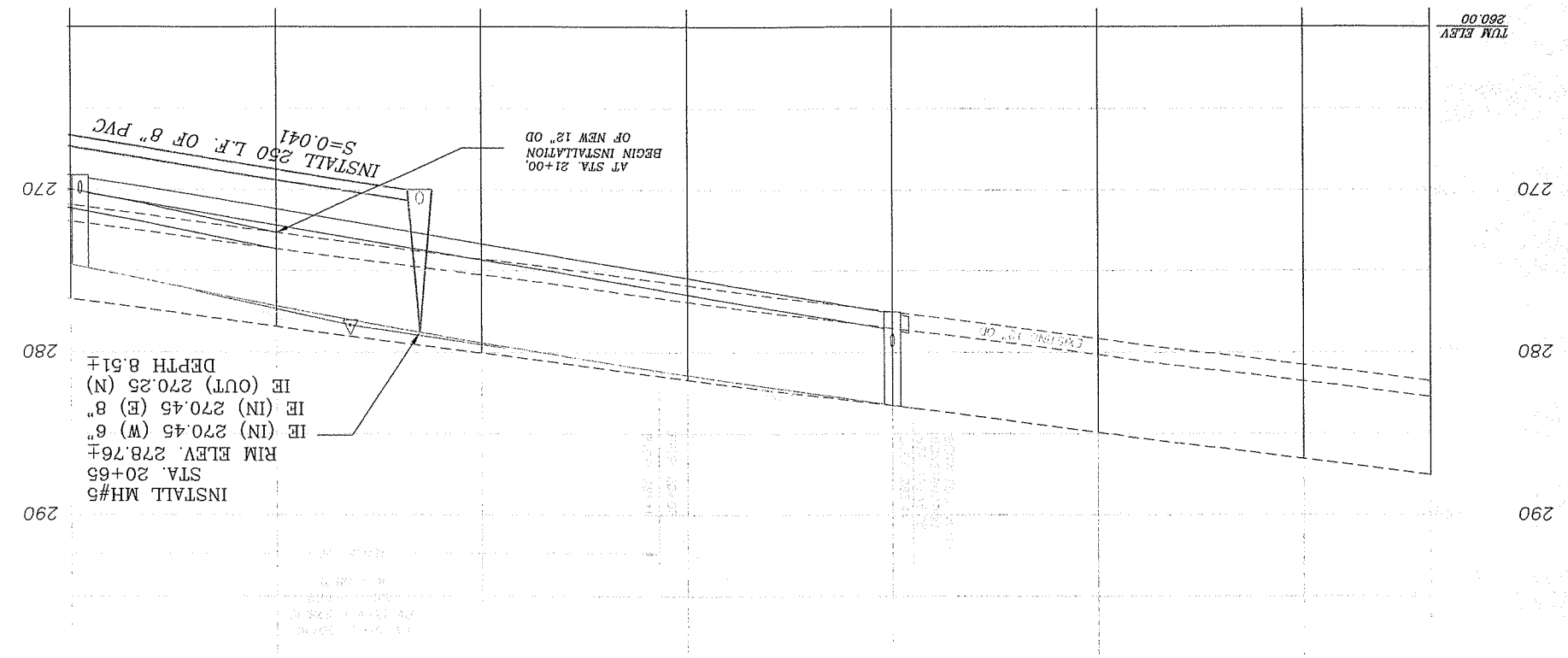

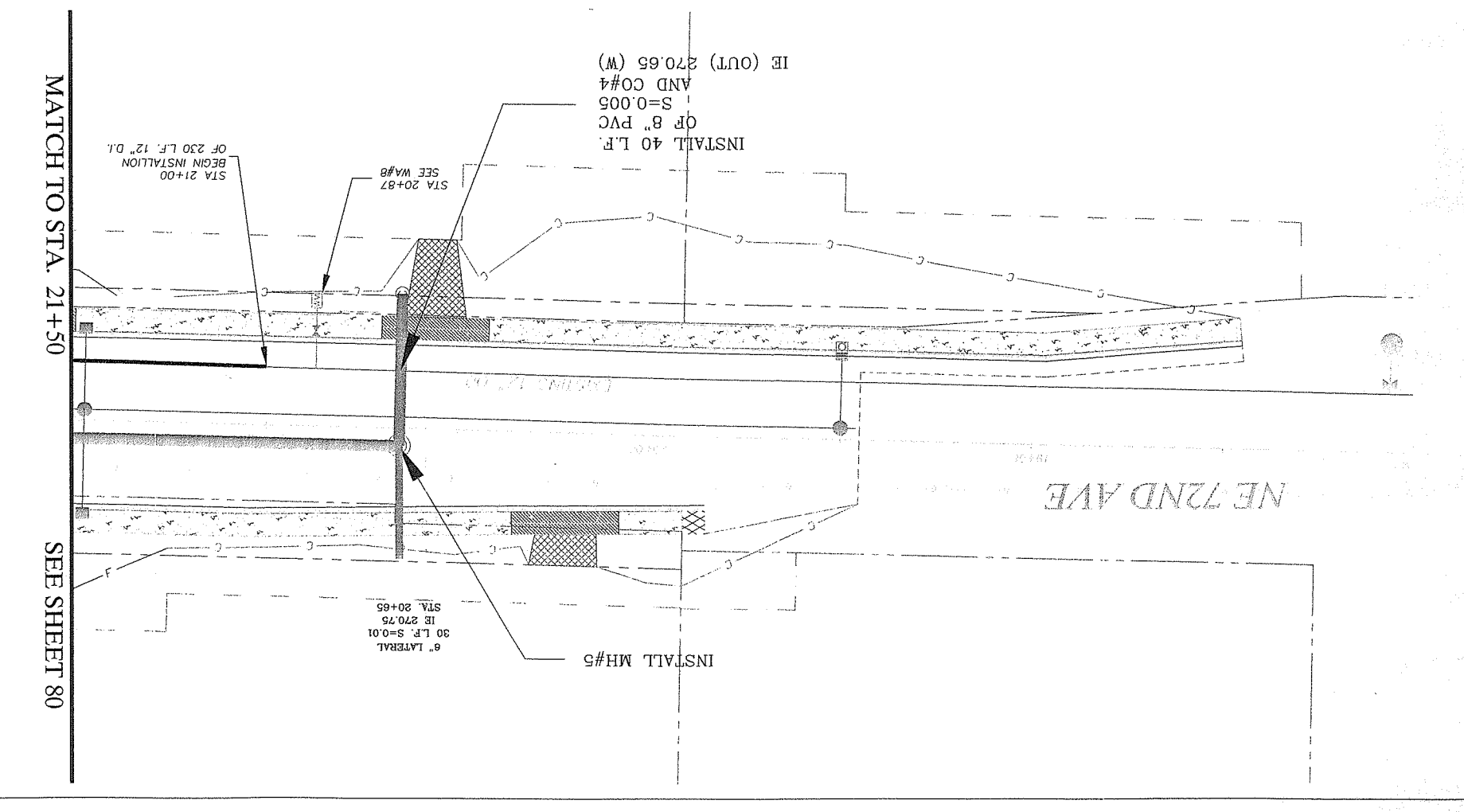

HORIZ. SCALE: 1"= 20'

0 20 40

NOTES

WA.#8.
RELOCATE EXISTING METER BOX
TO EAST SIDE OF SIDEWALK

DATE:	08-27-2004
DESIGNED BY:	JJU/E.JS
DRAWN BY:	JJU
CHECKED BY:	DLS/E.JS
APPROVED BY:	VRE
FILE NAME:	083094Design.dwg

SCALE
HORIZONTAL: 1" = 20'
VERTICAL: 1" = 5'

DATE	No.	REVISIONS

CALL 48 HOURS
BEFORE YOU DIG
696-4848
"It's the Law"
CLARK COUNTY
UTILITIES
COORDINATING COUNCIL

DONALD L. SCHLAGOS
STATE OF WASHINGTON
17951
REGISTERED
PROFESSIONAL ENGINEER
EXPIRES FEB. 4, 2005

ELAINE J. SPRAY
STATE OF WASHINGTON
22364
REGISTERED
PROFESSIONAL ENGINEER
EXPIRES FEB. 7, 2005

NE 63RD ST
WATER IMPROVEMENTS
CITY OF VANCOUVER DESIGN ENGINEERING
P.O Box 1995
Vancouver WA 98668
WATER:(360)696-8223

NE 63RD ST
SEWER IMPROVEMENTS
CITY OF VANCOUVER DESIGN ENGINEERING
P.O Box 1995
Vancouver WA 98668
SEWER:(360)696-8020

CITY OF VANCOUVER
WASHINGTON

JOB NUMBER
083094

DWG. U12 SHEET 79 OF 81

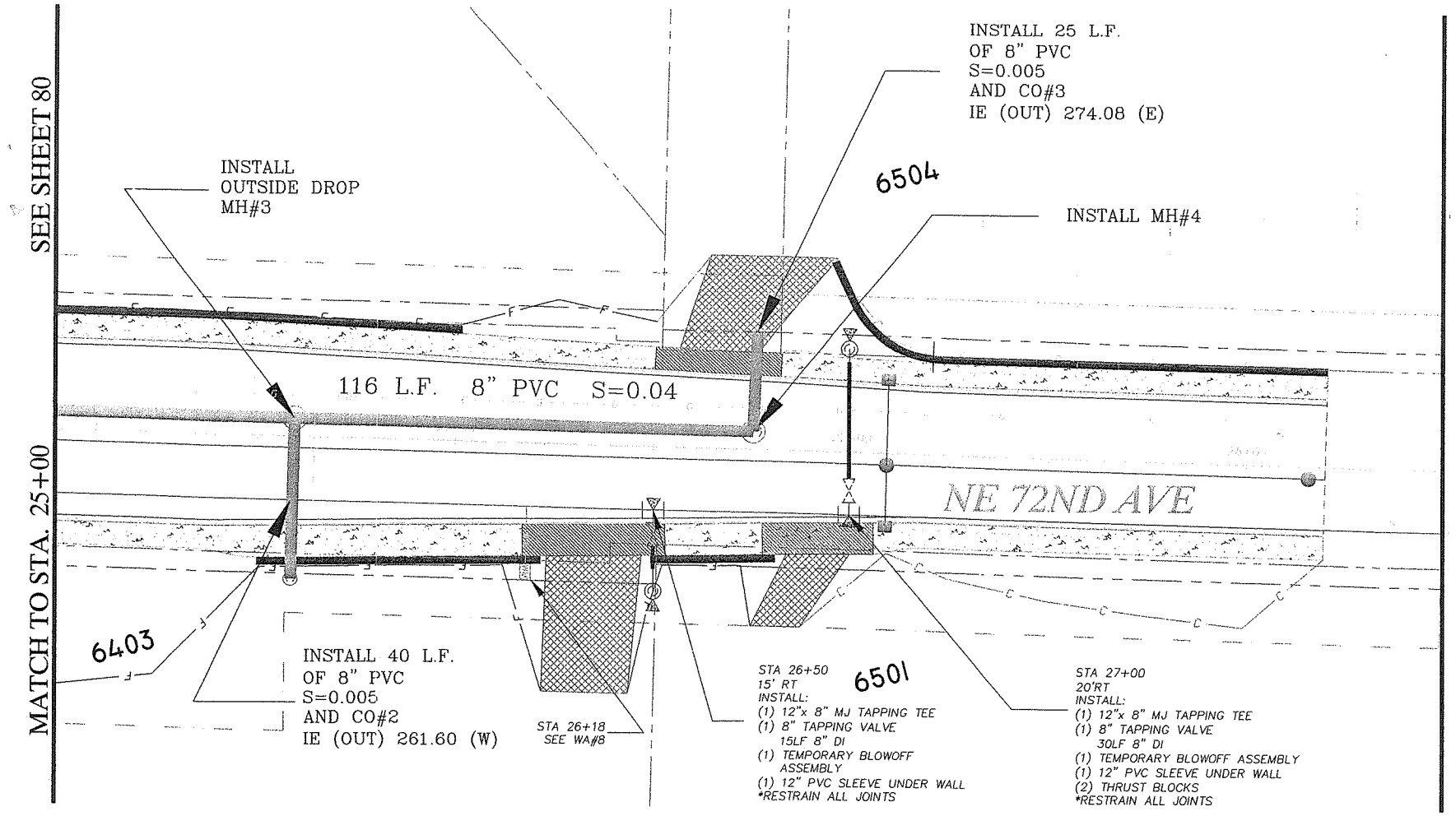

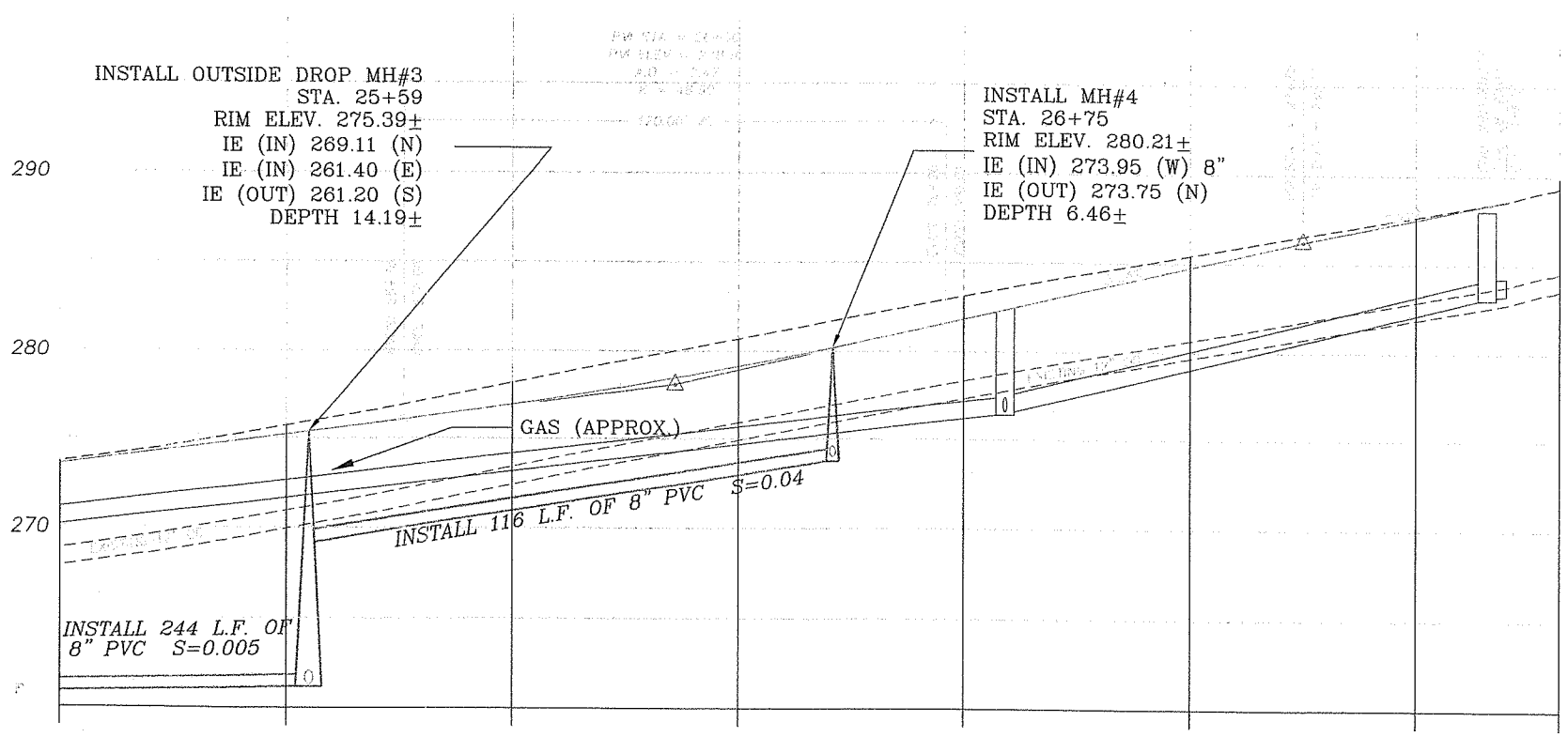

PROFILE NE 72nd AVE.

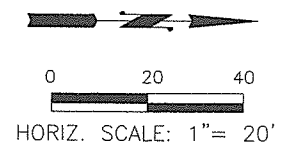

NOTES

WA.#8:
RELOCATE EXISTING METER BOX TO EAST SIDE OF SIDEWALK

CALL 48 HOURS BEFORE YOU DIG
696-4848
"It's the Law"
CLARK COUNTY UTILITIES COORDINATING COUNCIL

FILE NAME: 083094design.dwg
SCALE
HORIZONTAL: 1" = 20'
VERTICAL: 1" = 5'
DATE: 08-27-2004
DESIGNED BY: JJU/EJS
DRAWN BY: JJU
CHECKED BY: DLS/EJS
APPROVED BY: VRE
REVISIONS
DATE | No.

ELAINE J. SPRAY, STATE OF WASHINGTON, 29234, REGISTERED PROFESSIONAL ENGINEER — EXPIRES FEB. 7, 2005

DONALD L. SKAGGS, STATE OF WASHINGTON, 19793, REGISTERED PROFESSIONAL ENGINEER — EXPIRES FEB 4, 2005

NE 63RD ST
WATER IMPROVEMENTS
CITY OF VANCOUVER DESIGN ENGINEERING
P.O Box 1995
Vancouver WA 98668
WATER:(360)696-8223

NE 63RD ST
SEWER IMPROVEMENTS
CITY OF VANCOUVER DESIGN ENGINEERING
P.O Box 1995
Vancouver WA 98668
SEWER:(360)696-8020

CITY OF VANCOUVER WASHINGTON

JOB NUMBER
083094

DWG. U14 | SHEET 81 OF 81