CAPITAL IMPROVEMENTS PROGRAM
COUNTY ROAD PROJECT #340622

NE 119TH STREET

VICINITY OF SALMON CREEK AVE TO NE 72ND AVE

PLANS FOR THE CONSTRUCTION OF
ROADWAYS, SIGNALIZATION AND STORM DRAINAGE

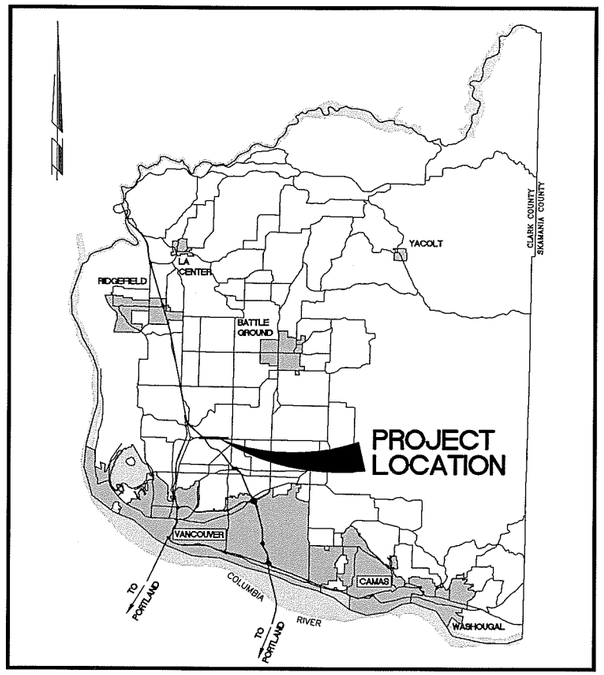

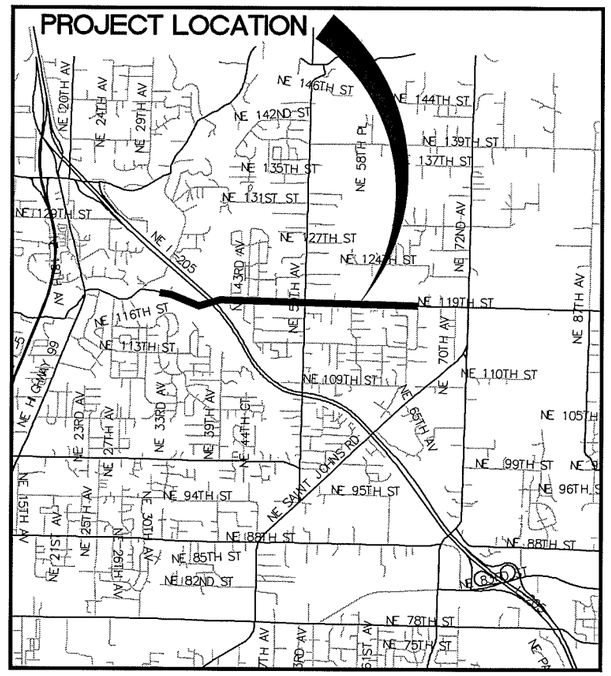

INDEX OF SHEETS

Sheet List Table

Sheet Number	Sheet Title	Sheet Description
1	CV1	COVER SHEET
2	SQ1	SUMMARY OF QUANTITIES AND LEGEND
3	TS1	TYPICAL SECTIONS
4	HV1	HORIZONTAL AND VERTICAL CONTROL
X	EC01	EROSION CONTROL PLAN
X	EC02	EROSION CONTROL PLAN
X	EC03	EROSION CONTROL PLAN
X	EC04	EROSION CONTROL DETAILS
X	RD1	ROADWAY DETAILS
X	RD2	ROADWAY DETAILS
X	DD1	DRAINAGE DETAILS
X	DD2	DRAINAGE DETAILS
X	DD3	DRAINAGE DETAILS
X	DD4	DRAINAGE DETAILS
X	PP1	PLAN & PROFILE (STA 50+00 TO STA 55+00)
X	PP2	PLAN & PROFILE (STA 55+00 TO STA 60+00)
X	PP3	PLAN & PROFILE (STA 60+00 TO STA 65+00)
X	PP4	PLAN & PROFILE (STA 65+00 TO STA 70+00)
X	PP5	PLAN & PROFILE (STA 70+00 TO STA 75+00)
X	PP6	PLAN & PROFILE (STA 75+00 TO STA 80+00)
X	PP7	PLAN & PROFILE (STA 80+00 TO STA 85+00)
X	PP8	PLAN & PROFILE (STA 85+00 TO STA 90+00)
X	PP9	PLAN & PROFILE (STA 90+00 TO STA 95+00)
X	PP10	PLAN & PROFILE (STA 95+00 TO STA 100+00)
X	PP11	PLAN & PROFILE (STA 100+00 TO STA 105+00)
X	PP12	PLAN & PROFILE (STA 105+00 TO STA 110+00)
X	PP13	PLAN & PROFILE (STA 110+00 TO STA 115+00)
X	PP14	PLAN & PROFILE (STA 115+00 TO STA 120+00)
X	PP15	PLAN & PROFILE (STA 120+00 TO STA 125+00)
X	PP16	PLAN & PROFILE (STA 125+00 TO STA 130+00)
X	PP17	PLAN & PROFILE (STA 130+00 TO STA 135+00)
X	PP18	PLAN & PROFILE (NE 50TH AVENUE)
X	PP19	PLAN & PROFILE (NE 50TH AVENUE)
X	DP1	DRAINAGE PLAN (STA 50+00 TO STA 55+00)
X	DP2	DRAINAGE PLAN (STA 55+00 TO STA 60+00)
X	DP3	DRAINAGE PLAN (STA 60+00 TO STA 65+00)
X	DP4	DRAINAGE PLAN (STA 65+00 TO STA 70+00)
X	DP5	DRAINAGE PLAN (STA 70+00 TO STA 75+00)
X	DP6	DRAINAGE PLAN (STA 75+00 TO STA 80+00)
X	DP7	DRAINAGE PLAN (STA 80+00 TO STA 85+00)
X	DP8	DRAINAGE PLAN (STA 85+00 TO STA 90+00)
X	DP9	DRAINAGE PLAN (STA 90+00 TO STA 95+00)
X	DP10	DRAINAGE PLAN (STA 95+00 TO STA 100+00)
X	DP11	DRAINAGE PLAN (STA 100+00 TO STA 105+00)
X	DP12	DRAINAGE PLAN (STA 105+00 TO STA 110+00)
X	DP13	DRAINAGE PLAN (STA 110+00 TO STA 115+00)
X	DP14	DRAINAGE PLAN (STA 115+00 TO STA 120+00)
X	DP15	DRAINAGE PLAN (STA 120+00 TO STA 125+00)
X	DP16	DRAINAGE PLAN (STA 125+00 TO STA 130+00)
X	DP17	DRAINAGE PLAN (STA 130+00 TO STA 135+00)
X	DP18	DRAINAGE PLAN (STA 135+00 TO STA 140+00)
X	DP19	DRAINAGE PLAN (STA 140+00 TO STA 145+00)
X	DP20	DRAINAGE PLAN (STA 145+00 TO STA 150+00)
X	DP21	DRAINAGE PLAN (STA 150+00 TO STA 155+00)
X	DP22	DRAINAGE PLAN (STA 155+00 TO STA 160+00)
X	I01	INTERSECTION PLAN
X	I02	INTERSECTION PLAN
X	SS01	NE 119TH ST @ NE 50TH AVE SIGNAL

PRELIMINARY

30% REVIEW SET

ENG #

COMMISSIONERS:

BETTY SUE MORRIS, Chair
MARC BOLDT, Commissioner
STEVEN J. STUART, Commissioner

proud past, promising future
CLARK COUNTY
WASHINGTON

DEPARTMENT OF
PUBLIC WORKS

ENGINEERING PROGRAM - DESIGN SECTION

BRUCE A. KILLIN
STATE OF WASHINGTON
39868
REGISTERED
PROFESSIONAL ENGINEER
EXPIRES:APRIL 7, 2006

JOHN MILNE
STATE OF WASHINGTON
31148
REGISTERED
PROFESSIONAL ENGINEER
EXPIRES:JULY 7, 2007

Quality Assurance	Project Manager	Public Works Director/ County Engineer
DATE:	DATE:	DATE:
Larry Maddux, PLS	Matt Hall	Peter Capell, P.E.

proud past, promising future
CLARK COUNTY
WASHINGTON

Recommended for Approval

Grading _____ Erosion _____

Storm Water Plan _____

Development Review Manager _____ Date

N:\CIP\PROJECTS\340622-NE119thStWest-SalmonCrAve-NE72ndAve\DESIGN\DWGS\COV.dwg, Layout1, 10/27/2005 10:37:40 AM, begleyk

PRELIMINARY

SUMMARY OF QUANTITIES

ItemNum	BID ITEM	UNIT	QUANTITY
109.07	MOBILIZATION	L.S.	1
109.10	MINOR CHANGE	CALC.	1
109.13	REPLACEMENT STAKING SERVICES	HOUR	10
	TRAFFIC CONTROL		
110.00	TRAFFIC CONTROL LABOR	HOUR	5000
110.10	TRAFFIC CONTROL SUPERVISOR	HOUR	1750
110.30	TEMPORARY TRAFFIC CONTROL DEVICES	L.S.	1
110.40	CONSTRUCTION SIGNS CLASS "A"	S.F.	600
	PREPARATION		
201.01	CLEARING AND GRUBBING	ACRE	2
201.20	ROADSIDE CLEANUP	EST.	1
202.00	REMOVAL OF STRUCTURES AND OBSTRUCTION	L.S.	1
	GRADING		
203.10	ROADWAY EXCAVATION (INCL. HAUL)	C.Y.	30000
203.15	STORMWATER FACILITY EXCAVATION (INCL. HAUL)	C.Y.	28634
203.20	EMBANKMENT COMPACTION	C.Y.	17000
203.51	SAWCUT EXISTING CONCRETE	L.F.	250
207.00	WATER	MGAL	1000
	SURFACING		
404.50	CRUSHED SURFACING BASE COURSE	TON	33000
404.52	CRUSHED SURFACING TOP COURSE	TON	1200
	ASPHALT CONCRETE PAVEMENT		
504.02	HMA CL A PG 64-22	TON	6200
504.03	HMA CL E PG 64-22	TON	9500
504.11	SAWCUT EXISTING ASPHALT PAVEMENT	L.F.	500
504.21	HMA FOR APPROACH CL. A PG 64-22	S.Y.	2000
	STRUCTURES		
612.30	NOISE BARRIER/RETAINING WALL DESIGN	L.S.	1
612.32	NOISE BARRIER/RETAINING WALL	S.F.	5500
613.41	GEOGRID SOIL REINFORCEMENT FABRIC	S.Y.	2800
613.51	MODULAR/SEGMENTAL BLOCK RET. WALL (Incl. Cap Unit)	S.F.	10500
	DRAINAGE STRUCTURES, STORM SEWER, UTILITIES		
704.10	STORM SEWER PIPE, 10 IN. DIAM.	L.F.	1223
704.12	STORM SEWER PIPE, 12 IN. DIAM.	L.F.	464
704.18	STORM SEWER PIPE, 18 IN. DIAM.	L.F.	2905
704.24	STORM SEWER PIPE, 24 IN. DIAM.	L.F.	88
704.36	STORM SEWER PIPE, 36 IN. DIAM.	L.F.	4519
704.??	STORM SEWER PIPE, 36 IN. DIAM. (CL V; DEEP)	L.F.	903
705.01	MANHOLE 48 IN. DIAM. TYPE 1	EACH	15
705.14	MANHOLE 60 IN. DIAM. TYPE 1	EACH	5
705.3?	MANHOLE 72 IN. DIAM. TYPE 2	EACH	25
705.35	CATCH BASIN TYPE 1	EACH	21
705.63	CONCRETE COMBINATION CURB INLET	EACH	46
705.64	CONCRETE DITCH INLET	EACH	2
	EROSION CONTROL AND PLANTING		
	EROSION CONTROL AND LANDSCAPING	L.S.	1
	OTHER		
	WETLAND PLANTING (SWFs)	ACRE	4
	WETLAND ENHANCEMENT (OFFSITE; PROPERTY COST PLUS PLAN	ACRE	14
804.01	CEMENT CONC. BARRIER CURB AND GUTTER	L.F.	17000
806.00	CEMENT CONCRETE APPROACH, 3-DAY	S.Y.	2000
814.01	CEMENT CONCRETE SIDEWALK	S.Y.	11000
812.13	CHAIN LINK FENCE TYPE 6	L.F.	1000
812.30	WIRE FENCE TYPE 1	L.F.	300
812.53	FENCE REMOVAL	L.F.	4300
812.85	CONSTRUCT 6 FOOT CEDAR FENCE	L.F.	3000
814.05	DETECTABLE WARNING PATTERN	EACH	34
818.00	MAILBOX SUPPORT TYPE 1	EACH	40
820.30	TRAFFIC SIGNAL SYSTEM (NE 119TH ST / NE 50TH AVE)	L.S.	1
	UTILITY RELOCATION	L.S.	1

GENERAL NOTES

1. SURVEY DATUM PER CLARK COUNTY.

2. EXISTING UTILITIES SHOWN ON THE PLANS ARE PER SURFACE LOCATIONS, RECORD DRAWINGS, AND LIMITED POTHOLE DATA. THE CONTRACTOR SHALL FIELD VERIFY LOCATIONS OF ALL EXISTING UTILITIES PRIOR TO CONSTRUCTION. IF CONFLICT EXISTS, NOTIFY THE ENGINEER AND UTILITY COMPANY. PROCEED ONLY AS DIRECTED AND PER STANDARD POLICY AND REGULATIONS (INCIDENTAL TO STORM SEWER PIPE).

3. ALL NECESSARY CONSTRUCTION SURVEY SHALL BE PROVIDED AT NO COST TO THE CONTRACTOR. HOWEVER, THE CONTRACTOR WILL BE RESPONSIBLE FOR REPLACING NEEDED SURVEY STAKES DESTROYED THROUGH NORMAL OPERATIONS, NEGLIGENCE, OR INATTENTION.

4. AT THE END OF EACH DAY, THE CONTRACTOR SHALL CLEAN UP THE PROJECT AREA AND LEAVE IT IN A NEAT AND SECURED MANNER. UPON COMPLETION, THE CONTRACTOR SHALL LEAVE THE PROJECT AREA FREE OF DEBRIS AND UNUSED MATERIAL.

5. IF EXISTING CONCRETE CURBS AND SIDEWALKS DESIGNATED TO REMAIN ARE DAMAGED, THEY WILL BE REMOVED AND REPLACED TO ORIGINAL CONDITION AT THE CONTRACTOR'S EXPENSE.

6. CONTRACTOR TO NOTIFY THE C-TRAN OPERATION CHIEF 72 HOURS PRIOR TO CONSTRUCTION NEAR ANY C-TRAN FACILITY.

7. CONTACTOR TO COORDINATE UTILITY RELOCATIONS WITH CLARK PUBLIC UTILITIES FOR POWER AND WATER, QWEST FOR TELEPHONE, NW NATURAL FOR GAS, COMCAST FOR CABLE TV, THE CITY OF VANCOUVER AND HAZEL DELL SEWER DISTRICT FOR SANITARY SEWER.

8. CONTRACTOR SHALL PROTECT EXISTING WATER SERVICE LINES. ALL DISTURBED WATER SERVICE LINES SHALL BE REPAIRED AS DIRECTED. ALL RELOCATED METERS WILL BE RESET IN ACCORD WITH CITY OF VANCOUVER STANDARDS AND SPECIFICATIONS. THE CONTRACTOR SHALL BE RESPONSIBLE FOR THE REPAIR OF EXISTING WATER SERVICE LINES DESTROYED THROUGH NEGLIGENCE AND/OR INATTENTION.

9. CONTRACTOR TO MAINTAIN INGRESS AND EGRESS FROM ALL PRIVATE PROPERTY DRIVEWAYS DURING CONSTRUCTION.

LEGEND

ROW LINE
NEW EDGE OF PAVEMENT
NEW CURB LINE
NEW CENTER LINE
NEW FENCE LINE
NEW STORM DRAIN OR CULVERT
NEW FILL LIMITS
NEW CUT LIMITS
SAWCUT LINE
PERMANENT SLOPE EASEMENT
NEW SILT FENCE
EXISTING EDGE OF PAVEMENT
EXISTING CURB LINE
EXISTING CENTER LINE
EXISTING FENCE LINE
EXISTING TELEPHONE LINE
EXISTING WATER LINE
EXISTING UNDERGROUND ELECTRIC
EXISTING SANITARY SEWER LINE
EXISTING STORM DRAINAGE
EXISTING GAS LINE
EXISTING CULVERT
EXISTING DITCH CENTER LINE
EXISTING GUARDRAIL

SYMBOLS

NEW CATCH BASIN (CB)
NEW MANHOLE (MH)
NEW CURB INLET (CI)
NEW COMBINATION CURB INLET (CCI)
NEW MAIL BOX
NEW HANDICAP RAMP
CURVE TABLE
EXISTING TRANSFORMER
EXISTING ELEC TOWER
EXISTING SANITARY SEWER MH
EXISTING FIRE HYDRANT
EXISTING CLEAN OUT
EXISTING GAS VALVE
EXISTING WATER METER
EXISTING WATER VALVE
EXISTING SIGNAL POLE
EXISTING TELEPHONE VAULT
EXISTING TELEVISION BOX
EXISTING WELL
EXISTING BRUSH LINE
EXISTING HEDGE
EXISTING CURB INLET (CI)
EXISTING CATCH BASIN (CB)
EXISTING STORM MH
EXISTING MISC MH
EXISTING SHRUB
EXISTING CONIFEROUS TREE
EXISTING DECIDUOUS TREE
EXISTING SIGN
EXISTING DECIDUOUS TREE
EXISTING J BOX
EXISTING TELEPHONE MANHOLE
EXISTING TELEPHONE POLE
EXISTING LIGHT
EXISTING GUY ANCHOR
EXISTING POWER POLE
EXISTING MAIL BOX
EXISTING TELEPHONE PEDESTAL
EXISTING SPRINKLER HEAD
TRAVERSE POINT
TEST HOLE

DESIGNED	BK/JM
DRAWN	KB/RK
CRP	340622
HOR.	SEE SHEET
VERT.	SEE SHEET
DATE	10/31/05
DWG:	SQ1
SHEET	2 OF X

CALL 48 HOURS BEFORE YOU DIG 1-800-553-4344 "It's the Law" NORTHWEST UTILITIES NOTIFICATION CENTER

STATE OF WASHINGTON BRIAN K. KILLIAN 39888 REGISTERED PROFESSIONAL ENGINEER EXPIRES: APRIL 7, 2006

ENGINEERING PROGRAM
DESIGN SECTION

NE 119TH STREET WEST
SUMMARY OF QUANTITIES AND LEGEND

proud past, promising future
CLARK COUNTY WASHINGTON

N:\CIP\PROJECTS\340622-NE119thSt\West-SalmonCr\ve-NE72nd\ve\DESIGN\DWG\SSQ01.dwg, 10/27/2005 10:09:34 AM, klugb

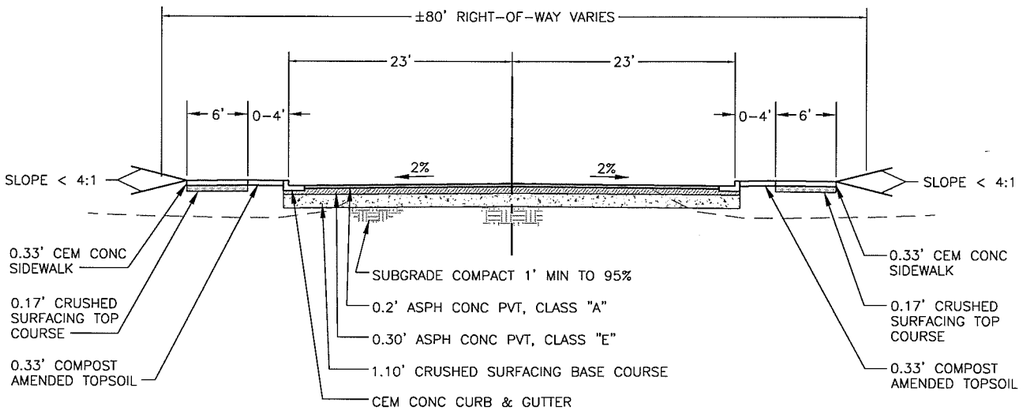

NE 119TH STREET
STA 67+65 TO 133+86

NE 50TH AVENUE

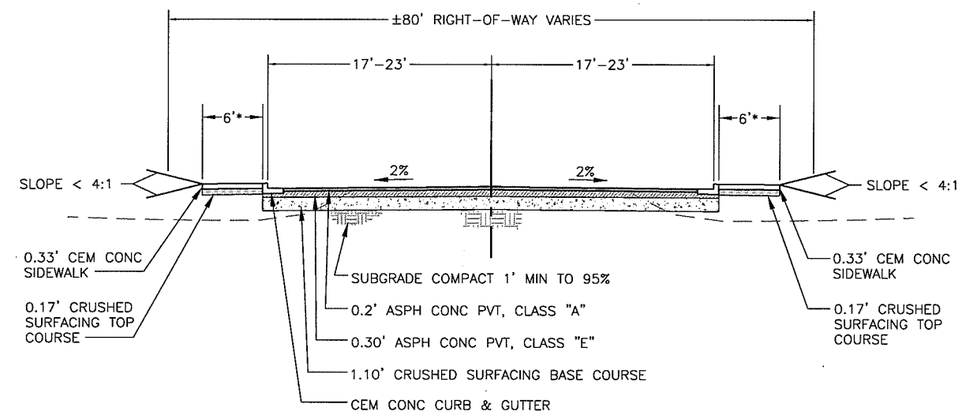

NE 94TH AVENUE
STA 52+50 TO 67+65

*5' SIDEWALK ON BRIDGE
STA 61+25 TO 65+00

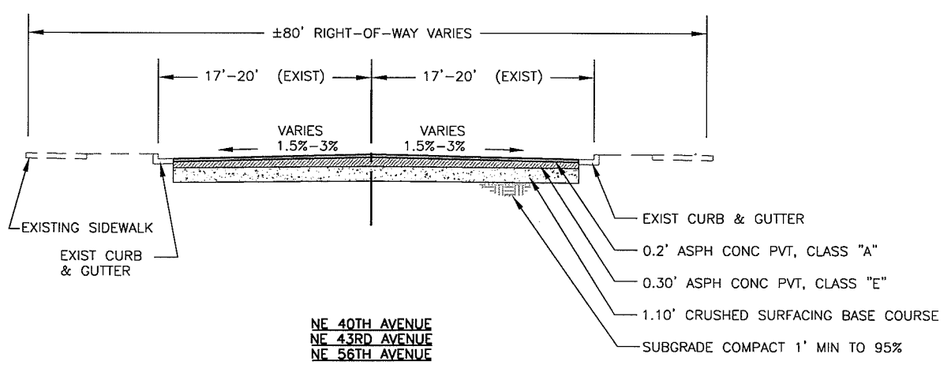

NE 40TH AVENUE
NE 43RD AVENUE
NE 56TH AVENUE

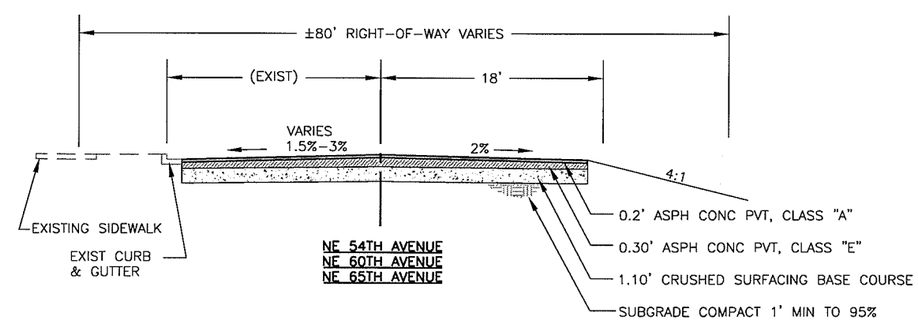

NE 54TH AVENUE
NE 60TH AVENUE
NE 65TH AVENUE

PRELIMINARY

DESIGNED	BK/JM
DRAWN	KB/RK
CRP	340622
HOR.	SEE SHEET
VERT.	SEE SHEET
DATE	10/31/05
DWG:	TS1
SHEET	3 OF X

CALL 48 HOURS BEFORE YOU DIG
1-800-553-4344
"It's the Law"
NORTHWEST UTILITIES NOTIFICATION CENTER

STEVE A. KLOS
STATE OF WASHINGTON
23882
PROFESSIONAL ENGINEER
EXPIRES APRIL 3, 2006

ENGINEERING PROGRAM
DESIGN SECTION

NE 119TH STREET WEST
TYPICAL SECTIONS

proud past, promising future
CLARK COUNTY
WASHINGTON

N:\CIP\PROJECTS\340622-NE119thStWest-SalmonCrAve-NE72ndAve\DESIGN\DWGS\TS1.dwg, Layout1, 10/27/2005 9:57:12 AM, begleyk

PRELIMINARY

SCALE IN FEET
100 0 100 200

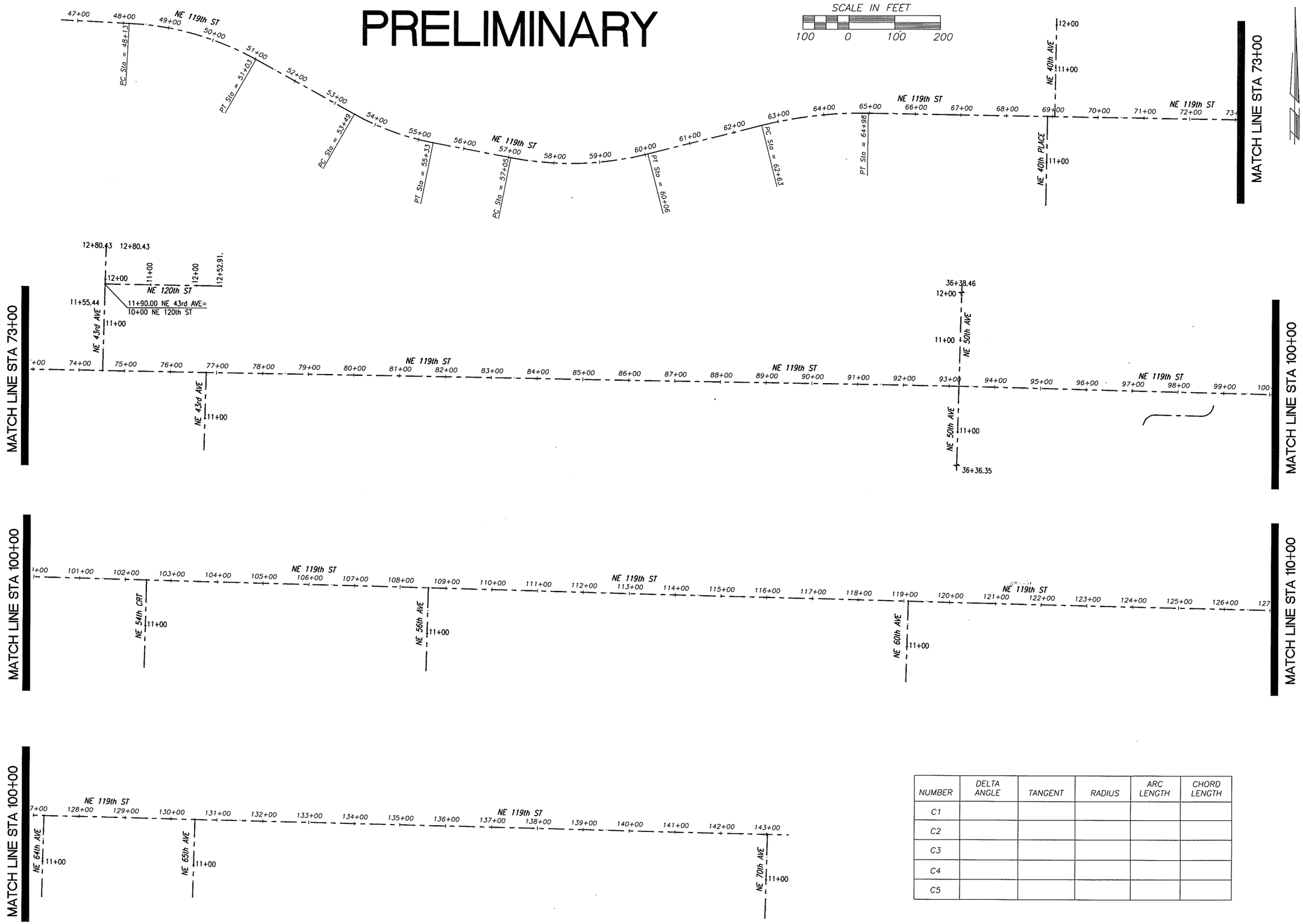

NUMBER	DELTA ANGLE	TANGENT	RADIUS	ARC LENGTH	CHORD LENGTH
C1					
C2					
C3					
C4					
C5					

DESIGNED BK/JM
DRAWN KB/RK
CRP 340622
HOR. SEE SHEET
VERT. SEE SHEET
DATE 10/31/05
DWG: HV1
SHEET 4 OF X

CALL 48 HOURS BEFORE YOU DIG
1-800-553-4344
"It's the Law"
NORTHWEST UTILITIES NOTIFICATION CENTER

STATE OF WASHINGTON
STEVE A. KLUC
NUMBER 21988
REGISTERED PROFESSIONAL ENGINEER
EXPIRES APRIL 7, 2006

ENGINEERING PROGRAM
DESIGN SECTION

NE 119TH STREET WEST
HORIZONTAL AND VERTICAL CONTROL

proud past, promising future
CLARK COUNTY
WASHINGTON

N:\CIP\PROJECTS\340622-NE119thStWest-SalmonCrAve-NE72ndAve\DESIGN\DWGS\HV1-2.dwg, Layout1, 10/25/2005 5:07:13 PM, begleyk

NOTE:
SIGNIFICANT VARIATION AND DEGREE OF EROSION CONTROL EFFORT WILL BE DICTATED BY WEATHER CONDITIONS. THE DEVELOPER AND CONTRACTOR SHOULD BE PREPARED TO PROVIDE EXTRA EROSION CONTROL PROVISIONS AND EFFORT DURING WINTER AND WET WEATHER CONDITIONS BEYOND THAT NORMALLY REQUIRED DURING SUMMER AND DRY WEATHER CONDITIONS. FINE GRAINED AND UNCONSOLIDATED SOILS ON SLOPING SITES MAY BECOME UNSTABLE WHEN SUBJECT TO EXCESSIVE MOISTURE.

PRELIMINARY

LEGEND
— SF — SILT FENCE
(IP) INLET PROTECTION
PAVEMENT REMOVAL

SCALE IN FEET
50 0 50 100

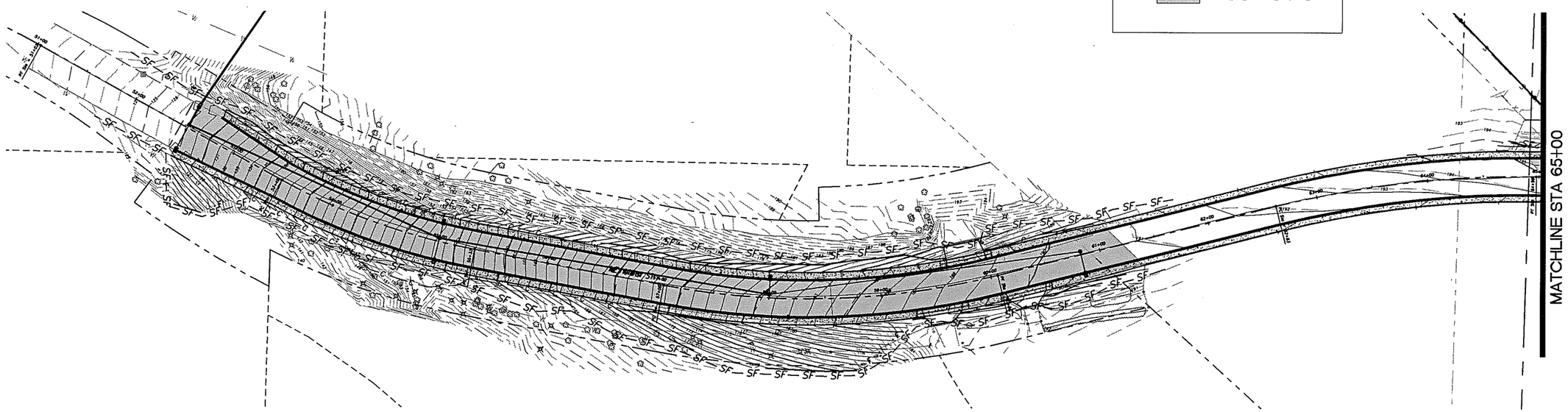

REMOVE EXT RDWY STRUCTURE TO LIMITS SHOWN. REPLACE PER TYPICAL SECTIONS, AND PLAN LAYOUT.

MILL EXISTING PAV'T 0.25' OVERLAY TO MATCH

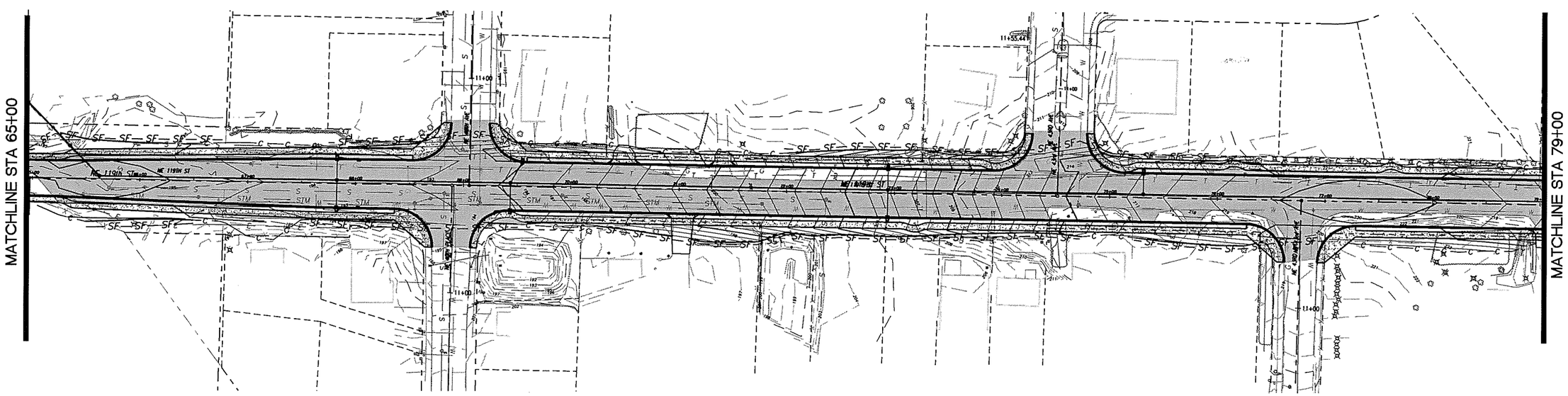

DESIGNED	BK/JM
DRAWN	KB/RK
CRP	340622
HOR.	SEE SHEET
VERT.	SEE SHEET
DATE	10/31/05
DWG:	EC01
SHEET	X OF X

CALL 48 HOURS BEFORE YOU DIG
1-800-553-4344
"It's the Law"
NORTHWEST UTILITIES NOTIFICATION CENTER

STATE OF WASHINGTON
38868
BRIAN A. ELLIS
REGISTERED PROFESSIONAL ENGINEER
EXPIRES APRIL 7, 2006

ENGINEERING PROGRAM
DESIGN SECTION

NE 119TH STREET WEST
EROSION CONTROL PLAN

proud past, promising future
CLARK COUNTY
WASHINGTON

N:\CIP\PROJECTS\340622-NE119thStWest-SalmonCrAve-NE72ndAve\DESIGN\DWGS\Ec01-6.dwg, EC01, 10/26/2005 5:06:25 PM, beglerjk

NOTE:
SIGNIFICANT VARIATION AND DEGREE OF EROSION CONTROL EFFORT WILL BE DICTATED BY WEATHER CONDITIONS. THE DEVELOPER AND CONTRACTOR SHOULD BE PREPARED TO PROVIDE EXTRA EROSION CONTROL PROVISIONS AND EFFORT DURING WINTER AND WET WEATHER CONDITIONS BEYOND THAT NORMALLY REQUIRED DURING SUMMER AND DRY WEATHER CONDITIONS. FINE GRAINED AND UNCONSOLIDATED SOILS ON SLOPING SITES MAY BECOME UNSTABLE WHEN SUBJECT TO EXCESSIVE MOISTURE.

LEGEND
— SF — SILT FENCE
(IP) INLET PROTECTION
PAVEMENT REMOVAL

SCALE IN FEET
50 0 50 100

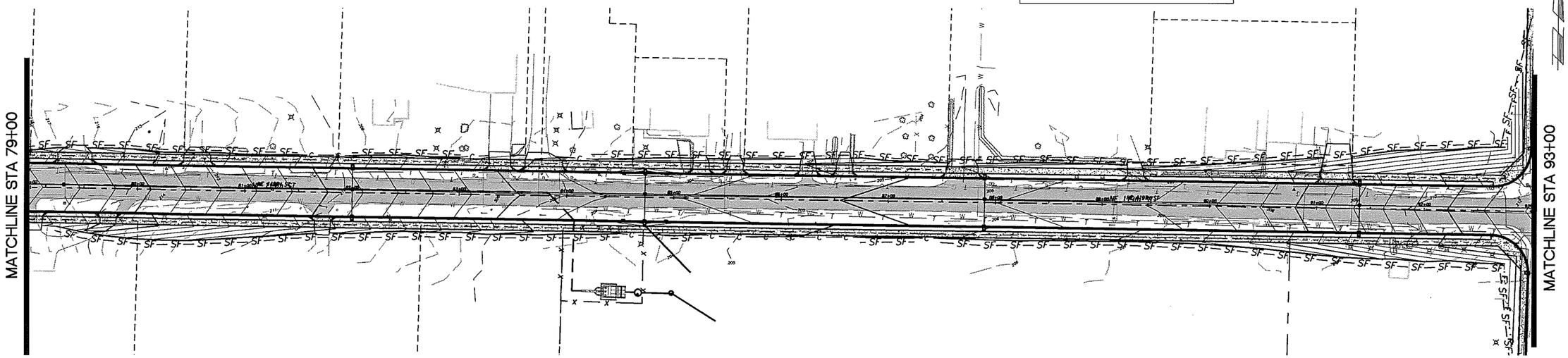

REMOVE EXT RDWY STRUCTURE TO LIMITS SHOWN. REPLACE PER TYPICAL SECTIONS, AND PLAN LAYOUT.

MILL EXISTING PAV'T 0.25' OVERLAY TO MATCH

PRELIMINARY

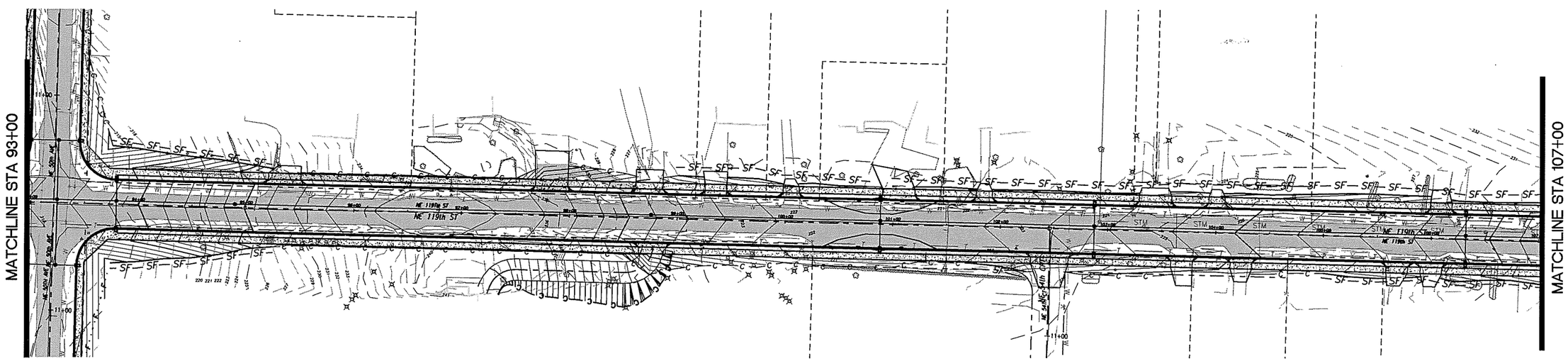

DESIGNED	BK/JM
DRAWN	KB/RK
CRP	340622
HOR.	SEE SHEET
VERT.	SEE SHEET
DATE	10/31/05
DWG:	EC02
SHEET	X OF X

CALL 48 HOURS BEFORE YOU DIG
1-800-553-4344
"It's the Law"
NORTHWEST UTILITIES NOTIFICATION CENTER

STATE OF WASHINGTON
BRUCE A. ELLIS
23856
REGISTERED PROFESSIONAL ENGINEER
EXPIRES APRIL 7, 2006

ENGINEERING PROGRAM
DESIGN SECTION

NE 119TH STREET WEST
EROSION CONTROL PLAN

proud past, promising future
CLARK COUNTY
WASHINGTON

N:\CIP\PROJECTS\340622-NE119thStWest-SalmonCrAve-NE72ndAve\DESIGN\DWGS\Ec01-6.dwg, EC02, 10/25/2005 5:06:36 PM, begleyk

NOTE:
SIGNIFICANT VARIATION AND DEGREE OF EROSION CONTROL EFFORT WILL BE DICTATED BY WEATHER CONDITIONS. THE DEVELOPER AND CONTRACTOR SHOULD BE PREPARED TO PROVIDE EXTRA EROSION CONTROL PROVISIONS AND EFFORT DURING WINTER AND WET WEATHER CONDITIONS BEYOND THAT NORMALLY REQUIRED DURING SUMMER AND DRY WEATHER CONDITIONS. FINE GRAINED AND UNCONSOLIDATED SOILS ON SLOPING SITES MAY BECOME UNSTABLE WHEN SUBJECT TO EXCESSIVE MOISTURE.

LEGEND
— SF — SILT FENCE
(IP) INLET PROTECTION
PAVEMENT REMOVAL

SCALE IN FEET
50 0 50 100

MATCHLINE STA 107+00

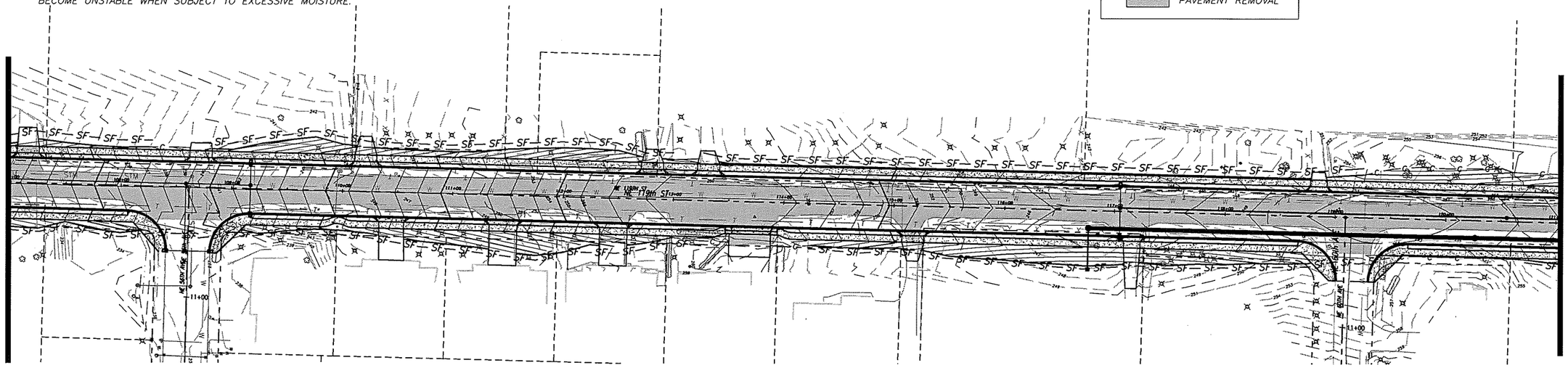

MATCHLINE STA 121+00

PRELIMINARY

REMOVE EXT RDWY STRUCTURE TO LIMITS SHOWN. REPLACE PER TYPICAL SECTIONS, AND PLAN LAYOUT.

MILL EXISTING PAV'T 0.25' OVERLAY TO MATCH

MATCHLINE STA 121+00

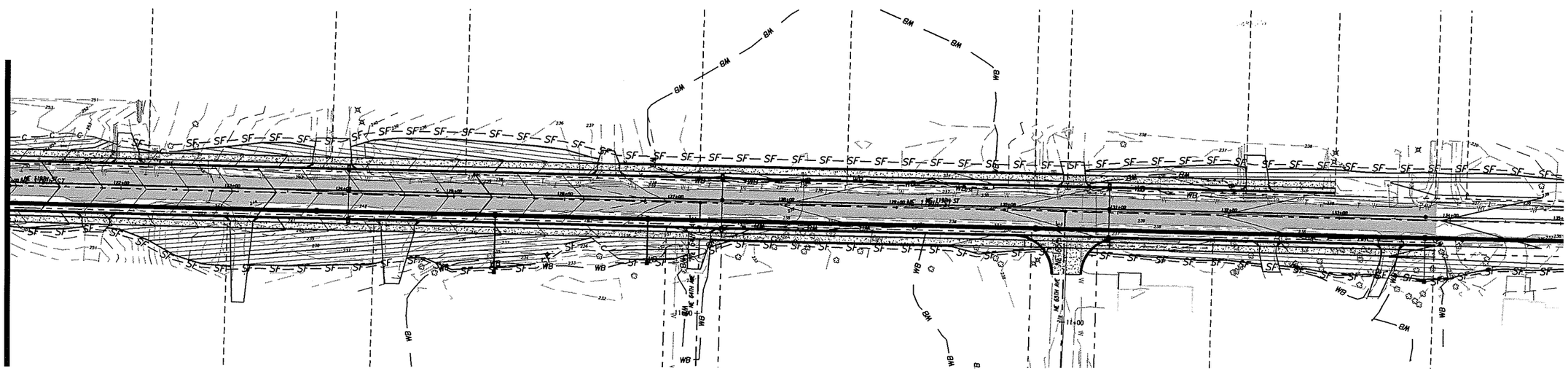

DESIGNED BK/JM
DRAWN KB/RK
CRP 340622
HOR. SEE SHEET
VERT. SEE SHEET
DATE 10/31/05
DWG: EC03
SHEET X OF X

CALL 48 HOURS BEFORE YOU DIG
1-800-553-4344
"It's the Law"
NORTHWEST UTILITIES NOTIFICATION CENTER

JOSEPH A. KING
STATE OF WASHINGTON
PROFESSIONAL ENGINEER
EXPIRES APRIL 7, 2006

ENGINEERING PROGRAM
DESIGN SECTION

NE 119TH STREET WEST
EROSION CONTROL PLAN

proud past, promising future
CLARK COUNTY
WASHINGTON

N:\CIP\PROJECTS\340622-NE119thStWest-SalmonCrAve-NE72ndAve\DESIGN\DWGS\Ec01-6.dwg, EC03, 10/25/2005 5:06:47 PM, bagleyk

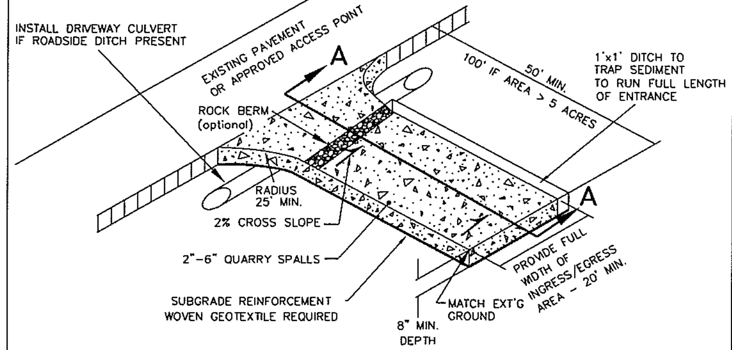

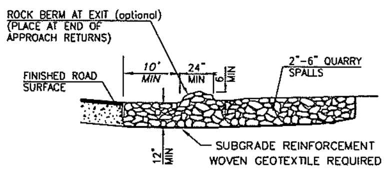

SECTION A-A

1. EXCAVATE MINIMUM OF 12" OF EXISTING SOILS.
2. PLACE MINIMUM OF 12" OF 2"-6" QUARRY SPALLS
3. CONSTRUCT ROCK BERM ALONG TRANSITION POINT TO FINISH ROAD SURFACES, DIVERT RUNOFF TO ONSITE AREA (OPTIONAL).

NOTES:

1. FOR DEVELOPMENT PROJECTS REVIEWED BY ENGINEERING SERVICES. NOT FOR USE WITH SINGLE FAMILY OR DUPLEX RESIDENTIAL BUILDING PERMITS. SEE BUILDING DEPT. FOR GRAVEL CONSTRUCTION ENTRANCE PLAN.
2. INSTALL WOVEN GEOTEXTILE FABRIC TO PREVENT SUB-SOIL PUMPING.
3. VEHICLE WASHDOWN AREA, IF REQUIRED, IS TO BE INSTALLED AND USED TO REMOVE SEDIMENT FROM VEHICLES THAT ARE ABOUT TO ENTER AN ESTABLISHED ROAD.
4. WASHDOWN AREA TO BE MADE UP OF CLEAN 2"- 6" QUARRY SPALLS, 1" DEEP (MIN) OVER WOVEN GEOTEXTILE FABRIC. WASHDOWN AREA TO BE FULL WIDTH OF ENTRANCE AND 50' (MIN.), AND 100' IF EXPOSED SOIL IS OVER 5 ACRES.
5. AT TIME OF PRECONSTRUCTION MEETING, THE COUNTY INSPECTOR MAY REQUIRE THE ENTRANCE TO BE PAVED TO THE EDGE OF THE RIGHT-OF-WAY PRIOR TO THE INSTALLATION OF A WASHDOWN ENTRANCE TO AVOID DAMAGE TO THE EXISTING ROADWAY.
6. THE RESPONSIBLE EROSION CONTROL INDIVIDUAL IS TO ENSURE THAT ALL VEHICLES USE THIS ENTRANCE AND ARE TO BE INSPECTED AND CLEANED OF SOILS BEFORE LEAVING PROJECT, AND THAT THE ENTRANCE IS TO BE KEPT CLEAN AT ALL TIMES.

NO.	REVISIONS	DATE	BY

DWG: E-1.DWG

Department of Public Works
CLARK COUNTY
WASHINGTON
proud past, promising future

STANDARD CONSTRUCTION ENTRANCE

APPROVED
COUNTY ENGINEER — 01/01/04 DATE

STANDARD E-1
PLAN No.
DESIGNED SCH
DRAWN SCH
DATE 07/07/03

BIO-FILTER BAGS OR STRAW WATTLES MAY BE USED SHORT TERM W/ UTILITY WORK AND W/ PHASING OF DEVELOPMENT

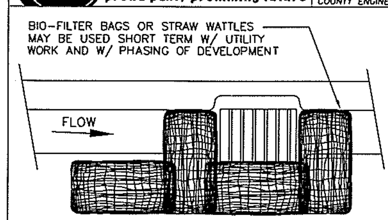

CATCH BASIN

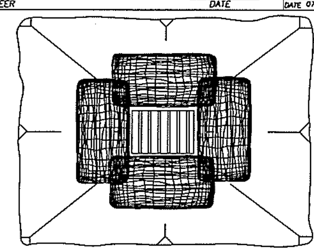

AREA DRAIN

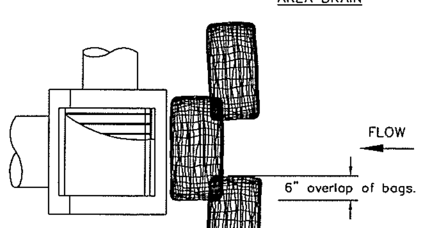

PLAN VIEW

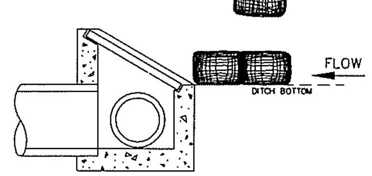

DITCH INLET

NOTES:

1. ADDITIONAL MEASURES MUST BE CONSIDERED DEPENDING ON SOIL TYPE.
2. BIO-FILTER BAGS SHOULD BE STAKED WHERE APPLICABLE USING (2) 1"x2" WOODEN STAKES OR APPROVED EQUAL PER BAG.
3. STRAW WATTLES MUST BE STABILIZED BY ATTACHING WIRE CLIPS TO THE CATCH BASIN PER MANUFACTURES SPECIFICATIONS.
4. INLET PROTECTION MUST BE REGULARLY INSPECTED BY THE EROSION CONTROL INDIVIDUAL TO INSURE PROPER PLACEMENT/FUNCTION AND MAINTENANCE.
5. SEE INLET PROTECTION NOTES STD. PLAN E-3

NO.	REVISIONS	DATE	BY

DWG: E-3c.DWG

Department of Public Works
CLARK COUNTY
WASHINGTON
proud past, promising future

INLET PROTECTION TYPE 4
BIOFILTER BAGS

APPROVED
COUNTY ENGINEER — 01/01/04 DATE

STANDARD E-3c
PLAN No.
DESIGNED SCH
DRAWN SCH
DATE 08/07/03

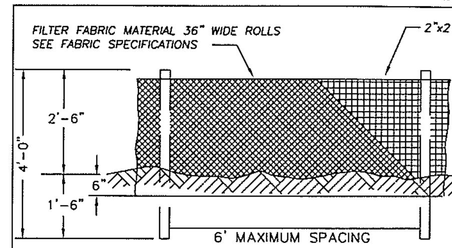

FRONT VIEW
NTS

SEDIMENT FENCE FABRIC SPECIFICATIONS
(Woven Polyproylene sediment fence fabric)

PROPERTY	TEST PROCEDURE	MIN. FABRIC VALUE
Grab Tensile Strength	ASTM D-4632	180 lbs.
Grab elongation	ASTM D-4632	15%
trapezoid Tear	ASTM D-4533	70 lbs.
Mullen Burst	ASTM D-3786	300 psi.
Puncture	ASTM D-4833	80 lbs.
Permilivity	ASTM D-4491	0.07 sec-1
Permeability	ASTM D-4491	.005 cm/sec
A.O.S.	ASTM D-4751	50 U.S. Sieve
UV Resistance(500 hrs)	ASTM D-4355	90%

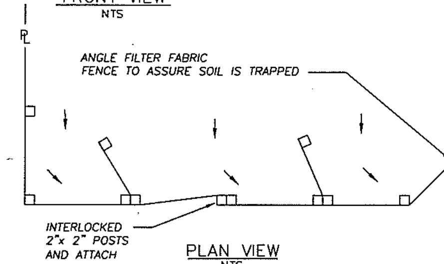

PLAN VIEW
NTS

NOTES
1. THIS SEDIMENT BARRIER UTILIZES STANDARD STRENGTH OR EXTRA STRENGTH SYNTHETIC FILTER FABRICS. IT IS DESIGNED FOR SITUATIONS IN WHICH ONLY SHEET OR OVERLAND FLOWS ARE EXPECTED. (SEE FABRIC SPECIFICATIONS ABOVE)
2. BURY BOTTOM OF FILTER FABRIC 6" VERTICALLY BELOW FINISHED GRADE.
3. POST ARE TO BE 2"x2" FIR, PINE OR STEEL FENCE POSTS.
4. POST TO BE INSTALLED ON UPHILL SIDE OF SLOPE.
5. COMPACT BOTH SIDES OF FILTER FABRIC TRENCH.
6. SEDIMENT FENCE TO BE SPACED ON SLOPES PER TABLE BELOW.

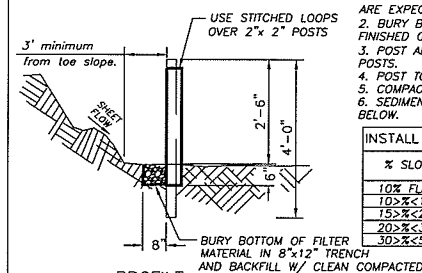

PROFILE
NTS

INSTALL PARALLEL ALONG CONTOURS AS FOLLOWS		
% SLOPE	SLOPE	MAX. SPACING ON SLOPE
10% FLATTER	10:1 OR FLATTER	300 ft.
10>%<15	10:1>x<7.5:1	150 ft.
15>%<20	7.5:1>x<5:1	100 ft.
20>%<30	5:1>x<3.5:1	50 ft.
30>%<50	3.5:1>x<2:1	25 ft.

NO.	REVISIONS	DATE	BY

DWG: E-4.DWG

Department of Public Works
CLARK COUNTY
WASHINGTON
proud past, promising future

STANDARD SEDIMENT FENCE

APPROVED
COUNTY ENGINEER — 01/01/04 DATE

STANDARD E-4
PLAN No.
DESIGNED SCH
DRAWN SCH
DATE 07/07/03

PRELIMINARY

STANDARD NOTES FOR EROSION CONTROL PLAN

1. The Contractor shall install and maintain BMP's as shown and perform all actions necessary to prevent erosion, and control sediment from leaving the construction site. Site Contractor shall comply with Clark County Code Chapter 40.380.050.

2. All erosion control measures shall be in-place and in working condition prior to disturbing and exposing any soil surfaces (i.e. silt fence, construction entrance, sedimentation barriers, sedimentation traps).

3. All erosion prevention and control BMP's shall be maintained and repaired as needed to insure continued performance of their intended function. Needed repairs shall be made as soon as practicable. They are to remain in place and operational during all phases of construction. Construction activities shall not continue or resume until repairs to erosion control facilities are made and the facilities are functional. Any sediment leaving the site or discharging to a sensitive area shall be stopped and controlled immediately. Contaminated areas shall be cleaned and restored.

4. Clearing limits and work area limits shall be delineated and marked. Do not disturb more area than needed for construction requirements.

5. All sensitive or critical areas (wetlands, steep slopes, natural waterways), and buffers shall all be clearly delineated and clearly marked, and protected from sediment deposition.
6. Sediment laden runoff shall be prevented from entering all existing storm water catch basins and inlets affected by construction.

7. No exposed, bare soils shall remain unstabilized for more than two days during the period October 1 thru April 30 or for more than seven days during the period of May 1 through September 30. All disturbed soil surfaces shall be stabilized by a suitable application of "Best Management Practices".

8. Where feasible, no more than 500 feet of trench shall be open at one time. Excavated material shall be placed on the up-hill side of trenches provided it does not conflict with safety requirements.

9. Dewatering devices shall discharge into a sediment trap or sediment pond. No discharge shall be made to a paved street or stormwater collection system without first removing sediment.

10. Cut and fill slopes shall be constructed in a manner that will minimize erosion. Erosion shall be controlled and prevented by such measures as roughening the surface, installation of interceptor ditches, terracing, covering with matting, mulch or plastic sheeting. Runoff shall be prevented from entering a slope and from undercutting the base of slopes.

11. Any soil or debris transported onto roadways and sidewalks shall be removed. Deposits shall be completely removed by shoveling and/or sweeping. Washing shall not be utilized unless specifically approved in writing by the County.

12. All permanent infiltration systems shall be isolated and protected from sediment laden runoff entering to avoid risk of reducing the ability of the systems to infiltrate. Isolation and protection shall not be removed until the drainage area tributary to the system is completely stabilized.

CONTINUED ON SHEET 2

NO.	REVISIONS	DATE	BY

DWG: ECN1.DWG

Department of Public Works
CLARK COUNTY
WASHINGTON
proud past, promising future

STANDARD NOTES FOR EROSION CONTOL PLAN

APPROVED
COUNTY ENGINEER — 01/01/04 DATE

STANDARD ECN1
PLAN No.
DESIGNED SCH
DRAWN SCH
DATE 08/02/03

STANDARD NOTES FOR EROSION CONTROL PLAN (CONTINUED)

13. All conveyance channels, both temporary and permanent shall be stabilized to prevent erosion of the channel. Stabilization shall extend to areas at outlets and downstream reaches vulnerable to erosion resulting from flow discharging from the channel.

14. If BMP's shown are utilized but are insufficient to prevent sediment from reaching water bodies, adjacent properties, or public rights-of-way; additional BMP's shall be implemented immediately to prevent further encroachment of sediment.

15. Stabilized areas shall be provided for employee parking and storage of construction materials. Erodeable stockpiles of earthen materials, such as topsoil, silty and clayey soils; and landscape materials, shall be covered when not being incorporated in the work. Erosion control BMP's shall be utilized as necessary to prevent sediment laden runoff from leaving or sediment being transported from these areas from vehicle activity.

16. All pollutants other than sediment that occur during construction shall be handled and disposed of in a manner that does not cause contamination of storm water.

17. The Contractor shall keep an inspection log of the condition of the erosion control facilities. Erosion control facilities shall be inspected at least weekly and after each rainfall. The inspection log shall be kept at the project site at a designated location and shall be available for review by the County. An individual that has successfully completed the County's Erosion Control Certification course shall perform inspections and maintain the log.

18. All temporary BMP's shall be removed within 30 days after final site stabilization is achieved. Trapped sediment shall be deposited and stabilized on site. Areas disturbed resulting from removal shall be permanently stabilized.

19. Construction shall not be considered complete and acceptable until all disturbed soil surfaces have been protected from erosion with permanent landscaping, covering with impervious surfaces, restored to original undisturbed condition or permanently stabilized.

20. Vegetated stabilization and landscaping shall be fertilized, watered and maintained to insure that growth of vegetation is established and sustained.

21. During dry weather construction periods the contractor shall provide project-specific dust control measures that may include: Seeding, Mulching, Matting, Water, Tackifier, or Chemical Soil Stabilizers. The contractor shall maintain the dust control measures through dry weather periods until all disturbed areas have been stabilized. Immediately re-stabilize areas disturbed by contractor's operations or other activities (wind, water, vandalism, etc.).

22. Entry onto the construction site shall be restricted to a single approved entrance as shown on the plan.

23. Maintenance and repair of heavy equipment and vehicles which involve potential contaminants (oil,solvents,hydraulic fluid, etc.) must be conducted in a manner which prevents contamination of soils, surface water and ground water. Tarps, drip pans, or other appropriate measures shall be used as necessary.

24. Stripping, topsoil, and unsuitable material stockpiles shall be hydroseeded with "regreen wheat x wheat grass hybrid" by Hobbs and Hobkins (or approved equal). Maintenance of stockpile areas and reapplication of hydroseed covering shall be required if bare soil is present. During winter and wet weather conditions, stockpiles shall be covered with plastic sheeting per detail E-16.

SHEET 2 OF 2

NO.	REVISIONS	DATE	BY

DWG: ECN2.DWG

Department of Public Works
CLARK COUNTY
WASHINGTON
proud past, promising future

STANDARD NOTES (CONTINUED) FOR EROSION CONTOL PLAN

APPROVED
COUNTY ENGINEER — 01/01/04 DATE

STANDARD ECN2
PLAN No.
DESIGNED SCH
DRAWN SCH
DATE 07/22/03

DESIGNED	BK/JM
DRAWN	KB/RK
CRP	340622
HOR.	SEE SHEET
VERT.	SEE SHEET
DATE	10/31/05
DWG:	EC04
SHEET	X OF X

CALL 48 HOURS BEFORE YOU DIG
1-800-553-4344
"It's the Law"
NORTHWEST UTILITIES NOTIFICATION CENTER

BRUCE A. KLUG
STATE OF WASHINGTON
39868
REGISTERED PROFESSIONAL ENGINEER
EXPIRES: APRIL 7, 2006

ENGINEERING PROGRAM
DESIGN SECTION

NE 119TH STREET WEST
EROSION CONTROL DETAILS

proud past, promising future
CLARK COUNTY
WASHINGTON

N:\CIP\PROJECTS\340622-NE119thStWest-SalmonCrAve-NE72ndAve\DESIGN\DWGS\Ec01-6.dwg, EC04, 10/25/2005 5:06:58 PM, bagleyk

N:\CIP\PROJECTS\340622-NE119thSt\West-SalmonCrAve-NE72ndAve\DESIGN\DWGS\RD1-2.dwg, Layout1, 10/25/2005 5:10:55 PM, begleyk

F2 — TYPE 2 RAMP

NEW CONSTRUCTION
FOR USE WITH SIDEWALKS LOCATED ANYWHERE IN THE RIGHT-OF-WAY

NOTES:

1. RAMPS TO BE POURED SEPARATELY FROM SIDEWALK.
2. CROSSWALKS TO BE CENTERED ON SIGNAL POLE TO POLE CENTERLINES. CURB RAMP TO BE CENTERED WITHIN CROSSWALK.
3. SIDEWALK SLOPE TO BE 2% MAXIMUM RADIALLY AROUND CORNER SECTION. SINGLE RAMPS CAN BE INSTALLED.
4. RAMP SLOPES SHALL NOT BE STEEPER THAN 12H:1V.

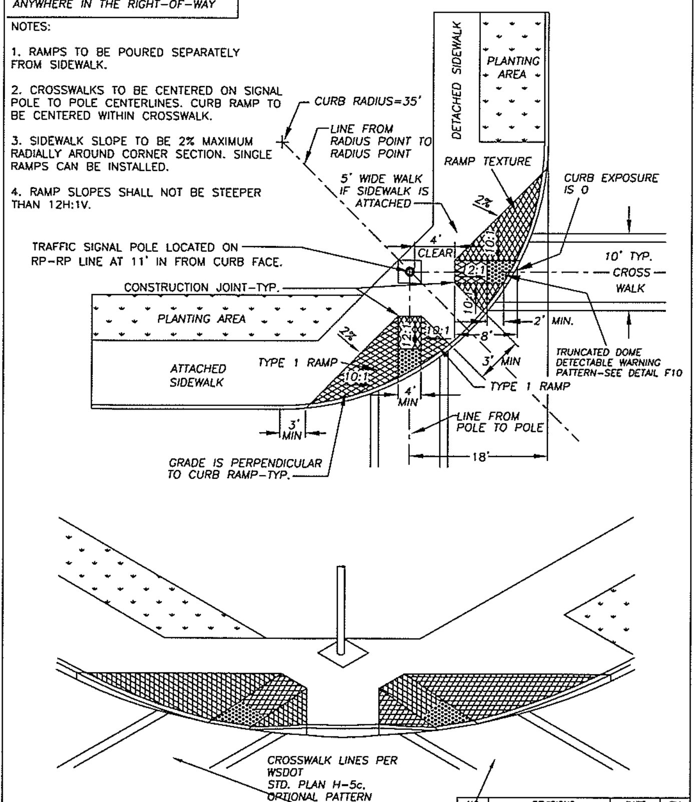

NO.	REVISIONS	DATE	BY
1	TRUNCATED DOMES	6/14/03	SCH

Department of Public Works — CLARK COUNTY WASHINGTON — proud past, promising future
TYPE 2 RAMP — APPROVED — COUNTY ENGINEER — 8/22/00 — DATE — F2 — DESIGNED DB — DRAWN KB — DATE 7/24/00

F10 — TRUNCATED DOME DETECTABLE WARNING PATTERN

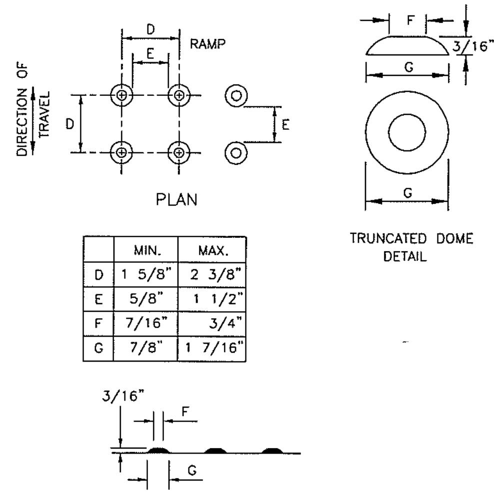

	MIN.	MAX.
D	1 5/8"	2 3/8"
E	5/8"	1 1/2"
F	7/16"	3/4"
G	7/8"	1 7/16"

NOTES

1. AVOID PLACING DRAINAGE STRUCTURES, JUNCTION BOXES OR OTHER OBSTRUCTIONS IN FRONT OF RAMP ACCESS AREA.
2. THE DETECTABLE WARNING PATTERNS CAN BE CREATED BY ACCEPTABLE MEANS THAT WILL ACHIEVE THE TRUNCATED DOME DIMENSIONS AND SPACING SHOWN.
3. PLACE TRUNCATED DOME DETECTABLE WARNING TEXTURE IN THE LOWER 24" OF THE THROAT OF THE RAMP ONLY. ARRANGE DOMES USING IN-LINE PATTERN ONLY AS SHOWN. COLOR OF TEXTURE (COATING) SHALL BE SAFETY YELLOW IN COMPLIANCE WITH WSDOT STD. SPEC. OR AS INSTRUCTED BY COUNTY INSPECTOR.
4. FOR CONSTRUCTION OF SIDEWALK RAMPS OUTSIDE OF PUBLIC RIGHT-OF-WAY, CHECK WITH STATE BUILDING CODES.

Department of Public Works — CLARK COUNTY WASHINGTON — proud past, promising future
TRUNCATED DOME DETECTABLE WARNING PATTERN — APPROVED — COUNTY ENGINEER — 01/01/04 — STANDARD F10

F12 — SIDEWALK DETAIL

JOINT SPACING:
SURFACE JOINTS - 5'
CONTROL JOINTS - 15'
EXPANSION JOINTS AT STRUCTURES, OBSTRUCTIONS, OR AS DIRECTED BY THE INSPECTOR.

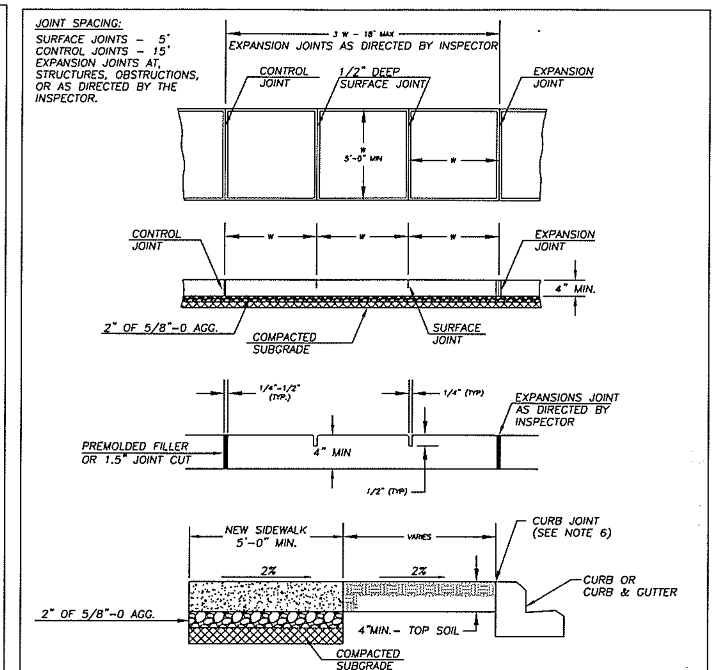

NOTES:

1. CONCRETE SHALL BE 3,000 PSI MIN. (CLASS 3000), 3 1/2" SLUMP (± 1")
2. FINISH SHALL BE MEDIUM BROOM PERPENDICULAR TO PEDESTRIAN TRAFFIC UNLESS OTHERWISE DIRECTED.
3. ALL EXISTING EDGES SHALL BE SAWCUT.
4. NO FILLER REQUIRED FOR SURFACE JOINTS.
5. ALL JOINTS AND EDGES SHALL BE FINISHED WITH 1/4" RADIUS EDGER (3" SMOOTH EACH SIDE)
6. FOR SIDEWALKS ADJACENT TO THE CURB AND POURED AT THE SAME TIME AS THE CURB, THE JOINT BETWEEN THEM SHALL BE A TROWELED JOINT WITH A MIN. 1/2" RADIUS.

NO.	REVISIONS	DATE	BY
1	CHANGE SUBGRADE &	03/28/02	KB
2	2" BASE AGG. & NOTES	10/07/02	SCH

Department of Public Works — CLARK COUNTY WASHINGTON — proud past, promising future
SIDEWALK DETAIL — APPROVED — COUNTY ENGINEER — 01/01/04 — STANDARD F12

F14 — DETAIL - TYPE 1 CEMENT CONCRETE APPROACH

NOTES:

1. A MINIMUM 3' WIDE ACCESSIBLE ROUTE SHALL BE MAINTAINED IN ALL PEDESTRIAN ACCESSIBLE AREAS.
2. CONTRACTION POINTS SHALL BE PLACED ALONG SIDEWALKS IN ACCORD WITH SIDEWALK DETAIL. ALL JOINTS SHALL BE CLEANED AND EDGED.
3. CHANGES IN LEVEL UP TO 1/4" MAY BE VERTICAL AND WITHOUT EDGE TREATMENT. CHANGES IN LEVEL BETWEEN 1/4" AND 1/2" SHALL BE BEVELED WITH A SLOPE NO GREATER THAN 2:1.
4. CEMENT CONCRETE APPROACHES SHALL BE CONSTRUCTED OF AIR-ENTRAINED CLASS 3000 AND MAY BE POURED INTEGRAL WITH CURB.
5. EXISTING CURB, GUTTER AND SIDEWALK TO BE SAWCUT AND REMOVED FOR INSTALLATION OF APPROACH.
6. COMMERCIAL DRIVEWAY REQUIRES REINFORCING STEEL (6"x6" 10 GA WIRE MESH) MIN. 3" COVER.
7. 3" DEPTH 3/4"-0 CRUSHED AGGREGATE BASE COMPACTED TO 95% OF MAX. DRY DENSITY.
8. SUBGRADE PREPARATION PER WSDOT STD. SPEC. 2-06.3(1).

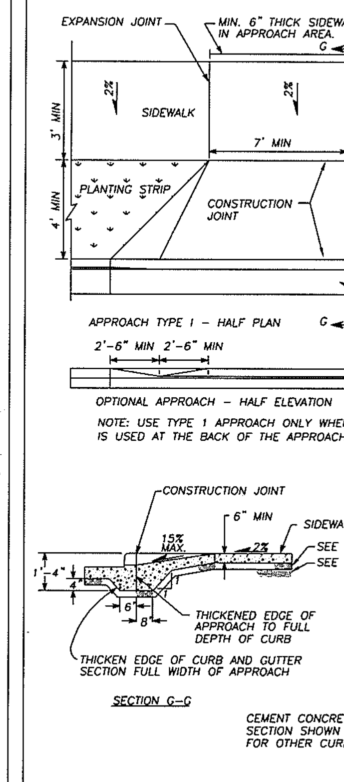

NO.	REVISIONS	DATE	BY
1	NOTE #6, 7, 8	10/09/02	SCH

Department of Public Works — CLARK COUNTY WASHINGTON — proud past, promising future
DETAIL - TYPE 1 CEMENT CONCRETE APPROACH — APPROVED — COUNTY ENGINEER — 8/22/00 — F14

F3 — TYPE 3 RAMP

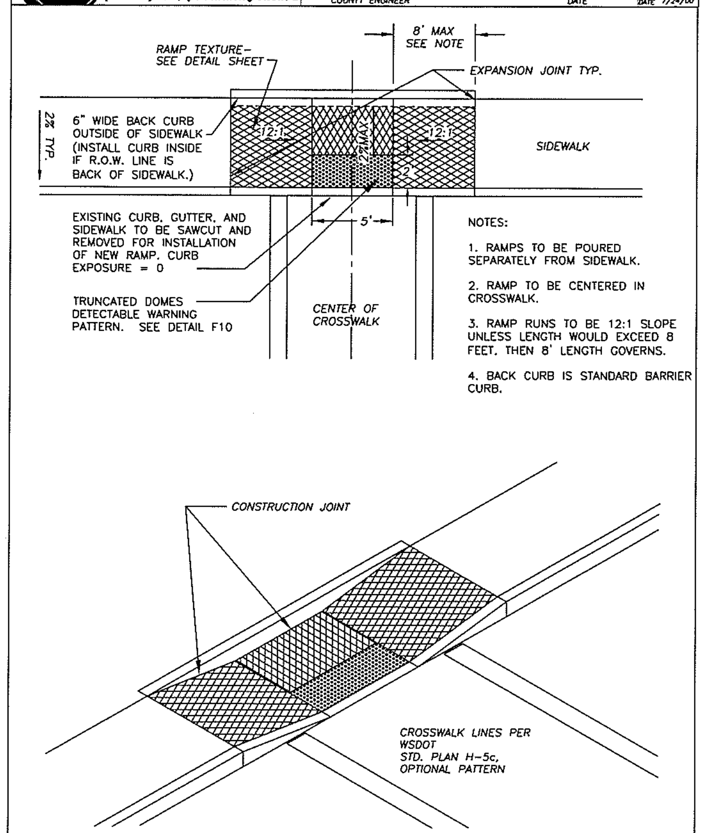

NOTES:

1. RAMPS TO BE POURED SEPARATELY FROM SIDEWALK.
2. RAMP TO BE CENTERED IN CROSSWALK.
3. RAMP RUNS TO BE 12:1 SLOPE UNLESS LENGTH WOULD EXCEED 8 FEET, THEN 8' LENGTH GOVERNS.
4. BACK CURB IS STANDARD BARRIER CURB.

NO.	REVISIONS	DATE	BY
1	TRUNCATED DOME PATTERN	6/15/03	SCH

Department of Public Works — CLARK COUNTY WASHINGTON — proud past, promising future
TYPE 3 RAMP — APPROVED — COUNTY ENGINEER — 8/22/00 — F3

F11 — RAMP TEXTURE DETAIL

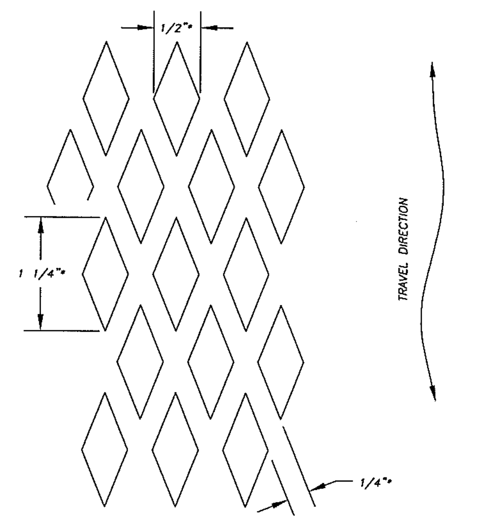

RAMP TEXTURE DETAIL

RAMP TEXTURE IS TO BE DONE WITH AN EXPANDED METAL GRATE PLACED AND REMOVED FROM WET CONCRETE TO LEAVE A DIAMOND PATTERN AS SHOWN. THE LONG AXIS OF THE DIAMOND PATTERN SHALL BE IN THE DIRECTION OF TRAVEL. GROOVES SHALL BE 1/8" DEEP AND 1/4" WIDE. ALTERNATIVE TEXTURE PATTERNS SHALL BE APPROVED BY REVIEWING AUTHORITY BEFORE USE.

Department of Public Works — CLARK COUNTY WASHINGTON — proud past, promising future
RAMP TEXTURE DETAIL — APPROVED — COUNTY ENGINEER — 8/22/00 — F11

F13 — SIDEWALK MAILBOX PLACEMENT

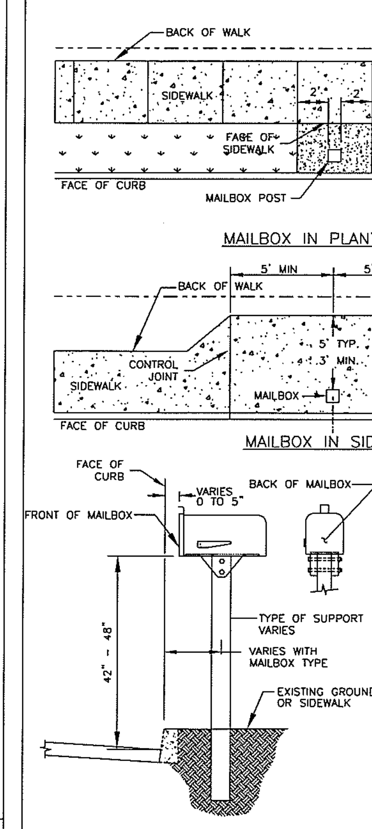

NOTES:

1. SEE CURRENT WSDOT STANDARD PLAN No. H-12 FOR MAILBOX, POST, BRACKET AND OTHER INSTALLATION DETAILS.
2. MAILBOXES MUST BE POSTMASTER APPROVED. CONTACT MIKE WENTZEL (MAINTENANCE MANAGER) AT 992-5052.
3. LOCATION OF MAILBOXES ARE SUBJECT TO APPROVAL BY COUNTY ENGINEERING FOR ACCESS AND SIGHT DISTANCE REQUIREMENTS. CONTACT ENGINEERING SERVICES AT 397-2375 ext. 4997
4. INSTALL EXPANSION JOINT MATERIAL AROUND MAILBOX POST WHEN SET IN SIDEWALK.
5. EXTEND SIDEWALK JOINTS THROUGH WIDENED SIDEWALK SECTION.
6. COLLECTION BOX UNITS (CBU) AND CONCRETE BASE ARE INSTALLED BY THE U.S. POSTAL SERVICE. SEE NOTE 2 FOR CONTACT.
7. A MAILBOX TURNOUT CONFORMING TO DETAIL F13b IS REQUIRED FOR ALL STREETS EXCEPT ACCESS AND SUBCOLLECTOR STREETS WHERE THE POSTED SPEED LIMIT IS 25 MPH OR LESS.

WSDOT STD. PLANS WEB SITE ADDRESS:
http://www.wsdot.wa.gov/eesc/design/designstandards/HTM/TOC.pdf

Department of Public Works — CLARK COUNTY WASHINGTON — proud past, promising future
SIDEWALK MAILBOX PLACEMENT — APPROVED — COUNTY ENGINEER — 01/01/04 — STANDARD F13

F15 — CEMENT CONCRETE APPROACH DETAIL - TYPE 2

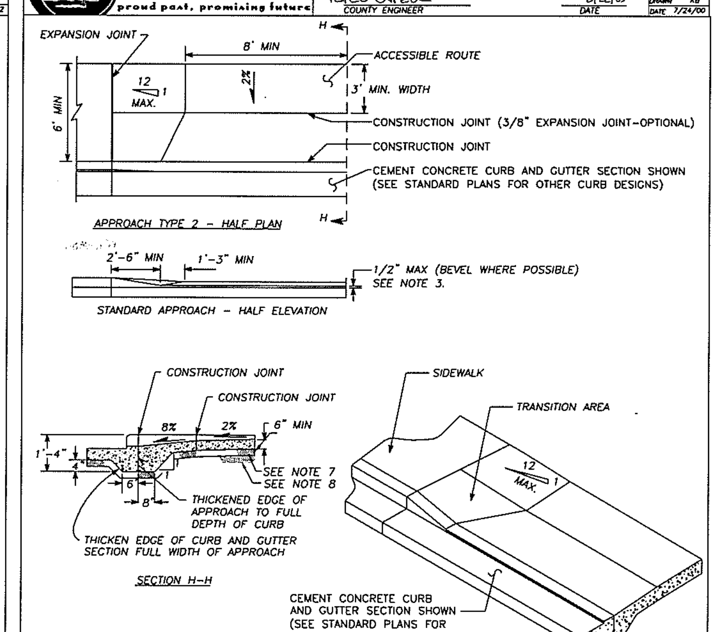

NOTES:

1. A MINIMUM 3' WIDE ACCESSIBLE ROUTE SHALL BE MAINTAINED IN ALL PEDESTRIAN ACCESSIBLE AREAS.
2. CONTRACTION JOINTS SHALL BE PLACED ALONG SIDEWALKS IN ACCORD WITH SIDEWALK DETAIL. ALL JOINTS SHALL BE CLEANED AND EDGED.
3. CHANGES IN LEVEL UP TO 1/4" MAY BE VERTICAL AND WITHOUT EDGE TREATMENT. CHANGES IN LEVEL BETWEEN 1/4" AND 1/2" SHALL BE BEVELED WITH A SLOPE NO GREATER THAN 2:1.
4. CEMENT CONCRETE APPROACHES SHALL BE CONSTRUCTED OF AIR-ENTRAINED CONCRETE CLASS 3000 AND MAY BE POURED INTEGRAL WITH CURB.
5. EXISTING CURB, GUTTER AND SIDEWALK TO BE SAWCUT AND REMOVED FOR INSTALLATION OF APPROACH.
6. COMMERCIAL DRIVEWAY REQUIRES REINFORCING STEEL (6"x6" 10 GA WIRE MESH) MIN. 3" COVER
7. 3" DEPTH 3/4"-0 CRUSHED AGGREGATE BASE COMPACTED TO 95% OF MAX. DRY DENSITY.
8. SUBGRADE PREPARATION PER WSDOT STD. SPEC. 2-06.3(1).

NO.	REVISIONS	DATE	BY
1	NOTES #6, 7, 8	10/09/02	SCH

Department of Public Works — CLARK COUNTY WASHINGTON — proud past, promising future
CEMENT CONCRETE APPROACH DETAIL - TYPE 2 — APPROVED — COUNTY ENGINEER — 8/22/00 — F15

DESIGNED	BK/JM
DRAWN	KB/RK
CRP	340622
HOR.	SEE SHEET
VERT.	SEE SHEET
DATE	10/31/05
DWG:	RD1
SHEET	X OF X

CALL 48 HOURS BEFORE YOU DIG 1-800-553-4344 "It's the Law" NORTHWEST UTILITIES NOTIFICATION CENTER

EXPIRES APRIL 7, 2006

ENGINEERING PROGRAM DESIGN SECTION

NE 119TH STREET WEST ROADWAY DETAILS

CLARK COUNTY WASHINGTON — proud past, promising future

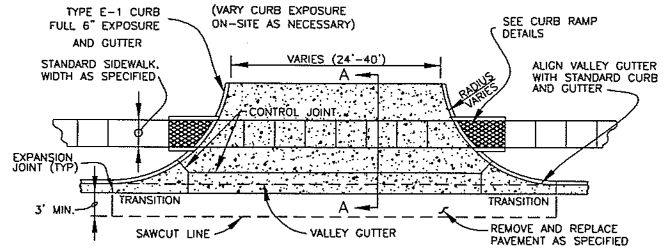

PLAN VIEW

COMMERCIAL DRIVEWAY ENTRANCE

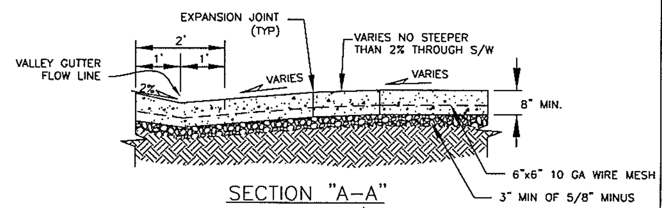

SECTION "A-A"

NOTES:

1. CONCRETE SHALL BE 3300 PSI (MIN. BREAKING STRENGTH @ 28 DAYS) WITH 3" SLUMP (±1"). TOTAL AIR CONTENT (% BY VOLUME OF CONCRETE) SHALL NOT BE LESS THAN 4% OR MORE THAN 7%. MEDIUM BROOM FINISH PARALLEL TO DRIVEWAY CENTERLINE.
2. ALL JOINTS SHALL BE FINISHED WITH 1/4" RADIUS EDGE UNLESS OTHERWISE NOTED.
3. DRIVEWAYS EXCEEDING 15' IN TOTAL WIDTH SHALL HAVE ADDITIONAL LONGITUDINAL JOINTS AS DIRECTED. CONTROL JOINT SPACING SHALL NOT EXCEED 15'.
4. DRIVEWAY SHALL BE CONSTRUCTED WITH REINFORCING STEEL (6x6 10 GA WIRE MESH), MIN. 3" COVER.
5. ALL EXISTING EDGES SHALL BE SAW CUT.
6. 3" DEPTH 5/8"-0 CRUSHED AGGREGATE BASE COMPACTED TO 95% OF MAX. DRY DENSITY.
7. SUBGRADE PREPARATION PER WSDOT STD. SPEC. 2-06.3(1).
8. EXISTING CURB SHALL BE REMOVED TO EXISTING JOINT OR SAWCUT SUCH THAT 3' MIN. OF NEW STREET SECTION IS CONSTRUCTED ADJACENT TO NEW DRIVEWAY.
9. MAXIMUM 2% CROSS SLOPE ACROSS PEDESTRIAN CROSSING.
10. CURB RADIUS PER TABLES 40.350.030-2 THRU 6, OR AS APPROVED BY COUNTY ENGINEER.

NO.	REVISIONS	DATE	BY

DWG: F17.DWG

Department of Public Works — CLARK COUNTY WASHINGTON — proud past, promising future

MAJOR COMMERCIAL CONCRETE APPROACH — F17

APPROVED — COUNTY ENGINEER — 01/01/04 DATE — DESIGNED SCH — DRAWN — DATE 07/18/03

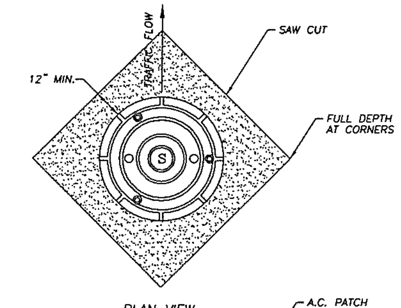

PLAN VIEW

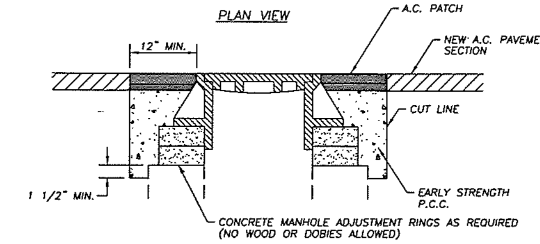

STEPS 2,3, & 4

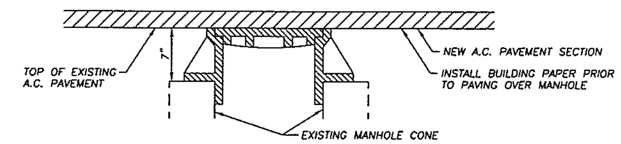

STEP 1

STEP 1 COVER EXSITING MANHOLE WITH BUILDING PAPER AND CONSTRUCT A.C. PAVEMENT OVER TOP OF MANHOLE.
STEP 2 SAW CUT AND REMOVE PAVEMENT AROUND MANHOLE 12" MIN. FROM MANHOLE FRAME.
STEP 3 RAISE MANHOLE FRAME AND COVER USING CONCRETE RINGS AND MECHANICAL ADJUSTMENT DEVICES TO FINISH GRADE MATCHING PROFILE AND CROSS SLOPE.
STEP 4 BACKFILL WITH EARLY STRENGTH P.C.C. AND A.C. TO DEPTHS AS DIRECTED.

NO.	REVISIONS	DATE	BY

DWG:

Department of Public Works — CLARK COUNTY WASHINGTON — proud past, promising future

F27

APPROVED — COUNTY ENGINEER — 9/12/00 DATE — DESIGNED — DRAWN — DATE

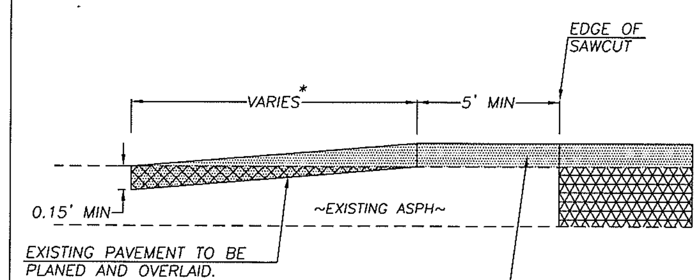

EXISTING PAVEMENT TO BE PLANED AND OVERLAID.

0.15' MIN CLASS "A" ACP OVERLAY TO EXTEND MIN 5' FROM SAWCUT.

* LENGTH VARIES TO MAKE SMOOTH TRANSITION TO EXISTING ROAD GRADE. (MINIMUM 15 FEET)

TO BE USED AS AN ALTERNATIVE IN LIEU OF FULL LANE REMOVAL AND REPLACEMENT WHEN APPROVED BY CLARK COUNTY.

NO.	REVISIONS	DATE	BY
1	NOTE	03/09/01	BK
2	FIG 1	05/02/01	DS
3	CHANGED ACP CLASS	03/28/02	KB

DWG: U7.DWG

Department of Public Works — CLARK COUNTY WASHINGTON — proud past, promising future

BUTT JOINT PLANING AND OVERLAY DETAIL — STANDARD U7 PLAN No.

APPROVED — COUNTY ENGINEER — 9/30/02 DATE — DESIGNED — DRAWN — DATE 3/28/02

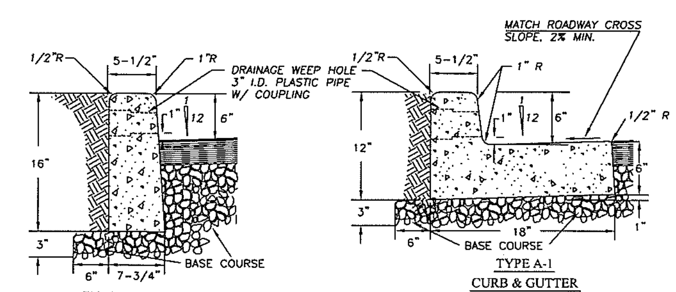

TYPE E-1 CURB

SEE WDOT STANDARD PLAN No. F-1

TYPE A-1 CURB & GUTTER

SEE WDOT STANDARD PLAN No. F-1

NOTES

1. CONCRETE SHALL BE 3000 PSI MIN. (CLASS 3000) 3 1/2" SLUMP (MAX.)
2. CURBS ADJACENT TO PAVEMENT OR SIDEWALK TO HAVE EXPANSION AND/OR CONTRACTION JOINTS TO MATCH EXISTING PATTERNS.
3. 3/8" EXPANSION JOINTS TO BE PROVIDED AT EACH POINT OF TANGENCY OF THE CURB, COLD JOINTS, EACH SIDE OF INLET STRUCTURES AND DRIVEWAYS. MATERIAL TO BE PRE-MOLDED, ASPHALT IMPREGNATED AND NON EXTRUDING.
4. CONTRACTION JOINT SPACING NOT TO EXCEED 15 FEET. THE DEPTH OF THE JOINT SHALL BE AT LEAST 1-1/2 INCHES. WEEP HOLES TO BE CENTERED WITH CONTRACTION JOINTS.
5. BASE COURSE SHALL BE TO SUBGRADE OF STREET SECTION OR 3 INCHES, WHICHEVER IS GREATER, AND SHALL EXTEND 6" BEHIND THE CURB.
6. DRAINAGE WEEP HOLES TO BE 3" I.D. PLASTIC PIPE WITH COUPLING. FINISH PIPE END FLUSH WITH FACE OF CURB.
7. GROUT ANY VOIDS IN CONCRETE SURROUNDING PIPE.
8. DRAINAGE ACCESS THROUGH EXISTING CURBS SHALL BE CORE DRILLED.
9. CURB TO BE BRUSH FINISHED. ALL EXISTING EDGES SHALL BE SAWCUT.
10. ALL MATERIALS AND WORKMANSHIP FOR TYPE E-1 & A-1 SHALL BE IN ACCORDANCE WITH WDOT STANDARD PLAN No. F-1, APPROVED 7/18/97 OR MOST CURRENT REVISION.

NO.	REVISIONS	DATE	BY

DWG: F18.DWG

Department of Public Works — CLARK COUNTY WASHINGTON — proud past, promising future

CONCRETE CURBS — STANDARD F18 PLAN No.

APPROVED — COUNTY ENGINEER — 01/01/04 DATE — DESIGNED SCH — DRAWN SCH — DATE 07/24/02

OPEN CUT UTILITY TRENCH BACKFILL DETAIL (COLLECTOR OR ARTERIAL)

SURFACING:

1. All A.C.P. shall be saw cut to provide a straight, clean edge prior to paving.
2. The cut line shall be one continuous straight line from the outer excavation limits of manhole, valve box, etc. to manhole, valve box, etc.
3. Pave with an 0.5 ft. minimum compacted depth A.C.P., or match existing or design section, whichever is greater.
4. Lifts for A.C.P. (Class A) shall be 0.15 ft. minimum and 0.35 ft. maximum for non-surface lifts (0.25' maximum for surface lift); the temperature shall be 250 degree minimum, 350 degree maximum, compacted to 92% of the theoretical maximum.
5. All joints shall be tacked, sealed and sanded.
6. Trench shall be plated until paved.
7. For longitudinal installation, full lane width including turn lanes restoration shall be required or as directed by Clark County. For transverse installation refer to surfacing restoration of detail U6. See Section 12.20A.120.C.

BASE COURSE:

1. 0.80 ft. minimum depth (1-1/4" minus) C.S.B.C. (W.S.D.O.T. approved material).
2. Compacted to 95% of maximum density. See trench zone.
3. Equivalent depth of A.T.B. may be substituted.
4. For transverse or diagonal trenches in existing roadway pavement, CDF will be used from the bottom of full pavement section to a maximum CDF section of 3 feet or to 6" above the top of the pipe, which ever is less. See note 13 of Std. Plan UGN of this Manual.

TRENCH ZONE:

1. Granular backfill as approved by local agency or W.S.D.O.T. specifications for granular backfill. Compacted to 95% of maximum density in the trench zone using Method C compaction as per Section 2-03.3(14)C.
2. Native material may be used if approved prior to construction by Clark County.
3. Trench zone width -- see below.

PIPE ZONE:

1. Pipe zone material as specified by utility owner, and shall conform to section 9-03.12(3) WSDOT Specs.
2. 1.0 ft. max. from top of the pipe. 6" from top of pipe when CDF backfill used.

CONDITIONS:

1. A copy of the permit and requirements shall be on the job site at all times.
2. The permit holder shall be responsible for all restoration and maintenance of ditches, shoulders, driveways, landscaping, etc.
3. Call Clark County at 397-2446 twenty-four hours prior to commencing work.

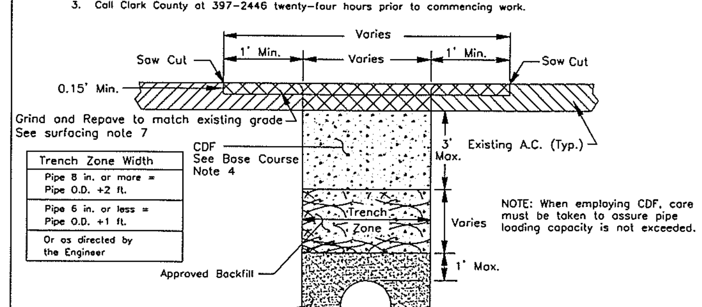

Trench Zone Width
Pipe 8 in. or more = Pipe O.D. +2 ft.
Pipe 6 in. or less = Pipe O.D. +1 ft.
Or as directed by the Engineer

NOTE: When employing CDF, care must be taken to assure pipe loading capacity is not exceeded.

NO.	REVISIONS	DATE	BY
1	ILLUSTRATIVE CHANGE	07/10/01	BK
2	Notes: & Det. Rev. 7	12/07/02	SCH

DWG: U1.DWG

Department of Public Works — CLARK COUNTY WASHINGTON — proud past, promising future

OPEN CUT UTILITY TRENCH BACKFILL DETAIL COLLECTOR OR ARTERIAL ROADWAY — STANDARD U1 PLAN No.

APPROVED — COUNTY ENGINEER — 7/20/01 DATE — DESIGNED SCH — DRAWN — DATE 04/25/03

DESIGNED	BK/JM
DRAWN	KB/RK
CRP	340622
HOR.	SEE SHEET
VERT.	SEE SHEET
DATE	10/31/05
DWG:	RD2
SHEET	X OF X

CALL 48 HOURS BEFORE YOU DIG 1-800-553-4344 "It's the Law" NORTHWEST UTILITIES NOTIFICATION CENTER

EXPIRES APRIL 7, 2006

ENGINEERING PROGRAM DESIGN SECTION

NE 119TH STREET WEST ROADWAY DETAILS

CLARK COUNTY WASHINGTON — proud past, promising future

N:\CIP\PROJECTS\340622-NE119thStWest-SalmonCrAve-NE72ndAve\DESIGN\DWGS\RD1-2.dwg, Layout1 (2), 10/25/2005 5:11:16 PM, begleyk

NOTES:

1. MANHOLES SHALL BE CONSTRUCTED IN ACCORDANCE WITH AASHTO M199 UNLESS OTHERWISE SHOWN ON PLANS OR NOTED IN THE WSDOT/APWA STANDARD SPECIFICATIONS.
2. HANDHOLDS IN ADJUSTMENT SECTION SHALL HAVE 3" MIN. CLEARANCE. SEE PLAN NO. D1.5, "MANHOLE DETAILS".
3. HANDHOLDS SHALL BE PLACED IN ALTERNATING GRADE RINGS ON OPPOSITE SIDES OF THE MANHOLE TO ALLOW ONE HAND HOLD BETWEEN THE LAST STEP AND THE TOP OF THE MANHOLE.
4. ALL REINFORCED CAST-IN-PLACE CONCRETE SHALL BE CLASS 4000. ALL PRECAST CONCRETE SHALL BE CLASS 4000. NON-REINFORCED CONCRETE IN CHANNEL AND SHELF SHALL BE CLASS 3000.
5. PRECAST BASES SHALL BE FURNISHED WITH CUTOUTS OR KNOCKOUTS. KNOCKOUTS SHALL HAVE A WALL THICKNESS OF 2" MIN. UNUSED KNOCKOUTS NEED NOT BE GROUTED IF WALL IS LEFT INTACT. PIPES SHALL BE INSTALLED ONLY IN FACTORY PROVIDED KNOCKOUTS UNLESS OTHERWISE APPROVED BY THE ENGINEER.
6. KNOCKOUT OR CUTOUT HOLE SIZE SHALL EQUAL PIPE OUTER DIAM. PLUS MANHOLE WALL THICKNESS. SEE MANHOLE DIMENSION TABLE BELOW.
7. MANHOLE RINGS AND COVERS SHALL BE IN ACCORDANCE WITH SEC. 7.05 AND MEET THE STRENGTH REQUIREMENTS SPECIFIED IN SECTION 9-05.12. MATING SURFACES SHALL BE FINISHED TO ASSURE NON-ROCKING FIT WITH ANY COVER POSITION.
8. ALL BASE REINFORCING STEEL SHALL HAVE A MIN. YIELD STRENGTH OF 60,000 PSI AND BE PLACED IN THE UPPER HALF OF THE BASE WITH 1" MIN. CLEARANCE.
9. FOR HEIGHTS OF 12' OR LESS, MIN. SOIL BEARING VALUE SHALL EQUAL 3,300 POUNDS PER SQUARE FOOT. FOR HEIGHTS OVER 12', MIN. SOIL BEARING VALUE SHALL EQUAL 3,800 POUNDS PER SQUARE FOOT.
10. FOR DETAILS SHOWING GRADE RING, LADDER, STEPS, HANDHOLDS, AND TOP SLABS, SEE PLAN NO. D1.5, "MANHOLE DETAILS."
11. INSIDE DROP MAXIMUM TO BE 4' VERTICAL DISTANCE I.E. TO I.E.
12. KNOCKOUTS TO BE USED WHEN STUB OUT PIPE IS 3' OR LESS.
13. MINIMUM 0.20' FALL BETWEEN INLET AND OUTLET. ANY REDUCTION IN THIS DESIGN REQUIREMENT MUST BE APPROVED BY REVIEWING AUTHORITY.
14. SEE THE WSDOT/APWA STANDARD SPECIFICATIONS SEC. 7-05.3 FOR JOINT REQUIREMENTS.

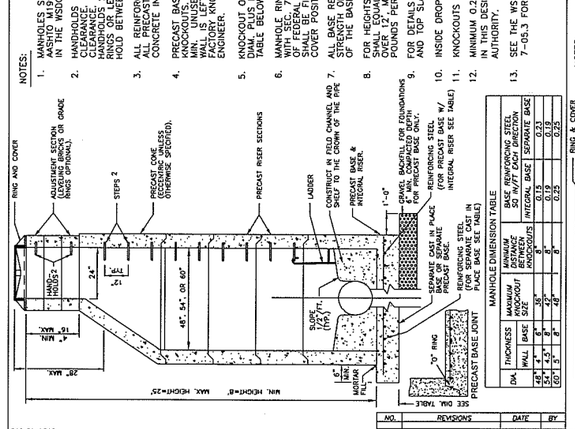

MANHOLE DIMENSION TABLE

DIA	THICKNESS WALL	THICKNESS BASE	MAXIMUM KNOCKOUT SIZE	MINIMUM DISTANCE BETWEEN KNOCKOUTS	BASE REINFORCING STEEL 50 lb/ft² EACH DIRECTION INTEGRAL BASE	BASE REINFORCING STEEL 50 lb/ft² EACH DIRECTION SEPARATE BASE
48"	4"	6"	36"	8"	0.15	0.23
54"	4.5"	6"	42"	8"	0.17	0.25
60"	5"	6"	48"	8"	0.19	0.28
72"	6"	8"	60"	12"	0.25	0.39
96"	8"	12"	84"	12"	0.39	0.59

NO.	REVISIONS	DATE	BY

DWG: D1-1.DWG

Department of Public Works
CLARK COUNTY WASHINGTON
proud past, promising future

STANDARD MANHOLE TYPE 1
48", 54", & 60"

APPROVED
Peter Capen
COUNTY ENGINEER
01/01/04
DATE

STANDARD D1.1
PLAN No.
DESIGNED SCH
DRAWN SCH
DATE 07/07/03

NOTES:

1. MANHOLES SHALL BE CONSTRUCTED IN ACCORDANCE WITH AASHTO M199 UNLESS OTHERWISE SHOWN ON PLANS OR NOTED IN THE WSDOT/APWA STANDARD SPECIFICATIONS.
2. HANDHOLDS IN ADJUSTMENT SECTION SHALL HAVE 3" MIN. CLEARANCE. SEE PLAN NO. D1.5, "MANHOLE DETAILS".
3. HANDHOLDS SHALL BE PLACED IN ALTERNATING GRADE RINGS ON OPPOSITE SIDES OF THE MANHOLE TO ALLOW ONE HAND HOLD BETWEEN THE LAST STEP AND THE TOP OF THE MANHOLE.
4. ALL REINFORCED CAST-IN-PLACE CONCRETE SHALL BE CLASS 4000. ALL PRECAST CONCRETE SHALL BE CLASS 4000. NON-REINFORCED CONCRETE IN CHANNEL AND SHELF SHALL BE CLASS 3000.
5. PRECAST BASES SHALL BE FURNISHED WITH CUTOUTS OR KNOCKOUTS. KNOCKOUTS SHALL HAVE A WALL THICKNESS OF 2" MIN. UNUSED KNOCKOUTS NEED NOT BE GROUTED IF WALL IS LEFT INTACT. PIPES SHALL BE INSTALLED ONLY IN FACTORY PROVIDED KNOCKOUTS UNLESS OTHERWISE APPROVED BY THE ENGINEER.
6. KNOCKOUT OR CUTOUT HOLE SIZE SHALL EQUAL PIPE OUTER DIAM. PLUS MANHOLE WALL THICKNESS. SEE MANHOLE DIMENSION TABLE BELOW.
7. MANHOLE RINGS AND COVERS SHALL BE IN ACCORDANCE WITH SEC. 7.05 AND MEET THE STRENGTH REQUIREMENTS SPECIFIED IN SECTION 9-05.12. MATING SURFACES SHALL BE FINISHED TO ASSURE NON-ROCKING FIT WITH ANY COVER POSITION.
8. ALL BASE REINFORCING STEEL SHALL HAVE A MIN. YIELD STRENGTH OF 60,000 PSI AND BE PLACED IN THE UPPER HALF OF THE BASE WITH 1" MIN. CLEARANCE.
9. FOR HEIGHTS OF 12' OR LESS, MIN. SOIL BEARING VALUE SHALL EQUAL 3,300 POUNDS PER SQUARE FOOT. FOR HEIGHTS OVER 12', MIN. SOIL BEARING VALUE SHALL EQUAL 3,800 POUNDS PER SQUARE FOOT.
10. FOR DETAILS SHOWING GRADE RING, LADDER, STEPS, HANDHOLDS, AND TOP SLABS, SEE PLAN NO. D1.5, "MANHOLE DETAILS."
11. INSIDE DROP MAXIMUM TO BE 4' VERTICAL DISTANCE I.E. TO I.E.
12. KNOCKOUTS TO BE USED WHEN STUB OUT PIPE IS 3' OR LESS.
13. MINIMUM 0.20' FALL BETWEEN INLET AND OUTLET. ANY REDUCTION IN THIS DESIGN REQUIREMENT MUST BE APPROVED BY REVIEWING AUTHORITY.
14. SEE THE WSDOT/APWA STANDARD SPECIFICATIONS SEC. 7-05.3 FOR JOINT REQUIREMENTS.

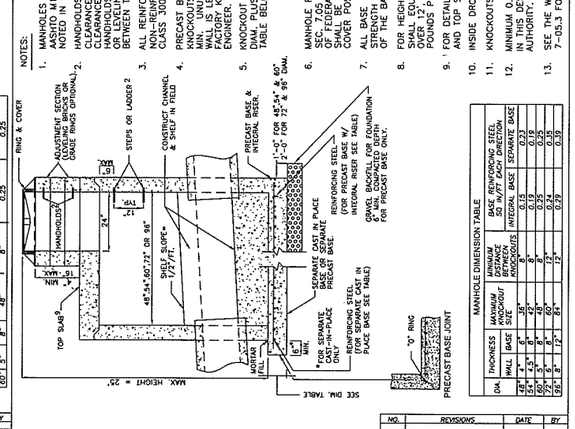

MANHOLE DIMENSION TABLE

DIA	THICKNESS WALL	THICKNESS BASE	MINIMUM KNOCKOUT SIZE	MINIMUM DISTANCE BETWEEN KNOCKOUTS	BASE REINFORCING STEEL 50 lb/ft² EACH DIRECTION INTEGRAL BASE	BASE REINFORCING STEEL 50 lb/ft² EACH DIRECTION SEPARATE BASE
48"	4"	6"	36"	8"	0.15	0.23
54"	4.5"	6"	42"	8"	0.17	0.25
60"	5"	6"	48"	8"	0.19	0.28
72"	6"	8"	60"	12"	0.25	0.35
96"	8"	12"	84"	12"	0.35	0.49

NO.	REVISIONS	DATE	BY

DWG: D1-3.DWG

Department of Public Works
CLARK COUNTY WASHINGTON
proud past, promising future

MANHOLE TYPE 3
48", 54", 60", 72", & 96"

APPROVED
Peter Capen
COUNTY ENGINEER
01/01/04
DATE

STANDARD D1.3
PLAN No.
DESIGNED SCH
DRAWN SCH
DATE 07/07/03

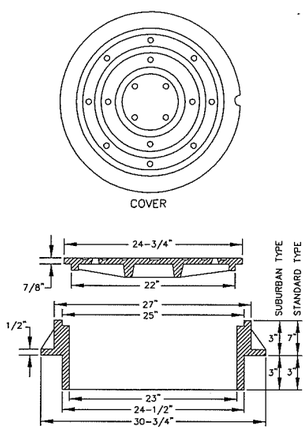

NOTES:

1. USE SUBURBAN TYPE ONLY IN NON-TRAFFIC AREAS, AND ONLY WITH APPROVAL BY COUNTY.
2. COVER MATERIAL TO BE DUCTILE IRON ASTM A536 GRADE 80-55-06
3. FRAME MATERIAL TO BE GRAY CAST IRON ASTM A-48 CLASS 30.
4. SEE WSDOT STANDARD SPECIFICATIONS SEC. 7.05
5. COVER AND FRAME TO BE MACHINED TO A TRUE BEARING ALL AROUND.
6. NOTCH LID FOR LIFTING HOOK.

NO.	REVISIONS	DATE	BY

DWG: D1-5.DWG

Department of Public Works
CLARK COUNTY WASHINGTON
proud past, promising future

STANDARD MANHOLE FRAME AND COVER

APPROVED
Peter Capen
COUNTY ENGINEER
01/01/04
DATE

STANDARD D1.6
PLAN No.
DESIGNED SCH
DRAWN SCH
DATE 09/04/02

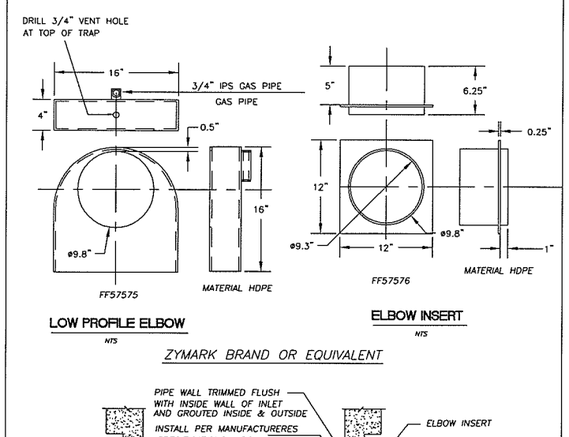

ZYMARK BRAND OR EQUIVALENT

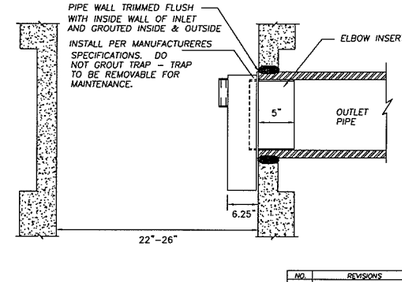

NO.	REVISIONS	DATE	BY

DWG: D2-1.DWG

Department of Public Works
CLARK COUNTY WASHINGTON
proud past, promising future

CATCH BASIN OUTLET PIPE TRAP

APPROVED
Peter Capen
COUNTY ENGINEER
01/01/04
DATE

STANDARD D2.1
PLAN No.
DESIGNED SCH
DRAWN SCH
DATE 09/23/02

NOTES:

1. MANHOLES SHALL BE CONSTRUCTED IN ACCORDANCE WITH AASHTO M199 UNLESS OTHERWISE SHOWN ON PLANS OR NOTED IN THE WSDOT/APWA STANDARD SPECIFICATIONS.
2. HANDHOLDS IN ADJUSTMENT SECTION SHALL HAVE 3" MIN. CLEARANCE. STEPS IN MANHOLE SHALL HAVE 3" MIN. CLEARANCE. SEE PLAN NO. D1.5, "MANHOLE DETAILS."
3. ALL REINFORCED CAST-IN-PLACE CONCRETE SHALL BE CLASS 4000. ALL PRECAST CONCRETE SHALL BE CLASS 4000. NON-REINFORCED CONCRETE IN CHANNEL AND SHELF SHALL BE CLASS 3000.
4. PRECAST BASES SHALL BE FURNISHED WITH CUTOUTS OR KNOCKOUTS. KNOCKOUTS SHALL HAVE A WALL THICKNESS OF 2" MIN. UNUSED KNOCKOUTS NEED NOT BE GROUTED IF WALL IS LEFT INTACT. PIPES SHALL BE INSTALLED ONLY IN FACTORY PROVIDED KNOCKOUTS UNLESS OTHERWISE APPROVED BY THE ENGINEER.
5. KNOCKOUT OR CUTOUT HOLE SIZE SHALL EQUAL PIPE OUTER DIAM. PLUS MANHOLE WALL THICKNESS.
6. MANHOLE RINGS AND COVERS SHALL BE IN ACCORDANCE WITH SEC. 7.05 AND MEET THE STRENGTH REQUIREMENTS SPECIFIED IN SECTION 9-05.12. MATING SURFACES SHALL BE FINISHED TO ASSURE NON-ROCKING FIT WITH ANY COVER POSITION.
7. ALL BASE REINFORCING STEEL SHALL HAVE A MIN. YIELD STRENGTH OF 60,000 PSI AND BE PLACED IN THE UPPER HALF OF THE BASE WITH 1" MIN. CLEARANCE.
8. FOR HEIGHTS OF 12' OR LESS, MIN. SOIL BEARING VALUE SHALL EQUAL 3,300 POUNDS PER SQUARE FOOT. FOR HEIGHTS OVER 12', MIN. SOIL BEARING VALUE SHALL EQUAL 3,800 POUNDS PER SQUARE FOOT.
9. FOR DETAILS SHOWING GRADE RING, LADDER, STEPS, HANDHOLDS, AND TOP SLABS, SEE PLAN NO. D1.5, "MANHOLE DETAILS."
10. INSIDE DROP MAXIMUM TO BE 4' VERTICAL DISTANCE I.E. TO I.E.
11. KNOCKOUTS TO BE USED WHEN STUB OUT PIPE IS 3' OR LESS.
12. MINIMUM 0.20' FALL BETWEEN INLET AND OUTLET. ANY REDUCTION IN THIS DESIGN REQUIREMENT MUST BE APPROVED BY REVIEWING AUTHORITY.
13. SEE THE WSDOT/APWA STANDARD SPECIFICATIONS SEC. 7-05.3 FOR JOINT REQUIREMENTS.

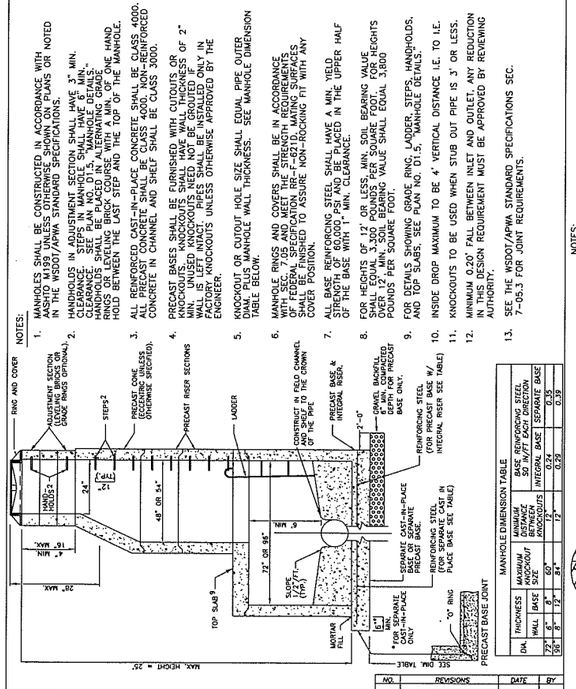

MANHOLE DIMENSION TABLE

DIA	THICKNESS WALL	THICKNESS BASE	MAXIMUM KNOCKOUT SIZE	MINIMUM DISTANCE BETWEEN KNOCKOUTS	BASE REINFORCING STEEL 50 lb/ft² EACH DIRECTION INTEGRAL BASE	BASE REINFORCING STEEL 50 lb/ft² EACH DIRECTION SEPARATE BASE
72"	6"	8"	60"	12"	0.25	0.39
96"	8"	12"	84"	12"	0.39	0.59

NO.	REVISIONS	DATE	BY

DWG: D1-2.DWG

Department of Public Works
CLARK COUNTY WASHINGTON
proud past, promising future

MANHOLE TYPE 2
72" & 96"

APPROVED
Peter Capen
COUNTY ENGINEER
01/01/04
DATE

STANDARD D1.2
PLAN No.
DESIGNED SCH
DRAWN SCH
DATE 07/07/03

NOTES:

1. PROPRIETARY MANHOLE HANDHOLDS AND STEPS MAY BE USED PROVIDED THEY ARE DESIGNED TO CONFORM TO SEC. R, ASTM C478, AASHTO M199 AND MEET ALL WISHA REQUIREMENTS.
2. MANHOLE STEP/HANDHOLD LEGS SHALL BE OPTIONAL OR APPROXIMATELY RADIAL AT THE PERIMETER OF MANHOLE PROVIDED THAT ALL STEPS IN ANY MANHOLE SHALL BE SIMILAR. PENETRATION OF OUTER WALL BY A LEG IS PROHIBITED.
3. HANDHOLDS AND STOPS SHALL HAVE "DROP" RUNGS OR PROTUBERANCES TO PREVENT SIDEWAYS SLIP.
4. LADDERS OR STEPS SHALL EXTEND TO WITHIN 16" OF BOTTOM OF MANHOLE.
5. HANGING LADDERS SHALL BE PERMANENTLY FASTENED AT TOP BY HANGING ON STEP RUNGS OR BY OTHER MEANS. LADDERS OR STEPS EACH SHALL BE EMBEDDED AT BOTTOM IN BASE.
6. ADDITIONAL SAFETY FEATURES MAY BE REQUIRED IN VERY DEEP OR UNUSUAL STRUCTURES.

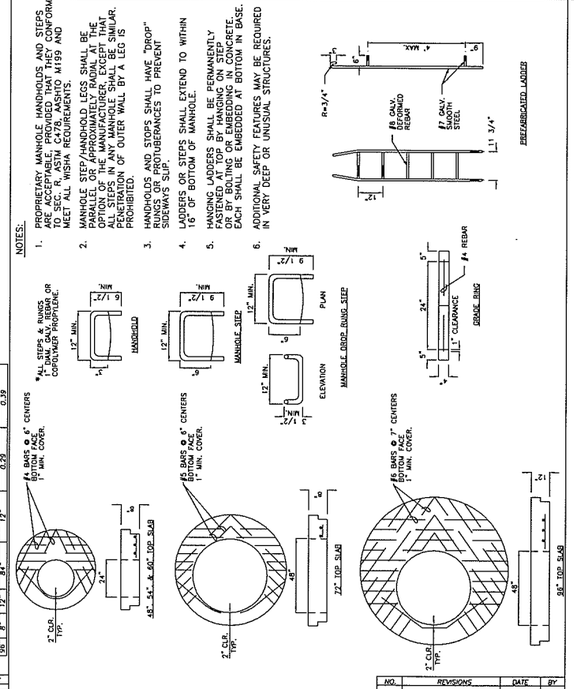

NO.	REVISIONS	DATE	BY

DWG: D1-5.DWG

Department of Public Works
CLARK COUNTY WASHINGTON
proud past, promising future

MANHOLE DETAILS

APPROVED
Peter Capen
COUNTY ENGINEER
01/01/04
DATE

STANDARD D1.5
PLAN No.
DESIGNED SCH
DRAWN SCH
DATE 08/05/02

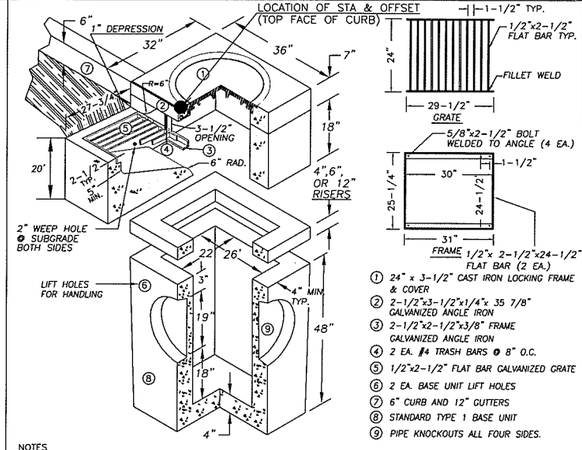

1. 24" x 3-1/2" CAST IRON LOCKING FRAME & COVER
2. 2-1/2"x3-1/2"x1/4"x 35 7/8" GALVANIZED ANGLE IRON
3. 2-1/2"x2-1/2"x3/8" FRAME GALVANIZED ANGLE IRON
4. 2 EA. #4 TRASH BARS @ 8" O.C.
5. 1/2"x2-1/2" FLAT BAR GALVANIZED GRATE
6. 2 EA. BASE UNIT LIFT HOLES
7. 6" CURB AND 12" GUTTERS
8. STANDARD TYPE 1 BASE UNIT
9. PIPE KNOCKOUTS ALL FOUR SIDES.

NOTES

1. COMBINATION CURB INLET TO BE CONSTRUCTED IN ACCORDANCE WITH ASTM C478 & C890 UNLESS SHOWN ON PLANS OR NOTED IN STANDARD SPECIFICATIONS.
2. REINFORCING FOR INLET UNIT, 3 EA. #4 HORZONTAL BARS; REINFORCING FOR TOP UNIT, 2 EA. #3 HORZONTAL BARS; REINFORCING FOR INLET SLOPED BASE, 4x4 MESH.
3. ALL REBAR TO MEET ASTM A615 GRADE 60.
4. AS AN ACCEPTABLE ALTERNATIVE TO REBAR, WELDED WIRE FABRIC HAVING A MIN. AREA OF 0.12 SQAURE INCHES PER FOOT MAY BE USED. WELDED WIRE FABRIC SHALL COMPLY TO ASTM A497. WIRE FABRIC SHALL NOT BE PLACED IN KNOCKOUTS.
5. ALL REINFORCED CAST-IN-PLACE CONCRETE SHALL BE CLASS 4,000.
6 PRECAST BASES SHALL BE FURNISHED WITH CUTOUTS OR KNOCKOUTS. KNOCKOUTS SHALL HAVE A WALL THICKNESS OF 2" MIN. ALL PIPE SHALL BE INSTALLED IN FACTORY PROVIDED KNOCKOUTS. UNUSED KNOCKOUTS NEED NOT BE GROUTED IF WALL IS LEFT INTACT.
7. KNOCKOUTS OR CUTOUT HOLE SIZE IS EQUAL TO PIPE OUTER DIAM. PLUS INLET WALL THICKNESS.
8. ROUND KNOCKOUTS MAY BE ON ALL 4 SIDES WITH MAX. DIAM. OF 17".
9. THE MAX. DEPTH FROM THE FINISHED GRADE TO THE PIPE INVERT IS 5'-0".
10. ANY PROTUDING ENDS OF PIPES SHALL BE TRIMMED FLUSH WITH THE INSIDE WALLS AND GROUTED TO THE SATISFACTION OF ENGINEER.
11. GRATE TO HAVE 1" DEPRESSION AT GUTTER INLET WITH GUTTER TO BE TAPERED DOWN TO INLET.
12. INSTALL REMOVABLE APWA TYPE 60A TRAP OR EQUAL, SEE STD. PLAN D2.1.
13. CONTRACTOR SHALL HAVE THE OPTION OF FURNISHING PRECAST OR CAST-IN-PLACE INLET STRUCTURES. UNLESS SPECIFIED.
14. SEE STD. PLAN 4.1 FOR BASIN GUTTER PAN DETAIL.

NO.	REVISIONS	DATE	BY

DWG: D3-0.DWG

Department of Public Works
CLARK COUNTY WASHINGTON
proud past, promising future

STANDARD TYPE 1 COMBINATION CURB INLET

APPROVED
Peter Capen
COUNTY ENGINEER
01/01/04
DATE

STANDARD D3.0
PLAN No.
DESIGNED SCH
DRAWN SCH
DATE 09/09/02

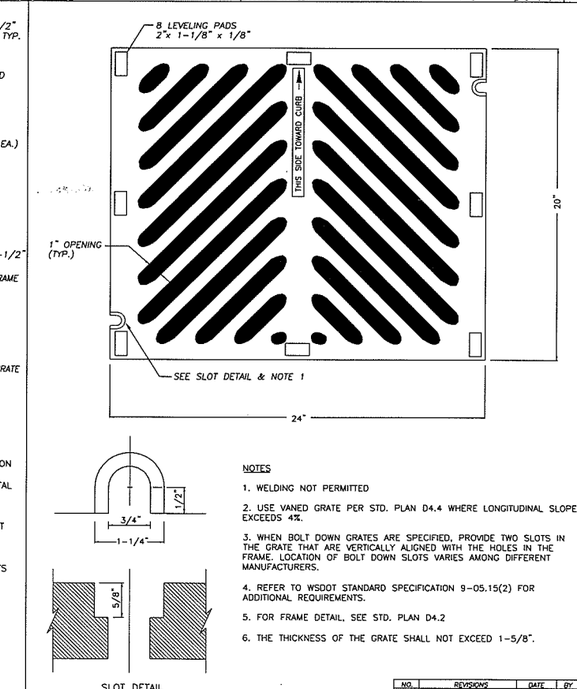

NOTES

1. WELDING NOT PERMITTED
2. USE VANED GRATE PER STD. PLAN D4.4 WHERE LONGITUDINAL SLOPE EXCEEDS 4%.
3. WHEN BOLT DOWN GRATES ARE SPECIFIED, PROVIDE TWO SLOTS IN THE GRATE THAT ARE VERTICALLY ALIGNED WITH THE HOLES IN THE FRAME. LOCATION OF BOLT DOWN SLOTS VARIES AMONG DIFFERENT MANUFACTURERS.
4. REFER TO WSDOT STANDARD SPECIFICATION 9-05.15(2) FOR ADDITIONAL REQUIREMENTS.
5. FOR FRAME DETAIL, SEE STD. PLAN D4.2
6. THE THICKNESS OF THE GRATE SHALL NOT EXCEED 1-5/8".

NO.	REVISIONS	DATE	BY

DWG: D4-1.dwg

Department of Public Works
CLARK COUNTY WASHINGTON
proud past, promising future

HERRINGBONE GRATE FOR CATCH BASIN

APPROVED
Peter Capen
COUNTY ENGINEER
01/01/04
DATE

STANDARD D4.3
PLAN No.
DESIGNED SCH
DRAWN SCH
DATE 07/07/03

DESIGNED	BK/JM
DRAWN	KB/RK
CRP	340622
HOR.	SEE SHEET
VERT.	SEE SHEET
DATE	10/31/05
DWG:	DD1
SHEET	X OF X

CALL 48 HOURS BEFORE YOU DIG
1-800-553-4344
"It's the Law"
NORTHWEST UTILITY NOTIFICATION CENTER

STATE OF WASHINGTON
BRUCE M. MINE
31145
REGISTERED PROFESSIONAL ENGINEER
EXPIRES: JULY 7, 2007

ENGINEERING PROGRAM
DESIGN SECTION
NE 119TH STREET WEST
DRAINAGE DETAILS

proud past, promising future
CLARK COUNTY WASHINGTON

N:\CIP\PROJECTS\340622-NE119thSt\West-SalmonCrAve-NE72ndAve\DESIGN\DWGS\DD1-2.dwg, Layout1, 10/25/2005 5:05:31 PM, beglejyk

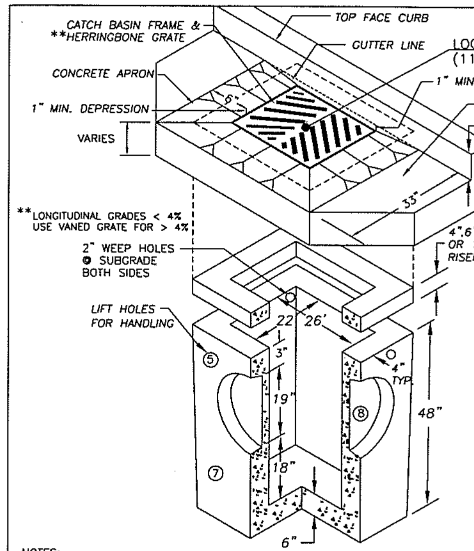

PIPE ALLOWANCES

PIPE MATERIAL	MAXIMUM INSIDE DIAMETER
REINFORCED OR PLAIN CONCRETE	18"
ALL METAL PIPE	21"
CPSSP * (Std. Spec. 9-05.20	18"
SOLID WALL PVC (Std. Spec. 9-05.12(1)	21"
PROFILE WALL PVC (Std. Spec. 9-05.12(2)	21"

* CORRUGATED POLYETHYLENE STORM SEWER PIPE

NOTES:

1. CURB INLET TO BE CONSTRUCTED IN ACCORDANCE WITH ASTM C478 (AASHTO) M 199) & C890 UNLESS SHOWN ON PLANS OR NOTED IN STANDARD SPECIFICATIONS.
2. REINFORCING FOR INLET UNIT, 3 EA. #4 HORIZONTAL BARS.
3. REINFORCING FOR TOP UNIT, 2 EA. #3 HORIZONTAL BARS.
4. ALL REBAR TO MEET ASTM A615 GRADE 60.
5. AS AN ACCEPTABLE ALTERNATIVE TO REBAR, WELDED WIRE FABRIC HAVING A MIN. AREA OF 0.12 SQUARE INCHES PER FOOT MAY BE USED. WELDED WIRE FABRIC SHALL COMPLY TO ASTM A497. WIRE FABRIC SHALL NOT BE PLACED IN KNOCKOUTS.
6. ALL REINFORCED CAST-IN-PLACE CONCRETE SHALL BE CLASS 4,000.
7. PRECAST BASES SHALL BE FURNISHED WITH CUTOUTS OR KNOCKOUTS. KNOCKOUTS SHALL HAVE A WALL THICKNESS OF 2" MIN. ALL PIPE SHALL BE INSTALLED IN FACTORY PROVIDED KNOCKOUTS. UNUSED KNOCKOUTS NEED NOT BE GROUTED IF WALL IS LEFT INTACT.
8. KNOCKOUTS OR CUTOUT HOLE SIZE IS EQUAL TO PIPE OUTER DIAM. PLUS INLET WALL THICKNESS.
9. ROUND KNOCKOUTS MAY BE ON ALL 4 SIDES WITH MAX. DIAM. OF 20".
10. THE MAX. DEPTH FROM THE FINISHED GRADE TO THE PIPE INVERT IS 5'-0".
11. ANY PROTRUDING ENDS OF PIPES SHALL BE TRIMMED FLUSH WITH THE INSIDE WALLS AND GROUTED TO THE SATISFACTION OF ENGINEER.
12. CATCH BASIN FRAME AND GRATE SHALL BE IN ACCORDANCE WITH WDOT STANDARD SPECIFICATIONS AND MEET THE STRENGTH REQUIREMENTS OF FEDERAL SPECIFICATION RR-F-621D. MATING SURFACES SHALL BE FINISHED TO ASSURE NON-ROCKING FIT WITH ANY COVER POSITION.
13. FRAME MAY BE INSTALLED WITH FLANGE DOWN OR CAST INTO RISER.
14 INSTALL REMOVABLE APWA TYPE 60A TRAP OR EQUAL, SEE STD. PLAN D2.1.
15. CONTRACTOR SHALL HAVE THE OPTION OF FURNISHING PRECAST OR CAST-IN-PLACE INLET STRUCTURES, UNLESS SPECIFIED.

NO.	REVISIONS	DATE	BY

DWG: D4-0.DWG

Department of Public Works
CLARK COUNTY WASHINGTON
proud past, promising future

STANDARD CATCH BASIN TYPE 1 — APPROVED — COUNTY ENGINEER — 01/01/04 DATE — STANDARD D4.0 PLAN No.

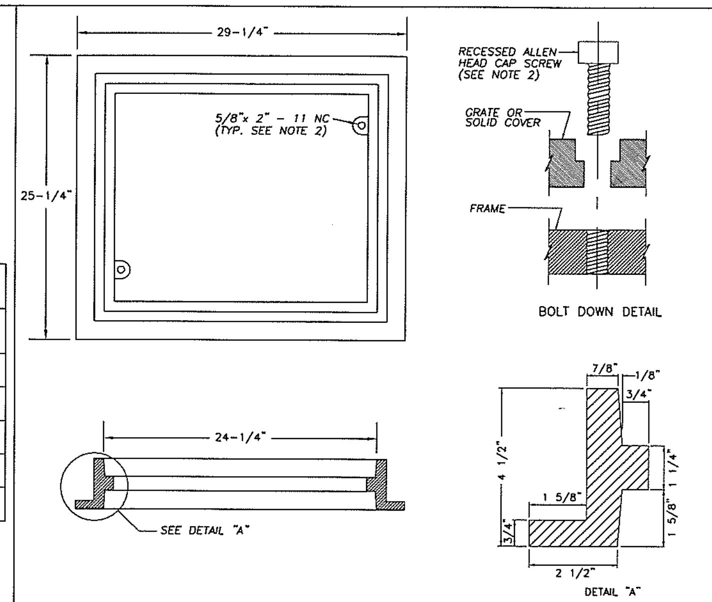

NOTES

1. THIS FRAME IS DESIGNED TO ACCOMODATE 20"x 24" GRATES OR COVERS AS SHOWN ON STD. PLANS D4.3 AND D4.4.
2. WHEN BOLT DOWN GRATES OR COVERS ARE SPECIFIED, PROVIDE TWO HOLES IN THE FRAME THAT ARE VERTICALLY ALIGNED WITH THE GRATE OR COVER SLOTS. TAP EACH HOLE TO ACCEPT A 5/8"x 2" - 11 NC ALLEN HEAD CAP SCREW. LOCATION OF BOLT DOWN HOLES VARIES AMONG DIFFERENT MANUFACTURERS.
3. REFER TO WSDOT STANDARD SPECIFICATION 9-05.15(2) FOR ADDITIONAL REQUIREMENTS.
4. SEE WSDOT STD. SPEC. SECTION 7.05.

NO.	REVISIONS	DATE	BY

DWG: D4-2.dwg

Department of Public Works
CLARK COUNTY WASHINGTON
proud past, promising future

REVERSIBLE FRAME FOR CATCH BASIN — APPROVED — COUNTY ENGINEER — 01/01/04 DATE — STANDARD D4.2 PLAN No.

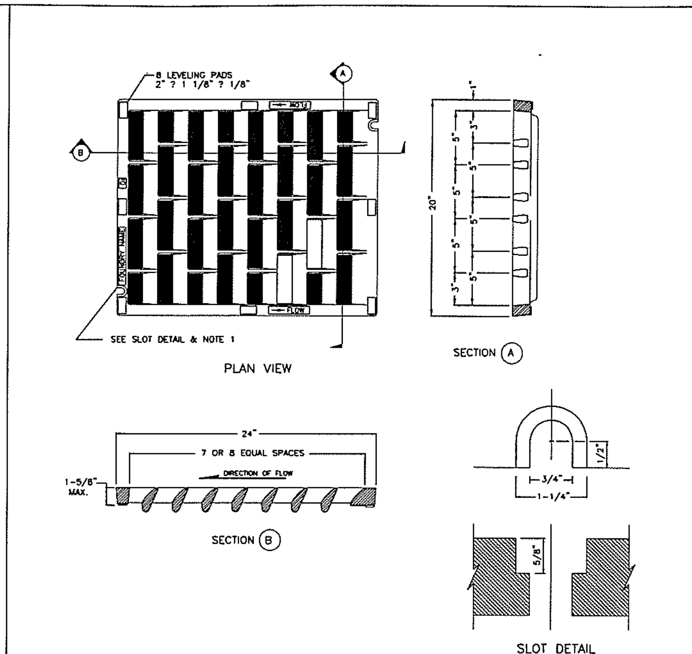

NOTES

1. WELDING NOT PERMITTED
2. USE HERRINGBONE GRATE PER STD. PLAN D4.3 WHERE LONGITUDINAL SLOPE IS LESS THAN 4%.
3. WHEN BOLT DOWN GRATES ARE SPECIFIED, PROVIDE TWO SLOTS IN THE GRATE THAT ARE VERTICALLY ALIGNED WITH THE HOLES IN THE FRAME. LOCATION OF BOLT DOWN SLOTS VARIES AMONG DIFFERENT MANUFACTURERS.
4. REFER TO WSDOT STANDARD SPECIFICATION 9-05.15(2) FOR ADDITIONAL REQUIREMENTS.
5. FOR FRAME DETAIL, SEE STD. PLAN D4.2

NO.	REVISIONS	DATE	BY

DWG: D4-4.dwg

Department of Public Works
CLARK COUNTY WASHINGTON
proud past, promising future

VANE GRATE FOR CATCH BASIN — APPROVED — COUNTY ENGINEER — 01/01/04 DATE — STANDARD D4.4 PLAN No.

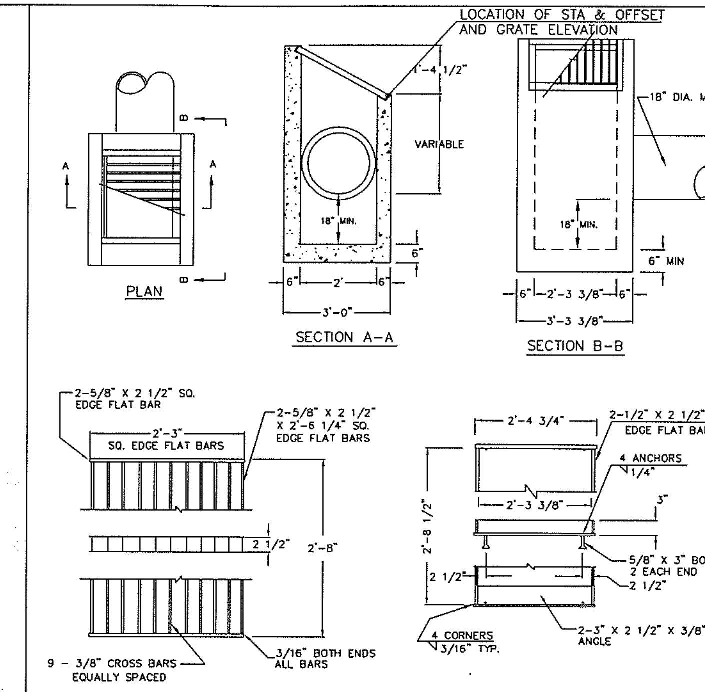

NOTES:

1. DITCH INLET CONSTRUCTION IN ACCORDANCE WITH ASTM C-478
2. CATCH BASIN, FRAME, AND GRATES SHALL BE FLAT BAR STEEL OR APPROVED EQUAL.
3. INSIDE FRAME DIMENSIONS: 2'-3 3/8"x 2'-8 1/2"".
4. 3/8" CROSS BARS SHALL BE FLUSH WITH THE GRATE SURFACE AND MAY BE FILLET WELDED, RESISTANCE WELDED OR ELECTROFORGED TO BEARING BARS.

NO.	REVISIONS	DATE	BY

DWG: D6.DWG

Department of Public Works
CLARK COUNTY WASHINGTON
proud past, promising future

DITCH INLET — APPROVED — COUNTY ENGINEER — 01/01/04 DATE — STANDARD D6 PLAN No.

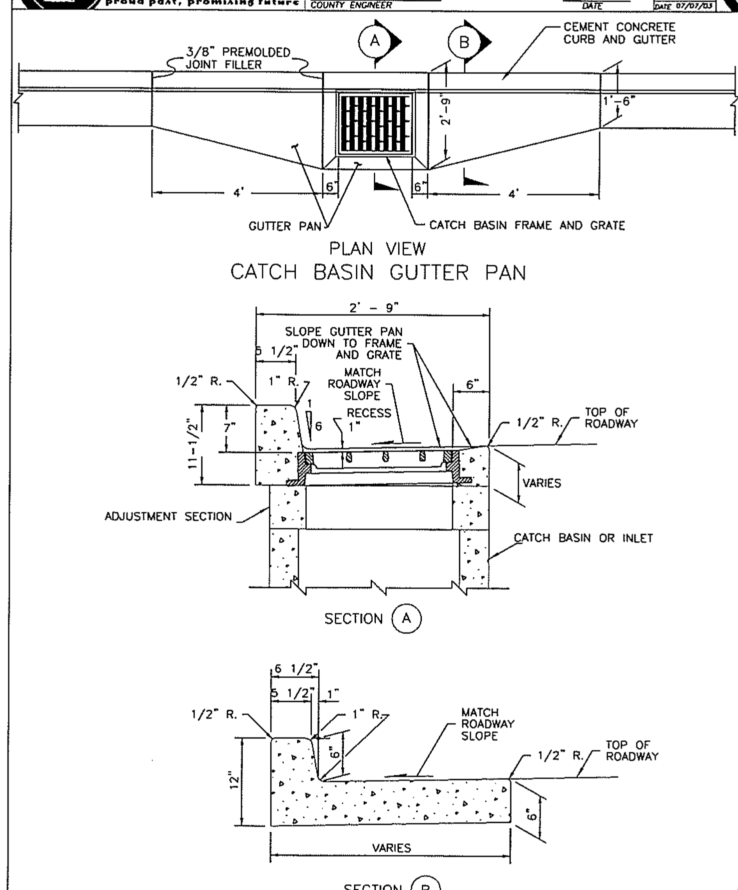

NO.	REVISIONS	DATE	BY

DWG: D4-1.DWG

Department of Public Works
CLARK COUNTY WASHINGTON
proud past, promising future

CATCH BASIN GUTTER PAN — APPROVED — COUNTY ENGINEER — 01/01/04 DATE — STANDARD D4.1 PLAN No.

LOCATION OF STA & OFFSET (TOP FACE OF CURB)

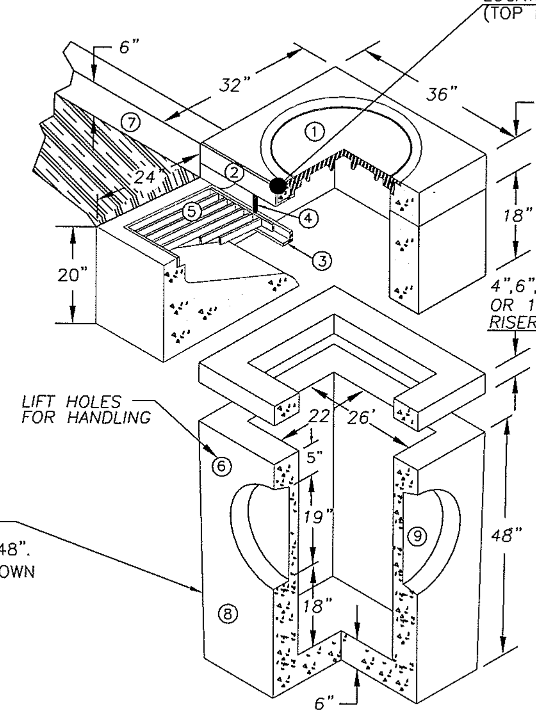

TYPE 1 BASE SHOWN (FOR TYPE 2 BASE, SEE STD. PLAN B-1e; DIA. = 48". ALIGN INLET FRAME AS SHOWN ON PLAN VIEW, THIS SHT.)

#	
1	24"ALUMINUM LOCKING FRAME & COVER
2	2 1/2"x3 1/2"x1/4"x 35 7/8" GALVANIZED ANGLE IRON
3	2"x2 1/2"x1/4"x33" GALVANIZED ANGLE IRON
4	2 EA. #4 TRASH BARS @12" O.C.
5	24 3/4"x 28 1/2" GALVANIZED GRATE
6	2 EA. BASE UNIT LIFT HOLES
7	6" CURB AND 18" GUTTERS
8	STANDARD TYPE 1 BASE UNIT
9	PIPE KNOCKOUTS ALL FOUR SIDES.

WEIGHT:

TOP WEIGHT 420 LB.

RISER WITH GRATE WEIGHT 1920 LB.

BASE WEIGHT 2200 LB.

NOTES:

1. REINFORCING FOR INLET UNIT 3 EA. #4 HORIZONTAL BARS.
2. REINFORCING FOR TOP UNIT 2 EA. #3 HORIZONTAL BARS
3. REINFORCING FOR INLET SLOPED BASE, 4x4 MESH
4. GUTTER IS TAPERED DOWN TO GRATE INLET
5. ALL CONCRETE IS 4,000 PSI MIN.
6. ALL REBAR MEETS ASTM A615 GRADE 60.

ISOMETRIC VIEW

LOCATION OF STA & OFFSET (TOP FACE OF CURB)

ALIGN COVER OPENING WITH WITH MANHOLE OPENING

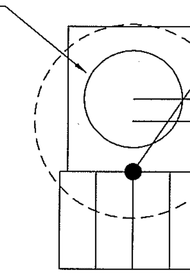

OFFSET MANHOLE BASE TOWARDS STREET

PLAN VIEW AND PLACEMENT DETAIL

TYPE 2 COMBINATION CURB INLET

NTS

ENGINEERING PROGRAM
DESIGN SECTION

NE 119TH STREET WEST
DRAINAGE DETAILS

DESIGNED	BK/JM
DRAWN	KB/RK
CRP	340622
HOR.	SEE SHEET
VERT.	SEE SHEET
DATE	10/31/05
DWG:	DD2
SHEET	X OF X

CALL 48 HOURS BEFORE YOU DIG 1-800-553-4344 "It's the Law" NORTHWEST UTILITIES NOTIFICATION CENTER

CLARK COUNTY WASHINGTON
proud past, promising future

N:\CIP\PROJECTS\340622-NE119thStWest-SalmonCrAve-NE72ndAve\DESIGN\DWGS\DD1-2.dwg, Layout1 (2), 10/25/2005 5:05:51 PM, bagleyk

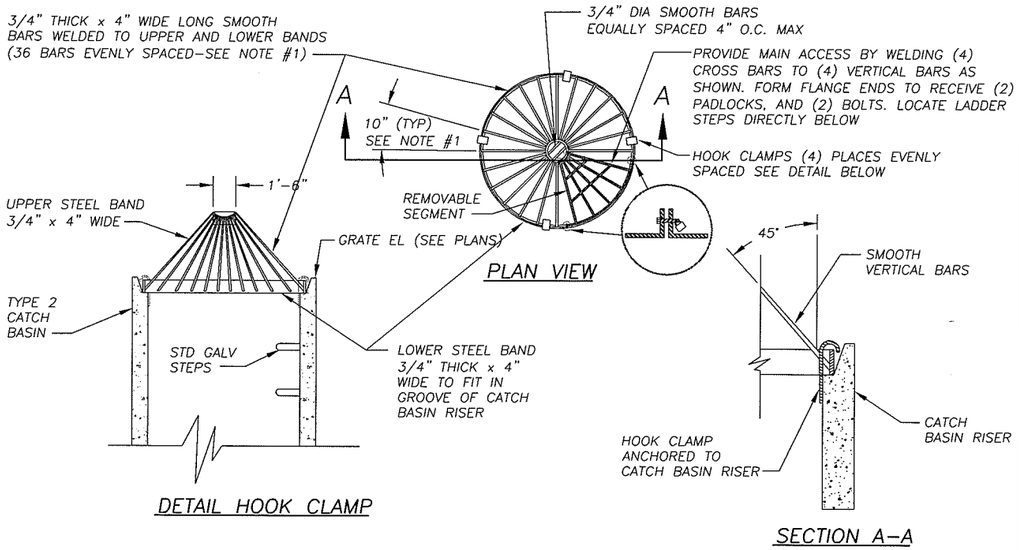

DROP INLET TRASH RACK

NTS

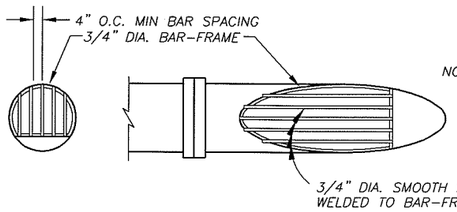

NOTE:
1. CMP* END–SECTION SHOWN;
2. ALL STEEL PARTS MUST BE GALVANIZED AND ASPHALT COATED (TREATMENT 1 OR BETTER).

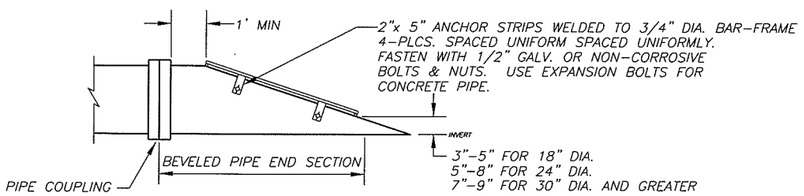

DEBRIS RACK

NTS

NOTE: FOR 12" DIP TRAP USE 12" * 90 DEG. DIP ELBOW

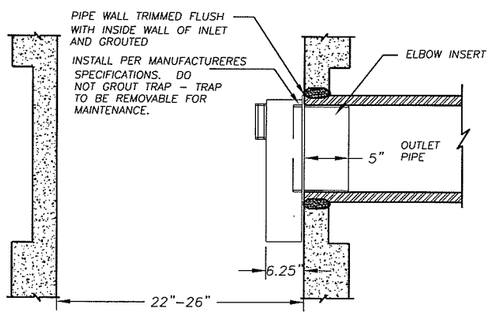

CATCH BASIN OUTLET PIPE TRAP

NTS

PRELIMINARY

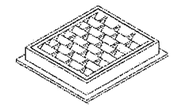

FRAME AND VANED GRATE

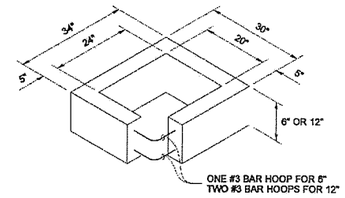

RECTANGULAR ADJUSTMENT SECTION

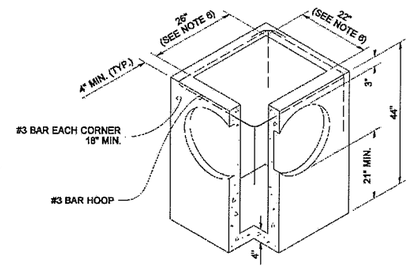

PRECAST BASE SECTION

NOTES

1. AS AN ACCEPTABLE ALTERNATE TO REBAR, WIRE MESH HAVING A MINIMUM AREA OF 0.12 SQUARE INCHES PER FOOT MAY BE USED. WIRE MESH SHALL NOT BE PLACED IN KNOCKOUTS.
2. THE KNOCKOUT DIAMETER SHALL NOT BE GREATER THAN 20". KNOCKOUTS SHALL HAVE A WALL THICKNESS OF 2" MINIMUM TO 2.5" MAXIMUM. PROVIDE A 1.5" MINIMUM GAP BETWEEN THE KNOCKOUT WALL AND THE OUTSIDE OF THE PIPE. AFTER THE PIPE IS INSTALLED, FILL THE GAP WITH JOINT MORTAR IN ACCORDANCE WITH STANDARD SPECIFICATION 9-04.3.
3. THE MAXIMUM DEPTH FROM THE FINISHED GRADE TO THE PIPE INVERT SHALL BE 5'.
4. FRAME AND GRATE MAY BE INSTALLED WITH FLANGE DOWN OR CAST INTO ADJUSTMENT SECTION.
5. THE PRECAST BASE SECTION MAY HAVE A ROUNDED FLOOR AND THE WALLS MAY BE SLOPED AT A RATE OF 1:24 OR STEEPER.
6. OPENING SHALL BE MEASURED AT THE TOP OF THE PRECAST BASE SECTION.

PIPE ALLOWANCES

PIPE MATERIAL	MAXIMUM INSIDE DIAMETER
REINFORCED OR PLAIN CONCRETE	12"
ALL METAL PIPE	15"
CPSSP * (STD. SPEC. 9-05.20)	12"
SOLID WALL PVC (STD. SPEC. 9-05.12(1))	15"
PROFILE WALL PVC (STD. SPEC. 9-05.12(2))	15"

* CORRUGATED POLYETHYLENE STORM SEWER PIPE

MATTHEW J. WITHROW, STATE OF WASHINGTON, 13598, REGISTERED PROFESSIONAL ENGINEER
EXPIRES JULY 1, 2007

CATCH BASIN TYPE 1

STANDARD PLAN B-1

SHEET 1 OF 1 SHEET
APPROVED FOR PUBLICATION
Harold J. Peterfeso 07-21-03
STATE DESIGN ENGINEER DATE
Washington State Department of Transportation

NOTE: THIS PLAN IS NOT A LEGAL ENGINEERING DOCUMENT BUT AN ELECTRONIC DUPLICATE OF THE ORIGINAL SIGNED BY THE ENGINEER AND APPROVED FOR PUBLICATION. IS KEPT ON FILE AT THE WASHINGTON STATE DEPARTMENT OF TRANSPORTATION. A COPY MAY BE OBTAINED UPON REQUEST.

DRAWN BY: MARK SUIKA

NOTE: THIS PLAN IS NOT A LEGAL ENGINEERING DOCUMENT BUT AN ELECTRONIC DUPLICATE OF THE ORIGINAL SIGNED BY THE ENGINEER AND APPROVED FOR PUBLICATION. IS KEPT ON FILE AT THE WASHINGTON STATE DEPARTMENT OF TRANSPORTATION. A COPY MAY BE OBTAINED UPON REQUEST

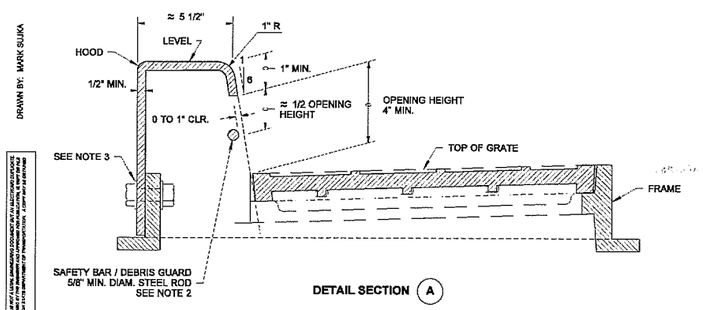

DETAIL SECTION (A)

NOTES

1. THE ASYMMETRY OF THE COMBINATION INLET SHALL BE CONSIDERED WHEN CALCULATING THE OFFSET DISTANCE FOR THE CATCH BASIN. SEE SECTION "A".
2. THE DIMENSIONS OF THE FRAME AND HOOD MAY VARY SLIGHTLY AMONG DIFFERENT MANUFACTURERS. THE FRAME MAY HAVE CAST FEATURES INTENDED TO SUPPORT A GRATE GUARD. HOOD UNITS SHALL MOUNT OUTSIDE OF THE FRAME. THE METHODS FOR FASTENING THE SAFETY BAR / DEBRIS GUARD ROD TO THE HOOD MAY VARY. THE HOOD MAY INCLUDE CASTING LUGS. THE TOP OF THE HOOD MAY BE CAST WITH A PATTERN.
3. ATTACH THE HOOD TO THE FRAME WITH TWO 3/4" × 2" HEX HEAD BOLTS, NUTS, AND OVERSIZE WASHERS. THE WASHERS SHALL BE USED ON THE SLOTTED SIDE, AND SHALL HAVE DIAMETERS ADEQUATE TO ASSURE FULL BEARING ACROSS THE SLOTS.
4. WHEN BOLT DOWN GRATES ARE SPECIFIED IN THE CONTRACT, PROVIDE TWO HOLES IN THE FRAME THAT ARE VERTICALLY ALIGNED WITH THE GRATE SLOTS. TAP EACH HOLE TO ACCEPT A 5/8" × - 11 NC × 2" ALLEN HEAD CAP SCREW. LOCATION OF BOLT DOWN HOLES VARIES AMONG DIFFERENT MANUFACTURERS. SEE "BOLT DOWN DETAIL", STANDARD PLAN B-2a.
5. ONLY DUCTILE IRON VANED GRATES SHALL BE USED. SEE STANDARD PLANS B-2b AND B-2c FOR GRATE DETAILS. REFER TO STANDARD SPECIFICATION 9-05.15(2) FOR ADDITIONAL REQUIREMENTS.
6. THIS PLAN IS INTENDED TO SHOW THE INSTALLATION DETAILS OF A MANUFACTURED PRODUCT. IT IS NOT THE INTENT OF THIS PLAN TO SHOW THE SPECIFIC DETAILS NECESSARY TO FABRICATE THE CASTINGS SHOWN ON THIS DRAWING.

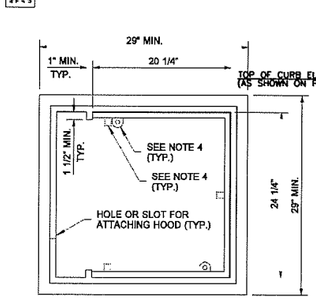

TOP VIEW
FRAME DETAIL

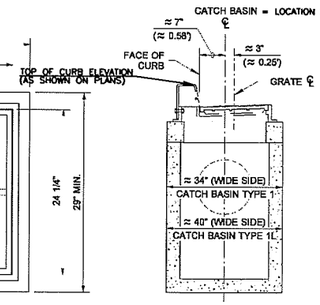

SEE NOTE 1
SECTION (A)

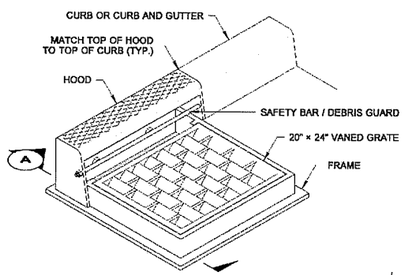

ISOMETRIC VIEW
COMBINATION INLET
FRAME, HOOD, AND VANED GRATE

MATTHEW J. WITHROW, STATE OF WASHINGTON, 13598, REGISTERED PROFESSIONAL ENGINEER
EXPIRES JULY 1, 2005

COMBINATION INLET

STANDARD PLAN B-2a

SHEET 1 OF 1 SHEET
APPROVED FOR PUBLICATION
Harold J. Peterfeso 02-25-04
STATE DESIGN ENGINEER DATE
Washington State Department of Transportation

DESIGNED	BK/JM
DRAWN	KB/RK
CRP	340622
HOR.	SEE SHEET
VERT.	SEE SHEET
DATE	10/31/05
DWG:	DD3
SHEET	X OF X

CALL 48 HOURS BEFORE YOU DIG 1-800-553-4344 "It's the Law" NORTHWEST UTILITIES NOTIFICATION CENTER

STATE OF WASHINGTON, MATTHEW J. WITHROW, 13598, REGISTERED PROFESSIONAL ENGINEER
EXPIRES JULY 7, 2007

ENGINEERING PROGRAM
DESIGN SECTION

NE 119TH STREET WEST
DRAINAGE DETAILS

proud past, promising future
CLARK COUNTY WASHINGTON

N:\CIP\PROJECTS\340622-NE119thStWest-SalmonCrAve-NE72ndAve\DESIGN\DWG\DD3.dwg, Layout1, 10/25/2005 5:06:05 PM, begleyk

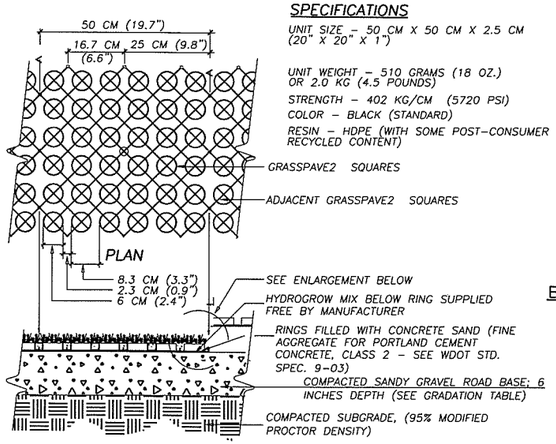

SPECIFICATIONS

UNIT SIZE - 50 CM X 50 CM X 2.5 CM (20" X 20" X 1")

UNIT WEIGHT - 510 GRAMS (18 OZ.) OR 2.0 KG (4.5 POUNDS)

STRENGTH - 402 KG/CM (5720 PSI)

COLOR - BLACK (STANDARD)

RESIN - HDPE (WITH SOME POST-CONSUMER RECYCLED CONTENT)

BASE COURSE GRADATION

SEIVE SIZE	% PASSING
3/4"	72"
3/8"	24"
#4 SCREEN	24"
#40 SCREEN	256.07
#200 SCREEN	258.07

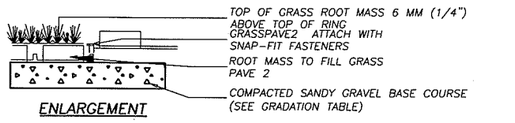

NOTES

1. POROUS PAVERS SHALL BE "GRASSPAVE 2" OR APPROVED EQUAL ("GRASSPAVE" SHOWN)
2. INSTALL PER MANUFACTURERS INSTRUCTIONS AND AS DIRECTED BY ENGINEER.
3. GRASS MIX AS FOR STORMWATER FACILITY
4. PROVISION & INSTALLATION OF ALL MATERIALS INCLUDING BASE COURSE INCLUDED IN COST FOR POROUS PAVER BID ITMES.

POROUS PAVER DETAIL

NOT TO SCALE

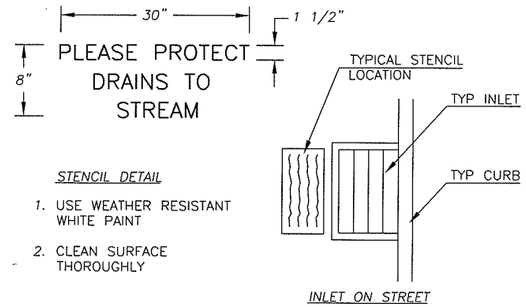

STENCIL DETAIL

1. USE WEATHER RESISTANT WHITE PAINT
2. CLEAN SURFACE THOROUGHLY

INLET STENCIL DETAIL

NTS

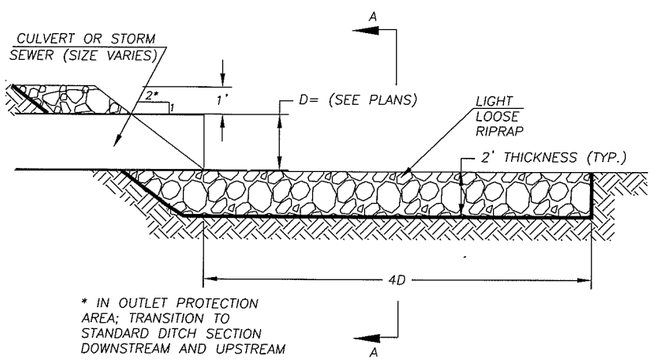

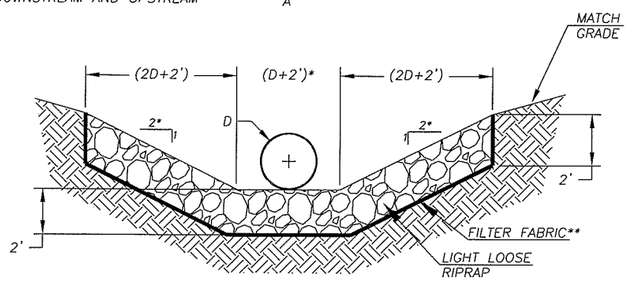

SECTION A-A

** CONSTRUCTION GEOTEXTILE FOR SEPARATION OR SOIL STABILIZATION (WSDOT 9-33, TABLE 3)

OUTFALL DISCHARGE PROTECTION

N.T.S.

PRELIMINARY

DESIGNED BK/JM
DRAWN KB/RK
CRP 340622
HOR. SEE SHEET
VERT. SEE SHEET
DATE 10/31/05
DWG: D04
SHEET X OF X

CALL 48 HOURS BEFORE YOU DIG 1-800-553-4344 "It's the Law" NORTHWEST UTILITIES NOTIFICATION CENTER

STATE OF WASHINGTON 31148 REGISTERED PROFESSIONAL ENGINEER
EXPIRES JULY 7, 2007

ENGINEERING PROGRAM
DESIGN SECTION

NE 119TH STREET WEST
DRAINAGE DETAILS

proud past, promising future
CLARK COUNTY WASHINGTON

N:\CIP\PROJECTS\340622-NE119thStWest-SalmonCrAve-NE72ndAve\DESIGN\DWGS\DD4.dwg, Layout1, 10/25/2005 5:06:15 PM, begleyk

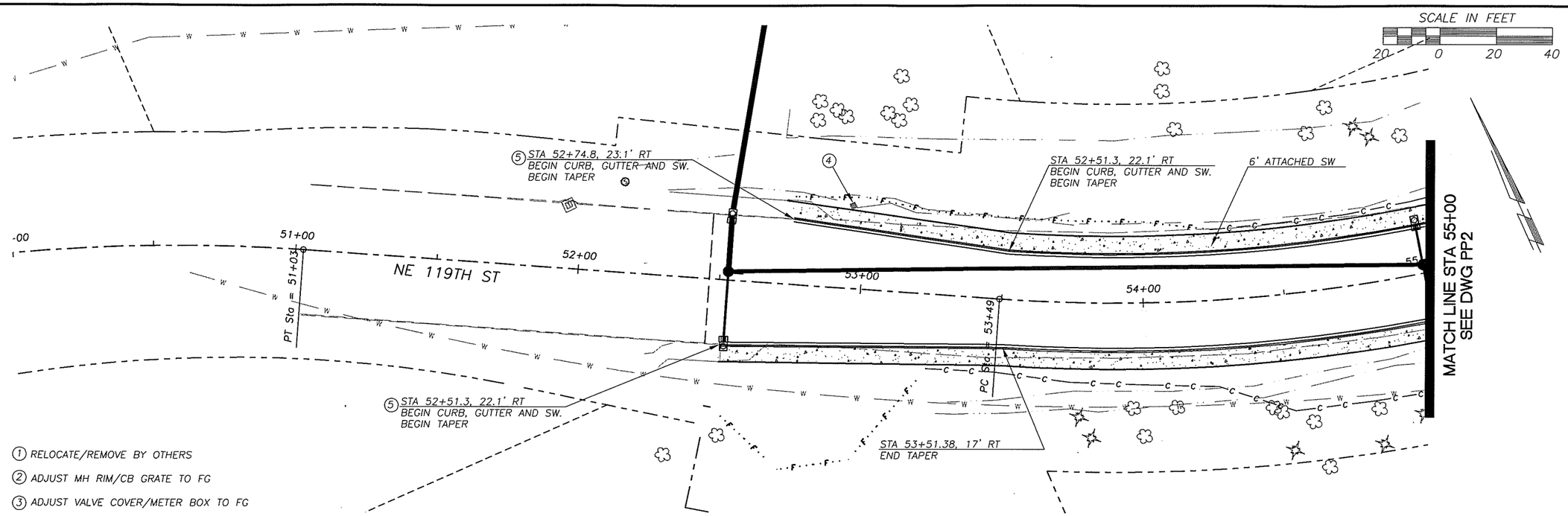

① RELOCATE/REMOVE BY OTHERS

② ADJUST MH RIM/CB GRATE TO FG

③ ADJUST VALVE COVER/METER BOX TO FG

④ REMOVE EXT CULVERT/DRAINAGE STRUCTURE

⑤ SAWCUT AND/OR MATCH EXT CURB AND/OR S/W.

⑥ RELOCATE EXIST MAILBOX TO STA LISTED. (TYPE 1, UNLESS OTHERWISE NOTED)

UNADJUSTED EARTHWORK QUANTITIES

EXCAVATION
EMBANKMENT

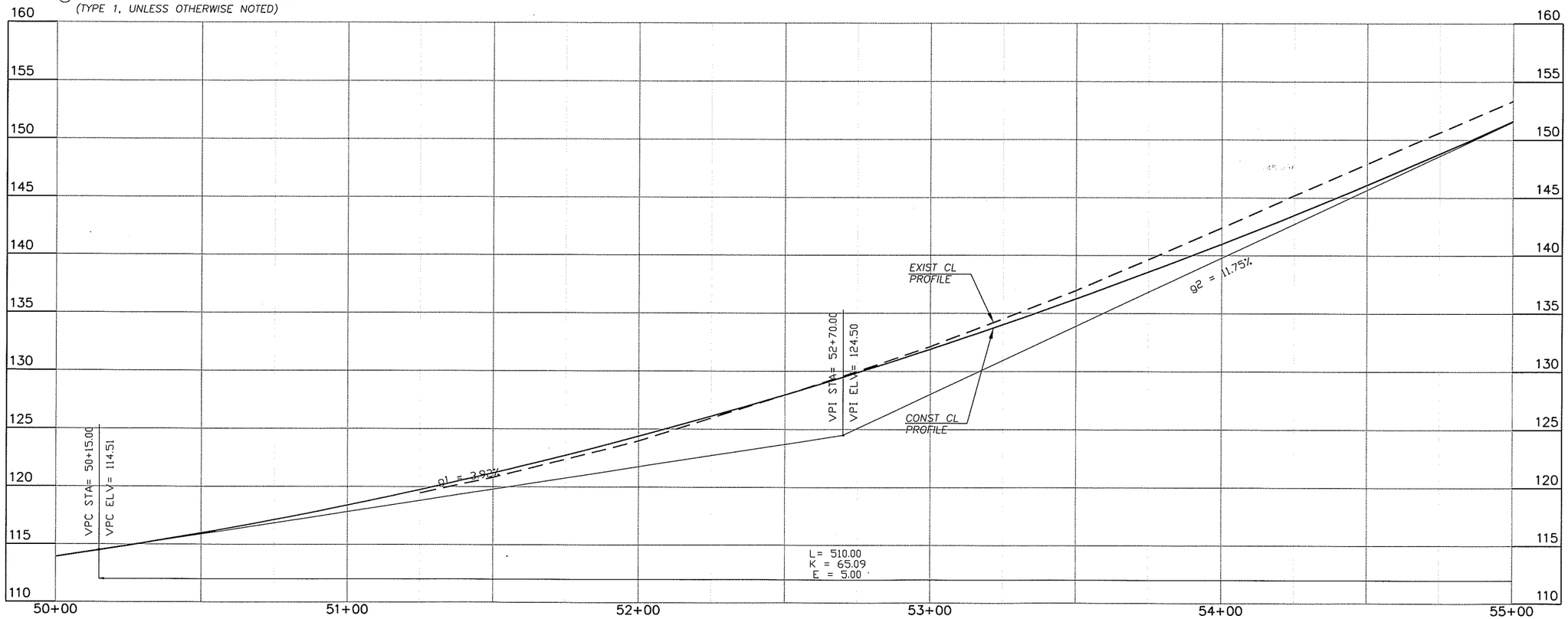

DESIGNED	BK/JM
DRAWN	KB/RK
CRP	340622
HOR.	SEE SHEET
VERT.	SEE SHEET
DATE	10/31/05
DWG:	PP1
SHEET	X OF X

CALL 48 HOURS BEFORE YOU DIG 1-800-553-4344 "It's the Law" NORTHWEST UTILITIES NOTIFICATION CENTER

STATE OF WASHINGTON BRUCE A. KLUG 38868 REGISTERED PROFESSIONAL ENGINEER EXPIRES APRIL 7, 2006

ENGINEERING PROGRAM DESIGN SECTION

NE 119TH STREET WEST

PLAN & PROFILE (STA 50+00 TO STA 55+00)

proud past, promising future

CLARK COUNTY WASHINGTON

N:\CIP\PROJECTS\340622-NE119thStWest-SalmonCrAve-NE72ndAve\DESIGN\DWGS\PP1.dwg, Layout1, 10/25/2005 5:07:37 PM, beglejk

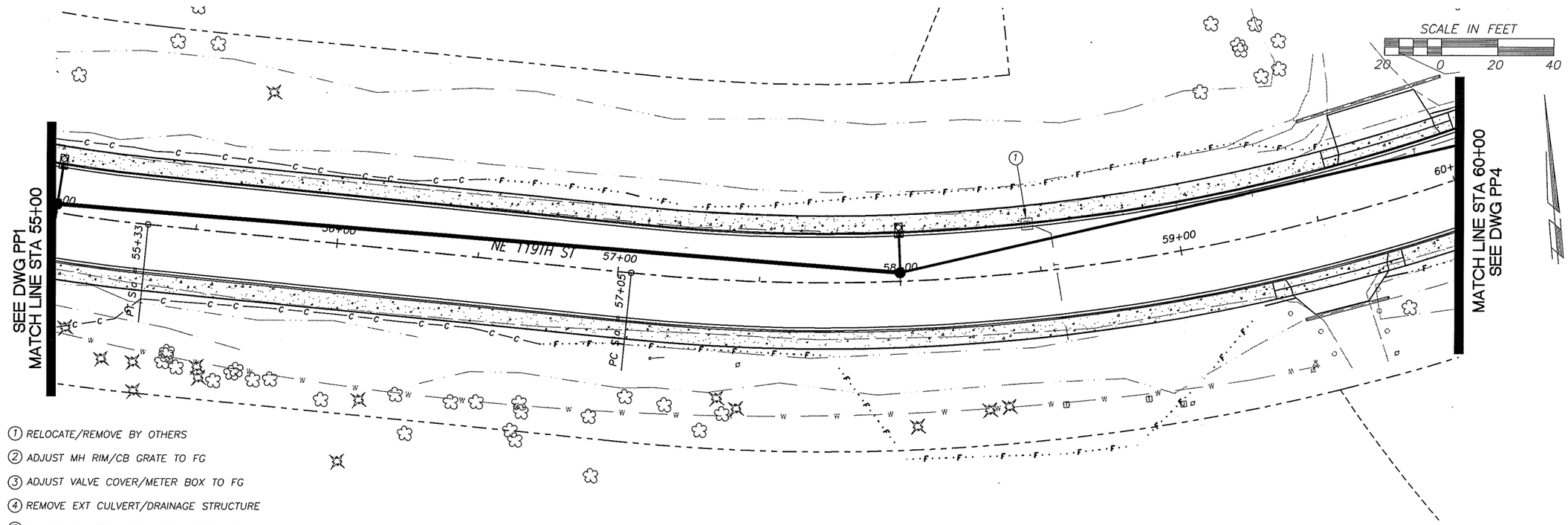

1. RELOCATE/REMOVE BY OTHERS
2. ADJUST MH RIM/CB GRATE TO FG
3. ADJUST VALVE COVER/METER BOX TO FG
4. REMOVE EXT CULVERT/DRAINAGE STRUCTURE
5. SAWCUT AND/OR MATCH EXT CURB AND/OR S/W.
6. RELOCATE EXIST MAILBOX TO STA LISTED. (TYPE 1, UNLESS OTHERWISE NOTED)

UNADJUSTED EARTHWORK QUANTITIES

EXCAVATION
EMBANKMENT

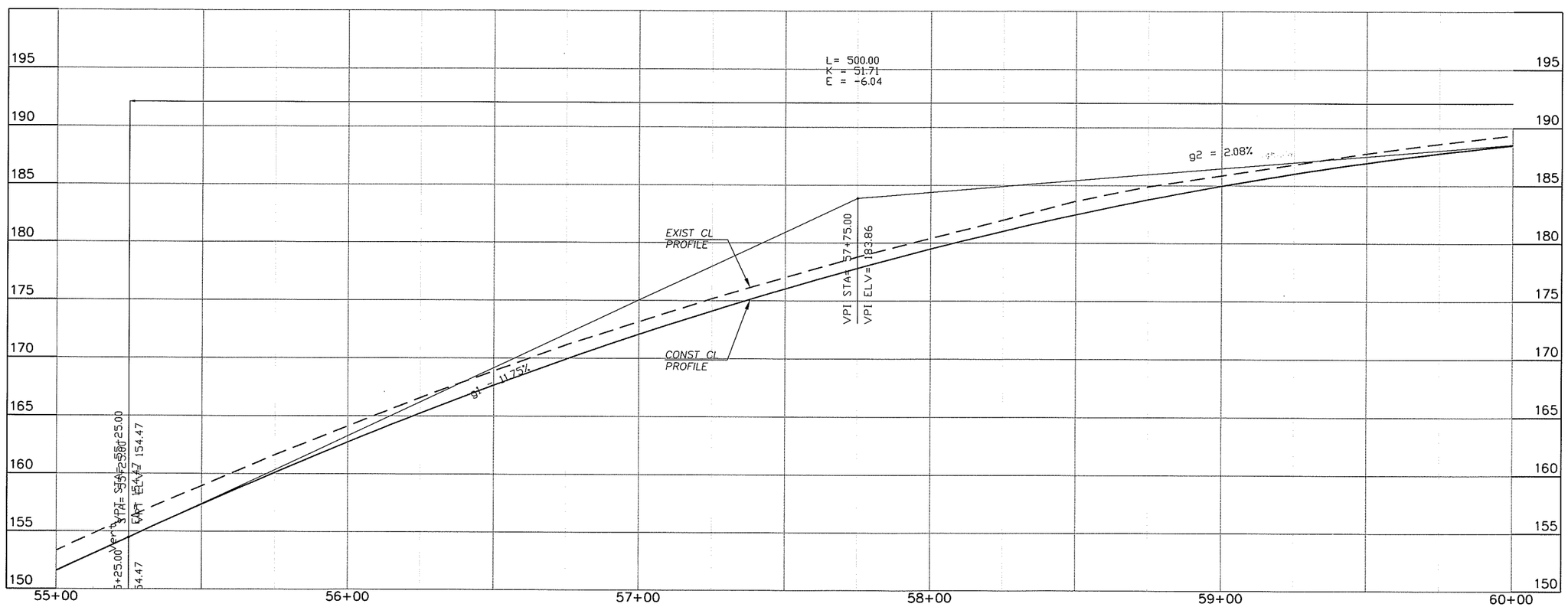

DESIGNED	BK/JM
DRAWN	KB/RK
CRP	340622
HOR.	SEE SHEET
VERT.	SEE SHEET
DATE	10/31/05
DWG:	PP2
SHEET	X OF X

CALL 48 HOURS BEFORE YOU DIG
1-800-553-4344
"It's the Law"
NORTHWEST UTILITIES NOTIFICATION CENTER

STATE OF WASHINGTON
JOSEPH A. KILIC
NUMBER 36415
REGISTERED PROFESSIONAL ENGINEER
EXPIRES: APRIL 2006

ENGINEERING PROGRAM
DESIGN SECTION

NE 119TH STREET WEST

PLAN & PROFILE (STA 55+00 TO STA 60+00)

proud past, promising future
CLARK COUNTY
WASHINGTON

N:\CIP\PROJECTS\340622-NE119thStWest-SalmonCrAve-NE72ndAve\DESIGN\DWGS\PP2.dwg, Layout1, 10/25/2005 5:07:49 PM, begjeyk

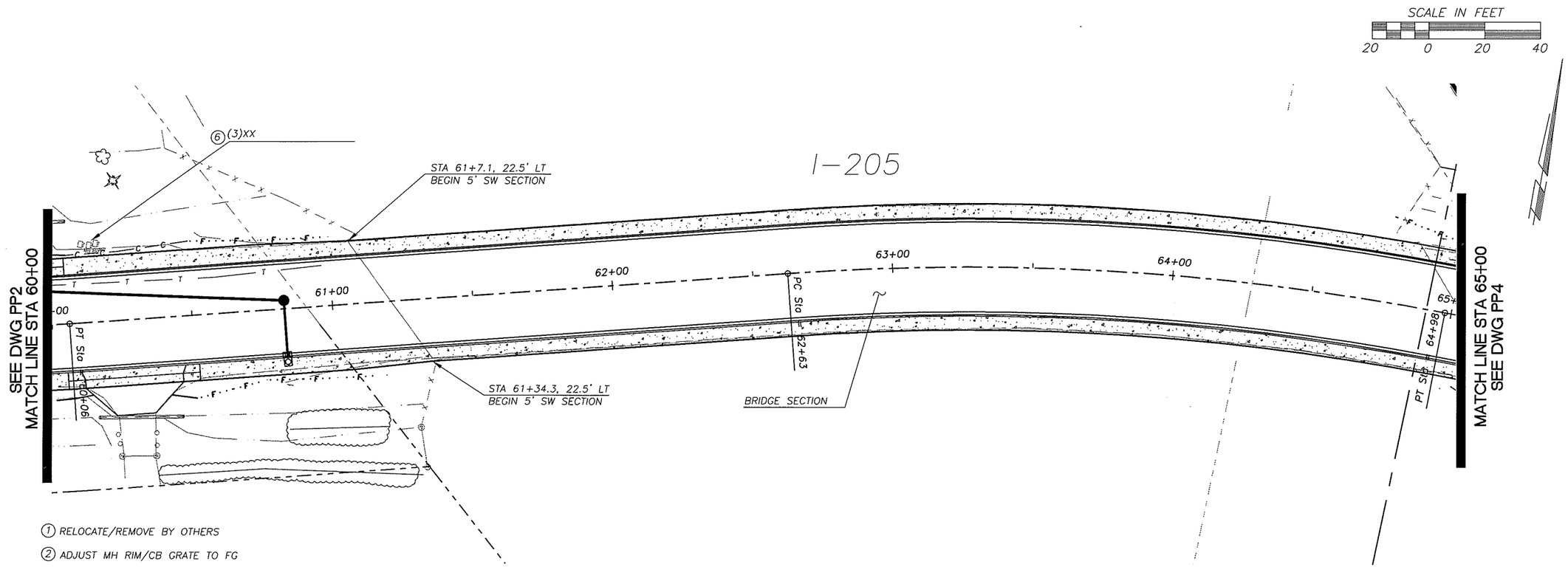

1. RELOCATE/REMOVE BY OTHERS
2. ADJUST MH RIM/CB GRATE TO FG
3. ADJUST VALVE COVER/METER BOX TO FG
4. REMOVE EXT CULVERT/DRAINAGE STRUCTURE
5. SAWCUT AND/OR MATCH EXT CURB AND/OR S/W.
6. RELOCATE EXIST MAILBOX TO STA LISTED. (TYPE 1, UNLESS OTHERWISE NOTED)

UNADJUSTED EARTHWORK QUANTITIES

EXCAVATION
EMBANKMENT

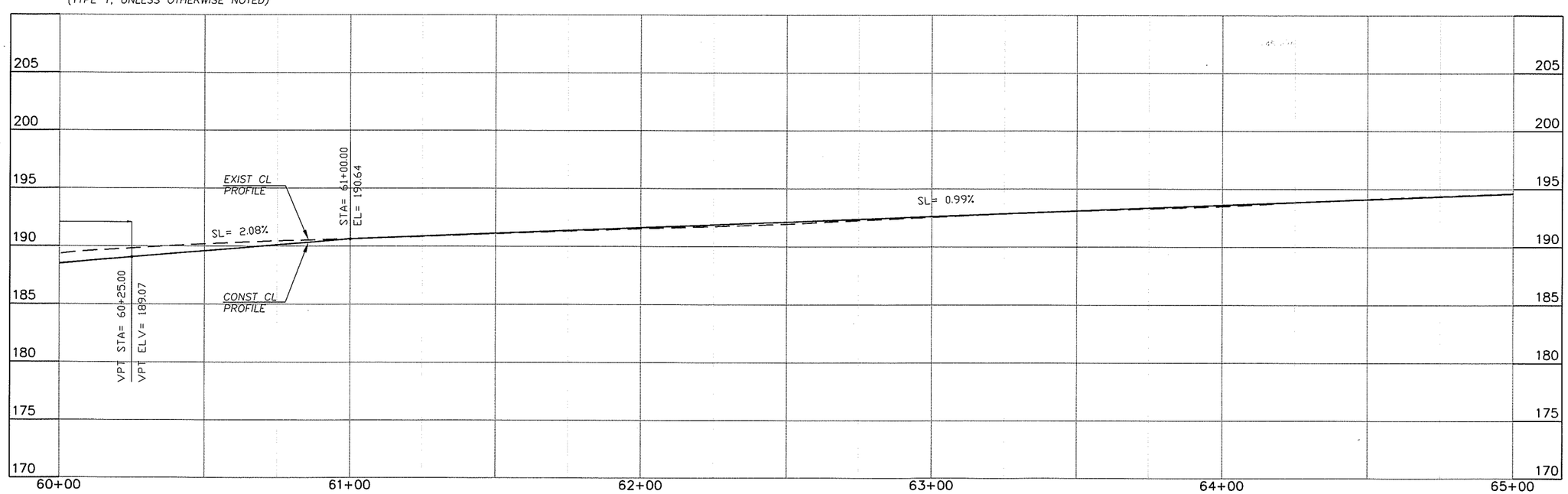

DESIGNED BK/JM
DRAWN KB/RK
CRP 340622
HOR. SEE SHEET
VERT. SEE SHEET
DATE 10/31/05
DWG: PP3
SHEET X OF X

CALL 48 HOURS BEFORE YOU DIG
1-800-553-4344
"It's the Law"
NORTHWEST UTILITIES NOTIFICATION CENTER

STATE OF WASHINGTON
JOSEPH A. VALIC
31868
REGISTERED PROFESSIONAL ENGINEER
EXPIRES APRIL 7, 2006

ENGINEERING PROGRAM
DESIGN SECTION

NE 119TH STREET WEST
PLAN & PROFILE (STA 60+00 TO STA 65+00)

proud past, promising future
CLARK COUNTY
WASHINGTON

N:\CIP\PROJECTS\340622-NE119thSt\West-SalmonCrAve-NE72ndAve\DESIGN\DWGS\PP3.dwg, Layout1, 10/25/2005 5:07:59 PM, beglejyk

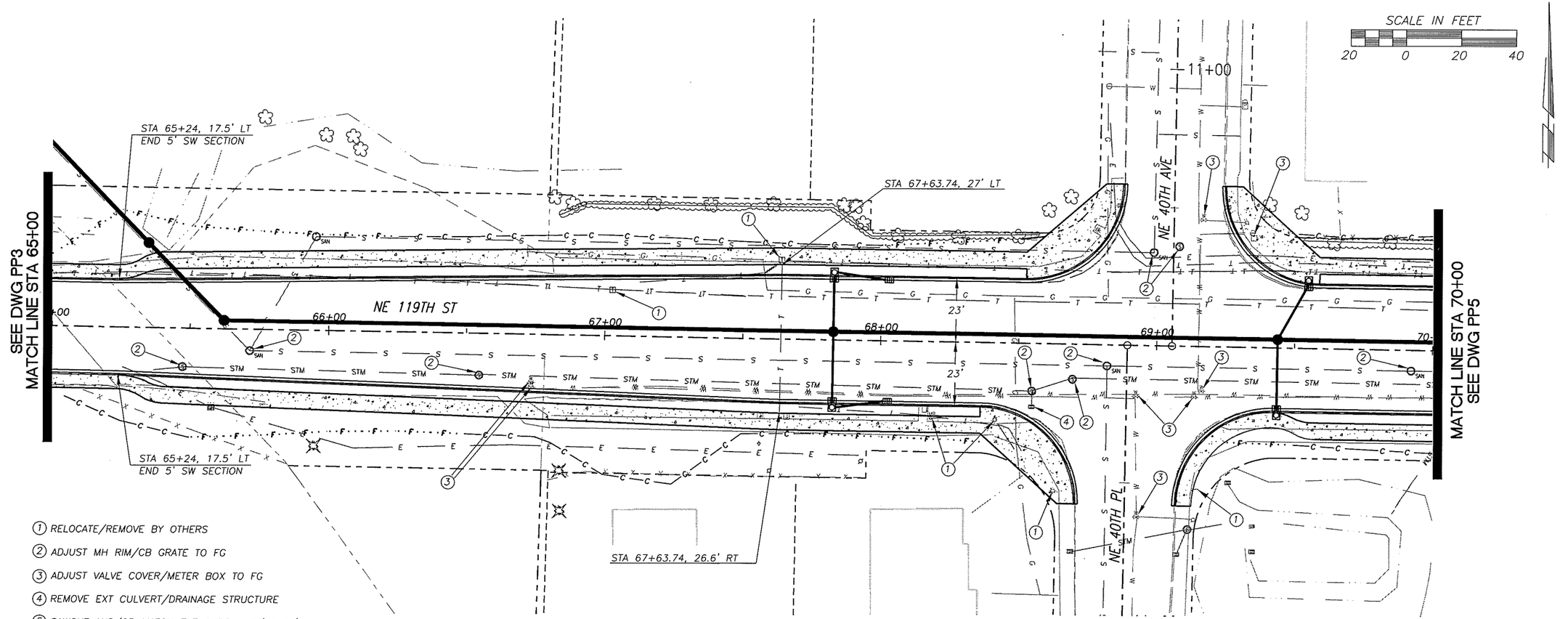

① RELOCATE/REMOVE BY OTHERS

② ADJUST MH RIM/CB GRATE TO FG

③ ADJUST VALVE COVER/METER BOX TO FG

④ REMOVE EXT CULVERT/DRAINAGE STRUCTURE

⑤ SAWCUT AND/OR MATCH EXT CURB AND/OR S/W.

⑥ RELOCATE EXIST MAILBOX TO STA LISTED. (TYPE 1, UNLESS OTHERWISE NOTED)

UNADJUSTED EARTHWORK QUANTITIES

EXCAVATION	
EMBANKMENT	

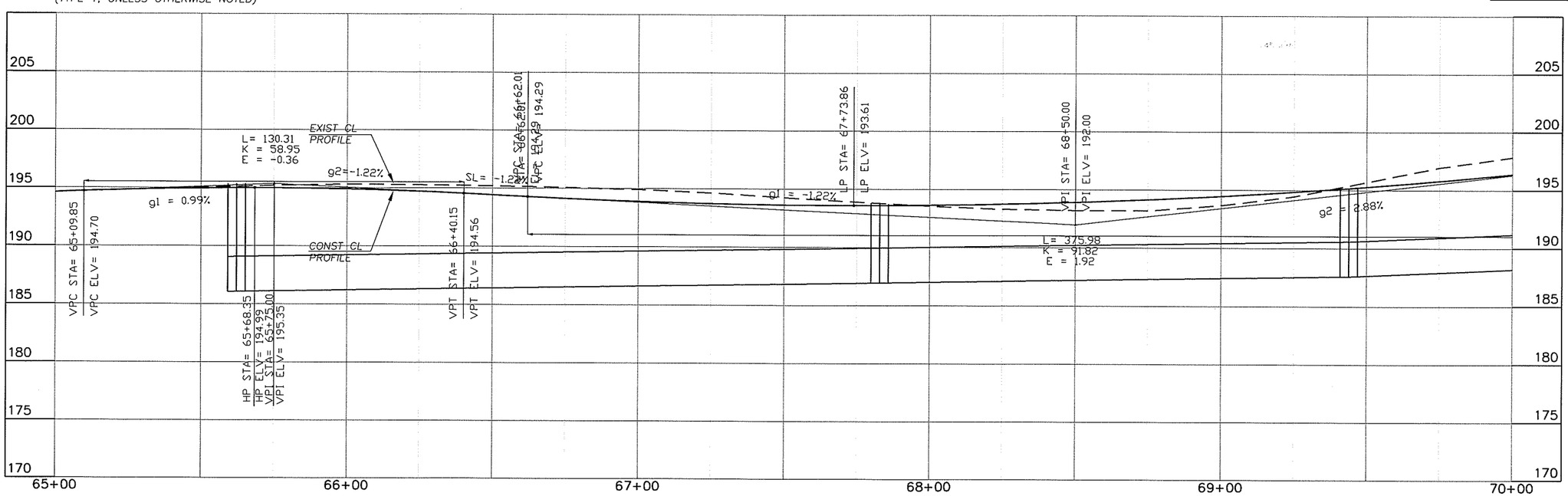

DESIGNED BK/JM
DRAWN KB/RK
CRP 340622
HOR. SEE SHEET
VERT. SEE SHEET
DATE 10/31/05
DWG: PP4
SHEET X OF X

CALL 48 HOURS BEFORE YOU DIG
1-800-553-4344
"It's the Law"
NORTHWEST UTILITIES NOTIFICATION CENTER

STATE OF WASHINGTON
JOSEPH A. VELOC
38868
REGISTERED PROFESSIONAL ENGINEER
EXPIRES APRIL 7, 2006

ENGINEERING PROGRAM
DESIGN SECTION

NE 119TH STREET WEST

PLAN & PROFILE (STA 65+00 TO STA 70+00)

proud past, promising future

CLARK COUNTY
WASHINGTON

N:\CIP\PROJECTS\340622-NE119thStWest-SalmonCrAve-NE72ndAve\DESIGN\DWGS\PP4.dwg, Layout1, 10/25/2005 5:08:10 PM, begleyk

1. RELOCATE/REMOVE BY OTHERS
2. ADJUST MH RIM/CB GRATE TO FG
3. ADJUST VALVE COVER/METER BOX TO FG
4. REMOVE EXT CULVERT/DRAINAGE STRUCTURE
5. SAWCUT AND/OR MATCH EXT CURB AND/OR S/W.
6. RELOCATE EXIST MAILBOX TO STA LISTED. (TYPE 1, UNLESS OTHERWISE NOTED)

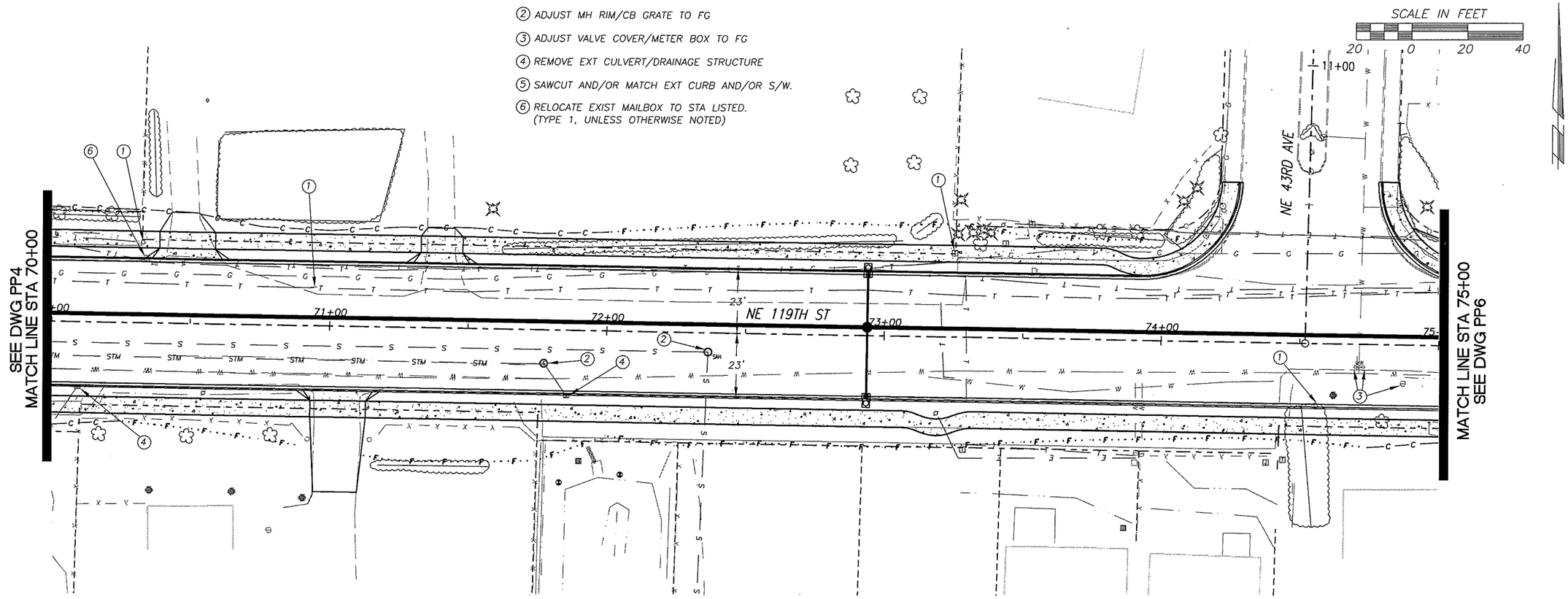

UNADJUSTED EARTHWORK QUANTITIES

EXCAVATION	
EMBANKMENT	

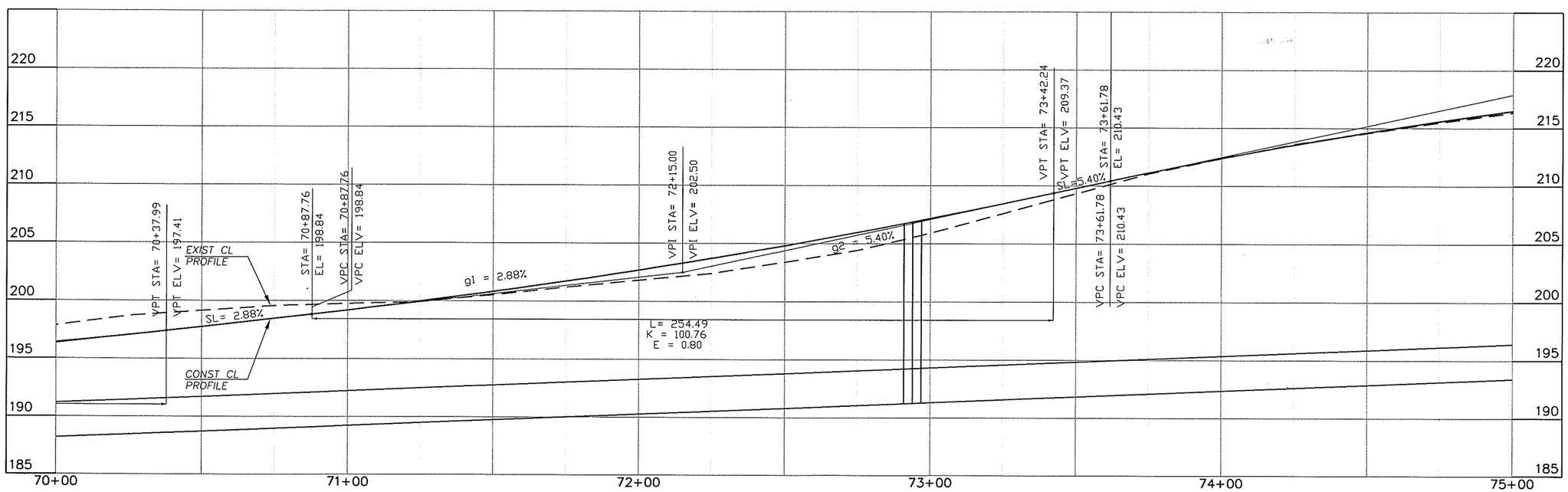

DESIGNED	BK/JM
DRAWN	KB/RK
CRP	340622
HOR.	SEE SHEET
VERT.	SEE SHEET
DATE	10/31/05
DWG:	PP5
SHEET	X OF X

CALL 48 HOURS BEFORE YOU DIG
1-800-553-4344
"It's the Law"
NORTHWEST UTILITIES NOTIFICATION CENTER

STATE OF WASHINGTON
BRUCE A. KILIC
30868
PROFESSIONAL ENGINEER
EXPIRES APRIL 7, 2006

ENGINEERING PROGRAM
DESIGN SECTION

NE 119TH STREET WEST
PLAN & PROFILE (STA 70+00 TO STA 75+00)

proud past, promising future
CLARK COUNTY
WASHINGTON

N:\CIP\PROJECTS\340622-NE119thStWest-SalmonCrAve-NE72ndAve\DESIGN\DWGS\PP5.dwg, Layout1, 10/25/2005 5:08:18 PM, begleyk

1. RELOCATE/REMOVE BY OTHERS
2. ADJUST MH RIM/CB GRATE TO FG
3. ADJUST VALVE COVER/METER BOX TO FG
4. REMOVE EXT CULVERT/DRAINAGE STRUCTURE
5. SAWCUT AND/OR MATCH EXT CURB AND/OR S/W.
6. RELOCATE EXIST MAILBOX TO STA LISTED. (TYPE 1, UNLESS OTHERWISE NOTED)

SCALE IN FEET
20 0 20 40

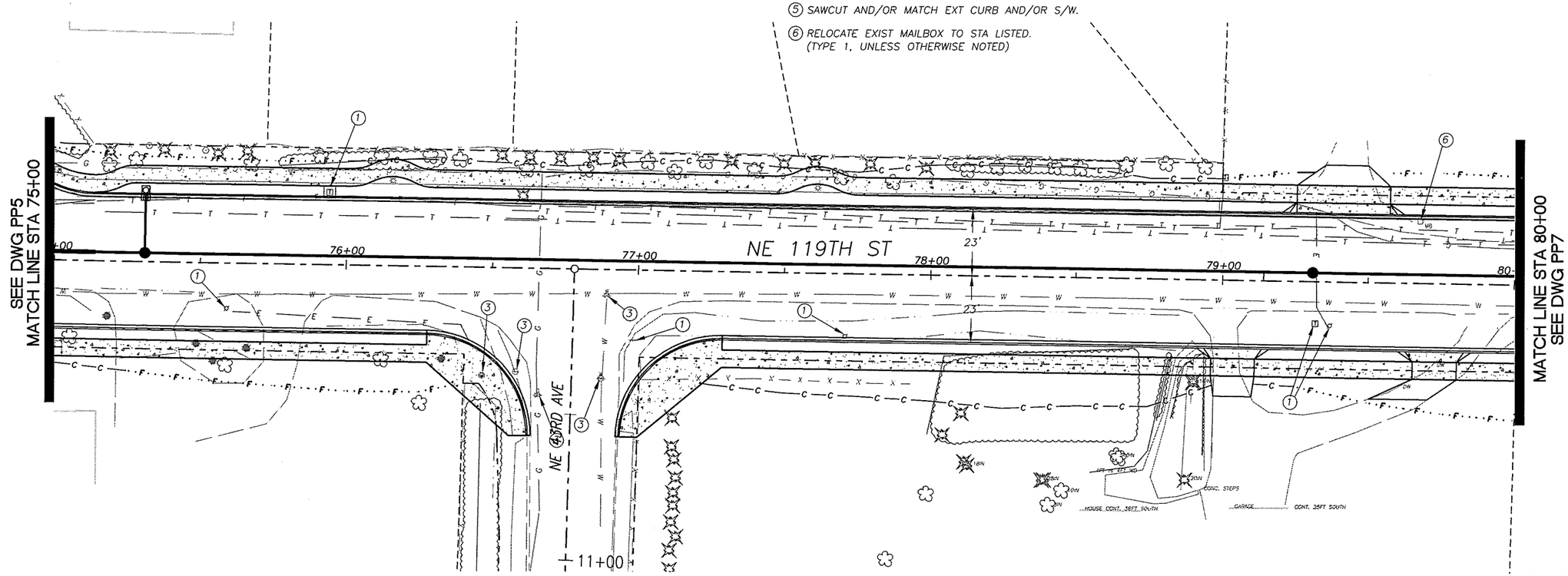

UNADJUSTED EARTHWORK QUANTITIES

EXCAVATION	
EMBANKMENT	

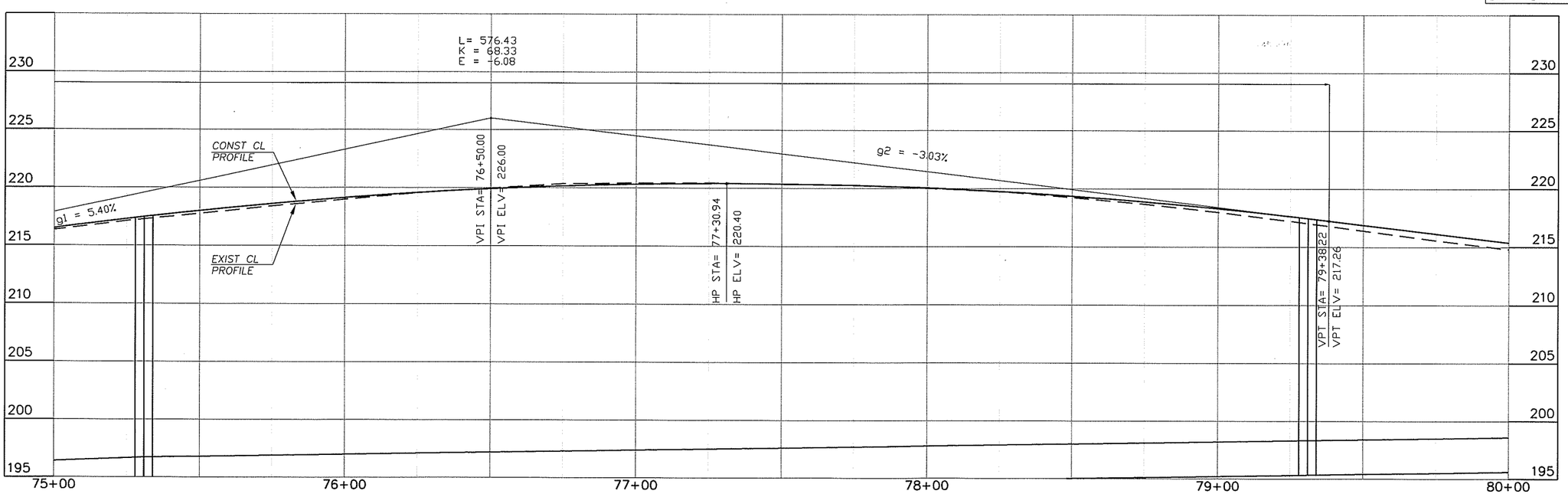

DESIGNED	BK/JM
DRAWN	KB/RK
CRP	340622
HOR.	SEE SHEET
VERT.	SEE SHEET
DATE	10/31/05
DWG:	PP6
SHEET	X OF X

CALL 48 HOURS BEFORE YOU DIG
1-800-553-4344
"It's the Law"
NORTHWEST UTILITIES NOTIFICATION CENTER

STEVEN A. KLAUS
STATE OF WASHINGTON
37884
PROFESSIONAL ENGINEER
EXPIRES APRIL 7, 2006

ENGINEERING PROGRAM
DESIGN SECTION

NE 119TH STREET WEST
PLAN & PROFILE (STA 75+00 TO STA 80+00)

proud past, promising future
CLARK COUNTY
WASHINGTON

N:\CIP\PROJECTS\340622-NE119thStWest-SalmonCrAve-NE72ndAve\DESIGN\DWGS\PP6.dwg, Layout1, 10/25/2005 5:08:30 PM, begleyk

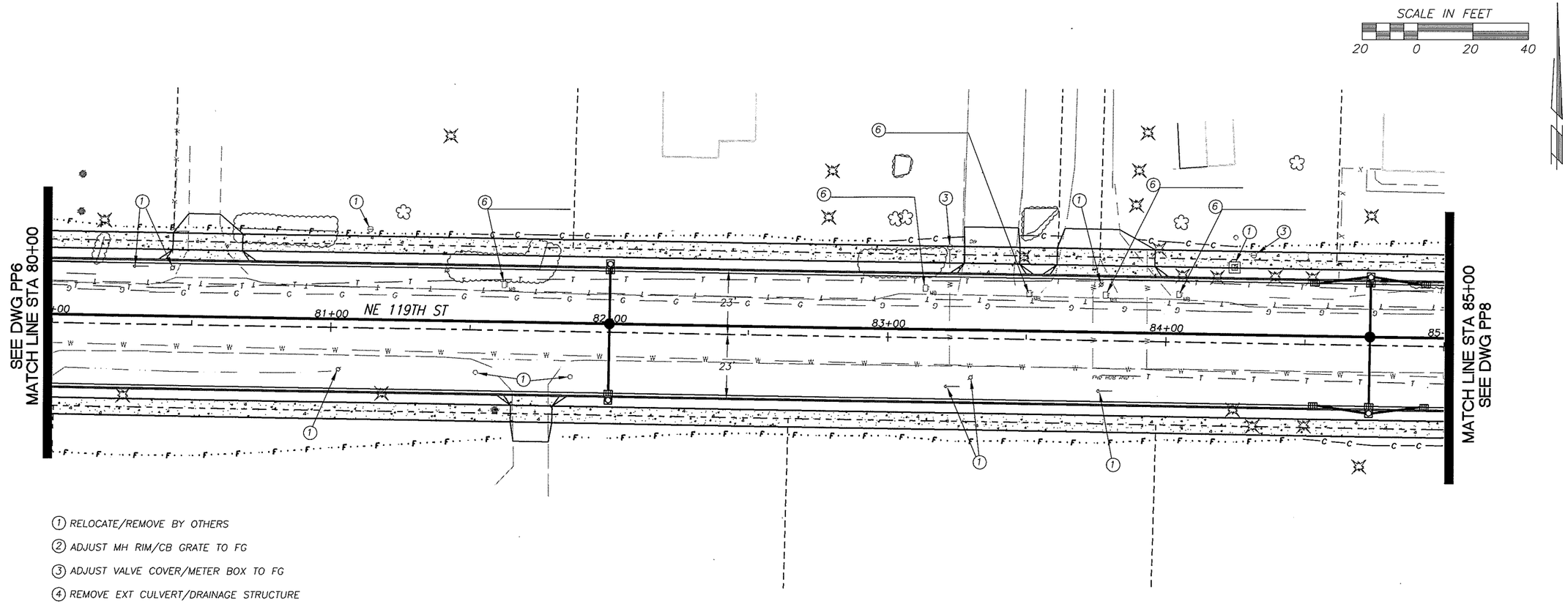

(1) RELOCATE/REMOVE BY OTHERS

(2) ADJUST MH RIM/CB GRATE TO FG

(3) ADJUST VALVE COVER/METER BOX TO FG

(4) REMOVE EXT CULVERT/DRAINAGE STRUCTURE

(5) SAWCUT AND/OR MATCH EXT CURB AND/OR S/W.

(6) RELOCATE EXIST MAILBOX TO STA LISTED. (TYPE 1, UNLESS OTHERWISE NOTED)

UNADJUSTED EARTHWORK QUANTITIES

EXCAVATION
EMBANKMENT

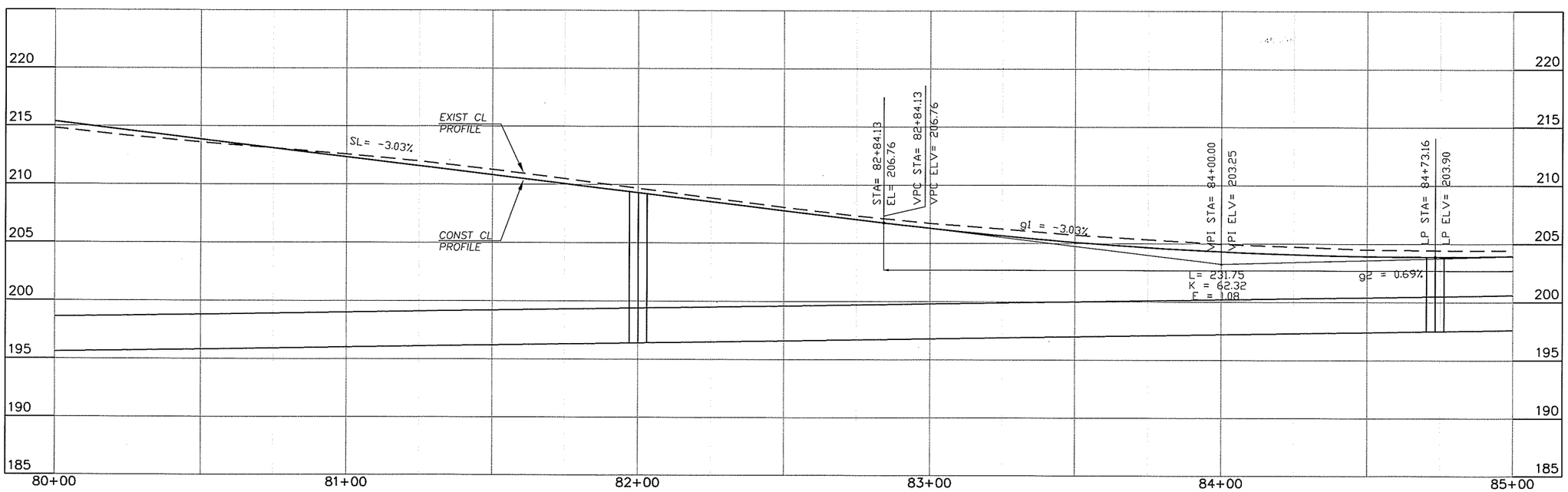

DESIGNED	BK/JM
DRAWN	KB/RK
CRP	340622
HOR.	SEE SHEET
VERT.	SEE SHEET
DATE	10/31/05
DWG:	PP7
SHEET	X OF X

CALL 48 HOURS BEFORE YOU DIG
1-800-553-4344
"It's the Law"
NORTHWEST UTILITIES NOTIFICATION CENTER

STATE OF WASHINGTON
BRUCE A. KLUG
19988
REGISTERED PROFESSIONAL ENGINEER
EXPIRES APRIL 7, 2006

ENGINEERING PROGRAM
DESIGN SECTION

NE 119TH STREET WEST
PLAN & PROFILE (STA 80+00 TO STA 85+00)

proud past, promising future
CLARK COUNTY
WASHINGTON

N:\CIP\PROJECTS\340622-NE119thSt\West-SalmonCrAve-NE72ndAve\DESIGN\DWGS\PP7.dwg, Layout1, 10/25/2005 5:08:40 PM, begleyk

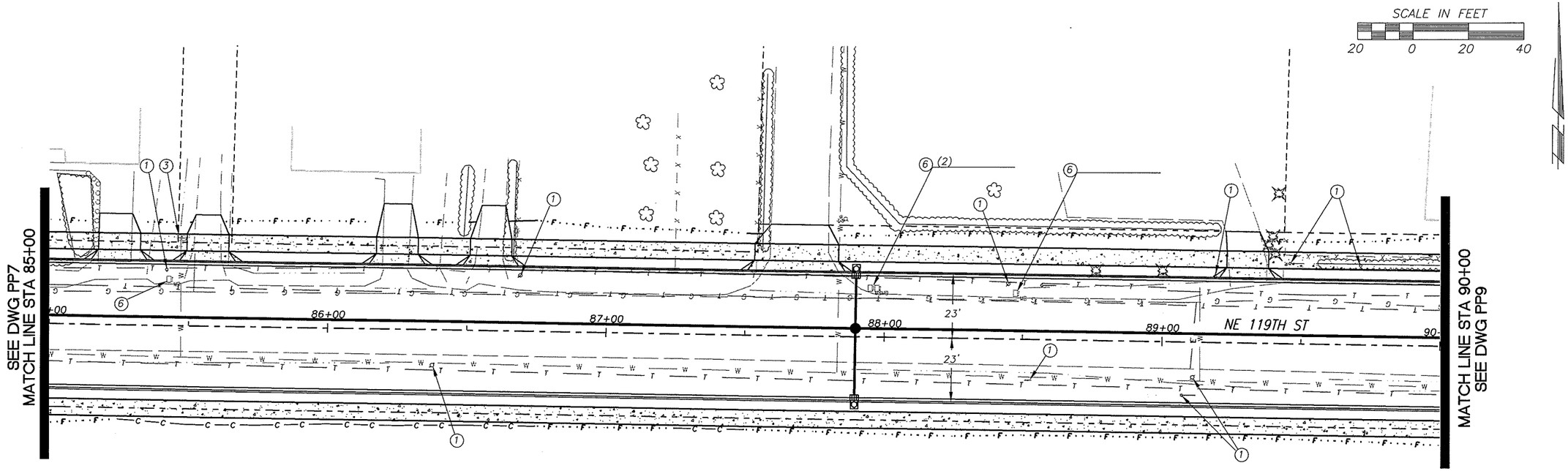

(1) RELOCATE/REMOVE BY OTHERS

(2) ADJUST MH RIM/CB GRATE TO FG

(3) ADJUST VALVE COVER/METER BOX TO FG

(4) REMOVE EXT CULVERT/DRAINAGE STRUCTURE

(5) SAWCUT AND/OR MATCH EXT CURB AND/OR S/W.

(6) RELOCATE EXIST MAILBOX TO STA LISTED. (TYPE 1, UNLESS OTHERWISE NOTED)

UNADJUSTED EARTHWORK QUANTITIES

EXCAVATION
EMBANKMENT

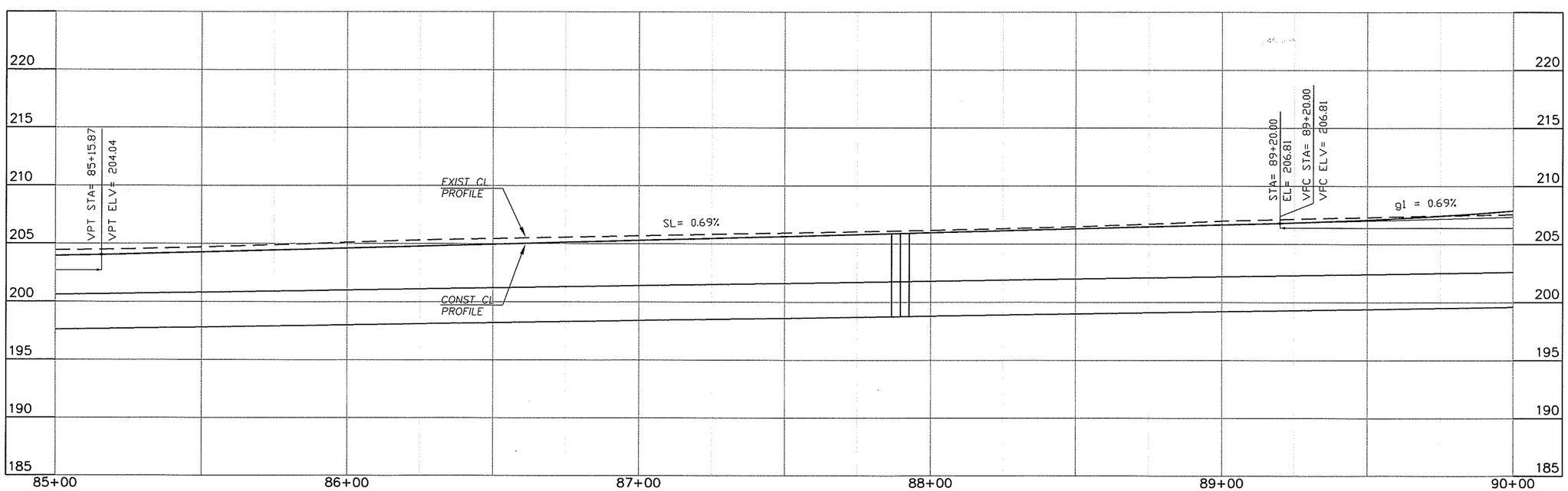

DESIGNED BK/JM
DRAWN KB/RK
CRP 340622
HOR. SEE SHEET
VERT. SEE SHEET
DATE 10/31/05
DWG: PP8
SHEET X OF X

CALL 48 HOURS BEFORE YOU DIG 1-800-553-4344 "It's the Law" NORTHWEST UTILITIES NOTIFICATION CENTER

STEVEN A. KLUG STATE OF WASHINGTON 32664 REGISTERED PROFESSIONAL ENGINEER EXPIRES APRIL 7, 2006

ENGINEERING PROGRAM
DESIGN SECTION

NE 119TH STREET WEST
PLAN & PROFILE (STA 85+00 TO STA 90+00)

proud past, promising future
CLARK COUNTY WASHINGTON

N:\C\P\PROJECTS\340622-NE119thStWest-SalmonCrAve-NE72ndAve\DESIGN\DWGS\PP8.dwg, Layout1, 10/25/2005 5:08:50 PM, begleyk

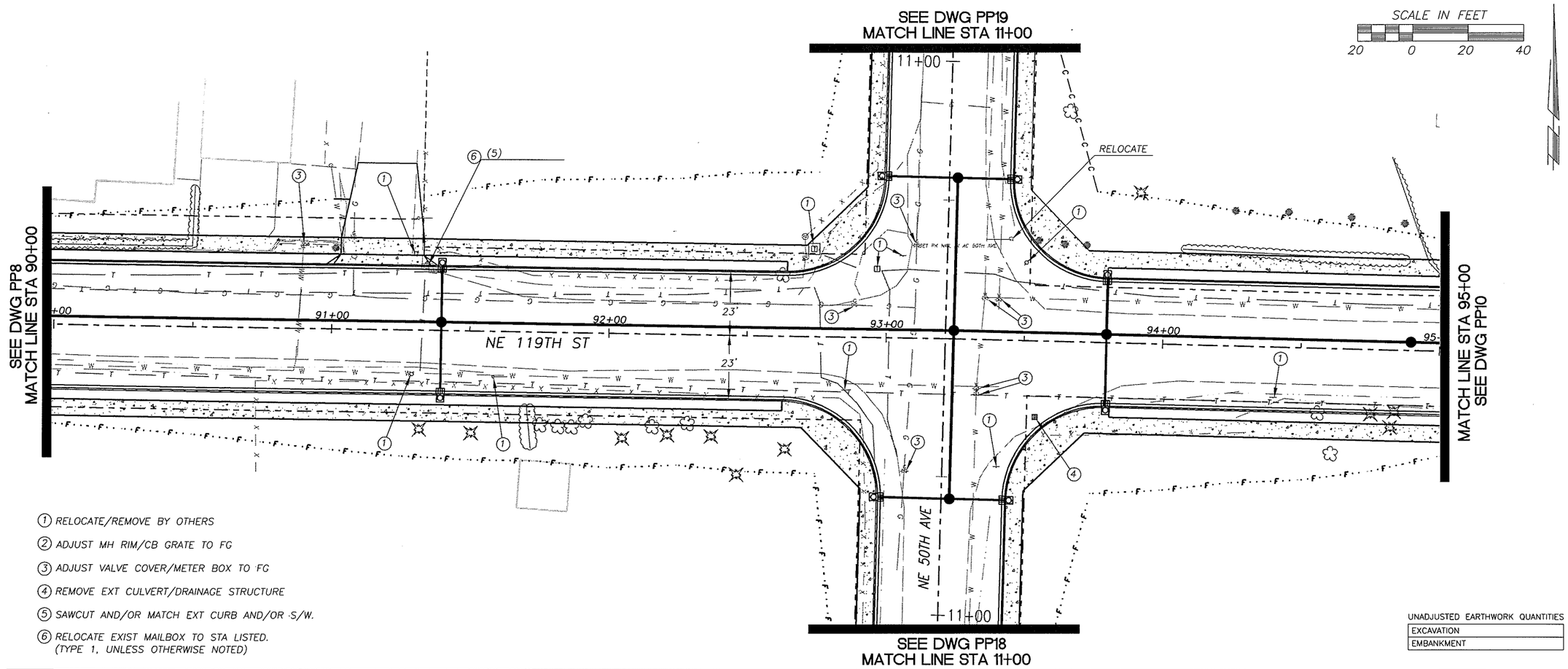

1. RELOCATE/REMOVE BY OTHERS
2. ADJUST MH RIM/CB GRATE TO FG
3. ADJUST VALVE COVER/METER BOX TO FG
4. REMOVE EXT CULVERT/DRAINAGE STRUCTURE
5. SAWCUT AND/OR MATCH EXT CURB AND/OR S/W.
6. RELOCATE EXIST MAILBOX TO STA LISTED. (TYPE 1, UNLESS OTHERWISE NOTED)

UNADJUSTED EARTHWORK QUANTITIES

EXCAVATION	
EMBANKMENT	

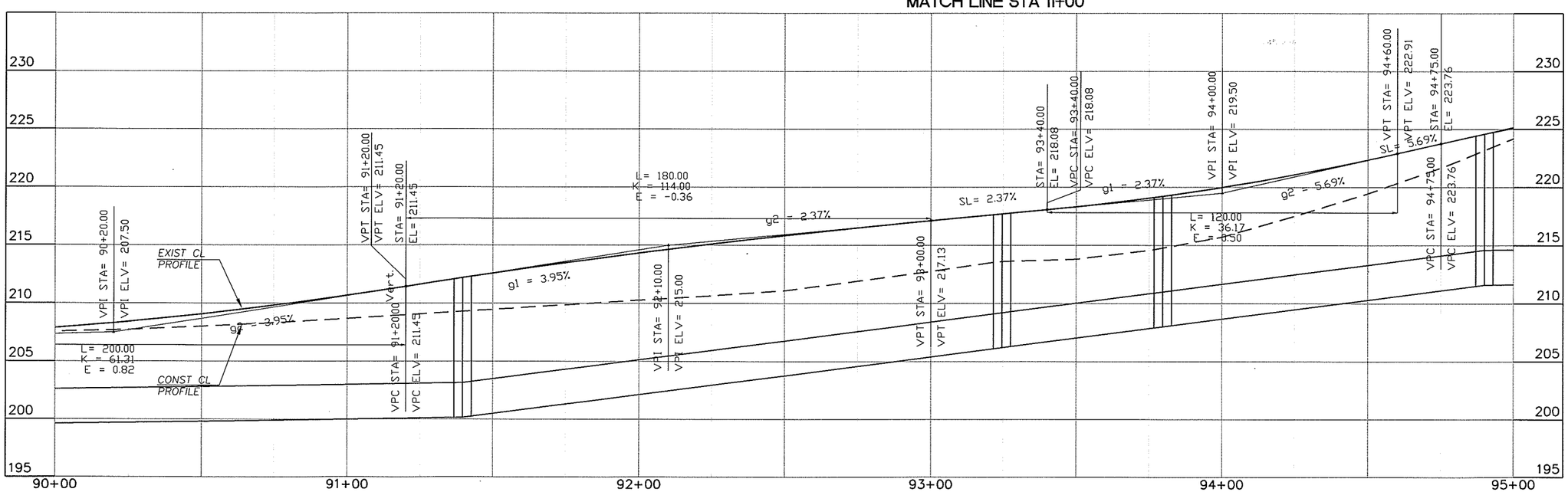

DESIGNED	BK/JM
DRAWN	KB/RK
CRP	340622
HOR.	SEE SHEET
VERT.	SEE SHEET
DATE	10/31/05
DWG:	PP9
SHEET	X OF X

CALL 48 HOURS BEFORE YOU DIG
1-800-553-4344
"It's the Law"
NORTHWEST UTILITIES NOTIFICATION CENTER

STATE OF WASHINGTON
KEVIN L. ALLEN
39688
REGISTERED PROFESSIONAL ENGINEER
EXPIRES APRIL 7, 2006

ENGINEERING PROGRAM
DESIGN SECTION

NE 119TH STREET WEST
PLAN & PROFILE (STA 90+00 TO STA 95+00)

proud past, promising future
CLARK COUNTY
WASHINGTON

N:\C\PROJECTS\340622-NE119thStWest-SalmonCrAve-NE72ndAve\DESIGN\DWGS\PP9.dwg, Layout1, 10/25/2005 5:09:01 PM, begleyk

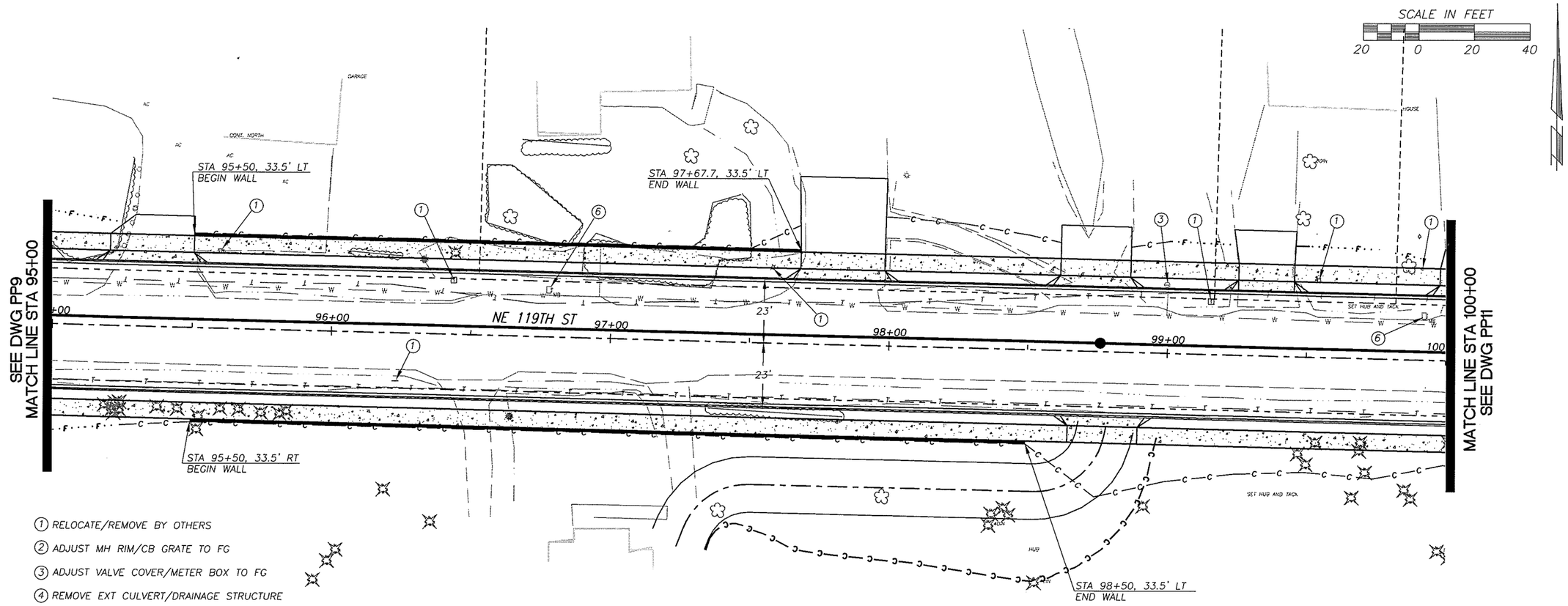

1. RELOCATE/REMOVE BY OTHERS
2. ADJUST MH RIM/CB GRATE TO FG
3. ADJUST VALVE COVER/METER BOX TO FG
4. REMOVE EXT CULVERT/DRAINAGE STRUCTURE
5. SAWCUT AND/OR MATCH EXT CURB AND/OR S/W.
6. RELOCATE EXIST MAILBOX TO STA LISTED. (TYPE 1, UNLESS OTHERWISE NOTED)

UNADJUSTED EARTHWORK QUANTITIES

EXCAVATION	
EMBANKMENT	

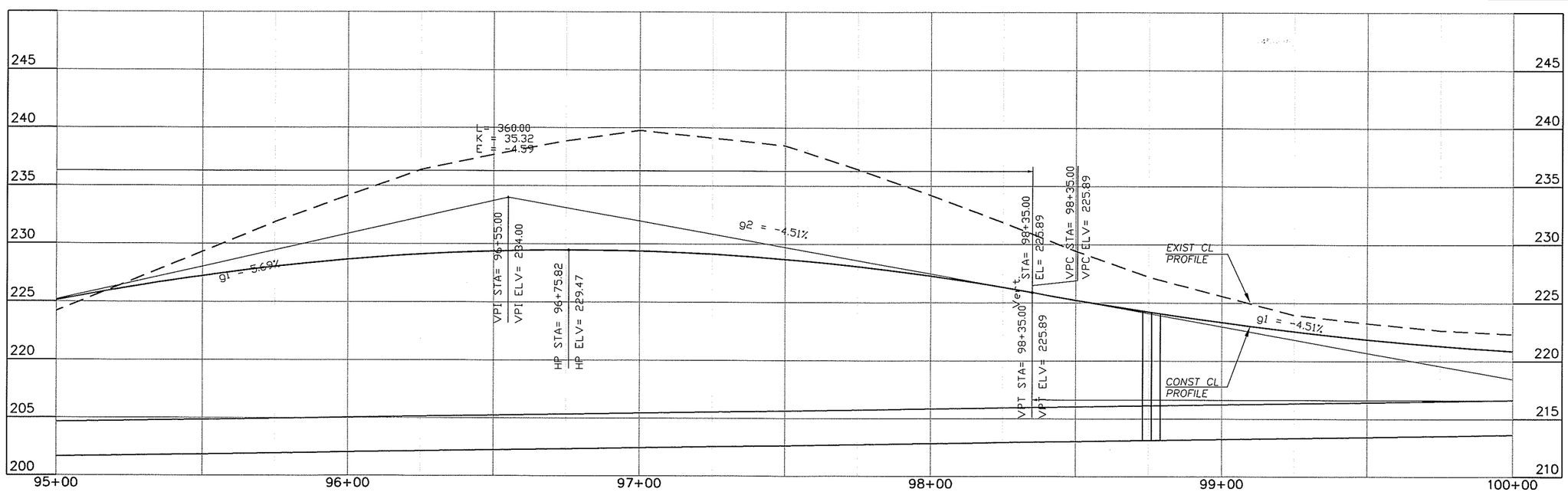

DESIGNED	BK/JM
DRAWN	KB/RK
CRP	340622
HOR.	SEE SHEET
VERT.	SEE SHEET
DATE	10/31/05
DWG:	PP10
SHEET	X OF X

CALL 48 HOURS BEFORE YOU DIG
1-800-553-4344
"It's the Law"
NORTHWEST UTILITIES NOTIFICATION CENTER

REGISTERED PROFESSIONAL ENGINEER
STATE OF WASHINGTON
39868
BRIAN A. KOLLER
EXPIRES APRIL 7, 2006

ENGINEERING PROGRAM
DESIGN SECTION

NE 119TH STREET WEST
PLAN & PROFILE (STA 95+00 TO STA 100+00)

proud past, promising future
CLARK COUNTY
WASHINGTON

N:\CIP\PROJECTS\340622-NE119thStWest-SalmonCrAve-NE72ndAve\DESIGN\DWGS\PP10.dwg, Layout1, 10/25/2005 5:09:12 PM, begleyk

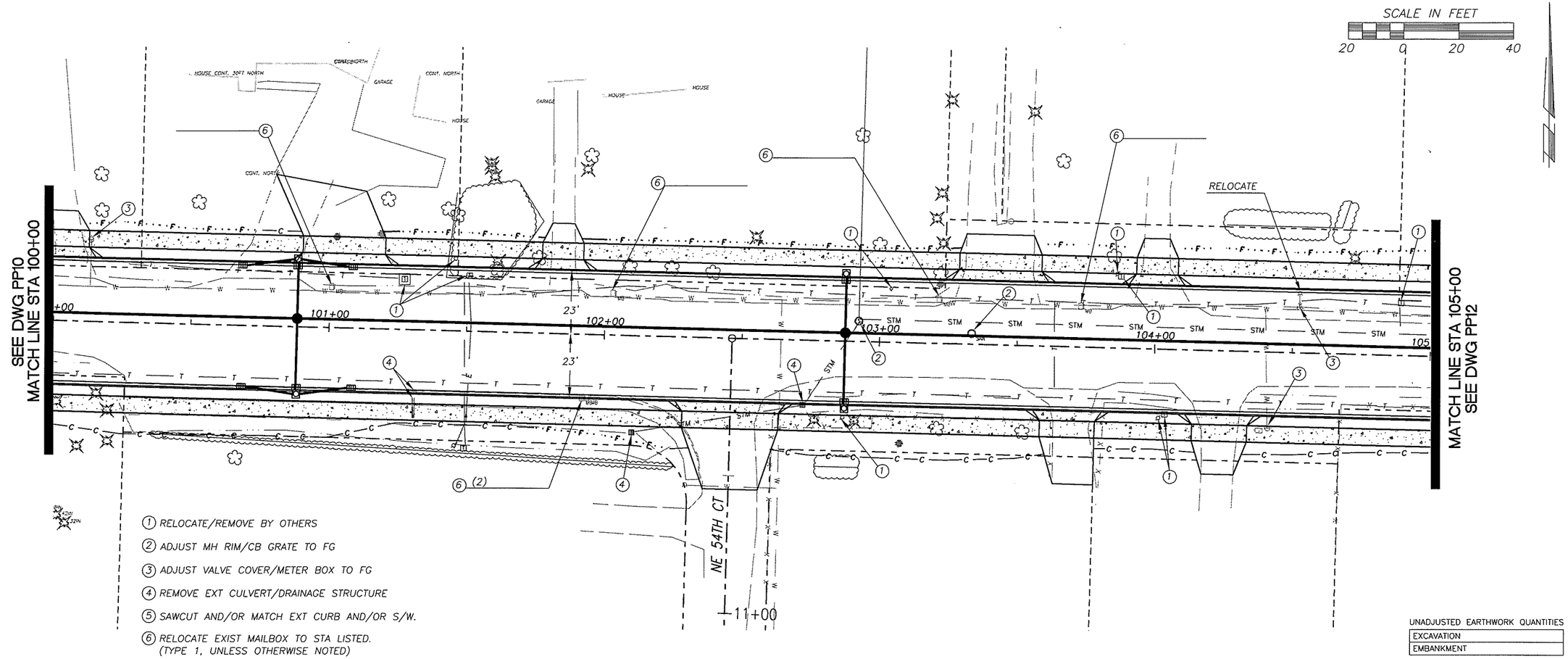

UNADJUSTED EARTHWORK QUANTITIES

EXCAVATION	
EMBANKMENT	

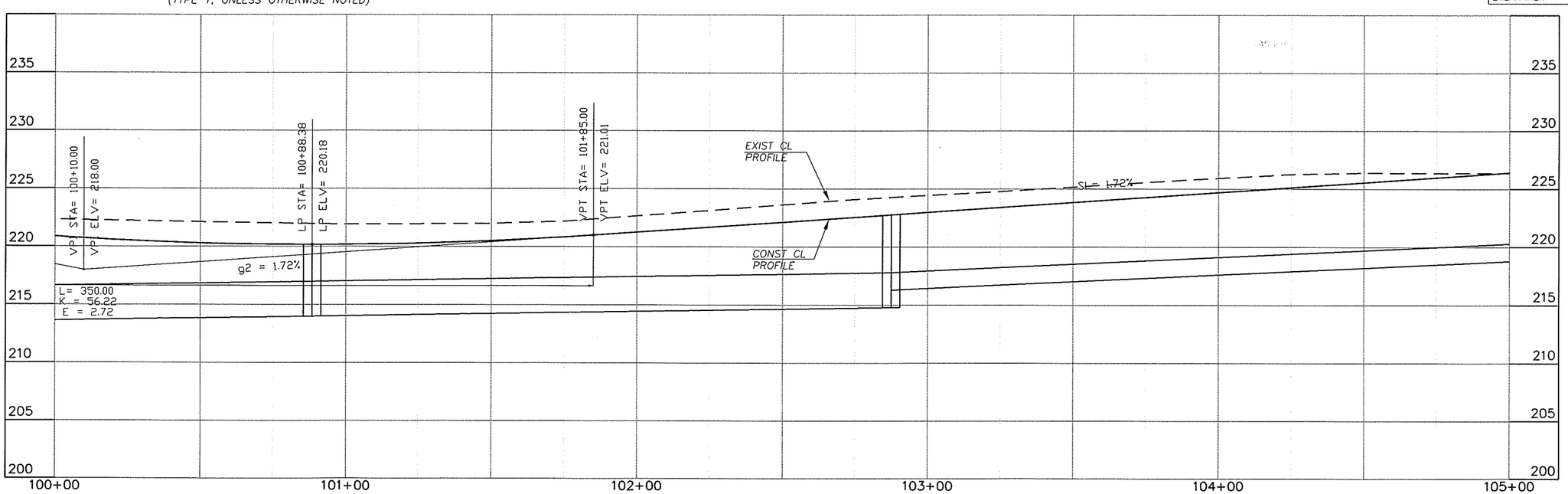

DESIGNED	BK/JM
DRAWN	KB/RK
CRP	340622
HOR.	SEE SHEET
VERT.	SEE SHEET
DATE	10/31/05
DWG:	PP11
SHEET	X OF X

CALL 48 HOURS BEFORE YOU DIG
1-800-553-4344
"It's the Law"
NORTHWEST UTILITIES NOTIFICATION CENTER

STATE OF WASHINGTON
JULIE A. KOLLER
33868
PROFESSIONAL ENGINEER
EXPIRES APRIL 7, 2006

ENGINEERING PROGRAM
DESIGN SECTION

NE 119TH STREET WEST
PLAN & PROFILE (STA 100+00 TO STA 105+00)

proud past, promising future
CLARK COUNTY
WASHINGTON

N:\C\P\PROJECTS\340622-NE119thStWest-SalmonCrAve-NE72ndAve\DESIGN\DWGS\PP11.dwg, Layout1, 10/25/2005 5:09:23 PM, begleyk

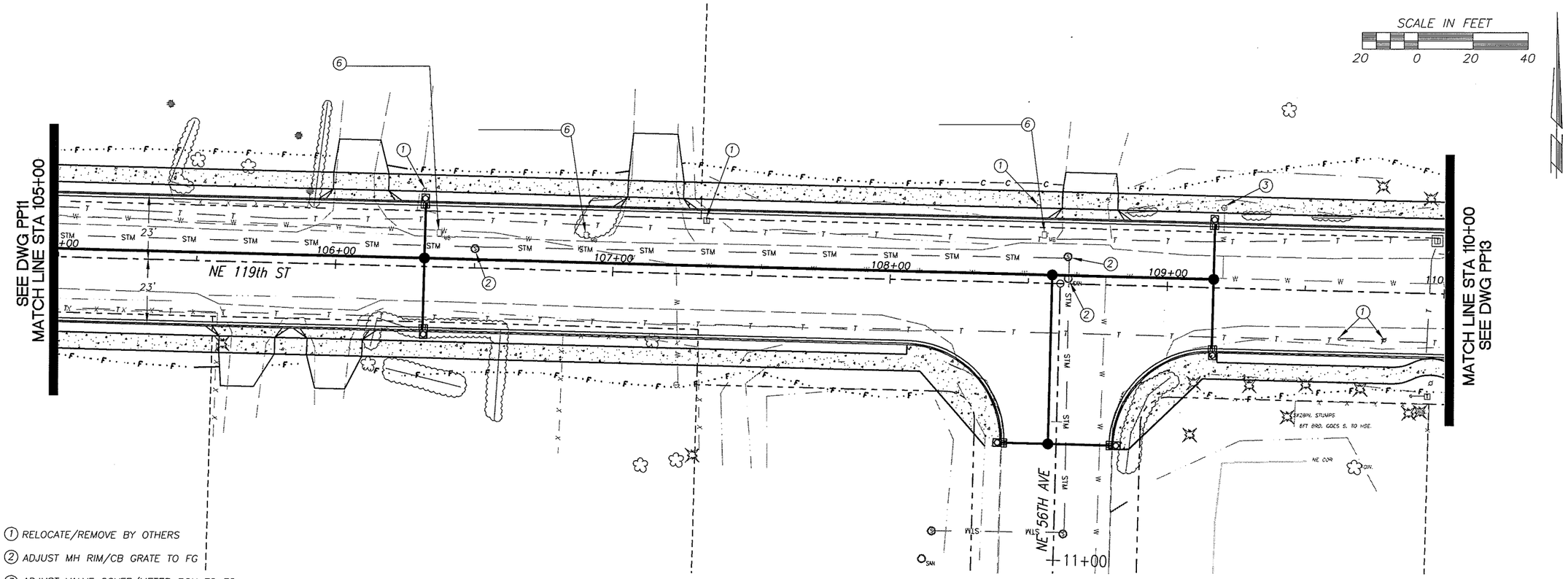

1. RELOCATE/REMOVE BY OTHERS
2. ADJUST MH RIM/CB GRATE TO FG
3. ADJUST VALVE COVER/METER BOX TO FG
4. REMOVE EXT CULVERT/DRAINAGE STRUCTURE
5. SAWCUT AND/OR MATCH EXT CURB AND/OR S/W.
6. RELOCATE EXIST MAILBOX TO STA LISTED. (TYPE 1, UNLESS OTHERWISE NOTED)

UNADJUSTED EARTHWORK QUANTITIES

EXCAVATION	
EMBANKMENT	

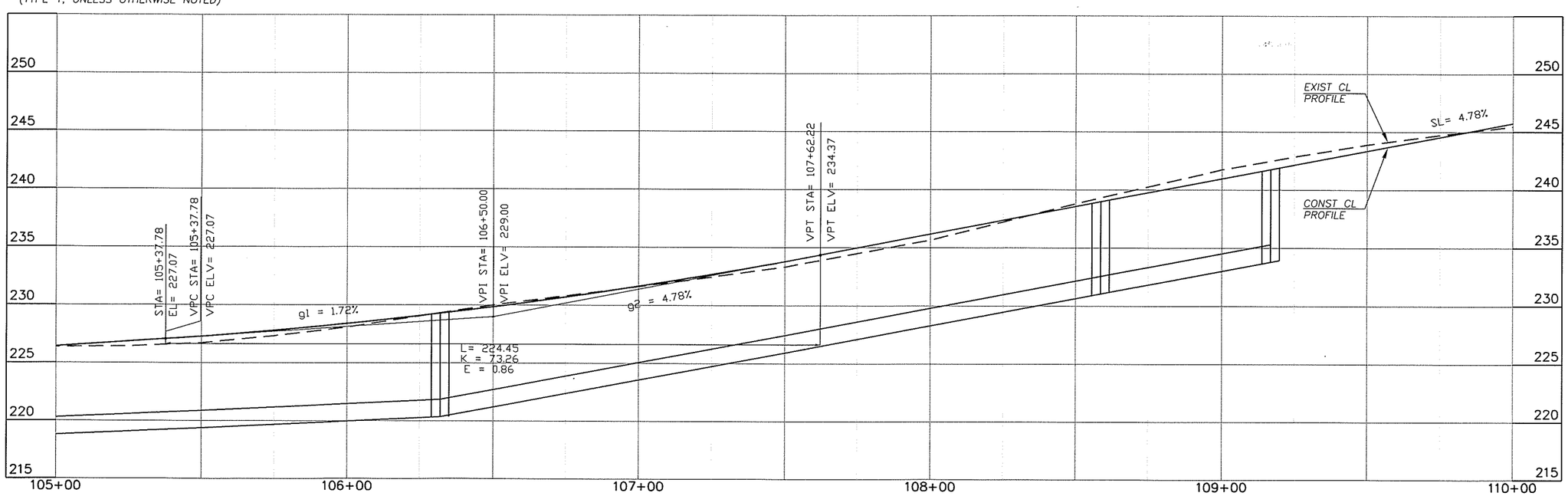

DESIGNED	BK/JM
DRAWN	KB/RK
CRP	340622
HOR.	SEE SHEET
VERT.	SEE SHEET
DATE	10/31/05
DWG:	PP12
SHEET	X OF X

CALL 48 HOURS BEFORE YOU DIG 1-800-553-4344 "It's the Law" NORTHWEST UTILITIES NOTIFICATION CENTER

STATE OF WASHINGTON 35868 PROFESSIONAL ENGINEER BRUCE A. HUC EXPIRES APRIL 7, 2006

ENGINEERING PROGRAM
DESIGN SECTION

NE 119TH STREET WEST
PLAN & PROFILE (STA 105+00 TO STA 110+00)

proud past, promising future
CLARK COUNTY WASHINGTON

N:\CIP\PROJECTS\340622-NE119thStWest-SalmonCrAve-NE72ndAve\DESIGN\DWGS\PP12.dwg, Layout1, 10/25/2005 5:09:35 PM, beglejyk

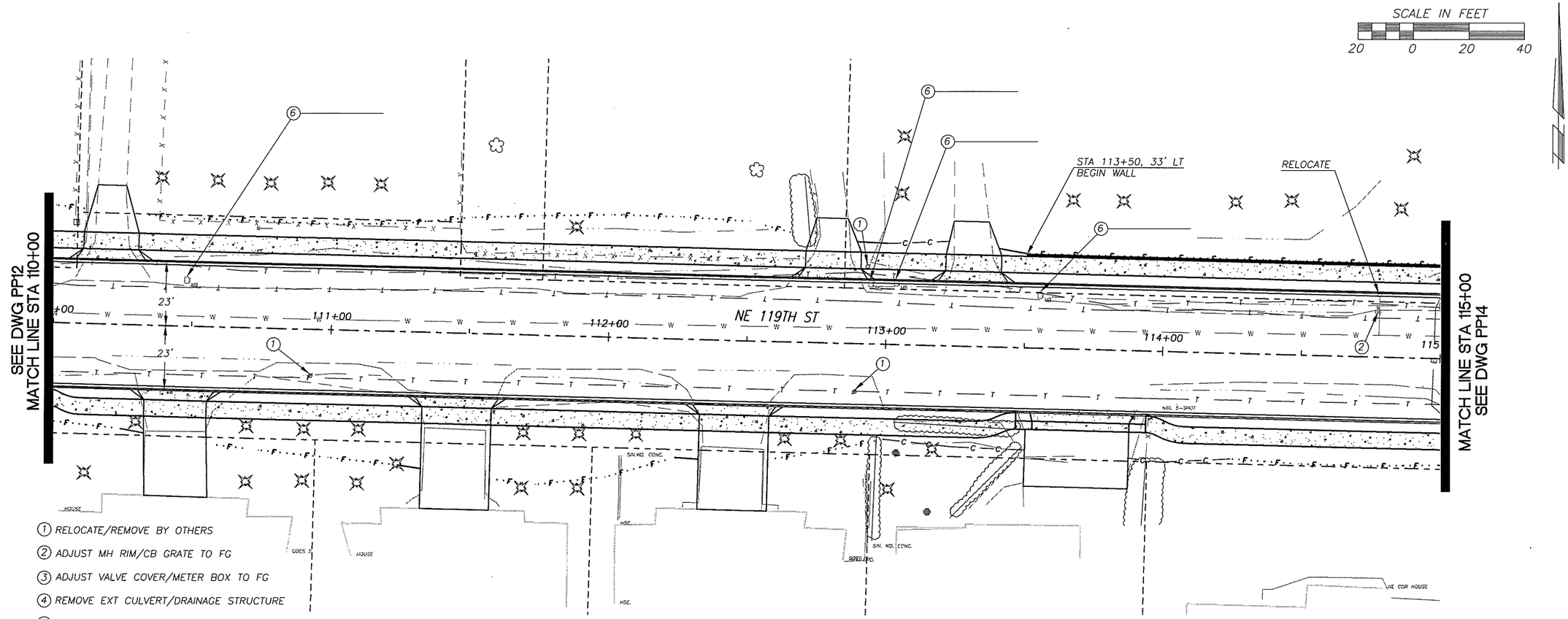

1. RELOCATE/REMOVE BY OTHERS
2. ADJUST MH RIM/CB GRATE TO FG
3. ADJUST VALVE COVER/METER BOX TO FG
4. REMOVE EXT CULVERT/DRAINAGE STRUCTURE
5. SAWCUT AND/OR MATCH EXT CURB AND/OR S/W.
6. RELOCATE EXIST MAILBOX TO STA LISTED. (TYPE 1, UNLESS OTHERWISE NOTED)

UNADJUSTED EARTHWORK QUANTITIES

EXCAVATION	
EMBANKMENT	

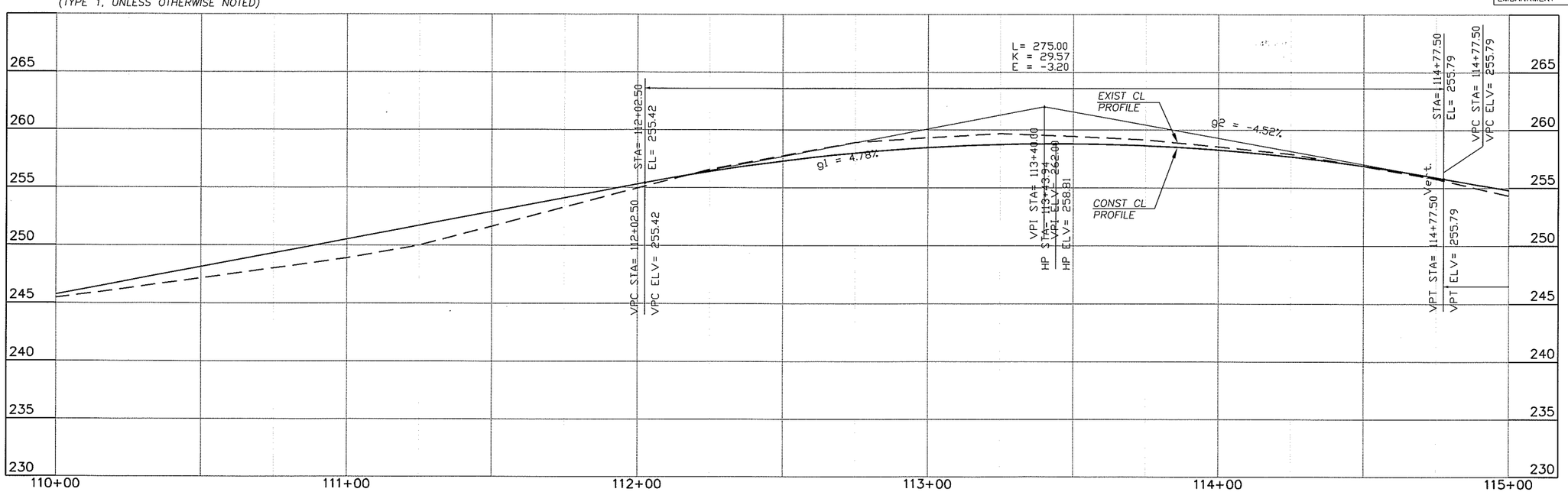

DESIGNED	BK/JM
DRAWN	KB/RK
CRP	340622
HOR.	SEE SHEET
VERT.	SEE SHEET
DATE	10/31/05
DWG:	PP13
SHEET	X OF X

CALL 48 HOURS BEFORE YOU DIG
1-800-553-4344
"It's the Law"
NORTHWEST UTILITIES NOTIFICATION CENTER

BRUCE A. KUG
STATE OF WASHINGTON
38858
REGISTERED PROFESSIONAL ENGINEER
EXPIRES APRIL 7, 2006

ENGINEERING PROGRAM
DESIGN SECTION

NE 119TH STREET WEST
PLAN & PROFILE (STA 110+00 TO STA 115+00)

proud past, promising future
CLARK COUNTY
WASHINGTON

N:\CIP\PROJECTS\340622-NE119thStWest-SalmonCrAve-NE72ndAve\DESIGN\DWGS\PP13.dwg, Layout1, 10/25/2005 5:09:46 PM, begleyk

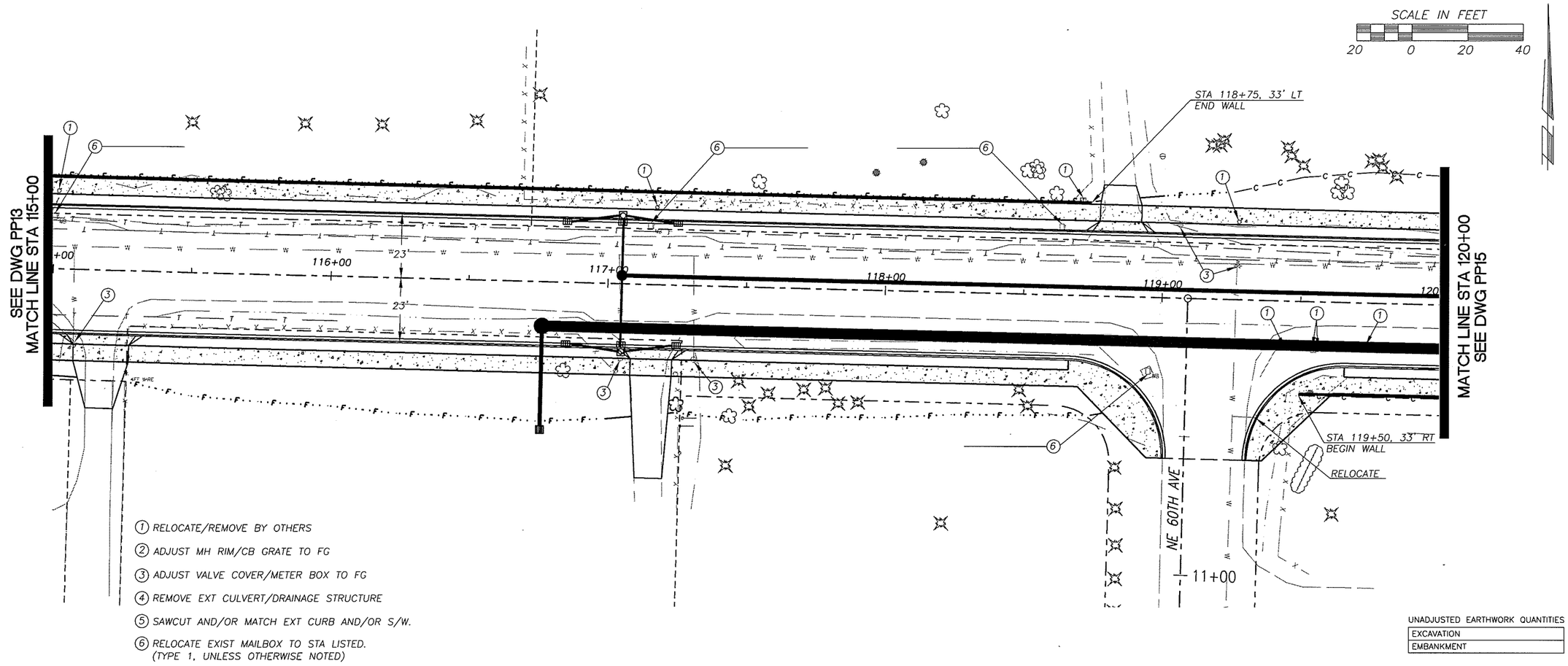

1. RELOCATE/REMOVE BY OTHERS
2. ADJUST MH RIM/CB GRATE TO FG
3. ADJUST VALVE COVER/METER BOX TO FG
4. REMOVE EXT CULVERT/DRAINAGE STRUCTURE
5. SAWCUT AND/OR MATCH EXT CURB AND/OR S/W.
6. RELOCATE EXIST MAILBOX TO STA LISTED. (TYPE 1, UNLESS OTHERWISE NOTED)

UNADJUSTED EARTHWORK QUANTITIES

EXCAVATION	
EMBANKMENT	

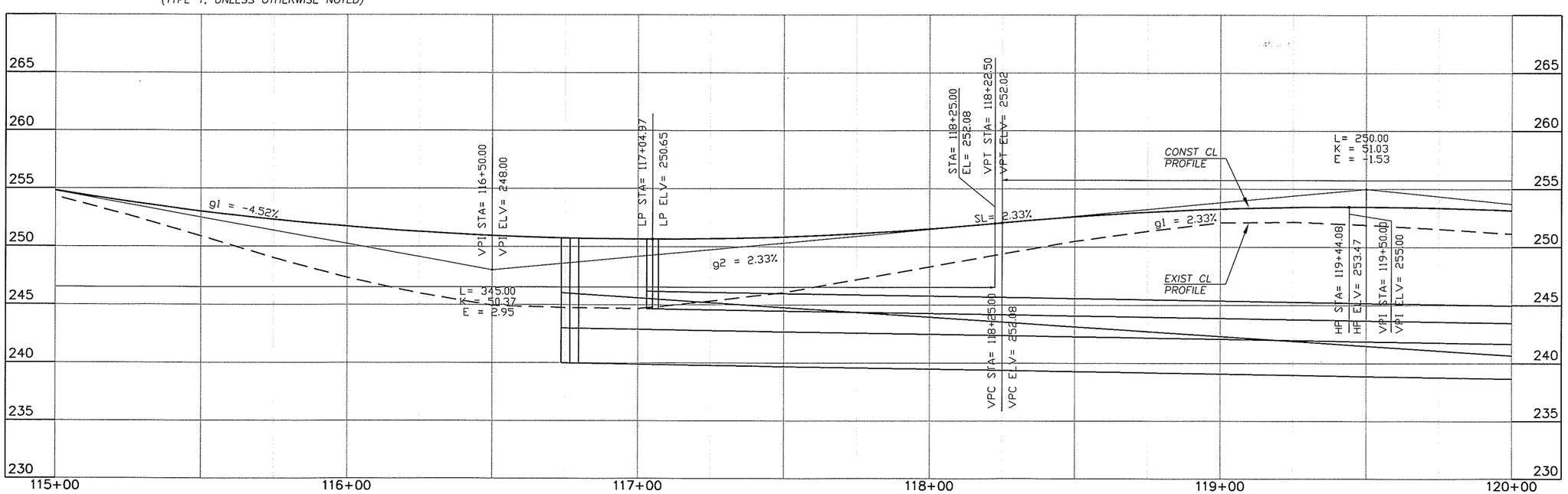

DESIGNED	BK/JM
DRAWN	KB/RK
CRP	340622
HOR.	SEE SHEET
VERT.	SEE SHEET
DATE	10/31/05
DWG:	PP14
SHEET	X OF X

CALL 48 HOURS BEFORE YOU DIG
1-800-553-4344
"It's the Law"
NORTHWEST UTILITIES NOTIFICATION CENTER

STATE OF WASHINGTON
BRUCE A. KLUG
20685
PROFESSIONAL ENGINEER
EXPIRES APRIL 7, 2006

ENGINEERING PROGRAM
DESIGN SECTION

NE 119TH STREET WEST

PLAN & PROFILE (STA 115+00 TO STA 120+00)

proud past, promising future

CLARK COUNTY
WASHINGTON

N:\CIP\PROJECTS\340622-NE119thStWest-SalmonCrAve-NE72ndAve\DESIGN\DWGS\PP14.dwg, Layout1, 10/25/2005 5:09:57 PM, beglerykk

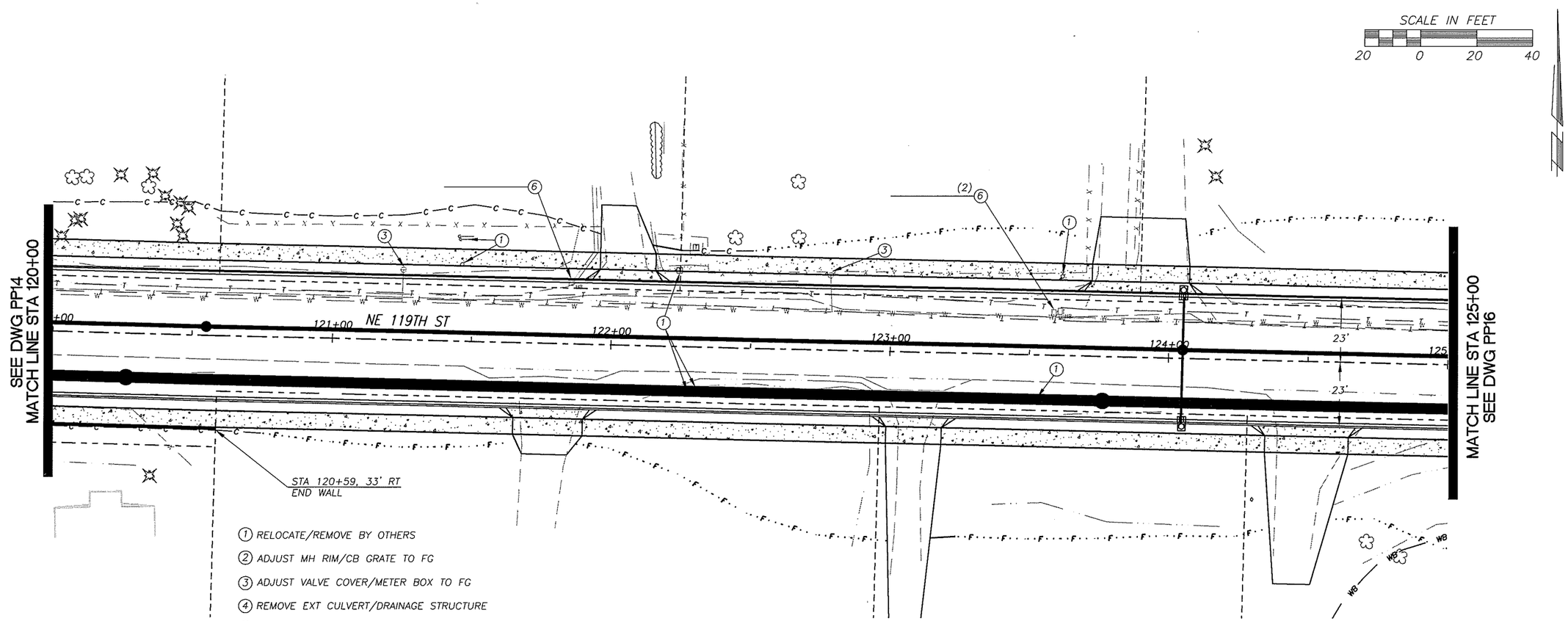

1. RELOCATE/REMOVE BY OTHERS
2. ADJUST MH RIM/CB GRATE TO FG
3. ADJUST VALVE COVER/METER BOX TO FG
4. REMOVE EXT CULVERT/DRAINAGE STRUCTURE
5. SAWCUT AND/OR MATCH EXT CURB AND/OR S/W.
6. RELOCATE EXIST MAILBOX TO STA LISTED. (TYPE 1, UNLESS OTHERWISE NOTED)

UNADJUSTED EARTHWORK QUANTITIES

EXCAVATION
EMBANKMENT

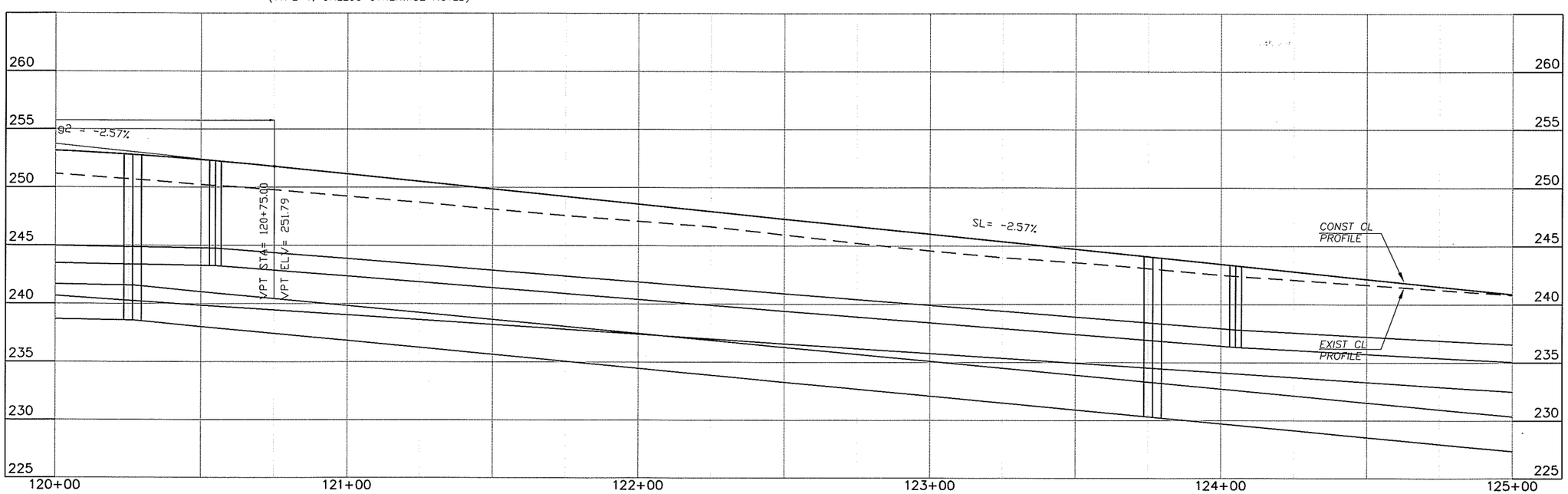

DESIGNED	BK/JM
DRAWN	KB/RK
CRP	340622
HOR.	SEE SHEET
VERT.	SEE SHEET
DATE	10/31/05
DWG:	PP15
SHEET	X OF X

CALL 48 HOURS BEFORE YOU DIG
1-800-553-4344
"It's the Law"
NORTHWEST UTILITIES NOTIFICATION CENTER

STATE OF WASHINGTON
BRUCE A. KILLIG
REGISTERED PROFESSIONAL ENGINEER
EXPIRES APRIL 7, 2006

ENGINEERING PROGRAM DESIGN SECTION

NE 119TH STREET WEST

PLAN & PROFILE (STA 120+00 TO STA 125+00)

proud past, promising future

CLARK COUNTY
WASHINGTON

N:\CIP\PROJECTS\340622-NE119thStWest-SalmonCrAve-NE72ndAve\DESIGN\DWGS\PP15.dwg, Layout1, 10/25/2005 5:10:08 PM, begleyk

1. RELOCATE/REMOVE BY OTHERS
2. ADJUST MH RIM/CB GRATE TO FG
3. ADJUST VALVE COVER/METER BOX TO FG
4. REMOVE EXT CULVERT/DRAINAGE STRUCTURE
5. SAWCUT AND/OR MATCH EXT CURB AND/OR S/W.
6. RELOCATE EXIST MAILBOX TO STA LISTED. (TYPE 1, UNLESS OTHERWISE NOTED)

SCALE IN FEET
20 0 20 40

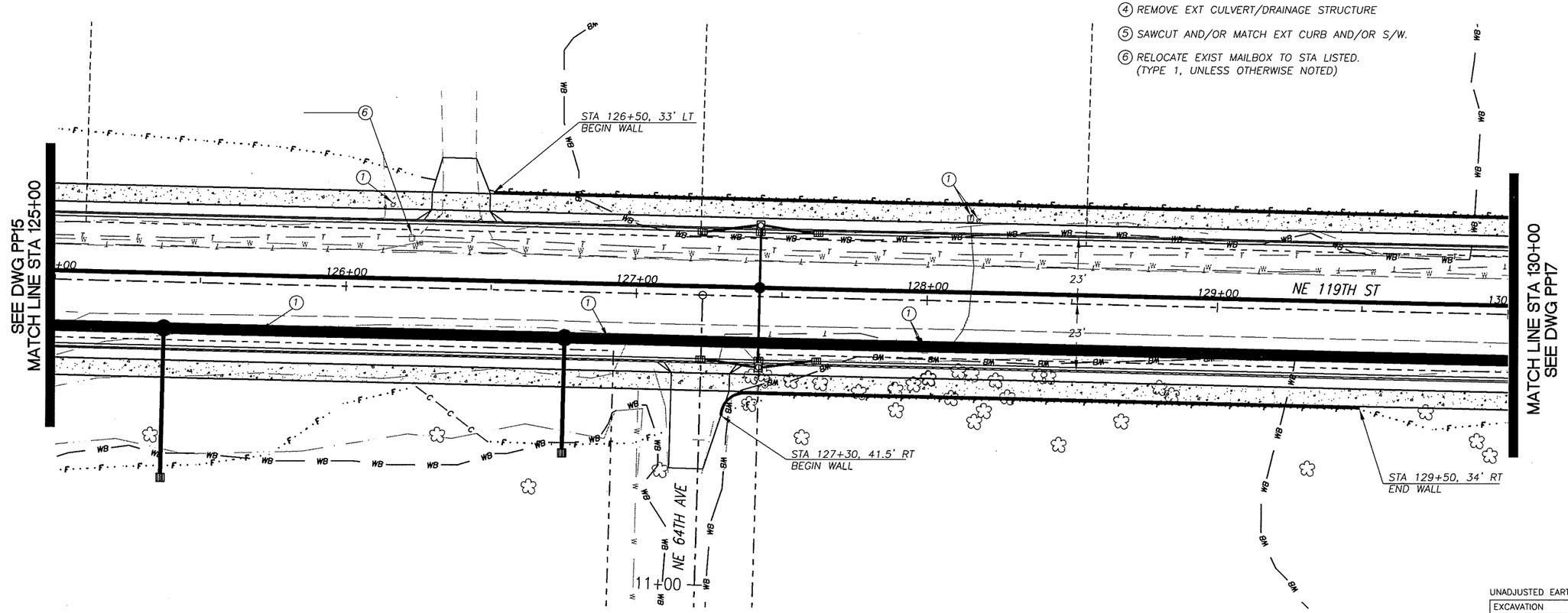

UNADJUSTED EARTHWORK QUANTITIES

EXCAVATION	
EMBANKMENT	

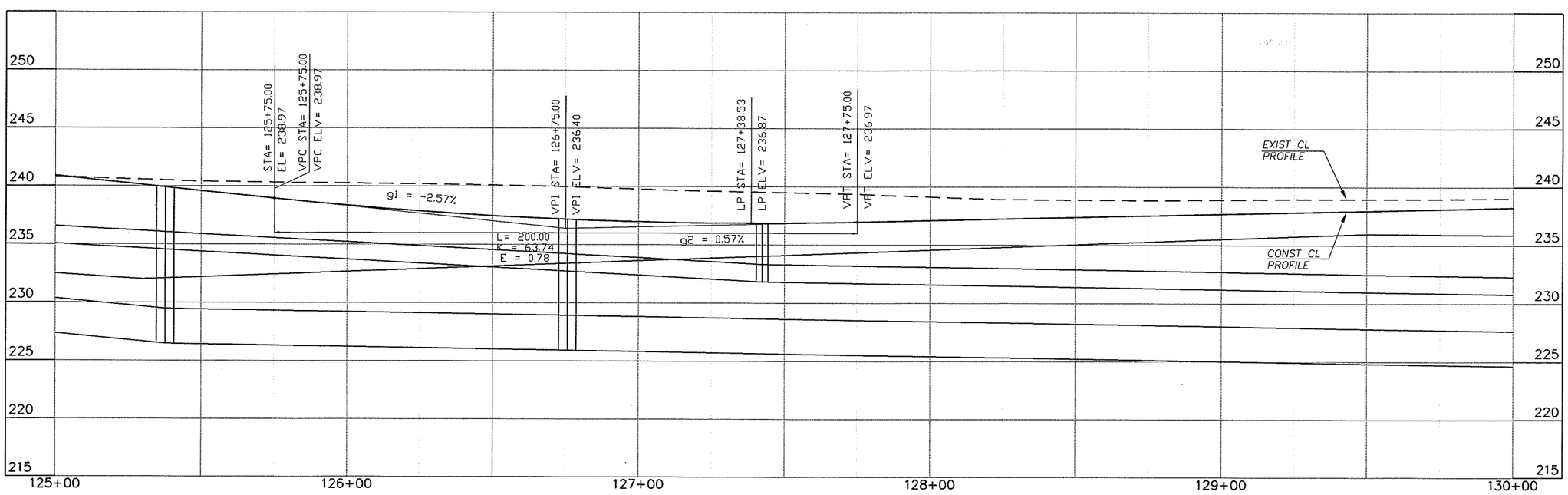

DESIGNED	BK/JM
DRAWN	KB/RK
CRP	340622
HOR.	SEE SHEET
VERT.	SEE SHEET
DATE	10/31/05
DWG:	PP16
SHEET	X OF X

CALL 48 HOURS BEFORE YOU DIG
1-800-553-4344
"It's the Law"
NORTHWEST UTILITIES NOTIFICATION CENTER

STATE OF WASHINGTON
BRUCE A. KILLIG
EXPIRES APRIL 7, 2006

ENGINEERING PROGRAM
DESIGN SECTION

NE 119TH STREET WEST
PLAN & PROFILE (STA 125+00 TO STA 130+00)

proud past, promising future
CLARK COUNTY
WASHINGTON

N:\CIP\PROJECTS\340622-NE119thStWest-SalmonCrAve-NE72ndAve\DESIGN\DWGS\PP16.dwg, Layout1, 10/25/2005 5:10:19 PM, begleyk

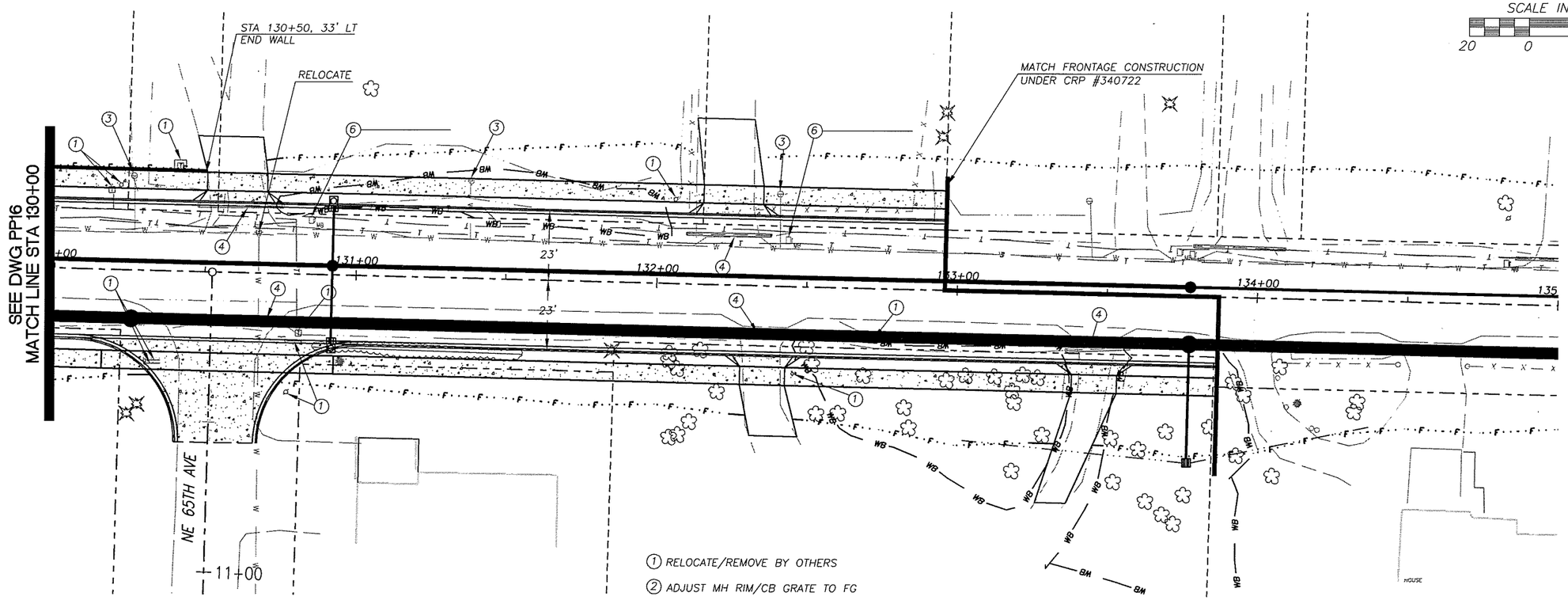

1. RELOCATE/REMOVE BY OTHERS
2. ADJUST MH RIM/CB GRATE TO FG
3. ADJUST VALVE COVER/METER BOX TO FG
4. REMOVE EXT CULVERT/DRAINAGE STRUCTURE
5. SAWCUT AND/OR MATCH EXT CURB AND/OR S/W.
6. RELOCATE EXIST MAILBOX TO STA LISTED. (TYPE 1, UNLESS OTHERWISE NOTED)

UNADJUSTED EARTHWORK QUANTITIES

EXCAVATION
EMBANKMENT

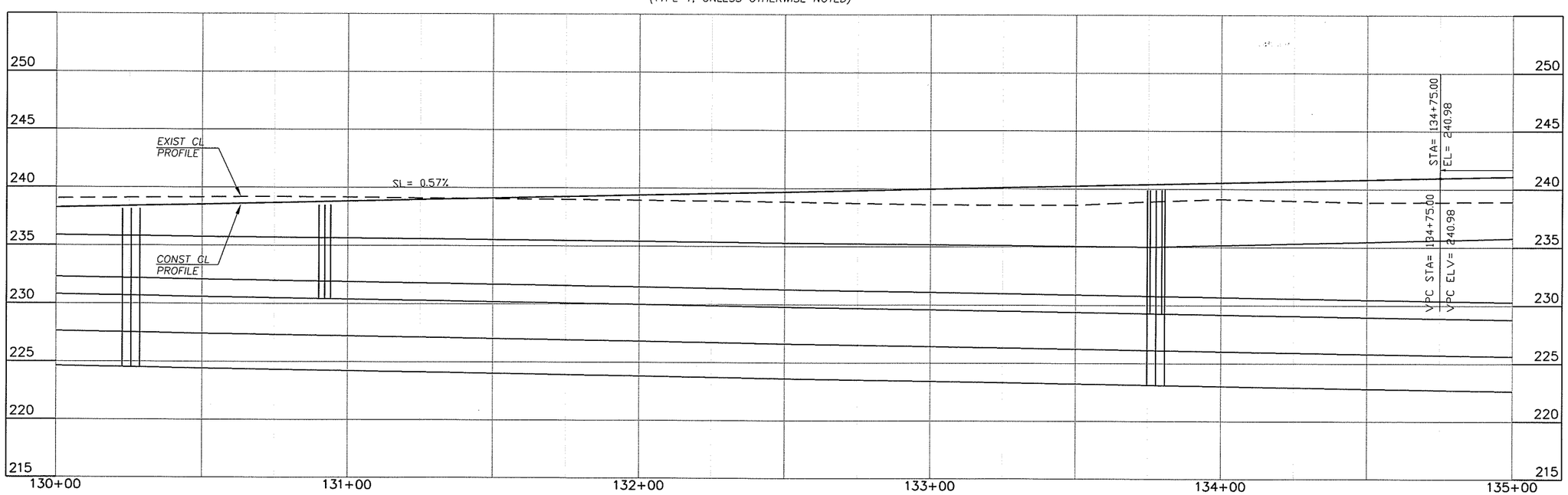

DESIGNED BK/JM
DRAWN KB/RK
CRP 340622
HOR. SEE SHEET
VERT. SEE SHEET
DATE 10/31/05
DWG: PP17
SHEET X OF X

CALL 48 HOURS BEFORE YOU DIG
1-800-553-4344
"It's the Law"
NORTHWEST UTILITIES NOTIFICATION CENTER

STATE OF WASHINGTON
BLAKE A. KLOC
30886
REGISTERED PROFESSIONAL ENGINEER
EXPIRES APRIL 7, 2006

ENGINEERING PROGRAM
DESIGN SECTION

NE 119TH STREET WEST
PLAN & PROFILE (STA 130+00 TO STA 135+00)

proud past, promising future
CLARK COUNTY
WASHINGTON

N:\CIP\PROJECTS\340622-NE119thStWest-SalmonCrAve-NE72ndAve\DESIGN\DWGS\PP17.dwg, Layout1, 10/25/2005 5:10:30 PM, begleyk

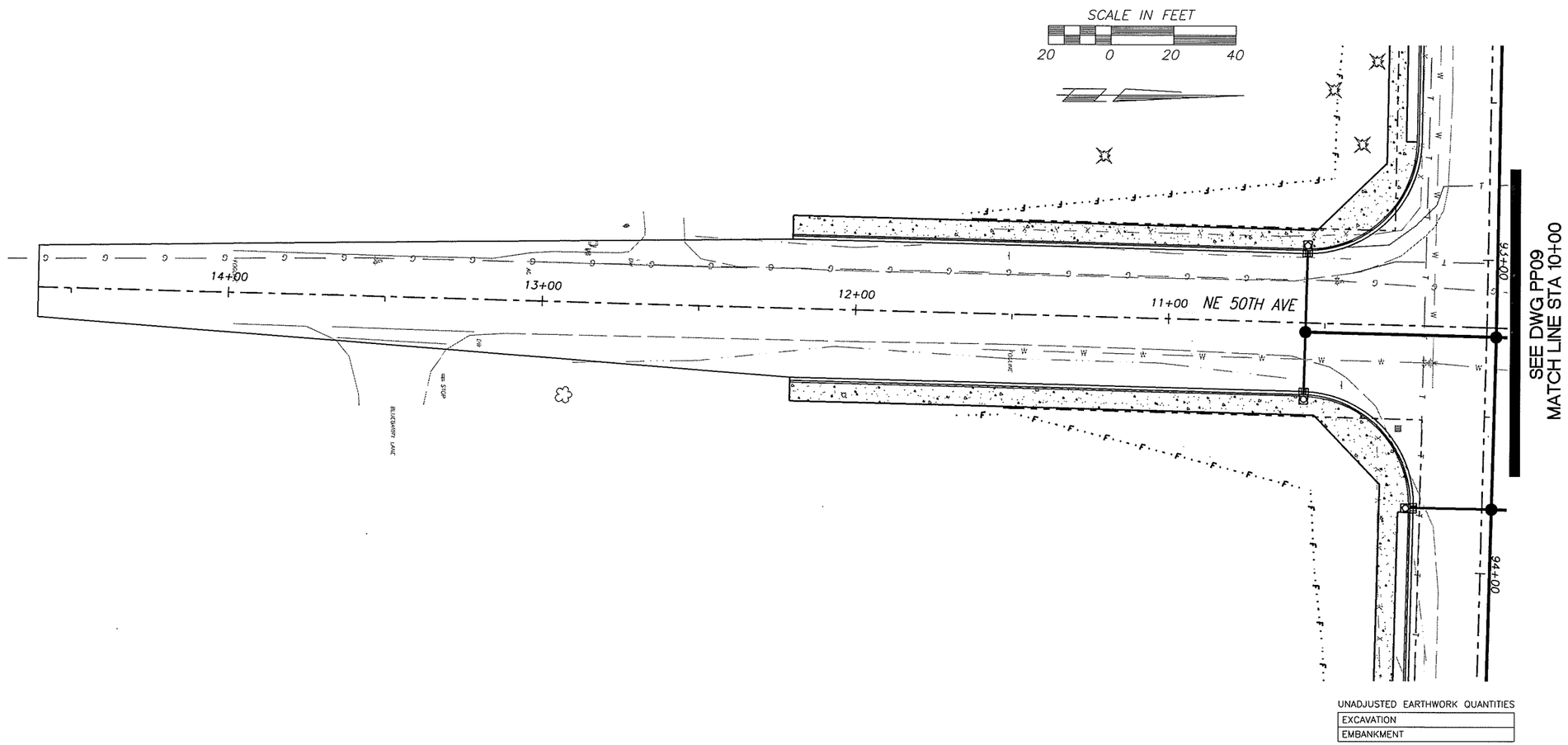

UNADJUSTED EARTHWORK QUANTITIES

EXCAVATION	
EMBANKMENT	

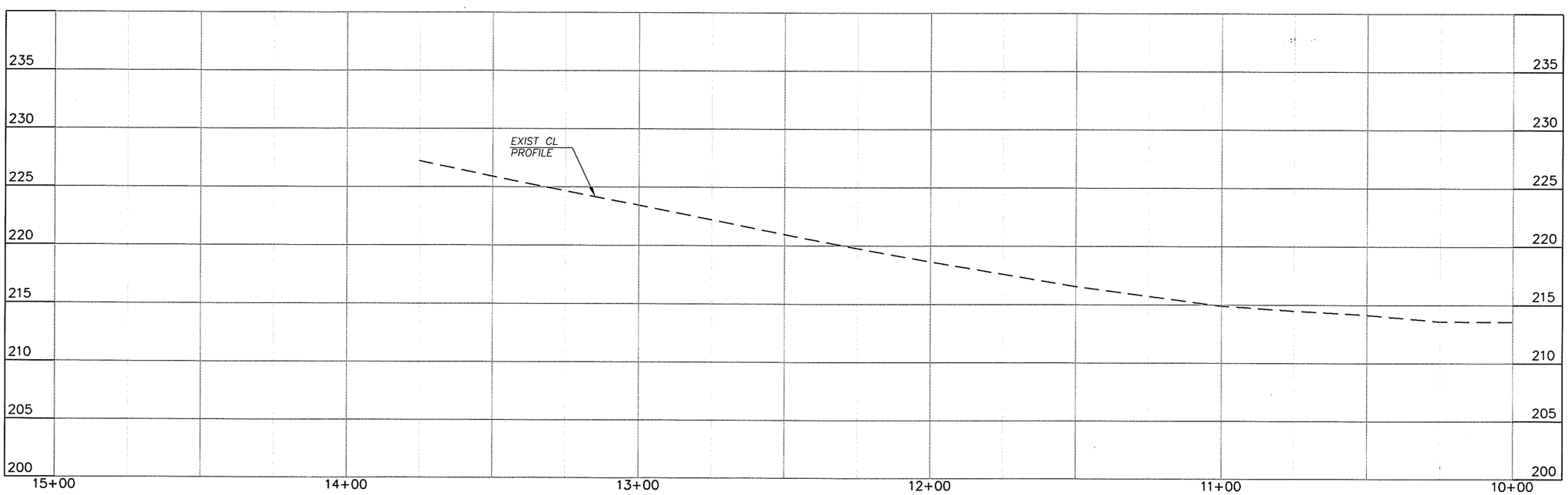

DESIGNED	BK/JM
DRAWN	KB/RK
CRP	340622
HOR.	SEE SHEET
VERT.	SEE SHEET
DATE	10/31/05
DWG:	PP18
SHEET	X OF X

CALL 48 HOURS BEFORE YOU DIG
1-800-553-4344
"It's the Law"
NORTHWEST UTILITIES NOTIFICATION CENTER

STATE OF WASHINGTON
BRYCE A. KLUG
STATE OF WASHINGTON
PROFESSIONAL ENGINEER
EXPIRES APRIL 7, 2006

ENGINEERING PROGRAM
DESIGN SECTION

NE 119TH STREET WEST
PLAN & PROFILE (NE 50TH AVENUE-SOUTH)

proud past, promising future
CLARK COUNTY
WASHINGTON

N:\CIP\PROJECTS\340622-NE119thStWest-SalmonCrAve-NE72ndAve\DESIGN\DWGS\PP18-19.dwg, Layout1, 10/26/2005 11:50:01 AM, begleyk

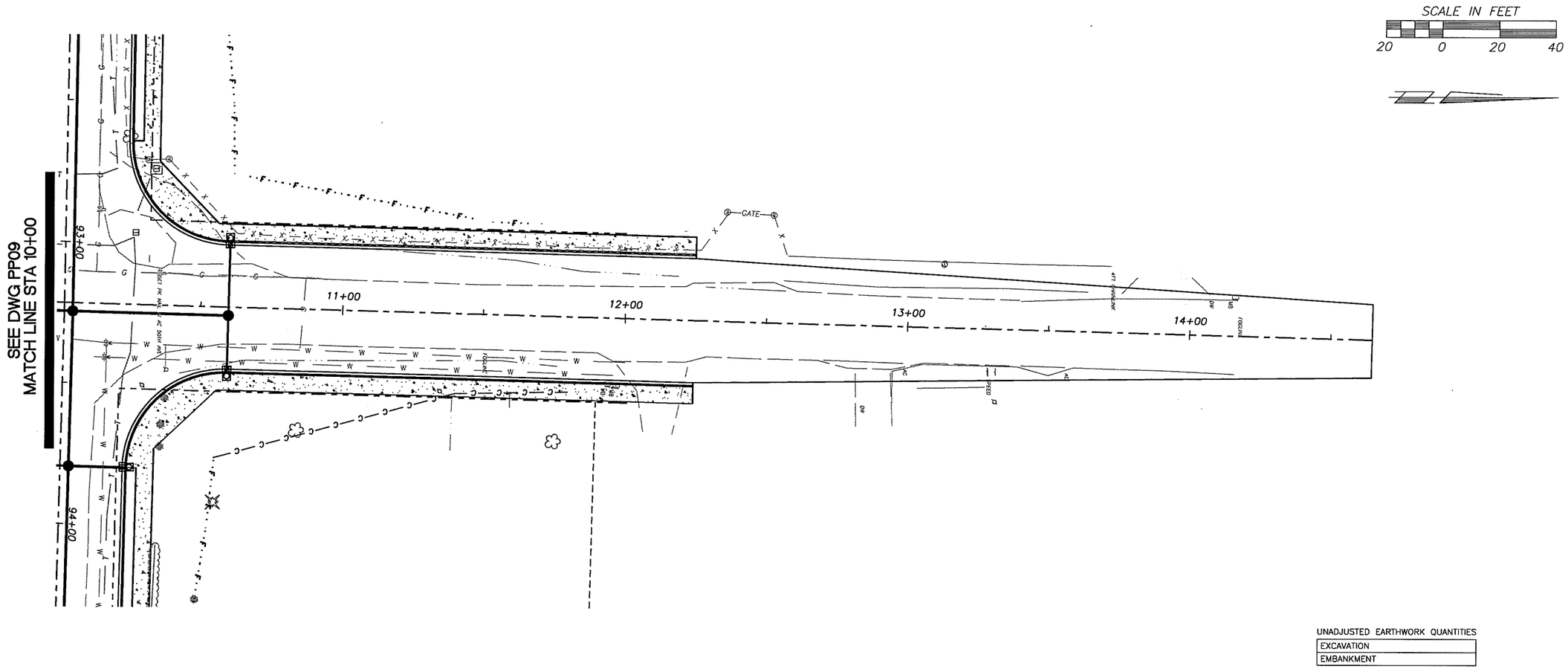

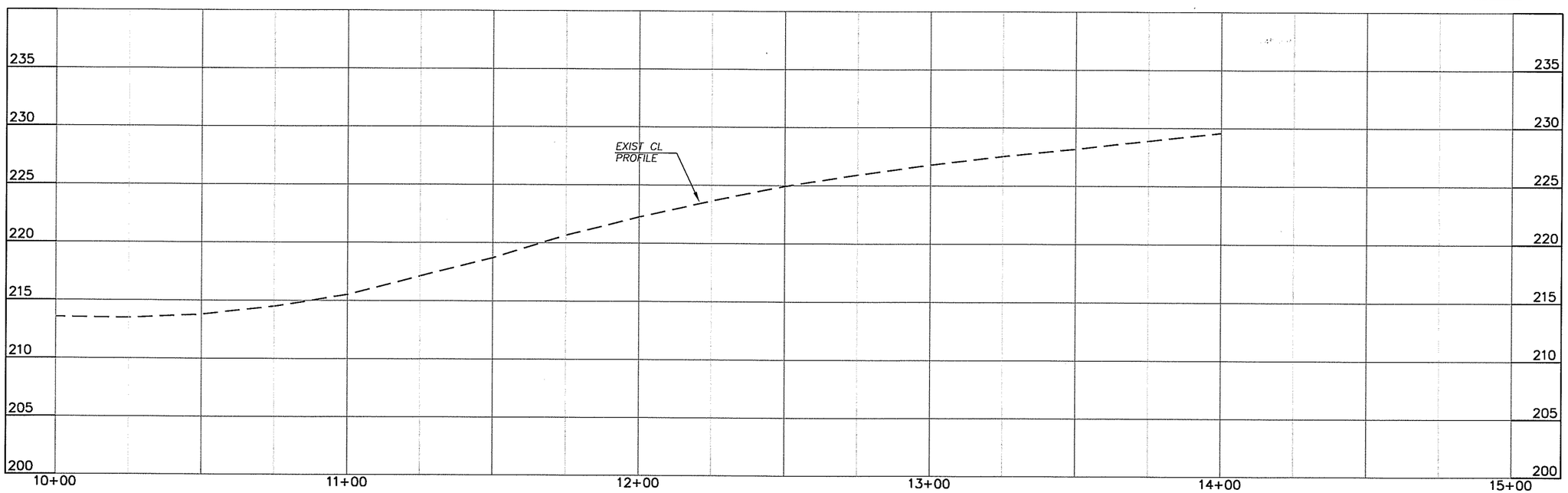

DESIGNED BK/JM
DRAWN KB/RK
CRP 340622
HOR. SEE SHEET
VERT. SEE SHEET
DATE 10/31/05
DWG: PP19
SHEET X OF X

CALL 48 HOURS BEFORE YOU DIG
1-800-553-4344
"It's the Law"
NORTHWEST UTILITIES NOTIFICATION CENTER

STATE OF WASHINGTON
BRYAN A. KLUG
REGISTERED PROFESSIONAL ENGINEER
EXPIRES APRIL 1, 2006

ENGINEERING PROGRAM
DESIGN SECTION

NE 119TH STREET WEST
PLAN & PROFILE (NE 50TH AVENUE–NORTH)

proud past, promising future
CLARK COUNTY
WASHINGTON

N:\CIP\PROJECTS\340622-NE119thStWest-SalmonCrAve-NE72ndAve\DESIGN\DWGS\PP18-19.dwg, Layout1 (2), 10/26/2005 11:50:23 AM, begleyk

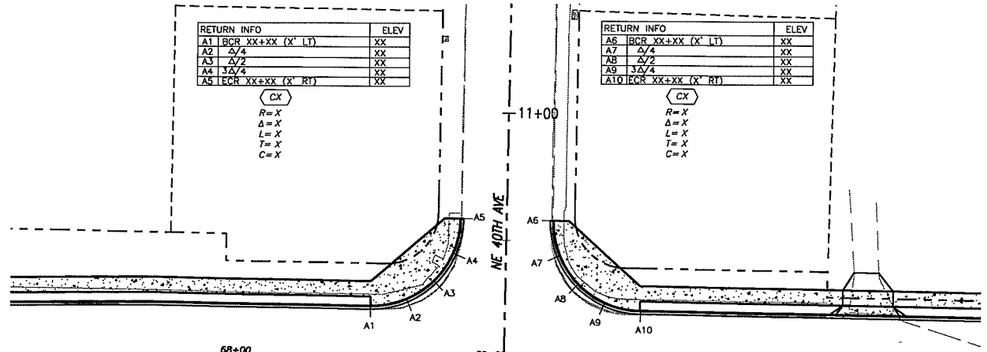

RETURN INFO		ELEV
A1	BCR XX+XX (X' LT)	XX
A2	Δ/4	XX
A3	Δ/2	XX
A4	3Δ/4	XX
A5	ECR XX+XX (X' RT)	XX

CX
R=X
Δ=X
L=X
T=X
C=X

RETURN INFO		ELEV
A6	BCR XX+XX (X' LT)	XX
A7	Δ/4	XX
A8	Δ/2	XX
A9	3Δ/4	XX
A10	ECR XX+XX (X' RT)	XX

CX
R=X
Δ=X
L=X
T=X
C=X

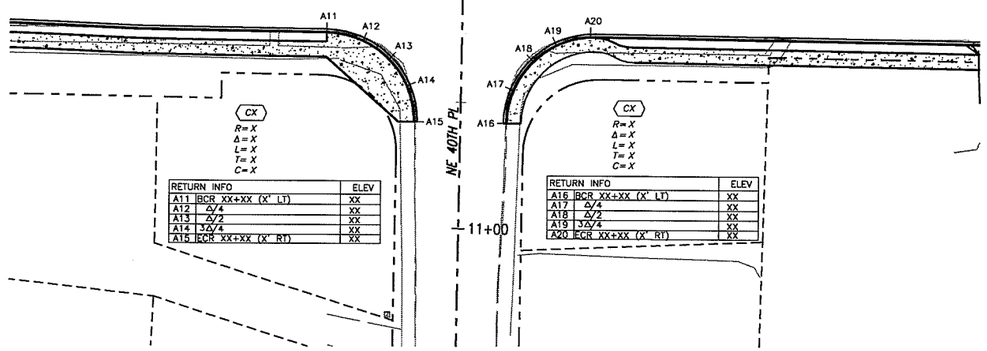

CX
R=X
Δ=X
L=X
T=X
C=X

RETURN INFO		ELEV
A11	BCR XX+XX (X' LT)	XX
A12	Δ/4	XX
A13	Δ/2	XX
A14	3Δ/4	XX
A15	ECR XX+XX (X' RT)	XX

CX
R=X
Δ=X
L=X
T=X
C=X

RETURN INFO		ELEV
A16	BCR XX+XX (X' LT)	XX
A17	Δ/4	XX
A18	Δ/2	XX
A19	3Δ/4	XX
A20	ECR XX+XX (X' RT)	XX

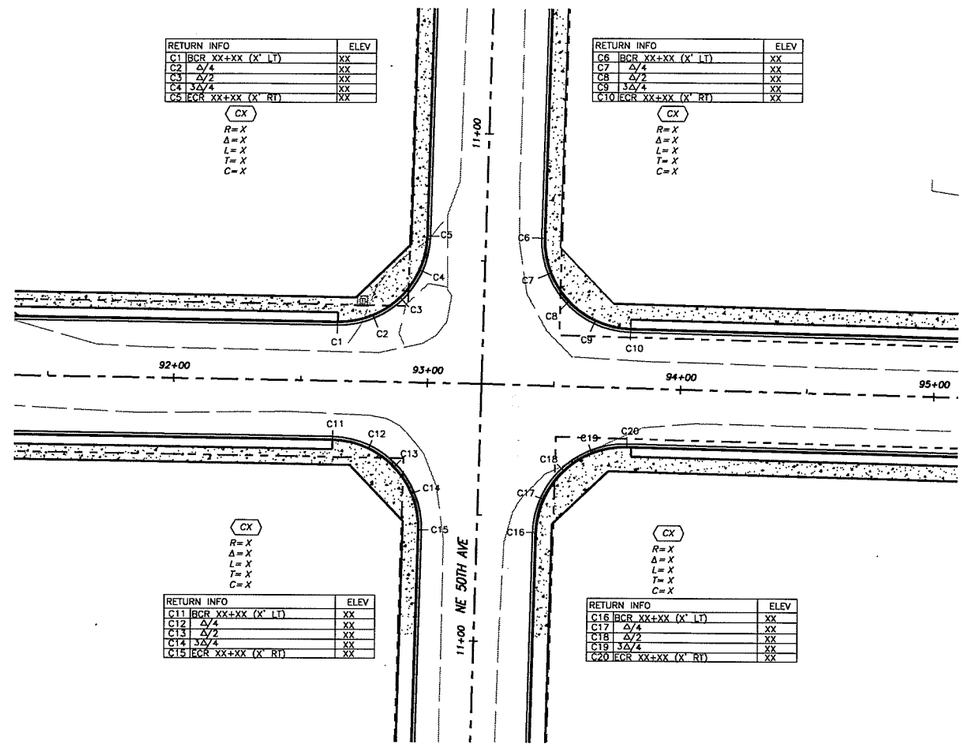

CX
R=X
Δ=X
L=X
T=X
C=X

RETURN INFO		ELEV
C1	BCR XX+XX (X' LT)	XX
C2	Δ/4	XX
C3	Δ/2	XX
C4	3Δ/4	XX
C5	ECR XX+XX (X' RT)	XX

CX
R=X
Δ=X
L=X
T=X
C=X

RETURN INFO		ELEV
C6	BCR XX+XX (X' LT)	XX
C7	Δ/4	XX
C8	Δ/2	XX
C9	3Δ/4	XX
C10	ECR XX+XX (X' RT)	XX

CX
R=X
Δ=X
L=X
T=X
C=X

RETURN INFO		ELEV
C11	BCR XX+XX (X' LT)	XX
C12	Δ/4	XX
C13	Δ/2	XX
C14	3Δ/4	XX
C15	ECR XX+XX (X' RT)	XX

CX
R=X
Δ=X
L=X
T=X
C=X

RETURN INFO		ELEV
C16	BCR XX+XX (X' LT)	XX
C17	Δ/4	XX
C18	Δ/2	XX
C19	3Δ/4	XX
C20	ECR XX+XX (X' RT)	XX

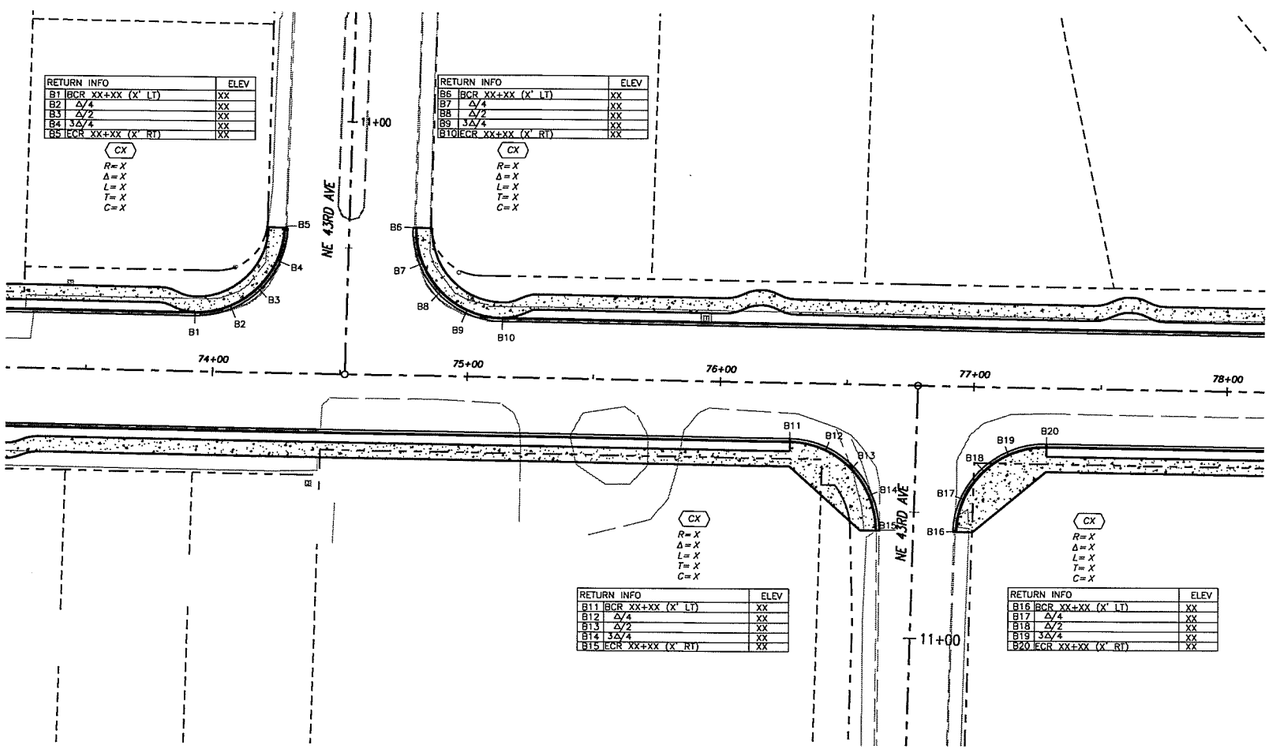

CX
R=X
Δ=X
L=X
T=X
C=X

RETURN INFO		ELEV
B1	BCR XX+XX (X' LT)	XX
B2	Δ/4	XX
B3	Δ/2	XX
B4	3Δ/4	XX
B5	ECR XX+XX (X' RT)	XX

CX
R=X
Δ=X
L=X
T=X
C=X

RETURN INFO		ELEV
B6	BCR XX+XX (X' LT)	XX
B7	Δ/4	XX
B8	Δ/2	XX
B9	3Δ/4	XX
B10	ECR XX+XX (X' RT)	XX

CX
R=X
Δ=X
L=X
T=X
C=X

RETURN INFO		ELEV
B11	BCR XX+XX (X' LT)	XX
B12	Δ/4	XX
B13	Δ/2	XX
B14	3Δ/4	XX
B15	ECR XX+XX (X' RT)	XX

CX
R=X
Δ=X
L=X
T=X
C=X

RETURN INFO		ELEV
B16	BCR XX+XX (X' LT)	XX
B17	Δ/4	XX
B18	Δ/2	XX
B19	3Δ/4	XX
B20	ECR XX+XX (X' RT)	XX

SCALE IN FEET

30 0 30 30

CL OF RAMPS @ FACE			
#	STATION	OFFSET	TYPE
R1	XX+XX	X' LT	TYPE X
R2	XX+XX	X' LT	TYPE X
R3	XX+XX	X' LT	TYPE X
R4	XX+XX	X' LT	TYPE X
R5	XX+XX	X' LT	TYPE X
R6	XX+XX	X' LT	TYPE X
R7	XX+XX	X' LT	TYPE X
R8	XX+XX	X' LT	TYPE X
R9	XX+XX	X' LT	TYPE X
R10	XX+XX	X' LT	TYPE X
R11	XX+XX	X' LT	TYPE X
R12	XX+XX	X' LT	TYPE X

PRELIMINARY

DESIGNED	BK/JM
DRAWN	KB/RK
CRP	340622
HOR.	SEE SHEET
VERT.	SEE SHEET
DATE	10/31/05
DWG:	101
SHEET	X OF X

CALL 48 HOURS BEFORE YOU DIG 1-800-553-4344 "It's the Law" NORTHWEST UTILITIES NOTIFICATION CENTER

STATE OF WASHINGTON BRUCE A. KILLMER 37868 REGISTERED PROFESSIONAL ENGINEER EXPIRES APRIL 7, 2006

ENGINEERING PROGRAM
DESIGN SECTION

NE 119TH STREET WEST
INTERSECTION PLAN

proud past, promising future
CLARK COUNTY WASHINGTON

N:\CIP\PROJECTS\340622-NE119thStWest-SalmonCrAve-NE72ndAve\DESIGN\DWGS\101-2.dwg, Layout1, 10/27/2005 9:54:28 AM, begleyk

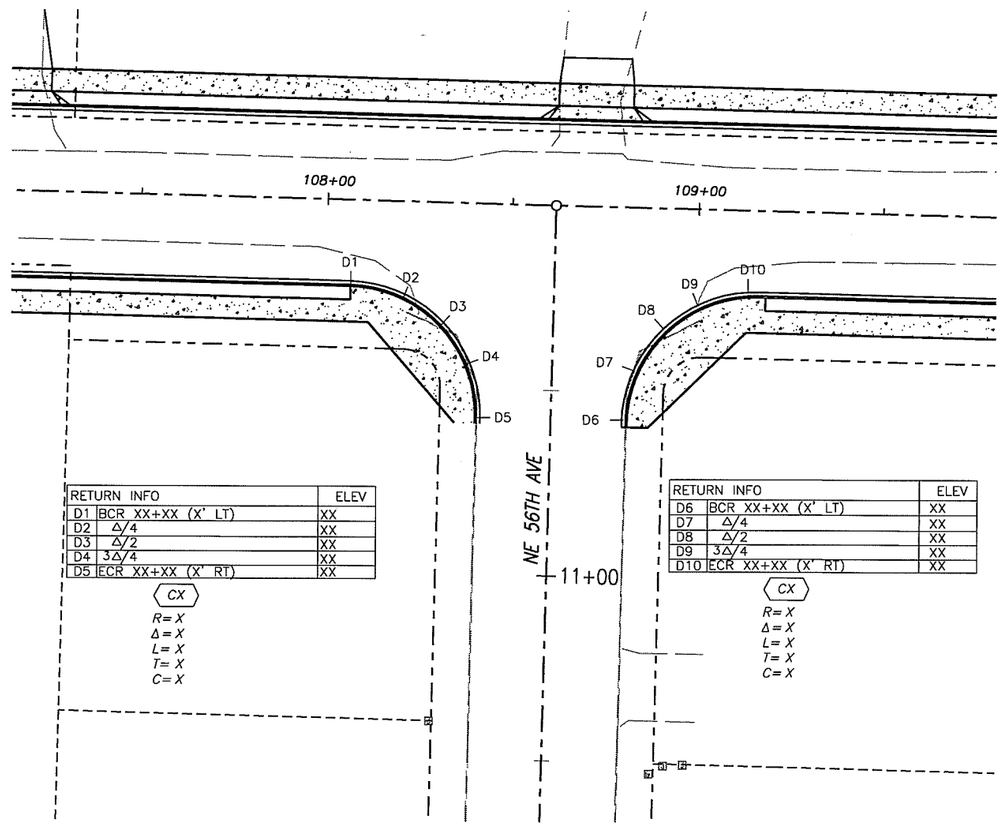

RETURN INFO		ELEV
D1	BCR XX+XX (X' LT)	XX
D2	Δ/4	XX
D3	Δ/2	XX
D4	3Δ/4	XX
D5	ECR XX+XX (X' RT)	XX

CX

R= X
Δ = X
L= X
T= X
C= X

RETURN INFO		ELEV
D6	BCR XX+XX (X' LT)	XX
D7	Δ/4	XX
D8	Δ/2	XX
D9	3Δ/4	XX
D10	ECR XX+XX (X' RT)	XX

CX

R= X
Δ = X
L= X
T= X
C= X

SCALE IN FEET

30 0 30 60

CL OF RAMPS @ FACE			
#	STATION	OFFSET	TYPE
R1	XX+XX	X' LT	TYPE X
R2	XX+XX	X' LT	TYPE X
R3	XX+XX	X' LT	TYPE X
R4	XX+XX	X' LT	TYPE X
R5	XX+XX	X' LT	TYPE X
R6	XX+XX	X' LT	TYPE X
R7	XX+XX	X' LT	TYPE X
R8	XX+XX	X' LT	TYPE X
R9	XX+XX	X' LT	TYPE X
R10	XX+XX	X' LT	TYPE X
R11	XX+XX	X' LT	TYPE X
R12	XX+XX	X' LT	TYPE X

PRELIMINARY

DESIGNED	BK/JM
DRAWN	KB/RK
CRP	340622
HOR.	SEE SHEET
VERT.	SEE SHEET
DATE	10/31/05
DWG:	102
SHEET X	OF X

CALL 48 HOURS BEFORE YOU DIG
1-800-553-4344
"It's the Law"
NORTHWEST UTILITIES NOTIFICATION CENTER

STATE OF WASHINGTON
GEORGE A. KILLE
16868
REGISTERED PROFESSIONAL ENGINEER
EXPIRES APRIL 7, 2006

ENGINEERING PROGRAM
DESIGN SECTION

NE 119TH STREET WEST
INTERSECTION PLAN

proud past, promising future
CLARK COUNTY
WASHINGTON

N:\CIP\PROJECTS\340622-NE119thStWest-SalmonCrAve-NE72ndAve\DESIGN\DWGS\01-2.dwg, Layout1 (2), 10/27/2005 10:01:29 AM, begleyk