CAPITAL IMPROVEMENTS PROGRAM
COUNTY ROAD PROJECT #341322
FEDERAL AID NUMBER 91-1132232
FEDERAL CONTRACT NUMBER _ _-_ _ _

KLINELINE BRIDGE

HIGHWAY 99

BRIDGE REPLACEMENT

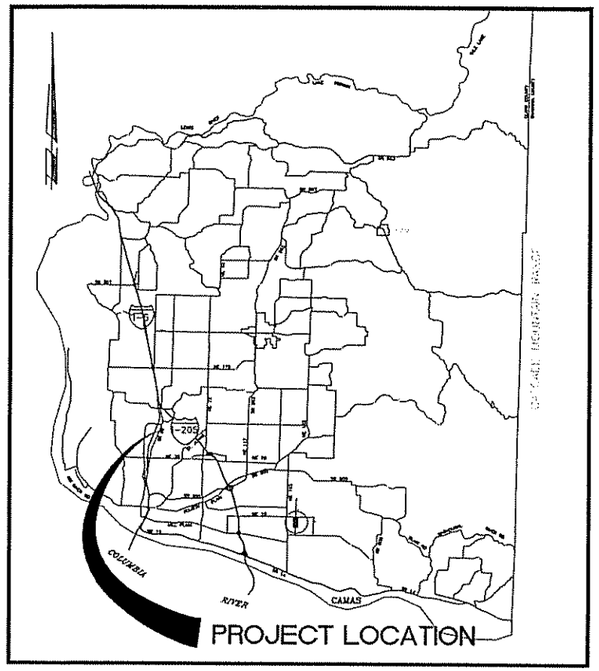

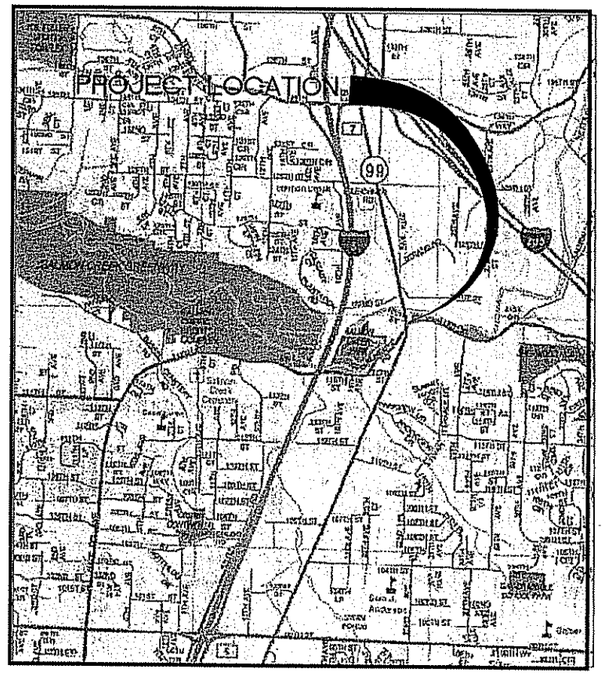

SHEET INDEX

SHEET	1	COVER SHEET
SHEET	2	EROSION CONTROL PLAN
SHEET	3	TYPICAL SECTIONS
SHEET	4	HIGHWAY 99 PLAN AND PROFILE – BOP TO STA. 15+50
SHEET	5	HIGHWAY 99 PLAN AND PROFILE – STA. 15+50 TO STA. 21+00
SHEET	6	HIGHWAY 99 PLAN AND PROFILE – STA. 21+00 TO STA. 26+50
SHEET	7	HIGHWAY 99 PLAN AND PROFILE – STA. 26+50 TO EOP
SHEET	8	LAYOUT PLAN
SHEET	9	FOUNDATION PLAN
SHEET	10	ABUTMENT LAYOUT
SHEET	11	BRIDGE CONSTRUCTION STAGING No. 1
SHEET	12	BRIDGE CONSTRUCTION STAGING No. 2
SHEET	13	BID ALTERNATE
SHEET	14	BID ALTERNATE DETAILS No. 1
SHEET	15	BID ALTERNATE DETAILS No. 2
SHEET	16	STREAM RESTORATION PLAN AND PROFILE
SHEET	17	STREAM RESTORATION TYPICAL SECTIONS
SHEET	18	STREAM RESTORATION DETAILS

COMMISSIONERS:

BETTY SUE MORRIS, Chair
MARC BOLDT, Commissioner
STEVEN J. STUART, Commissioner

30% PLANS

proud past, promising future
CLARK COUNTY
WASHINGTON

DEPARTMENT OF
PUBLIC WORKS

ENGINEERING PROGRAM - DESIGN SECTION

Quality Assurance	Project Manager	Public Works Director/ County Engineer
Heath Henderson, P.E. DATE:	Linda Small DATE:	Peter Capell, P.E. DATE:

KGA
KRAMER GEHLEN ASSOCIATES
Consulting Engineers
Structural/Civil
400 COLUMBIA ST
SUITE 240
VANC WA 98660
360-693-1621
503-289-2661

DOUGLAS L. SARKISIAN, P.E.
STATE OF WASHINGTON
24136
REGISTERED PROFESSIONAL ENGINEER
EXPIRES OCT. 22, 2008

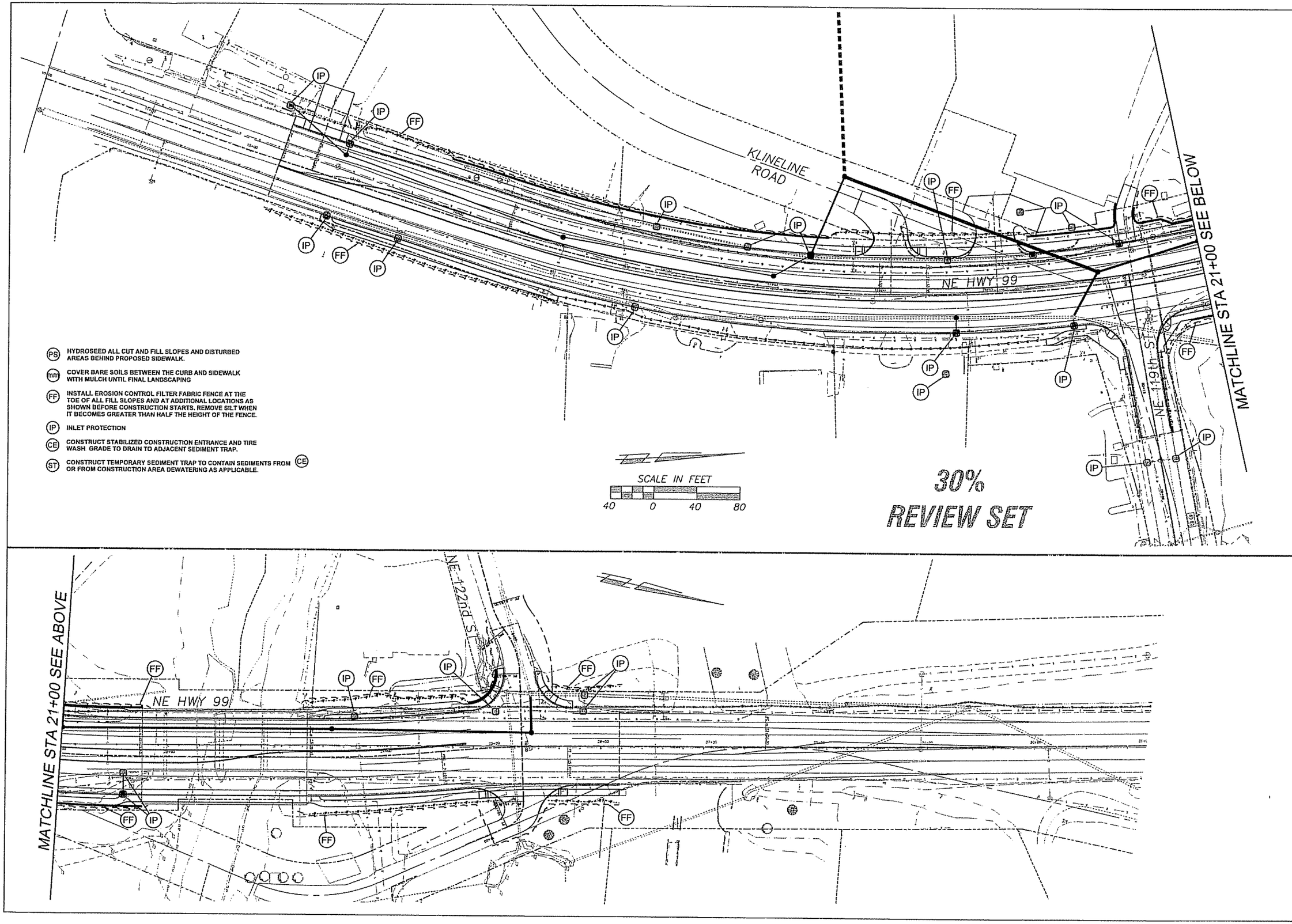

PS HYDROSEED ALL CUT AND FILL SLOPES AND DISTURBED AREAS BEHIND PROPOSED SIDEWALK.

mm COVER BARE SOILS BETWEEN THE CURB AND SIDEWALK WITH MULCH UNTIL FINAL LANDSCAPING

FF INSTALL EROSION CONTROL FILTER FABRIC FENCE AT THE TOE OF ALL FILL SLOPES AND AT ADDITIONAL LOCATIONS AS SHOWN BEFORE CONSTRUCTION STARTS. REMOVE SILT WHEN IT BECOMES GREATER THAN HALF THE HEIGHT OF THE FENCE.

IP INLET PROTECTION

CE CONSTRUCT STABILIZED CONSTRUCTION ENTRANCE AND TIRE WASH. GRADE TO DRAIN TO ADJACENT SEDIMENT TRAP.

ST CONSTRUCT TEMPORARY SEDIMENT TRAP TO CONTAIN SEDIMENTS FROM CE OR FROM CONSTRUCTION AREA DEWATERING AS APPLICABLE.

DESIGNED	DPS
DRAWN	DPS
CRP	341322
HOR.	1"=40'
VERT.	N/A
DATE	OCT 2005
DWG.	EC01
SHEET	OF

CALL 48 HOURS BEFORE YOU DIG
1-800-553-4344
"It's the Law"
NORTHWEST UTILITIES NOTIFICATION CENTER

MICHAEL L. NIEMI
STATE OF WASHINGTON
REGISTERED PROFESSIONAL ENGINEER
EXPIRES: AUG. 10, 2008

DESIGN & ENGINEERING DIVISION
DESIGN SECTION

KLINELINE BRIDGE REPLACEMENT
EROSION CONTROL PLAN

proud past, promising future

CLARK COUNTY
WASHINGTON

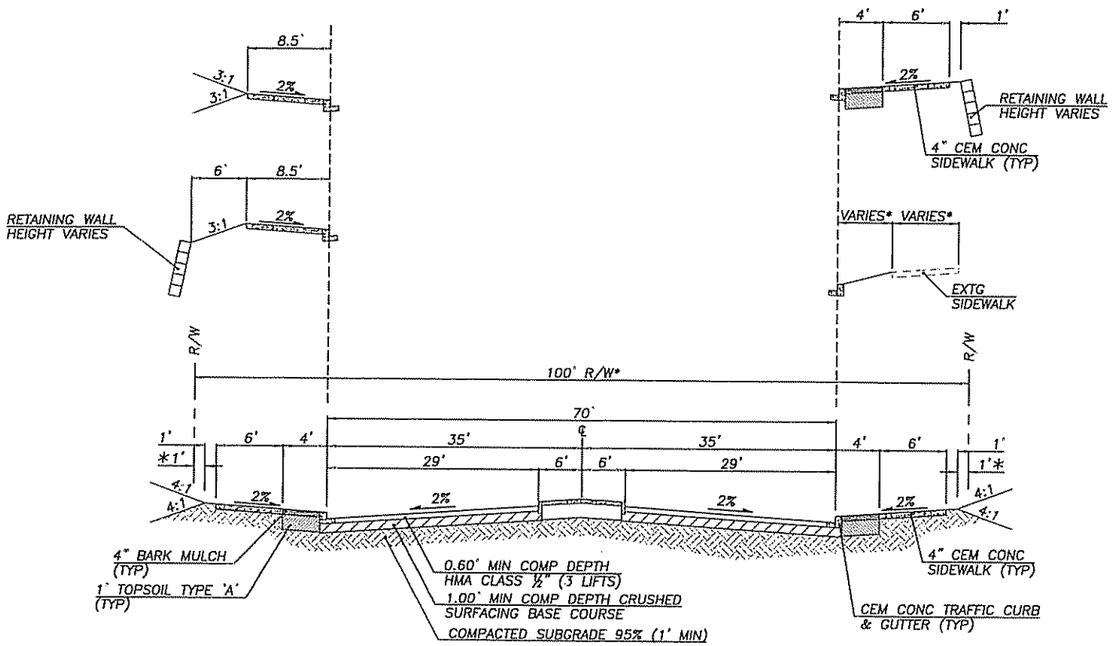

* WIDTH VARIES SEE PLAN

HIGHWAY 99

NTS

STA 12+28.95 to STA 26+14.91

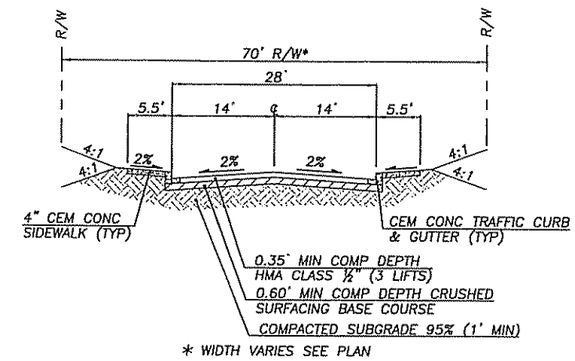

* WIDTH VARIES SEE PLAN

NE 122nd STREET

NTS

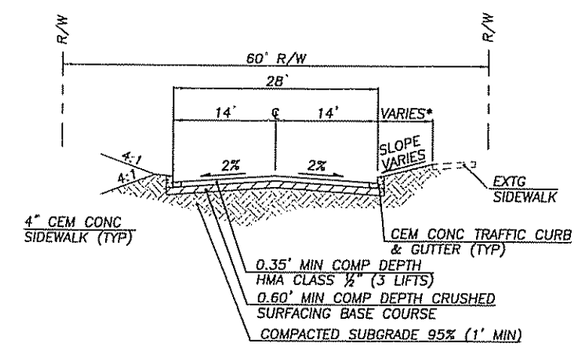

* WIDTH VARIES SEE PLAN

NE 119th STREET

NTS

30%

REVIEW SET

DESIGNED	DPS
DRAWN	DPS
CRP	341322
HOR.	N/A
VERT.	N/A
DATE	OCT 2005
DWG.	TS01
SHEET	OF

CALL 48 HOURS BEFORE YOU DIG
1-800-553-4344
"It's the Law"
NORTHWEST UTILITIES NOTIFICATION CENTER

EXPIRES: AUG. 10, 2006

DESIGN & ENGINEERING DIVISION
DESIGN SECTION

KLINELINE BRIDGE REPLACEMENT
TYPICAL SECTIONS

proud past, promising future

CLARK COUNTY
WASHINGTON

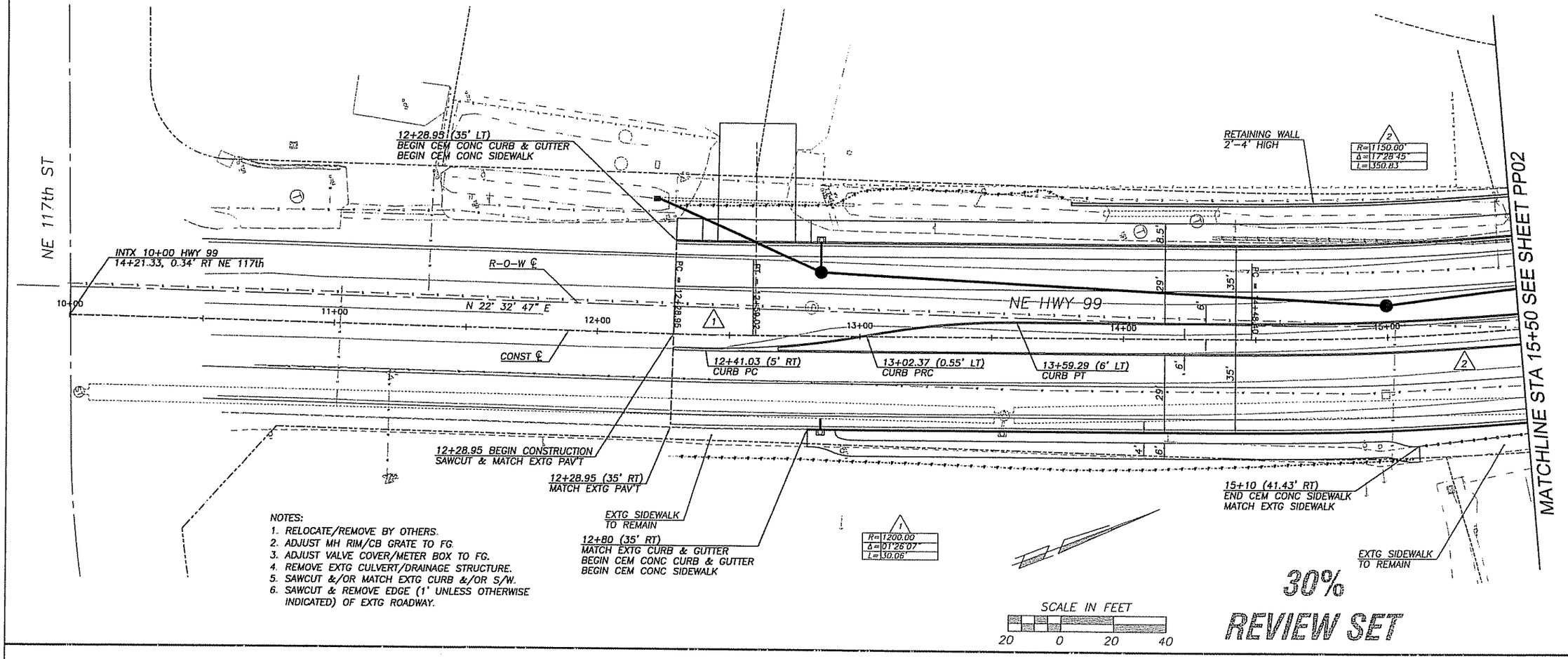

NOTES:
1. RELOCATE/REMOVE BY OTHERS.
2. ADJUST MH RIM/CB GRATE TO FG.
3. ADJUST VALVE COVER/METER BOX TO FG.
4. REMOVE EXTG CULVERT/DRAINAGE STRUCTURE.
5. SAWCUT &/OR MATCH EXTG CURB &/OR S/W.
6. SAWCUT & REMOVE EDGE (1' UNLESS OTHERWISE INDICATED) OF EXTG ROADWAY.

30%
REVIEW SET

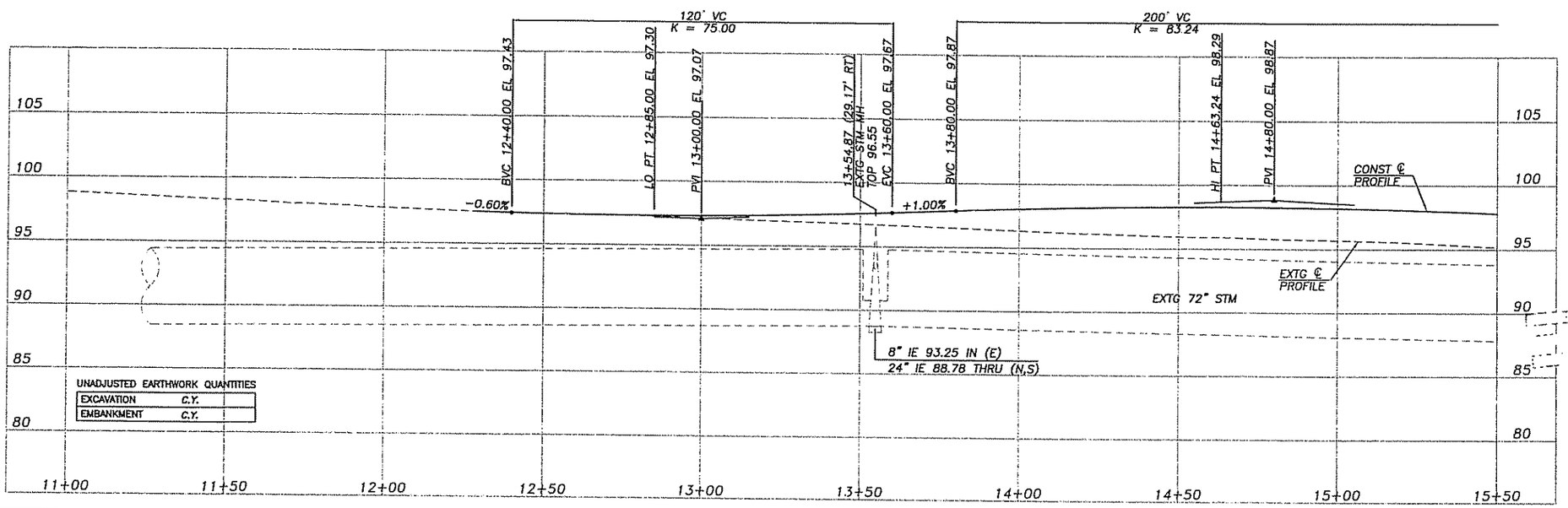

UNADJUSTED EARTHWORK QUANTITIES

EXCAVATION	C.Y.
EMBANKMENT	C.Y.

DESIGNED DPS
DRAWN DPS
CRP 341322
HOR. 1"=20'
VERT. 1"=5'
DATE OCT 2005
DWG: PP01
SHEET OF

CALL 48 HOURS BEFORE YOU DIG
1-800-553-4344
"It's the Law"
NORTHWEST UTILITIES NOTIFICATION CENTER

MICHAEL L. NIEMI
STATE OF WASHINGTON
REGISTERED PROFESSIONAL ENGINEER
EXPIRES: AUG. 10, 2006

DESIGN & ENGINEERING DIVISION
DESIGN SECTION

KLINELINE BRIDGE REPLACEMENT
HIGHWAY 99 PLAN & PROFILE
BOP to Station 15+50

proud past, promising future
CLARK COUNTY
WASHINGTON

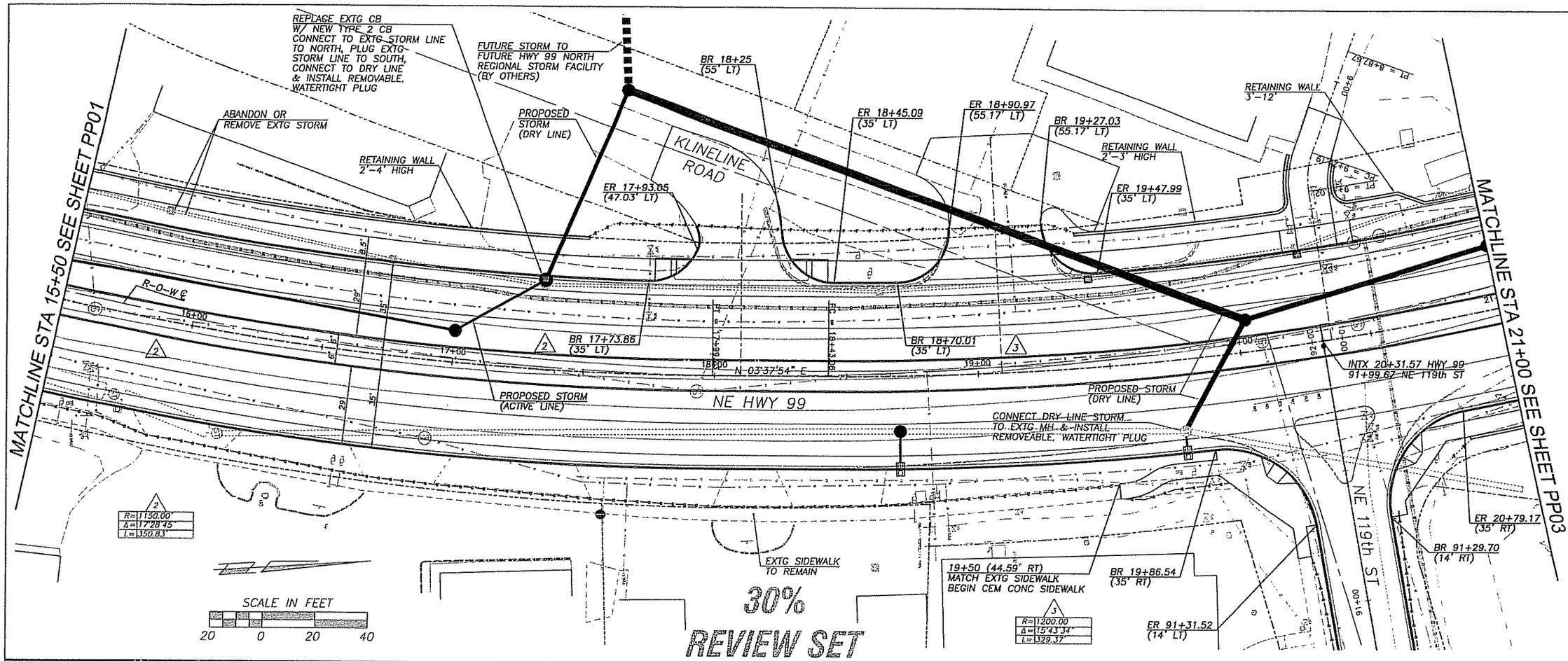

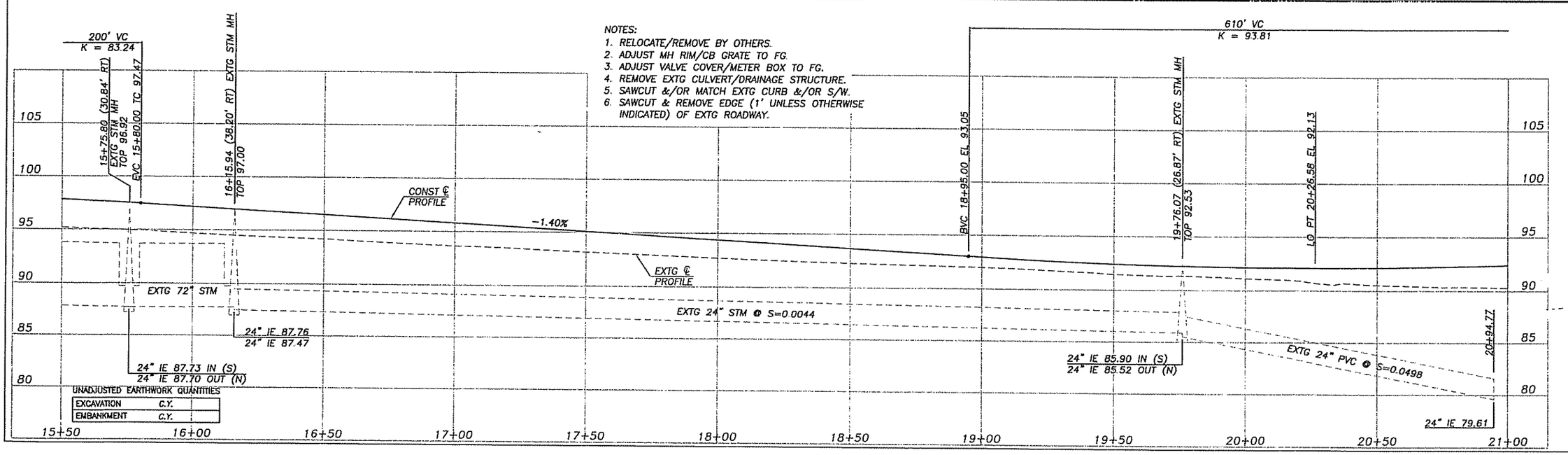

NOTES:
1. RELOCATE/REMOVE BY OTHERS.
2. ADJUST MH RIM/CB GRATE TO FG.
3. ADJUST VALVE COVER/METER BOX TO FG.
4. REMOVE EXTG CULVERT/DRAINAGE STRUCTURE.
5. SAWCUT &/OR MATCH EXTG CURB &/OR S/W.
6. SAWCUT & REMOVE EDGE (1' UNLESS OTHERWISE INDICATED) OF EXTG ROADWAY.

UNADJUSTED EARTHWORK QUANTITIES

EXCAVATION	C.Y.
EMBANKMENT	C.Y.

DESIGNED	DPS
DRAWN	DPS
CRP	341322
HOR.	1"=20'
VERT.	1"=5'
DATE	OCT 2005
DWG:	PP02
SHEET	OF

CALL 48 HOURS BEFORE YOU DIG 1-800-553-4344 "It's the Law" NORTHWEST UTILITY NOTIFICATION CENTER

STATE OF WASHINGTON DAVID L. HEXT 37344 REGISTERED PROFESSIONAL ENGINEER
EXPIRES: AUG. 10, 2006

DESIGN & ENGINEERING DIVISION
DESIGN SECTION

KLINELINE BRIDGE REPLACEMENT
HIGHWAY 99 PLAN & PROFILE
Station 15+50 to Station 21+00

proud past, promising future
CLARK COUNTY WASHINGTON

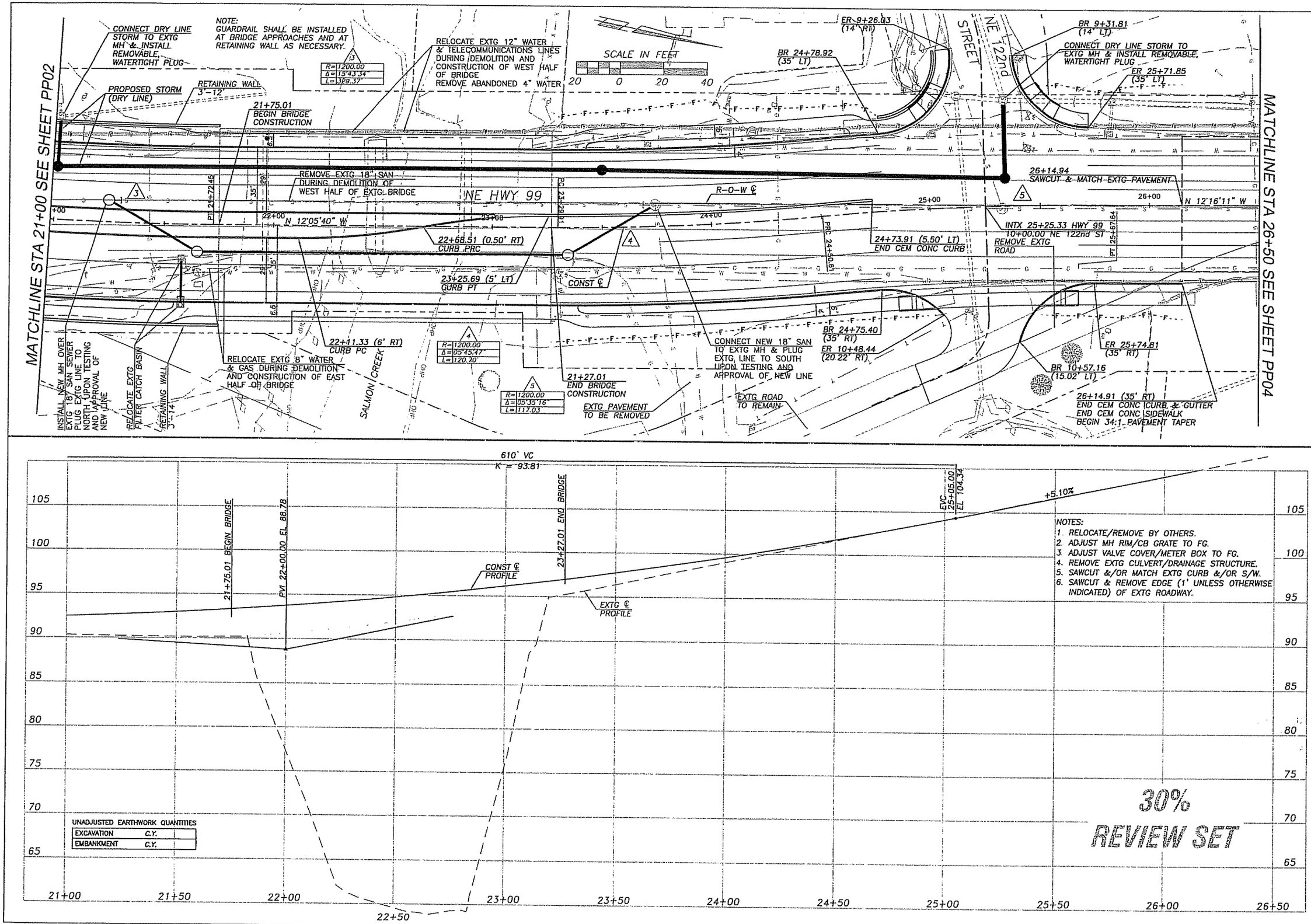

NOTES:
1. RELOCATE/REMOVE BY OTHERS.
2. ADJUST MH RIM/CB GRATE TO FG.
3. ADJUST VALVE COVER/METER BOX TO FG.
4. REMOVE EXTG CULVERT/DRAINAGE STRUCTURE.
5. SAWCUT &/OR MATCH EXTG CURB &/OR S/W.
6. SAWCUT & REMOVE EDGE (1' UNLESS OTHERWISE INDICATED) OF EXTG ROADWAY.

UNADJUSTED EARTHWORK QUANTITIES

EXCAVATION	C.Y.
EMBANKMENT	C.Y.

30% REVIEW SET

DESIGNED DPS
DRAWN DPS
CRP 341322
HOR. 1"=20'
VERT. 1"=5'
DATE OCT 2005
DWG: PP03
SHEET OF

CALL 48 HOURS BEFORE YOU DIG
1-800-553-4344
"It's the Law"
NORTHWEST UTILITIES NOTIFICATION CENTER

MICHAEL L. NIEMI
STATE OF WASHINGTON
REGISTERED PROFESSIONAL ENGINEER
EXPIRES: AUG. 10, 2006

DESIGN & ENGINEERING DIVISION
DESIGN SECTION

KLINELINE BRIDGE REPLACEMENT
HIGHWAY 99 PLAN & PROFILE
Station 21+00 to Station 26+50

proud past, promising future
CLARK COUNTY WASHINGTON

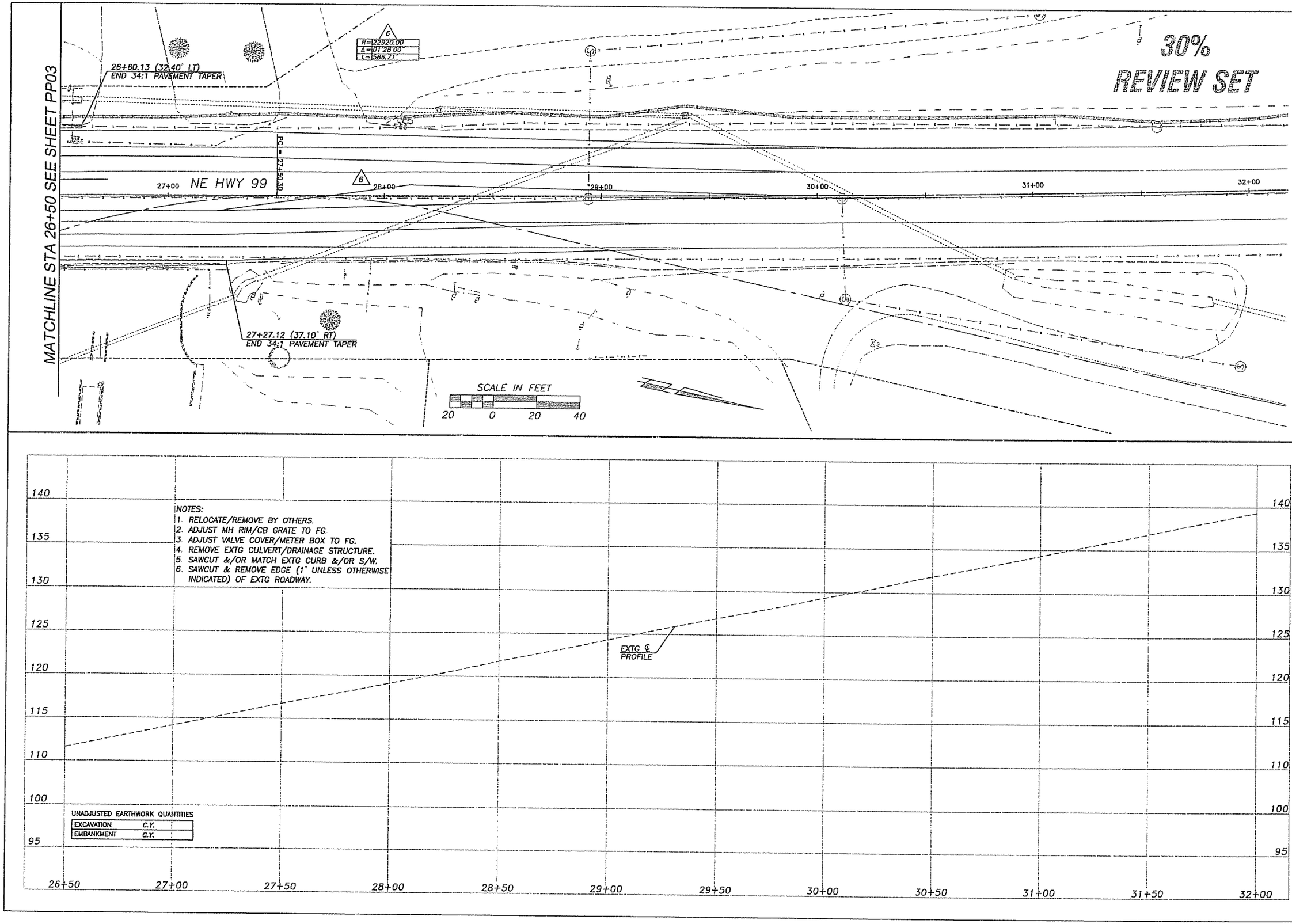

DESIGNED DPS
DRAWN DPS
CRP 341322
HOR. 1"=20'
VERT. 1"=5'
DATE OCT 2005
DWG: PP04
SHEET OF

CALL 48 HOURS BEFORE YOU DIG
1-800-553-4344
"It's the Law"
NORTHWEST UTILITIES NOTIFICATION CENTER

MICHAEL L. NIEMI
STATE OF WASHINGTON
REGISTERED PROFESSIONAL ENGINEER
EXPIRES: AUG. 10, 2006

DESIGN & ENGINEERING DIVISION
DESIGN SECTION

KLINELINE BRIDGE REPLACEMENT
HIGHWAY 99 PLAN & PROFILE
Station 26+50 to EOP

proud past, promising future
CLARK COUNTY
WASHINGTON

CURVE DATA						
ID	P.I. STATION	Δ	RADIUS	TAGENT	LENGTH	BK TANGENT BRG
1					329.37	
2					120.70	

FED AID #

CLARK COUNTY HWY 99

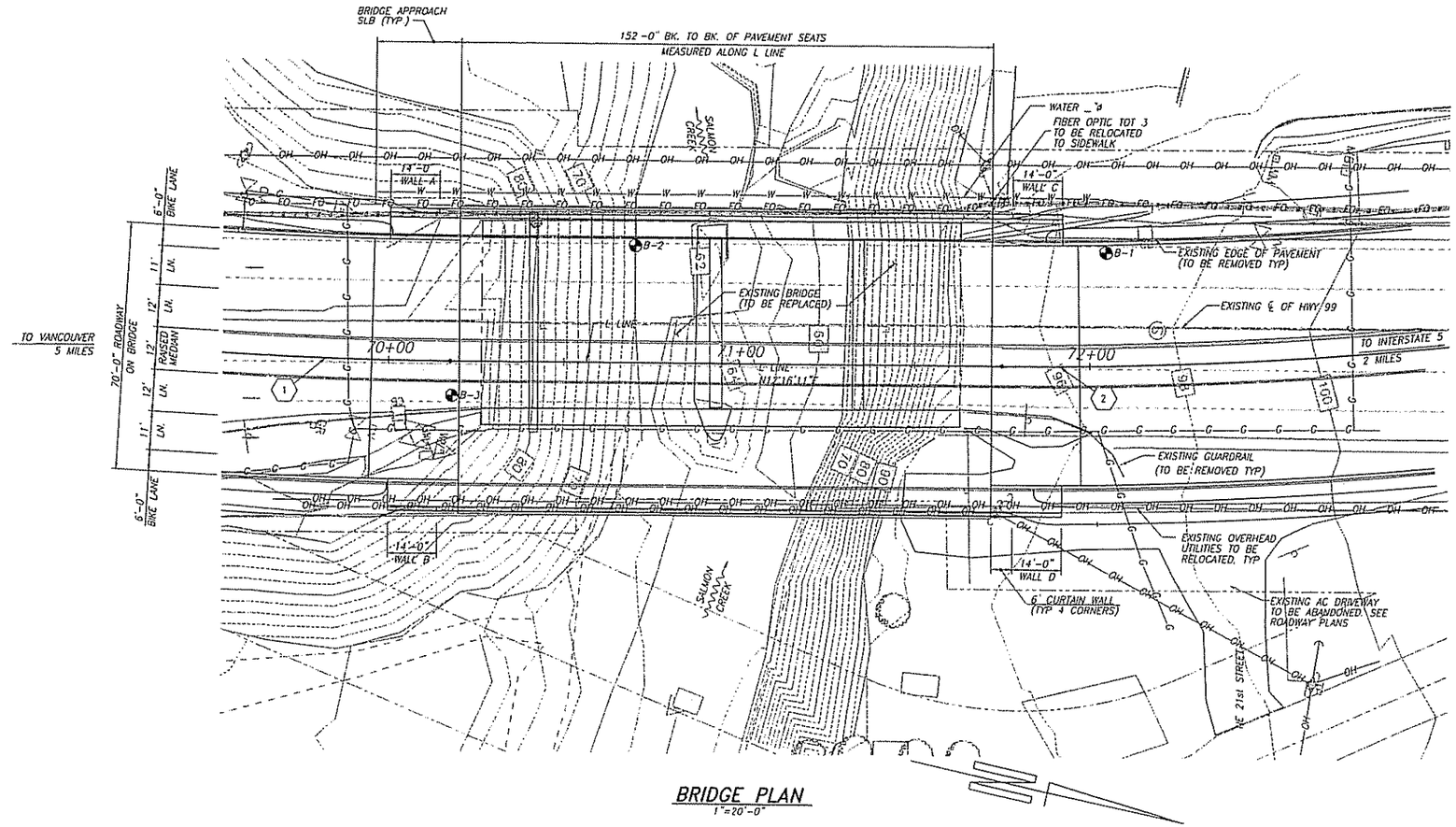

BRIDGE PLAN
1"=20'-0"

BRIDGE GENERAL NOTES

1. ALL MATERIAL AND WORK SHALL BE IN ACCORDANCE WITH THE REQUIREMENTS OF THE WASHINGTON STATE DEPARTMENT OF TRANSPORTATION, "STANDARD SPECIFICATIONS FOR ROAD, BRIDGE AND MUNICIPAL CONSTRUCTION" 2004 EDITION PLUS AMENDMENTS.
2. THIS STRUCTURE HAS BEEN DESIGNED IN ACCORDANCE WITH THE REQUIREMENTS FOR LOAD & RESISTANCE FACTOR DESIGN. "AASHTO STANDARD SPECIFICATIONS FOR HIGHWAY BRIDGES." 2004, THIRD EDITION. LOADING IS HL-93. GIRDERS HAVE ALSO BEEN DESIGNED FOR A 1.5" FUTURE ASPHALT OVERLAY. SEISMIC DESIGN CRITERIA. a = 0.30 (ACCELERATION) s = 1.2 (SITE COEFFICIENT)
3. UNLESS OTHERWISE SHOWN ON PLANS, CONCRETE COVER MEASURED FROM FACE OF CONCRETE TO THE FACE OF ANY REINFORCEMENT BAR SHALL BE 2" MINIMUM.
4. ALL DIMENSIONS SHOWN ARE MEASURED HORIZONTALLY OR VERTICALLY UNLESS NOTED OTHERWISE.
5. CONSTRUCTION JOINTS WILL BE PERMITTED ONLY AT THE LOCATIONS SHOWN ON THE PLANS OR AS APPROVED BY THE ENGINEER
6. CONCRETE CLASS:
   FOOTINGS, DIAPHRAGMS, APPROACH SLAB, WINGWALLS – CLASS 4000
   TRAFFIC BARRIER, SIDEWALK ON BRIDGE ---- CLASS 4000 LS
   DRILLED PIERS, 4000P
7. USE ANTIGRAFITTI WATER SEALANT ON ALL EXPOSED CONCRETE AND MASONRY SURFACES, HORIZONTAL AND VERTICAL

LEGEND

	UTILITY POLE–EXISTING
	POLE ANCHOR–EXISTING
—OH—	OVERHEAD UTILITY–EXISTING
—BT—	BURIED TELEPHONE–EXISTING
—FO—	FIBER OPTIC–EXISTING
—G—	GASLINE–EXISTING
—W—	WATERLINE–EXISTING
	GAURDRAIL–EXISTING
	BORING LOCATION
	EXISTING STRUCTURE

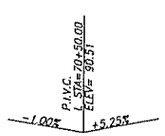

L LINE PROFILE

DATUM
NAVD 1988

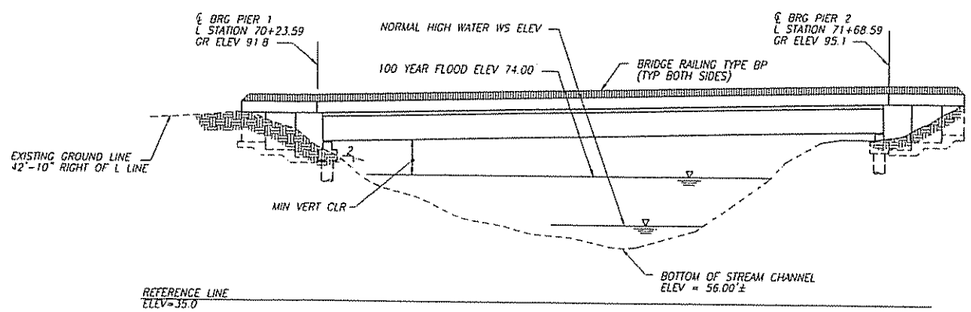

BRIDGE ELEVATION
1"=20'-0"

HWY 99 BRIDGE DRAWING LIST

B1	LAYOUT PLAN
B2	FOUNDATION LAYOUT
B3	ABUTMENT LAYOUT
B4	ABUTMENT DETAILS
B5	WINGWALL LAYOUT No. 1
B6	WINGWALL LAYOUT No. 2
B7	WINGWALL DETAILS
B8	TYPICAL SECTION
B9	GIRDER LAYOUT
B10	GIRDER DETAILS
B11	INTERMEDIATE DIAPHRAGMS
B12	RAILING DETAILS
B13	APPROACH SLAB

PRECAST PRESTRESSED CONCRETE 1– GIRDER (W83G)
LOADING: HL-93

30% SUBMITTAL

DESIGNED	BK, DS
DRAWN	TR
CRP	341412
HOR.	AS NOTED
VERT.	AS NOTED
DATE	7/29/05
DWG:	B1
SHEET B1	OF 18

CALL 48 HOURS BEFORE YOU DIG 1-800-553-4344 "It's the Law" NORTHWEST UTILITIES NOTIFICATION CENTER

DOUGLAS A. SAREK-SEN P.E. STATE OF WASHINGTON 32156 PROFESSIONAL ENGINEER EXPIRES OCT. 22, 2006

ENGINEERING PROGRAM
DESIGN SECTION

KLINELINE BRIDGE
LAYOUT PLAN

proud past, promising future
CLARK COUNTY WASHINGTON

Plotted on Oct 28, 2005 – 1:28pm, Modified 10-27-05
H:\Project-Files\2005\051198 – Klineline Bridge Replacement\AutoCAD FILES\ B1

Plotted on Oct 28, 2005 - 1:28pm, Modified 10-28-05
H:\Project-Files\2005\05198 - Klineline Bridge Replacement\AutoCAD FILES\ B2

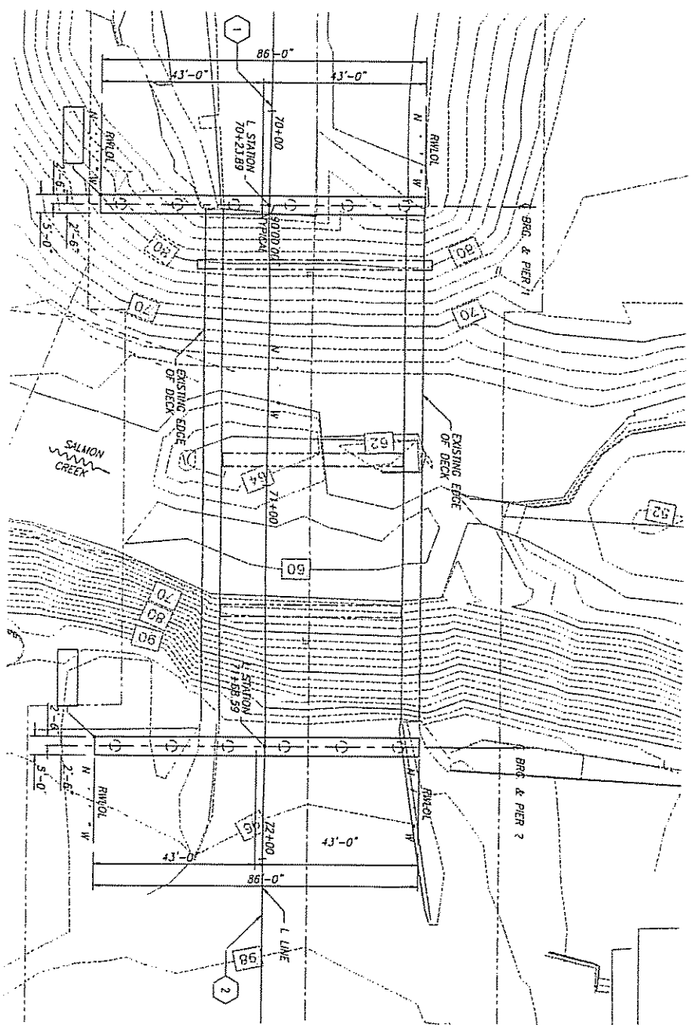

FOUNDATION PLAN
1"=20'-0"

NOTES:
1 — FOR CURVE DATA TABLE ON SHEET B1 (1) SEE "CURVE DATA"
2 — FOR UTILITY INFORMATION, SEE "UTILITY PLAN".
3 ▭ DENOTES BOTTOM OF FOOTING ELEVATION

FED AID #

30% SUBMITTAL

CLARK COUNTY WASHINGTON
proud past, promising future

ENGINEERING PROGRAM
DESIGN SECTION

KLINELINE BRIDGE
FOUNDATION LAYOUT

DOUGLAS L. SARKKINEN P.E. STATE OF WASHINGTON 24136 REGISTERED PROFESSIONAL ENGINEER
EXPIRES OCT. 22, 2006

CALL 48 HOURS BEFORE YOU DIG
1-800-553-4344
"It's the Law"
NORTHWEST UTILITIES NOTIFICATION CENTER

DESIGNED	BK, DS
DRAWN	TR
CRP	341412
HOR.	AS NOTED
VERT.	AS NOTED
DATE	7/29/05
DWG:	B2
SHEET	B2 OF 18

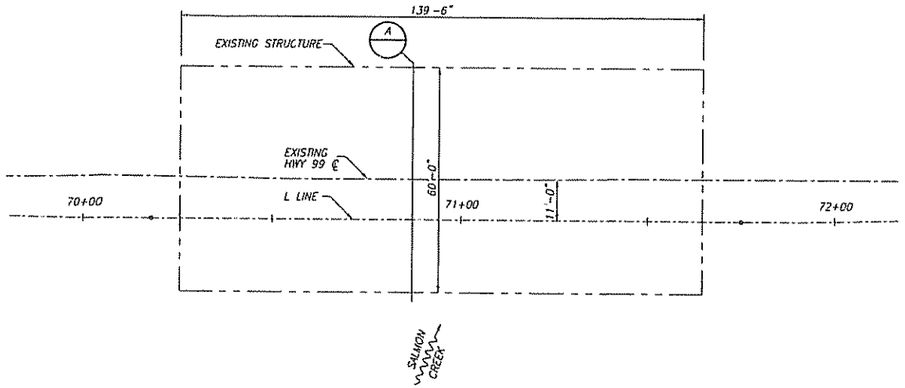

EXISTING CONDITIONS
1"=20'-0"

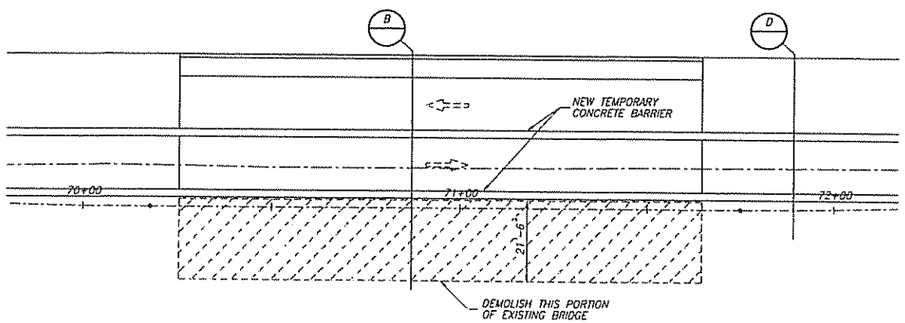

STAGE 1
1"=20'-0"

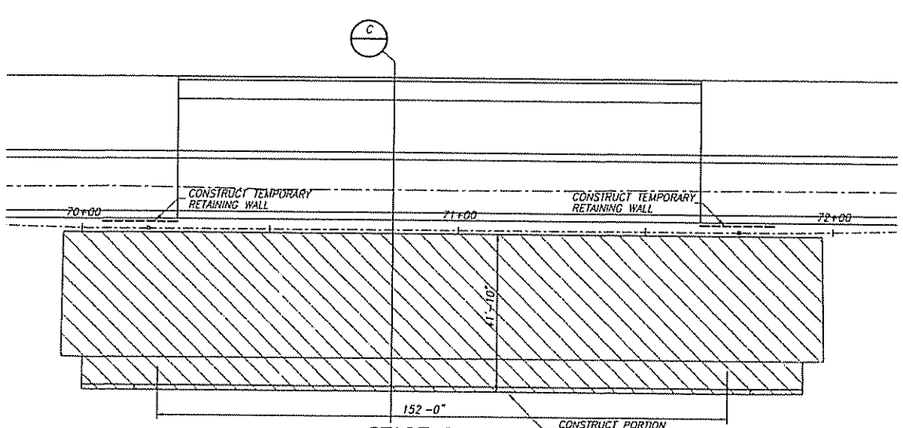

STAGE 2
1"=20'-0"

FED AID #

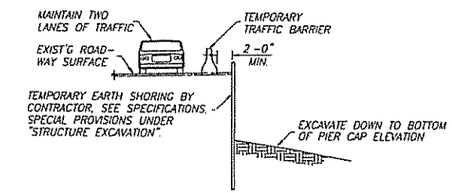

D / B3 SECTION
1.10

LEGEND

- INDICATES DIRECTION OF FLOW
- DENOTES DIRECTION OF TRAFFIC
- EXISTING STRUCTURE
- STRUCTURE REMOVAL
- NEW CONSTRUCTION

30% SUBMITTAL

DESIGNED	BK. DS
DRAWN	TR
CRP	341412
HOR.	AS NOTED
VERT.	AS NOTED
DATE	7/29/05
DWG.	B3
SHEET B3	OF 18

CALL 48 HOURS BEFORE YOU DIG 1-800-553-4344 "It's the Law" NORTHWEST UTILITIES NOTIFICATION CENTER

DOUGLAS A. BOROSTEN P.E. STATE OF WASHINGTON REGISTERED PROFESSIONAL ENGINEER
EXPIRES OCT. 22, 2006

ENGINEERING PROGRAM
DESIGN SECTION

KLINELINE BRIDGE
CONSTRUCTION STAGING PLAN NO. 1

proud past, promising future
CLARK COUNTY WASHINGTON

Plotted on Oct 28, 2005 - 1:28pm, Modified 10-28-05
H:\Project-Files\2005\05198 - Kineline Bridge Replacement\AutoCAD FILES\ B3

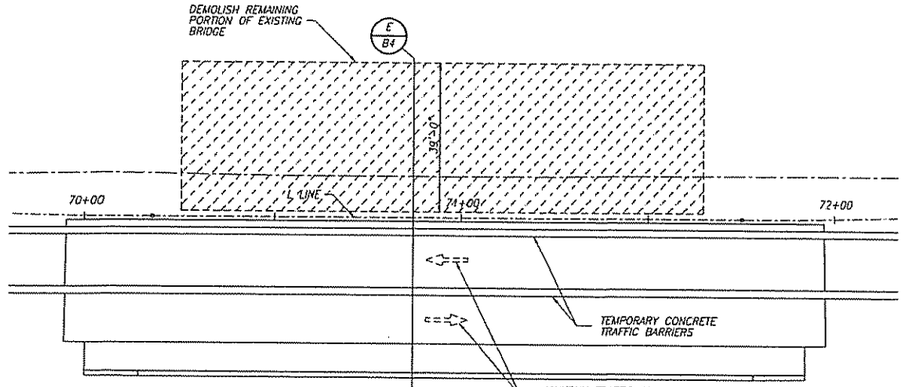

STAGE 3
1"=20'-0"

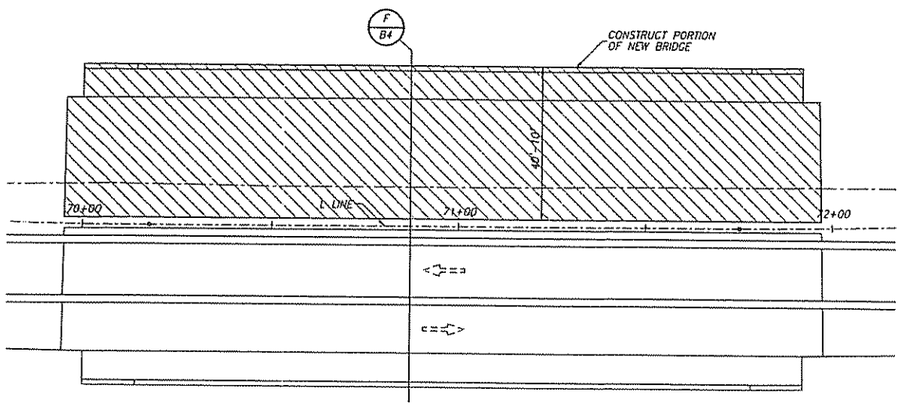

STAGE 4
1"=20'-0"

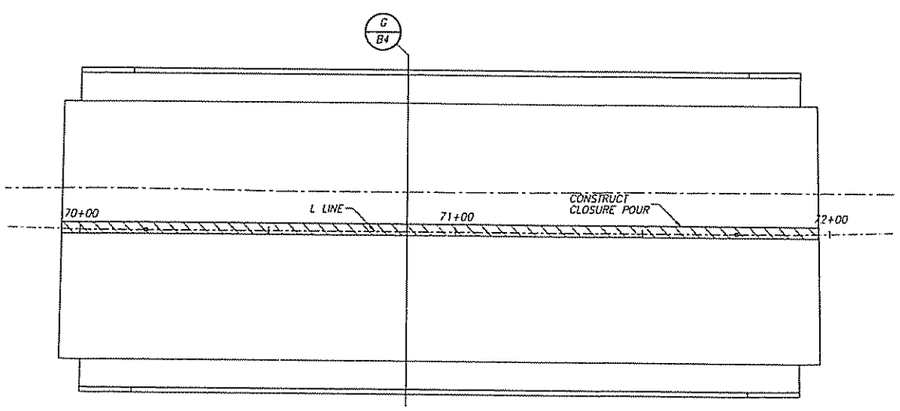

FINAL CONSTRUCTION
1"=20'-0"

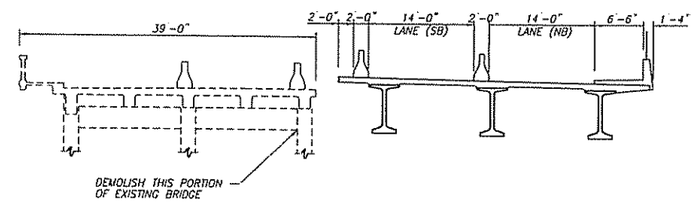

E
B4
SECTION
1"=10'-0"

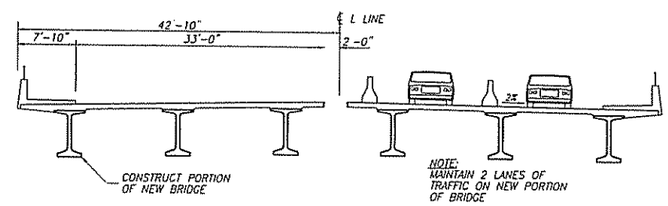

F
B4
SECTION
1"=10'-0"

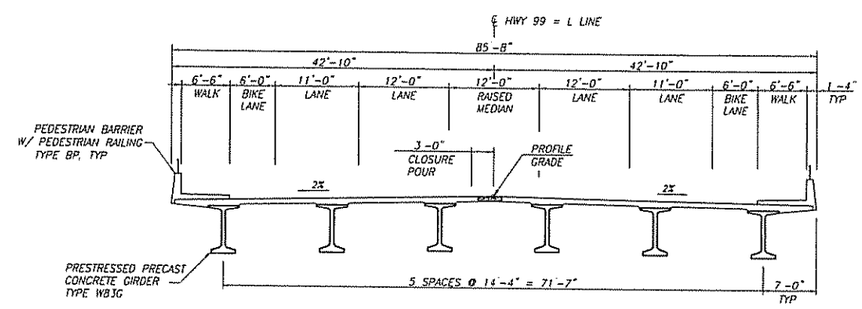

G
B4
TYPICAL SECTION
1"=10'-0"

FED AID #

30% SUBMITTAL

DESIGNED BK, DS
DRAWN TR
CRP 341412
HOR. AS NOTED
VERT. AS NOTED
DATE 7/29/05
DWG: B4
SHEET B4 OF 18

CALL 48 HOURS BEFORE YOU DIG
1-800-553-4344
"It's the Law"
NORTHWEST UTILITIES NOTIFICATION CENTER

DOUGLAS L. SARKKINEN P.E.
STATE OF WASHINGTON
24106
REGISTERED PROFESSIONAL ENGINEER
EXPIRES OCT. 22, 2006

ENGINEERING PROGRAM
DESIGN SECTION

KLINELINE BRIDGE
CONSTRUCTION STAGING PLAN NO. 2

proud past, promising future
CLARK COUNTY
WASHINGTON

Plotted on Oct 28, 2005 - 1:28pm, Modified 10-28-05
H:\Project-Files\2005\05198 - Klineline Bridge Replacement\AutoCAD FILES\ B4

FED AID #

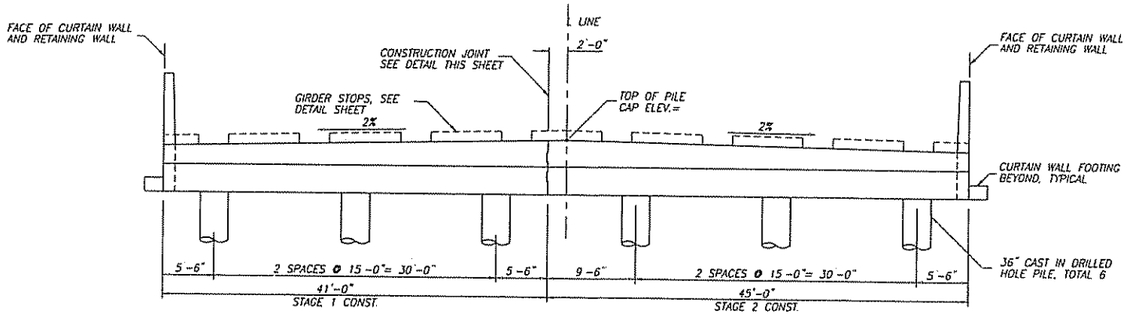

ABUTMENT ELEVATION

1/8"=1'-0"

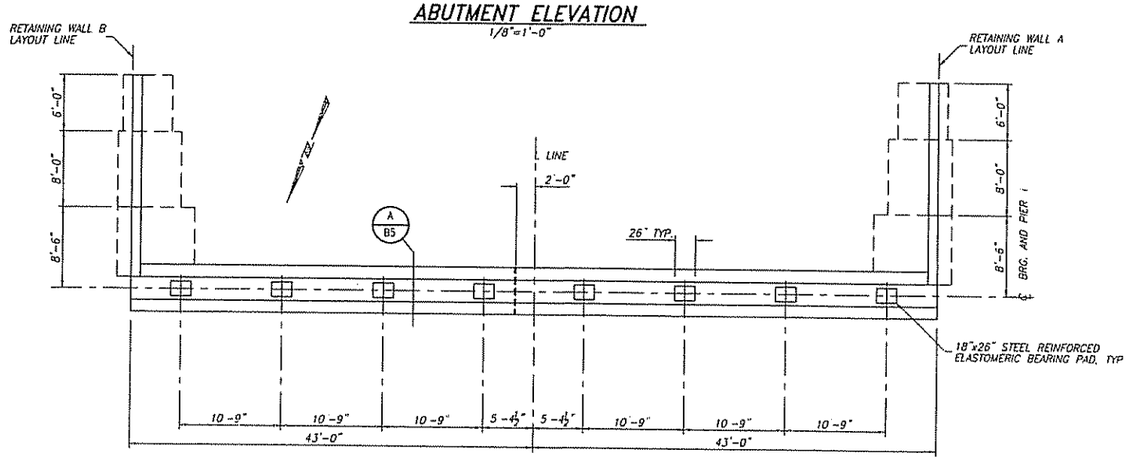

ABUTMENT PLAN

1/8"=1'-0"

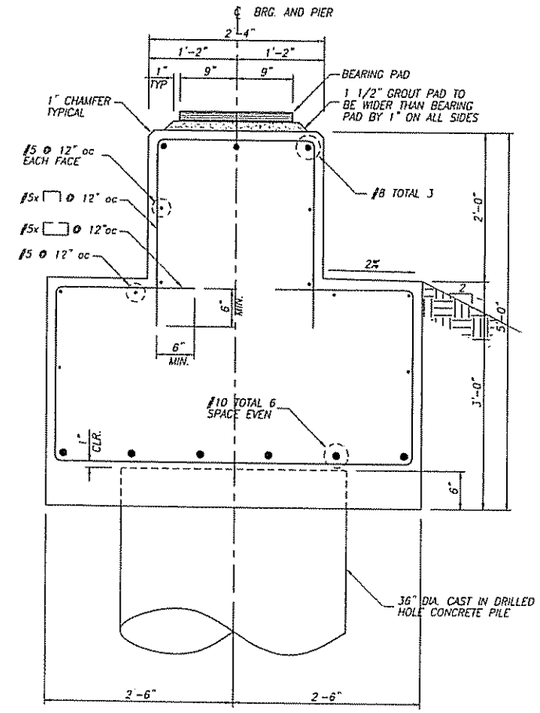

A / B5 **SECTION**

1"=1'-0"

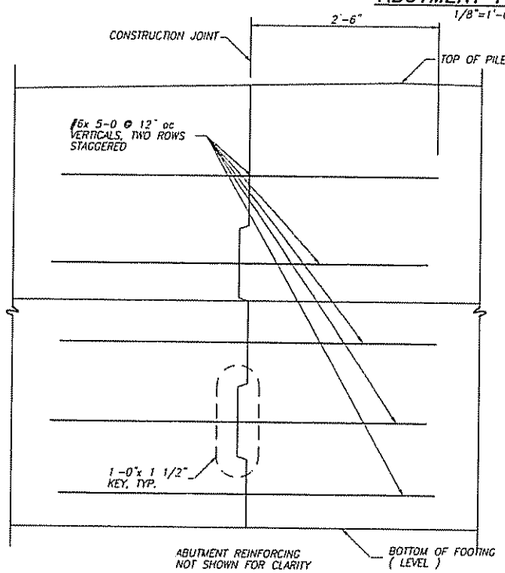

B / B5 **CONSTRUCTION JOINT DETAIL**

1"=1'-0"

30% SUBMITTAL

DESIGNED	BK, DS
DRAWN	TR
CRP	341412
HOR.	AS NOTED
VERT.	AS NOTED
DATE	7/29/05
DWG:	B5
SHEET B5	OF 18

CALL 48 HOURS BEFORE YOU DIG 1-800-553-4344 "It's the Law" NORTHWEST UTILITIES NOTIFICATION CENTER

DOUGLAS L. SARKKINEN P.E. STATE OF WASHINGTON 34158 REGISTERED PROFESSIONAL ENGINEER

EXPIRES OCT. 22, 2005

ENGINEERING PROGRAM
DESIGN SECTION

KLINELINE BRIDGE
ABUTMENT LAYOUT

proud past, promising future

CLARK COUNTY WASHINGTON

Plotted on Oct 28, 2005 – 1:28pm, Modified 10-27-05
H:\Project-Files\2005\05198 – Kineline Bridge Replacement\AutoCAD FILES\ B5

Plotted on Oct 28, 2005 - 1:28pm, Modified 10-28-05
H:\Project-Files\2005\05198 - Klineline Bridge Replacement\AutoCAD FILES\ B10

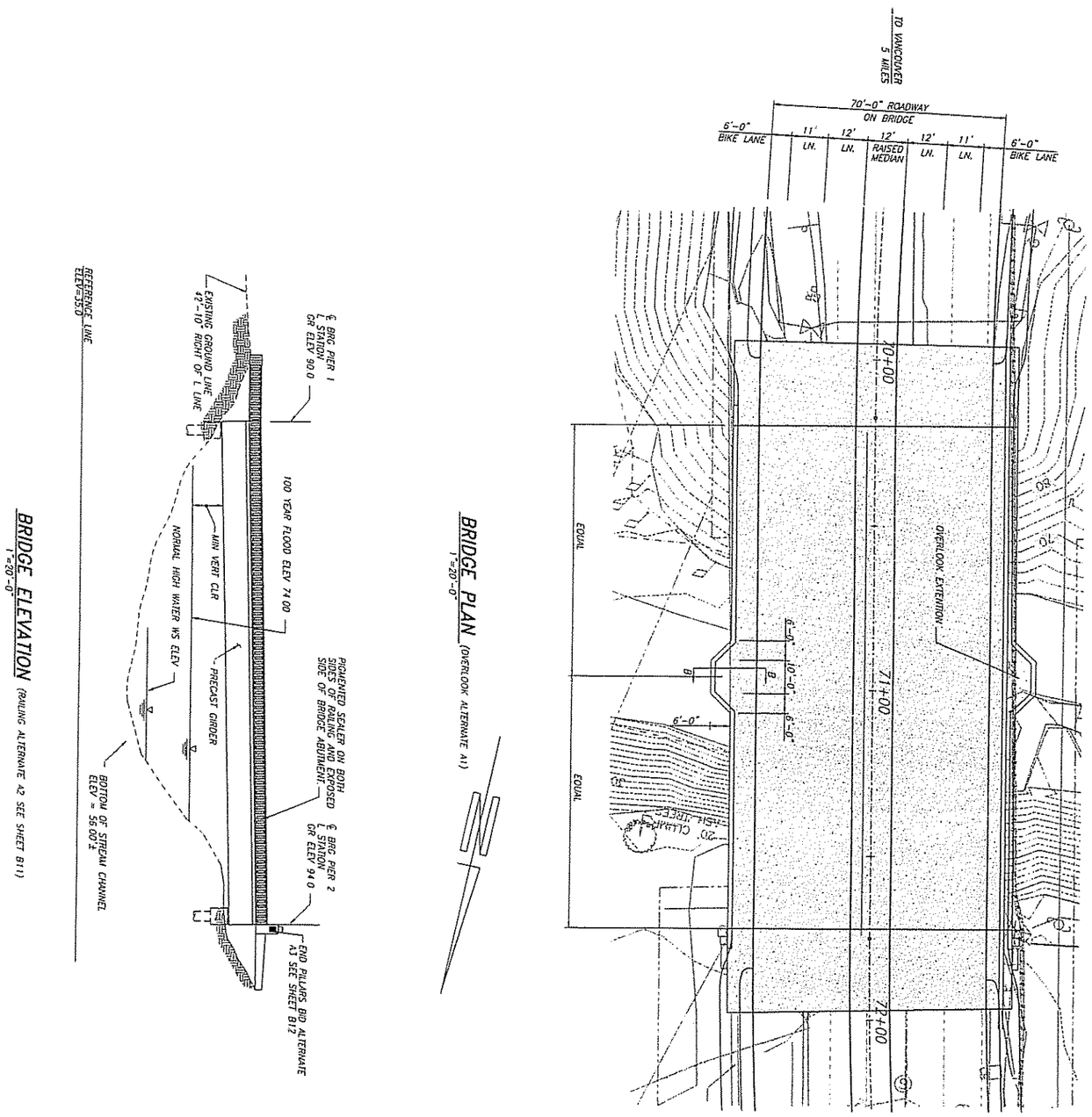

FED AID #

BID ALTERNATE 30% SUBMITTAL

CLARK COUNTY WASHINGTON
proud past, promising future

ENGINEERING PROGRAM
DESIGN SECTION

KLINELINE BRIDGE
BID ALTERNATE

DOUGLAS L. SARKKINEN P.E. STATE OF WASHINGTON 24130 REGISTERED PROFESSIONAL ENGINEER
EXPIRES OCT. 22, 2006

CALL 48 HOURS BEFORE YOU DIG
1-800-553-4344
"It's the Law"
NORTHWEST UTILITIES NOTIFICATION CENTER

DESIGNED	BK, DS
DRAWN	TR
CRP	341412
HOR.	AS NOTED
VERT.	AS NOTED
DATE	7/29/05
DWG:	B10
SHEET	B10 OF 18

FED AID #

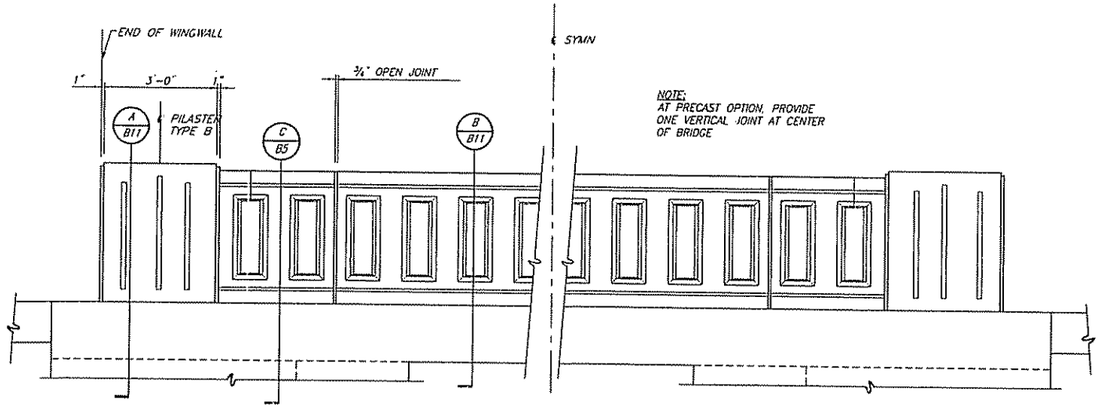

EXTERIOR BRIDGE RAIL ELEVATION
1/2"=1'-0"

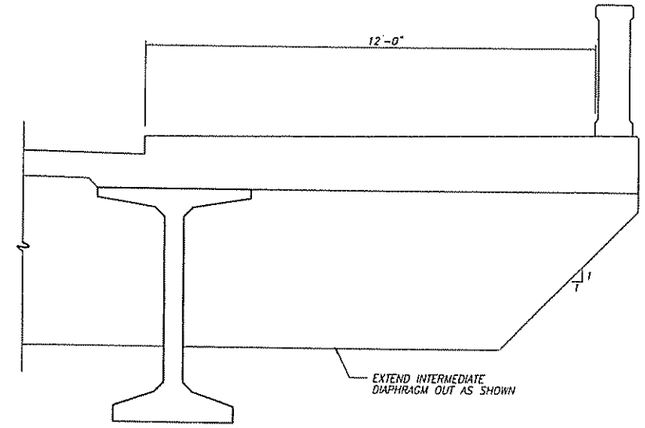

B B11 SECTION
1/2"=1'-0"

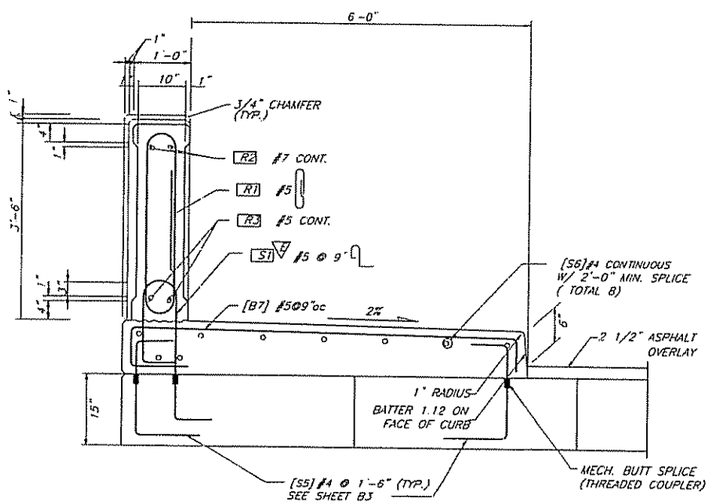

NOTE: FILL VOIDS IN SLABS AT REBAR DOWEL LOCATIONS.

C B11 TYPICAL SECTION – PEDESTRIAN BARRIER
3/4"=1'-0"

* MIN. HEIGHT. PEDESTRIAN BARRIER HEIGHT MAY VARY IF REQUIRED TO PROVIDE A SMOOTH PROFILE.

BID ALTERNATE 30% SUBMITTAL

DESIGNED	BK, DS
DRAWN	TR
CRP	341412
HOR.	AS NOTED
VERT.	AS NOTED
DATE	7/29/05
DWG:	B11
SHEET B11	OF 18

CALL 48 HOURS BEFORE YOU DIG 1-800-553-4344 "It's the Law" NORTHWEST UTILITIES NOTIFICATION CENTER

DOUGLAS T. SARGENT-KEEN P.E. STATE OF WASHINGTON 31417 REGISTERED PROFESSIONAL ENGINEER
EXPIRES OCT. 22, 2006

ENGINEERING PROGRAM
DESIGN SECTION

KLINELINE BRIDGE
BID ALTERNATE DETAILS No. 1

proud past, promising future
CLARK COUNTY WASHINGTON

Plotted on Oct 28, 2005 – 1:28pm, Modified 10-28-05
H:\Project-Files\2005\05198 – Kline line Bridge Replacement\AutoCAD FILES\ B11

FED AID #

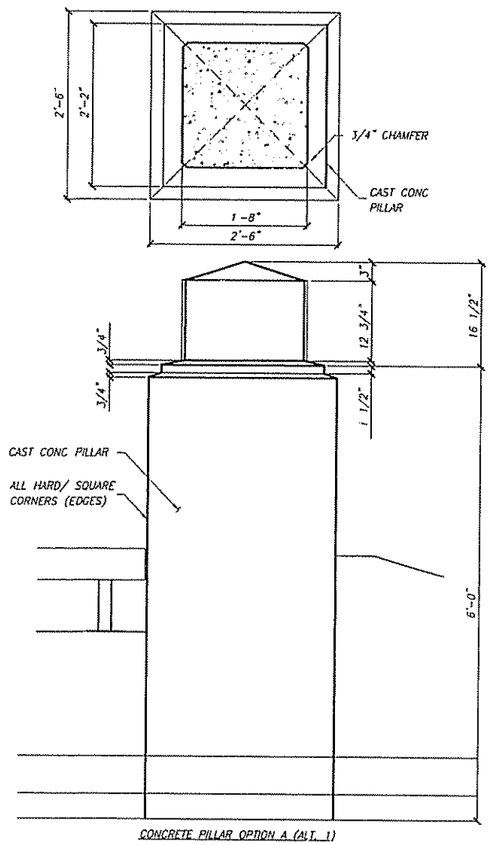

CONCRETE PILLAR OPTION A (ALT. 1)

1/B12 SECTION
1"=1'-0"

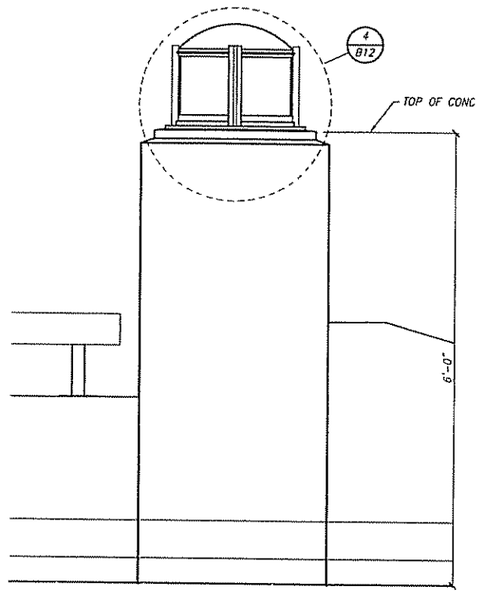

CONCRETE PILLAR OPTION B (ALT. 2)

2/B12 SECTION
1"=1'-0"

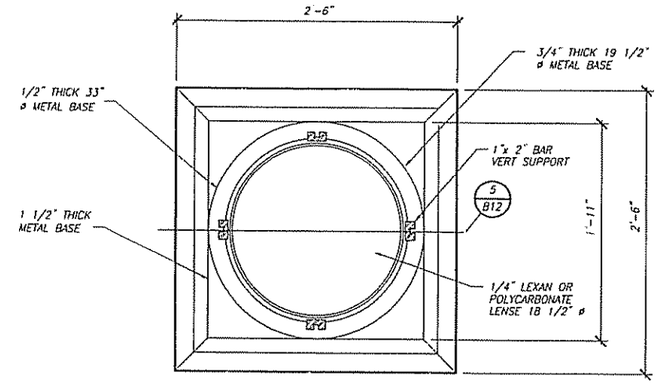

CONCRETE PILLAR OPTION B

3/B12 SECTION
1 1/2"=1'-0"

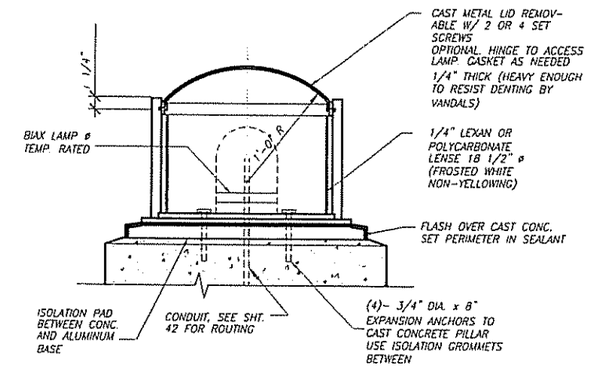

4/B12 SECTION
1 1/2"=1'-0"

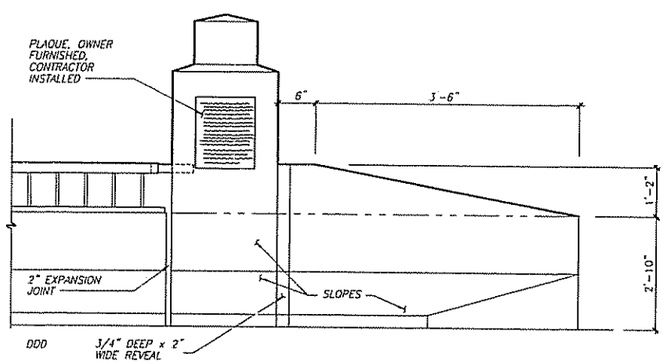

ALTERNATE BID NO. 1

6/B12 SECTION
3/4"=1'-0"

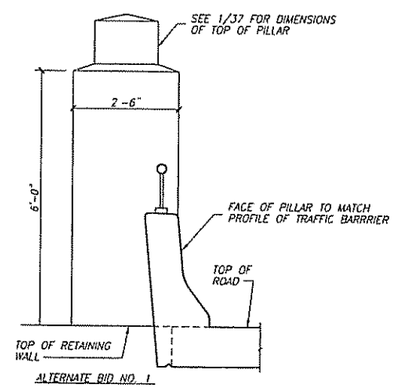

ALTERNATE BID NO. 1

7/B12 SECTION
3/4"=1'-0"

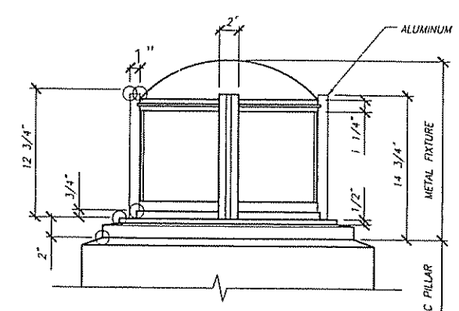

5/B12 SECTION
1 1/2"=1'-0"

BID ALTERNATE 30% SUBMITTAL

DESIGNED	BK, DS
DRAWN	TR
CRP	341412
HOR.	AS NOTED
VERT.	AS NOTED
DATE	7/29/05
DWG.	B12
SHEET B12	OF 18

CALL 48 HOURS BEFORE YOU DIG 1-800-553-4344 "It's the Law" NORTHWEST UTILITIES NOTIFICATION CENTER

POLYAS A. SARRANCH P.E. STATE OF WASHINGTON 34108 REGISTERED PROFESSIONAL ENGINEER

DRPES OCT. 22, 2006

ENGINEERING PROGRAM
DESIGN SECTION

KLINELINE BRIDGE
BID ALTERNATE DETAILS No. 2

proud past, promising future

CLARK COUNTY WASHINGTON

Plotted on Oct 28, 2005 - 1:28pm, Modified 10-28-05
H:\Project-Files\2005\05198 - Klineline Bridge Replacement\AutoCAD FILES\ B12

30% SUBMITTAL

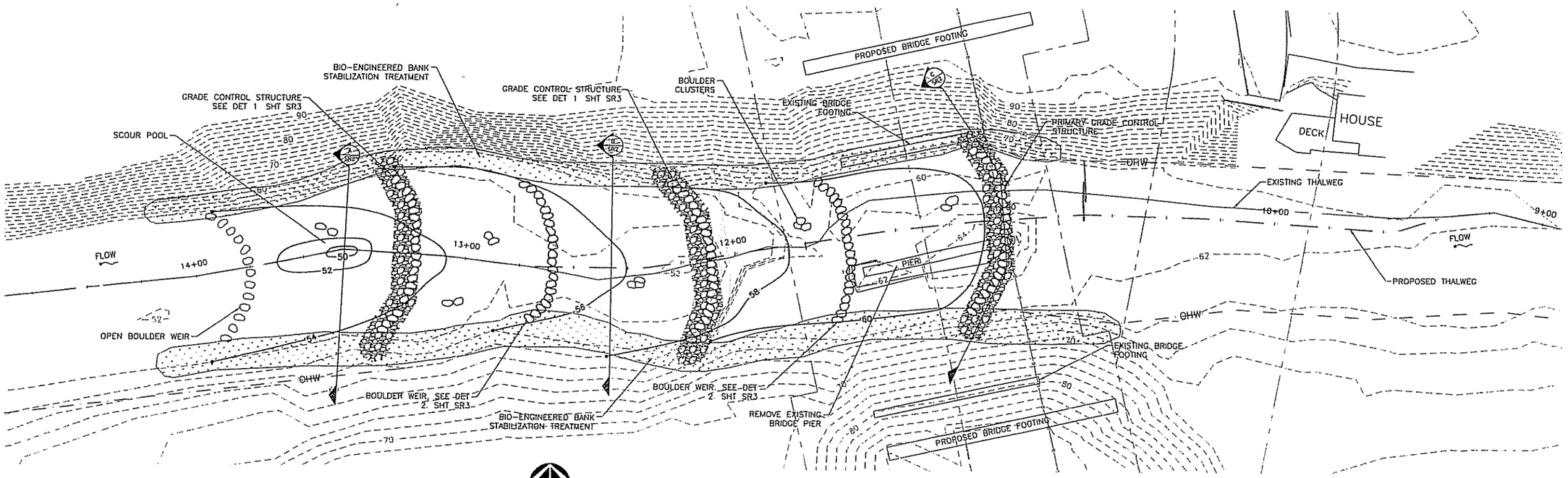

PLAN

SCALE: 1"=20' (FOR 22"X34" SHEET)

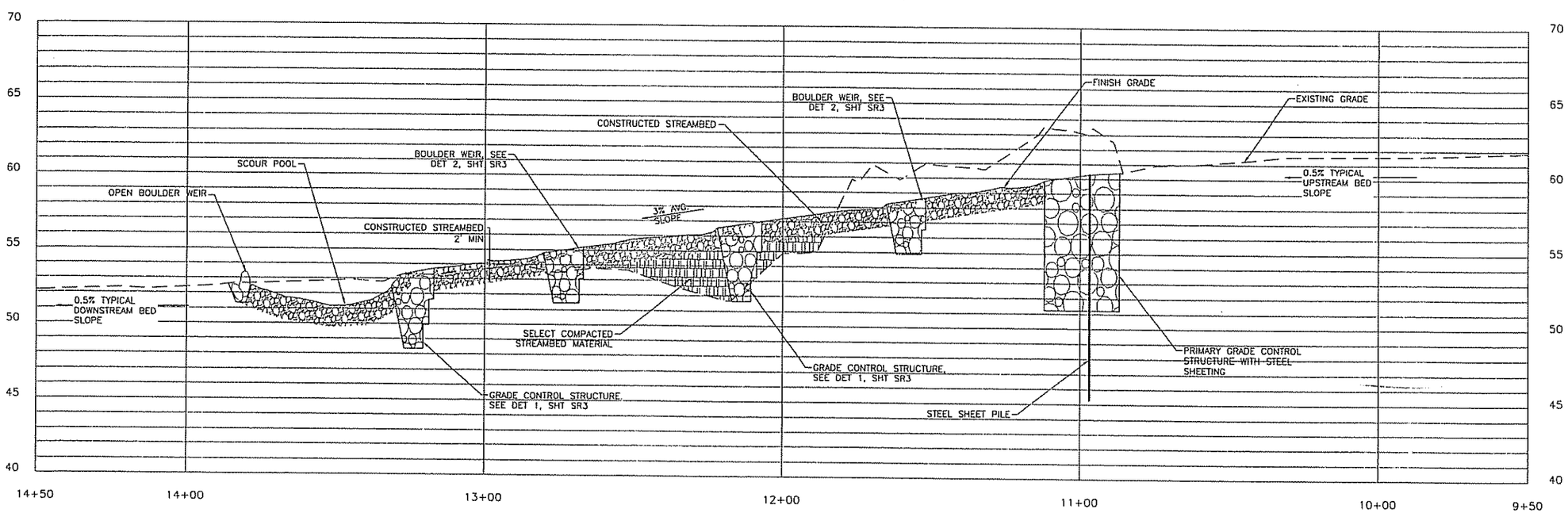

STREAM PROFILE AT PROPOSED THALWEG

SCALE: HOR 1"=20' (FOR 22"X34" SHEET)
VER 1"=4'

DESIGNED	KMV
DRAWN	EES
CRP	
HOR.	SHOWN
VERT.	
DATE	9/30/05
DWG.	SR1
SHEET	1 OF 5

CALL 48 HOURS BEFORE YOU DIG 1-800-553-4344 "It's the Law" NORTHWEST NOTIFICATION CENTER

DESIGN & ENGINEERING DIVISION
DESIGN SECTION

STREAM RESTORATION
PLAN AND PROFILE

VIGIL AGRIMIS, INC.
Engineering Landscape Architecture Environmental Science
819 SE Morrison St., Suite 310
Portland, Oregon
97214
503.274.2010
fax: 503.274.2024
www.vigil-agrimis.com

CLARK COUNTY WASHINGTON

30% SUBMITTAL

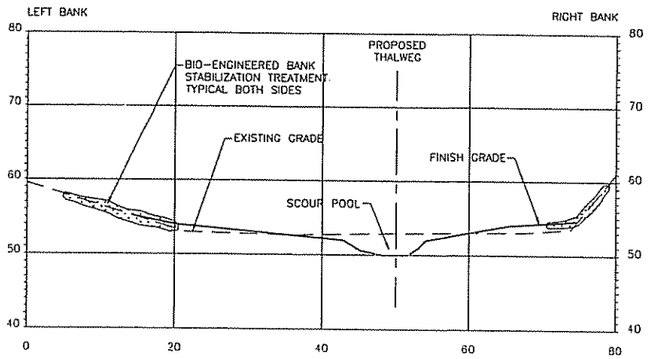

A SR1 SECTION (SCOUR POOL – STA 13+45)
SCALE: 1"=10'
(FOR 22"X34" SHEET)

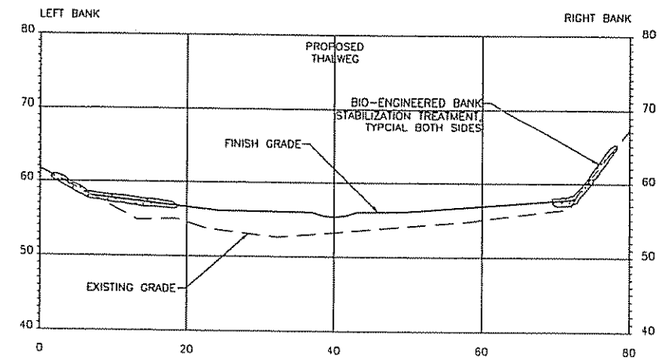

B SR1 SECTION (RIFFLE SECTION STA 12+45)
SCALE: 1"=10'
(FOR 22"X34" SHEET)

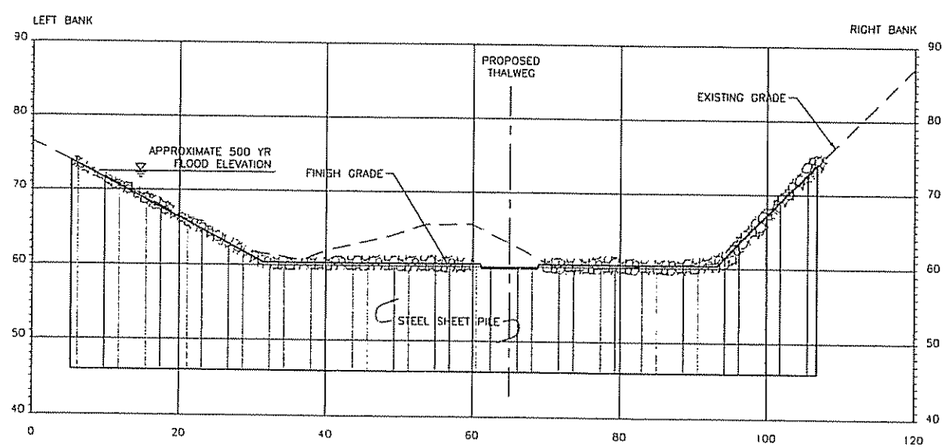

C SR1 SECTION (PRIMARY GRADE CONTROL STRUCTURE – STA 11+00)
SCALE: 1"=10'
(FOR 22"X34" SHEET)

DESIGNED	KAV
DRAWN	EES
CRP	
HOR.	SHOWN
VERT.	
DATE	9/30/05
DWG:	SR2
SHEET	OF

CALL 48 HOURS BEFORE YOU DIG 1-800-553-4344 "It's the Law" NORTHWEST UTILITIES NOTIFICATION CENTER

DESIGN & ENGINEERING DIVISION
DESIGN SECTION

STREAM RESTORATION
TYPICAL SECTIONS

VIGIL AGRIMIS, INC.
Engineering Landscape Architecture, Environmental Science
819 SE Morrison St., Suite 310
Portland, Oregon
97214
503.274.2010
fax: 503.274.2024
www.vigil-agrimis.com

CLARK COUNTY WASHINGTON

30% SUBMITTAL

SECTION VIEW LOOKING UPSTREAM

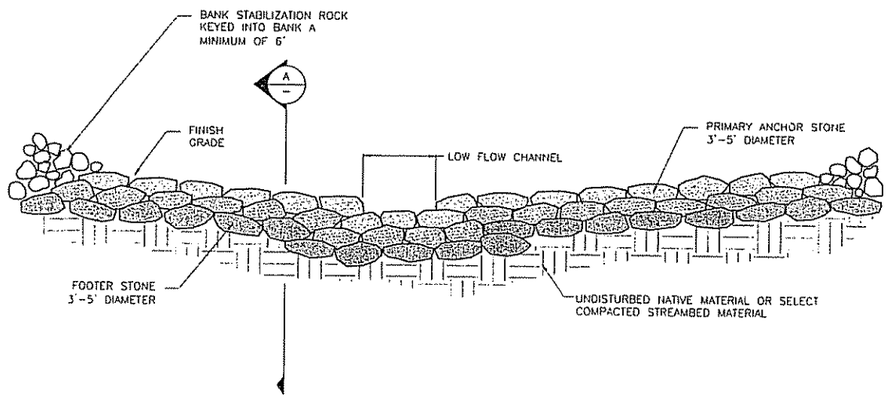

1 / SR1 GRADE CONTROL STRUCTURE DETAIL
SCALE: NTS

SECTION VIEW LOOKING UPSTREAM

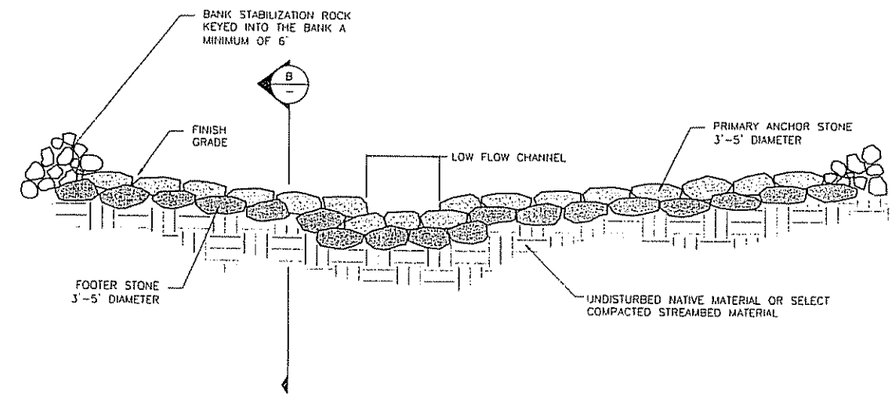

2 / SR1 BOULDER WEIR DETAIL
SCALE: NTS

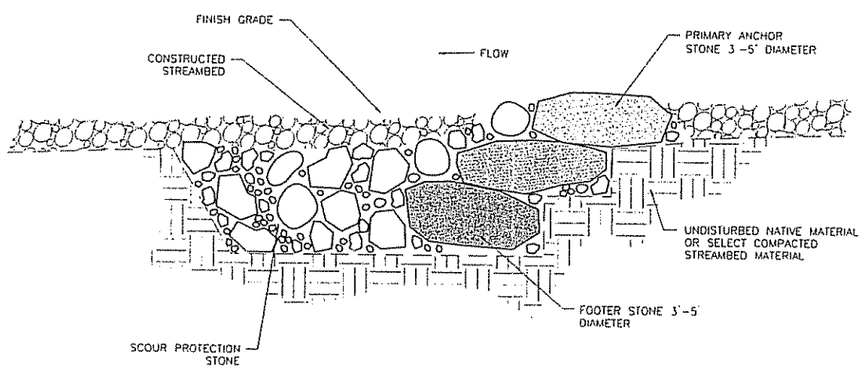

A / — GRADE CONTROL STRUCTURE SECTION
SCALE: NTS

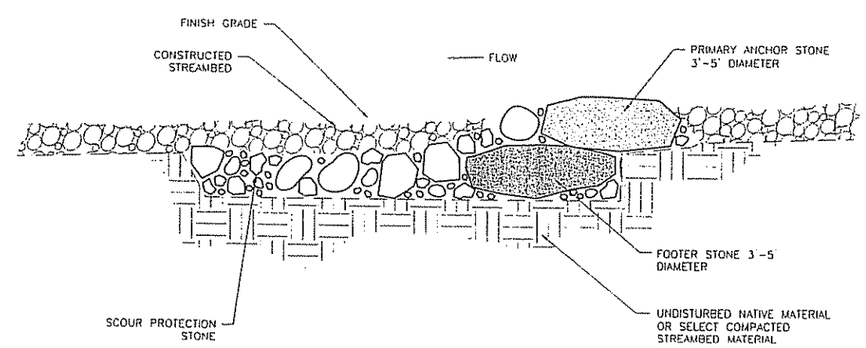

B / — BOULDER WEIR SECTION
SCALE: NTS

DESIGNED	KMV
DRAWN	RMM
CRP	
HOR.	SHOWN
VERT.	N/A
DATE	9/30/05
DWG.	SR3
SHEET	OF

CALL 48 HOURS BEFORE YOU DIG 1-800-553-4344 "It's the Law" NORTHWEST UTILITIES NOTIFICATION CENTER

DESIGN & ENGINEERING DIVISION
DESIGN SECTION

STREAM RESTORATION DETAILS

VIGIL AGRIMIS, INC.
Engineering Landscape Architecture Environmental Science
819 SE Morrison St., Suite 310
Portland, Oregon
97214
503.274.2010
fax: 503.274.2024
www.vigil-agrimis.com

CLARK COUNTY WASHINGTON