CAPITAL IMPROVEMENTS PROGRAM
COUNTY ROAD PROJECT # 382822

NE 15TH AVENUE

FROM NE UNION ROAD TO NE 179TH STREET

PLANS FOR THE CONSTRUCTION OF
ROADWAYS AND STORM DRAINAGE

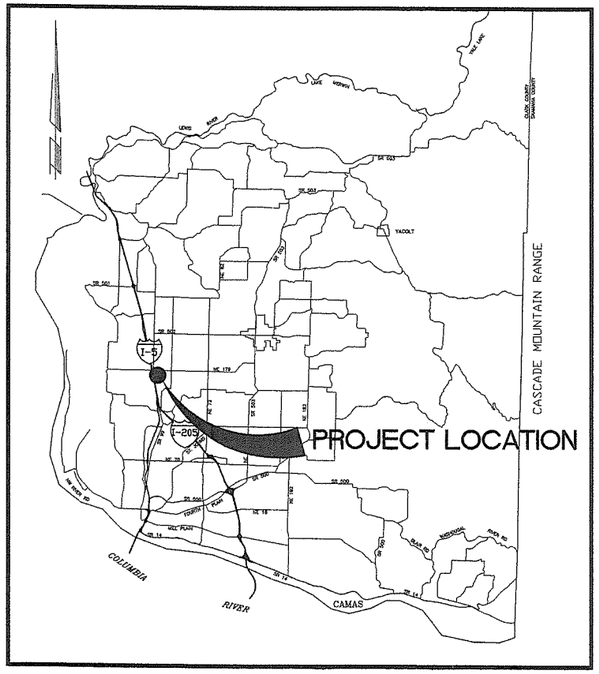

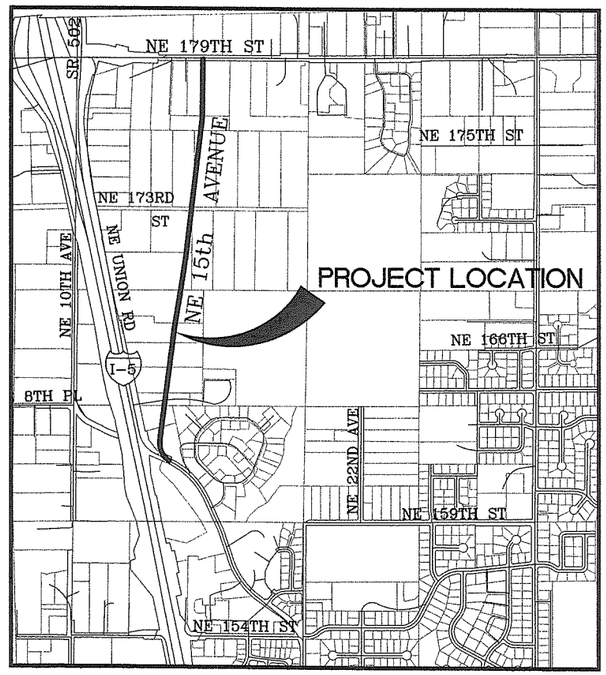

INDEX OF SHEETS

1	A01	COVER SHEET
2	SQ01	SUMMARY, LEGEND AND GENERAL NOTES
3	TS01	TYPICAL SECTIONS, NE 15TH AVE & NE 179TH ST
4	TS02	TYPICAL SECTIONS, NE UNION RD
5	EC01	EROSION CONTROL PLAN, NE 15TH AVE, B.O.P. TO STA 42+00
6	EC02	EROSION CONTROL PLAN, NE 15TH AVE, STA 42+00 TO STA 53+00
7	EC03	EROSION CONTROL PLAN, NE 15TH AVE, STA 53+00 TO STA 58+50
8	EC04	EROSION CONTROL PLAN, NE 15TH AVE, STA 58+50 TO STA 69+00
9	EC05	EROSION CONTROL PLAN, NE 15TH AVE, STA 69+00 TO STA 83+00
10	EC06	EROSION CONTROL PLAN, NE 15TH AVE, STA 83+00 TO E.O.P.
11	EC07	EROSION CONTROL DETAILS
12	NOT USED	
13	D01	DETAILS
14	D03	DETAILS
15	W01	RETAINING WALL
16	W02	RETAINING WALL
17	W03	BLOCK WALL DETAILS
18	PP01	PLAN & PROFILE, NE 15TH AVE, B.O.P. TO STA 39+50
19	PP02	PLAN & PROFILE, NE 15TH AVE, STA 39+50 TO STA 42+50
20	PP03	PLAN & PROFILE, NE 15TH AVE, STA 42+50 TO STA 47+50
21	PP04	PLAN & PROFILE, NE 15TH AVE, STA 47+50 TO STA 52+20
22	PP05	PLAN & PROFILE, NE 15TH AVE, STA 52+20 TO STA 57+10
23	PP06	PLAN & PROFILE, NE 15TH AVE, STA 57+10 TO STA 61+80
24	PP07	PLAN & PROFILE, NE 15TH AVE, STA 61+80 TO STA 66+60
25	PP08	PLAN & PROFILE, NE 15TH AVE, STA 66+60 TO STA 71+50
26	PP09	PLAN & PROFILE, NE 15TH AVE, STA 71+50 TO STA 76+30
27	PP10	PLAN & PROFILE, NE 15TH AVE, STA 76+30 TO 81+00
28	PP11	PLAN & PROFILE, NE 15TH AVE, STA 81+00 TO STA E.O.P.
29	PP12	PLAN & PROFILE, NE UNION RD CUL-DE-SAC
30	DP01	DRAINAGE PLAN, NE 15TH AVE, B.O.P. TO STA 42+50
31	DP02	DRAINAGE PLAN, NE 15TH AVE, STA 42+50 TO STA 47+50
32	DP03	DRAINAGE PLAN, NE 15TH AVE, STA 47+50 TO STA 52+20
33	DP04	DRAINAGE PLAN, NE 15TH AVE, STA 52+20 TO STA 57+10
34	DP05	DRAINAGE PLAN, NE 15TH AVE, STA 57+10 TO STA 61+80
35	DP06	DRAINAGE PLAN, NE 15TH AVE, STA 61+80 TO STA 66+60
36	DP07	DRAINAGE PLAN, NE 15TH AVE, STA 66+60 TO STA 71+50
37	DP08	DRAINAGE PLAN, NE 15TH AVE, STA 71+50 TO STA 76+30
38	DP09	DRAINAGE PLAN, NE 15TH AVE, STA 76+30 TO STA 81+00
39	DP10	DRAINAGE PLAN, NE 15TH AVE, STA 81+00 TO E.O.P.
40	DP12	DRAINAGE PLAN, NE 179TH ST, STA 42+80 TO E.O.P.
41	DP11	DRAINAGE PLAN, NE UNION RD, CUL-DE-SAC
42	DD01	DRAINAGE DETAILS
43	SN01	STRUCTURE NOTES
44	SN02	STRUCTURE NOTES
45	SN03	STRUCTURE NOTES
46	P101	POND 1 PLAN
47	P102	POND 1 DETAILS
48	P201	POND 2 PLAN
49	P202	POND 2 DETAILS
50	P301	POND 3 PLAN
51	P302	POND 3 DETAILS
52	PG01	STORMWATER FACILITIES DETAILS
53	PG02	STORMWATER FACILITIES DETAILS
54	PG03	STORMWATER FACILITIES DETAILS
55	SS01	SIGNING & STRIPING PLAN
56	SS02	SIGNING & STRIPING PLAN
57	SS03	SIGNING & STRIPING PLAN
58	SS04	SIGNING & STRIPING PLAN
59	SS05	SIGNING & STRIPING PLAN
60	I01	INTERSECTION DETAILS
61	I02	INTERSECTION DETAILS
62	L01	LANDSCAPE PLAN
63	L02	LANDSCAPE PLAN
64	L03	LANDSCAPE PLAN
65	L04	LANDSCAPE PLAN
66	L05	LANDSCAPE DETAIL
67	NOT USED	
68		SIGNAL PLAN
69		SIGNAL STANDARD DETAILS
70		TRAFFIC SIGNAL DETAILS
71		TRAFFIC SIGNAL DETAILS
72		TRAFFIC SIGNAL INTERCONNECT CONDUIT PLAN
73		TRAFFIC SIGNAL INTERCONNECT CONDUIT PLAN
		WATER LINE WORK
	W1	NE 15TH AVENUE WATER MAIN
	W2	NE 15TH AVENUE WATER MAIN
	W3	NE 15TH AVENUE WATER MAIN

COMMISSIONERS:

MARC BOLDT, Chair
STEVEN J. STUART, Commissioner
BETTY SUE MORRIS, Commissioner

CLARK COUNTY WASHINGTON

DEPARTMENT OF
PUBLIC WORKS

DESIGN AND ENGINEERING DIVISION- DESIGN SECTION

ENG # 2000-00053

EDWARD J. BLODGETT
STATE OF WASHINGTON
14584
REGISTERED
PROFESSIONAL ENGINEER
EXPIRES 5/4/2007

Quality Assurance	Project Manager	Public Works Director/ County Engineer
1-9-06 DATE:	1-12-06 DATE:	1-12-06 DATE:
Michael M. Emrick, P.E.	for Robert E. Rogers	for Peter Capell, P.E.

CLARK COUNTY WASHINGTON
Recommended for Approval
Grading WCW 1-5-06 Erosion WCW 1-5-06
Storm Water Plan WCW 1-5-06
Development Review Manager 1/05/2006 Date

LEGEND

- ROW LINE
- NEW EDGE OF PAVEMENT
- NEW CURB LINE
- NEW CENTER LINE
- NEW FENCE LINE
- NEW STORM DRAIN OR CULVERT
- NEW FILL LIMITS
- NEW CUT LIMITS
- PERMANENT SLOPE EASEMENT
- NEW SILT FENCE
- EXISTING EDGE OF PAVEMENT
- EXISTING CURB LINE
- EXISTING CENTER LINE
- EXISTING FENCE LINE
- EXISTING TELEPHONE LINE
- EXISTING WATER LINE
- EXISTING UNDERGROUND ELECTRIC
- EXISTING SANITARY SEWER LINE
- EXISTING STORM DRAINAGE
- EXISTING GAS LINE
- EXISTING CULVERT
- EXISTING DITCH CENTER LINE
- EXISTING GUARDRAIL

SYMBOLS

- NEW CATCH BASIN (CB)
- NEW MANHOLE (MH)
- NEW CURB INLET (CI)
- NEW COMBINATION CURB INLET (CCI)
- NEW MAIL BOX
- NEW HANDICAP RAMP
- CURVE TABLE
- EXISTING TRANSFORMER
- EXISTING ELEC TOWER
- EXISTING SANITARY SEWER MH
- EXISTING FIRE HYDRANT
- EXISTING CLEAN OUT
- EXISTING GAS VALVE
- EXISTING WATER METER
- EXISTING WATER VALVE
- EXISTING SIGNAL POLE
- EXISTING TELEPHONE VAULT
- EXISTING TELEVISION BOX
- EXISTING WELL
- EXISTING CURB OPENING INLET (CI)
- EXISTING CATCH BASIN (CB)
- EXISTING STORM MH
- EXISTING MISC MH
- EXISTING SHRUB
- EXISTING CONIFEROUS TREE
- EXISTING DECIDUOUS TREE
- EXISTING SIGN
- EXISTING DECIDUOUS TREE
- EXISTING J BOX
- EXISTING TELEPHONE MANHOLE
- EXISTING TELEPHONE POLE
- EXISTING LIGHT
- EXISTING GUY ANCHOR
- EXISTING POWER POLE
- EXISTING MAIL BOX
- EXISTING TELEPHONE PEDESTAL
- EXISTING SPRINKLER HEAD
- TRAVERSE POINT
- TEST HOLE
- EXISTING BRUSH LINE
- EXISTING HEDGE
- INLET PROTECTION
- CHECK DAMS
- OVERFLOW STRUCTURE W/ DEBRIS CAGE
- CONTROL STRUCTURE – SPECIAL CATCH BASIN 72" TYPE 2
- ROCK PAD OUTFALL PROTECTION

DESIGNED	HAW
DRAWN	HAW
CRP	382822
HOR.	NONE
VERT.	NONE
DATE	10/31/2005
DWG:	NE15SQ01
SHEET 2	OF 73

CALL 48 HOURS BEFORE YOU DIG
1-800-553-4344
"It's the Law"
NORTHWEST UTILITIES NOTIFICATION CENTER

DESIGN & ENGINEERING DIVISION

NE 15TH AVENUE
SUMMARY OF QUANTITIES

EDWARD J. BLODGETT
STATE OF WASHINGTON
PROFESSIONAL ENGINEER
EXPIRES: 05/04/2007

JACOBS

JACOBS CIVIL INC.
600 108th Avenue NE,
Suite 700
Bellevue, WA 98004
Phone: (425)452-8000
Fax: (425)452-1212

CLARK COUNTY WASHINGTON

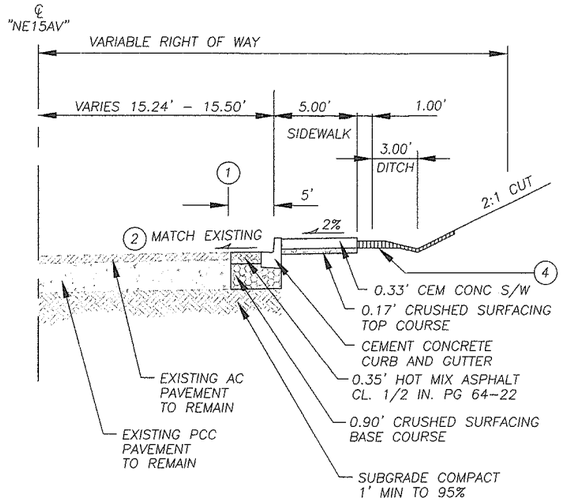

TYPICAL SECTION 1 - NE 15TH AVENUE

STA 37+02.35 TO STA 37+14.00 RT

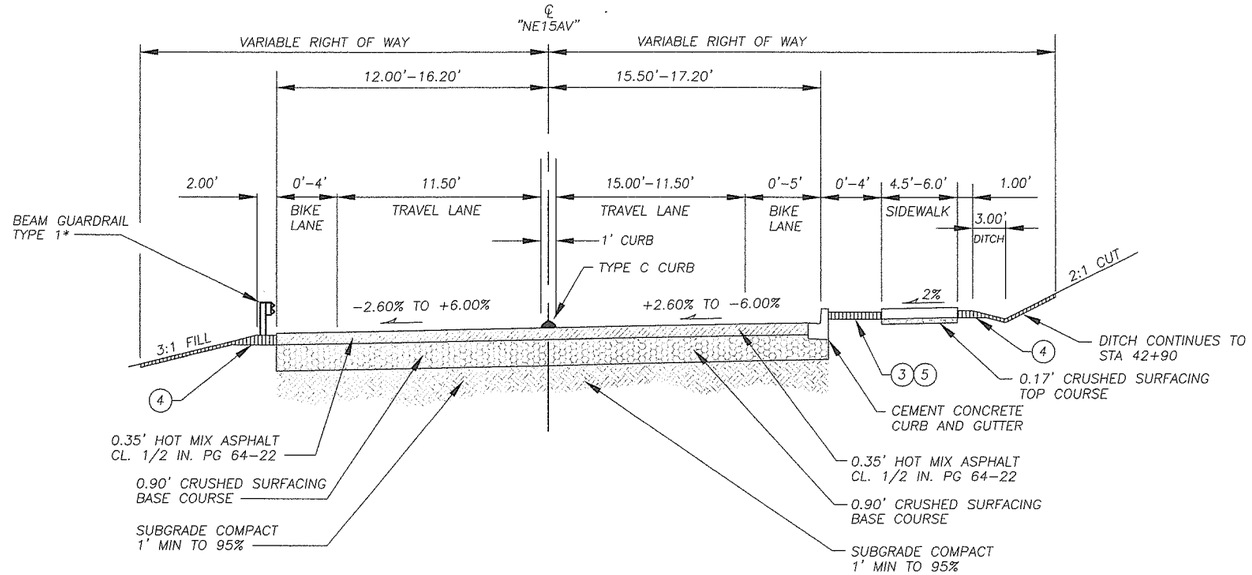

TYPICAL SECTION 2 - NE 15TH AVENUE

STA 37+14.00 TO STA 39+00.00

*SEE PLAN PROFILE DWG PP01 AND STRIPING DWDG SS01 FOR VARIABLE LANE WIDTHS, TAPER RATES, SUPERELEVATION DIAGRAM AND GUARDRAIL LOCATIONS.

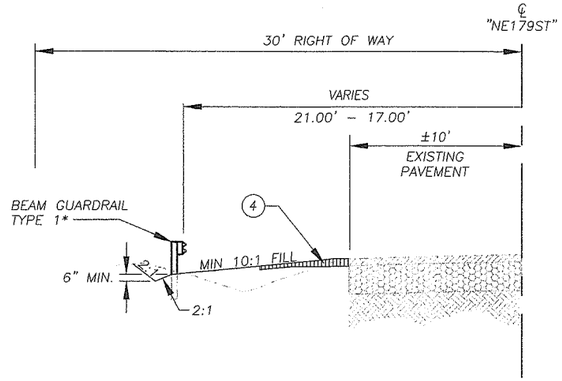

TYPICAL SECTION 3 - NE 179TH STREET

STA 40+50.44 LT TO STA 41+80.84 LT

*SEE PLAN PROFILE SHEET PP11 FOR GUARDRAIL LOCATIONS.

NOTE: EXTEND FILL LIMITS PAST THE ENDS OF GUARDRAIL AS SHOWN IN WSDOT STANDARD PLAN C-4b.

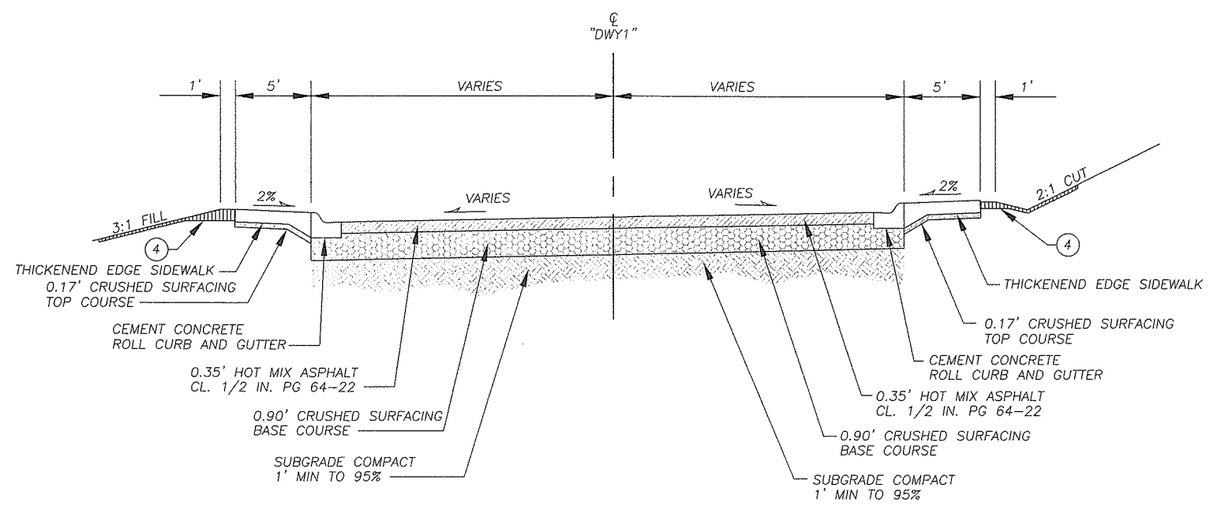

TYPICAL UNION ROAD CUL-DE-SAC

*SEE PLAN PROFILE SHEET PP12 AND INTERSECTION DETAIL SHEET I02 FOR VARIABLE LANE WIDTHS, TAPER RATES, AND CROSS SLOPE INFORMATION.

NOTES:

1. SAWCUT LINE
2. SEE SUPERELEVATION DIAGRAM SHEET PP01, FOR APPROXIMATE CROSS SLOPE.
3. 2" EROSION CONTROL BARK MULCH
4. COMPOST AMENDED TOPSOIL. SEE SPECIAL PROVISIONS FOR APPLICATION RATE.
5. COMPOST AMENDED TOPSOIL AND SOIL PREPARATION.

DESIGNED	HAW
DRAWN	HAW
CRP	382822
HOR.	NONE
VERT.	NONE
DATE	10/31/2005
DWG.	NE15TS01
SHEET 3	OF 73

CALL 48 HOURS BEFORE YOU DIG 1-800-553-4344 "It's the Law" NORTHWEST UTILITIES NOTIFICATION CENTER

DESIGN & ENGINEERING DIVISION

NE 15TH AVENUE TYPICAL SECTIONS

STATE OF WASHINGTON HEATHER A. WERNA REGISTERED PROFESSIONAL ENGINEER 38822 11/12/05 EXP.DEC.31 11/08/06

JACOBS

JACOBS CIVIL INC.
600 108th Avenue NE, Suite 700
Bellevue, WA 98004
Phone: (425)452-8000
Fax: (425)452-1212

CLARK COUNTY WASHINGTON

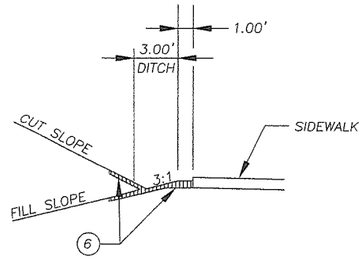

TYPICAL DITCH SECTION (8)

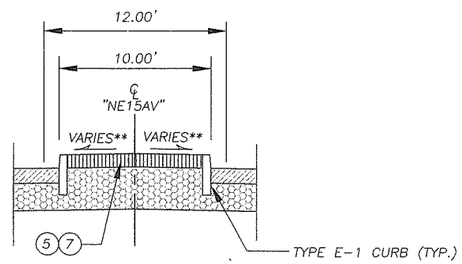

TYPICAL MEDIAN SECTION

*SEE PLAN PROFILE SHEETS AND MEDIAN/LEFT TURN LANE TRANSITION DETAIL FOR MEDIAN LOCATIONS.
**MEDIAN PLANTER CROSS SLOPE TO MATCH ROADWAY CROSS SLOPE. SEE SUPERELEVATION DIAGRAMS ON PLAN PROFILE SHEETS.

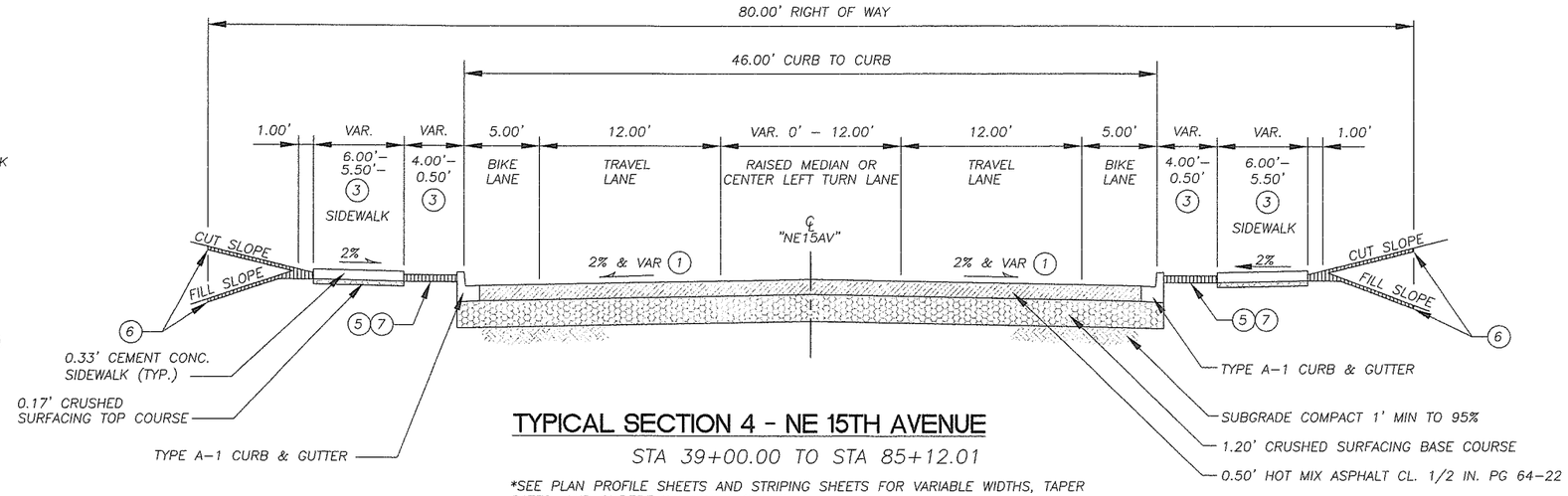

TYPICAL SECTION 4 - NE 15TH AVENUE

STA 39+00.00 TO STA 85+12.01

*SEE PLAN PROFILE SHEETS AND STRIPING SHEETS FOR VARIABLE WIDTHS, TAPER RATES, AND SUPERELEVATION DIAGRAMS.

	CUTS	FILLS (2)
STA 37+02.35 TO STA 44+00.00	2:1	3:1
STA 44+50.00 TO STA 47+50.00	2:1	2:1
STA 48+00.00 TO STA 56+50.00	4:1*	2:1
STA 57+00.00 TO STA 58+50.00	2:1	2:1
STA 59+00.00 TO STA 63+00.00	4:1	3:1
STA 63+50.00 TO STA 66+50.00	2:1	2:1
STA 67+00.00 TO STA 84+50.61	4:1	3:1

*2:1 CUT SLOPE FROM 49+50 TO 50+65, LEFT; AND FROM 54+80 TO 56+00, LEFT.

NOTES:

1. SEE SUPERELEVATION DIAGRAMS, DWGS PP01, PP02 AND PP03.
2. GAPS IN STATIONING ARE SLOPE TRANSITIONS.
3. SEE PLAN VIEWS FOR LOCATIONS OF MEANDERING.
4. SECTION SHOWS FUTURE IMPROVEMENTS AND HAS BEEN EXTRACTED FROM CLARK COUNTY PROJECT NO. 381122.
5. 2" EROSION CONTROL BARK MULCH.
6. COMPOSTED AMENDED TOPSOIL. SEE SPECIAL PROVISIONS FOR APPLICATION RATE.
7. COMPOSTED AMENDED TOPSOIL AND SOIL PREPARATION.
8. DITCH TO BE CONSTRUCTED IN CUT SECTIONS FROM STATION 38+50 TO STATION 45+75.

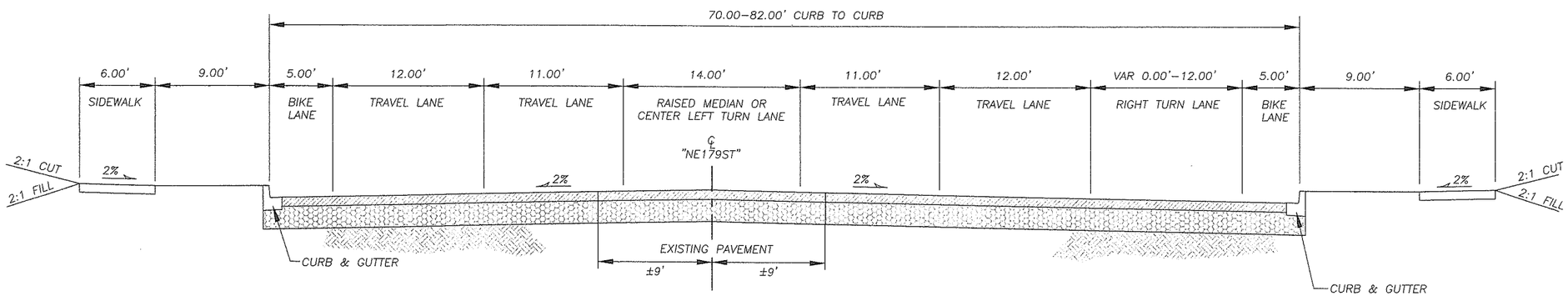

TYPICAL SECTION 5 - NE 179TH STREET (4)

STA 34+60.00 TO STA 40+52.47

FUTURE SECTION IS SHOWN FOR INFORMATIONAL PURPOSES ONLY AND IS NOT INCLUDED IN CONSTRUCTION.

DESIGNED HAW
DRAWN HAW
CRP 382822
HOR. NONE
VERT. NONE
DATE 01/03/2005
DWG. NE15TS02
SHEET 4 OF 73

CALL 48 HOURS BEFORE YOU DIG 1-800-553-4344 "It's the Law" NORTHWEST UTILITIES NOTIFICATION CENTER

DESIGN & ENGINEERING DIVISION

NE 15TH AVENUE
TYPICAL SECTIONS

BRAD WEEKS STATE OF WASHINGTON 22303 PROFESSIONAL ENGINEER
EXPIRES: 11/08/06

JACOBS
JACOBS CIVIL INC.
600 108th Avenue NE, Suite 700
Bellevue, WA 98004
Phone: (425)452-8000
Fax: (425)452-1212

CLARK COUNTY WASHINGTON

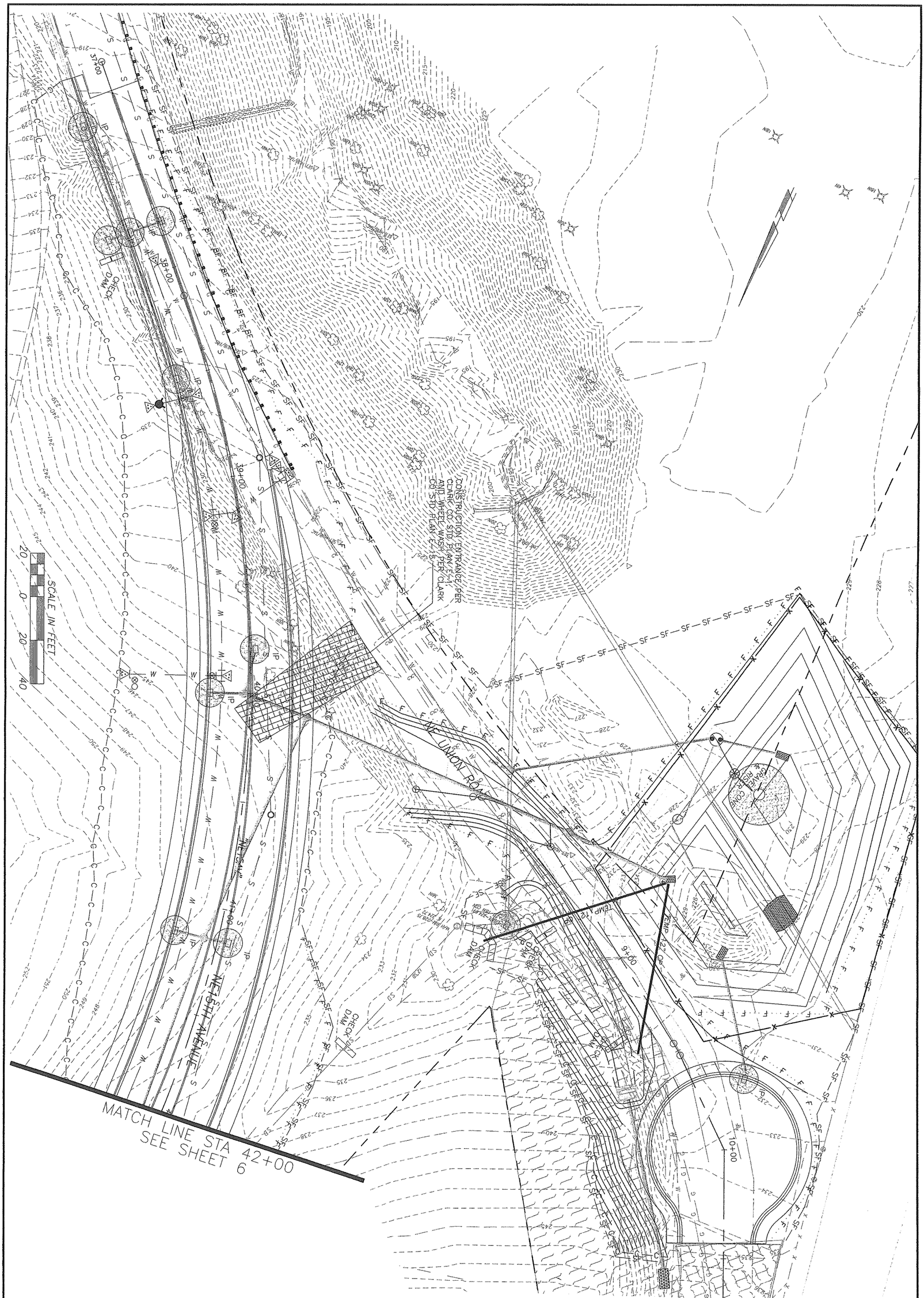

CLARK COUNTY WASHINGTON

JACOBS

JACOBS CIVIL INC.
600 108th Avenue NE,
Suite 700
Bellevue, WA 98004
Phone: (425)452-8000
Fax: (425)452-1212

WILLIAM BURKE MICKEY
STATE OF WASHINGTON
34300
REGISTERED
PROFESSIONAL ENGINEER
12/21/05
EXPIRES: 04/25/07

DESIGN & ENGINEERING DIVISION

NE 15TH AVENUE
EC PLAN B.O.P. TO STA 42+00

CALL 48 HOURS BEFORE YOU DIG
1-800-553-4344
"It's the Law"
NORTHWEST UTILITIES NOTIFICATION CENTER

DESIGNED	WBH
DRAWN	WBH
CRP	382822
HOR.	1" = 20'
VERT.	1" = 5'
DATE	10/31/2005
DWG:	NE15EC01
SHEET 5	OF 73

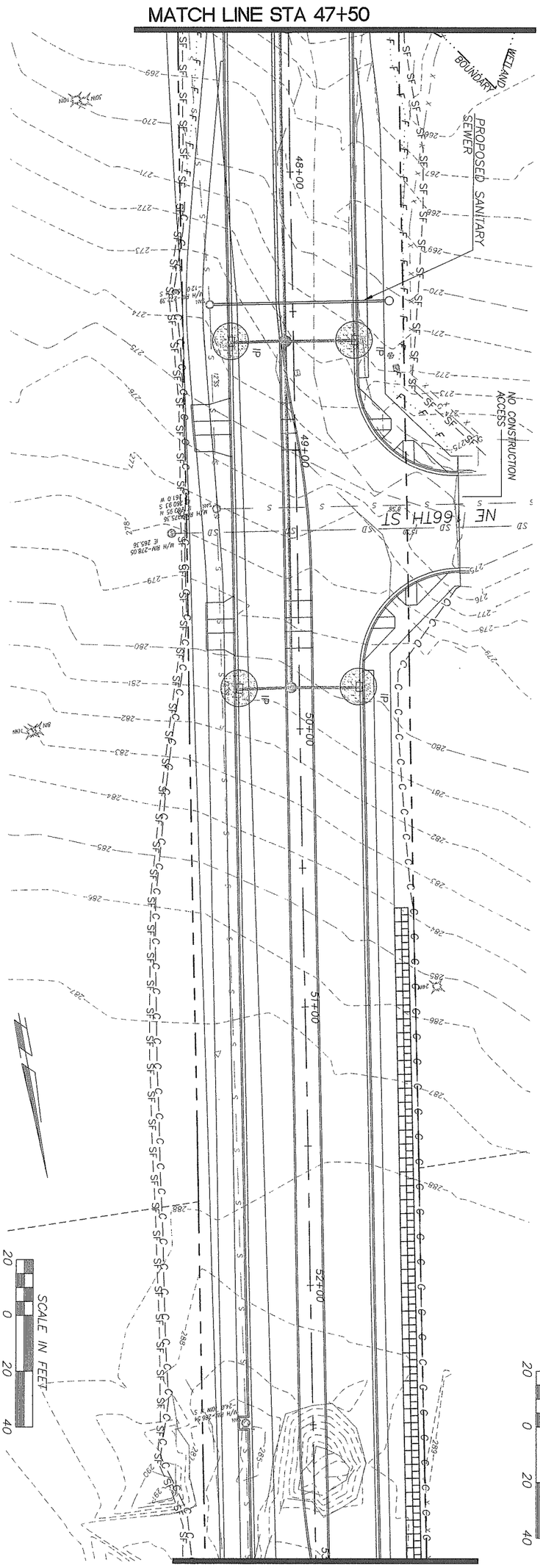

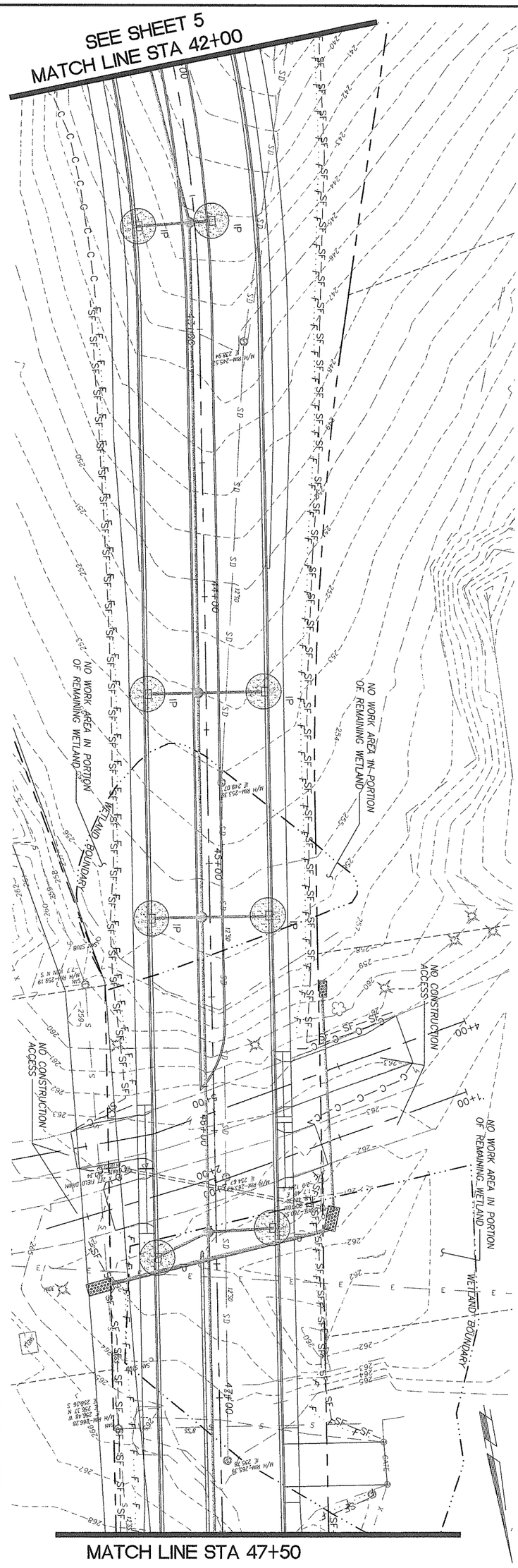

CLARK COUNTY WASHINGTON

JACOBS

JACOBS CIVIL INC.
600 108th Avenue NE,
Suite 700
Bellevue, WA 98004
Phone: (425)452-8000
Fax: (425)452-1212

WILLIAM BURKE HICKEY
STATE OF WASHINGTON
REGISTERED PROFESSIONAL ENGINEER
EXPIRES: 04/25/07

DESIGN & ENGINEERING DIVISION

NE 15TH AVENUE
EC PLAN STA 42+00 TO 53+00

CALL 48 HOURS BEFORE YOU DIG
1-800-553-4344
"It's the Law"
NORTHWEST UTILITIES NOTIFICATION CENTER

DESIGNED	TJN
DRAWN	TJN
CRP	382822
HOR.	1" = 20'
VERT.	N/A
DATE	10/31/2005
DWG:	NE15EC02
SHEET 6	OF 73

SEE SHEET 6
MATCH LINE STA 53+00

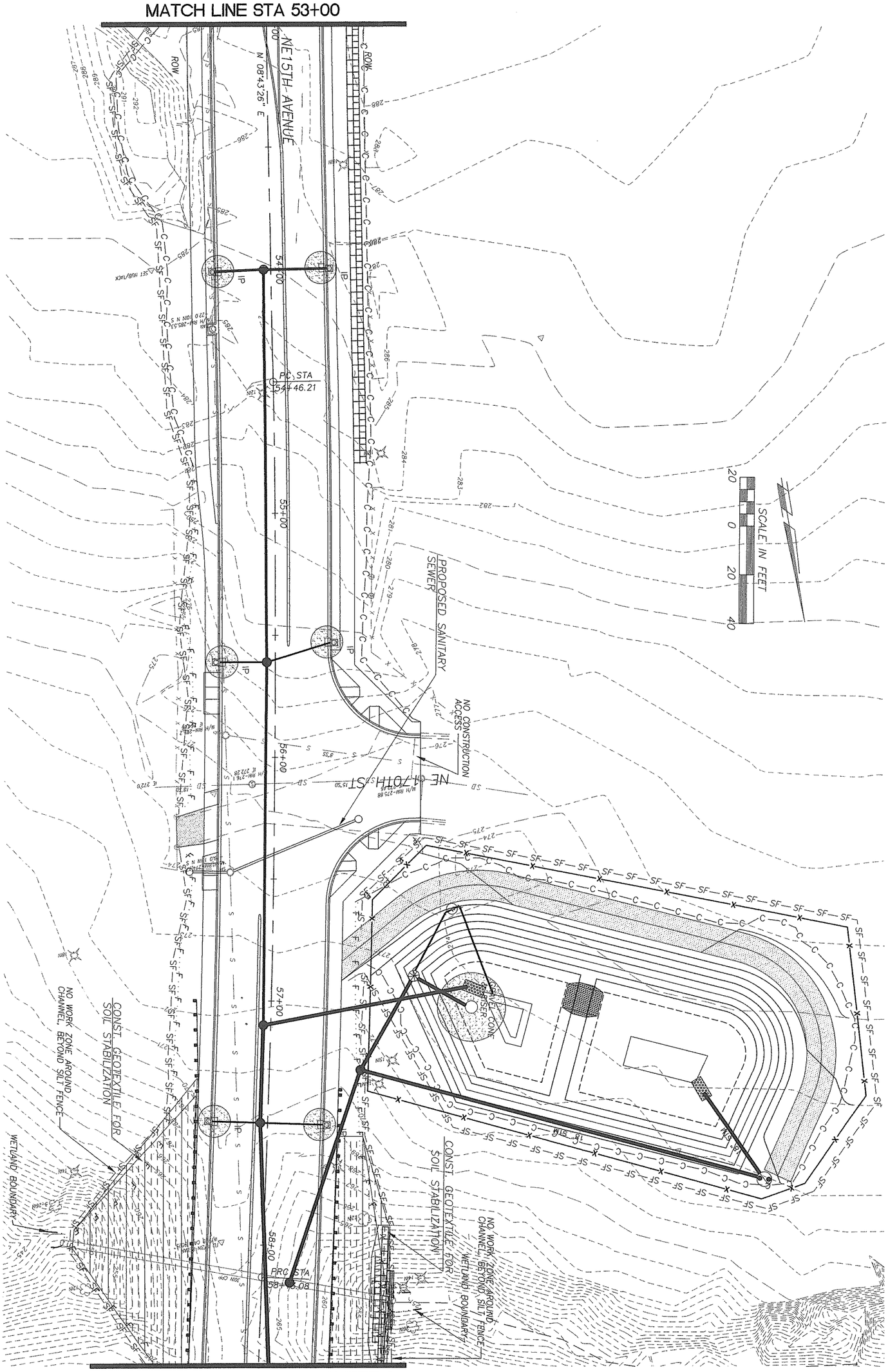

MATCH LINE STA 58+50, SEE SHEET 8

CLARK COUNTY WASHINGTON

JACOBS

JACOBS CIVIL INC.
600 108th Avenue NE,
Suite 700
Bellevue, WA 98004
Phone: (425)452-8000
Fax: (425)452-1212

WILLIAM BURKE HICKEY
STATE OF WASHINGTON
35200
REGISTERED PROFESSIONAL ENGINEER
12/4/05
EXPIRES: 04/25/07

DESIGN & ENGINEERING DIVISION

NE 15TH AVENUE
EC PLAN STA 53+00 TO 58+00

CALL 48 HOURS BEFORE YOU DIG
1-800-553-4344
"It's the Law"
NORTHWEST UTILITIES NOTIFICATION CENTER

DESIGNED	PR
DRAWN	PR
CRP	382822
HOR.	1" = 20'
VERT.	N/A
DATE	10/31/2005
DWG:	NE15EC03
SHEET	7 OF 73

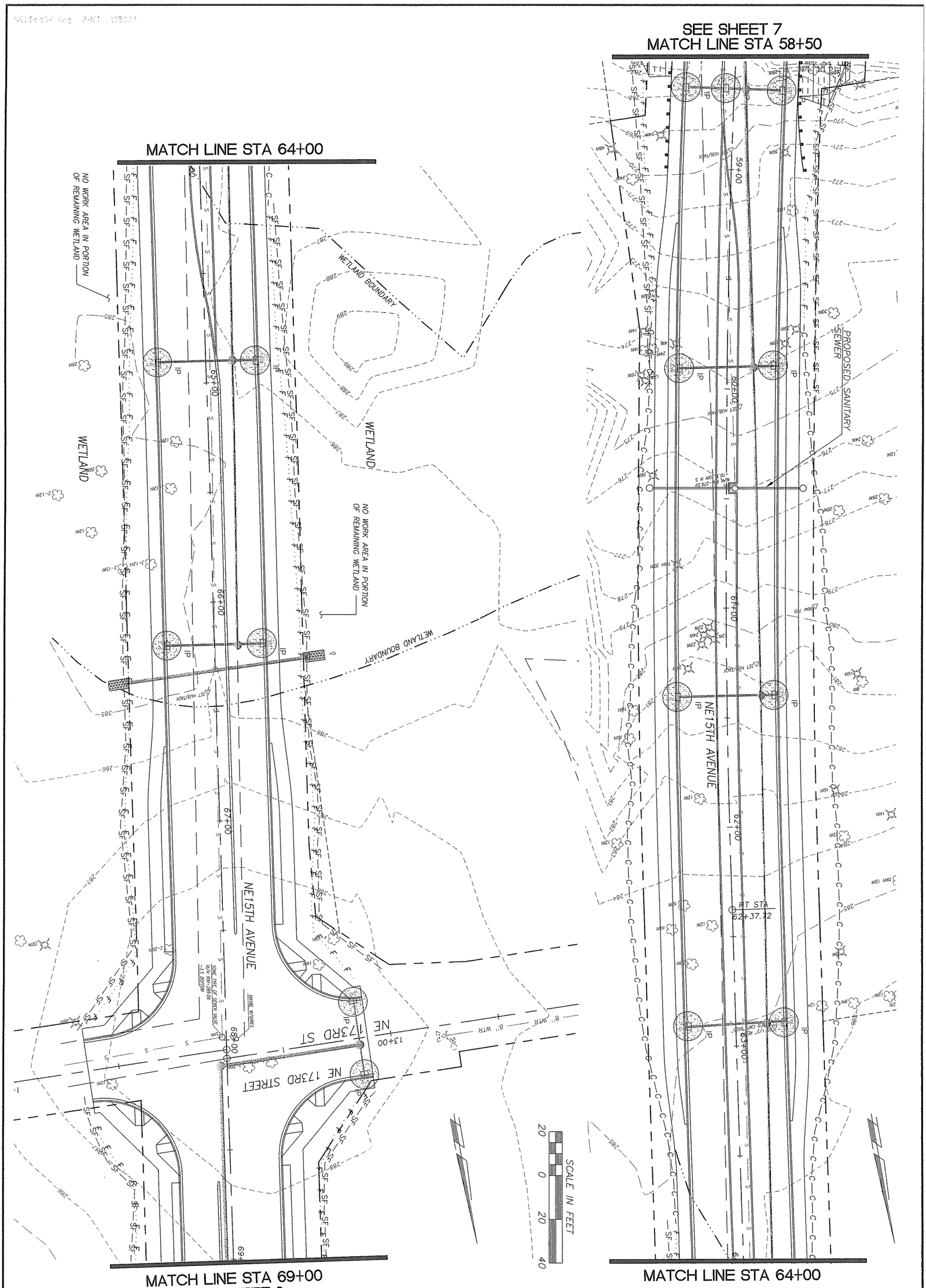

CLARK COUNTY WASHINGTON

JACOBS
JACOBS CIVIL INC.
600 108th Avenue NE,
Suite 700
Bellevue, WA 98004
Phone: (425)452-8000
Fax: (425)452-1212

WILLIAM BURKE HICKEY
STATE OF WASHINGTON
33320
REGISTERED PROFESSIONAL ENGINEER
12/21/05
EXPIRES: 04/25/07

DESIGN & ENGINEERING DIVISION

NE 15TH AVENUE
EC PLAN STA 58+50 TO 69+00

CALL 48 HOURS BEFORE YOU DIG
1-800-553-4344
"It's the Law"
NORTHWEST UTILITIES NOTIFICATION CENTER

DESIGNED	TJN
DRAWN	TJN
CRP	382822
HOR.	1" = 20'
VERT.	N/A
DATE	10/31/2005
DWG:	NE15EC04
SHEET 8	OF 73

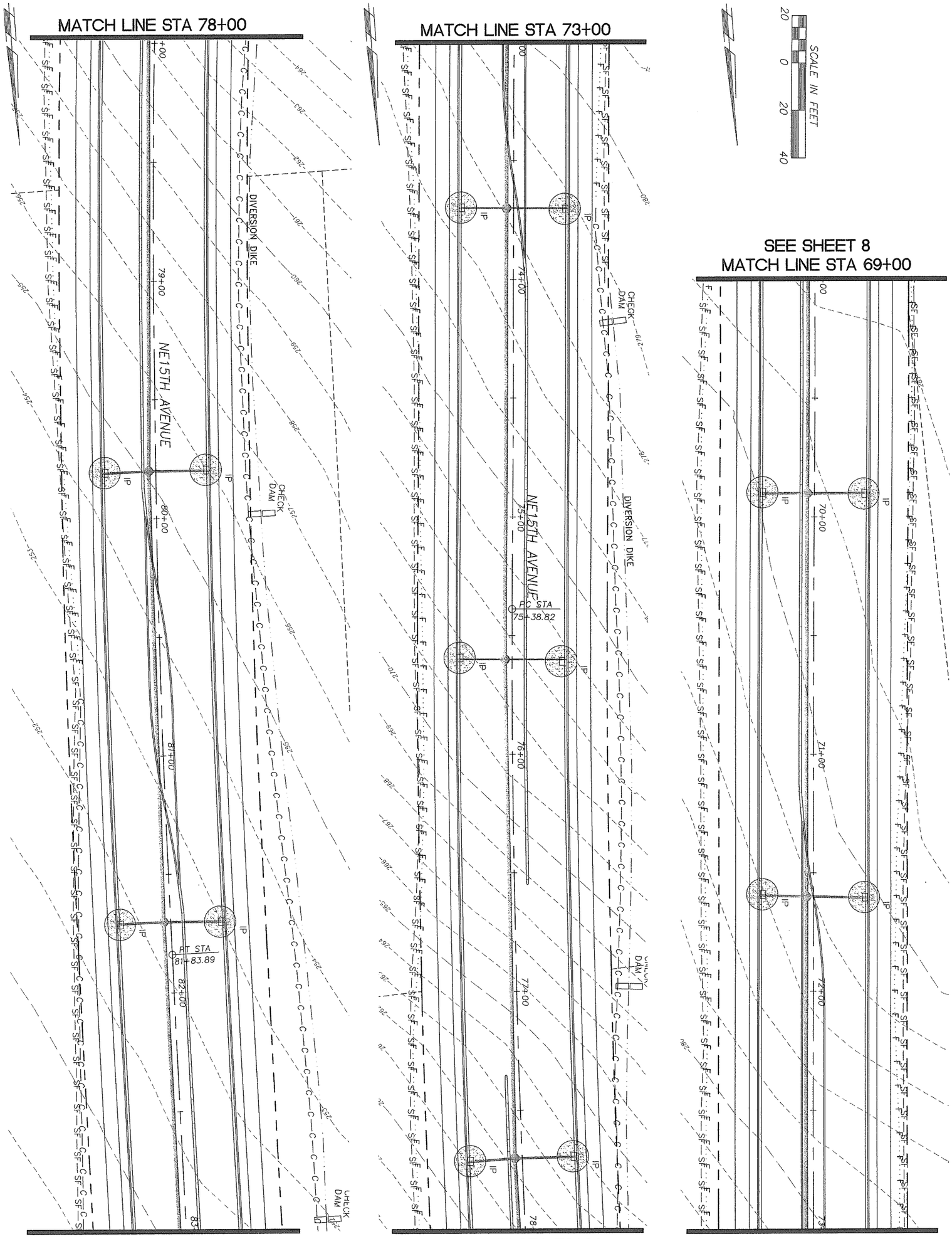

CLARK COUNTY WASHINGTON

JACOBS

JACOBS CIVIL INC.
600 108th Avenue NE,
Suite 700
Bellevue, WA 98004
Phone: (425)452-8000
Fax: (425)452-1212

WILLIAM BURKE LUCKEY
STATE OF WASHINGTON
32090
REGISTERED
PROFESSIONAL ENGINEER
10/31/05
EXPIRES: 04/25/07

DESIGN & ENGINEERING DIVISION

NE 15TH AVENUE
EC PLAN STA 69+00 TO 83+00

CALL 48 HOURS BEFORE YOU DIG
1-800-553-4344
"It's the Law"
NORTHWEST UTILITIES NOTIFICATION CENTER

DESIGNED	TJN
DRAWN	TJN
CRP	382822
HOR.	1" = 20'
VERT.	N/A
DATE	10/31/2005
DWG:	NE15EC05
SHEET 9	OF 73

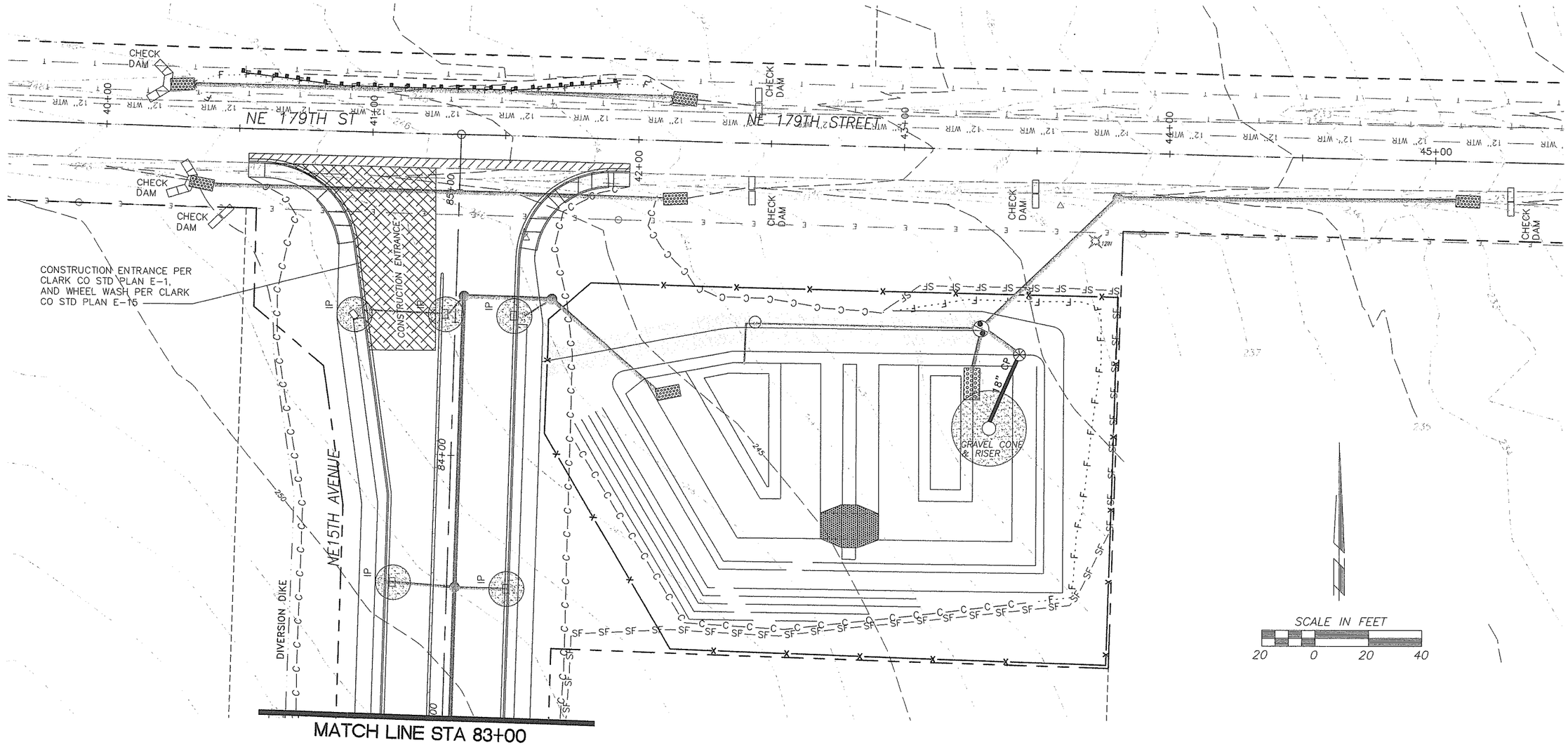

DESIGNED	TJN
DRAWN	TJN
CRP	382822
HOR.	1" = 20'
VERT.	N/A
DATE	10/31/2005
DWG.	NE15EC06
SHEET	10 OF 73

CALL 48 HOURS BEFORE YOU DIG 1-800-553-4344 "It's the Law" NORTHWEST UTILITY NOTIFICATION CENTER

DESIGN & ENGINEERING DIVISION

NE 15TH AVENUE
EC PLAN STA 83+00 TO E.O.P.

BURRE HICKEY WILLIAM STATE OF WASHINGTON REGISTERED PROFESSIONAL ENGINEER
EXPIRES: 04/25/07

JACOBS

JACOBS CIVIL INC.
600 108th Avenue NE,
Suite 700
Bellevue, WA 98004
Phone: (425)452-8000
Fax: (425)452-1212

CLARK COUNTY WASHINGTON

EROSION CONTROL NOTES

1. SEE CLARK CO STD DETAILS ECN1 AND ECN2 FOR STANDARD NOTES FOR EROSION CONTROL PLAN.
2. SEE CLARK CO EROSION CONTROL STANDARD DETAILS FOR EROSION CONTROL DETAILS, INLET PROTECTION, STRAW BALE BARRIERS, CONSTRUCTION ENTRANCES, SEDIMENT FENCE.

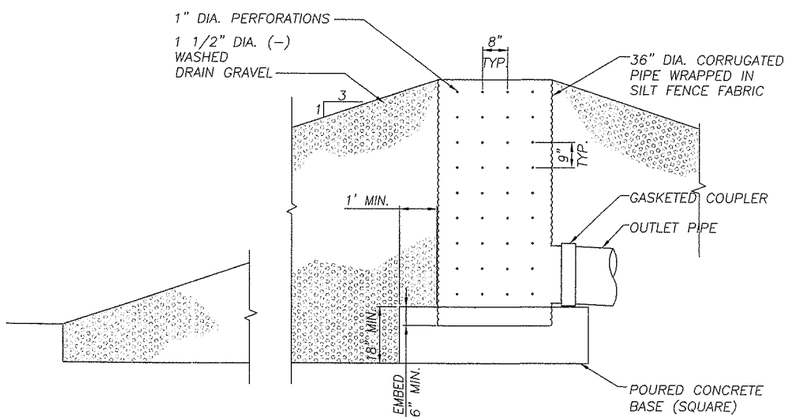

GRAVEL CONE AND RISER

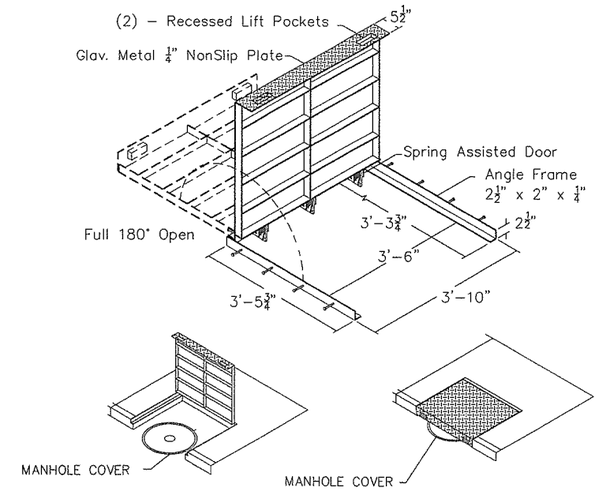

NOTES:
1. FRAME DESIGNED TO BE CAST IN CONCRETE
2. DESIGNED FOR PEDISTRIAN TRAFFIC ONLY
3. FRAME AND COVER TO BE INSTALLED AS ONE UNIT
4. FINISH: HOT DIP GALVANIZED

UTILITY ACCESS FRAME & DOOR

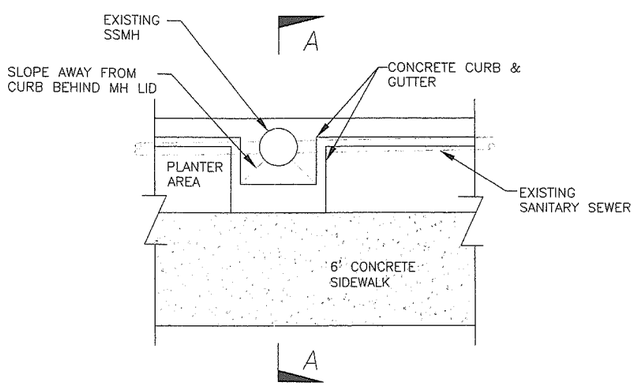

PLAN
NTS

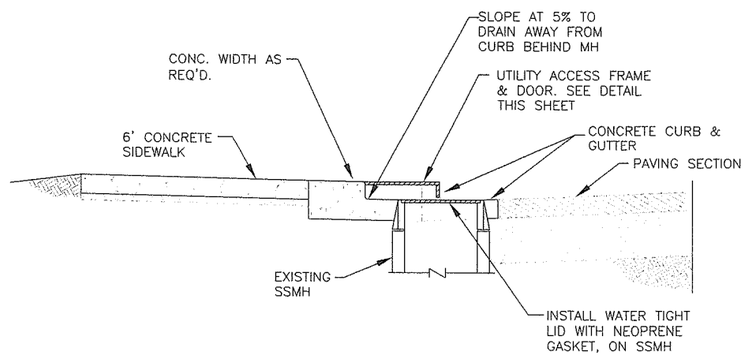

SECTION AA
NTS

CURB RECESSION DETAIL

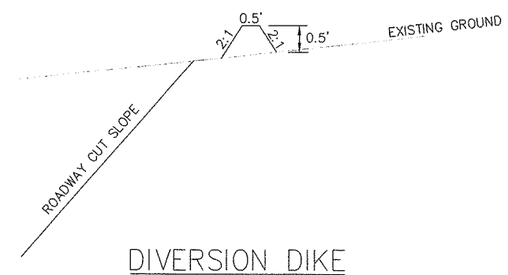

DIVERSION DIKE
NTS

P:\W1427900\10900\700CADD\NE15EC08.DWG

DESIGNED TJN
DRAWN DMO
CRP 382822
HOR. NONE
VERT. NONE
DATE 10/31/2005
DWG: NE15EC07
SHEET 11 OF 73

CALL 48 HOURS BEFORE YOU DIG 1-800-553-4344 "It's the Law" NORTHWEST UTILITIES NOTIFICATION CENTER

DESIGN & ENGINEERING DIVISION

NE 15TH AVENUE
EROSION CONTROL DETAILS

WILLIAM BURKE HICKEY STATE OF WASHINGTON PROFESSIONAL ENGINEER
EXPIRES: 04/25/07

JACOBS
JACOBS CIVIL INC.
600 108th Avenue NE, Suite 700
Bellevue, WA 98004
Phone: (425)452-8000
Fax: (425)452-1212

CLARK COUNTY WASHINGTON

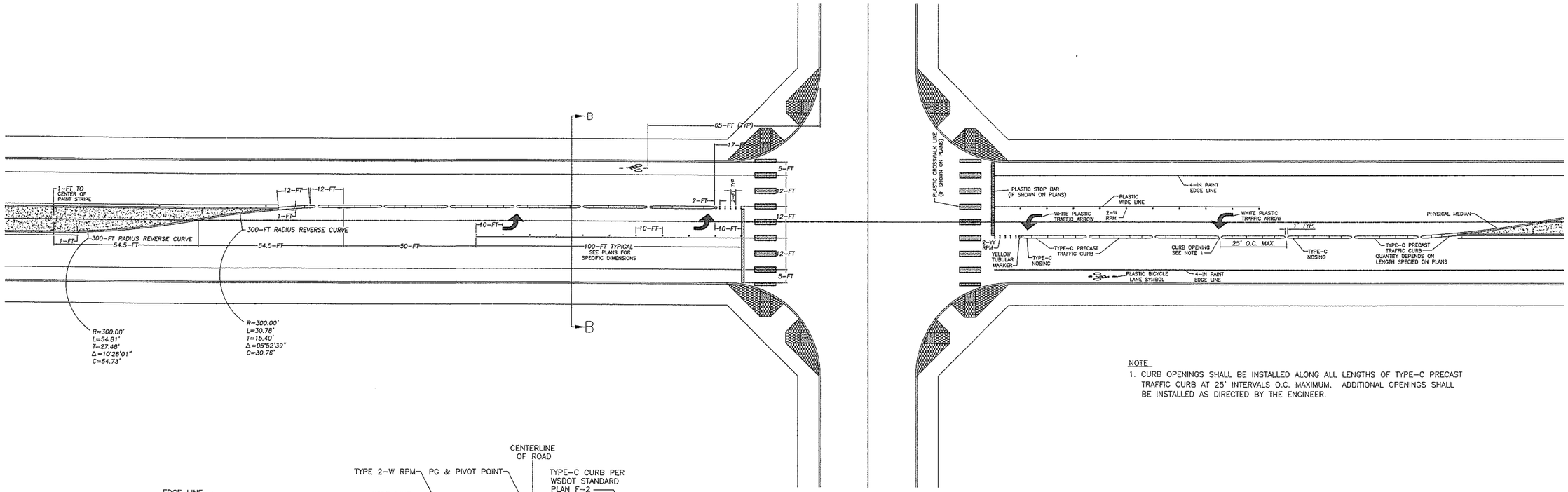

NOTE

1. CURB OPENINGS SHALL BE INSTALLED ALONG ALL LENGTHS OF TYPE-C PRECAST TRAFFIC CURB AT 25' INTERVALS O.C. MAXIMUM. ADDITIONAL OPENINGS SHALL BE INSTALLED AS DIRECTED BY THE ENGINEER.

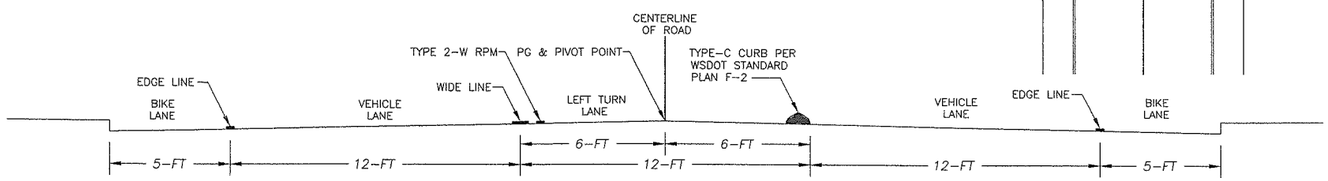

SECTION B-B

MEDIAN/LEFT TURN LANE TRANSITION TYPICAL DETAIL

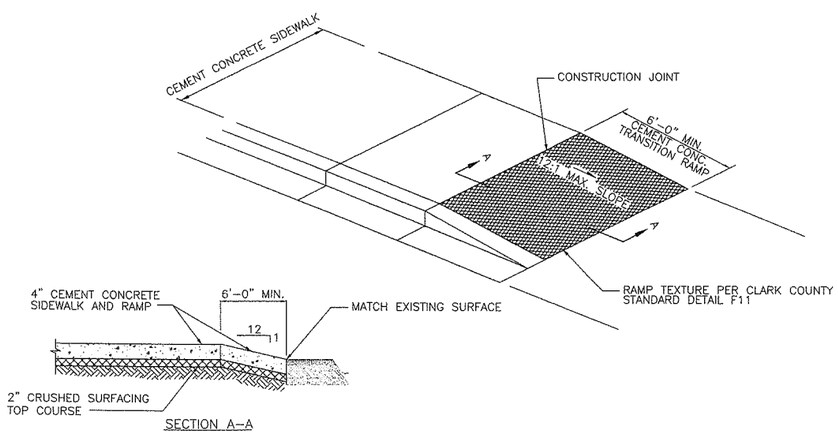

SIDEWALK TRANSITION DETAIL

DESIGNED	HAW
DRAWN	HAW
CRP	382822
HOR.	NONE
VERT.	NONE
DATE	10/31/2005
DWG.	NE15D01
SHEET	13 OF 73

CALL 48 HOURS BEFORE YOU DIG 1-800-553-4344 "It's the Law" NORTHWEST UTILITIES NOTIFICATION CENTER

DESIGN & ENGINEERING DIVISION

NE 15TH AVENUE DETAILS

STATE OF WASHINGTON PROFESSIONAL ENGINEER

EXPIRES: 11/08/06

JACOBS

JACOBS CIVIL INC.
600 108th Avenue NE,
Suite 700
Bellevue, WA 98004
Phone: (425)452-8000
Fax: (425)452-1212

CLARK COUNTY WASHINGTON

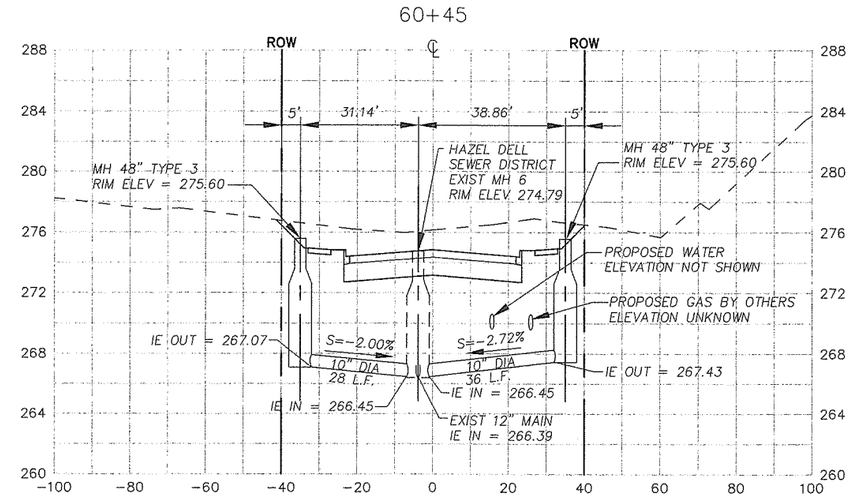

SEWER STUB-OUT
DETAIL

DESIGNED WBH
DRAWN WBH
CRP 382822
HOR. 1" = 20'
VERT. 1" = 5'
DATE 01/03/2006
DWG. NE15003
SHEET 14 OF 73

CALL 48 HOURS BEFORE YOU DIG
1-800-553-4344
"It's the Law"
NORTHWEST UTILITIES NOTIFICATION CENTER

DESIGN & ENGINEERING DIVISION

NE 15TH AVENUE
DETAILS

EDWARD J. BLODGETT
STATE OF WASHINGTON
REGISTERED PROFESSIONAL ENGINEER
EXPIRES: 03/04/2007

JACOBS

JACOBS CIVIL INC.
600 108th Avenue NE,
Suite 700
Bellevue, WA 98004
Phone: (425)452-8000
Fax: (425)452-1212

CLARK COUNTY WASHINGTON

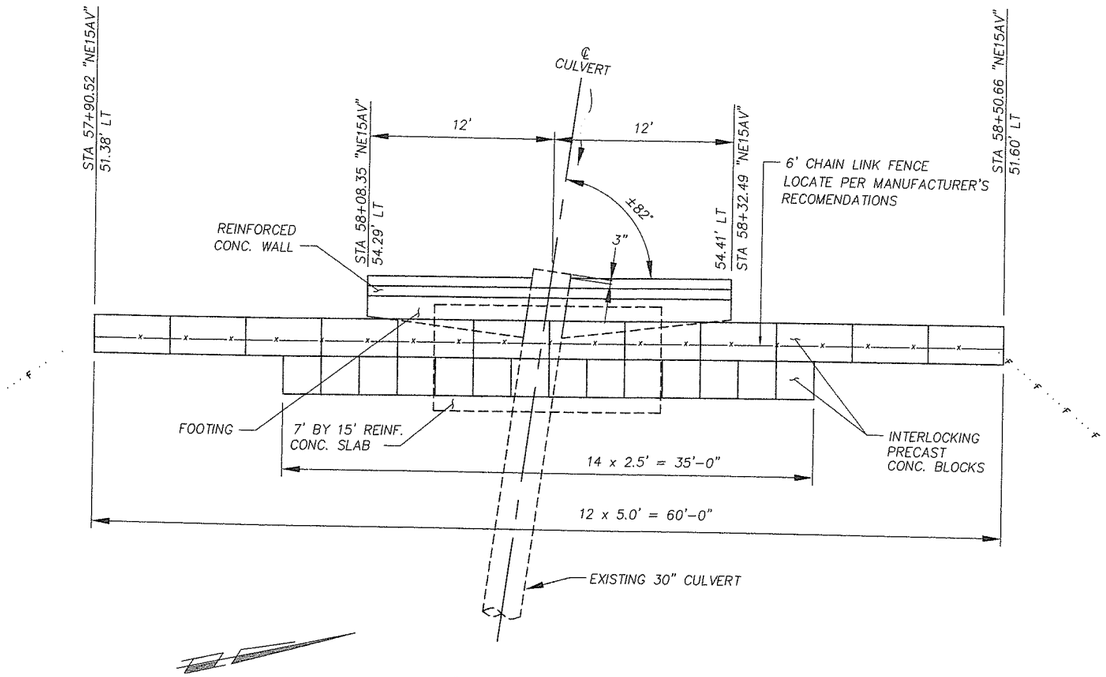

PLAN

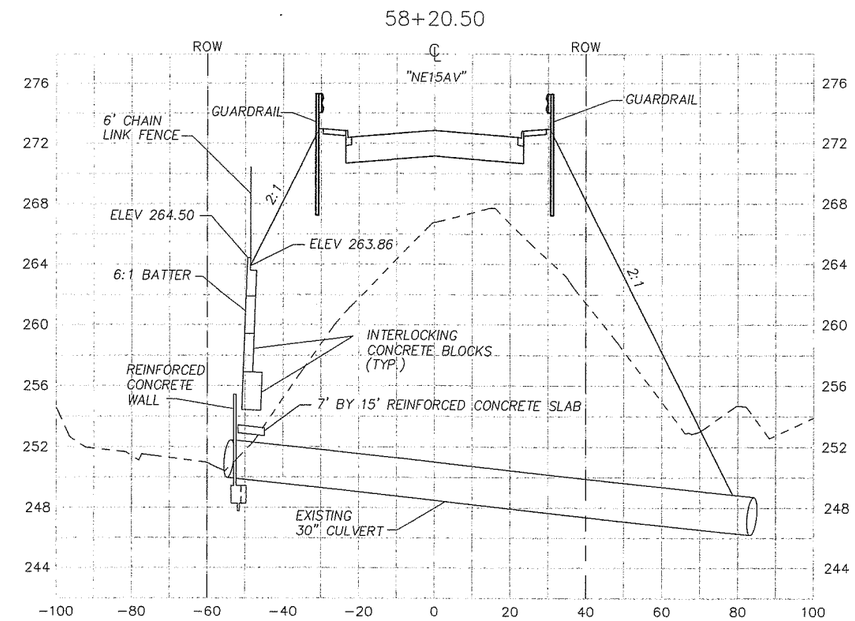

ROADWAY CROSS SECTION

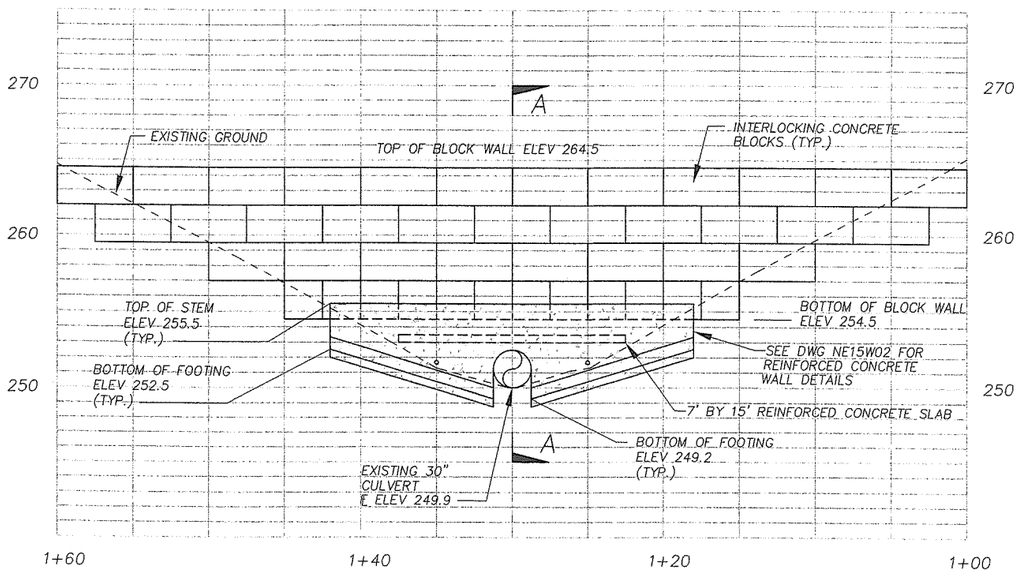

ELEVATION

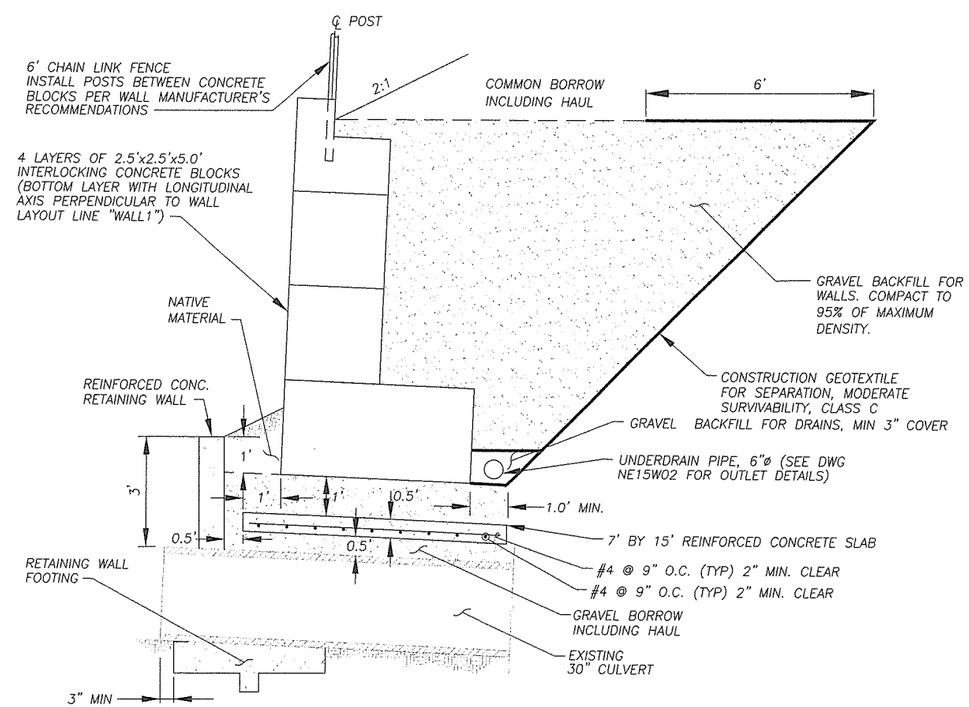

SECTION A–A

DESIGNED	PR
DRAWN	PR
CRP	382822
HOR.	NONE
VERT.	NONE
DATE	10/31/2005
DWG:	NE15W01
SHEET 15	OF 73

CALL 48 HOURS BEFORE YOU DIG 1-800-553-4344 "It's the Law" NORTHWEST UTILITIES NOTIFICATION CENTER

DESIGN & ENGINEERING DIVISION

NE 15TH AVENUE RETAINING WALL

EDWARD J. BLODGETT STATE OF WASHINGTON 14858 REGISTERED PROFESSIONAL ENGINEER

EXPIRES: 05/04/2007

JACOBS

JACOBS CIVIL INC.
600 108th Avenue NE,
Suite 700
Bellevue, WA 98004
Phone: (425)452-8000
Fax: (425)452-1212

CLARK COUNTY WASHINGTON

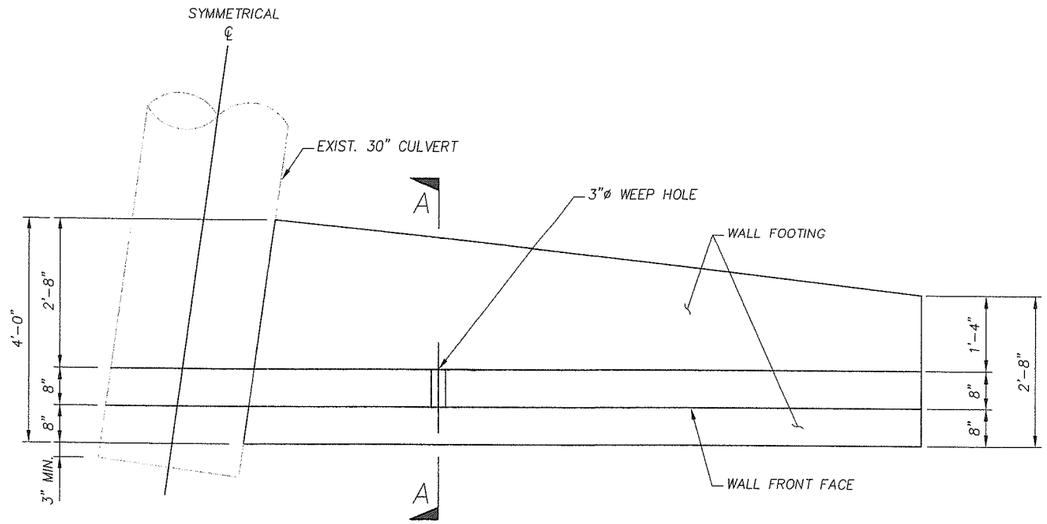

PLAN

NOTES:

1. MINIMUM 1-1/2" CLEARANCE UNLESS OTHERWISE NOTED.
2. NO WORK, ACCESS OR GROUND DISTURBANCE PERMITTED UPSTREAM OF PIPE INLET.
3. MAINTAIN FLOW THROUGH CULVERT AT ALL TIMES.

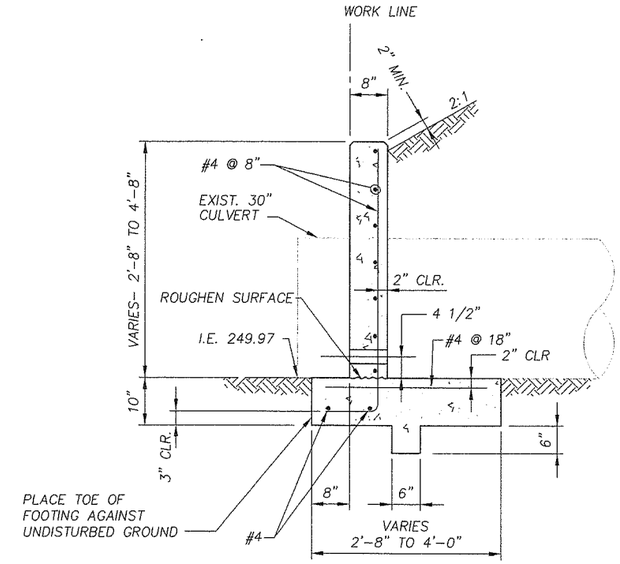

SECTION A-A

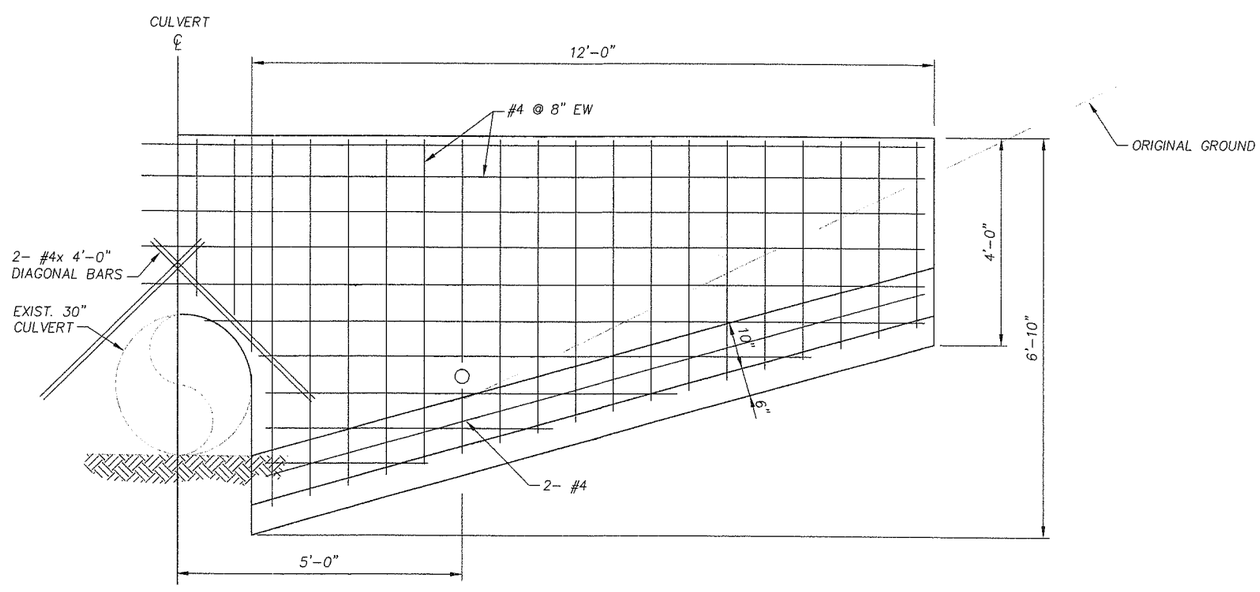

ELEVATION

(NORTH OF CULVERT SIMILAR)

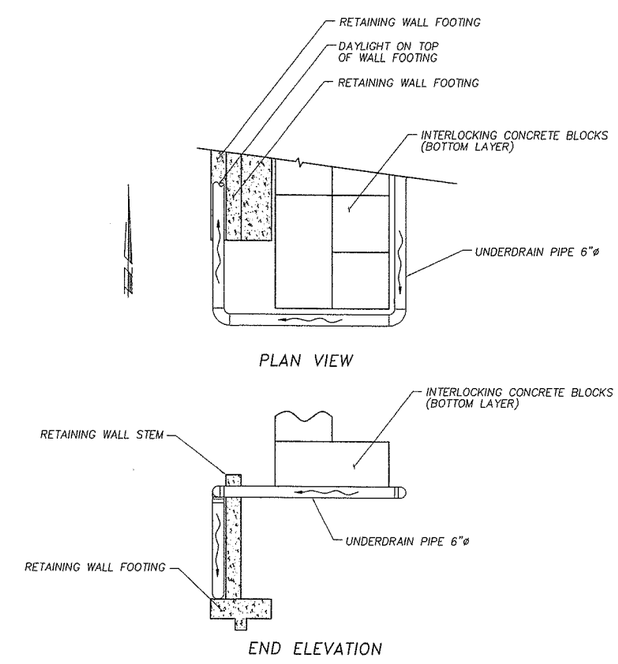

UNDERDRAIN OUTFALL DETAIL

(OPPOSITE END SIMILAR)

N.T.S.

DESIGNED PR
DRAWN EPS
CRP 382822
HOR. 3/4"=1'
VERT. 3/4"=1'
DATE 10/31/2005
DWG: NE15W02
SHEET 16 OF 73

CALL 48 HOURS BEFORE YOU DIG
1-800-553-4344
"It's the Law"
NORTHWEST UTILITIES NOTIFICATION CENTER

DESIGN & ENGINEERING DIVISION

NE 15TH AVENUE
RETAINING WALL DETAILS

EDWARD J. BLODGETT
STATE OF WASHINGTON
REGISTERED PROFESSIONAL ENGINEER
EXPIRES: 05/04/2007

JACOBS
JACOBS CIVIL INC.
600 108th Avenue NE,
Suite 700
Bellevue, WA 98004
Phone: (425)452-8000
Fax: (425)452-1212

CLARK COUNTY WASHINGTON

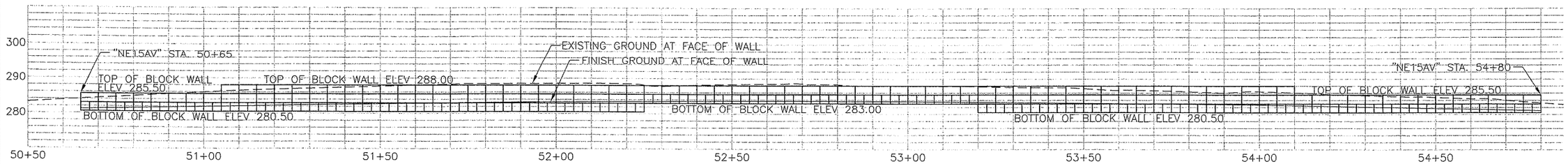

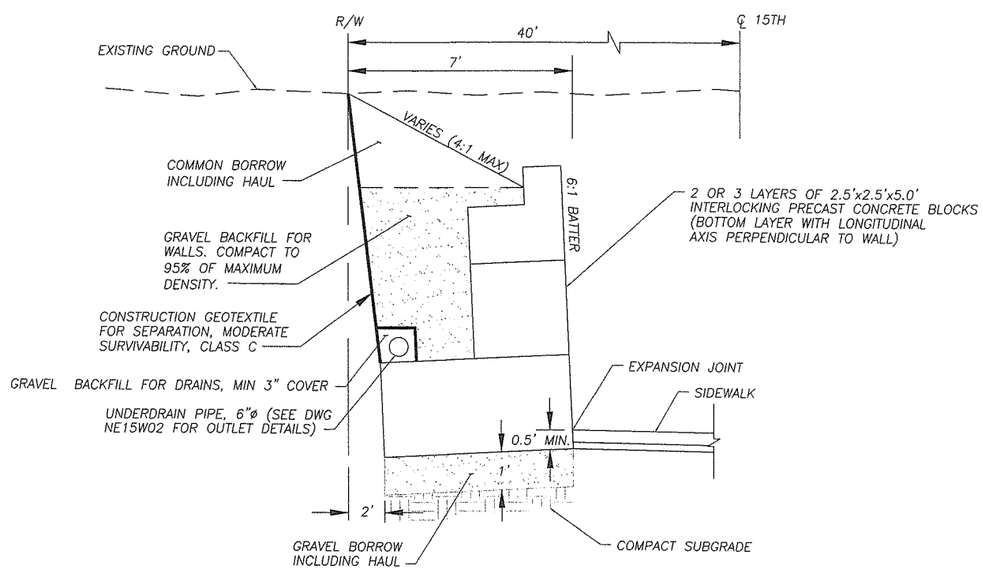

TYPICAL WALL SECTION

NTS

DESIGNED HAW
DRAWN HAW
CRP 382822
HOR. NONE
VERT. NONE
DATE 10/31/2005
DWG: NE15W03
SHEET 17 OF 73

CALL 48 HOURS BEFORE YOU DIG
1-800-553-4344
"It's the Law"
NORTHWEST UTILITIES NOTIFICATION CENTER

DESIGN & ENGINEERING DIVISION

NE 15TH AVENUE
BLOCK WALL DETAILS

STATE OF WASHINGTON
JEFFREY A. REEKS
REGISTERED PROFESSIONAL ENGINEER
12/21/05
EXPIRES: 11/08/06

JACOBS
JACOBS CIVIL INC.
600 108th Avenue NE,
Suite 700
Bellevue, WA 98004
Phone: (425)452-8000
Fax: (425)452-1212

CLARK COUNTY WASHINGTON

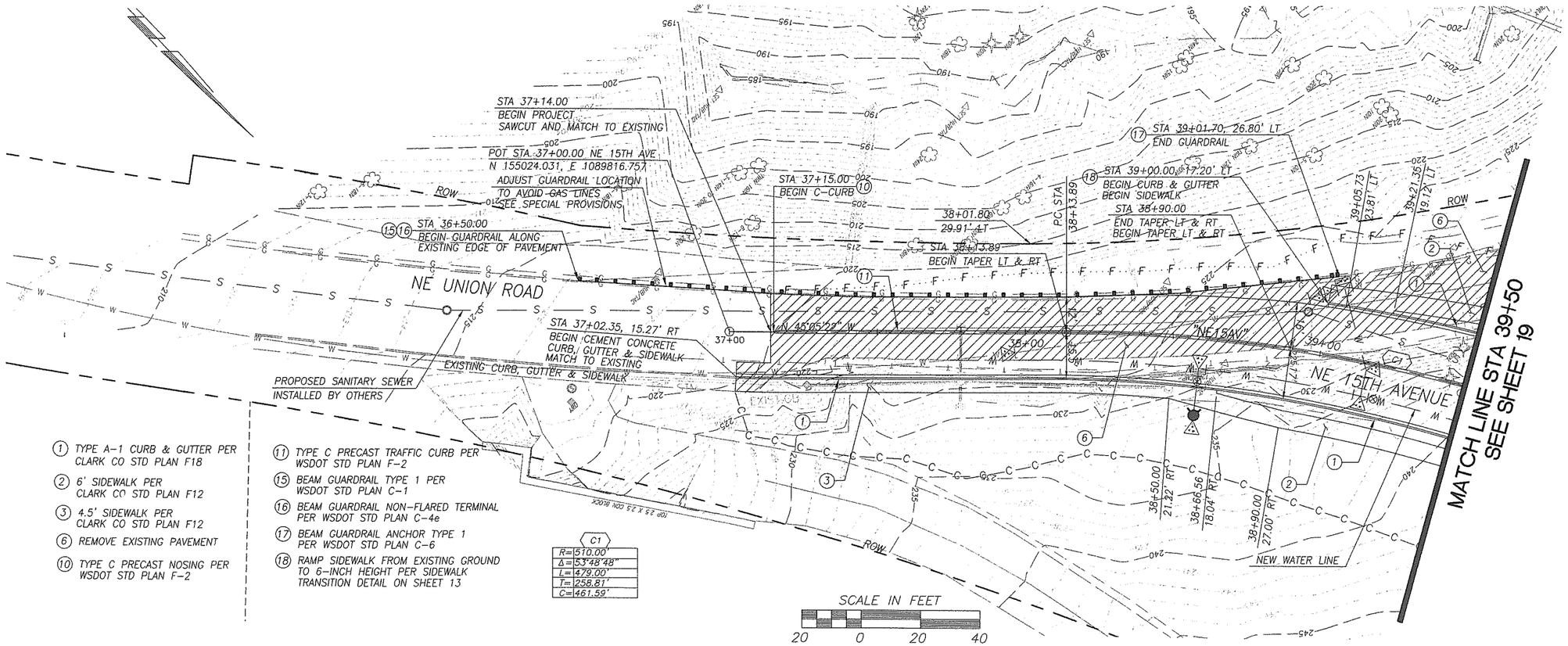

1. TYPE A-1 CURB & GUTTER PER CLARK CO STD PLAN F18
2. 6' SIDEWALK PER CLARK CO STD PLAN F12
3. 4.5' SIDEWALK PER CLARK CO STD PLAN F12
6. REMOVE EXISTING PAVEMENT
10. TYPE C PRECAST NOSING PER WSDOT STD PLAN F-2
11. TYPE C PRECAST TRAFFIC CURB PER WSDOT STD PLAN F-2
15. BEAM GUARDRAIL TYPE 1 PER WSDOT STD PLAN C-1
16. BEAM GUARDRAIL NON-FLARED TERMINAL PER WSDOT STD PLAN C-4e
17. BEAM GUARDRAIL ANCHOR TYPE 1 PER WSDOT STD PLAN C-6
18. RAMP SIDEWALK FROM EXISTING GROUND TO 6-INCH HEIGHT PER SIDEWALK TRANSITION DETAIL ON SHEET 13

C1
R=510.00'
Δ=53°48'48"
L=479.00'
T=258.81'
C=461.59'

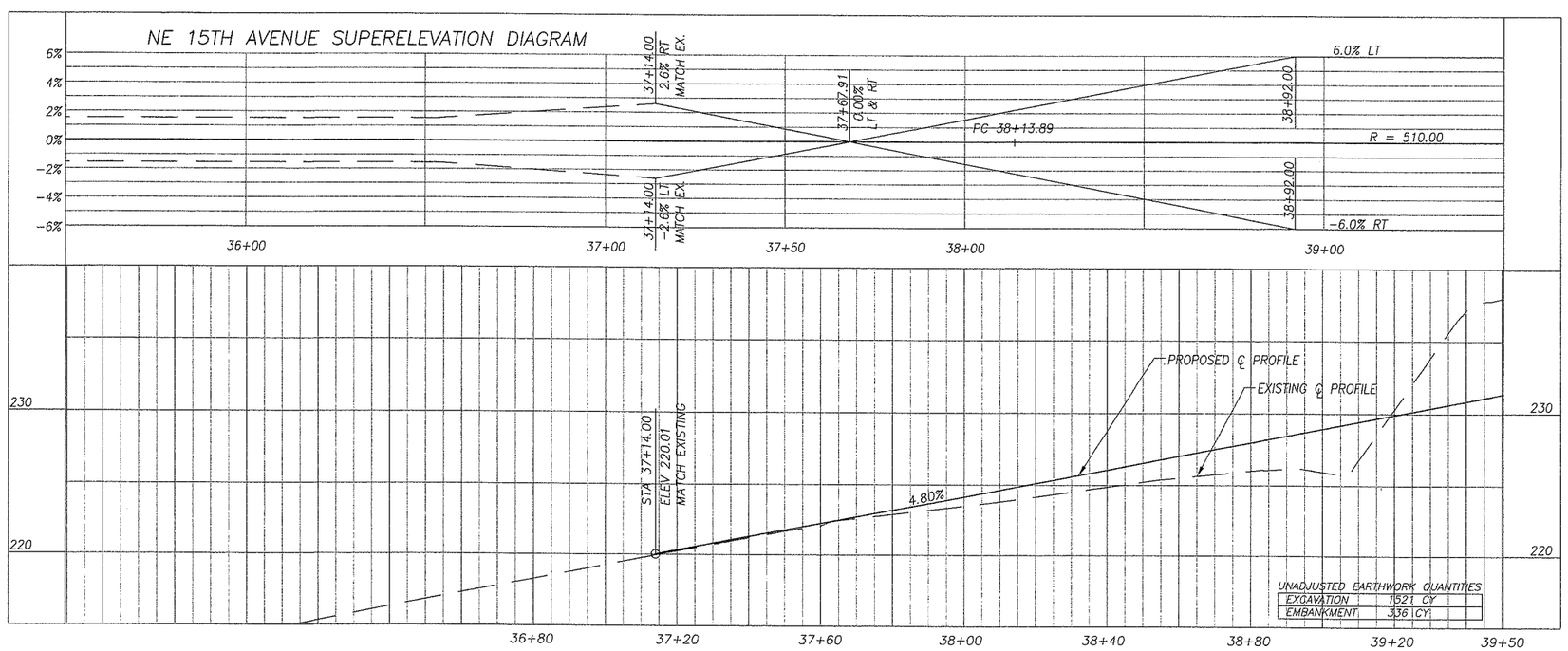

UNADJUSTED EARTHWORK QUANTITIES	
EXCAVATION	1521 CY
EMBANKMENT	336 CY

DESIGNED HAW
DRAWN HAW
CRP 382822
HOR. 1" = 20'
VERT. 1" = 5'
DATE 10/31/2005
DWG: NE15PP01
SHEET 18 OF 73

CALL 48 HOURS BEFORE YOU DIG 1-800-553-4344 "It's the Law"
NORTHWEST UTILITIES NOTIFICATION CENTER

DESIGN & ENGINEERING DIVISION

NE 15TH AVENUE
B.O.P. TO STA 39+50

HILLARY A. REEKS STATE OF WASHINGTON REGISTERED PROFESSIONAL ENGINEER 12/21/05
EXPIRES: 11/08/06

JACOBS
JACOBS CIVIL INC.
600 108th Avenue NE,
Suite 700
Bellevue, WA 98004
Phone: (425)452-8000
Fax: (425)452-1212

CLARK COUNTY WASHINGTON

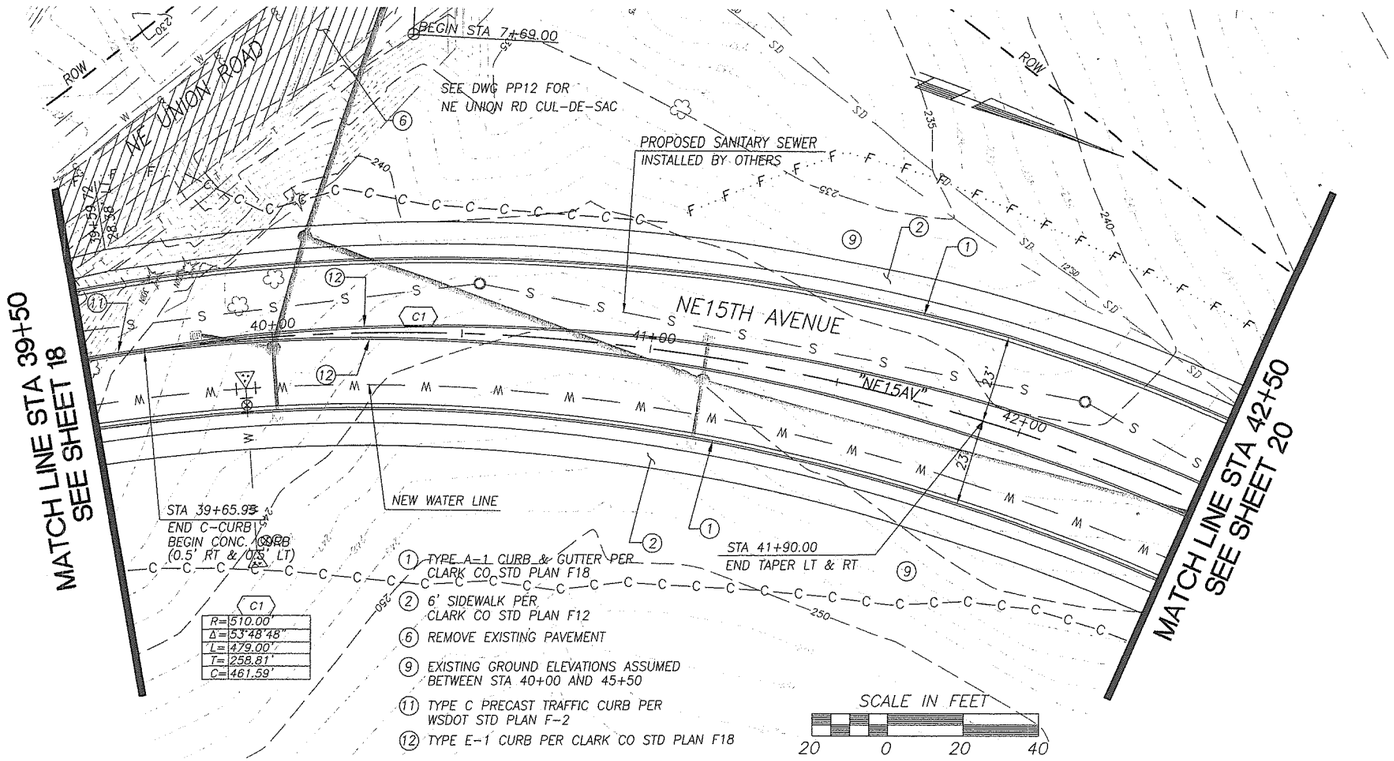

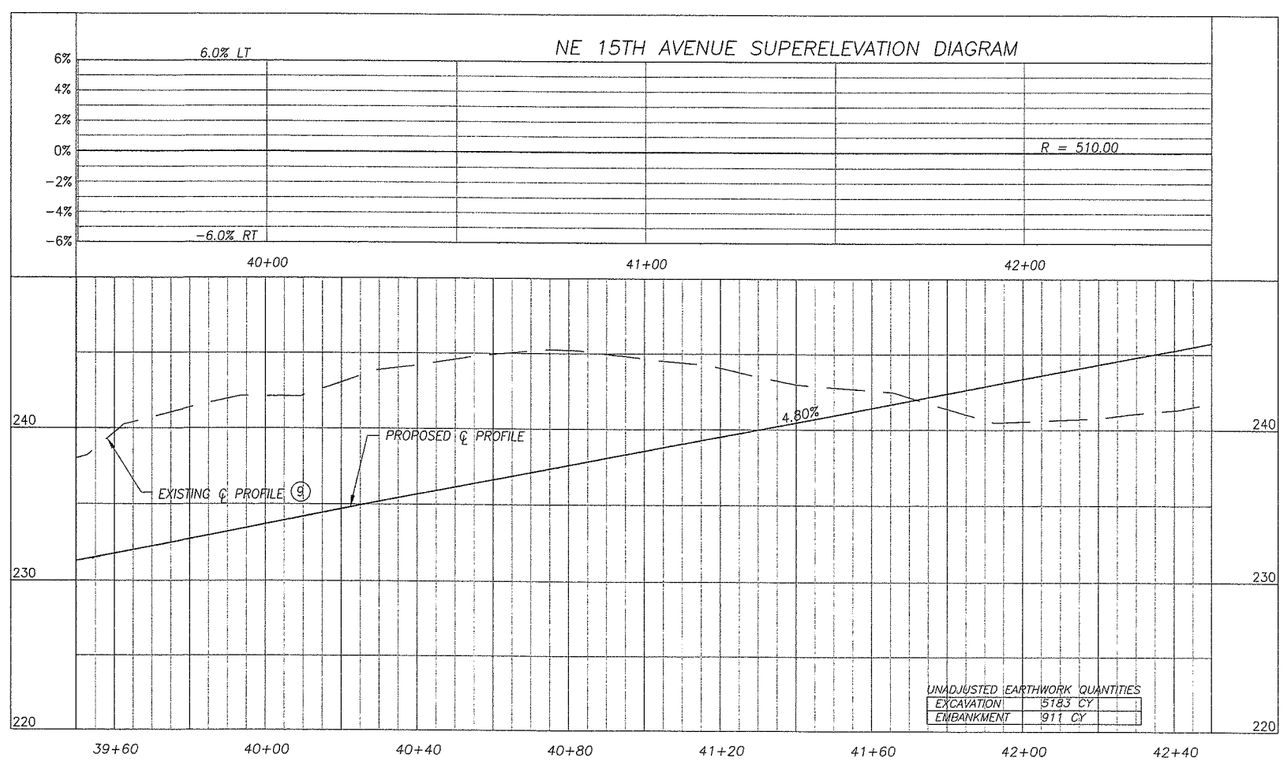

UNADJUSTED EARTHWORK QUANTITIES

EXCAVATION	5183 CY
EMBANKMENT	911 CY

DESIGNED HAW
DRAWN HAW
CRP 382822
HOR. 1" = 20'
VERT. 1" = 5'
DATE 10/31/2005
DWG: NE15PP02
SHEET 19 OF 73

CALL 48 HOURS BEFORE YOU DIG
1-800-553-4344
"It's the Law"
NORTHWEST UTILITIES NOTIFICATION CENTER

DESIGN & ENGINEERING DIVISION

NE 15TH AVENUE
STA 39+50 TO STA 42+50

HEATHER A. NEEKAS
STATE OF WASHINGTON
REGISTERED PROFESSIONAL ENGINEER
EXPIRES: 11/08/06

JACOBS

JACOBS CIVIL INC.
600 108th Avenue NE,
Suite 700
Bellevue, WA 98004
Phone: (425)452-8000
Fax: (425)452-1212

CLARK COUNTY WASHINGTON

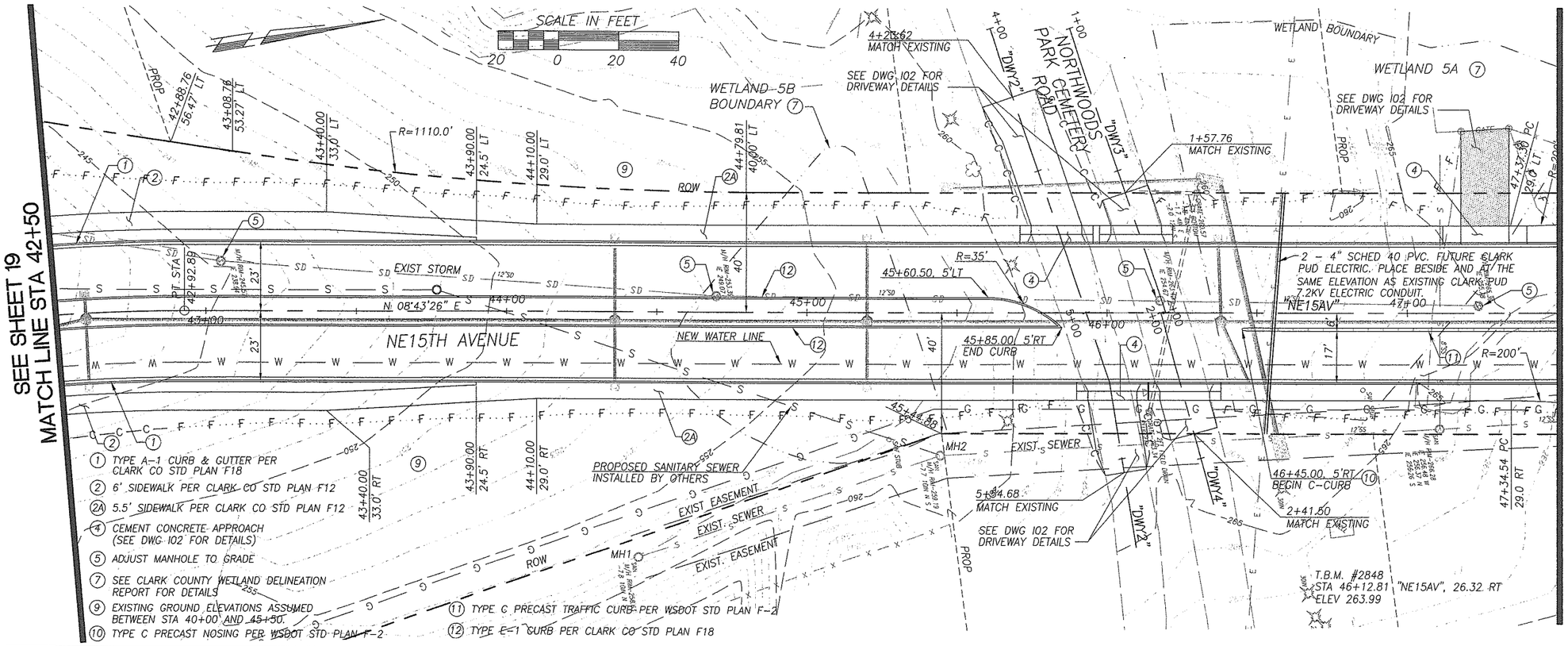

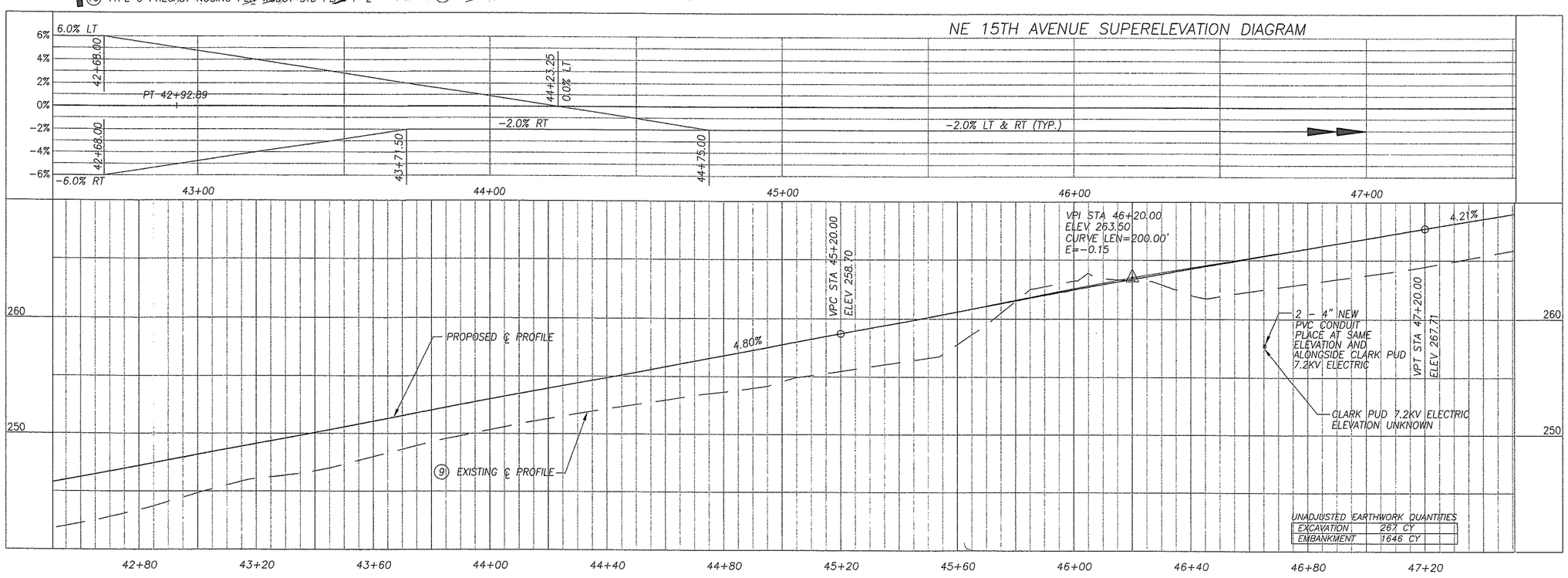

DESIGNED HAW
DRAWN HAW
CRP 382822
HOR. 1" = 20'
VERT. 1" = 5'
DATE 10/31/2005
DWG: NE15PP03
SHEET 20 OF 73

CALL 48 HOURS BEFORE YOU DIG 1-800-553-4344 "It's the Law" NORTHWEST UTILITIES NOTIFICATION CENTER

DESIGN & ENGINEERING DIVISION

NE 15TH AVENUE
STA42+50 TO STA 47+50

STATE OF WASHINGTON PROFESSIONAL ENGINEER REGISTERED WALTER A. HENKS
EXPIRES: 11/08/06

JACOBS
JACOBS CIVIL INC.
600 108th Avenue NE, Suite 700
Bellevue, WA 98004
Phone: (425)452-8000
Fax: (425)452-1212

CLARK COUNTY WASHINGTON

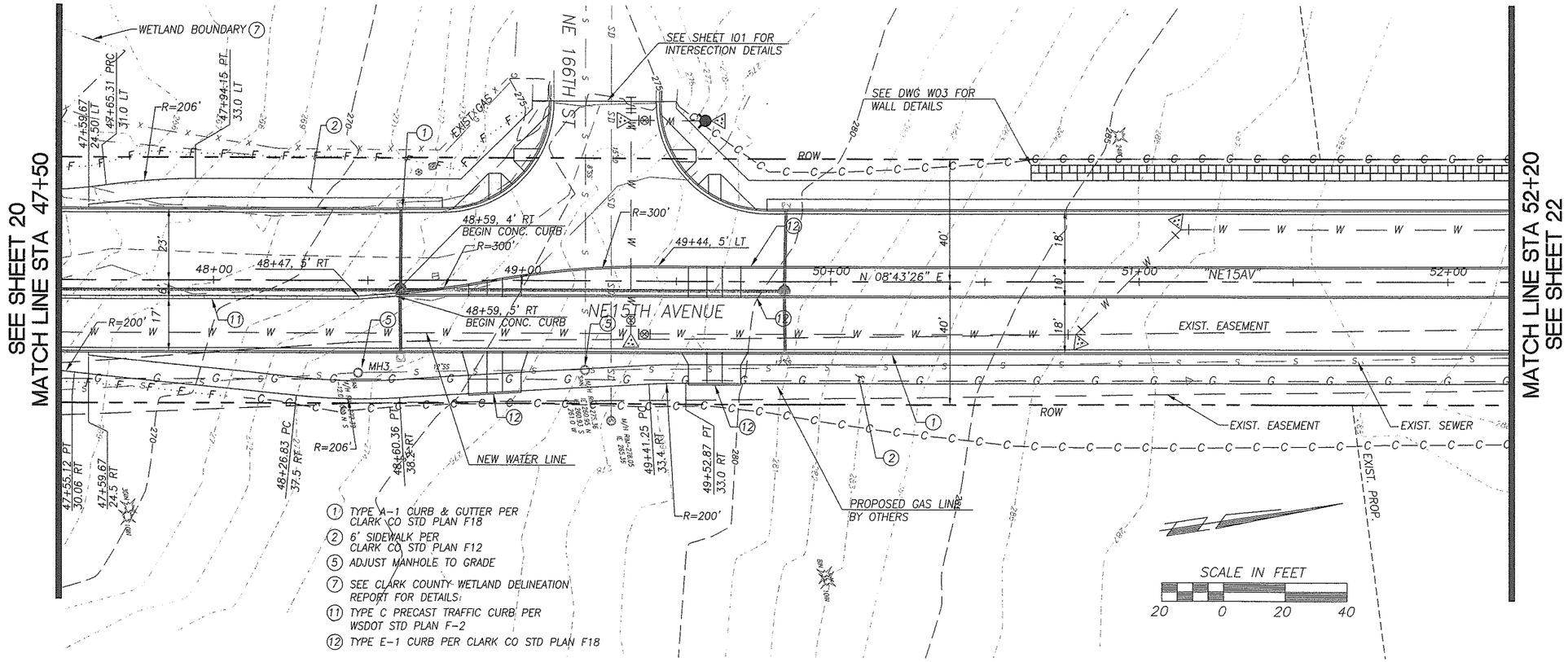

(1) TYPE A-1 CURB & GUTTER PER CLARK CO STD PLAN F18
(2) 6' SIDEWALK PER CLARK CO STD PLAN F12
(5) ADJUST MANHOLE TO GRADE
(7) SEE CLARK COUNTY WETLAND DELINEATION REPORT FOR DETAILS.
(11) TYPE C PRECAST TRAFFIC CURB PER WSDOT STD PLAN F-2
(12) TYPE E-1 CURB PER CLARK CO STD PLAN F18

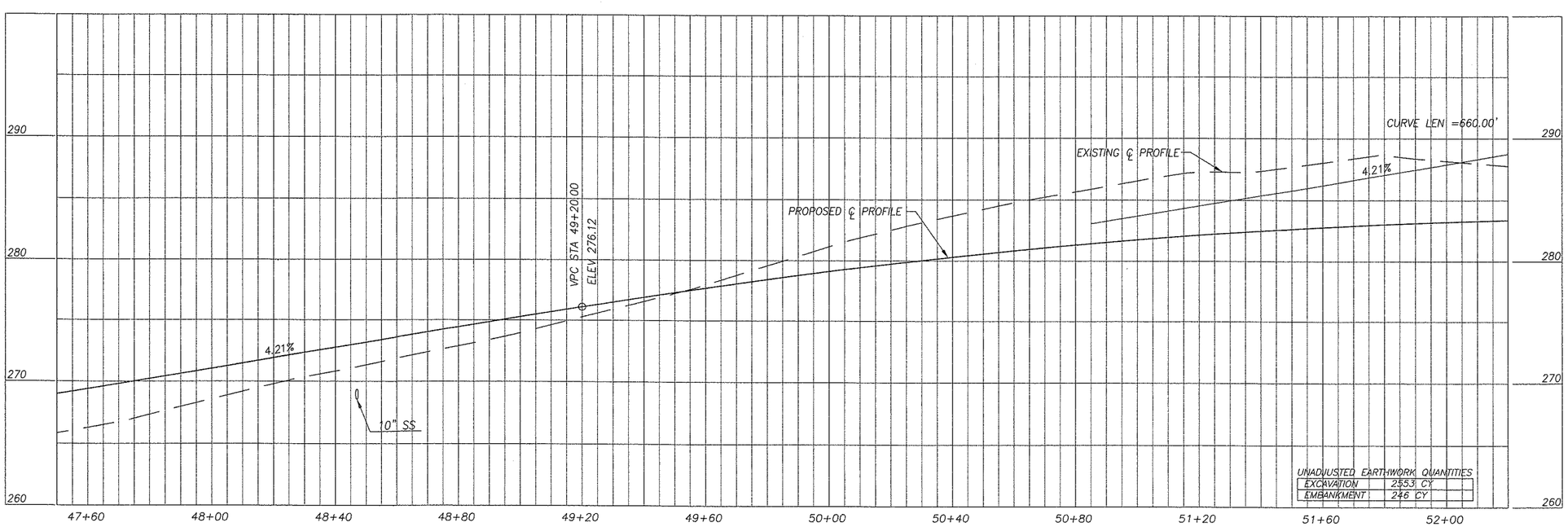

UNADJUSTED EARTHWORK QUANTITIES

EXCAVATION	2553 CY
EMBANKMENT	246 CY

DESIGNED HAW
DRAWN HAW
CRP 382622
HOR. 1" = 20'
VERT. 1" = 5'
DATE 01/03/2006
DWG. NE15PP04
SHEET 21 OF 73

CALL 48 HOURS BEFORE YOU DIG 1-800-553-4344 "It's the Law" NORTHWEST UTILITIES NOTIFICATION CENTER

DESIGN & ENGINEERING DIVISION

NE 15TH AVENUE
STA 47+50 TO STA 52+20

HEATHER A. MERKES STATE OF WASHINGTON REGISTERED PROFESSIONAL ENGINEER
EXPIRES: 11/08/06

JACOBS
JACOBS CIVIL INC.
600 108th Avenue NE,
Suite 700
Bellevue, WA 98004
Phone: (425)452-6000
Fax: (425)452-1212

CLARK COUNTY WASHINGTON

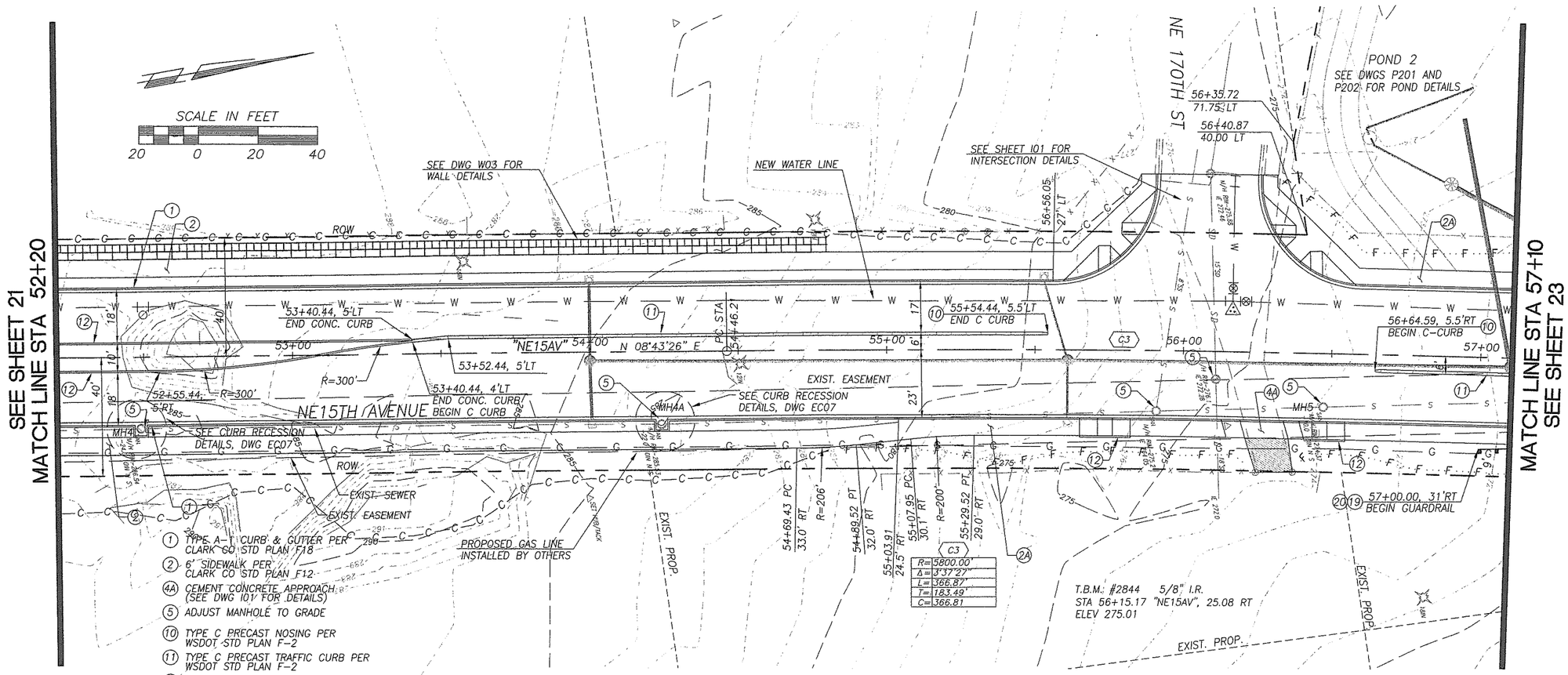

1. TYPE A-1 CURB & GUTTER PER CLARK CO STD PLAN F18
2. 6' SIDEWALK PER CLARK CO STD PLAN F12
4A. CEMENT CONCRETE APPROACH (SEE DWG 101 FOR DETAILS)
5. ADJUST MANHOLE TO GRADE
10. TYPE C PRECAST NOSING PER WSDOT STD PLAN F-2
11. TYPE C PRECAST TRAFFIC CURB PER WSDOT STD PLAN F-2
12. TYPE E-1 CURB PER CLARK CO STD PLAN F18
19. BEAM GUARDRAIL FLARED TERMINAL PER WSDOT STD PLAN C-4b
20. BEAM GUARDRAIL TYPE 1 - 8 FOOT LONG POST PER WSDOT STD PLAN C-1

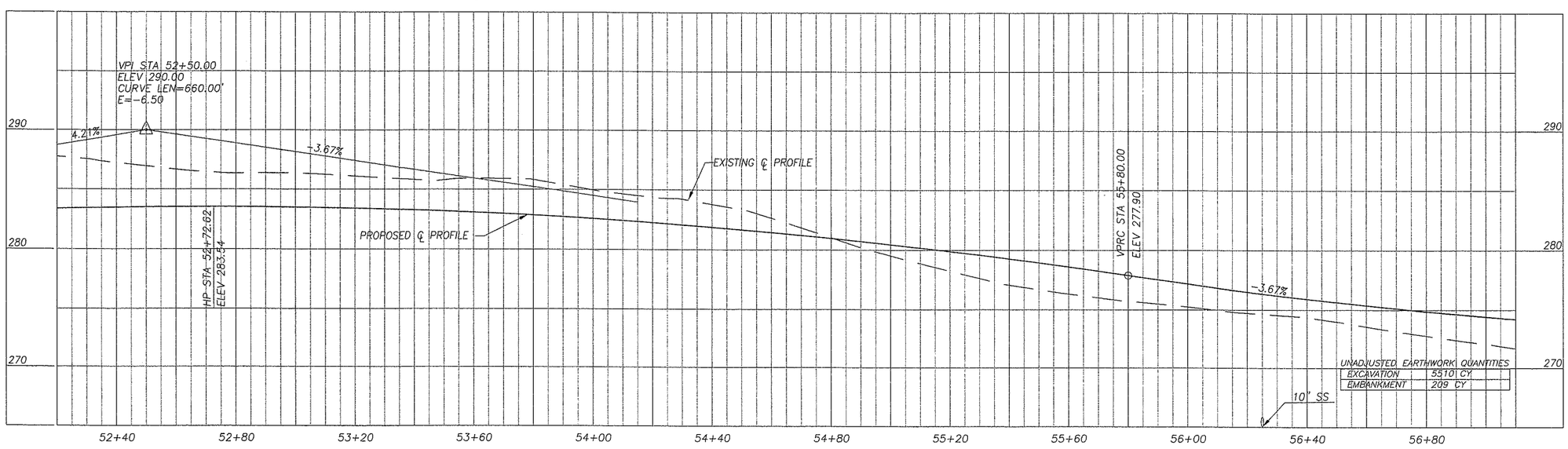

UNADJUSTED EARTHWORK QUANTITIES

EXCAVATION	5510 CY
EMBANKMENT	209 CY

DESIGNED HAW
DRAWN HAW
CRP 382822
HOR. 1" = 20'
VERT. 1" = 5'
DATE 01/03/2006
DWG: NE15PP05
SHEET 22 OF 73

CALL 48 HOURS BEFORE YOU DIG 1-800-553-4344 "It's the Law" NORTHWEST UTILITY NOTIFICATION CENTER

DESIGN & ENGINEERING DIVISION

NE 15TH AVENUE
STA 52+20 TO STA 57+10

EDWARD T. BLODGETT STATE OF WASHINGTON 18484 REGISTERED PROFESSIONAL ENGINEER
EXPIRES: 05/04/2007

JACOBS
JACOBS CIVIL INC.
600 108th Avenue NE,
Suite 1700
Bellevue, WA 98004
Phone: (425)452-8000
Fax: (425)452-1212

CLARK COUNTY WASHINGTON

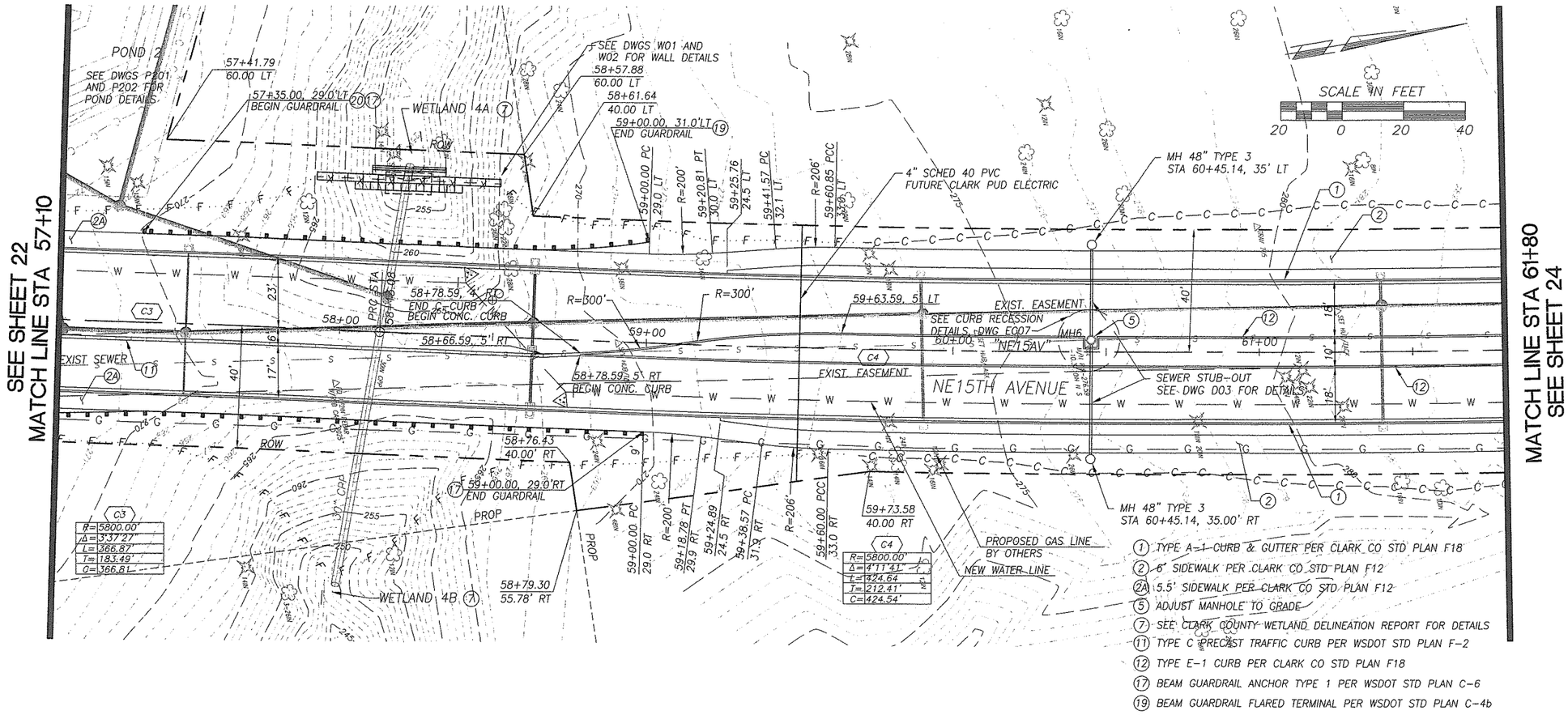

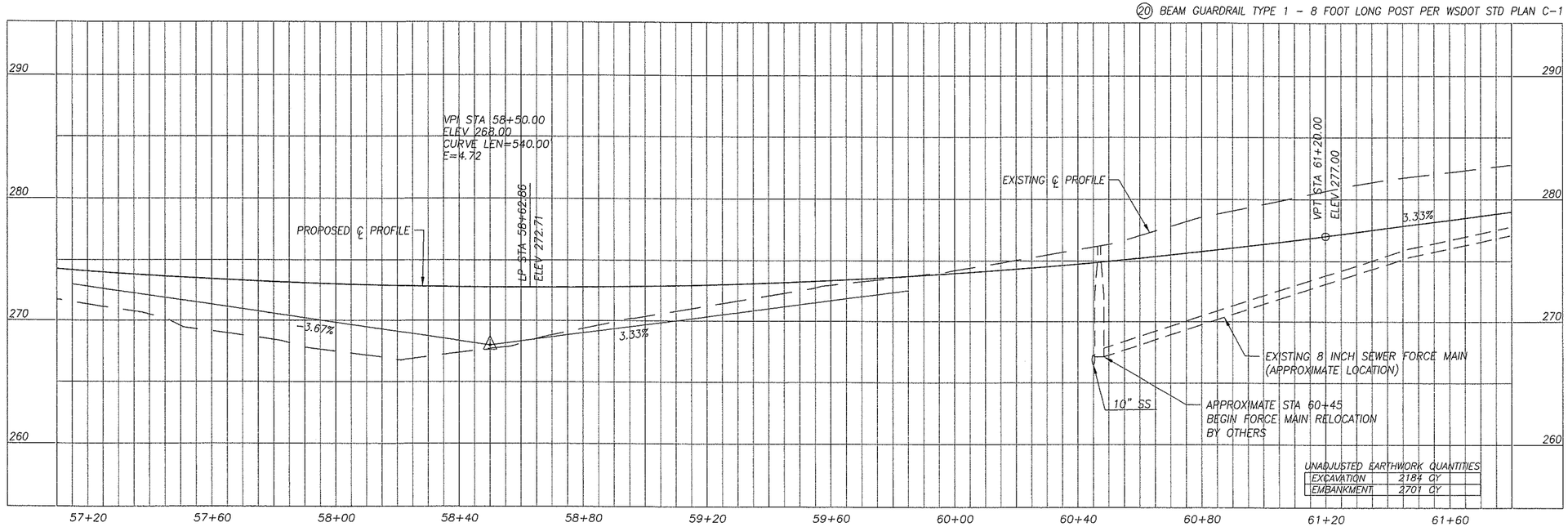

UNADJUSTED EARTHWORK QUANTITIES

EXCAVATION	2184 CY
EMBANKMENT	2701 CY

DESIGNED PR
DRAWN WJE
CRP 382822
HOR. 1" = 20'
VERT. 1' = 5'
DATE 01/03/2006
DWG: NE15PP06
SHEET 23 OF 73

CALL 48 HOURS BEFORE YOU DIG
1-800-553-4344
"It's the Law"
NORTHWEST UTILITIES NOTIFICATION CENTER

DESIGN & ENGINEERING DIVISION

NE 15TH AVENUE
STA 57+10 TO STA 61+80

EXPIRES: 05/04/2007

JACOBS

JACOBS CIVIL INC.
600 108th Avenue NE,
Suite 700
Bellevue, WA 98004
Phone: (425)452-8000
Fax: (425)452-1212

CLARK COUNTY WASHINGTON

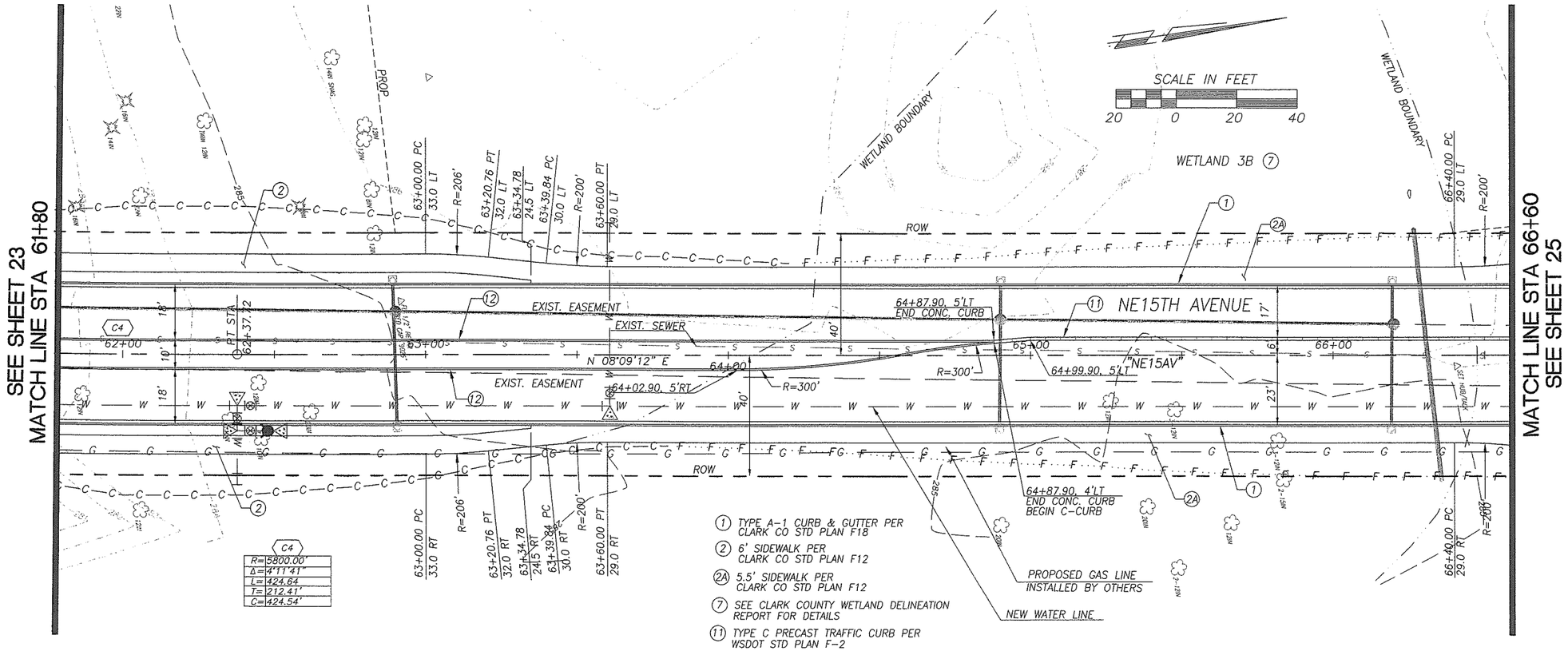

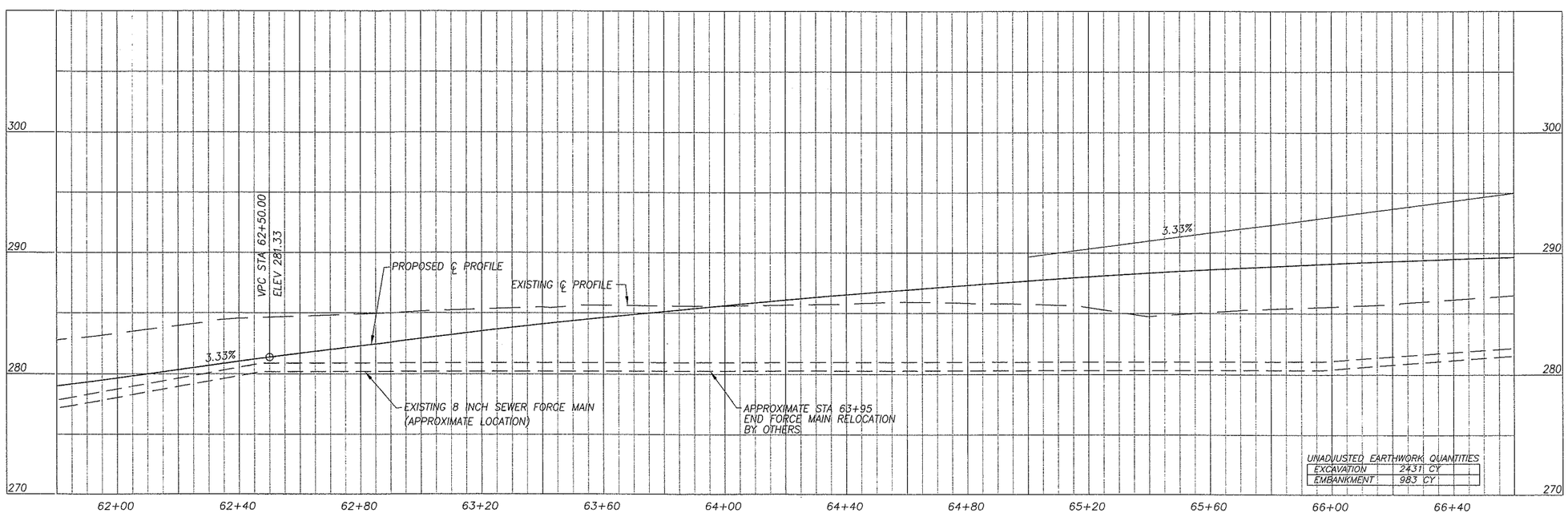

UNADJUSTED EARTHWORK QUANTITIES

EXCAVATION	2431 CY
EMBANKMENT	983 CY

DESIGNED PR
DRAWN WJE
CRP 382822
HOR. 1" = 20'
VERT. 1" = 5'
DATE 01/03/2006
DWG: NE15PP07
SHEET 24 OF 73

CALL 48 HOURS BEFORE YOU DIG
1-800-553-4344
"It's the Law"
NORTHWEST UTILITIES NOTIFICATION CENTER

DESIGN & ENGINEERING DIVISION

NE 15TH AVENUE
STA 61+80 TO STA 66+60

STATE OF WASHINGTON
EDWARD J. BLODGETT
REGISTERED PROFESSIONAL ENGINEER
EXPIRES: 05/04/2007

JACOBS
JACOBS CIVIL INC.
600 108th Avenue NE,
Suite 700
Bellevue, WA 98004
Phone: (425)452-8000
Fax: (425)452-1212

CLARK COUNTY WASHINGTON

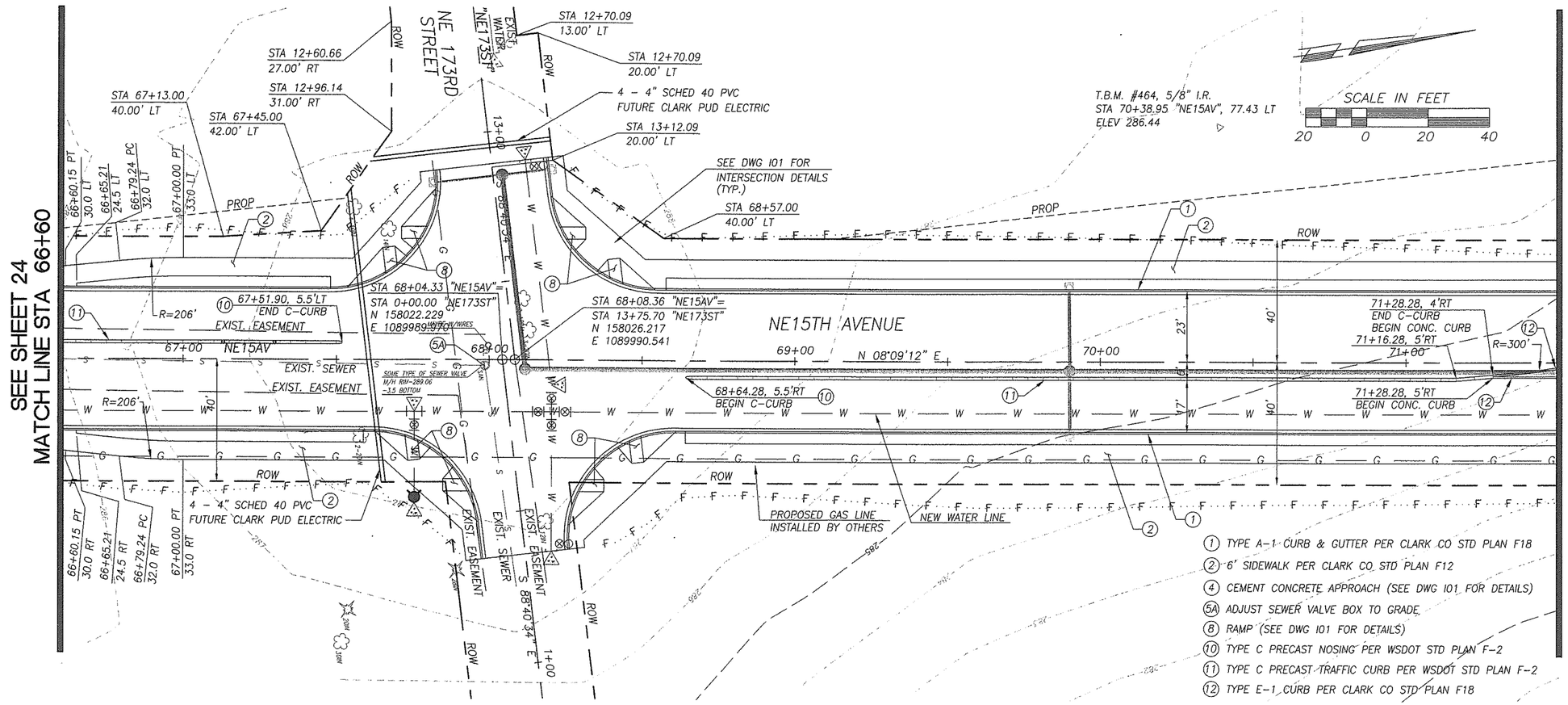

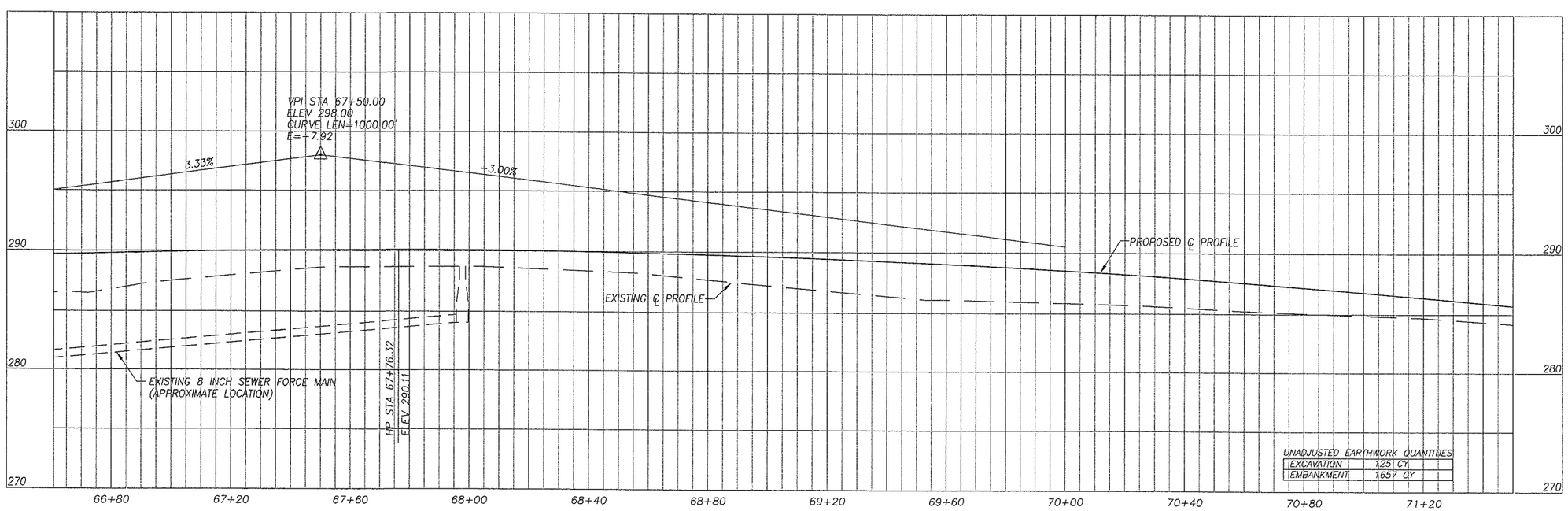

UNADJUSTED EARTHWORK QUANTITIES

EXCAVATION	1,251 CY
EMBANKMENT	1,657 CY

DESIGNED PR
DRAWN WJE
CRP 382822
HOR. 1" = 20'
VERT. 1" = 5'
DATE 01/03/2006
DWG. NE15PP08
SHEET 25 OF 73

CALL 48 HOURS BEFORE YOU DIG
1-800-553-4344
It's the Law
NORTHWEST UTILITIES NOTIFICATION CENTER

DESIGN & ENGINEERING DIVISION

NE 15TH AVENUE
STA 66+60 TO STA 71+50

EDWARD J. BLODGETT
STATE OF WASHINGTON
REGISTERED PROFESSIONAL ENGINEER
EXPIRES: 05/04/2007

JACOBS
JACOBS CIVIL INC.
600 108th Avenue NE,
Suite 700
Bellevue, WA 98004
Phone: (425)452-8000
Fax: (425)452-1212

CLARK COUNTY WASHINGTON

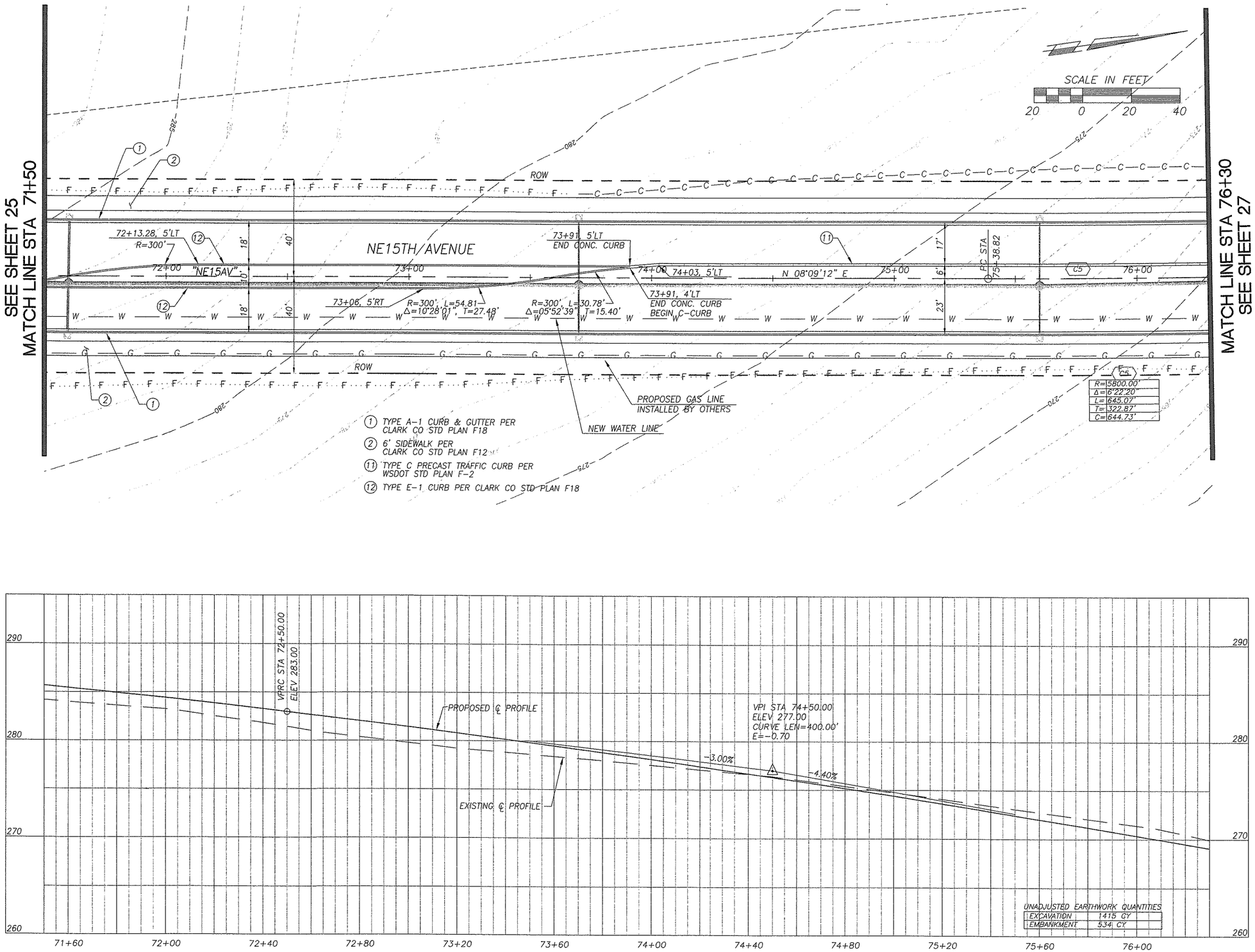

DESIGNED PR
DRAWN WJE
CRP 382822
HOR. 1" = 20'
VERT. 1" = 5'
DATE 10/31/2005
DWG: NE15PP09
SHEET 26 OF 73

CALL 48 HOURS BEFORE YOU DIG
1-800-553-4344
"It's the Law"
NORTHWEST UTILITIES NOTIFICATION CENTER

DESIGN & ENGINEERING DIVISION

NE 15TH AVENUE
STA 71+50 TO STA 76+30

EDWARD J. BLODGETT
STATE OF WASHINGTON
PROFESSIONAL ENGINEER
EXPIRES: 05/04/2007

JACOBS
JACOBS CIVIL INC.
600 108th Avenue NE,
Suite 700
Bellevue, WA 98004
Phone: (425)452-8000
Fax: (425)452-1212

CLARK COUNTY WASHINGTON

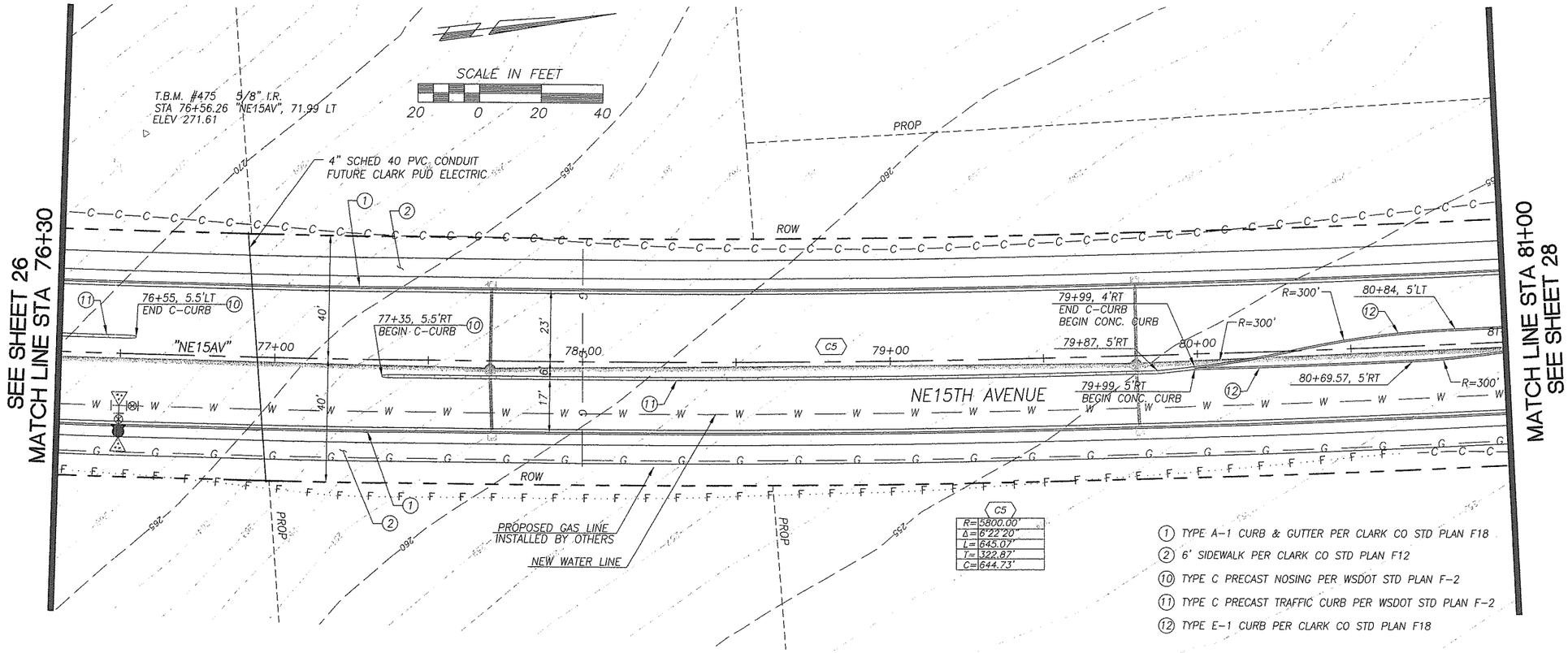

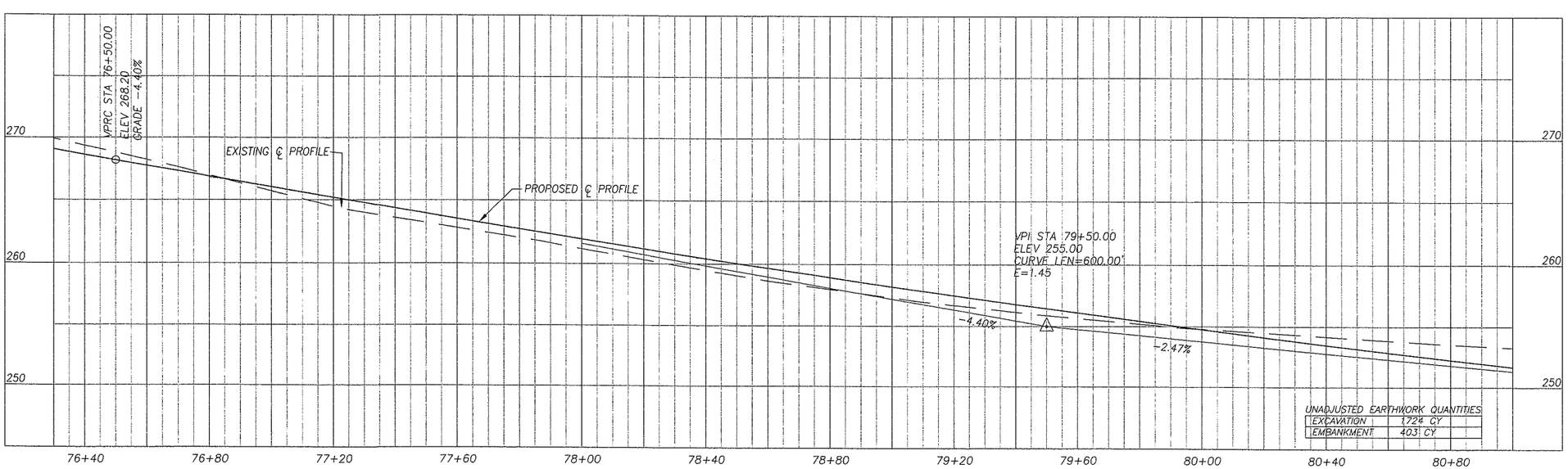

UNADJUSTED EARTHWORK QUANTITIES	
EXCAVATION	1724 CY
EMBANKMENT	403 CY

DESIGNED PR
DRAWN WJE
CRP 382822
HOR. 1" = 20'
VERT. 1" = 5'
DATE 10/31/2005
DWG: NE15PP10
SHEET 27 OF 73

CALL 48 HOURS BEFORE YOU DIG
1-800-553-4344
"It's the Law"
NORTHWEST UTILITIES NOTIFICATION CENTER

DESIGN & ENGINEERING DIVISION

NE 15TH AVENUE
STA 76+30 TO STA 81+00

EDWARD J. BLODGETT
STATE OF WASHINGTON
REGISTERED PROFESSIONAL ENGINEER
EXPIRES: 05/04/2007

JACOBS
JACOBS CIVIL INC.
600 108th Avenue NE,
Suite 700
Bellevue, WA 98004
Phone: (425)452-8000
Fax: (425)452-1212

CLARK COUNTY WASHINGTON

SEE SHEET 27
MATCH LINE STA 81+00

SCALE IN FEET
20 0 20 40

C5
R=5800.00'
Δ=6°22'20"
L=645.07'
T=322.87'
C=644.73'

PROP

ROW

81+54.57, 5'LT
END CONC. CURB

81+54.57, 4'LT
END CONC. CURB
BEGIN C-CURB

R=300'

PT STA
81+83.89

81+66.57, 5'LT

82+00

N 01°46'51" E

83+00

NE15TH AVENUE

83+80.00
40.00 LT

83+84.58, 23'LT
BEGIN TAPER

84+32.00
49.00 LT

84+79.24, 38.78'LT
END TAPER

84+50.00, 44.55'LT

6:1 TAPER

84+68.57, 5.5'LT
END C-CURB

84+00

"NE15AV"

85+00

84+50.00, 33'RT

NEW WATER LINE

83+28.00
40.00 RT

PROPOSED GAS LINE
INSTALLED BY OTHERS

NEW TRAFFIC SIGNAL

POND 3
SEE DWGS P301 AND
P302 FOR POND DETAILS

END CURB & GUTTER AND SIDEWALK
NE179ST STA 40+53.68, 12.01' RT

40+57.00
67.00 RT

40+57.00
30.00 RT

SEE DWG 102 FOR
INTERSECTION DETAILS (TYP.)

END CURB & GUTTER AND SIDEWALK
NE179ST STA 41+96.92, 11.96' RT

NE 179TH STREET
"NE179ST"

42+00

T.3N., R.1E., SECTION 14
S 88°38'27" E

T.3N., R.1E., SECTION 11

30'

±2'

12" WTR

40+50, 21'LT
BEGIN GUARDRAIL
NE179ST STA 40+53.68, 9.01' RT
BEGIN SAWCUT EXISTING PAVEMENT

T.B.M. #313 5/8" I.R. W/YPC
STA 38+66.07 "NE179ST", 12.74 LT
ELEV 248.92

NEW TRAFFIC SIGNAL

STA 85+21.03 "NE15AV" E.O.P.=
STA 41+33.35 "NE179ST"
N 159728.592
E 1090160.437

NEW TRAFFIC SIGNAL

41+91, 21'LT
END GUARDRAIL

NE179ST STA 41+96.92, 8.96' RT
END SAWCUT EXISTING PAVEMENT

T.B.M. #478 5/8" I.R. W/YPC
STA 43+59.33 "NE179ST", 20.84 RT
ELEV 238.69

(1) TYPE A-1 CURB & GUTTER PER CLARK CO STD PLAN F18
(2) 6' SIDEWALK PER CLARK CO STD PLAN F12
(2A) 5.5' SIDEWALK PER CLARK CO STD PLAN F12
(6) REMOVE EXISTING PAVEMENT
(10) TYPE C PRECAST NOSING PER WSDOT STD PLAN F-2
(11) TYPE C PRECAST TRAFFIC CURB PER WSDOT STD PLAN F-2
(12) TYPE E-1 CURB PER CLARK CO STD PLAN F18
(15) BEAM GUARDRAIL TYPE 1 PER WSDOT STD PLAN C-1
(18) RAMP SIDEWALK FROM EXISTING GROUND TO 6-INCH HEIGHT PER SIDEWALK TRANSITION DETAIL ON SHEET 13
(19) BEAM GUARDRAIL FLARED TERMINAL PER WSDOT STD PLAN C-4b

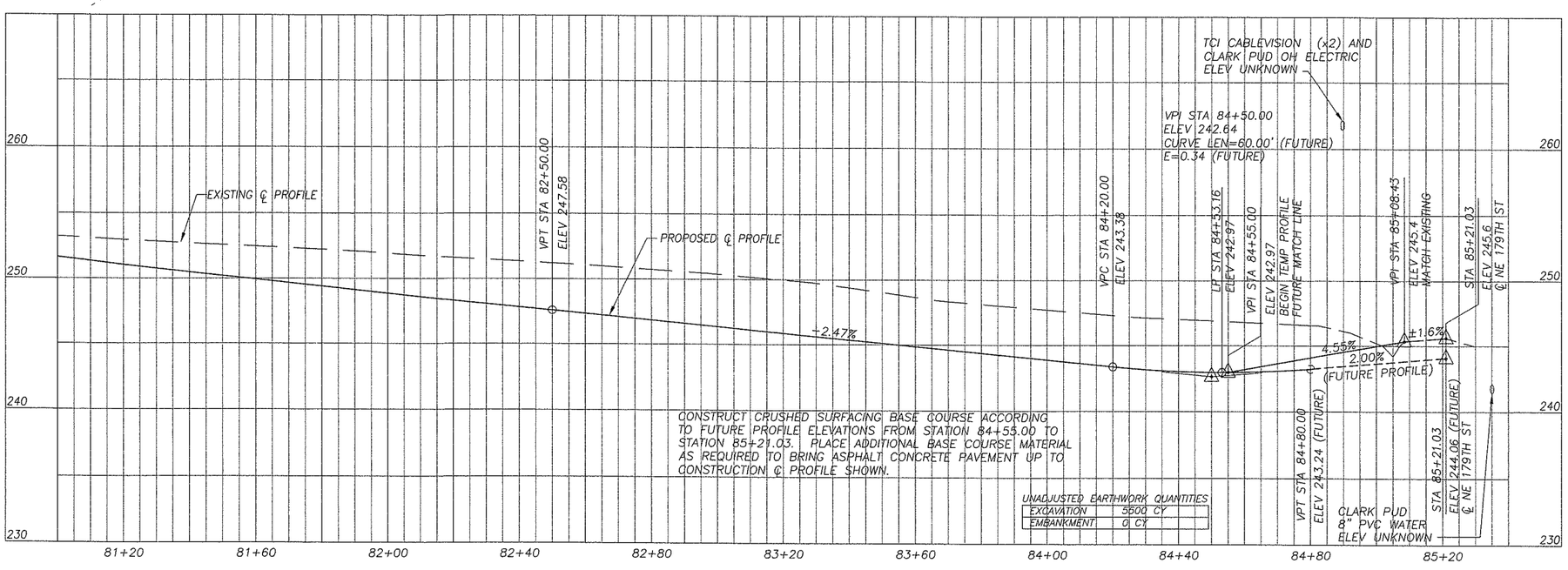

CONSTRUCT CRUSHED SURFACING BASE COURSE ACCORDING TO FUTURE PROFILE ELEVATIONS FROM STATION 84+55.00 TO STATION 85+21.03. PLACE ADDITIONAL BASE COURSE MATERIAL AS REQUIRED TO BRING ASPHALT CONCRETE PAVEMENT UP TO CONSTRUCTION ℄ PROFILE SHOWN.

UNADJUSTED EARTHWORK QUANTITIES

EXCAVATION	5500 CY
EMBANKMENT	0 CY

DESIGNED HAW
DRAWN HAW
CRP 382822
HOR. 1" = 20'
VERT. 1" = 5'
DATE 10/31/2005
DWG: NE15PP11
SHEET 28 OF 73

CALL 48 HOURS BEFORE YOU DIG
1-800-553-4344
"It's the Law"
NORTHWEST UTILITIES NOTIFICATION CENTER

DESIGN & ENGINEERING DIVISION

NE 15TH AVENUE
STA 81+00 TO E.O.P.

BLODGETT, EDWARD J. STATE OF WASHINGTON 19900 PROFESSIONAL ENGINEER
EXPIRES: 05/04/2007

JACOBS

JACOBS CIVIL INC.
600 108th Avenue NE,
Suite 700
Bellevue, WA 98004
Phone: (425)452-8000
Fax: (425)452-1212

CLARK COUNTY WASHINGTON

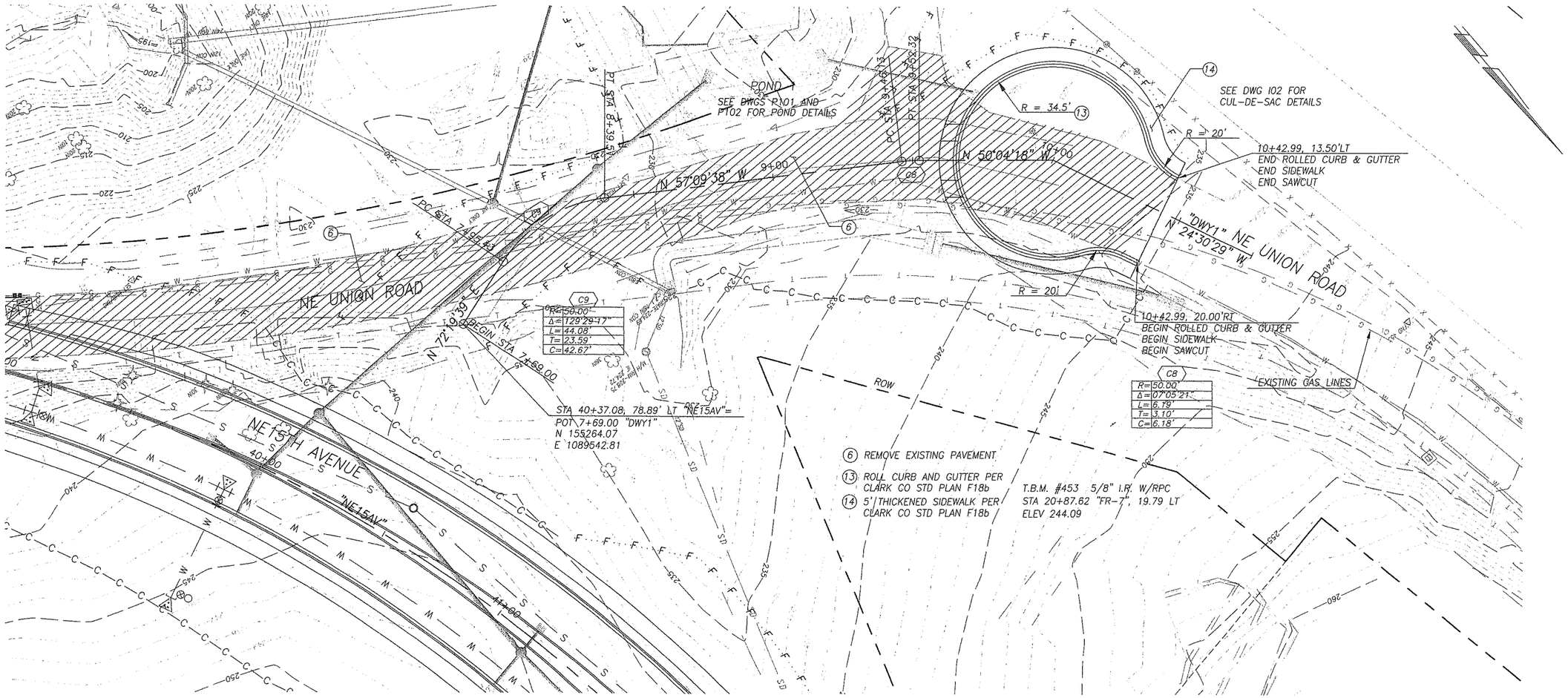

SCALE IN FEET

20 0 20 40

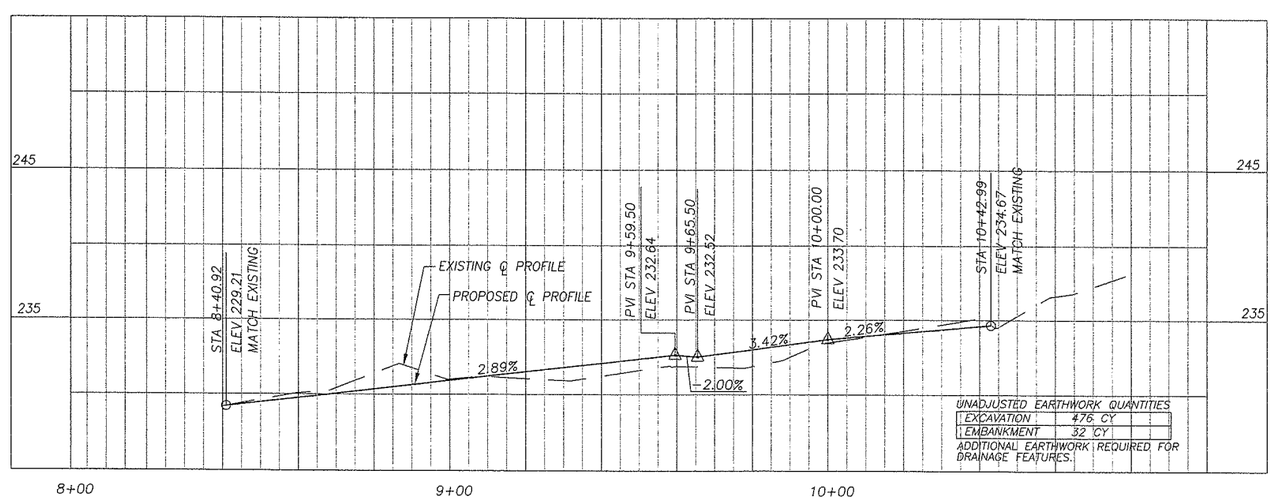

UNADJUSTED EARTHWORK QUANTITIES

EXCAVATION	476 CY
EMBANKMENT	32 CY

ADDITIONAL EARTHWORK REQUIRED FOR DRAINAGE FEATURES.

DESIGNED	HAW
DRAWN	HAW
CRP	382822
HOR.	1" = 20'
VERT.	1" = 5'
DATE	10/31/2005
DWG:	NE15PP12
SHEET	29 OF 73

CALL 48 HOURS BEFORE YOU DIG 1-800-553-4344 "It's the Law" NORTHWEST UTILITIES NOTIFICATION CENTER

DESIGN & ENGINEERING DIVISION

NE UNION ROAD
CUL-DE-SAC

HEATHER A. REEKS STATE OF WASHINGTON REGISTERED PROFESSIONAL ENGINEER

EXPIRES 11/08/06

JACOBS

JACOBS CIVIL INC.
600 108th Avenue NE,
Suite 700
Bellevue, WA 98004
Phone: (425)452-8000
Fax: (425)452-1212

CLARK COUNTY WASHINGTON

MATCH LINE, SEE SHEET 41

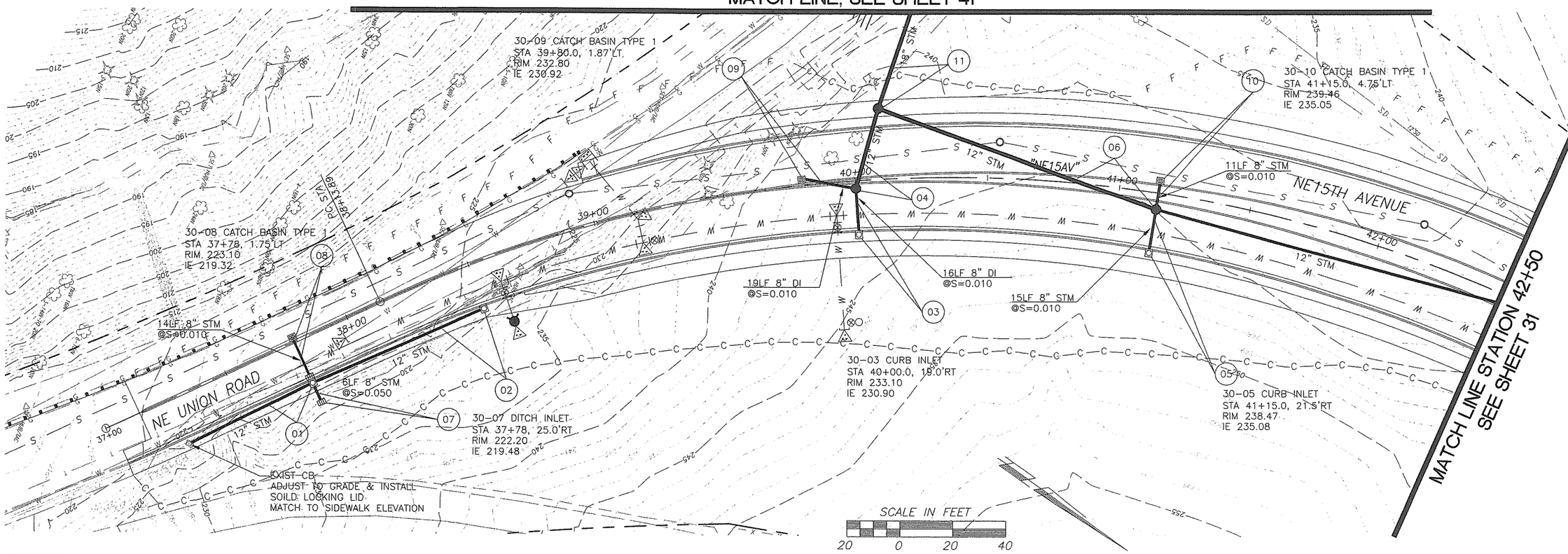

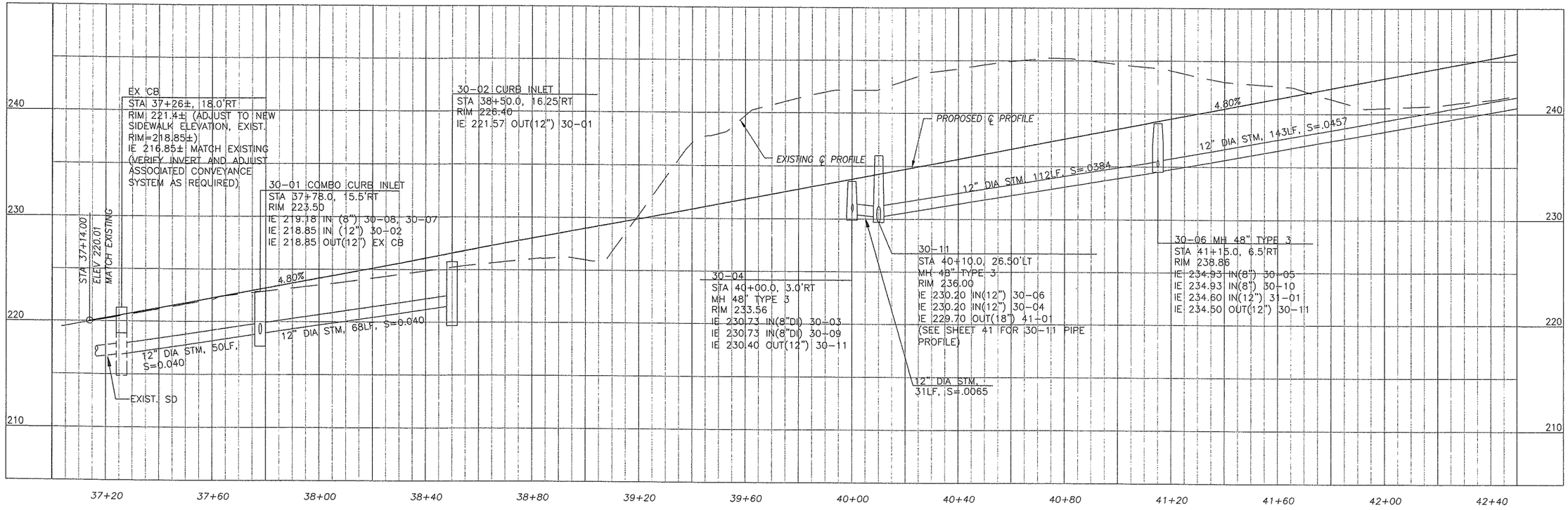

DESIGNED WBH
DRAWN WBH
CRP 382822
HOR. 1" = 20'
VERT. 1" = 5'
DATE 10/31/2005
DWG: NE15DP01
SHEET 30 OF 73

CALL 48 HOURS BEFORE YOU DIG
1-800-553-4344
"It's the Law"
NORTHWEST UTILITIES NOTIFICATION CENTER

DESIGN & ENGINEERING DIVISION

NE 15TH AVENUE
B.O.P. TO STA 42+50

WILLIAM BURKE HICKEY
STATE OF WASHINGTON
REGISTERED PROFESSIONAL ENGINEER
EXPIRES: 04/25/07

JACOBS
JACOBS CIVIL INC.
600 108th Avenue NE,
Suite 700
Bellevue, WA 98004
Phone: (425)452-8000
Fax: (425)452-1212

CLARK COUNTY WASHINGTON

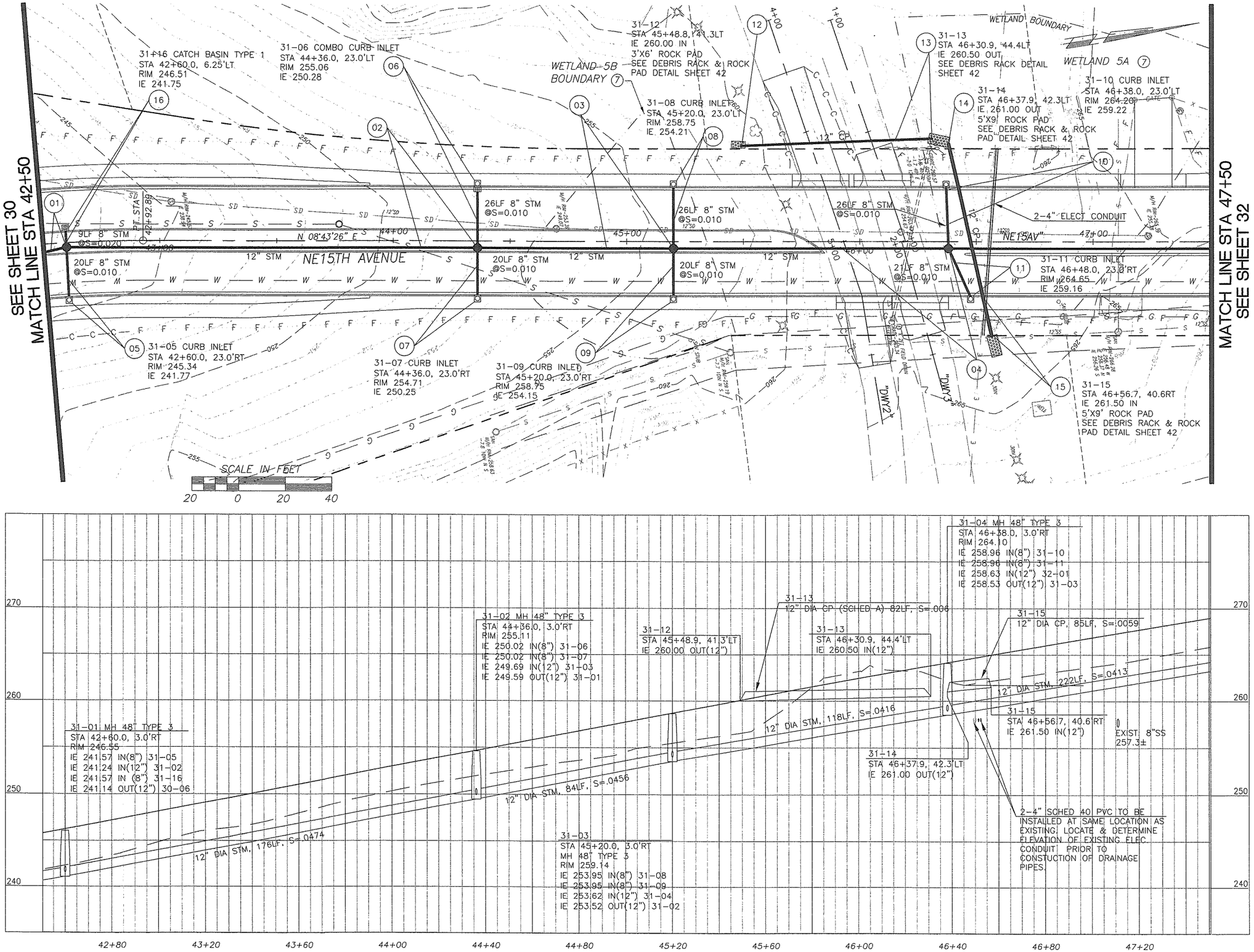

DESIGNED	WBH
DRAWN	WBH
CRP	382822
HOR.	1" = 20'
VERT.	1" = 5'
DATE	10/31/2005
DWG:	NE15DP02
SHEET 31	OF 73

CALL 48 HOURS BEFORE YOU DIG
1-800-553-4344
"It's the Law"
NORTHWEST UTILITIES NOTIFICATION CENTER

DESIGN & ENGINEERING DIVISION

NE 15TH AVENUE
STA42+50 TO STA 47+50

WILLIAM BURKE HICKEY
STATE OF WASHINGTON
REGISTERED PROFESSIONAL ENGINEER
EXPIRES 04/25/07

JACOBS

JACOBS CIVIL INC.
600 108th Avenue NE,
Suite 700
Bellevue, WA 98004
Phone: (425)452-8000
Fax: (425)452-1212

CLARK COUNTY WASHINGTON

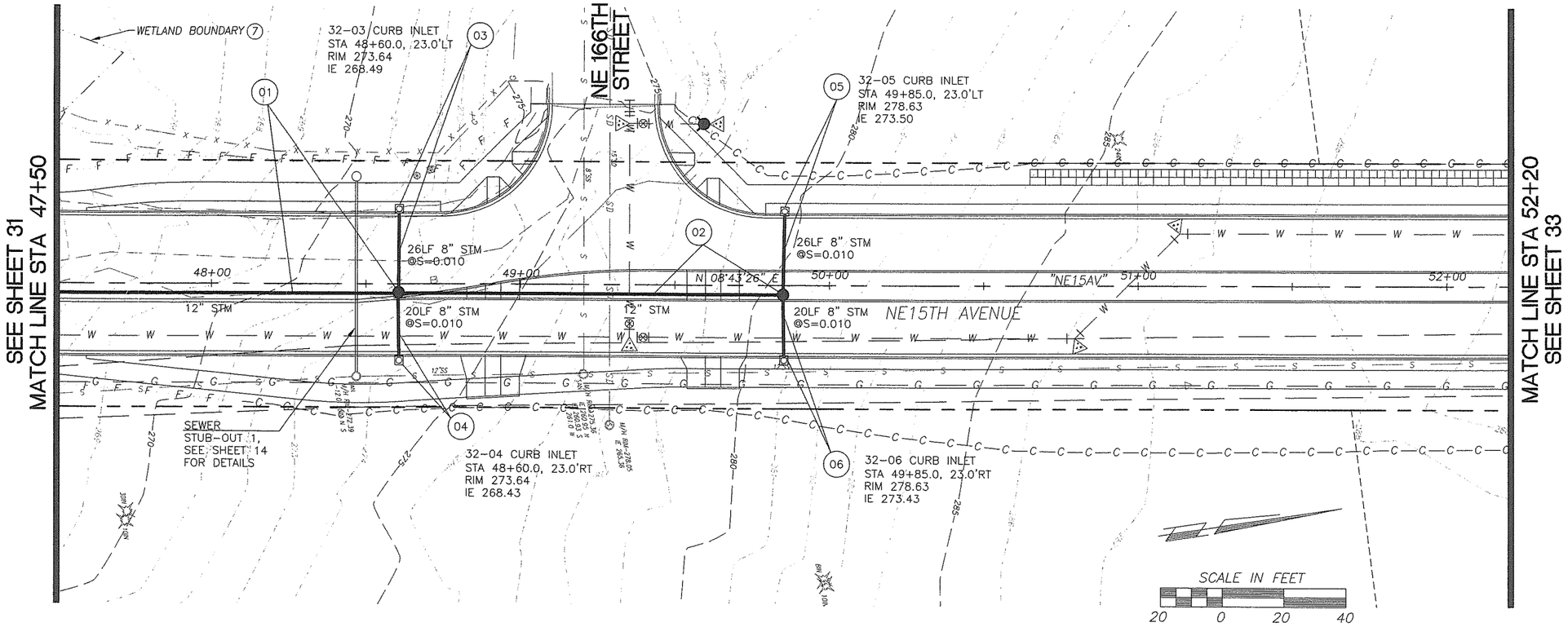

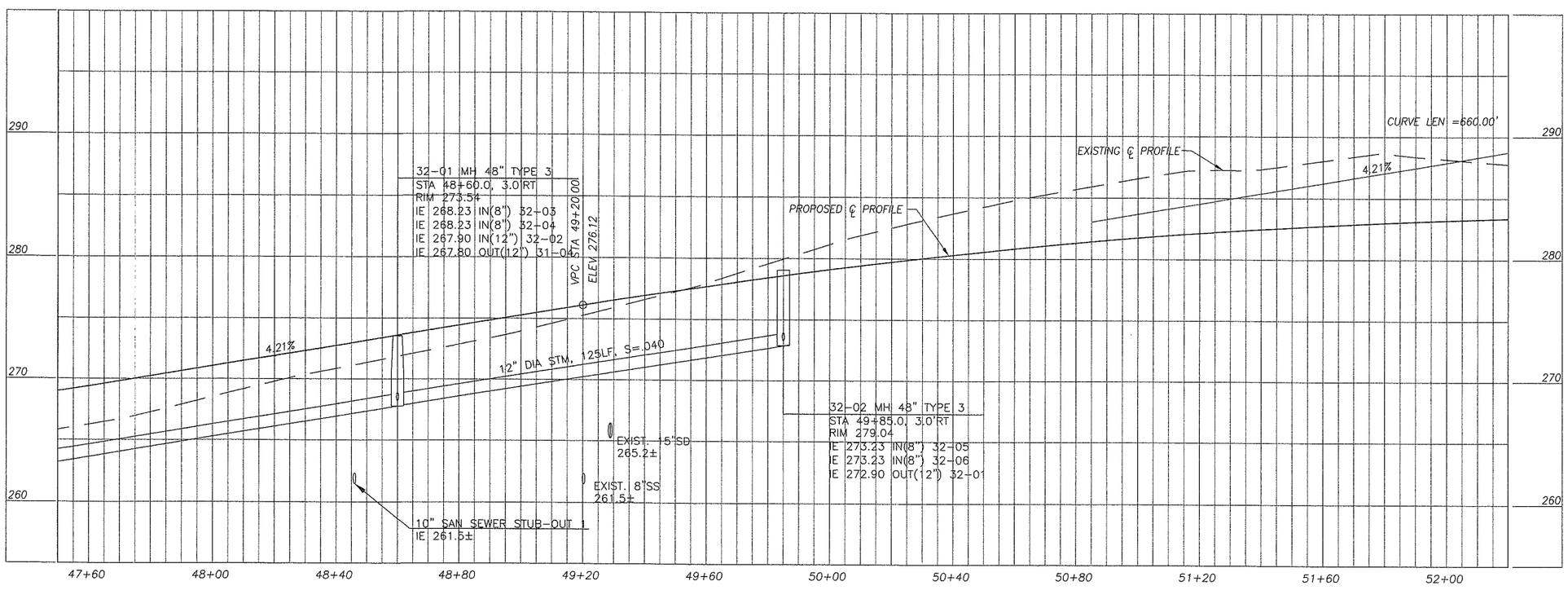

DESIGNED WBH
DRAWN WBH
CRP 382822
HOR. 1" = 20'
VERT. 1" = 5'
DATE 10/31/2005
DWG: NE150P03
SHEET 32 OF 73

CALL 48 HOURS BEFORE YOU DIG
1-800-553-4344
"It's the Law"
NORTHWEST UTILITIES NOTIFICATION CENTER

DESIGN & ENGINEERING DIVISION

NE 15TH AVENUE
STA 47+50 TO STA 52+20

WILLIAM BURKE HICKEY
STATE OF WASHINGTON
REGISTERED PROFESSIONAL ENGINEER
EXPIRES: 04/25/07

JACOBS
JACOBS CIVIL INC.
600 108th Avenue NE.
Suite 700
Bellevue, WA 98004
Phone: (425)452-8000
Fax: (425)452-1212

CLARK COUNTY WASHINGTON

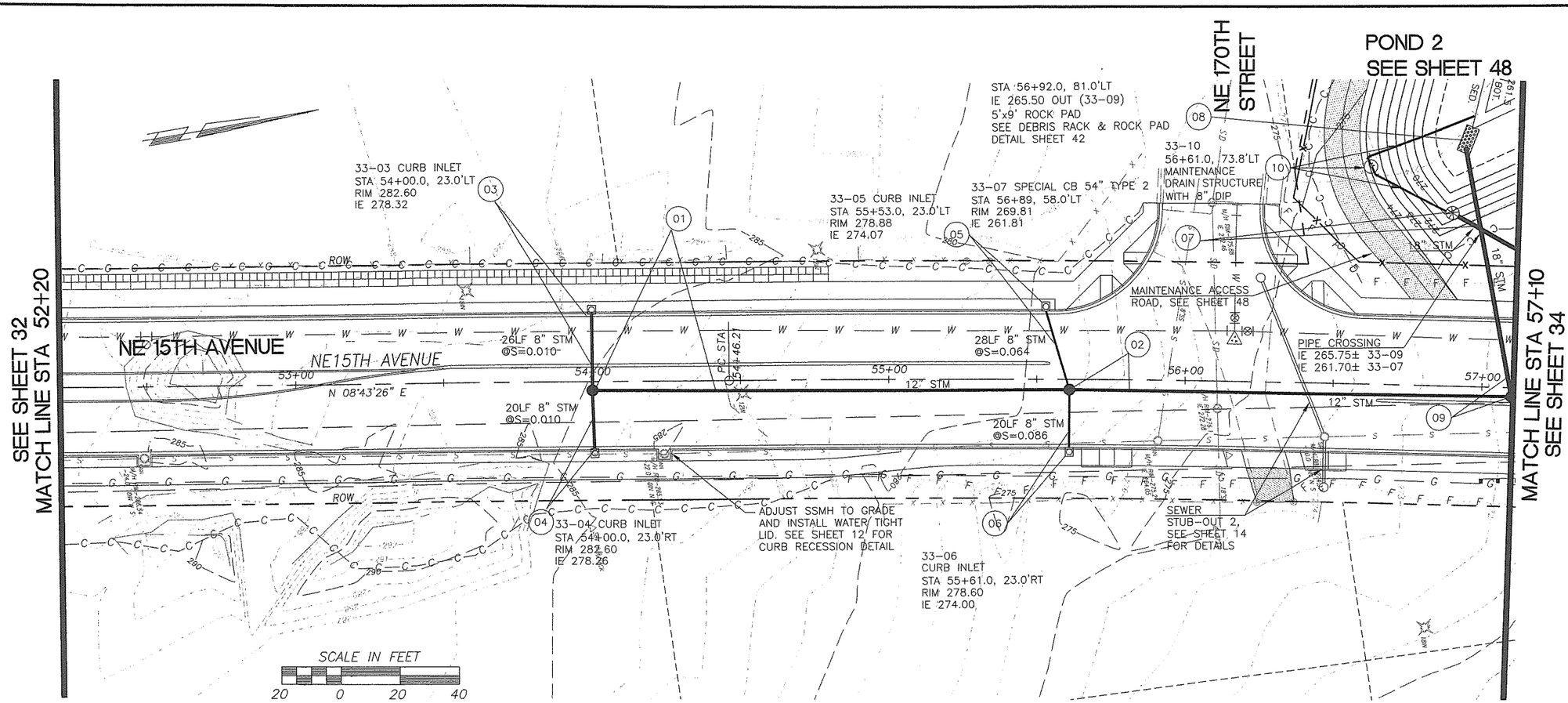

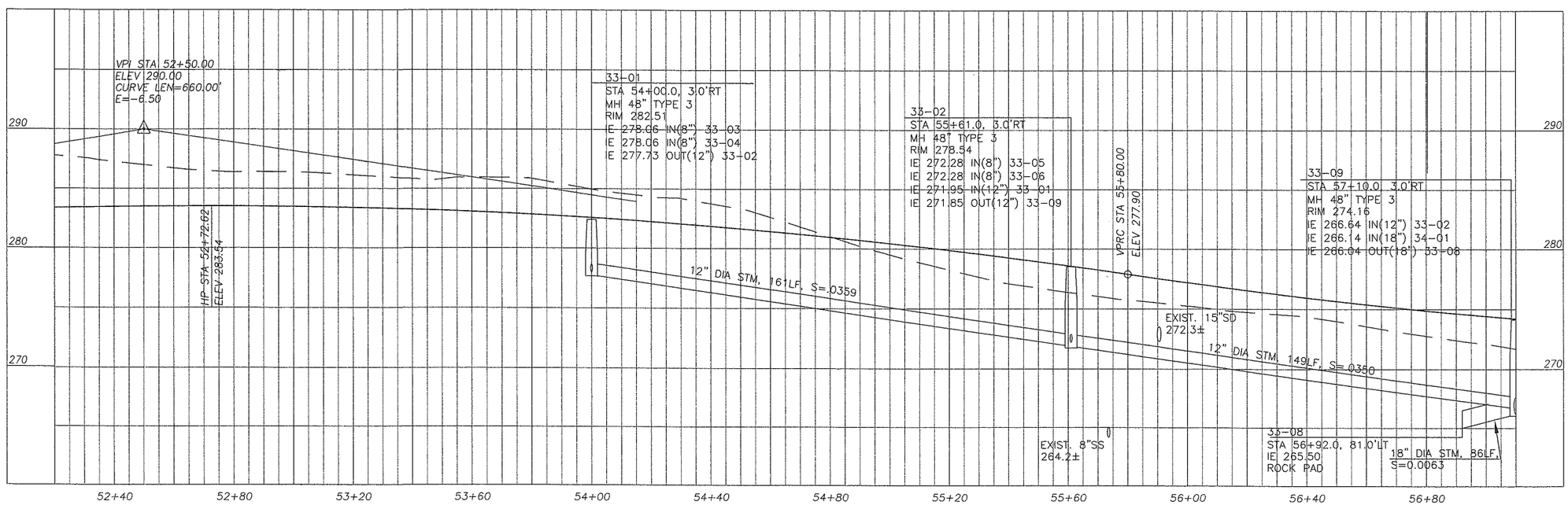

DESIGNED	PR
DRAWN	BE
CRP	382822
HOR.	1" = 20'
VERT.	1" = 5'
DATE	10/31/2005
DWG.	NE15DP04
SHEET 33	OF 73

CALL 48 HOURS BEFORE YOU DIG
1-800-553-4344
"It's the Law"
NORTHWEST UTILITIES NOTIFICATION CENTER

DESIGN & ENGINEERING DIVISION

NE 15TH AVENUE
STA 52+20 TO STA 57+10

WILLIAM BURKE HICKEY
STATE OF WASHINGTON
REGISTERED PROFESSIONAL ENGINEER
EXPIRES: 04/25/07

JACOBS

JACOBS CIVIL INC.
600 108th Avenue NE,
Suite 700
Bellevue, WA 98004
Phone: (425)452-8000
Fax: (425)452-1212

CLARK COUNTY WASHINGTON

POND 2, SEE SHEET 48

SEE SHEET 33
MATCH LINE STA 57+10

MATCH LINE STA 61+80
SEE SHEET 35

169LF 18" STM
@S=0.0089

34-13 MH 48" TYPE 3
STA 57+27.2, 37.8'LT
RIM 272.00
IE 261.40 IN(18") 32-03
IE 261.40 IN(18") 33-07
IE 261.30 IN(18") 34-14

CONCRETE BLOCK WALL,
SEE SHEETS 16 &17

34-14 MH 48" TYPE 3
STA 58+14.8, 11.4'LT
RIM 272.63
IE 251.5±
CONNECT TO EXISTING
30" PIPE

34-05 CURB INLET
STA 57+50, 23.0'LT
RIM 273.58
IE 267.67

92LF 18" STM
@S=0.1070

34-07 COMB. CURB INLET
STA 58+63, 23.0'LT
RIM 272.75
IE 268.36

34-09 CURB INLET
STA 59+90.0, 23.0'LT
RIM 273.80
IE 269.40

34-11 CURB INLET
STA 61+40.0, 23.0'LT
RIM 277.70
IE 273.32

SCALE IN FEET
20 0 20 40

42LF 18" STM
@S=0.0098

26LF 8" STM
@S=0.010

18" STM

18" STM 58+00

18LF 8" STM
@S=0.010

18" STM

59+00

11LF 8" STM
@S=0.020

12" STM

60+00

61+00

8LF 8" STM
@S=0.020

20LF 8" STM
@S=0.010

9LF 8" STM
@S=0.010

19LF 8" STM
@S=0.010

35LF 8" STM
@S=0.010

NE 15TH AVENUE

38LF 8" STM
@S=0.010

34-06 CURB INLET
STA 57+50.0, 23.0'RT
RIM 273.58
IE 267.64

34-15 CATCH BASIN TYPE 1
STA 58+63.0, 3.75'RT
RIM 272.60
IE 268.27 IN(8") 34-08
IE 268.27 OUT(8") 34-02

34-08 COMB. CURB INLET
STA 58+63.0, 23.0'RT
RIM 272.75
IE 268.46

34-10 CURB INLET
STA 59+90.0, 23.0'RT
RIM 273.80
IE 269.53

SEWER
STUB-OUT 3,
SEE SHEET 14
FOR DETAILS

34-12 CURB INLET
STA 61+40.0, 23.0'RT
RIM 277.70
IE 273.54

34-01 MH 48" TYPE 3
STA 57+50.0, 3.0'RT
RIM 273.47
IE 267.41 IN(8") 34-05
IE 267.41 IN(8") 34-06
IE 266.58 IN(18") 34-02
IE 266.48 OUT(18") 33-09

34-02 MH 48" TYPE 3
STA 58+63.0, 5.0'LT
RIM 272.60
IE 268.18 IN(8") 34-07
IE 268.18 IN(8") 34-15
IE 267.35 IN(18") 34-03
IE 267.25 OUT(18") 34-01

34-03 MH 48" TYPE 3
STA 59+90.0, 11.8'LT
RIM 273.51
IE 269.18 IN(8") 34-09
IE 269.18 IN(8") 34-10
IE 268.85 IN(12") 34-04
IE 268.25 OUT(18") 34-02

34-04 MH 48" TYPE 3
STA 61+40.0, 15.1'LT
RIM 276.91
IE 273.16 IN(8") 34-11
IE 273.16 IN(8") 34-12
IE 272.83 IN(12") 35-01
IE 272.73 OUT(12") 34-03

EXISTING CL

FINISHED CL

18" DIA STM, 113LF, S=0.0059

18" DIA STM, 127LF, S=0.0071

12" DIA STM, 150LF, S=0.0259

18" DIA STM, 40LF,
S=0.0085

290 280 270 260 250

57+20 57+60 58+00 58+40 58+80 59+20 59+60 60+00 60+40 60+80 61+20 61+60

DESIGNED PR
DRAWN BE/WSH
CRP 382822
HOR. 1" = 20'
VERT. 1" = 5'
DATE 10/31/2005
DWG: NE15DP05
SHEET 34 OF 73

CALL 48 HOURS BEFORE YOU DIG
1-800-553-4344
"It's the Law"
NORTHWEST UTILITIES NOTIFICATION CENTER

DESIGN & ENGINEERING DIVISION

NE 15TH AVENUE
STA 57+10 TO STA 61+80

BURKE HICKEY WILLIAM STATE OF WASHINGTON REGISTERED PROFESSIONAL ENGINEER
EXPIRES: 04/25/07

JACOBS
JACOBS CIVIL INC.
600 108th Avenue NE,
Suite 700
Bellevue, WA 98004
Phone: (425)452-8000
Fax: (425)452-1212

CLARK COUNTY WASHINGTON

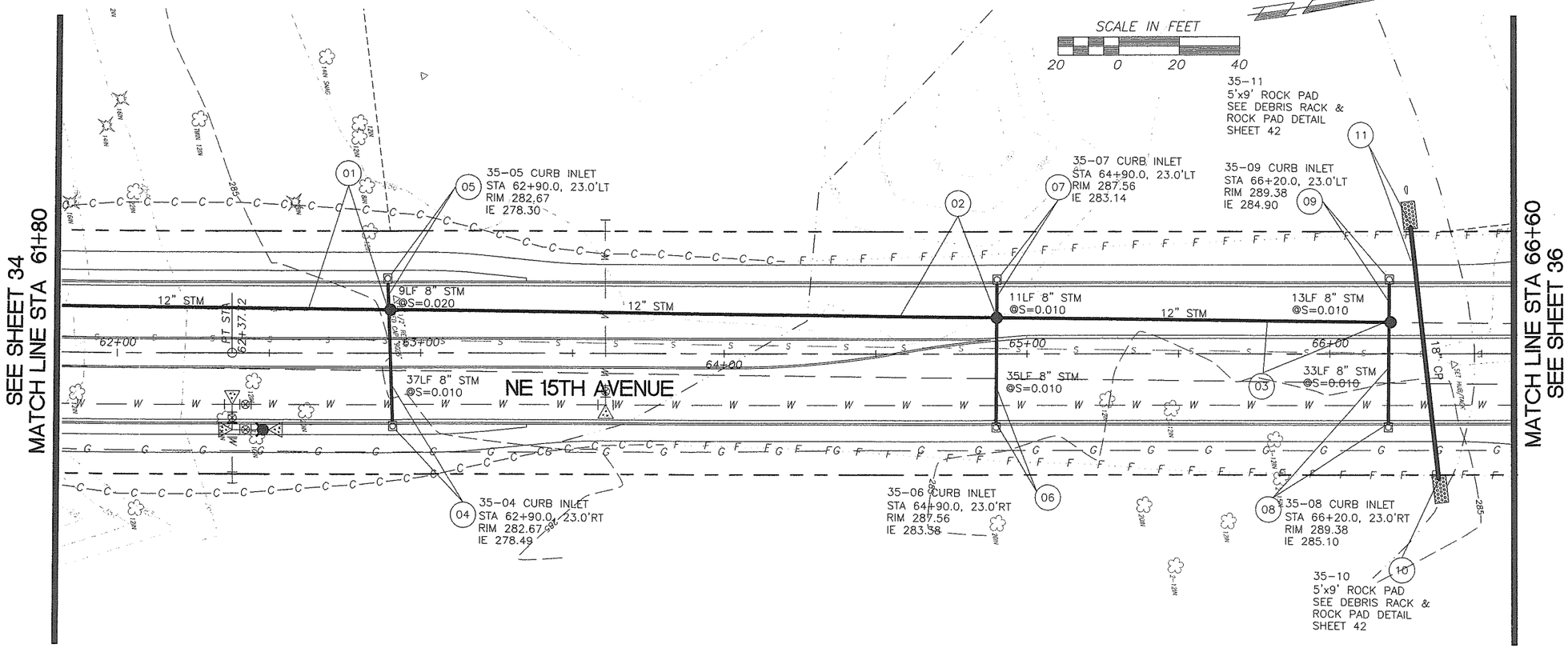

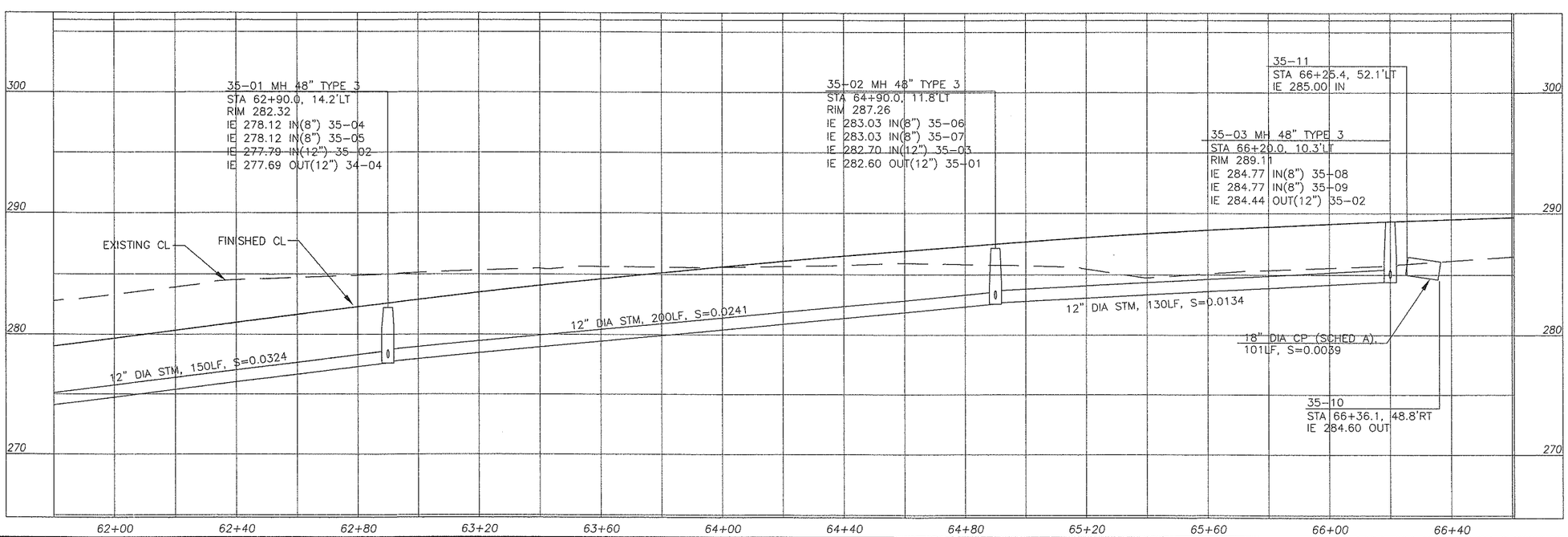

DESIGNED PR
DRAWN BE/WBH
CRP 382822
HOR. 1" = 20'
VERT. 1" = 5'
DATE 10/31/2005
DWG: NE15DP06
SHEET 35 OF 73

CALL 48 HOURS BEFORE YOU DIG
1-800-553-4344
"It's the Law"
NORTHWEST UTILITIES NOTIFICATION CENTER

DESIGN & ENGINEERING DIVISION

NE 15TH AVENUE
STA 61+80 TO STA 66+60

WILLIAM BURKE HICKEY
STATE OF WASHINGTON
PROFESSIONAL ENGINEER
EXPIRES: 04/25/07

JACOBS
JACOBS CIVIL INC.
600 108th Avenue NE,
Suite 700
Bellevue, WA 98004
Phone: (425)452-8000
Fax: (425)452-1212

CLARK COUNTY WASHINGTON

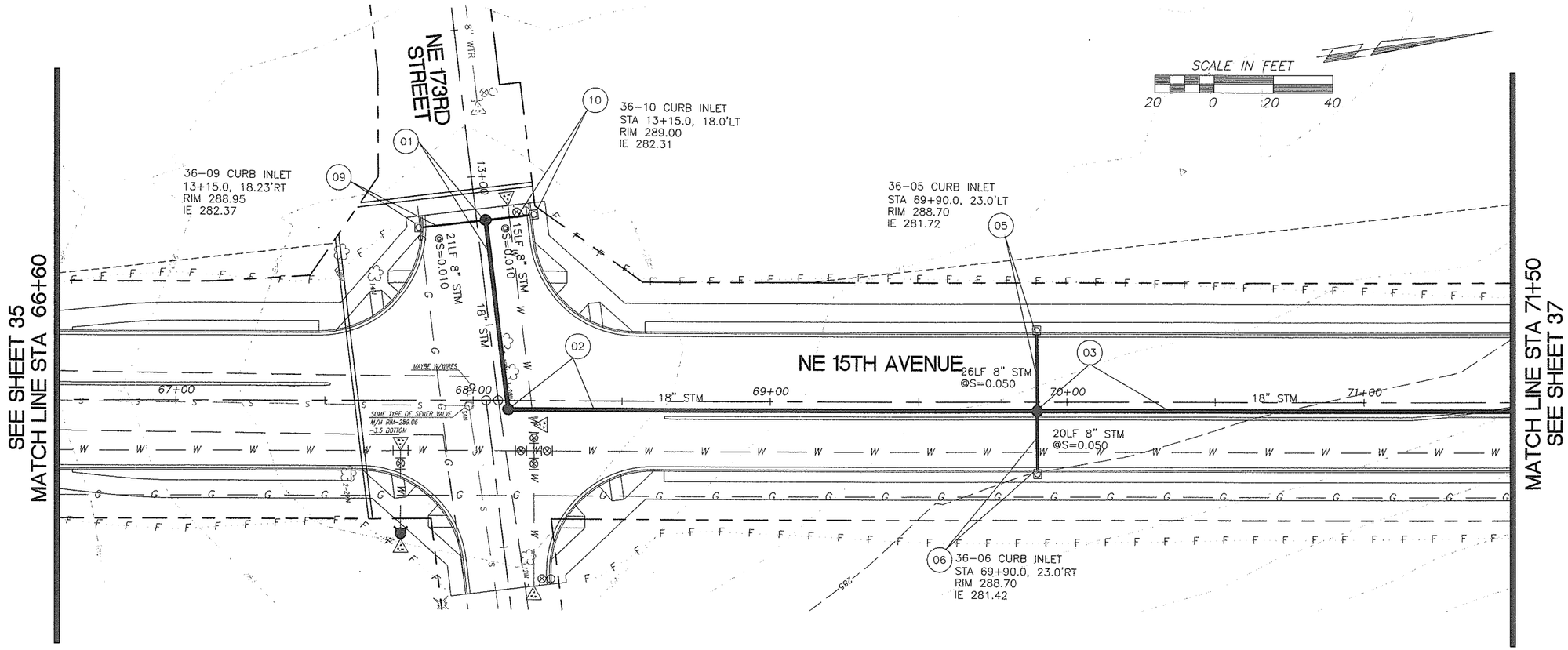

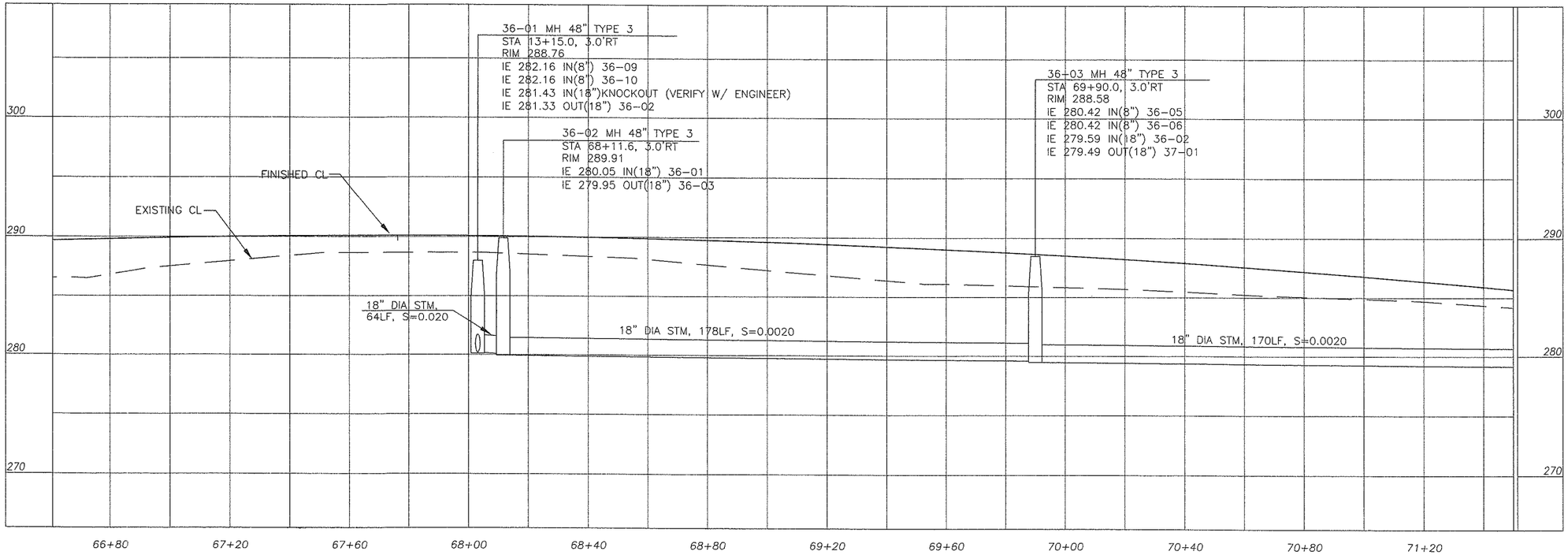

DESIGNED PR
DRAWN BE/WBH
CRP 382822
HOR. 1" = 20'
VERT. 1" = 5'
DATE 10/31/2005
DWG: NE150P07
SHEET 36 OF 73

CALL 48 HOURS BEFORE YOU DIG 1-800-553-4344 "It's the Law" NORTHWEST UTILITIES NOTIFICATION CENTER

DESIGN & ENGINEERING DIVISION

NE 15TH AVENUE
STA 66+60 TO STA 71+50

WILLIAM BURKE HICKEY STATE OF WASHINGTON REGISTERED PROFESSIONAL ENGINEER
EXPIRES: 04/25/07

JACOBS
JACOBS CIVIL INC.
600 108th Avenue NE, Suite 700
Bellevue, WA 98004
Phone: (425)452-8000
Fax: (425)452-1212

CLARK COUNTY WASHINGTON

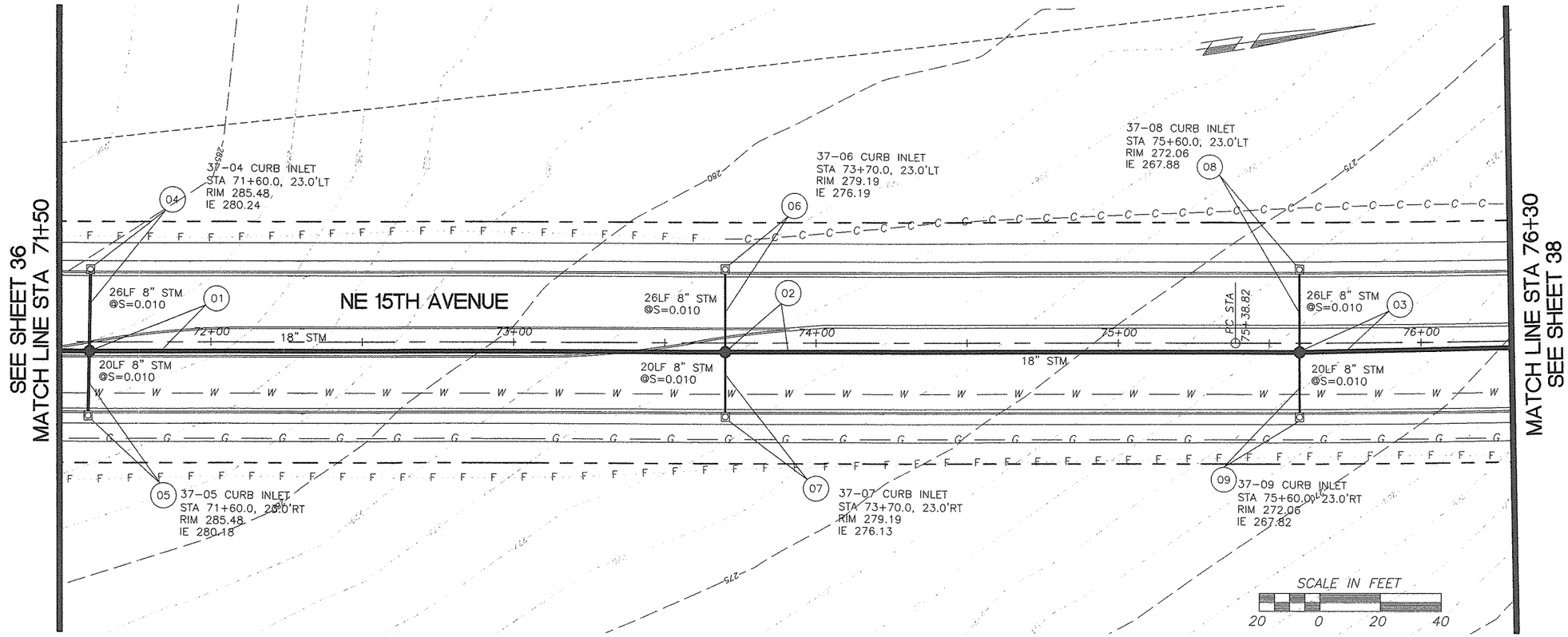

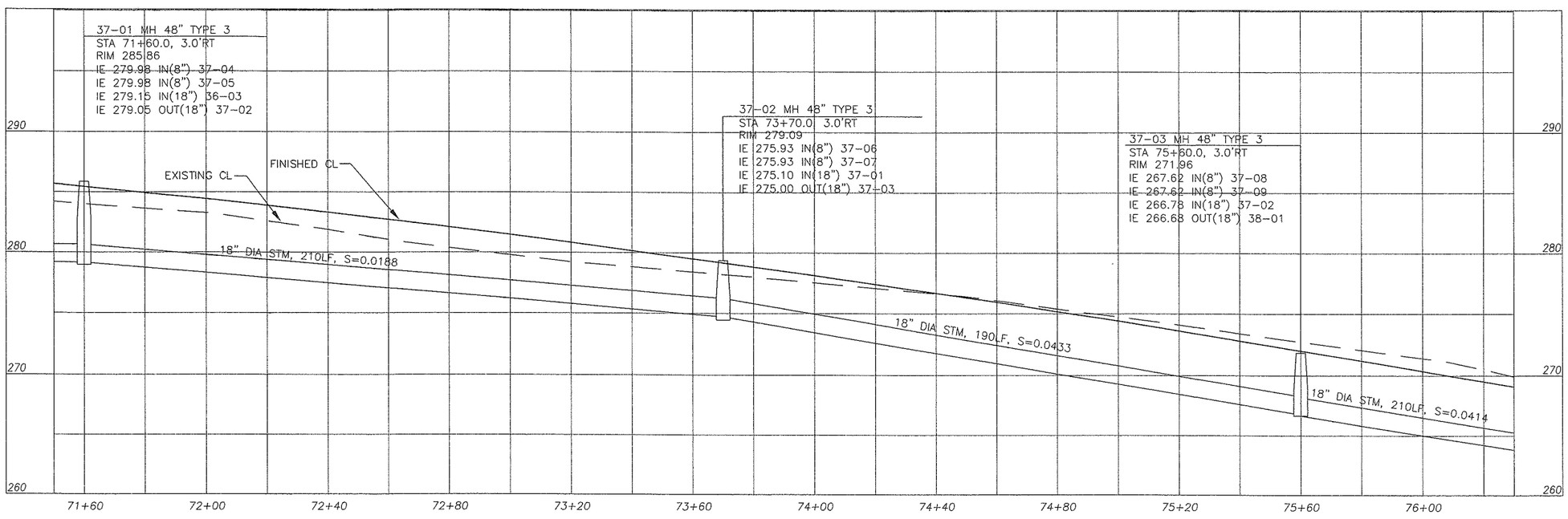

DESIGNED PR
DRAWN BE/WBH
CRP 382822
HOR. 1" = 20'
VERT. 1" = 5'
DATE 10/31/2005
DWG: NE150P08
SHEET 37 OF 73

CALL 48 HOURS BEFORE YOU DIG
1-800-553-4344
"It's the Law"
NORTHWEST UTILITIES NOTIFICATION CENTER

DESIGN & ENGINEERING DIVISION

NE 15TH AVENUE
STA 71+50 TO STA 76+30

WILLIAM BURKE HICKEY
STATE OF WASHINGTON
REGISTERED PROFESSIONAL ENGINEER
EXPIRES: 04/25/07

JACOBS
JACOBS CIVIL INC.
600 108th Avenue NE,
Suite 700
Bellevue, WA 98004
Phone: (425)452-8000
Fax: (425)452-1212

CLARK COUNTY WASHINGTON

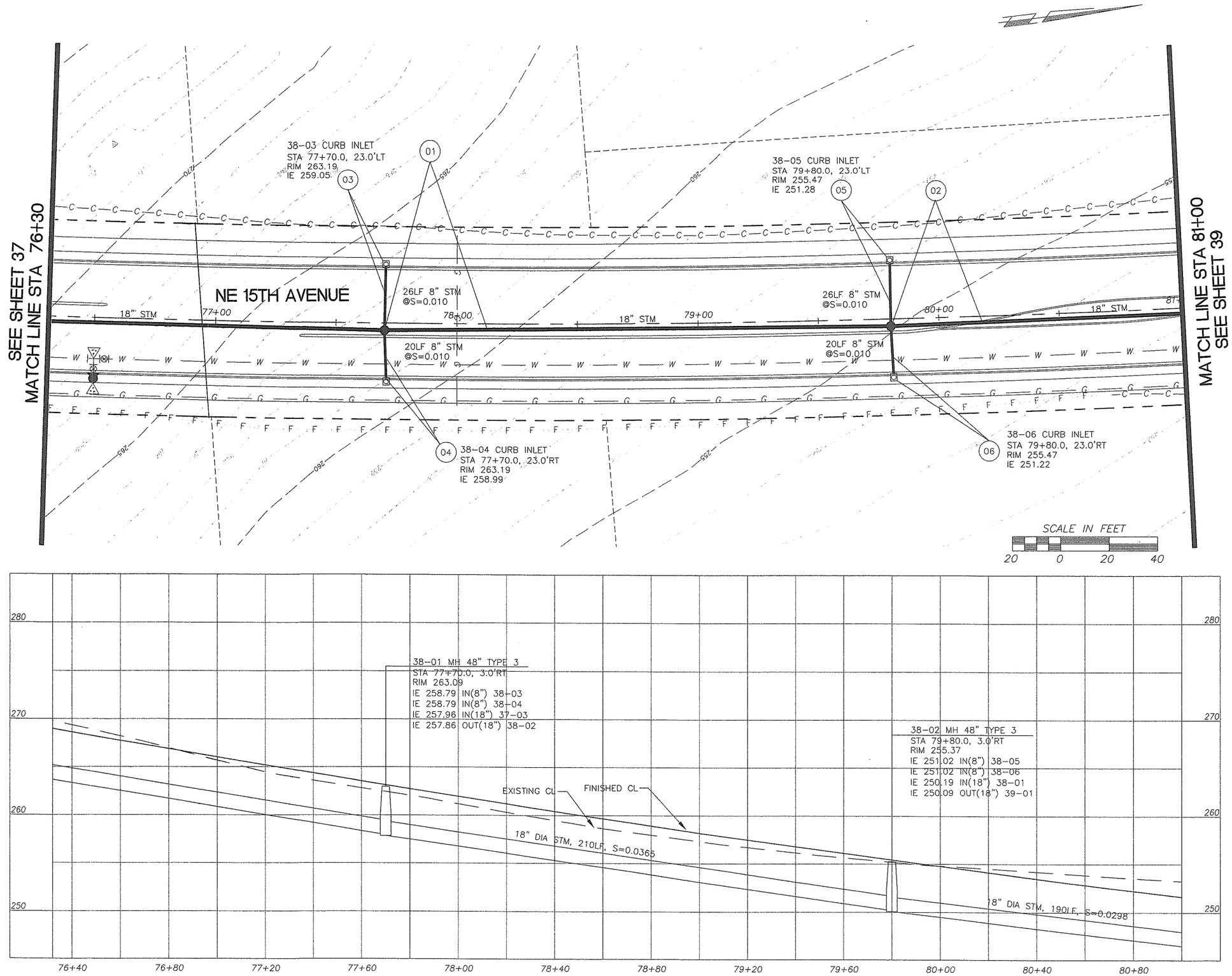

DESIGNED PR
DRAWN BE/WBH
CRP 382822
HOR. 1" = 20'
VERT. 1" = 5'
DATE 10/31/2005
DWG: NE15DP09
SHEET 38 OF 73

CALL 48 HOURS BEFORE YOU DIG
1-800-553-4344
"It's the Law"
NORTHWEST UTILITIES NOTIFICATION CENTER

DESIGN & ENGINEERING DIVISION

NE 15TH AVENUE
STA 76+30 TO STA 81+00

WILLIAM BURKE HICKEY
STATE OF WASHINGTON
PROFESSIONAL ENGINEER
EXPIRES: 04/25/07

JACOBS

JACOBS CIVIL INC.
600 108th Avenue NE,
Suite 700
Bellevue, WA 98004
Phone: (425)452-8000
Fax: (425)452-1212

CLARK COUNTY WASHINGTON

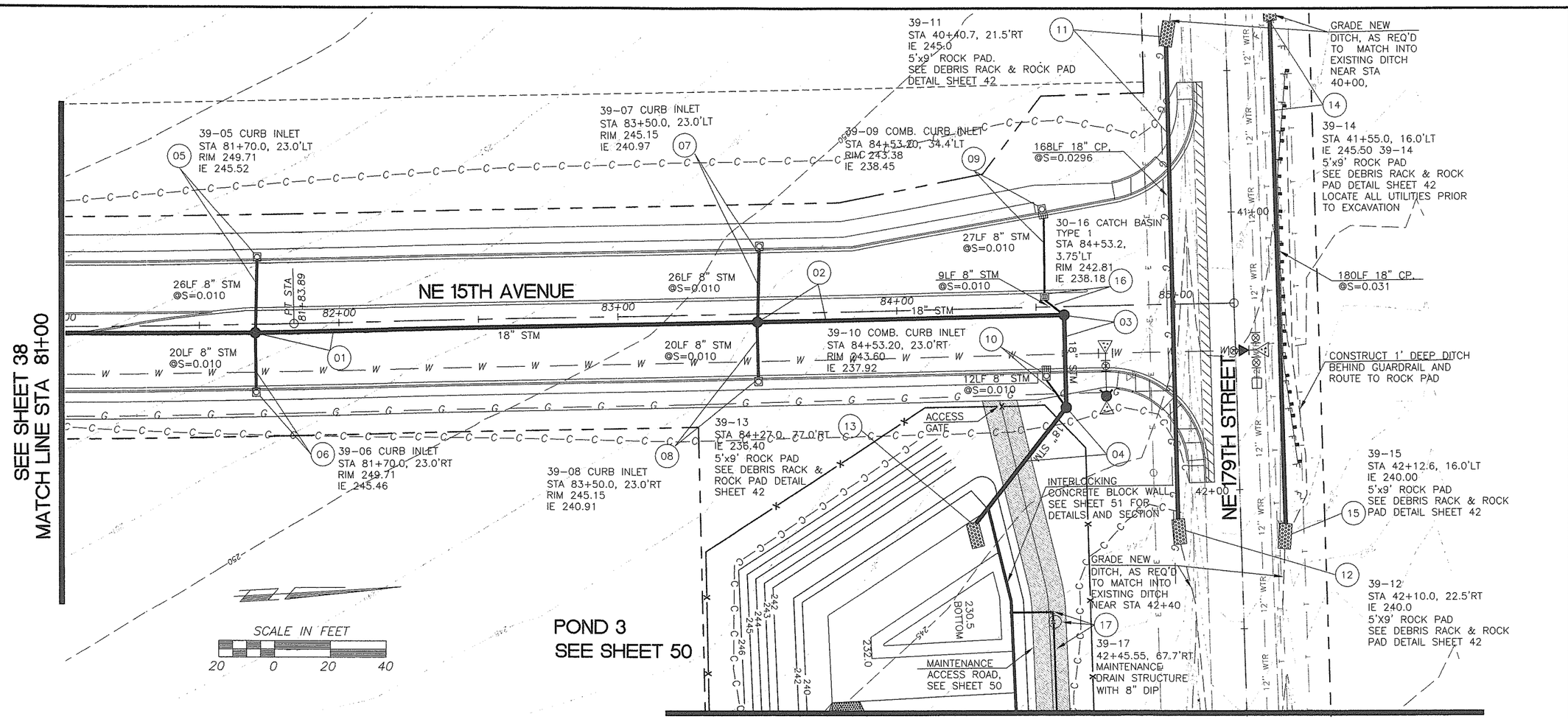

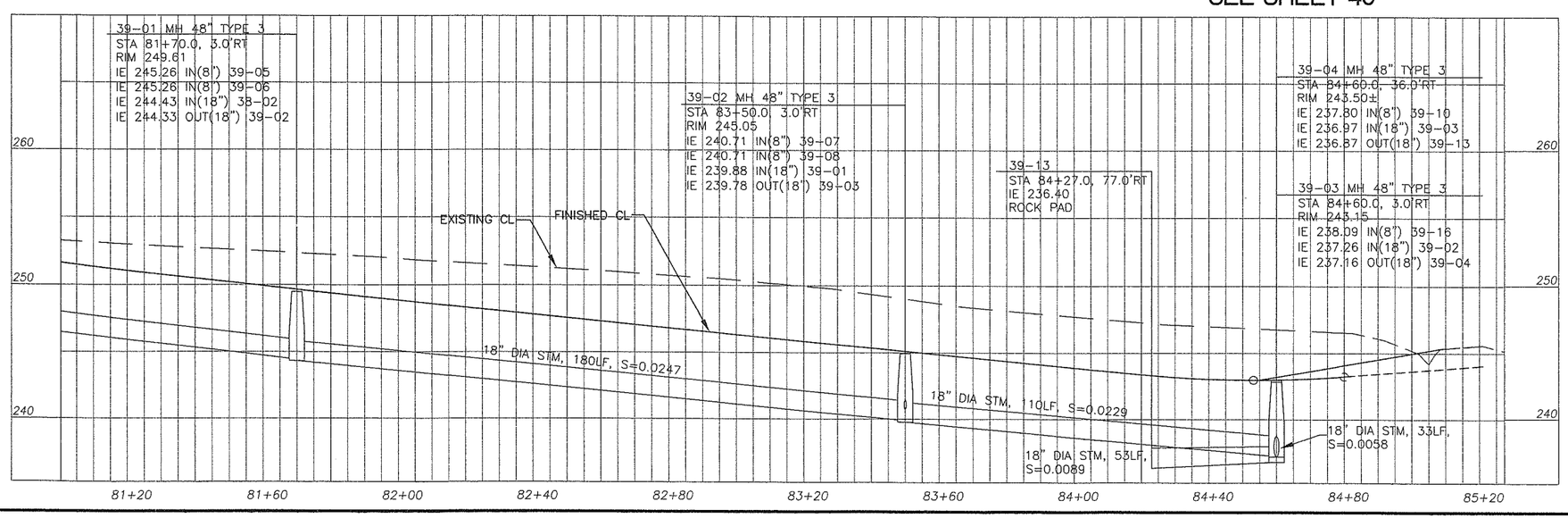

DESIGNED PR
DRAWN BE/WBH
CRP 382822
HOR. 1" = 20'
VERT. 1" = 5'
DATE 10/31/2005
DWG: NE150P10
SHEET 39 OF 73

CALL 48 HOURS BEFORE YOU DIG
1-800-553-4344
"It's the Law"
NORTHWEST UTILITIES NOTIFICATION CENTER

DESIGN & ENGINEERING DIVISION

NE 15TH AVENUE
STA 81+00 TO E.O.P.

WILLIAM BURKE HICKEY
STATE OF WASHINGTON
REGISTERED PROFESSIONAL ENGINEER
EXPIRES: 04/25/07

JACOBS
JACOBS CIVIL INC.
600 108th Avenue NE,
Suite 700
Bellevue, WA 98004
Phone: (425)452-8000
Fax: (425)452-1212

CLARK COUNTY WASHINGTON

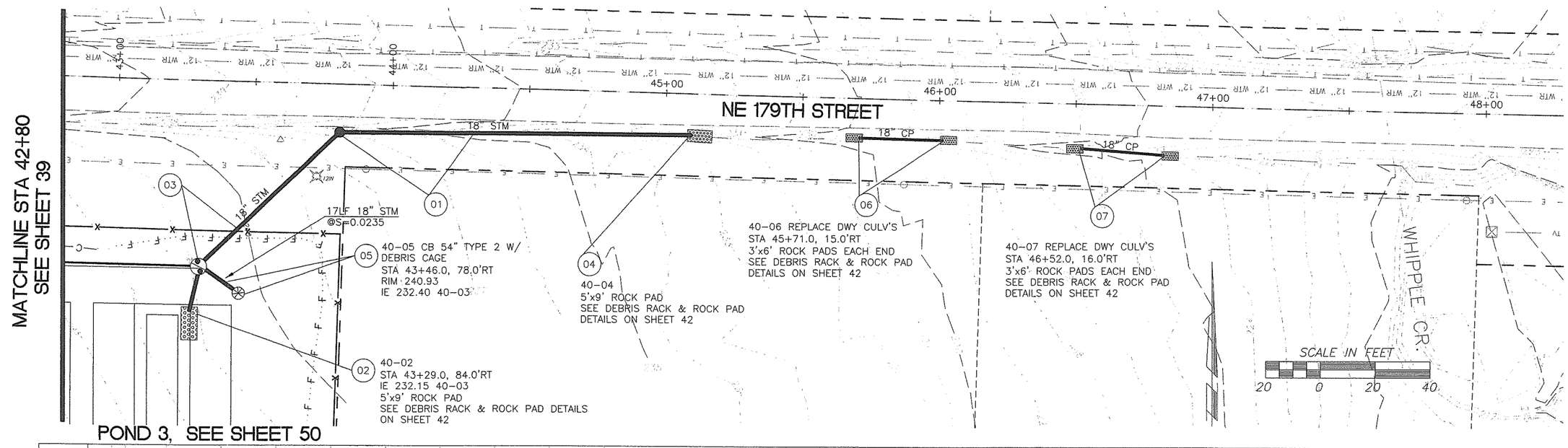

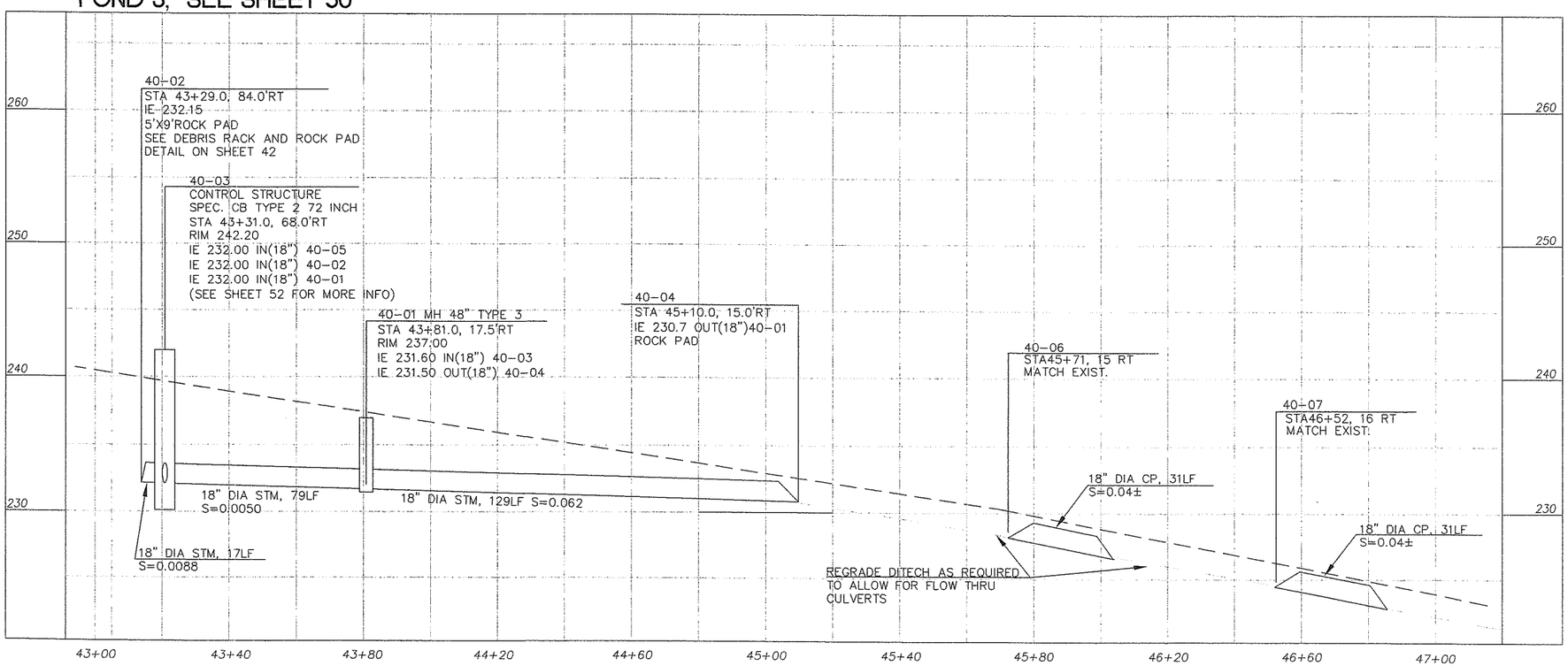

DESIGNED TJN
DRAWN TJN/WBH
CRP 382822
HOR. 1" = 20'
VERT. 1" = 5'
DATE 10/31/2005
DWG: NE15DP12
SHEET 40 OF 73

CALL 48 HOURS BEFORE YOU DIG
1-800-553-4344
"It's the Law"
NORTHWEST UTILITIES NOTIFICATION CENTER

DESIGN & ENGINEERING DIVISION

NE 179TH STREET
STA 42+80 TO E.O.P.

WILLIAM BURKE HICKEY
STATE OF WASHINGTON
REGISTERED PROFESSIONAL ENGINEER
EXPIRES: 04/25/07

JACOBS
JACOBS CIVIL INC.
600 108th Avenue NE,
Suite 700
Bellevue, WA 98004
Phone: (425)452-8000
Fax: (425)452-1212

CLARK COUNTY WASHINGTON

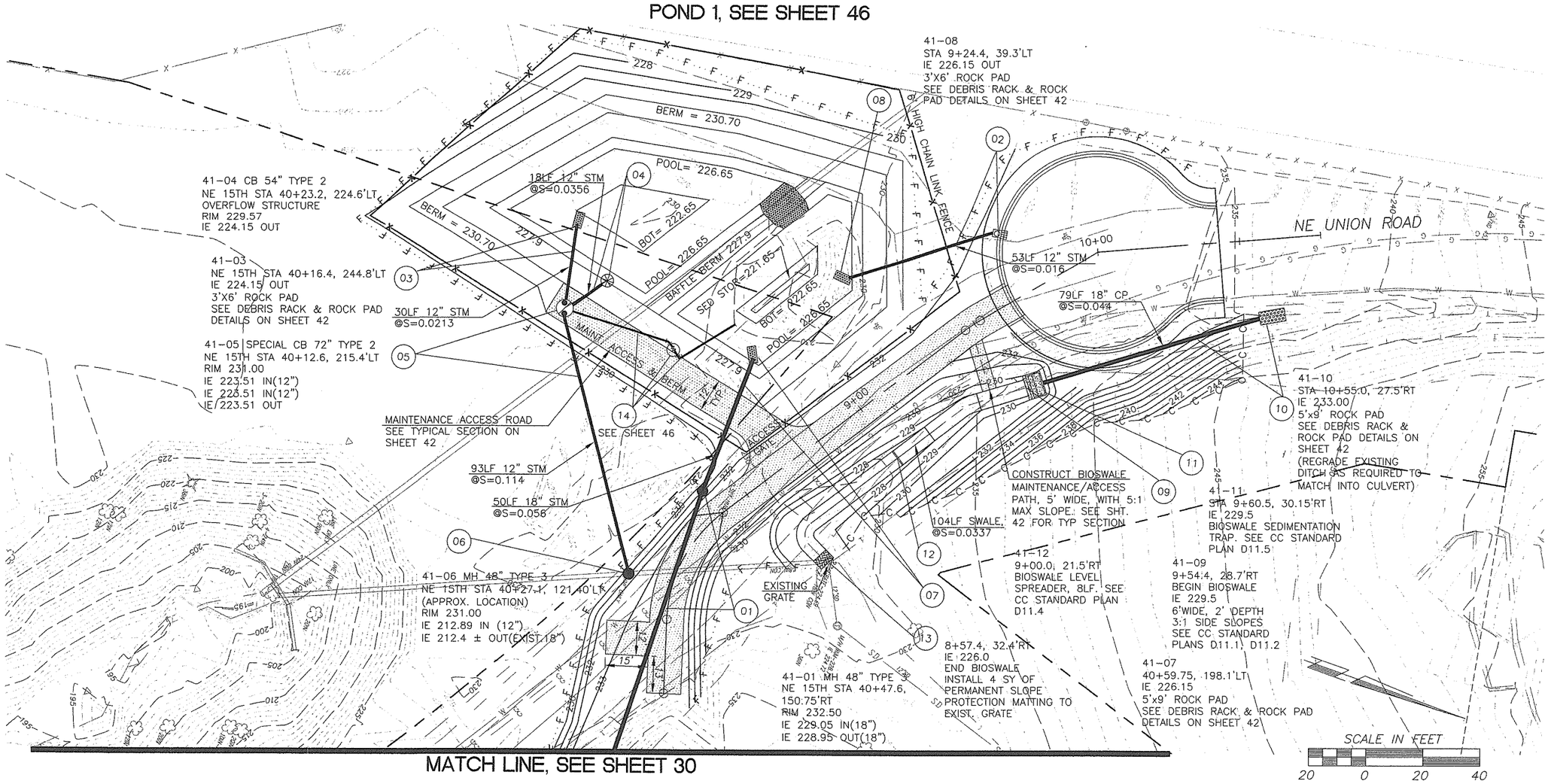

MATCH LINE, SEE SHEET 30

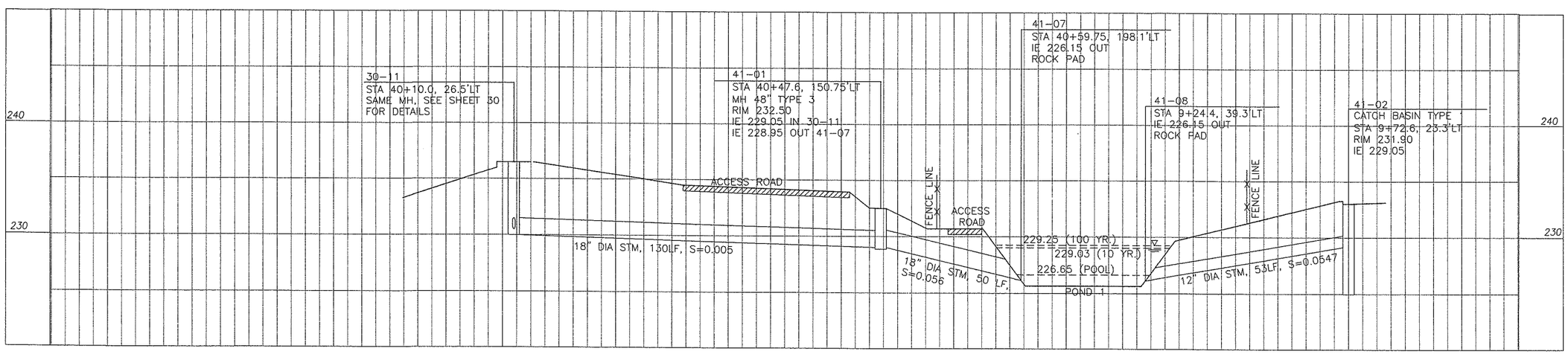

DESIGNED WBH
DRAWN WBH
CRP 382822
HOR. 1" = 20'
VERT. 1" = 5'
DATE 10/31/2005
DWG: NE150P11
SHEET 41 OF 73

CALL 48 HOURS BEFORE YOU DIG 1-800-553-4344 "It's the Law"
NORTHWEST UTILITY NOTIFICATION CENTER

DESIGN & ENGINEERING DIVISION

NE UNION ROAD
CUL-DE-SAC

WILLIAM DURKEE HICKEY
STATE OF WASHINGTON
REGISTERED PROFESSIONAL ENGINEER
EXPIRES: 04/25/07

JACOBS

JACOBS CIVIL INC.
600 108th Avenue NE,
Suite 700
Bellevue, WA 98004
Phone: (425)452-8000
Fax: (425)452-1212

CLARK COUNTY WASHINGTON

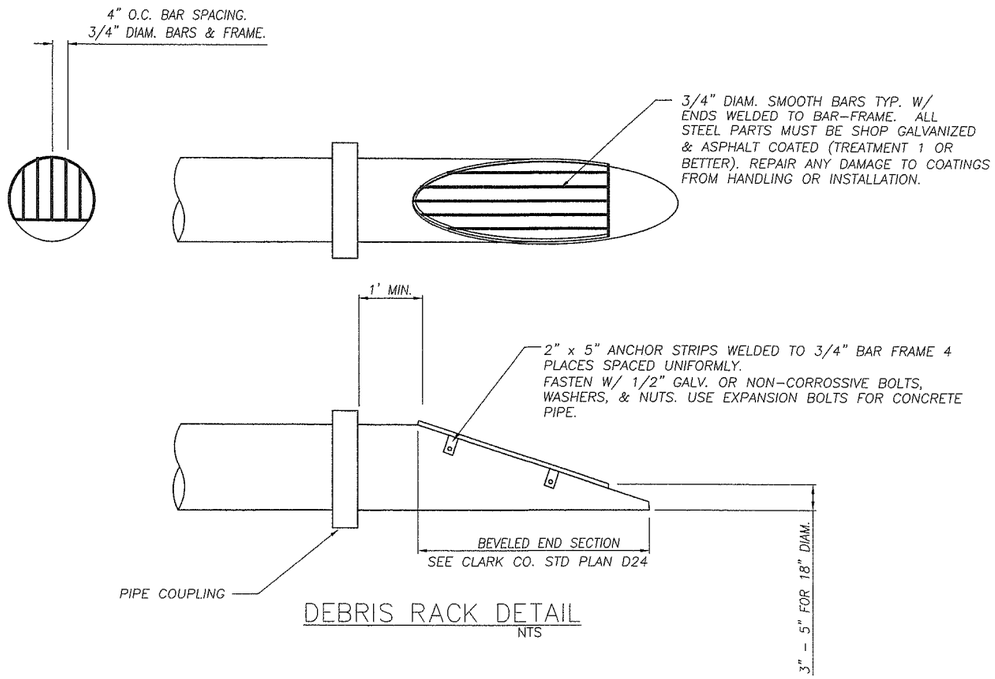

DEBRIS RACK DETAIL
NTS

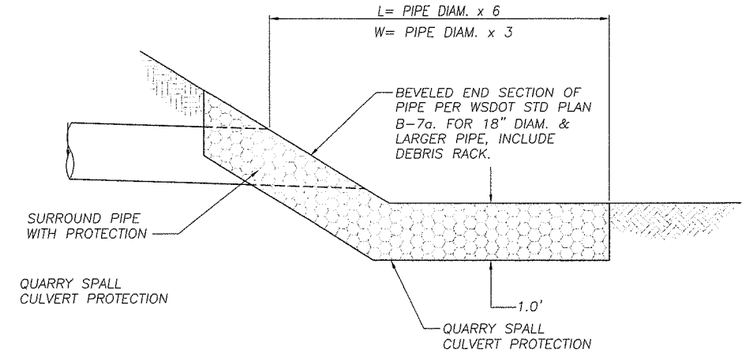

ROCK PAD DETAIL
NTS

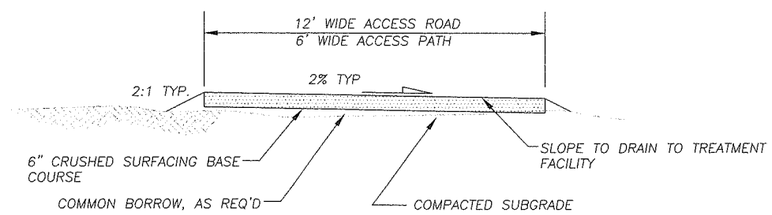

ACCESS MAINTENANCE ROAD & PATH
TYPICAL SECTION

DESIGNED TJN
DRAWN DMO
CRP 382822
HOR. NONE
VERT. NONE
DATE 10/31/2005
DWG: NE15DD01
SHEET 42 OF 73

CALL 48 HOURS BEFORE YOU DIG
1-800-553-4344
"It's the Law"
NORTHWEST UTILITIES NOTIFICATION CENTER

DESIGN & ENGINEERING DIVISION

NE 15TH AVENUE
DRAINAGE DETAILS

WILLIAM BURKE HICKEY
STATE OF WASHINGTON
REGISTERED PROFESSIONAL ENGINEER
EXPIRES: 01/25/07

JACOBS

JACOBS CIVIL INC.
600 108th Avenue NE,
Suite 700
Bellevue, WA 98004
Phone: (425)452-8000
Fax: (425)452-1212

CLARK COUNTY WASHINGTON

P:\W1427900\10900\700CADD\NE15DD01.DWG

CODE DESIG.	LOCATION	TRENCH SAFETY SYSTEM L.F.	MAINTENANCE DRAIN STRUCTURE W/ GATE VALVE EACH	QUARRY SPALLS TON	CATCH BASIN TYPE 2 54 IN. DIAM. W/ DEBRIS CAGE EACH	CULV. PIPE 12 IN. DIAM. L.F.	CULV. PIPE 18 IN. DIAM. L.F.	MANHOLE TYPE 3 48 IN. DIAM. EACH	CURB INLET EACH	COMBINATION CURB INLET EACH	MANHOLE TYPE 3 48 IN. DIAM. OVER EXISTING LINE EACH	CATCH BASIN TYPE 1 EACH	CATCH BASIN TYPE 2 72 IN. DIAM. W/ BAFFLE TYPE FLOW RESTRICTOR OIL SEPARATOR EACH	DITCH INLET EACH	STORM SEWER PIPE 8 IN. DIAM. L.F.	STORM SEWER PIPE 12 IN. DIAM. L.F.	STORM SEWER PIPE 18 IN. DIAM. L.F.	DUCTILE IRON PIPE 8 IN. DIAM. L.F.	PERM. SLOPE PROTECTION MATTING S.Y.	BIOSWALE SEDIMENTATION TRAP EACH	BIOSWALE LEVEL SPREADER L.F.	CODE DESIG.	REMARKS
DP30-01	37+78.0, 15.50 RT TO 37+26, 18.00 RT	50								1						50						DP30-01	CONNECT TO EXIST. STR.
DP30-02	38+50.0, 16.25 RT TO 37+78.0, 25.0 0RT	68							1							68						DP30-02	
DP30-03	40+00.0, 19.00 RT TO 40+00.0, 3.00 RT	16							1									16				DP30-03	
DP30-04	40+00.0, 3.00 RT TO 40+10.0, 26.50 LT	31						1								31						DP30-04	
DP30-05	41+15.0, 21.50 RT TO 41+15.0, 3.00 RT	15							1						15							DP30-05	
DP30-06	41+15.0, 3.00 RT TO 40+10.0, 26.50 LT	112						1								112						DP30-06	
DP30-07	37+78.0, 25.0 LT TO 37+78.0, 15.50 RT	6												1		6						DP30-07	
DP30-08	37+78.0, 1.75 LT TO 37+78.0, 15.50 RT	14										1			14							DP30-08	INSTALL GRATE ADJACENT TO CURB
DP30-09	39+80.0, 1.87 LT TO 40+00.0, 3.00 RT	19										1						19				DP30-09	INSTALL GRATE ADJACENT TO CURB
DP30-10	41+15.0, 4.75 LT TO 41+15.0, 6.50 RT	11										1			11							DP30-10	INSTALL GRATE ADJACENT TO CURB
DP30-11	40+10.0, 26.50 LT TO 40+47.6, 150.75 LT																					DP30-11	
DP31-01	42+60.0, 3.00 RT TO 41+15.0, 3.00 RT	143						1								143						DP31-01	
DP31-02	44+36.0, 3.00 RT TO 42+60.0, 3.00 RT	176						1								176						DP31-02	
DP31-03	45+20.0, 3.00 RT TO 44+36.0, 3.00 RT	84						1								84						DP31-03	
DP31-04	46+38.0, 3.00 RT TO 45+20.0, 3.00 RT	118						1								118						DP31-04	
DP31-05	42+60.0, 23.00 RT TO 42+60.0, 3.00 RT	20							1						20							DP31-05	
DP31-06	44+36.0, 23.00 LT TO 44+36.0, 3.00 RT	26								1					26							DP31-06	
DP31-07	44+36.0, 23.00 RT TO 44+36.0, 3.00 RT	20							1						20							DP31-07	
DP31-08	45+20.0, 23.00 LT TO 45+20.0 3.00 RT	26							1						26							DP31-08	
DP31-09	45+20.0, 23.00 RT TO 45+20.0 3.00 RT	20							1						20							DP31-09	
DP31-10	46+38.0, 23.00 LT TO 46+38.0 3.00 RT	26							1						26							DP31-10	
DP31-11	46+48.0, 23.00 RT TO 46+38.0 3.00 RT	21							1						21							DP31-11	
DP31-12	45+48.8, 41.30 LT			1																		DP31-12	ROCK PAD
DP31-13	46+30.9, 44.40 LT TO 45+48.8, 41.30 LT	82				82																DP31-13	
DP31-14	46+37.9, 42.30 LT			2																		DP31-14	ROCK PAD
DP31-15	46+56.7, 40.60 RT TO 46+37.9, 42.30 LT	85		2		85																DP31-15	ROCK PAD
DP31-16	42+60.0, 6.25 LT TO 42+60.0, 3.00 RT	9										1			9							DP31-16	
DP32-01	48+60.0, 3.00 RT TO 46+38.0, 3.00 RT	222						1								222						DP32-01	
DP32-02	49+85.0, 3.00 RT TO 48+60.0, 3.00 RT	125						1								125						DP32-02	MH LOCATED IN MEDIAN
DP32-03	48+60.0, 23.00 LT TO 48+60.0, 3.00 RT	26							1						26							DP32-03	
DP32-04	48+60.0, 23.00 RT TO 48+60.0, 3.00 RT	20							1						20							DP32-04	
DP32-05	49+85.0, 23.00 LT TO 49+85.0, 3.00 RT	26							1						26							DP32-05	
DP32-06	49+85.0, 23.00 RT TO 49+85.0, 3.00 RT	20							1						20							DP32-06	
DP33-01	54+00.0, 3.00 RT TO 55+61.0, 3.00 RT	161						1								161						DP33-01	
DP33-02	56+00.0, 3.00 RT TO 57+10.0, 3.00 RT	149						1								149						DP33-02	
DP33-03	54+00.0, 23.00 LT TO 54+00.0, 3.00 RT	26							1						26							DP33-03	
DP33-04	54+00.0, 23.00 RT TO 54+00.0, 3.00 RT	20							1						20							DP33-04	
DP33-05	56+00.0, 23.00 LT TO 56+00.0, 3.00 RT	28							1						28							DP33-05	
DP33-06	56+00.0, 23.00 LT TO 56+00.0, 3.00 RT	20							1						20							DP33-06	
DP33-07	56+89.0, 58.00 LT TO 57+27.2, 37.80 LT	42			1												42					DP33-07	CB T2 54 W/ CAGE
DP33-08	56+92.0, 81.00 LT			2																		DP33-08	ROCK PAD
DP33-09	57+10.0, 3.00 RT TO 59+92.0, 81.0 LT	86						1									86					DP33-09	
DP33-10	56+61.0, 73.80' LT	72	1															72				DP33-10	
	SHEET TOTAL	2241	1	7	1	167	0	12	17	2	0	4	0	1	400	1439	128	107	0	0	0		

DESIGNED TJN
DRAWN TJN
CRP 382822
HOR. NONE
VERT. NONE
DATE 10/31/2005
DWG. NE15SN01
SHEET 43 OF 73

CALL 48 HOURS BEFORE YOU DIG
1-800-553-4344
It's the 'Law'
NORTHWEST UTILITIES NOTIFICATION CENTER

DESIGN & ENGINEERING DIVISION

NE 15TH AVENUE
STRUCTURE NOTES

WILLIAM BURKE HICKEY
STATE OF WASHINGTON
PROFESSIONAL ENGINEER
EXPIRES: 04/25/07

JACOBS

JACOBS CIVIL INC.
600 108th Avenue NE,
Suite 700
Bellevue, WA 98004
Phone: (425)452-8000
Fax: (425)452-1212

CLARK COUNTY WASHINGTON

CODE DESIG.	LOCATION	TRENCH SAFETY SYSTEM	MAINTENANCE DRAIN STRUCTURE W/ GATE VALVE	QUARRY SPALLS	CATCH BASIN TYPE 2 54 IN. DIAM. W/ DEBRIS CAGE	CULV. PIPE 12 IN. DIAM.	CULV. PIPE 18 IN. DIAM.	MANHOLE TYPE 3 48 IN. DIAM.	CURB INLET	COMBINATION CURB INLET	MANHOLE TYPE 3 48 IN. DIAM. OVER EXISTING LINE	CATCH BASIN TYPE 1	CATCH BASIN TYPE 2 72 IN. DIAM. W/ BAFFLE TYPE FLOW RESTRICTOR OIL SEPARATOR	DITCH INLET	STORM SEWER PIPE 8 IN. DIAM.	STORM SEWER PIPE 12 IN. DIAM.	STORM SEWER PIPE 18 IN. DIAM.	DUCTILE IRON PIPE 8 IN. DIAM.	PERM. SLOPE PROTECTION MATTING	BIOSWALE SEDIMENTATION TRAP	BIOSWALE LEVEL SPREADER	CODE DESIG.	REMARKS
		L.F.	EACH	TON	EACH	L.F.	L.F.	EACH	EACH	EACH	EACH	EACH	EACH	EACH	L.F.	L.F.	L.F.	L.F.	S.Y.	EACH	L.F.		
DP34-01	57+50.0, 3.00 RT TO 57+10.0, 3.00 LT	40						1									40					DP34-01	
DP34-02	58+63.0, 5.00 LT TO 57+50.0, 3.00 RT	113						1									113					DP34-02	
DP34-03	59+90.0, 11.80 LT TO 58+63.0, 5.00 LT	127						1									127					DP34-03	
DP34-04	61+40.0, 15.10 LT TO 59+90.0, 11.80 LT	150						1								150						DP34-04	
DP34-05	57+50.0, 23.00 LT TO 57+50.0, 3.00 RT	26							1						26							DP34-05	
DP34-06	57+50.0, 23.00 RT TO 57+50.0, 3.00 RT	20							1						20							DP34-06	
DP34-07	58+63.0, 23.00 LT TO 58+63.0, 5.00 LT	18								1					18							DP34-07	
DP34-08	58+63.0, 23.00 RT TO 58+63.0, 5.00 RT	19								1					19					DP34-08			
DP34-09	59+90.0, 23.00 LT TO 59+90.0, 11.80 LT	11							1						11					DP34-09			
DP34-10	59+90.0, 23.00 RT TO 59+90.0, 11.80 LT	35							1						35					DP34-10			
DP34-11	61+40.0, 23.00 LT TO 61+40.0, 15.10 LT	8							1						8					DP34-11			
DP34-12	61+40.0, 23.00 RT TO 61+40.0, 15.10 LT	38							1						38					DP34-12			
DP34-13	57+27.2, 37.83 LT TO 58+14.8, 11.40 LT	92						1									92			DP34-13			
DP34-14	58+14.8, 11.40 LT										1									DP34-14			MH T3 48IN OVER EX LINE, MATCH CROWN TO EX. CROWN
DP34-15	58+63.0, 3.75 RT TO 58+63.0, 5.00 LT	9										1			9					DP34-15			
DP35-01	62+90.0, 14.20 LT TO 61+40.0, 15.10 LT	150						1								150				DP35-01			
DP35-02	64+90.0, 11.80 LT TO 62+90.0, 14.16 LT	200						1								200				DP35-02			
DP35-03	66+20.0, 10.30 LT TO 64+90.0, 11.80 LT	130						1								130				DP35-03			
DP35-04	62+90.0, 23.00 RT TO 62+90.0, 14.20 LT	37							1						37					DP35-04			
DP35-05	62+90.0, 23.00 LT TO 62+90.0, 14.20 LT	9							1						9					DP35-05			
DP35-06	64+90.0, 23.00 RT TO 64+90.0, 11.80 LT	35							1						35					DP35-06			
DP35-07	64+90.0, 23.00 LT TO 64+90.0, 11.80 LT	11							1						11					DP35-07			
DP35-08	66+20.0, 23.00 RT TO 66+20.0, 10.30 LT	33							1						33					DP35-08			
DP35-09	66+20.0, 23.00 LT TO 66+20.0, 10.30 LT	13							1						13					DP35-09			
DP35-10	66+36.1, 48.80 RT			2																DP35-10	ROCK PAD		
DP35-11	66+25.4, 52.10LT TO 66+36.1, 48.80 RT	101		2			101													DP35-11	ROCK PAD		
DP36-01	13+15.0, 3.00 RT TO 68+11.6, 3.00 RT	64						1									64			DP36-01			
DP36-02	68+11.0, 3.00 RT TO 69+90.0, 3.00 RT	178						1									178			DP36-02			
DP36-03	69+90.0, 3.00 RT TO 71+60.0, 3.00 RT	170						1									170			DP36-03			
DP36-04	NOT USED																			DP36-04			
DP36-05	69+90.0, 23.00 LT TO 69+90.0, 3.00 RT	26							1						26					DP36-05			
DP36-06	69+90.0, 23.00RT TO 69+90.0, 3.00RT	20							1						20					DP36-06			
DP36-07	NOTUSED																			DP36-07			
DP36-08	NOT USED																			DP36-08			
DP36-09	13+15.0, 18.23RT TO 13+15.0, 3.00RT	21							1						21					DP36-09			
DP36-10	13+15.0, 18.00LT TO 13+15.0, 3.00RT	15							1						15					DP36-10			
DP37-01	71+60.0, 3.00 RT TO 73+70.0, 3.00 RT	210						1									210			DP37-01			
DP37-02	73+70.0, 3.00 RT TO 75+60.0, 3.00 RT	190						1									190			DP37-02			
DP37-03	73+60.0, 23.00 LT TO 77+70.0, 3.00 RT	210						1									210			DP37-03			
DP37-04	71+60.0, 23.00 RT TO 71+60.0, 3.00 RT	26							1						26					DP37-04			
DP37-05	71+60.0, 23.00 LT TO 71+60.0, 3.00 RT	20							1						20					DP37-05			
DP37-06	73+70.0, 23.00 RT TO 73+70.0, 3.00 RT	26							1						26					DP37-06			
DP37-07	73+70.0, 23.00 LT TO 73+70.0, 3.00 RT	20							1						20					DP37-07			
DP37-08	75+60.0, 23.00 LT TO 75+60.0, 3.00 RT	26							1						26					DP37-08			
DP37-09	75+60.0, 23.00 RT TO 75+60.0, 3.00 RT	20							1						20					DP37-09			
	SHEET TOTAL	2667	0	4	0	0	101	14	22	2	1	1	0	0	542	630	1394	0	0				

DESIGNED TJN
DRAWN TJN
CRP 382822
HOR. NONE
VERT. NONE
DATE 10/31/2005
DWG: NE15SN02
SHEET 44 OF 73

CALL 48 HOURS BEFORE YOU DIG
1-800-553-4344
"It's the Law"
NORTHWEST UTILITIES NOTIFICATION CENTER

DESIGN & ENGINEERING DIVISION

NE 15TH AVENUE
STRUCTURE NOTES

WILLIAM BURKE HICKEY
STATE OF WASHINGTON
REGISTERED PROFESSIONAL ENGINEER
EXPIRES: 04/25/07

JACOBS

JACOBS CIVIL INC.
600 108th Avenue NE,
Suite 700
Bellevue, WA 98004
Phone: (425)452-8000
Fax: (425)452-1212

CLARK COUNTY WASHINGTON

CODE DESIG.	LOCATION	TRENCH SAFETY SYSTEM L.F.	MAINTENANCE DRAIN STRUCTURE W/ GATE VALVE EACH	QUARRY SPALLS TON	CATCH BASIN TYPE 2 54 IN. DIAM. W/ DEBRIS CAGE EACH	CULV. PIPE 12 IN. DIAM. L.F.	CULV. PIPE 18 IN. DIAM. L.F.	MANHOLE TYPE 3 48 IN. DIAM. EACH	CURB INLET EACH	COMBINATION CURB INLET EACH	MANHOLE TYPE 3 48 IN. DIAM. OVER EXISTING LINE EACH	CATCH BASIN TYPE 1 EACH	CATCH BASIN TYPE 2 72 IN. DIAM. W/ BAFFLE TYPE FLOW RESTRICTOR OIL SEPARATOR EACH	DITCH INLET EACH	STORM SEWER PIPE 8 IN. DIAM. L.F.	STORM SEWER PIPE 12 IN. DIAM. L.F.	STORM SEWER PIPE 18 IN. DIAM. L.F.	DUCTILE IRON PIPE 8 IN. DIAM. L.F.	PERM. SLOPE PROTECTION MATTING S.Y	BIOSWALE SEDIMENTATION TRAP EACH	BIOSWALE LEVEL SPREADER L.F.	CODE DESIG.	REMARKS
DP38-01	77+70.0, 3.00 RT TO 79+80.0, 3.00 RT	210						1									210					DP38-01	
DP38-02	79+80.0, 3.00 RT TO 81+70.0, 3.00 RT	190						1									190					DP38-02	
DP38-03	77+70.0, 23.00 LT TO 77+70.0, 3.00 RT	26							1						26							DP38-03	
DP38-04	77+70.0, 23.00 RT TO 77+70.0, 3.00 RT	20							1						20							DP38-04	
DP38-05	79+80.0, 23.00 LT TO 79+80.0, 3.00 RT	26							1						26							DP38-05	
DP38-06	79+80.0, 23.00 RT TO 79+80.0, 3.00 RT	20							1						20							DP38-06	
DP39-01	81+70.0, 3.00 RT TO 83+50.0, 3.00 RT	180						1									180					DP39-01	
DP39-02	83+50.0, 3.00 RT TO 84+60.0, 3.00 RT	110						1									110					DP39-02	
DP39-03	84+60.0, 3.00 RT TO 84+60.0, 36.00 RT	33						1									33					DP39-03	
DP39-04	84+60.0, 36.00 RT TO 84+27.0, 77.00 RT	53						1									53					DP39-04	
DP39-05	81+70.0, 23.00 LT TO 81+70.0, 3.00 RT	26							1						26							DP39-05	
DP39-06	81+70.0, 23.00 RT TO 81+70.0, 3.00 RT	20							1						20							DP39-06	
DP39-07	83+50.0, 23.00 LT TO 83+50.0, 3.00 RT	26							1						26							DP39-07	
DP39-08	83+50.0, 23.00 RT TO 83+50.0, 3.00 RT	20							1						20							DP39-08	
DP39-09	84+53.2, 34.4 LT TO 84+53.2, 3.75 LT	27								1					27							DP39-09	
DP39-10	84+53.2, 23.00 RT TO 84+60.0, 36.00 RT	12								1					12							DP39-10	
DP39-11	40+40.7, 21.5 RT TO 42+10.0, 22.5 RT	168		2			168															DP39-11	NO PRESSURE TEST REQ'D, ROCK PAD
DP39-12	42+10.0, 22.5 RT			2																		DP39-12	ROCK PAD
DP39-13	84+27.0, 77.00 RT			2																		DP39-13	ROCK PAD
DP39-14	41+55.0, 16.00LT TO 42+12.6, 16.00LT	180		2			180															DP39-14	ROCK PAD
DP39-15	42+12.6, 16.00LT			2																		DP39-15	ROCK PAD
DP39-16	84+53.2, 3.75LT TO 84+60, 3.00RT	9										1			9							DP39-16	
DP39-17	42+45.55, 67.70 RT		1															104				DP39-17	
DP40-01	43+81.0, 17.50 RT TO 45+10.0, 15.00 RT	129						1									129					DP40-01	
DP40-02	43+29.0, 84.00 RT TO 43+31.0, 68.00 RT	17		2													17					DP40-02	ROCK PAD
DP40-03	43+31.0, 68.00 RT TO 43+81.0, 17.50 RT	79											1				79					DP40-03	CB T2 72IN W/ BFROS
DP40-04	45+10.0, 15.00 RT			2																		DP40-04	ROCK PAD
DP40-05	43+46.0, 78.00 RT TO 43+31.0, 68.00 RT	17			1												17					DP40-05	CB T2 54 W/ CAGE
DP40-06	45+71.0, 15.00 RT TO			2			31															DP40-06	REPLACE DWY CULV., NO PRESSURE TEST REQ'D,
DP40-07	46+52.0, 16.00RT			2			31															DP40-07	REPLACE DWY CULV., NO PRESSURE TEST REQ'D,
DP41-01	40+10.0, 26.50 RT TO 40+47.6, 150.75 LT	130						1									130					DP41-01	
DP41-02	9+72.6, 23.30 LT TO 9+24.4, 39.30 LT	53										1				53						DP41-02	
DP41-03	40+16.4, 244.8 LT TO 40+12.6, 215.4 LT	30		1												30						DP41-03	ROCK PAD
DP41-04	40+23.2, 224.6 LT TO 40+12.6, 215.4 LT	18			1											18						DP41-04	OVERFLOW STRUCTURE WITH DEBRIS CAGE
DP41-05	40+12.6, 215.4 LT TO 40+27.1, 121.4 LT	93											1			93						DP41-05	CONTROL STRUCTURE
DP41-06	40+27.1, 121.4 LT										1											DP41-06	CONNECT TO EXISTING PIPE
DP41-07	40+47.6, 150.75 LT TO 40+59.75, 198.1 LT	50		2													50					DP41-07	ROCK PAD
DP41-08	18+74.8, 43.80LT			1																		DP41-08	ROCK PAD
DP41-09	9+54.4, 28.70RT TO 8+57.4, 32.40 LT																					DP41-09	
DP41-10	19+15.6, 23.5 RT	79		2			79															DP41-10	ROCK PAD
DP41-11	9+60.5, 30.15 RT																			1		DP41-11	
DP41-12	9+00, 21.50 RT																				8	DP41-12	
DP41-13	8+57.4, 32.40 RT																		4			DP41-13	
DP41-14	8+60.0, 56.00 LT		1															62				DP41-14	
P2-01	NOT USED																					P2-01	
P2-02	57+33.0, 178.00 LT TO 57+65.8, 204.70 LT	40		2													40					P2-02	ROCK PAD
P2-03	57+65.8, 204.70 LT TO 57+27.20, 37.80 LT	169											1				169					P2-03	CB T2 72IN W/ BFROS
	SHEET 45 TOTAL	2426	2	26	2	0	489	8	8	2	1	2	3	0	232	194	1407	166	4	1	8		
	SHEET 43	2241	1	7	1	167	0	12	17	2	0	4	0	1	400	1439	128	107	0	0	0		
	SHEET 44	2667	0	4	0	0	101	14	22	2	1	1	0	0	542	630	1394	0	0	0	0		
	TOTAL SHEETS	7334	3	37	3	167	590	34	47	6	2	7	3	1	1174	2263	2929	273	4	1	8		

DESIGNED TJN
DRAWN TJN
CRP 382822
HOR. NONE
VERT. NONE
DATE 10/31/2005
DWG: NE15SN03
SHEET 45 OF 73

CALL 48 HOURS BEFORE YOU DIG 1-800-553-4344 "It's the Law" NORTHWEST UTILITIES NOTIFICATION CENTER

DESIGN & ENGINEERING DIVISION

NE 15TH AVENUE STRUCTURE NOTES

WILLIAM BURKE HICKEY STATE OF WASHINGTON REGISTERED PROFESSIONAL ENGINEER
EXPIRES: 04/25/07

JACOBS

JACOBS CIVIL INC.
600 108th Avenue NE,
Suite 700
Bellevue, WA 98004
Phone: (425)452-8000
Fax: (425)452-1212

CLARK COUNTY WASHINGTON

	NORTH	EAST
POND		
A	155176.8	1089393.4
B	155188.4	1089379.7
C	155219.3	1089373.6
D	155203.8	1089399.1
E	155241.6	1089407.2
F	155260.6	1089375.9
G	155264.0	1089385.2
H	155249.8	1089408.9
FENCELINE		
I	155156.0	1089333.2
J	155268.6	1089314.4
K	155313.0	1089373.8
L	155262.1	1089452.6
M	155109.5	1089420.1
BIOSWALE		
O	155346.5	1089397.6
P	155330.5	1089409.5
Q	155328.1	1089412.1
R	155291.8	1089468.4
S	155293.8	1089475.6
T	155298.6	1089477.9

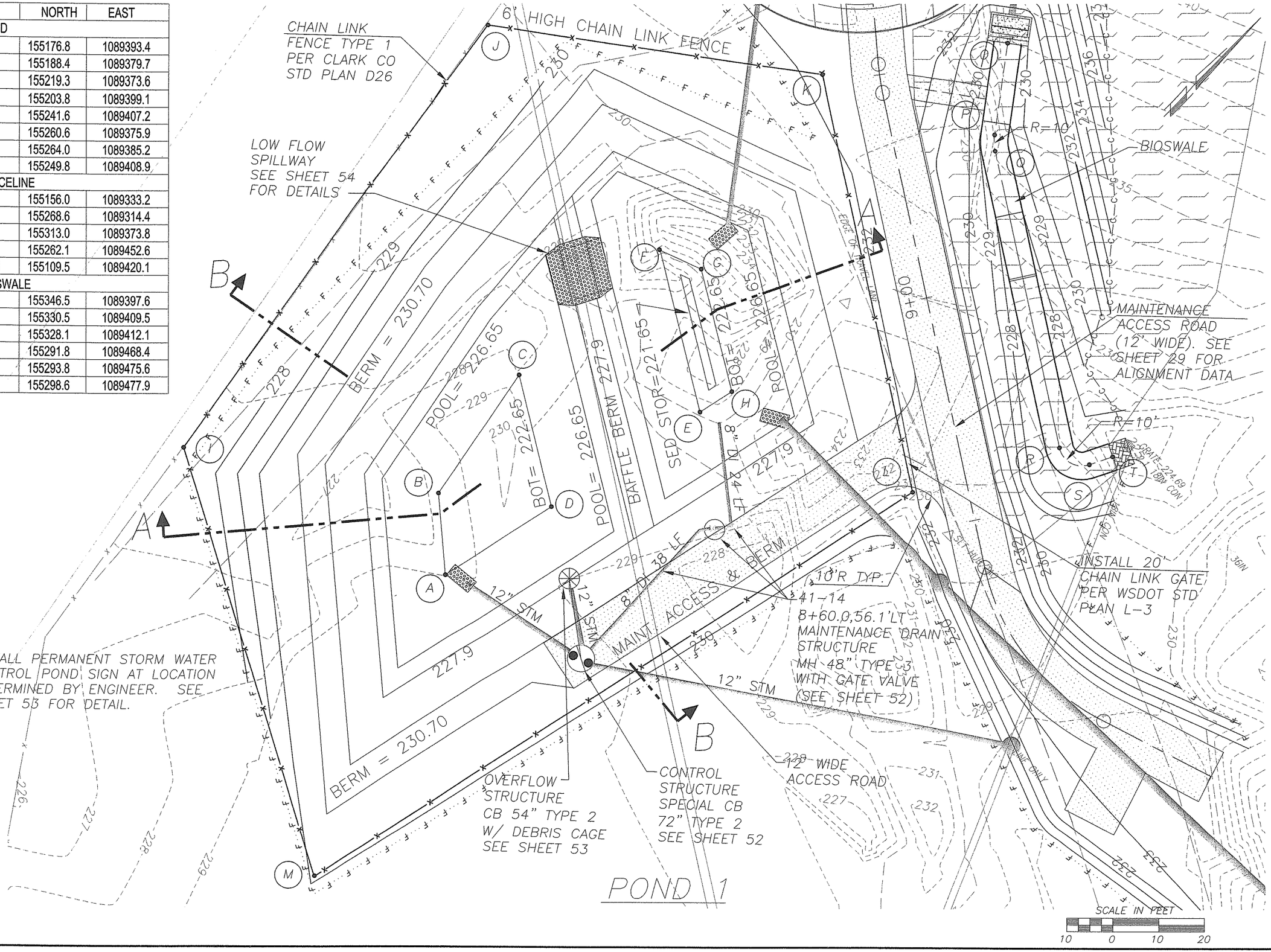

NOTE

1. INSTALL PERMANENT STORM WATER CONTROL POND SIGN AT LOCATION DETERMINED BY ENGINEER. SEE SHEET 53 FOR DETAIL.

DESIGNED TJN
DRAWN TJN
CRP 382822
HOR. 1" = 10'
VERT. N/A
DATE 7/11/2005
DWG: NE15P101
SHEET 46 OF 73

CALL 48 HOURS BEFORE YOU DIG
1-800-553-4344
"It's the Law"
NORTHWEST UTILITIES NOTIFICATION CENTER

DESIGN & ENGINEERING DIVISION

NE 15TH AVENUE
POND NO. 1

WILLIAM BURKE HICKEY
STATE OF WASHINGTON
REGISTERED PROFESSIONAL ENGINEER
EXPIRES: 04/25/07

JACOBS
JACOBS CIVIL INC.
600 108th Avenue NE, Suite 700
Bellevue, WA 98004
Phone: (425)452-8000
Fax: (425)452-1212

CLARK COUNTY WASHINGTON

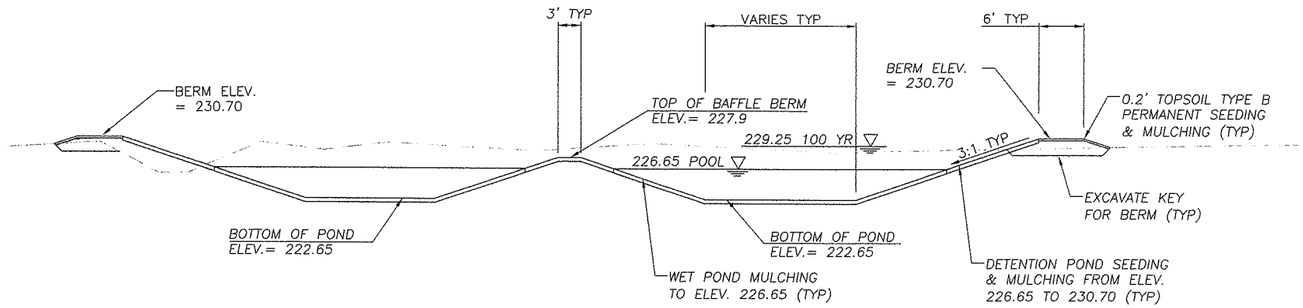

LONGITUDINAL SECTION A–A
NTS

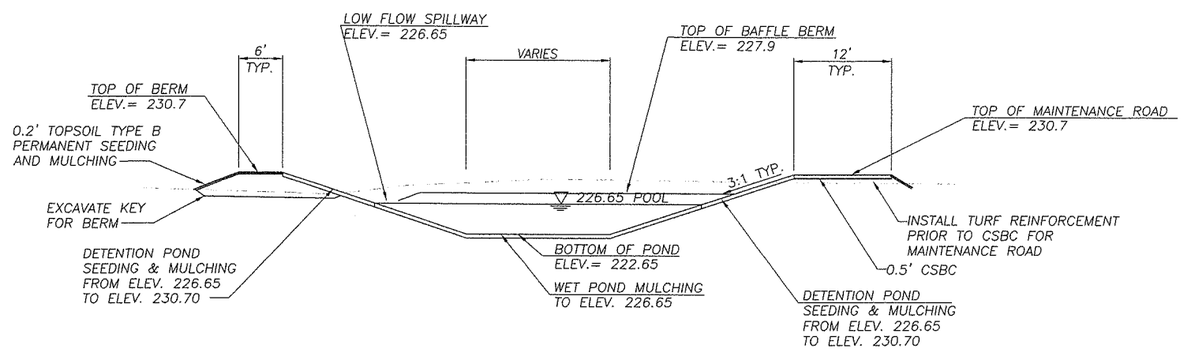

NOTE
IF GROUNDWATER IS ENCOUNTERED DURING EXCAVATION OR AS DIRECTED BY THE ENGINEER THEN PVC POND LINER SHALL BE INSTALLED FOR POND. SEE SHEETS 49 AND 54 AND SECTION 2–09.3(4) OF THE SPECIAL PROVISIONS FOR MORE INFORMATION AND DETAILS ON POND LINERS.

CROSS SECTION B–B
NTS

POND 1

DESIGNED T/N
DRAWN DMO
CRP 382822
HOR. 1" = 10'
VERT. N/A
DATE 10/31/2005
DWG. NE15P102
SHEET 47 OF 73

CALL 48 HOURS BEFORE YOU DIG
1–800–553–4344
"It's the Law"
NORTHWEST UTILITIES NOTIFICATION CENTER

DESIGN & ENGINEERING DIVISION

NE 15TH AVENUE
POND NO. 1

WILLIAM BURKE HICKEY
STATE OF WASHINGTON
PROFESSIONAL ENGINEER
EXPIRES: 04/25/07

JACOBS
JACOBS CIVIL INC.
600 108th Avenue NE,
Suite 700
Bellevue, WA 98004
Phone: (425)452–8000
Fax: (425)452–1212

CLARK COUNTY WASHINGTON

P2-03 CONTROL STRUCTURE
SPECIAL CB 72" TYPE 2
STA 57+65.8, 204.7'LT
SEE SHEET 52 FOR
ELEVATIONS

P2-02
STA 57+33.0, 179.0'LT
IE 263.90 OUT(18")
5'X9' ROCK PAD
SEE DEBRIS RACK AND
ROCK PAD DETAIL ON
SHEET 42

40LF 18" STM
@S=0.0025

18" STM 169 LF

6' HIGH CHAIN LINK FENCE

MAINT. ACCESS RD

POOL
266.5

261.5
BOTTOM

268.1 BAFFLE BERM

261.5
BOT.

262.5 FOR SED.
POOL
266.5

33-08

8" DI 41 LF

33-07
OVERFLOW
STRUCTURE
CB 54" TYPE 2
W/ DEBRIS CAGE
SEE SHEET 53

34-07

34-13

33-09

57+00

NE 15TH AVE

MAINT. ACCESS RD

LOW FLOW
SPILLWAY
SEE SHEET 54
FOR DETAILS

MAINTENANCE
ACCESS ROAD
LENGTH = 290'
SEE SHEET 42
FOR TYP. SECTION

1' TYP.

33-10
MAINTENANCE DRAIN STRUCTURE
MH 48" TYPE 3 WITH GATE VALVE
SEE SHEET 52 FOR MORE INFORMATION

INSTALL 20'
CHAIN LINK GATE
PER WSDOT STD
PLAN L-3

INSTALL CHAIN LINK FENCE
SEE CLARK CO. STD PLAN D26

NOTE
1. INSTALL PERMANENT STORM WATER CONTROL POND SIGN AT LOCATION DETERMINED BY ENGINEER. SEE SHEET 53 FOR DETAIL.

POND 2

SCALE IN FEET
10 0 10 20

	NORTH	EAST
POND		
A	156986.4	1089638.2
B	156996.3	1089645.1
C	156984.0	1089672.6
D	156972.9	1089667.6
E	156952.7	1089705.2
F	156969.2	1089712.7
G	156966.5	1089718.7
H	156944.1	1089724.4
FENCELINE		
I	156944.1	1089571.8
J	157013.6	1089576.3
K	157044.4	1089607.3
L	157047.6	1089626.3
M	156976.2	1089777.9
N	156899.2	1089762.6
O	156881.0	1089737.0

P:\W1427900\10900\700CADD\NE15DP201.DWG

DESIGNED TJN
DRAWN TJN
CRP 382822
HOR. 1" = 10'
VERT. N/A
DATE 10/31/2005
DWG: NE15P201
SHEET 48 OF 73

CALL 48 HOURS BEFORE YOU DIG
1-800-553-4344
"It's the Law"
NORTHWEST UTILITIES NOTIFICATION CENTER

DESIGN & ENGINEERING DIVISION

NE 15TH AVENUE
POND NO. 2

WILLIAM BURKE HICKEY
STATE OF WASHINGTON
GEOTECHNICAL ENGINEER
REGISTERED PROFESSIONAL ENGINEER
EXPIRES: 04/25/07

JACOBS
JACOBS CIVIL INC.
600 108th Avenue NE,
Suite 700
Bellevue, WA 98004
Phone: (425)452-8000
Fax: (425)452-1212

CLARK COUNTY WASHINGTON

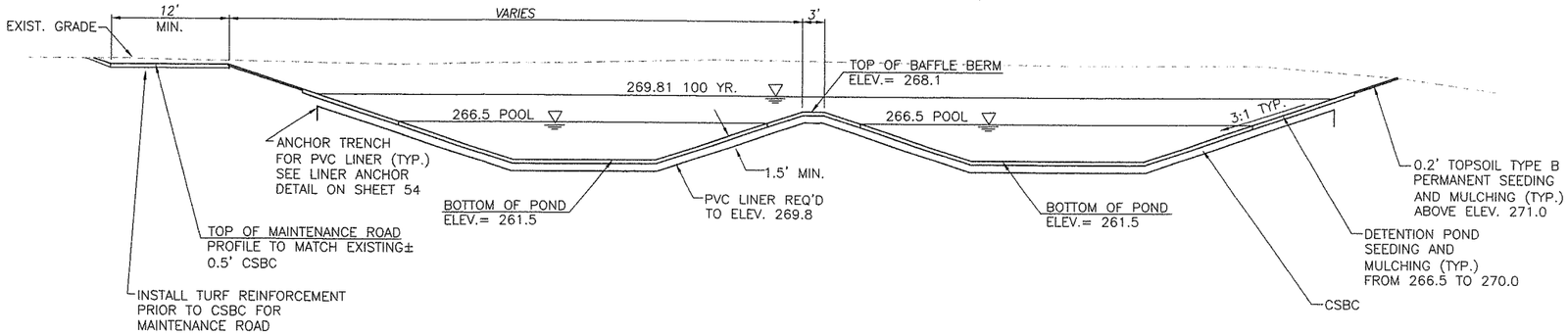

LONGITUDINAL SECTION A–A

NTS

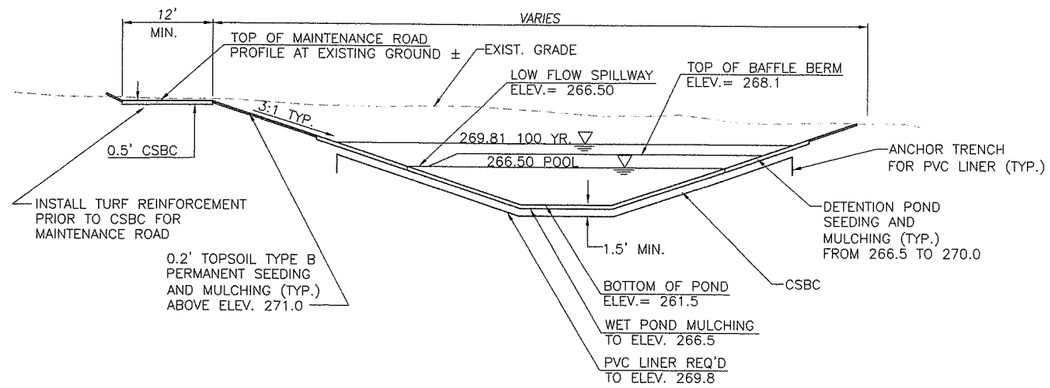

NOTE
THE COST FOR THE PVC POND LINER AND TOPSOIL SHALL BE INCIDENTAL TO "STORMWATER FACILITY EXCAVATION INCL. HAUL".

CROSS SECTION B–B

NTS

POND 2

DESIGNED TJN
DRAWN DMO
CRP 382822
HOR. 1" = 10'
VERT. N/A
DATE 10/31/2005
DWG. NE15P202
SHEET 49 OF 73

CALL 48 HOURS BEFORE YOU DIG
1-800-553-4344
"It's the Law"
NORTHWEST UTILITIES NOTIFICATION CENTER

DESIGN & ENGINEERING DIVISION

NE 15TH AVENUE
POND NO. 2

WILLIAM BURKE HACKER
STATE OF WASHINGTON
EXPIRES: 04/25/07

JACOBS

JACOBS CIVIL INC.
600 108th Avenue NE,
Suite 700
Bellevue, WA 98004
Phone: (425)452-8000
Fax: (425)452-1212

CLARK COUNTY WASHINGTON

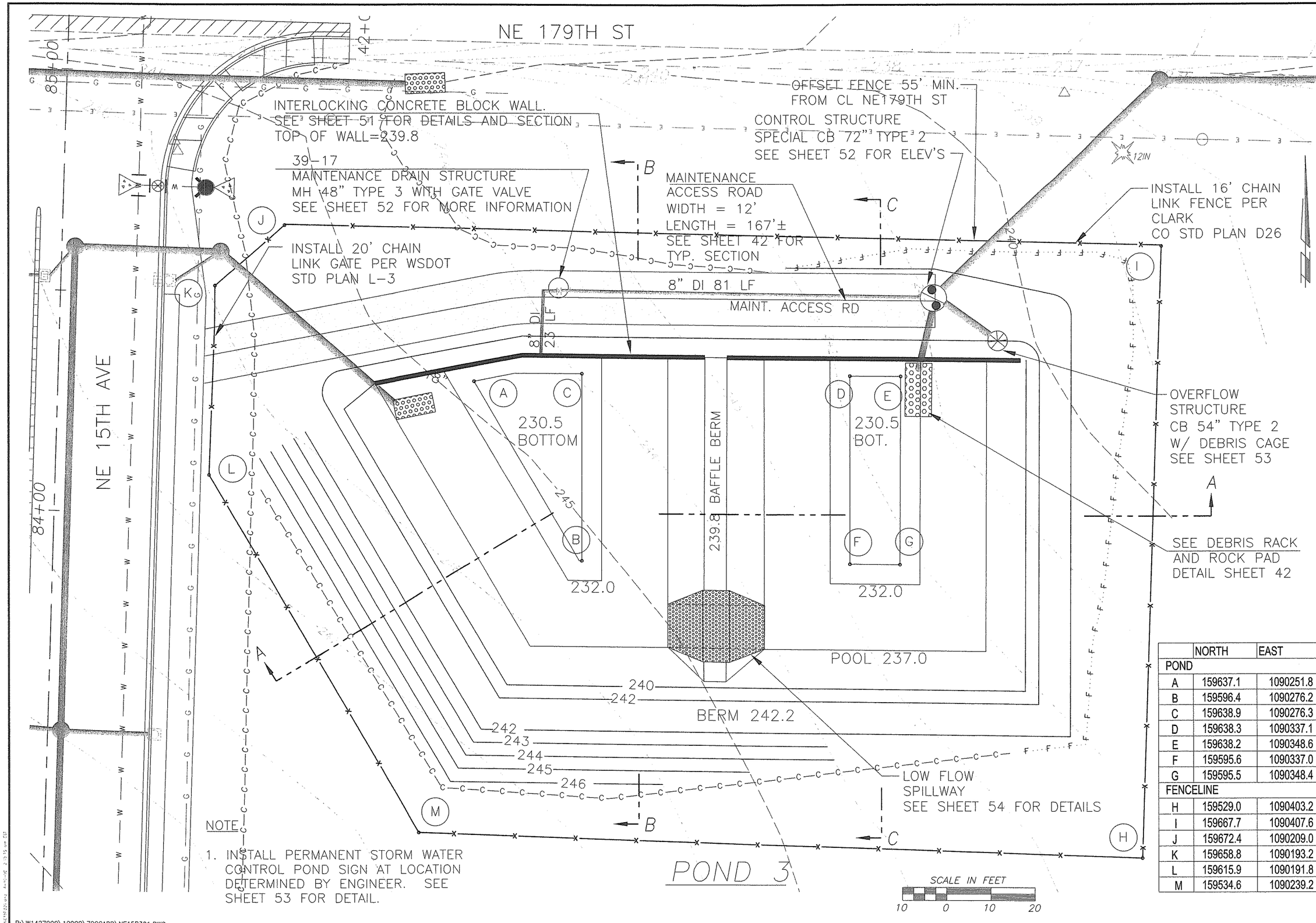

NOTE

1. INSTALL PERMANENT STORM WATER CONTROL POND SIGN AT LOCATION DETERMINED BY ENGINEER. SEE SHEET 53 FOR DETAIL.

	NORTH	EAST
POND		
A	159637.1	1090251.8
B	159596.4	1090276.2
C	159638.9	1090276.3
D	159638.3	1090337.1
E	159638.2	1090348.6
F	159595.6	1090337.0
G	159595.5	1090348.4
FENCELINE		
H	159529.0	1090403.2
I	159667.7	1090407.6
J	159672.4	1090209.0
K	159658.8	1090193.2
L	159615.9	1090191.8
M	159534.6	1090239.2

DESIGNED TJN
DRAWN TJN
CRP 382822
HOR. 1" = 10'
VERT. N/A
DATE 10/31/2005
DWG: NE15P301
SHEET 50 OF 73

CALL 48 HOURS BEFORE YOU DIG
1-800-553-4344
"It's the Law"
NORTHWEST UTILITIES NOTIFICATION CENTER

DESIGN & ENGINEERING DIVISION

NE 15TH AVENUE
POND NO. 3

BURKE HICKEY
STATE OF WASHINGTON
REGISTERED PROFESSIONAL ENGINEER
EXPIRES: 04/25/07

JACOBS
JACOBS CIVIL INC.
600 108th Avenue NE,
Suite 700
Bellevue, WA 98004
Phone: (425)452-8000
Fax: (425)452-1212

CLARK COUNTY WASHINGTON

P:\W1427900\10900\700CADD\NE15P301.DWG

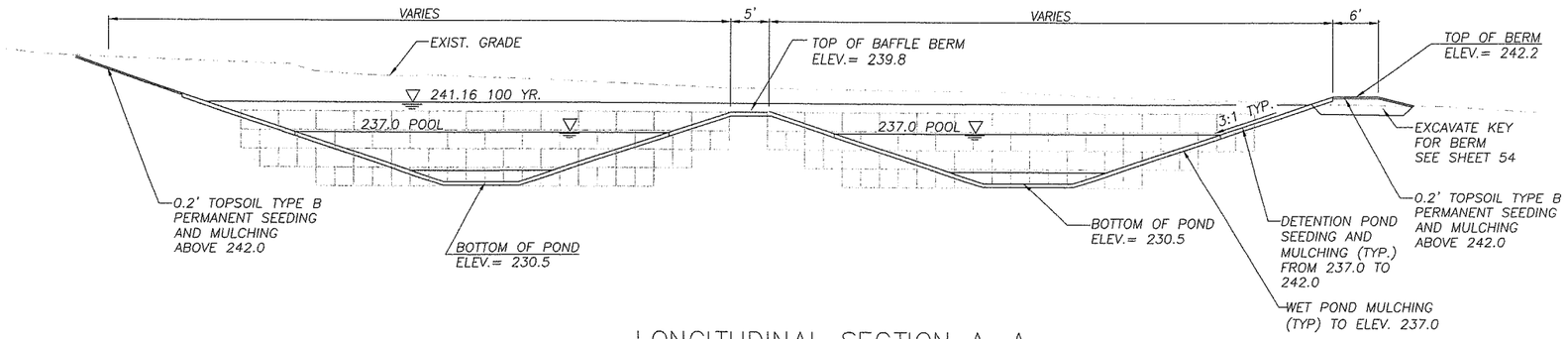

LONGITUDINAL SECTION A–A
NTS

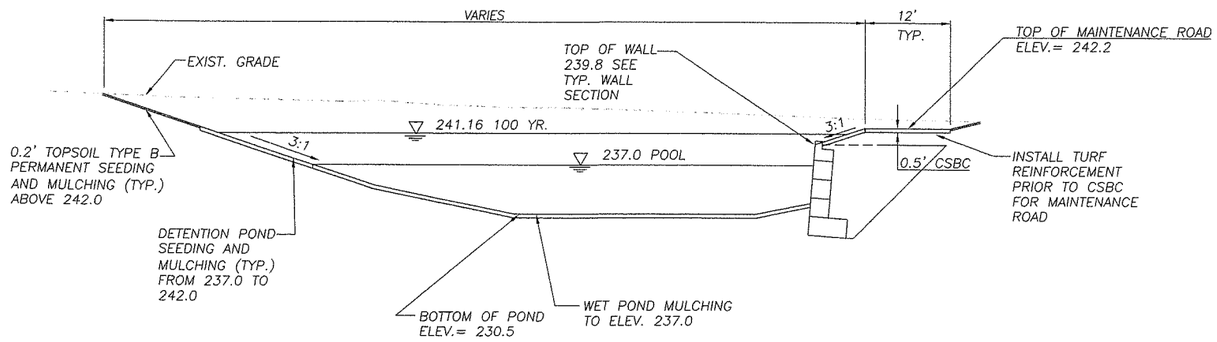

CROSS SECTION B–B

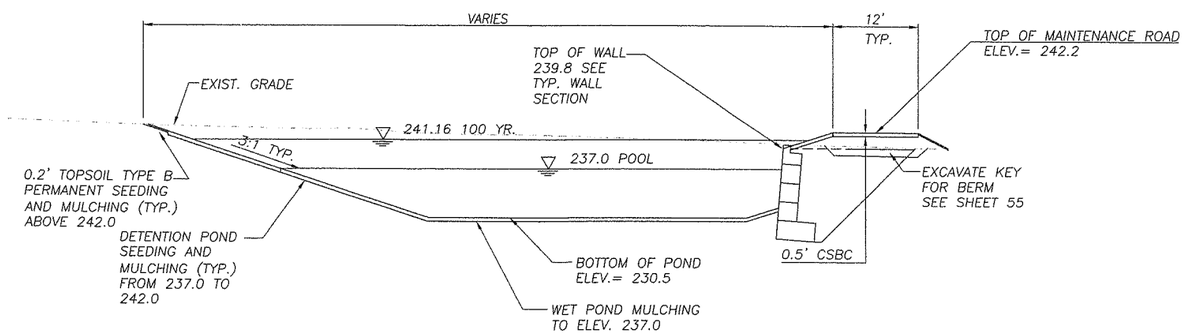

CROSS SECTION C–C
NTS

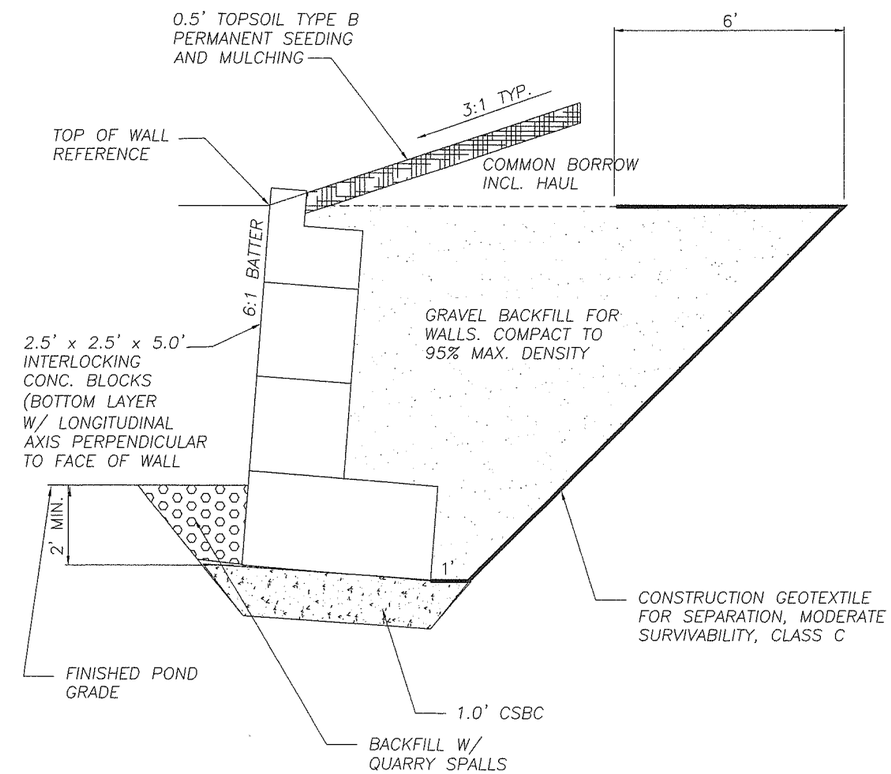

TYP. WALL SECTION
NTS

DESIGNED TJN
DRAWN DMO
CRP 382822
HOR. NONE
VERT. NONE
DATE 10/31/2005
DWG: NE15P302
SHEET 51 OF 73

CALL 48 HOURS BEFORE YOU DIG
1-800-553-4344
"It's the Law"
NORTHWEST UTILITIES NOTIFICATION CENTER

DESIGN & ENGINEERING DIVISION

NE 15TH AVENUE
POND NO. 3

BURKE HICKEY
STATE OF WASHINGTON
WILLIAM
PROFESSIONAL ENGINEER
EXPIRES 04/25/07

JACOBS
JACOBS CIVIL INC.
600 108th Avenue NE,
Suite 700
Bellevue, WA 98004
Phone: (425)452-8000
Fax: (425)452-1212

CLARK COUNTY WASHINGTON

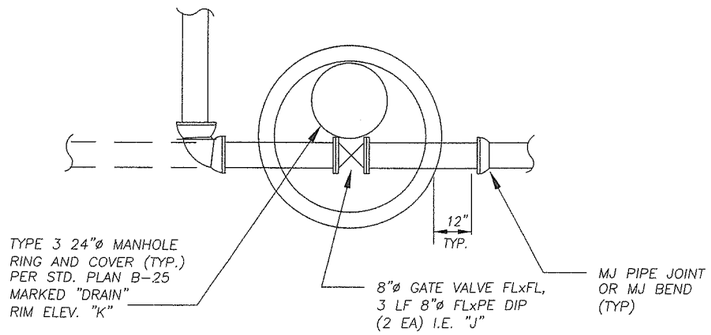

MAINT. DRAIN STRUCTURE
MANHOLE, TYPE 3
W/ GATE VALVE

I.D.	CONTROL STRUCTURE TABLE	POND 1	POND 2	POND 3
A	INVERT ELEV. – IN (FT)	223.51	262.90	232.00
B	INVERT ELEV. – OUT (FT)	223.51	262.90	232.00
C	RESTRICTOR 1 INVERT ELEV. (FT)	226.65	265.50	237.00
D	RESTRICTOR 1 BOTTOM PLATE ORIFICE DIAM. (INCH)	1.502	1.713	3.492
E	RESTRICTOR 2 INVERT ELEV. (FT.)	228.58	268.80	239.30
F	RESTRICTOR 2 BOTTOM PLATE ORIFICE DIAM. (INCH)	2.423	2.306	3.518
G	TOP WEIR PLATE ELEV. (FT.)	229.04	269.51	240.46
H	NOTCH WIDTH (INCH)	11.25	8.00	8.86
I	TOP OF WALL ELEV. (FT.)	229.25	269.81	241.20
I.D.	MAINT. DRAIN STRUCTURE	POND 1	POND 2	POND 3
J	INVERT ELEV. VALVE (FT)	223.51	262.90	232.30
K	RIM ELEV. (FT)	230.70	273.50	242.20

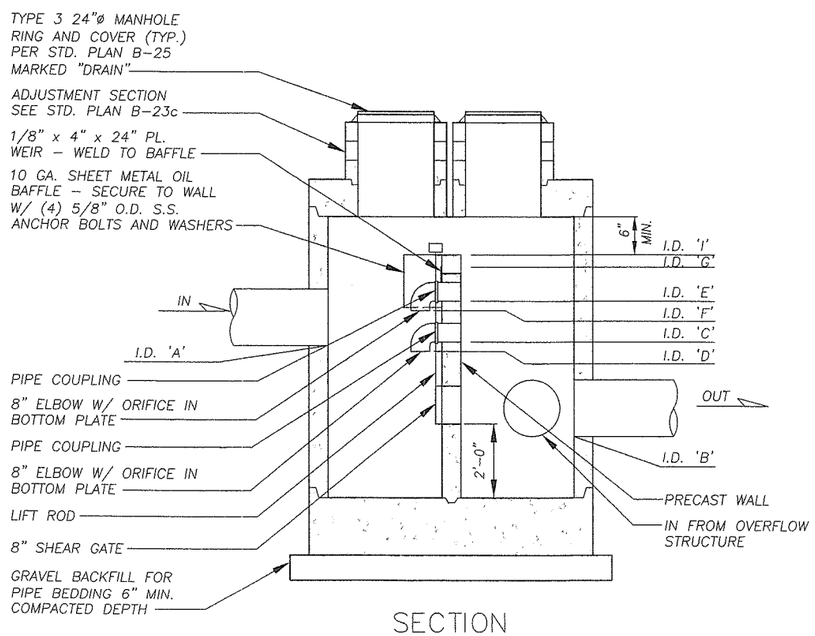

SECTION

CONTROL STRUCTURE
SPECIAL CATCH BASIN, TYPE 2
72" DIA.
NTS

SPECIAL CATCH BASIN NOTES:

1. FRAME AND LADDER OR STEPS OFFSET SO:
   A. CLEANOUT GATE IS VISIBLE FROM TOP.
   B. CLIMB DOWN SPACE IS CLEAR OF RISER AND CLEANOUT GATE.
2. 8" DIAMETER SHEAR GATE WITH CONTROL ROD FOR CLEANOUT/DRAIN (ROD BENT AS REQUIRED FOR VERTICAL ALIGNMENT WITH COVER) PER CLARK CO STD. PLAN D8.1 AND D8.2.
3. ATTACH SHEAR GATE CONTROL ROD TO SUPPORT BRACKET ON INSIDE OF ACCESS OPENING.
4. FOR DETAILS SHOWING LADDER, STEPS, HANDHOLDS AND TOP SLAB, SEE CLARK CO STD. PLAN D1.5.
5. ALL STEEL PARTS TO BE GALVANIZED AND TREATMENT 1 COATED, UNLESS STAINLESS STEEL.
6. FOR RISERS, PROVIDE AT LEAST TWO 3" x 0.090" SUPPORT BRACKETS ANCHORED TO CONCRETE (MAX. 3'-0" SPACING) WITH 5/8" ø STAINLESS STEEL EXPANSION BOLTS AND WASHERS.
7. FOR OTHER DETAILS SEE CLARK CO STD. PLAN D8.1.

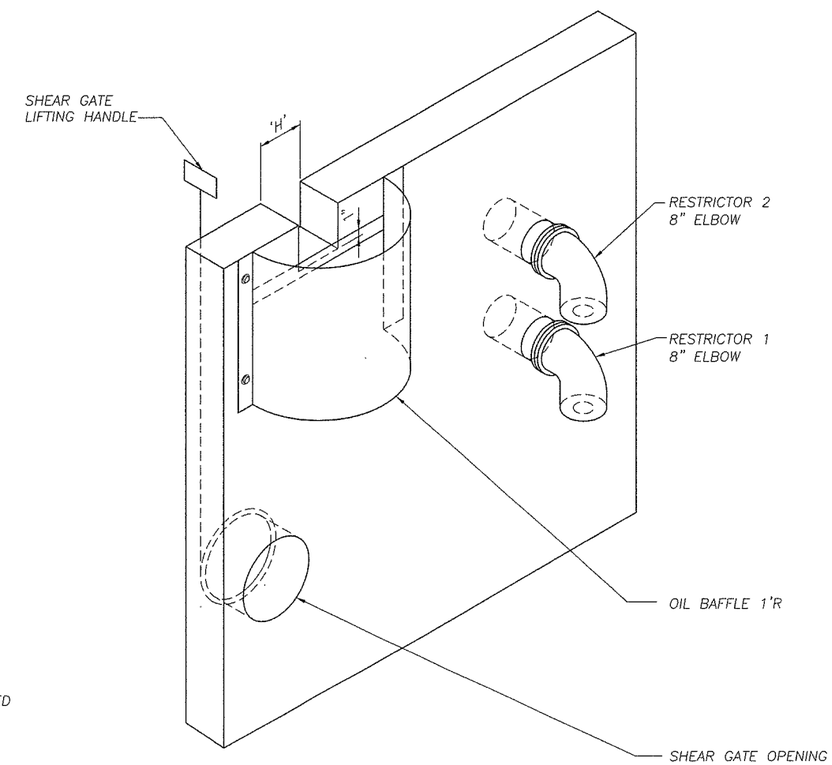

BAFFLE WALL DETAIL
NTS

P:\W1427900\10900\700CADD\NE15PG01.DWG

DESIGNED TJN
DRAWN DMO
CRP 382822
HOR. NONE
VERT. NONE
DATE 10/31/2005
DWG: NE15PG01
SHEET 52 OF 73

CALL 48 HOURS BEFORE YOU DIG
1-800-553-4344
"It's the Law"
NORTHWEST UTILITIES NOTIFICATION CENTER

DESIGN & ENGINEERING DIVISION

NE 15TH AVENUE
STORMWATER FACILITIES DETAILS

BURKE HICKEY
STATE OF WASHINGTON
WILLIAM
REGISTERED PROFESSIONAL ENGINEER
EXPIRES: 04/25/07

JACOBS
JACOBS CIVIL INC.
600 108th Avenue NE,
Suite 700
Bellevue, WA 98004
Phone: (425)452-8000
Fax: (425)452-1212

CLARK COUNTY WASHINGTON

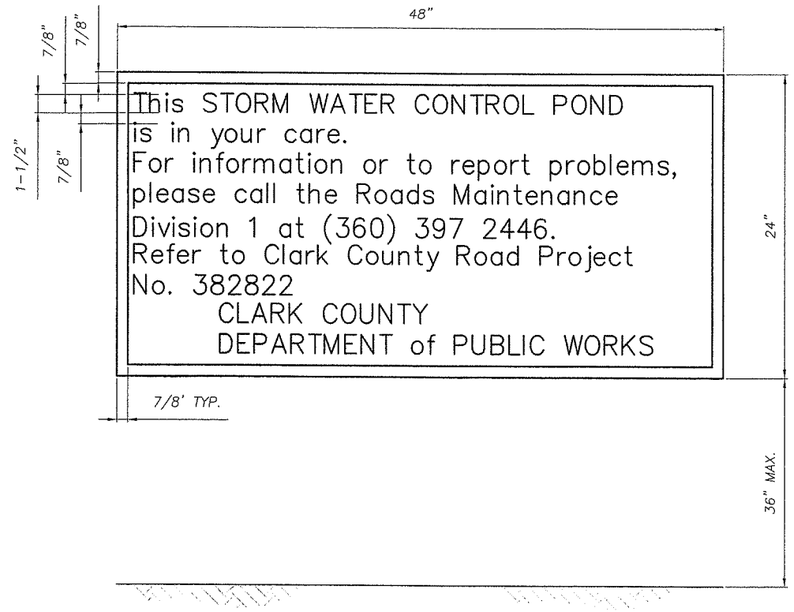

PERMANENT STORM WATER CONTROL POND SIGN

NTS

SIGN NOTES:

MATERIAL:	GRADE "B" OR BETTER EXTERIOR PLYWOOD
PAINT:	FACE–3 COATS OUTDOOR ENAMEL (SPRAYED). BACK–1 COAT OUTDOOR ENAMEL (SPRAYED).
LETTERING:	SILKSCREEN ENAMEL WHERE POSSIBLE, OR HAND PAINTED ENAMEL.
COLORS:	BLACK AND WHITE, WHITE BACKGROUND, LETTERING AND BORDER IN BLACK.
TYPE FACE:	HELVECTIA, 1–1/2" TALL WITH 7/8" SPACING BETWEEN LETTERS AND OUTER BORDER. OUTER BORDER 1/4" WIDE.
INSTALLATION:	SECURE TO CHAIN LINK GATE, AS APPROVED BY THE ENGINEER

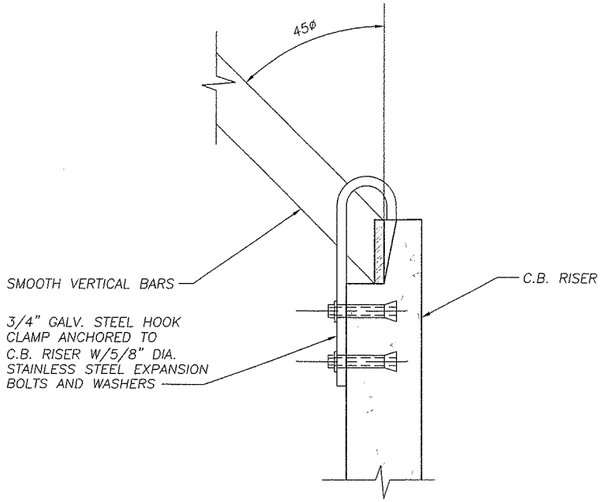

DETAIL 1/—

NTS

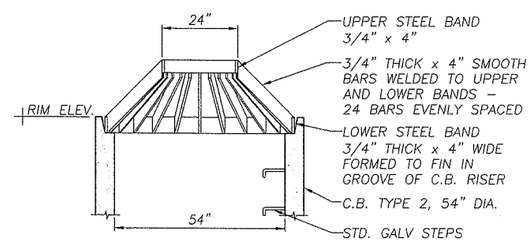

SECTION C–C

NTS

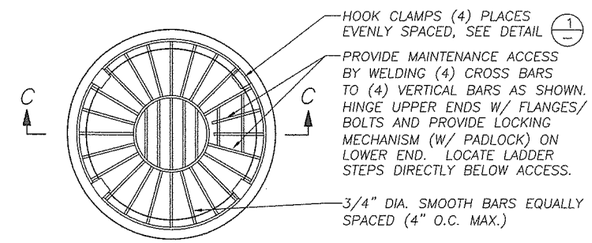

DEBRIS CAGE PLAN

NTS

OVERFLOW STRUCTURE
SPECIAL 54" CB TYPE 2 W/ DEBRIS CAGE

P:\W1427900\10900\700CADD\NE15PG02.DWG

DESIGNED	TJN
DRAWN	DMO
CRP	382822
HOR.	NONE
VERT.	NONE
DATE	10/31/2005
DWG:	NE15PG02
SHEET	53 OF 73

CALL 48 HOURS BEFORE YOU DIG 1-800-553-4344 "It's the Law" NORTHWEST UTILITIES NOTIFICATION CENTER

DESIGN & ENGINEERING DIVISION

NE 15TH AVENUE
STORMWATER FACILITIES DETAILS

WILLIAM BURKE HICKEY STATE OF WASHINGTON 38575 PROFESSIONAL ENGINEER REGISTERED
EXPIRES: 04/25/07

JACOBS

JACOBS CIVIL INC.
600 108th Avenue NE,
Suite 700
Bellevue, WA 98004
Phone: (425)452-8000
Fax: (425)452-1212

CLARK COUNTY WASHINGTON

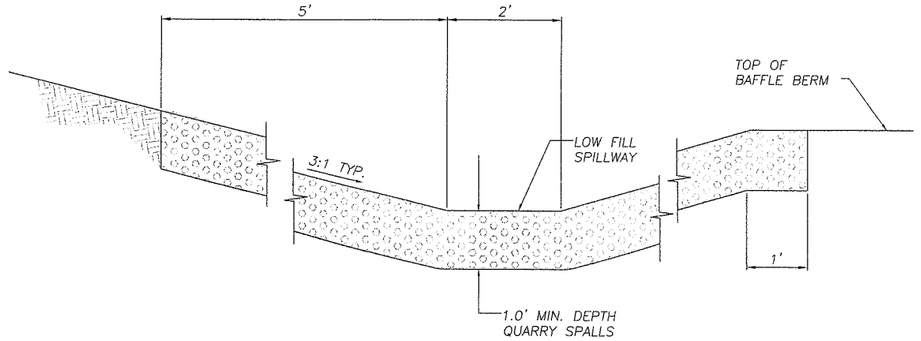

LOW FLOW
SPILLWAY SECTION A–A
NTS

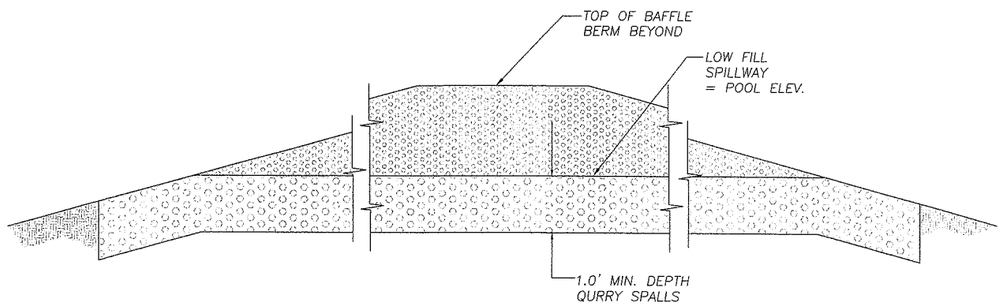

LOW FLOW
SPILLWAY SECTION B–B
NTS

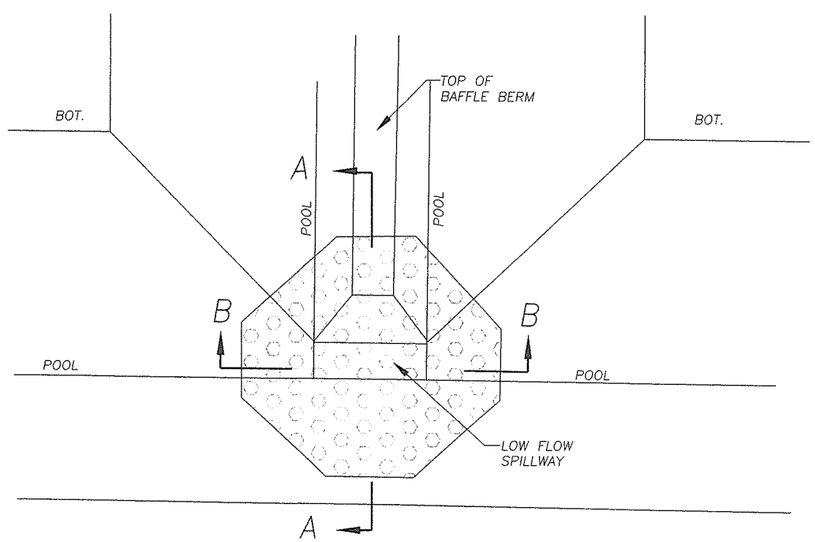

TYPICAL LOW FLOW
SPILLWAY PLAN
NTS

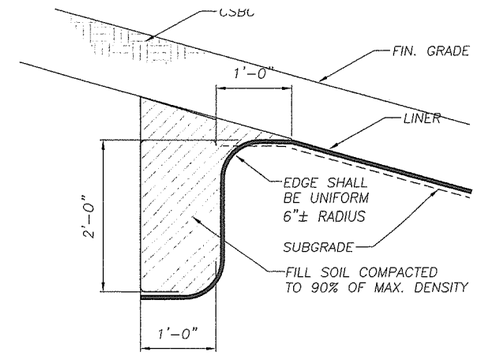

LINER ANCHOR
TRENCH DETAIL, TYPICAL
NTS

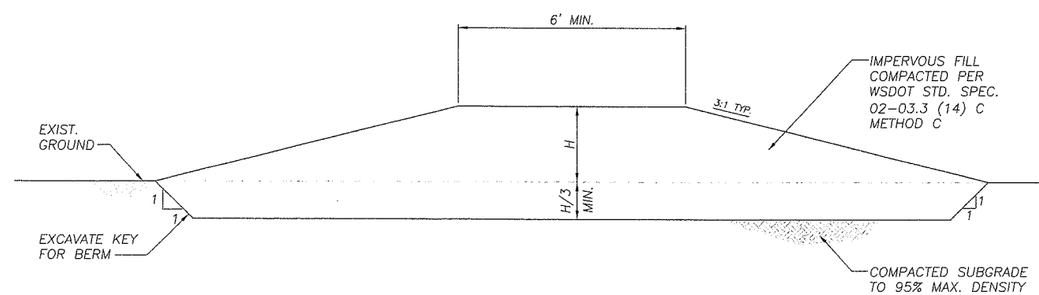

POND BERM
TYPICAL SECTION
NTS

P:\W1427900\10900\700CADD\NE15PG03.DWG

DESIGNED TJN
DRAWN DMO
CRP 382822
HOR. NONE
VERT. NONE
DATE 10/31/2005
DWG: NE15PG03
SHEET 54 OF 73

CALL 48 HOURS BEFORE YOU DIG
1–800–553–4344
"It's the Law"
NORTHWEST UTILITIES NOTIFICATION CENTER

DESIGN & ENGINEERING DIVISION

NE 15TH AVENUE
STORMWATER FACILITIES DETAILS

WILLIAM BURKE HICKEY
STATE OF WASHINGTON
PROFESSIONAL ENGINEER
EXPIRES: 04/25/07

JACOBS
JACOBS CIVIL INC.
600 108th Avenue NE,
Suite 700
Bellevue, WA 98004
Phone: (425)452–8000
Fax: (425)452–1212

CLARK COUNTY WASHINGTON

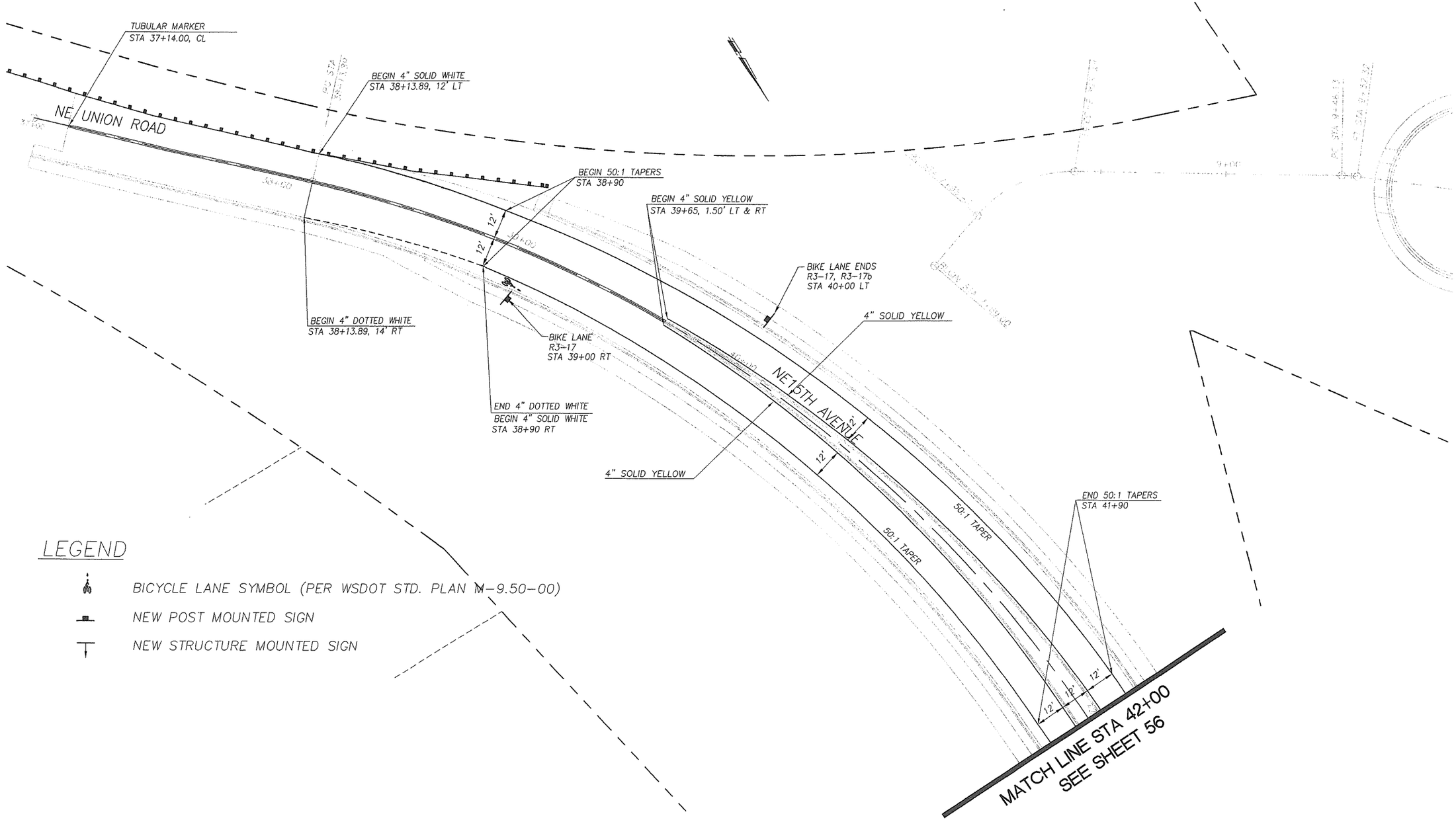

LEGEND

- BICYCLE LANE SYMBOL (PER WSDOT STD. PLAN M-9.50-00)
- NEW POST MOUNTED SIGN
- NEW STRUCTURE MOUNTED SIGN

NOT IN CONTRACT
WORK BY OTHERS
UNLESS NOTED OTHERWISE

DESIGNED HAW
DRAWN HAW
CRP 382822
HOR. 1"=20'
VERT. N/A
DATE 07/11/2005
DWG: NE15SS01
SHEET 55 OF 73

CALL 48 HOURS BEFORE YOU DIG
1-800-553-4344
"It's the Law"
NORTHWEST UTILITIES NOTIFICATION CENTER

DESIGN & ENGINEERING DIVISION

NE 15TH AVENUE
SIGNING & STRIPING PLAN

HEATHER A. HEEKA'S
STATE OF WASHINGTON
PROFESSIONAL ENGINEER
REGISTERED
EXPIRES: 11/08/06

JACOBS

JACOBS CIVIL INC.
600 108th Avenue NE,
Suite 700
Bellevue, WA 98004
Phone: (425)452-8000
Fax: (425)452-1212

CLARK COUNTY WASHINGTON

NOT IN CONTRACT
WORK BY OTHERS
UNLESS NOTED OTHERWISE

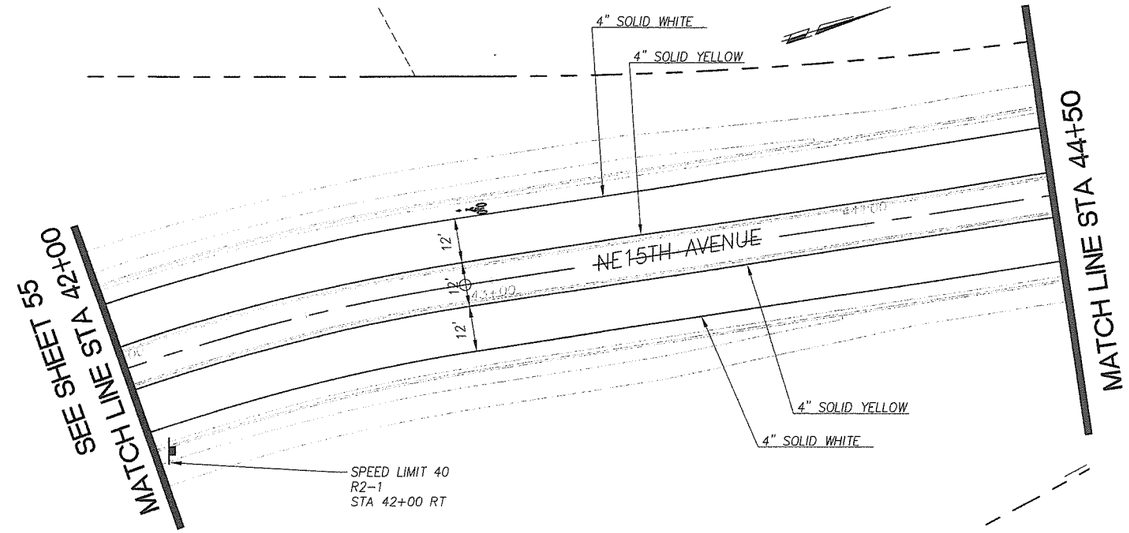

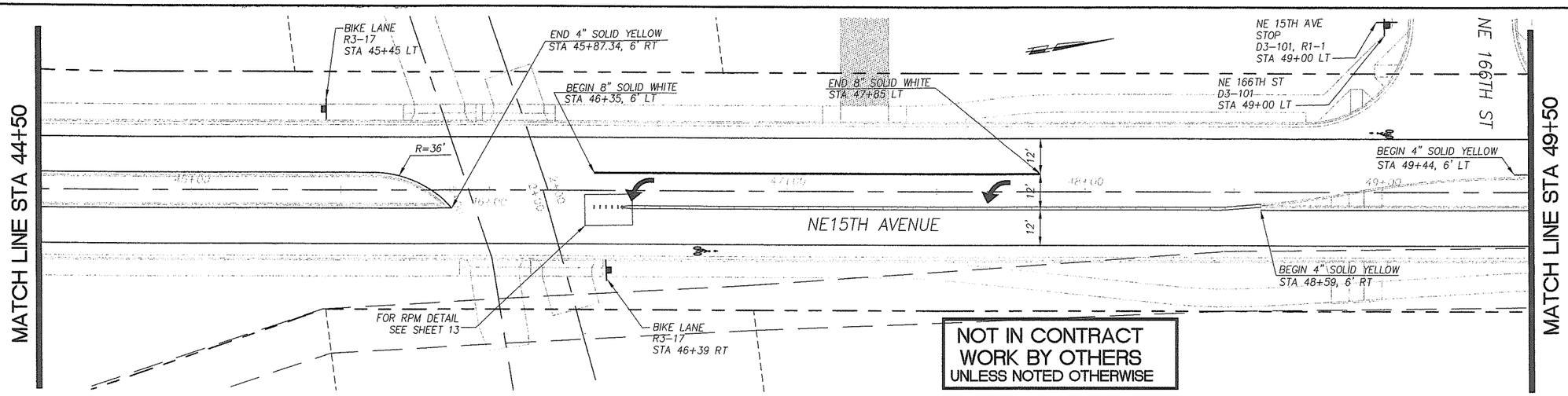

NOT IN CONTRACT
WORK BY OTHERS
UNLESS NOTED OTHERWISE

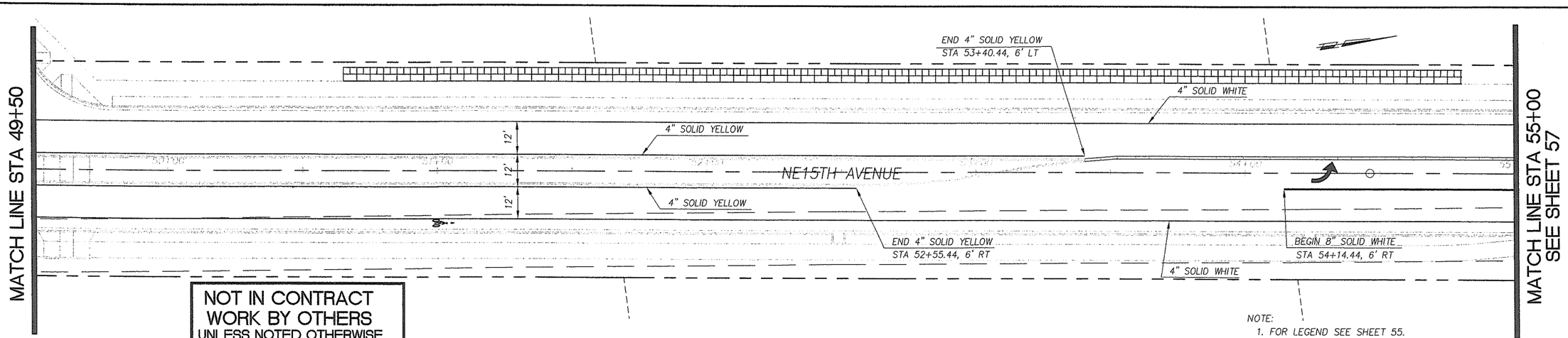

NOT IN CONTRACT
WORK BY OTHERS
UNLESS NOTED OTHERWISE

NOTE:
1. FOR LEGEND SEE SHEET 55.
2. SEE SHEET 59 FOR SIGN DETAILS.

DESIGNED	HAW
DRAWN	HAW
CRP	382822
HOR.	1"=20'
VERT.	N/A
DATE	07/11/2005
DWG:	NE15SS02
SHEET	56 OF 73

CALL 48 HOURS BEFORE YOU DIG
1-800-553-4344
"It's the Law"
NORTHWEST UTILITIES NOTIFICATION CENTER

DESIGN & ENGINEERING DIVISION

NE 15TH AVENUE
SIGNING & STRIPING PLAN

HEATHER A. REEKS
STATE OF WASHINGTON
PROFESSIONAL ENGINEER
EXPIRES: 11/08/06

JACOBS
JACOBS CIVIL INC.
600 108th Avenue NE,
Suite 700
Bellevue, WA 98004
Phone: (425)452-8000
Fax: (425)452-1212

CLARK COUNTY WASHINGTON

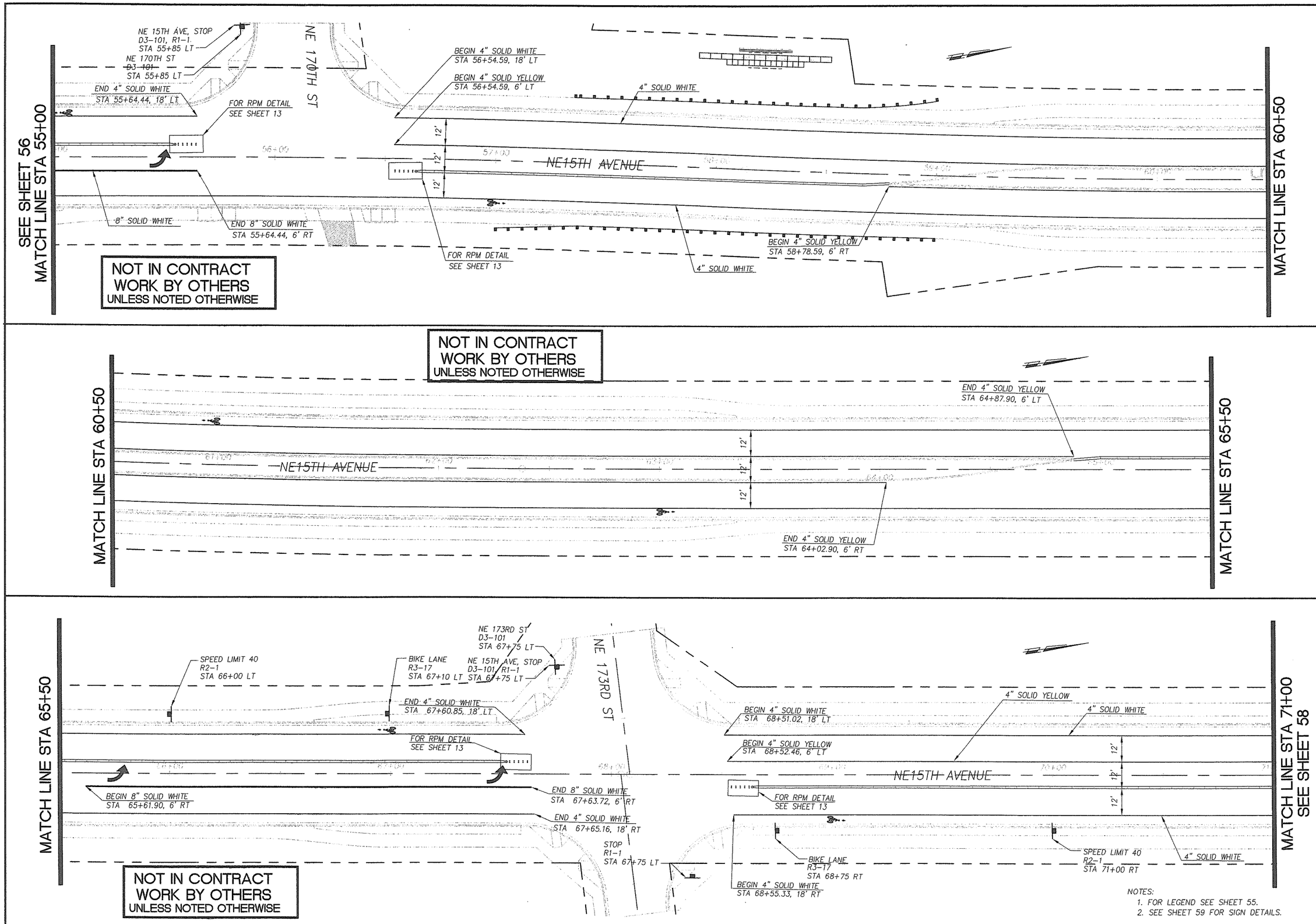

NOTES:
1. FOR LEGEND SEE SHEET 55.
2. SEE SHEET 59 FOR SIGN DETAILS.

DESIGNED	HAW
DRAWN	HAW
CRP	382822
HOR.	1"=20'
VERT.	N/A
DATE	07/11/2005
DWG:	NE15SS03
SHEET 57	OF 73

CALL 48 HOURS BEFORE YOU DIG 1-800-553-4344 "It's the Law" NORTHWEST UTILITIES NOTIFICATION CENTER

DESIGN & ENGINEERING DIVISION

NE 15TH AVENUE
SIGNING & STRIPING PLAN

HEATHER A. HEEKA-O'BRIEN STATE OF WASHINGTON REGISTERED PROFESSIONAL ENGINEER
EXPIRES: 11/09/06

JACOBS

JACOBS CIVIL INC.
600 108th Avenue NE,
Suite 700
Bellevue, WA 98004
Phone: (425)452-8000
Fax: (425)452-1212

CLARK COUNTY WASHINGTON

NOT IN CONTRACT
WORK BY OTHERS
UNLESS NOTED OTHERWISE

SEE SHEET 57
MATCH LINE STA 71+00

4" SOLID YELLOW
4" SOLID WHITE
END 4" SOLID YELLOW
STA 73+91, 6' LT
12'
BEGIN 4" SOLID YELLOW
STA 71+28.28, 6'RT
4" SOLID YELLOW
4" SOLID WHITE

MATCH LINE STA 76+50

NOT IN CONTRACT
WORK BY OTHERS
UNLESS NOTED OTHERWISE

MATCH LINE STA 76+50

BEGIN 4" SOLID YELLOW
STA 76+65.17, 6' LT
4" SOLID WHITE
12'
BEGIN 4" SOLID YELLOW
STA 79+99, 6' RT
END 4" SOLID YELLOW
STA 80+69.57, 6' RT
ONLY
ONLY
R3-8
STA 80+00 RT
4" SOLID WHITE
END 4" SOLID YELLOW
STA 77+24.84, 6' RT
SIGNAL AHEAD
W3-3
STA 78+00 RT

MATCH LINE STA 81+50

MATCH LINE STA 81+50

SIGNAL AHEAD
W3-3
300' W OF STOP LINE
BIKE LANE
R3-17
STA 83+85 LT
SPEED LIMIT 40
R2-1
STA 82+50 LT
8' CROSSWALK
SEE NOTE 2
END 4" SOLID WHITE
STA 84+78.57, 33.7' LT
END 4" SOLID YELLOW
STA 81+54.57, 6' LT
STOP LINE
12"x27' SOLID WHITE
STA 84+78.57, 6' LT
4" SOLID WHITE
STA 83+80, 18' LT
22'
12'
BEGIN 8" SOLID WHITE
STA 82+28.57, 6' RT
8" SOLID WHITE
23'
END 8" SOLID WHITE
STA 84+78.57, 6' RT
RIGHT LANE MUST TURN RIGHT
R3-7R
STA 82+00 RT
4" SOLID WHITE
END 4" SOLID WHITE
STA 84+78.57, 18' RT
4' TYP
NE 15TH AVE
D3-301
SEE NOTE 4
RIGHT LANE MUST TURN RIGHT
BIKE LANE ENDS
R3-7R, R3-17, R3-17b
STA 84+00 RT
STOP LINE - 12"x11' SOLID WHITE
DOUBLE 4" SOLID YELLOW (SEE NOTE 3)
STA 85+21, 55.5' RT
NE 179TH STREET
STOP LINE - 12"x11' SOLID WHITE
DOUBLE 4" YELLOW SOLID (SEE NOTE 3)
STA 85+21, 55' LT
NE 15TH AVE
D3-301
SEE NOTE 4
DOUBLE HEAD ARROW
W1-7
NE 179TH ST
D3-301
SEE NOTE 4
8' CROSSWALK
SEE NOTE 2
SIGNAL AHEAD
W3-3
300' E OF STOP LINE

NOT IN CONTRACT
WORK BY OTHERS
UNLESS NOTED OTHERWISE

NOTES:

1. FOR LEGEND SEE SHEET 55.
2. SEE WSDOT STD. PLAN NO. M-15.10-00 FOR CROSSWALK DETAILS.
3. CONTINUE DOUBLE 4" SOLID YELLOW LINE 100' BEHIND STOP LINE. CONTRACTOR SHALL REMOVE EXISTING CENTER LINE BETWEEN NEW EASTBOUND AND WESTBOUND STOP LINES.
4. SIGN SHALL BE MOUNTED ON SIGNAL MAST ARM PER WSDOT STANDARD PLAN G-9b AND SHALL BE FURNISHED AND INSTALLED BY THE CONTRACTOR.
5. SEE SHEET 59 FOR SIGN DETAILS.

DESIGNED	HAW
DRAWN	HAW
CRP	382822
HOR.	1"=20'
VERT.	N/A
DATE	07/11/2005
DWG:	NE15SS04
SHEET	58 OF 73

CALL 48 HOURS BEFORE YOU DIG
1-800-553-4344
"It's the Law"
NORTHWEST UTILITIES NOTIFICATION CENTER

DESIGN & ENGINEERING DIVISION

NE 15TH AVENUE
SIGNING & STRIPING PLAN

HEATHER A. REEKS
STATE OF WASHINGTON
PROFESSIONAL ENGINEER
EXPIRES: 11/08/06

JACOBS
JACOBS CIVIL INC.
600 108th Avenue NE.
Suite 700
Bellevue, WA 98004
Phone: (425)452-8000
Fax: (425)452-1212

CLARK COUNTY WASHINGTON

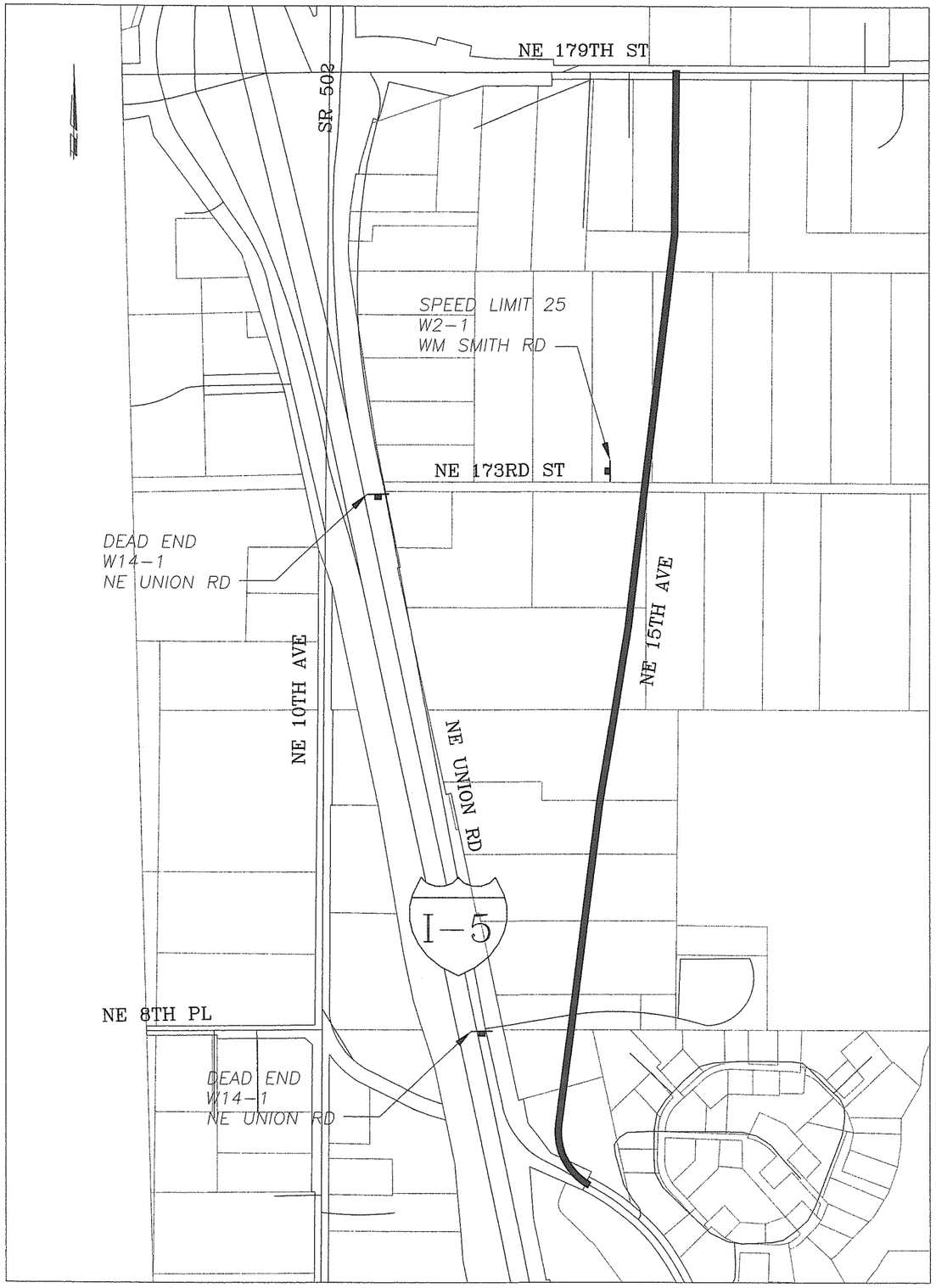

NE 15th Ave 8"/6"

D3-301 MOD.
60" x 18"
BLACK ON YELLOW

NE 179th St 8"/6"

D3-301 MOD.
60" x 18"
BLACK ON YELLOW

NE 15TH AVE

D3-101 MOD.
32" x 6"
BLACK ON YELLOW
DOUBLE FACED

NE 173RD ST

D3-101 MOD.
32" x 6"
BLACK ON YELLOW
DOUBLE FACED

NE 170TH ST

D3-101 MOD.
32" x 6"
BLACK ON YELLOW
DOUBLE FACED

NE 166TH ST

D3-101 MOD.
32" x 6"
BLACK ON YELLOW
DOUBLE FACED

NOT IN CONTRACT
WORK BY OTHERS
UNLESS NOTED OTHERWISE

DESIGNED ETW
DRAWN ETW
CRP 382822
HOR. 1" = 250'
VERT. N/A
DATE 07/11/2005
DWG: NE15SS05
SHEET 59 OF 73

CALL 48 HOURS BEFORE YOU DIG
1-800-553-4344
"It's the Law"
NORTHWEST UTILITIES NOTIFICATION CENTER

DESIGN & ENGINEERING DIVISION

NE 15TH AVENUE
SIGNING & STRIPING PLAN

HEATHER A. REEKS, STATE OF WASHINGTON, REGISTERED PROFESSIONAL ENGINEER
EXPIRES: 11/08/06

JACOBS

JACOBS CIVIL INC.
600 108th Avenue NE,
Suite 700
Bellevue, WA 98004
Phone: (425)452-8000
Fax: (425)452-1212

CLARK COUNTY WASHINGTON

RETURN INFO		ELEV
D1	BCR 56+60.05, 23.00'LT	274.92
D2	△/4	275.03
D3	△/2	275.14
D4	3△/4	275.25
D5	ECR 56+25.42, 56.60'LT	275.36
D6	56+25.33, 60.45'LT	275.39

SPOT ELEVATIONS FOR DRIVEWAY

ID	15TH STATION	OFFSET	ELEV
CL6	56+26.67	23.00' RT	275.87
AP42	56+21.10	29.00' RT	276.15
AP43	56+35.76	29.00' RT	275.71
AP44	56+37.36	40.21' RT	274.26
AP45	56+24.93	40.55' RT	274.23

PAVEMENT SPOT ELEVATIONS

ID	15TH STATION	OFFSET	ELEV
X4	56+08.05	23.00' LT	276.46
X5	56+08.05	45.00' LT	276.01
X6	56+08.05	60.27' LT	275.70

RETURN INFO		ELEV
C1	BCR 55+56.06, 23.00'LT	278.28
C2	△/4	277.75
C3	△/2	277.22
C4	3△/4	276.69
C5	ECR 55+90.71, 58.37'LT	276.16
C6	55+90.69, 60.14'LT	276.09

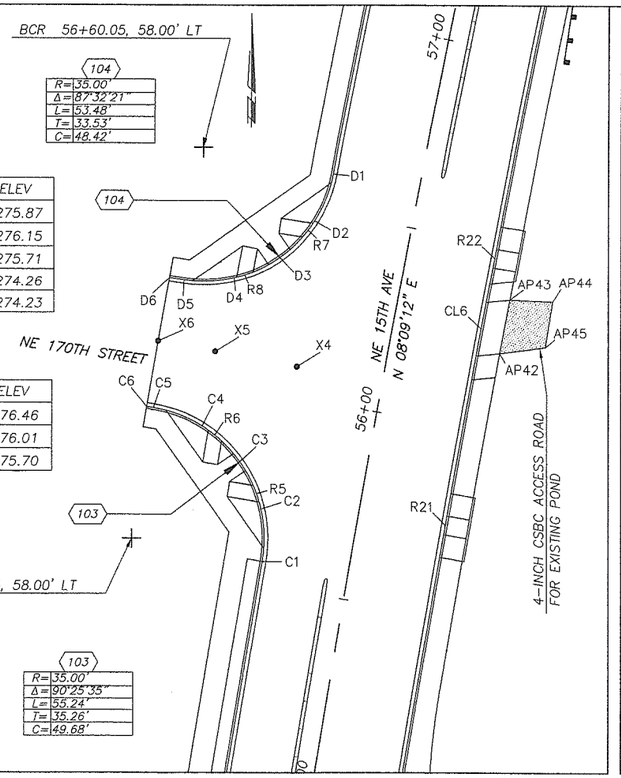

RETURN INFO		ELEV
F1	BCR 68+54.79, 23.00'LT	289.45
F2	△/4	289.25
F3	△/2	289.06
F4	3△/4	288.86
F5	ECR 68+20.04, 53.84'LT	288.66
F6	68+18.53, 66.44'LT	288.41

RETURN INFO		ELEV
G1	BCR 68+60.63, 23.00'RT	289.42
G2	△/4	289.14
G3	△/2	288.85
G4	3△/4	288.57
G5	ECR 68+25.88, 62.16'RT	288.28

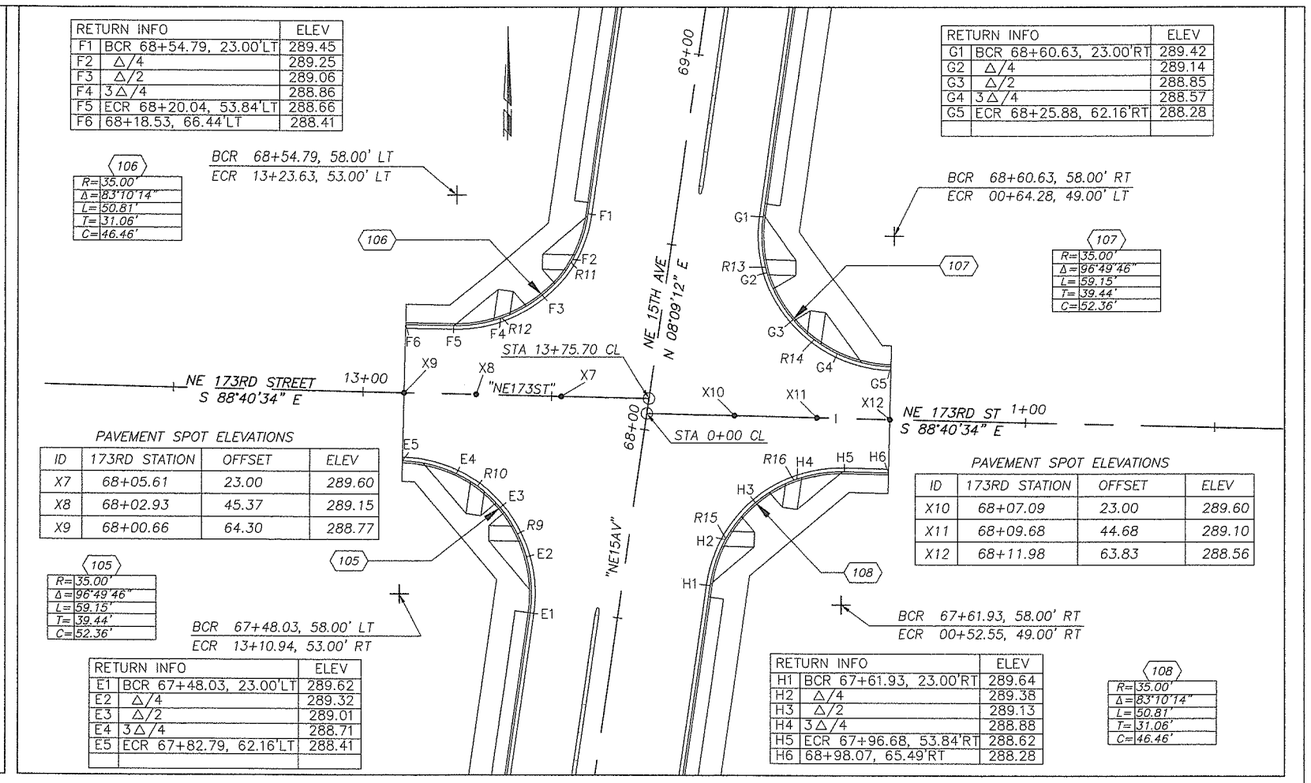

PAVEMENT SPOT ELEVATIONS

ID	173RD STATION	OFFSET	ELEV
X7	68+05.61	23.00	289.60
X8	68+02.93	45.37	289.15
X9	68+00.66	64.30	288.77

105
R=35.00'
Δ=96°49'46"
L=59.15'
T=39.44'
C=52.36'

RETURN INFO		ELEV
E1	BCR 67+48.03, 23.00'LT	289.62
E2	△/4	289.32
E3	△/2	289.01
E4	3△/4	288.71
E5	ECR 67+82.79, 62.16'LT	288.41

PAVEMENT SPOT ELEVATIONS

ID	173RD STATION	OFFSET	ELEV
X10	68+07.09	23.00	289.60
X11	68+09.68	44.68	289.10
X12	68+11.98	63.83	288.56

RETURN INFO		ELEV
H1	BCR 67+61.93, 23.00'RT	289.64
H2	△/4	289.38
H3	△/2	289.13
H4	3△/4	288.88
H5	ECR 67+96.68, 53.84'RT	288.62
H6	68+98.07, 65.49'RT	288.28

108
R=35.00'
Δ=83°10'14"
L=50.81'
T=31.06'
C=46.46'

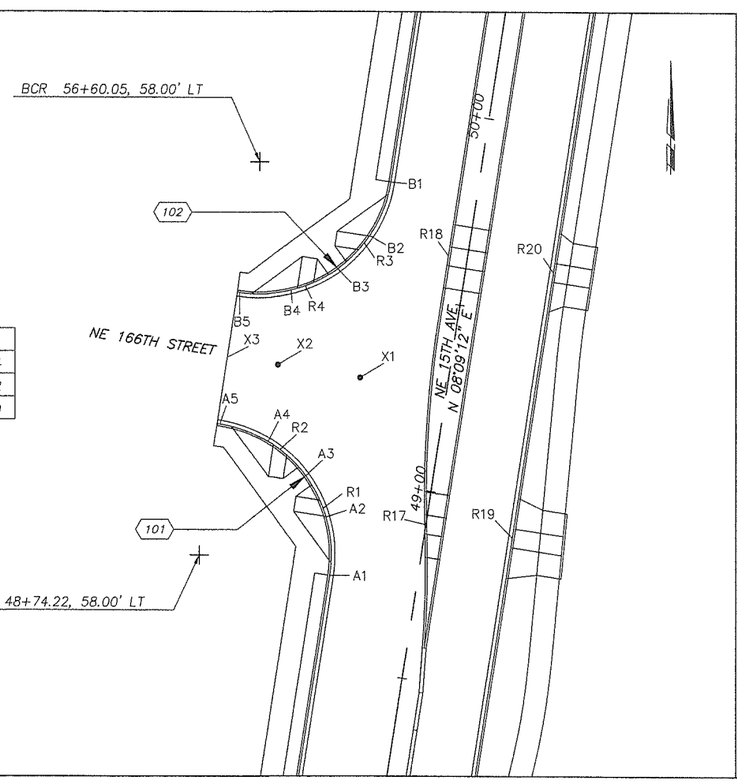

RETURN INFO		ELEV
B1	BCR 49+79.42, 23.00'LT	277.95
B2	△/4	277.18
B3	△/2	276.40
B4	3△/4	275.63
B5	ECR 49+44.42, 58.00'LT	274.86

PAVEMENT SPOT ELEVATIONS

ID	15TH STATION	OFFSET	ELEV
X1	49+26.82	23.00' LT	275.94
X2	49+26.82	45.00' LT	275.42
X3	49+26.82	58.61' LT	275.09

RETURN INFO		ELEV
A1	BCR 48+74.22, 23.00'LT	273.74
A2	△/4	274.01
A3	△/2	274.28
A4	3△/4	274.55
A5	ECR 49+09.22, 58.14'LT	274.82

CL OF RAMPS @ FACE OF CURB
SEE NOTE 2

ID	15TH STATION	OFFSET
R1	48+91.22	27.41' LT
R2	49+04.81	41.00' LT
R3	49+62.42	27.41' LT
R4	49+48.82	41.00' LT
R5	55+73.20	27.56' LT
R6	55+86.43	41.08' LT
R7	56+44.36	26.77' LT
R8	56+29.66	41.09' LT
R9	67+68.06	29.29' LT
R10	67+78.92	41.53' LT
R11	68+41.55	25.60' LT
R12	68+23.91	41.53' LT
R13	68+47.67	25.49' RT
R14	68+30.03	41.00' RT
R15	67+74.60	25.38' RT
R16	67+92.52	41.00' RT

NOTES:

1) ALL OFFSETS & ELEVATIONS ARE TO BOTTOM FACE OF CURB.

2) RAMPS R1 THROUGH R16 ARE TYPE 2 RAMPS PER CLARK CO STD PLAN F2, WITH RAMP TEXTURE AND TRUNCATED DOME DETECTABLE WARNING PATTERN PER CLARK CO STD PLANS F11 & F10.

3) RAMPS R17, R18, R21, AND R22 ARE TYPE 3 RAMPS PER CLARK CO STD PLAN F3, WITH RAMP TEXTURE AND TRUNCATED DOME DETECTABLE WARNING PATTERN PER CLARK CO STD PLANS F11 & F10.

4) RAMPS R19 AND R20 ARE TYPE 4 RAMPS PER CLARK CO STD PLAN F4, WITH RAMP TEXTURE AND TRUNCATED DOME DETECTABLE WARNING PATTERN PER CLARK CO STD PLANS F11 & F10.

5) DRIVEWAY CL6, FOR POND ACCESS ROAD, IS TYPE 3 CEMENT CONCRETE APPROACH PER CLARK CO STD PLAN F16.

6) ADJUSTMENTS TO ELEVATIONS MAY BE NECESSARY AT LOCATIONS THAT MUST MATCH TO EXISTING.

CL OF RAMPS @ FACE OF CURB
SEE NOTES 3 AND 4

ID	15TH STATION	OFFSET
R17	48+91.22	0.31' LT
R18	49+62.42	5.00' LT
R19	48+91.22	23.00' RT
R20	49+62.42	23.00' RT
R21	55+73.72	23.00' RT
R22	56+46.23	23.00' RT

DESIGNED HAW
DRAWN HAW
CRP 382822
HOR. 1" = 20'
VERT. N/A
DATE 10/31/2005
DWG: NE15I01
SHEET 60 OF 73

CALL 48 HOURS BEFORE YOU DIG
1-800-553-4344
"It's the Law"
NORTHWEST UTILITIES NOTIFICATION CENTER

DESIGN & ENGINEERING DIVISION

NE 15TH AVENUE INTERSECTIONS

HEATHER A. WEEKS
STATE OF WASHINGTON
PROFESSIONAL ENGINEER
11/2/05
EXPIRES: 11/08/06

JACOBS
JACOBS CIVIL INC.
600 108th Avenue NE.
Suite 700
Bellevue, WA 98004
Phone: (425)452-8000
Fax: (425)452-1212

CLARK COUNTY WASHINGTON

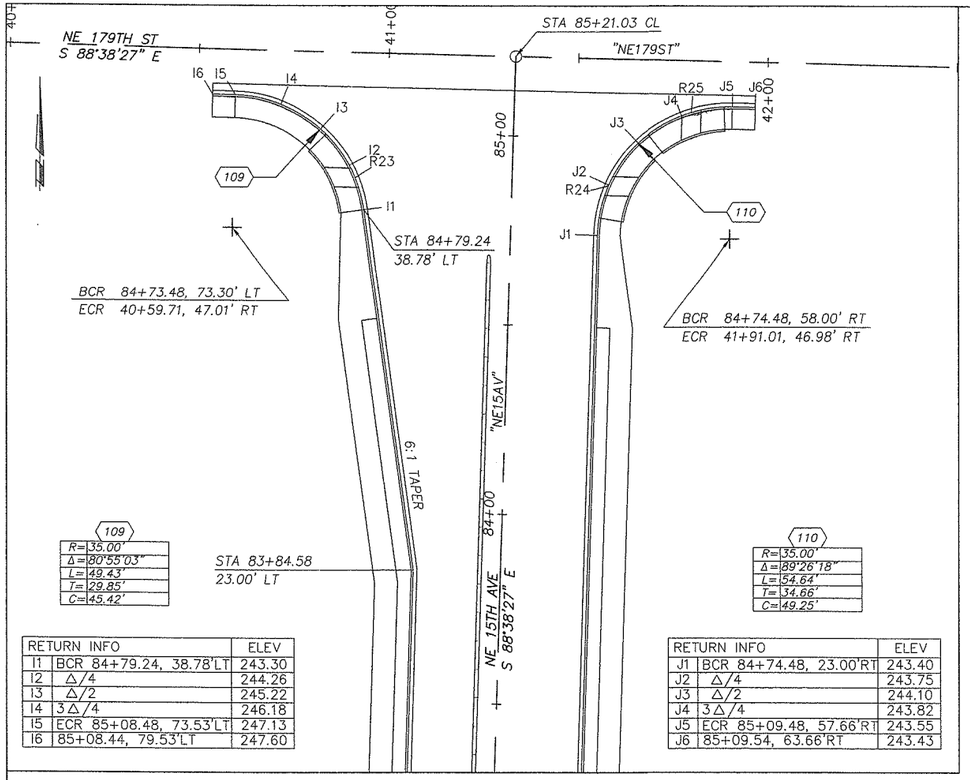

109	
R=	35.00'
Δ=	80°55'03"
L=	49.43'
T=	29.85'
C=	45.42'

110	
R=	35.00'
Δ=	89°26'18"
L=	54.64'
T=	34.66'
C=	49.25'

RETURN INFO		ELEV
I1	BCR 84+79.24, 38.78'LT	243.30
I2	Δ/4	244.26
I3	Δ/2	245.22
I4	3Δ/4	246.18
I5	ECR 85+08.48, 73.53'LT	247.13
I6	85+08.44, 79.53'LT	247.60

RETURN INFO		ELEV
J1	BCR 84+74.48, 23.00'RT	243.40
J2	Δ/4	243.75
J3	Δ/2	244.10
J4	3Δ/4	243.82
J5	ECR 85+09.48, 57.66'RT	243.55
J6	85+09.54, 63.66'RT	243.43

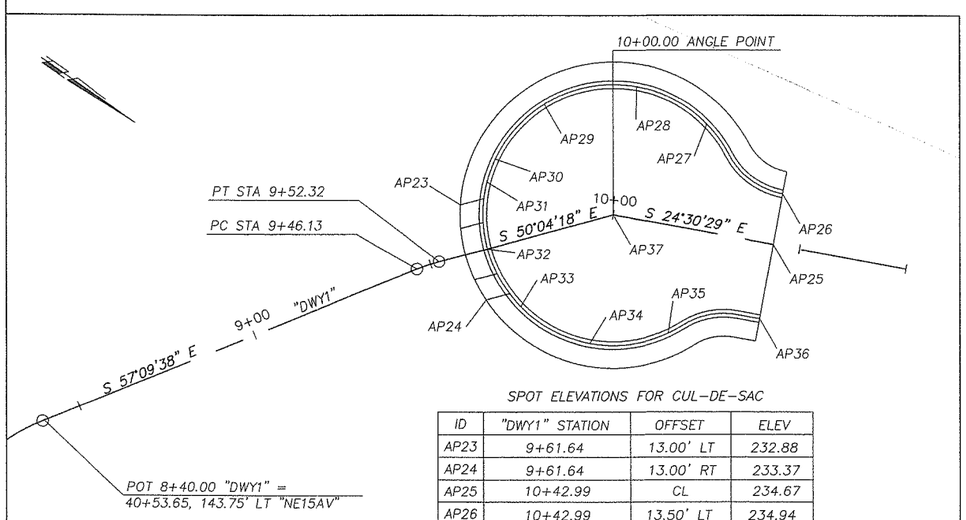

SPOT ELEVATIONS FOR CUL-DE-SAC

ID	"DWY1" STATION	OFFSET	ELEV
AP23	9+61.64	13.00' LT	232.88
AP24	9+61.64	13.00' RT	233.37
AP25	10+42.99	CL	234.67
AP26	10+42.99	13.50' LT	234.94
AP27	10+20.00	28.11' LT	234.07
AP28	10+00.00	34.50' LT	233.40
AP29	9+90.00	33.02' LT	232.61
AP30	9+73.75	22.33' LT	232.00
AP31	9+70.00	17.04' LT	232.14
AP32	9+65.50	CL	232.52
AP33	9+70.00	17.04' RT	232.91
AP34	10+00.00	34.50' RT	233.36
AP35	10+20.00	28.11' RT	233.82
AP36	10+42.99	20.00' RT	234.37
AP37	10+00.00	CL	233.70

SPOT ELEVATIONS FOR DRIVEWAYS

ID	STATION	OFFSET	ELEV
AP38	47+17.77 "NE15AV"	29.00' LT	267.27
AP39	47+17.77 "NE15AV"	61.00' LT	265.23
AP40	47+33.77 "NE15AV"	62.00' LT	265.09
AP41	47+33.77 "NE15AV"	29.00' LT	267.94

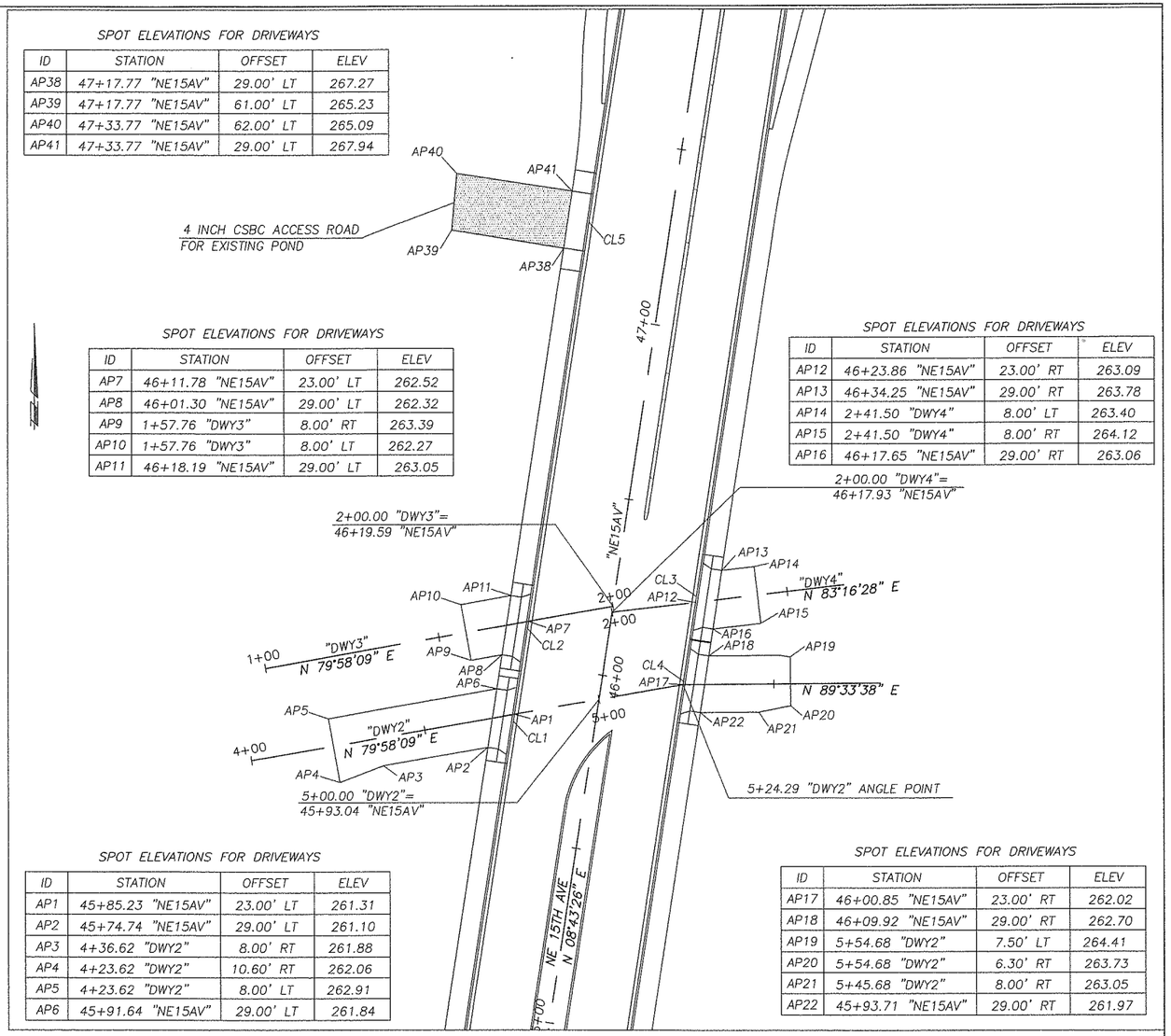

SPOT ELEVATIONS FOR DRIVEWAYS

ID	STATION	OFFSET	ELEV
AP7	46+11.78 "NE15AV"	23.00' LT	262.52
AP8	46+01.30 "NE15AV"	29.00' LT	262.32
AP9	1+57.76 "DWY3"	8.00' RT	263.39
AP10	1+57.76 "DWY3"	8.00' LT	262.27
AP11	46+18.19 "NE15AV"	29.00' LT	263.05

SPOT ELEVATIONS FOR DRIVEWAYS

ID	STATION	OFFSET	ELEV
AP12	46+23.86 "NE15AV"	23.00' RT	263.09
AP13	46+34.25 "NE15AV"	29.00' RT	263.78
AP14	2+41.50 "DWY4"	8.00' LT	263.40
AP15	2+41.50 "DWY4"	8.00' RT	264.12
AP16	46+17.65 "NE15AV"	29.00' RT	263.06

SPOT ELEVATIONS FOR DRIVEWAYS

ID	STATION	OFFSET	ELEV
AP1	45+85.23 "NE15AV"	23.00' LT	261.31
AP2	45+74.74 "NE15AV"	29.00' LT	261.10
AP3	4+36.62 "DWY2"	8.00' RT	261.88
AP4	4+23.62 "DWY2"	10.60' RT	262.06
AP5	4+23.62 "DWY2"	8.00' LT	262.91
AP6	45+91.64 "NE15AV"	29.00' LT	261.84

SPOT ELEVATIONS FOR DRIVEWAYS

ID	STATION	OFFSET	ELEV
AP17	46+00.85 "NE15AV"	23.00' RT	262.02
AP18	46+09.92 "NE15AV"	29.00' RT	262.70
AP19	5+54.68 "DWY2"	7.50' LT	264.41
AP20	5+54.68 "DWY2"	6.30' RT	263.73
AP21	5+45.68 "DWY2"	8.00' RT	263.05
AP22	45+93.71 "NE15AV"	29.00' RT	261.97

CL OF CONCRETE APPROACHES @ FACE OF CURB

ID	15TH STATION	OFFSET
CL1	45+83.19	23.00' LT
CL2	46+09.74	23.00' LT
CL3	46+25.95	23.00' RT
CL4	46+01.82	23.00' RT
CL5	47+25.77	23.00' LT

CL OF RAMPS @ FACE OF CURB

ID	15TH STATION	OFFSET
R23	84+87.57	41.26' LT
R24	84+87.57	25.54' RT
R25	85+07.66	46.86' RT

NOTES:

1) ALL OFFSETS & ELEVATIONS ARE TO BOTTOM FACE OF CURB.

2) ALL RAMPS SHOWN ON THIS SHEET ARE TYPE 2 ALTERNATE RAMPS PER CLARK CO STD PLAN F2b, WITH RAMP TEXTURE AND TRUNCATED DOME DETECTABLE WARNING PATTERN PER CLARK CO STD PLANS F11 & F10.

3) ALL CEMETERY DRIVEWAYS (CL1 THROUGH CL4) ARE TYPE 2 CEMENT CONCRETE APPROACHES PER CLARK CO STD PLAN F15.

4) DRIVEWAY CL5 FOR ACCESS ROAD AND CUL-DE-SAC DRIVEWAY ON UNION ROAD ARE TYPE 3 CEMENT CONCRETE APPROACHES PER CLARK CO STD PLAN F16.

5) ADJUSTMENTS TO ELEVATIONS MAY BE NECESSARY AT LOCATIONS THAT MUST MATCH TO EXISTING.

DESIGNED	HAW
DRAWN	HAW
CRP	382822
HOR.	1" = 20'
VERT.	N/A
DATE	10/31/2005
DWG:	NE15I02
SHEET 61	OF 73

CALL 48 HOURS BEFORE YOU DIG 1-800-553-4344 "It's the Law" NORTHWEST UTILITIES NOTIFICATION CENTER

DESIGN & ENGINEERING DIVISION

NE 15TH AVENUE INTERSECTIONS

HEATHER A. WEEKS STATE OF WASHINGTON REGISTERED PROFESSIONAL ENGINEER 38221 11/08/05

EXPIRES: 11/08/06

JACOBS

JACOBS CIVIL INC.
600 108th Avenue NE,
Suite 700
Bellevue, WA 98004
Phone: (425)452-8000
Fax: (425)452-1212

CLARK COUNTY WASHINGTON

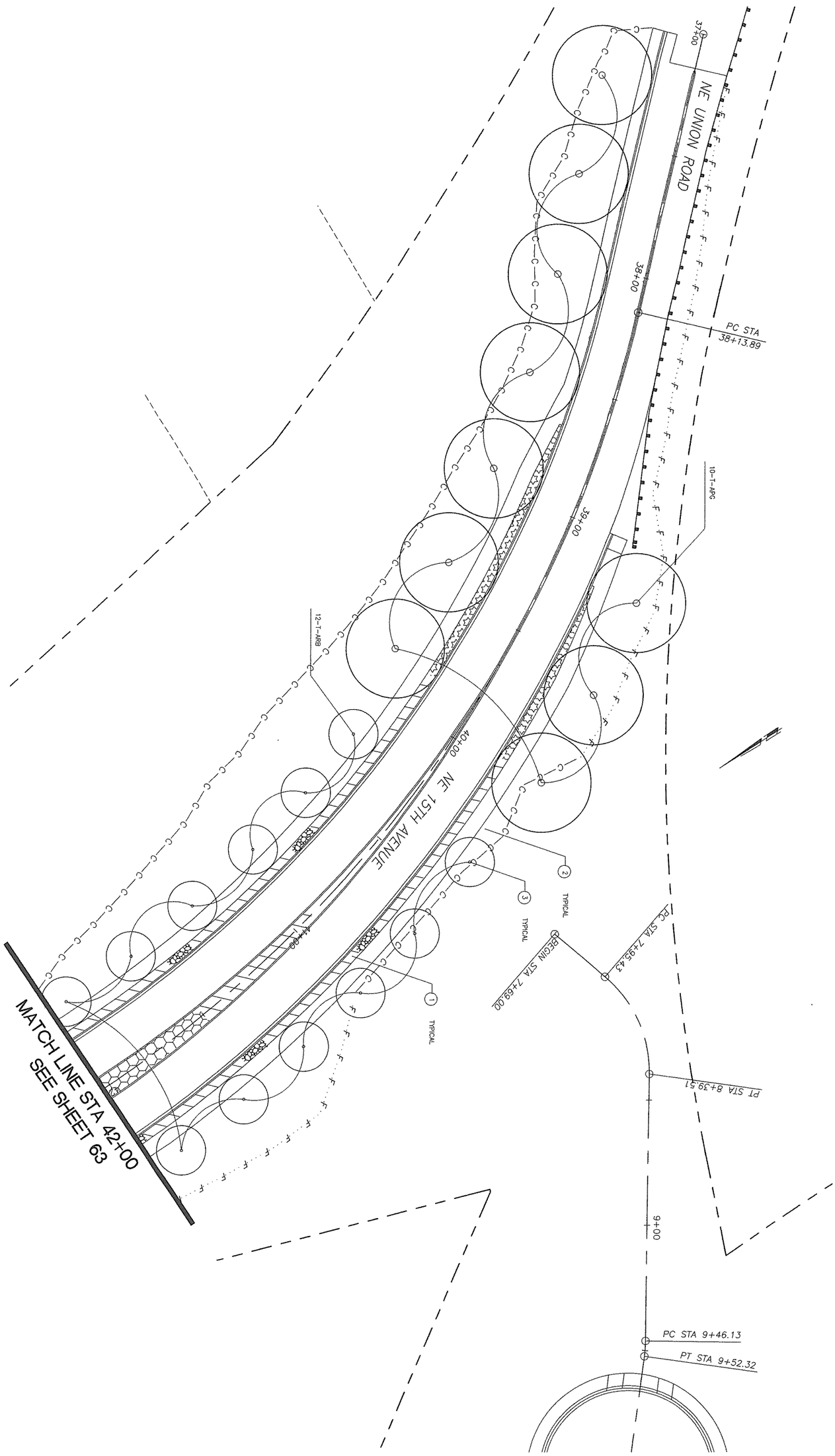

CLARK COUNTY WASHINGTON

JACOBS

JACOBS CIVIL INC.
600 108th Avenue NE,
Suite 700
Bellevue, WA 98004
Phone: (425)452-8000
Fax: (425)452-1212

NE 15TH AVENUE
LANDSCAPE PLAN

CALL 48 HOURS BEFORE YOU DIG
1-800-553-4344
"It's the Law"
NORTHWEST UTILITIES NOTIFICATION CENTER

DESIGNED	JDW
DRAWN	HAW
CRP	382822
HOR.	1"=20'
VERT.	N/A
DATE	10/31/2005
DWG:	NE15L01
SHEET 62	OF 73

MATCH LINE STA 49+50

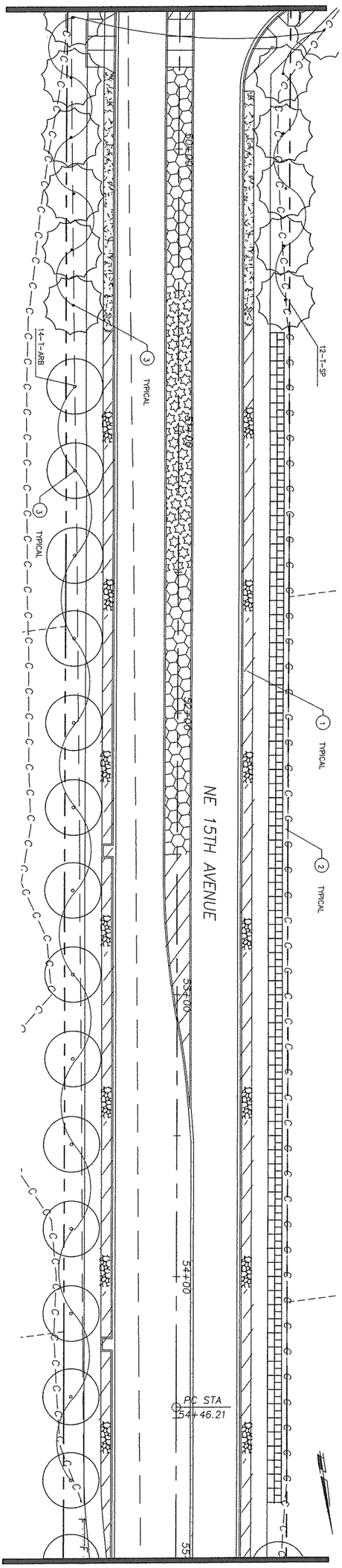

MATCH LINE STA 55+00
SEE SHEET 64

MATCH LINE STA 44+50

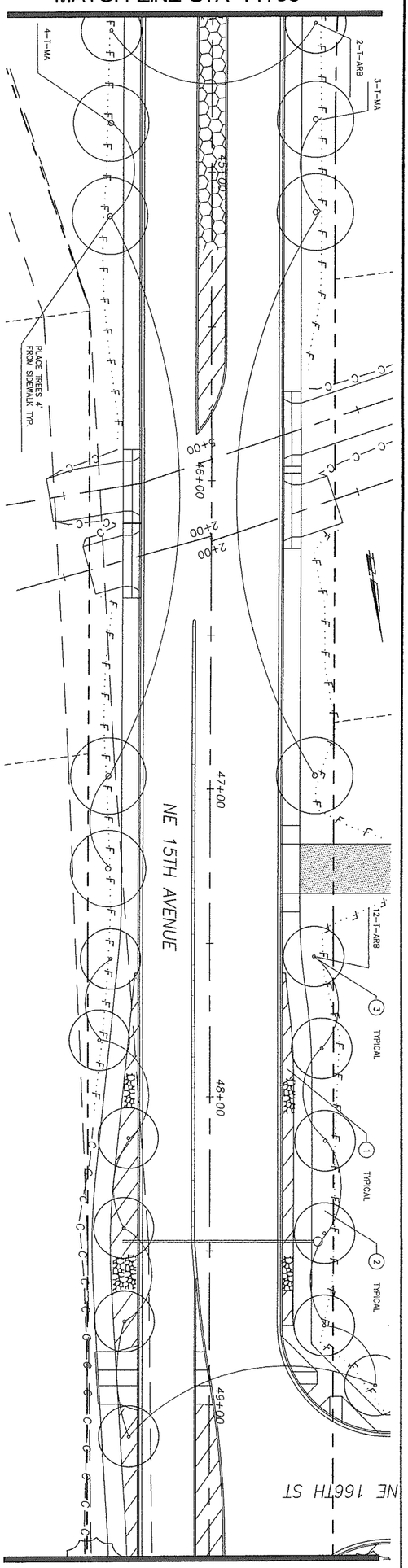

MATCH LINE STA 49+50

SEE SHEET 62
MATCH LINE STA 42+00

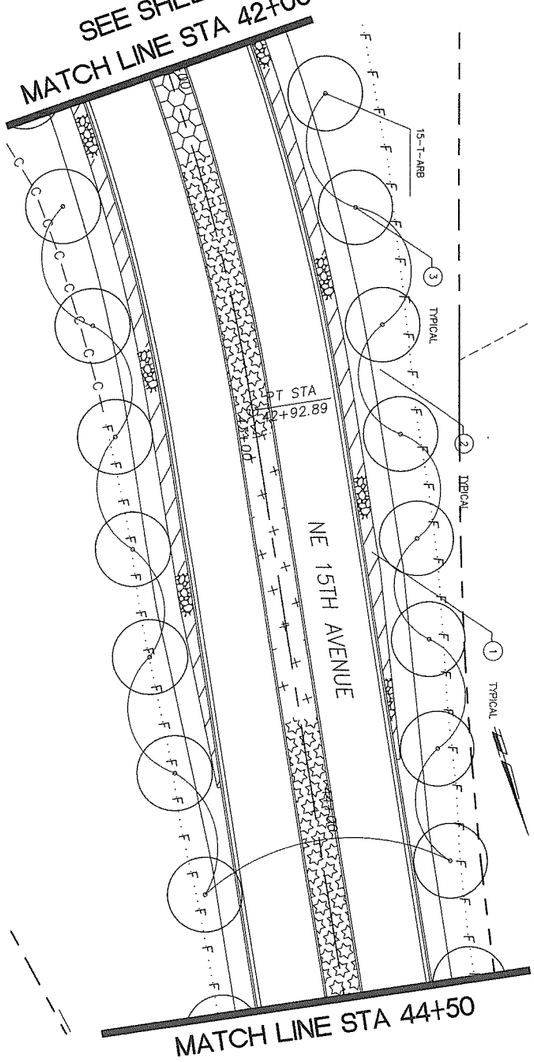

MATCH LINE STA 44+50

CLARK COUNTY WASHINGTON

JACOBS

JACOBS CIVIL INC.
600 108th Avenue NE,
Suite 700
Bellevue, WA 98004
Phone: (425)452-8000
Fax: (425)452-1212

NE 15TH AVENUE
LANDSCAPE PLAN

CALL 48 HOURS BEFORE YOU DIG
1-800-553-4344
"It's the Law"
NORTHWEST UTILITIES NOTIFICATION CENTER

DESIGNED	JDW
DRAWN	HAW
CRP	382822
HOR.	1"=20'
VERT.	N/A
DATE	10/31/2005
DWG:	NE15L02
SHEET 63	OF 73

MATCH LINE STA 65+50

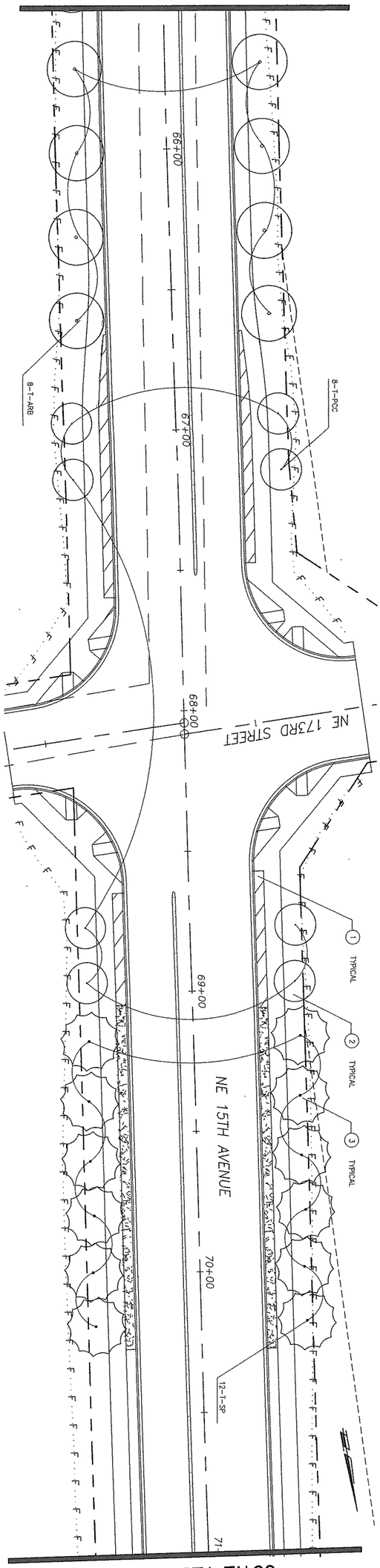

MATCH LINE STA 71+00
SEE SHEET 65

MATCH LINE STA 60+50

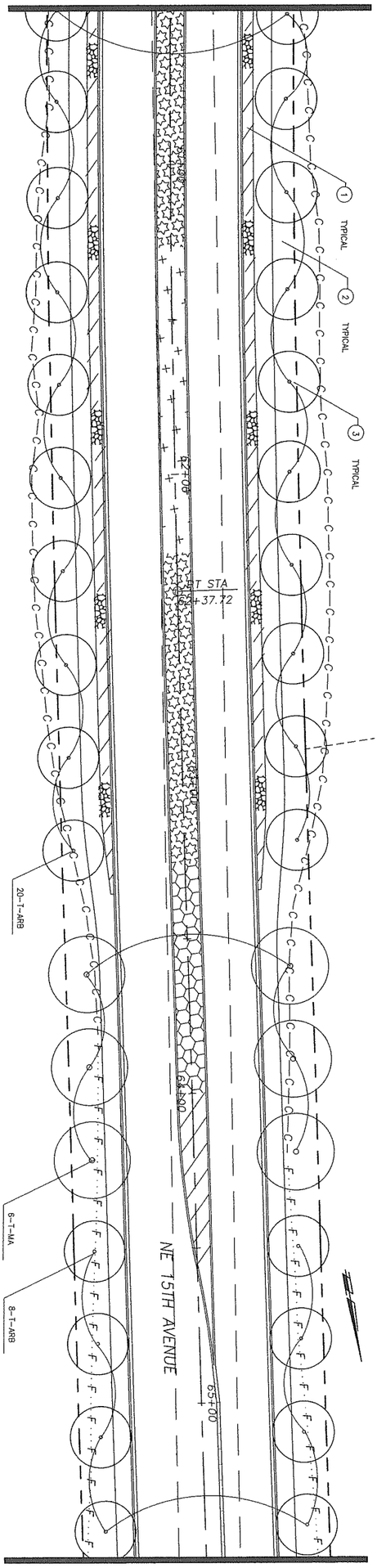

MATCH LINE STA 65+50

SEE SHEET 63
MATCH LINE STA 55+00

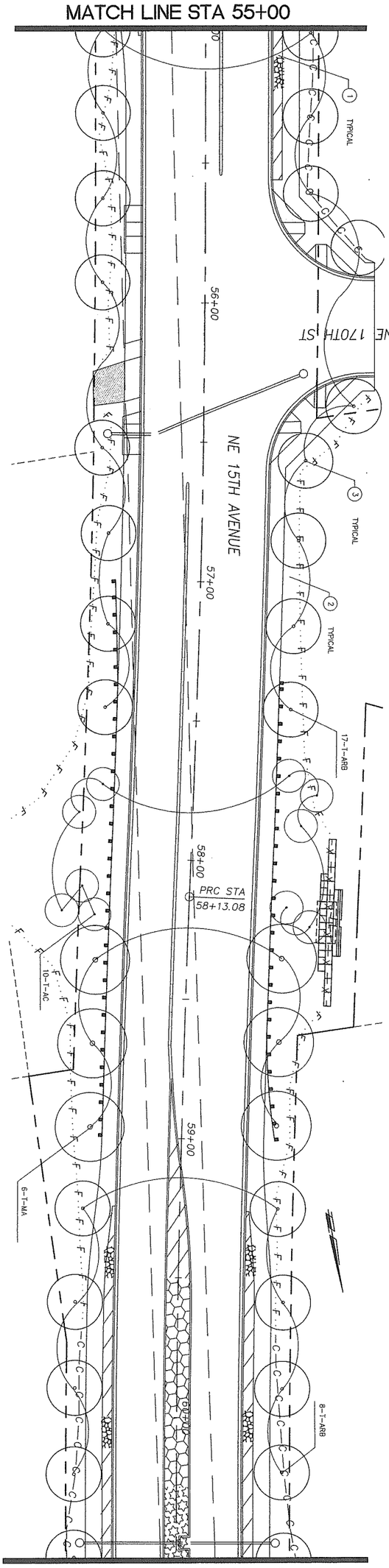

MATCH LINE STA 60+50

CLARK COUNTY WASHINGTON

JACOBS

JACOBS CIVIL INC.
600 108th Avenue NE,
Suite 700
Bellevue, WA 98004
Phone: (425)452-8000
Fax: (425)452-1212

NE 15TH AVENUE
LANDSCAPE PLAN

CALL 48 HOURS BEFORE YOU DIG
1-800-553-4344
"It's the Law"
NORTHWEST UTILITIES NOTIFICATION CENTER

DESIGNED	JDW
DRAWN	HAW
CRP	382822
HOR.	1"=20'
VERT.	N/A
DATE	10/31/2005
DWG:	NE15L03
SHEET 64	OF 73

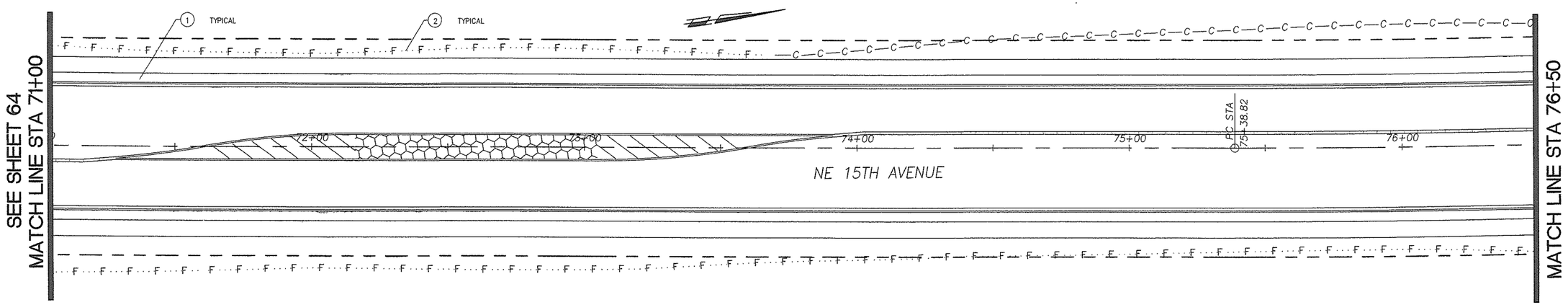

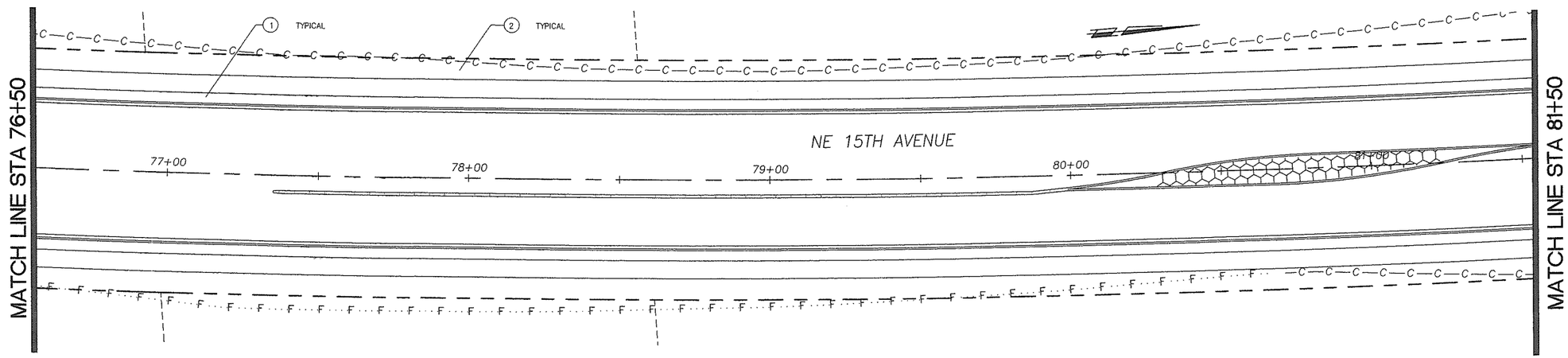

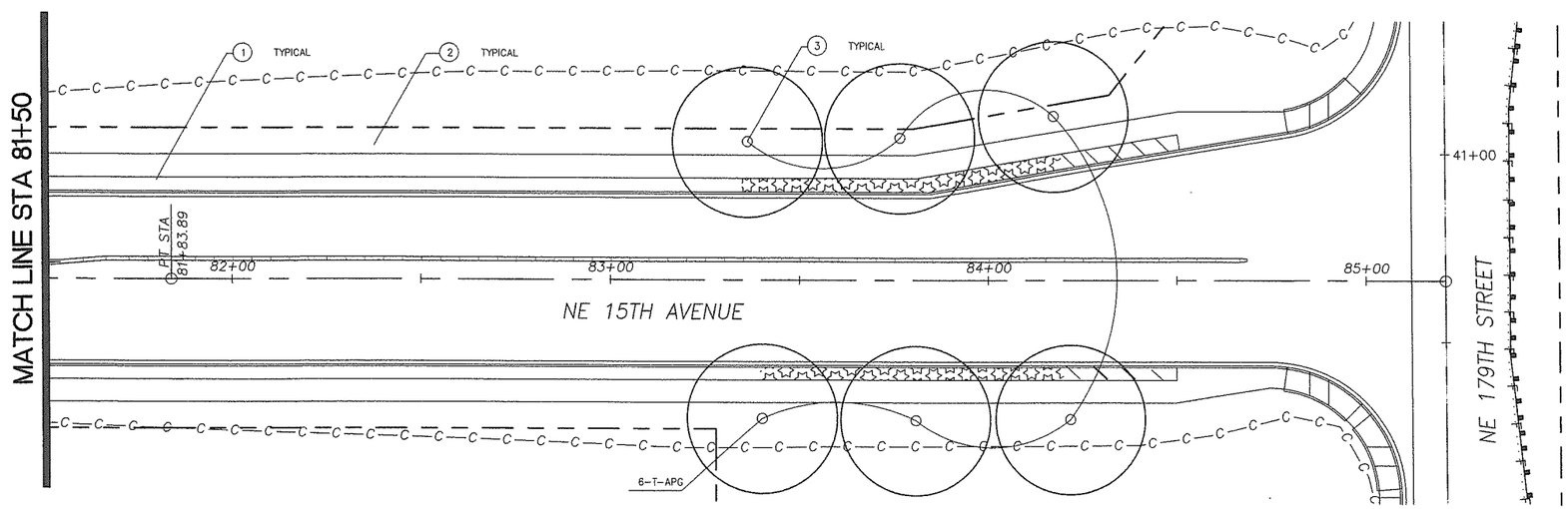

DESIGNED JDW
DRAWN HAW
CRP 382822
HOR. 1"=20'
VERT. N/A
DATE 10/31/2003
DWG: NE15L04
SHEET 65 OF 73

CALL 48 HOURS BEFORE YOU DIG
1-800-553-4344
"It's the Law"
NORTHWEST UTILITIES NOTIFICATION CENTER

NE 15TH AVENUE LANDSCAPE PLAN

JACOBS
JACOBS CIVIL INC.
600 108th Avenue NE,
Suite 700
Bellevue, WA 98004
Phone: (425)452-8000
Fax: (425)452-1212

CLARK COUNTY WASHINGTON

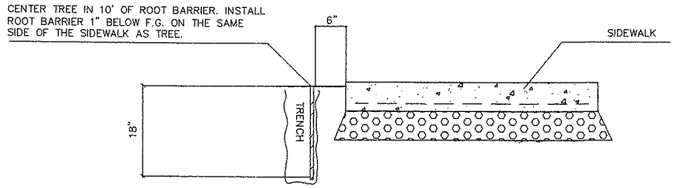

1/66 ROOT BARRIER

NOT TO SCALE

GENERAL NOTES:

1. INSTALL MINIMUM 2" DEPTH OF EROSION CONTROL MULCH (SEE SPECS.) IN PLANTING AREA BETWEEN CURB AND SIDEWALK. MULCH TO BE 1" BELOW TOP OF CURB AND SIDEWALK. "BOTH SIDES OF ROAD."

2. ALL AREAS BETWEEN R.O.W. LINE AND OUTSIDE EDGES OF SIDEWALK OR AREAS DISTURBED BY CONSTRUCTION TO BE SEEDED WITH ROUGH GRASS (SEE SPECS). "BOTH SIDES OF ROAD."

3. INSTALL ROOT BARRIER FOR EACH TREE. ROOT BARRIER TO BE 10' IN LENGTH, CENTER ON TREE AND PLACE ADJACENT TO SIDEWALK. SEE SPECS AND DETAILS. "BOTH SIDES OF ROAD."

ALL TREES TO HAVE 3' DIAMETER TREE RING WITH BARK MULCH.

N.E.15TH AVE PLANT LIST

SYMBOL	NAME	SIZE	QTY/H.A.	COMMENTS
TREES				
T-SP	ABIES PINSAPO "GLAUCA" COLUMNAR BLUE SPANISH FIR	1-1/2" CAL	24	CONTAINER ONLY
T-ARB	ACER RUBRUM 'BOWHALL' BOWHALL RED MAPLE	1-1/2" CAL	116	CONTAINER ONLY
T-AC	ACER CIRCINATUM VINE MAPLE	1-1/2" CAL	10	CONTAINER ONLY
T-PCC	PYRUS CALLERYANA "CAPITAL" CAPITAL FLOWERING PEAR	1-1/2" CAL	8	CONTAINER ONLY
T-MA	MALUS 'ADIRONDAK' FLOWERING CRABAPPLE	1-1/2" CAL	19	CONTAINER ONLY
T-APG	ACER PLATANOIDES 'GLOBOSUM' GLOBE MAPLE	1-1/2" CAL	16	CONTAINER ONLY
SHRUBS				
	ARCT. UVA-URSI ' MASSACHUSETTES ' KINNIKINNICK	1 GAL	FILL AREA	CONTAINER ONLY, 3'O.C.
	ERICA C. ' VIVELLII ' VIBRANT FLOWERING HEATHER	1 GAL	FILL AREA	CONTAINER ONLY, 3'O.C.
	NANDINA D. ' HARBOUR DWARF ' COMPACT HEAVENLY BAMBOO	2 GAL	FILL AREA	CONTAINER ONLY, 3'O.C.
	VIBURNUM DAVIDII DAVID VIBURNUM	2 GAL	FILL AREA	CONTAINER ONLY, 3'O.C.
	SPIRAEA JAPONICA	1 GAL	FILL AREA	CONTAINER ONLY, 2'O.C.
	PIERIS JAPONICA	1 GAL	FILL AREA	CONTAINER ONLY, 3'O.C.

VERIFY ALL QUANTITIES

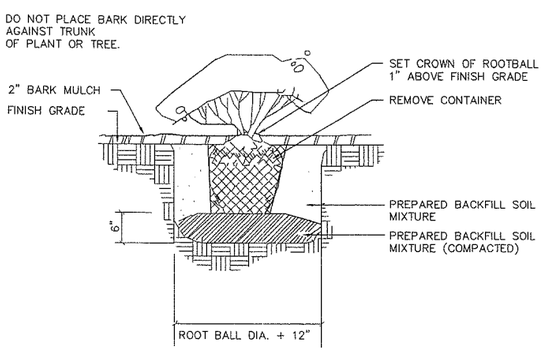

2/66 SHRUB PLANTING DETAIL

NOT TO SCALE

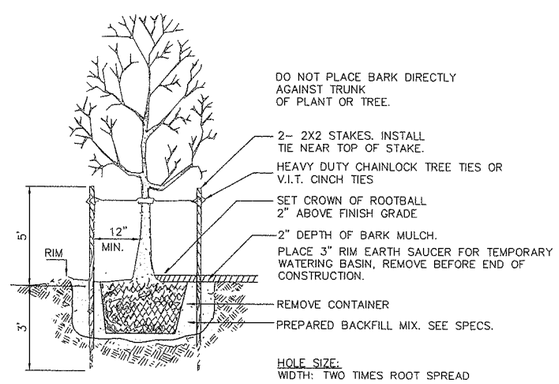

3/66 DECIDUOUS TREE IN SHRUB AREAS

NOT TO SCALE

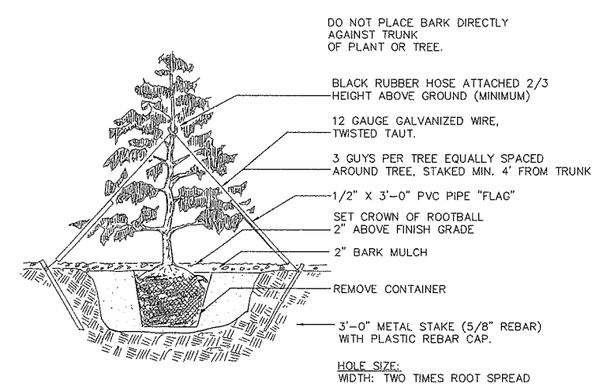

4/66 CONIFEROUS TREE

NOT TO SCALE

DESIGNED JDW
DRAWN HAW
CRP 382822
HOR. N.T.S.
VERT. N/A
DATE 10/31/2005
DWG: NE15L05
SHEET 66 OF 73

CALL 48 HOURS BEFORE YOU DIG
1-800-553-4344
"It's the Law"
NORTHWEST UTILITIES NOTIFICATION CENTER

NE 15TH AVENUE LANDSCAPE DETAILS

JACOBS
JACOBS CIVIL INC.
600 108th Avenue NE,
Suite 700
Bellevue, WA 98004
Phone: (425)452-8000
Fax: (425)452-1212

CLARK COUNTY WASHINGTON

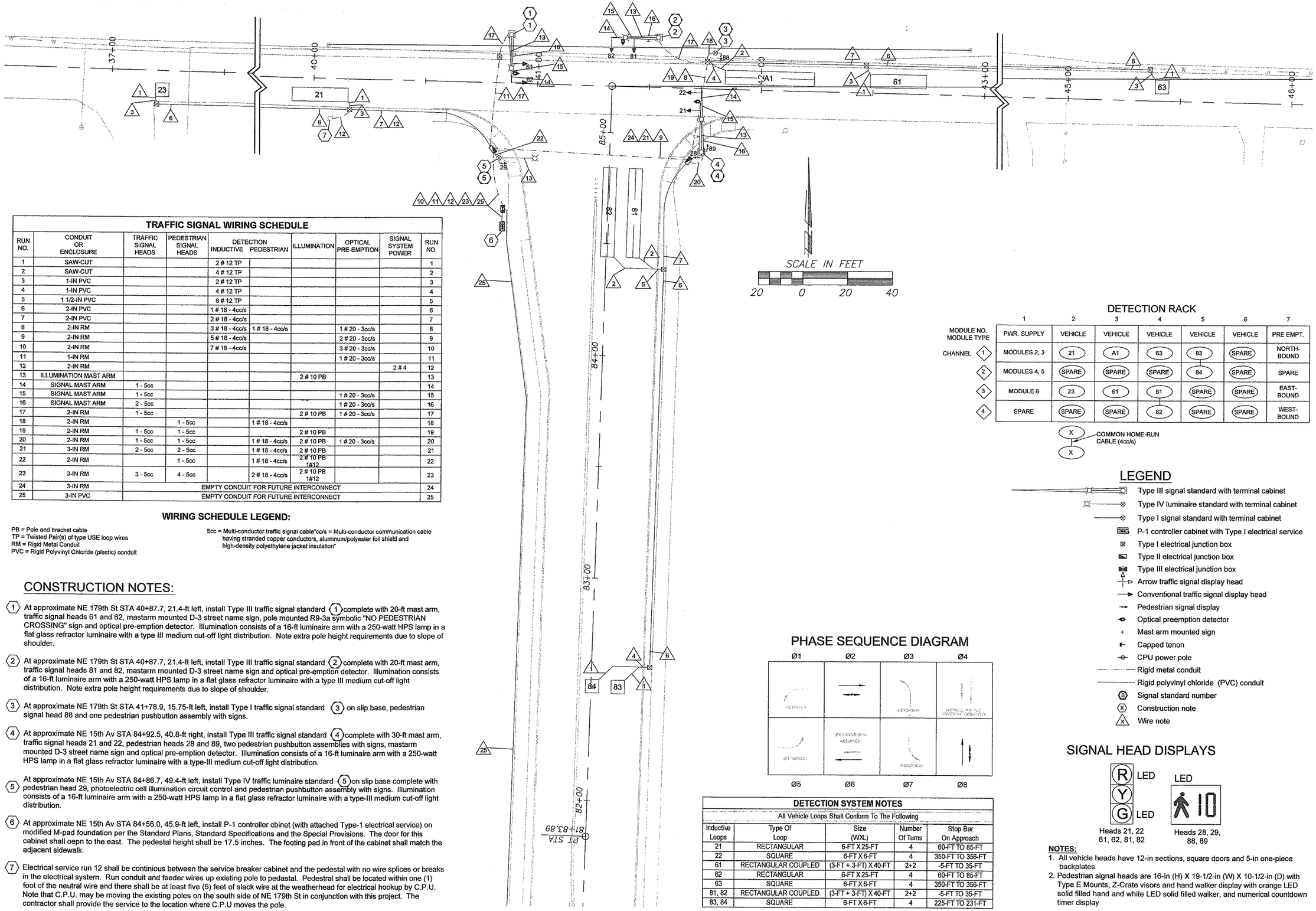

TRAFFIC SIGNAL WIRING SCHEDULE

RUN NO.	CONDUIT OR ENCLOSURE	TRAFFIC SIGNAL HEADS	PEDESTRIAN SIGNAL HEADS	DETECTION INDUCTIVE	DETECTION PEDESTRIAN	ILLUMINATION	OPTICAL PRE-EMPTION	SIGNAL SYSTEM POWER	RUN NO.
1	SAW-CUT			2 # 12 TP					1
2	SAW-CUT			4 # 12 TP					2
3	1-IN PVC			2 # 12 TP					3
4	1-IN PVC			4 # 12 TP					4
5	1 1/2-IN PVC			8 # 12 TP					5
6	2-IN PVC			1 # 18 - 4cc/s					6
7	2-IN PVC			2 # 18 - 4cc/s					7
8	2-IN RM			3 # 18 - 4cc/s	1 # 18 - 4cc/s		1 # 20 - 3cc/s		8
9	2-IN RM			5 # 18 - 4cc/s			2 # 20 - 3cc/s		9
10	2-IN RM			7 # 18 - 4cc/s			3 # 20 - 3cc/s		10
11	1-IN RM						1 # 20 - 3cc/s		11
12	2-IN RM							2 # 4	12
13	ILLUMINATION MAST ARM					2 # 10 PB			13
14	SIGNAL MAST ARM	1 - 5cc							14
15	SIGNAL MAST ARM	1 - 5cc					1 # 20 - 3cc/s		15
16	SIGNAL MAST ARM	2 - 5cc					1 # 20 - 3cc/s		16
17	2-IN RM	1 - 5cc				2 # 10 PB	1 # 20 - 3cc/s		17
18	2-IN RM		1 - 5cc		1 # 18 - 4cc/s				18
19	2-IN RM	1 - 5cc	1 - 5cc			2 # 10 PB			19
20	2-IN RM	1 - 5cc	1 - 5cc		1 # 18 - 4cc/s	2 # 10 PB	1 # 20 - 3cc/s		20
21	3-IN RM	2 - 5cc	2 - 5cc		1 # 18 - 4cc/s	2 # 10 PB			21
22	2-IN RM		1 - 5cc		1 # 18 - 4cc/s	2 # 10 PB 1#12			22
23	3-IN RM	3 - 5cc	4 - 5cc		2 # 18 - 4cc/s	2 # 10 PB 1#12			23
24	3-IN RM	EMPTY CONDUIT FOR FUTURE INTERCONNECT							24
25	3-IN PVC	EMPTY CONDUIT FOR FUTURE INTERCONNECT							25

WIRING SCHEDULE LEGEND:

PB = Pole and bracket cable
TP = Twisted Pair(s) of type USE loop wires
RM = Rigid Metal Conduit
PVC = Rigid Polyvinyl Chloride (plastic) conduit

5cc = Multi-conductor traffic signal cable"cc/s = Multi-conductor communication cable having stranded copper conductors, aluminum/polyester foil shield and high-density polyethylene jacket insulation"

CONSTRUCTION NOTES:

(1) At approximate NE 179th St STA 40+87.7, 21.4-ft left, install Type III traffic signal standard (1) complete with 20-ft mast arm, traffic signal heads 61 and 62, mastarm mounted D-3 street name sign, pole mounted R9-3a symbolic "NO PEDESTRIAN CROSSING" sign and optical pre-emption detector. Illumination consists of a 16-ft luminaire arm with a 250-watt HPS lamp in a flat glass refractor luminaire with a type III medium cut-off light distribution. Note extra pole height requirements due to slope of shoulder.

(2) At approximate NE 179th St STA 40+87.7, 21.4-ft left, install Type III traffic signal standard (2) complete with 20-ft mast arm, traffic signal heads 81 and 82, mastarm mounted D-3 street name sign and optical pre-emption detector. Illumination consists of a 16-ft luminaire arm with a 250-watt HPS lamp in a flat glass refractor luminaire with a type III medium cut-off light distribution. Note extra pole height requirements due to slope of shoulder.

(3) At approximate NE 179th St STA 41+78.9, 15.75-ft left, install Type I traffic signal standard (3) on slip base, pedestrian signal head 88 and one pedestrian pushbutton assembly with signs.

(4) At approximate NE 15th Av STA 84+92.5, 40.8-ft right, install Type III traffic signal standard (4) complete with 30-ft mast arm, traffic signal heads 21 and 22, pedestrian heads 28 and 89, two pedestrian pushbutton assemblies with signs, mastarm mounted D-3 street name sign and optical pre-emption detector. Illumination consists of a 16-ft luminaire arm with a 250-watt HPS lamp in a flat glass refractor luminaire with a type-III medium cut-off light distribution.

(5) At approximate NE 15th Av STA 84+86.7, 49.4-ft left, install Type IV traffic luminaire standard (5) on slip base complete with pedestrian head 29, photoelectric cell illumination circuit control and pedestrian pushbutton assembly with signs. Illumination consists of a 16-ft luminaire arm with a 250-watt HPS lamp in a flat glass refractor luminaire with a type-III medium cut-off light distribution.

(6) At approximate NE 15th Av STA 84+56.0, 45.9-ft left, install P-1 controller cbinet (with attached Type-1 electrical service) on modified M-pad foundation per the Standard Plans, Standard Specifications and the Special Provisions. The door for this cabinet shall oepn to the east. The pedestal height shall be 17.5 inches. The footing pad in front of the cabinet shall match the adjacent sidewalk.

(7) Electrical service run 12 shall be continious between the service breaker cabinet and the pedestal with no wire splices or breaks in the electrical system. Run conduit and feeder wires up existing pole to pedastal. Pedestral shall be located within one (1) foot of the neutral wire and there shall be at least five (5) feet of slack wire at the weatherhead for electrical hookup by C.P.U. Note that C.P.U. may be moving the existing poles on the south side of NE 179th St in conjunction with this project. The contractor shall provide the service to the location where C.P.U moves the pole.

DETECTION RACK

MODULE NO. / MODULE TYPE	1 PWR. SUPPLY	2 VEHICLE	3 VEHICLE	4 VEHICLE	5 VEHICLE	6 VEHICLE	7 PRE EMPT.
CHANNEL 1	MODULES 2, 3	21	A1	63	83	SPARE	NORTH-BOUND
2	MODULES 4, 5	SPARE	SPARE	SPARE	84	SPARE	SPARE
3	MODULE 6	23	61	81	SPARE	SPARE	EAST-BOUND
4	SPARE	SPARE	SPARE	82	SPARE	SPARE	WEST-BOUND

X — X COMMON HOME-RUN CABLE (4cc/s)

LEGEND

- Type III signal standard with terminal cabinet
- Type IV luminaire standard with terminal cabinet
- Type I signal standard with terminal cabinet
- P-1 controller cabinet with Type I electrical service
- Type I electrical junction box
- Type II electrical junction box
- Type III electrical junction box
- Arrow traffic signal display head
- Conventional traffic signal display head
- Pedestrian signal display
- Optical preemption detector
- Mast arm mounted sign
- Capped tenon
- CPU power pole
- Rigid metal conduit
- Rigid polyvinyl chloride (PVC) conduit
- (S) Signal standard number
- (X) Construction note
- (X) Wire note

PHASE SEQUENCE DIAGRAM

DETECTION SYSTEM NOTES

All Vehicle Loops Shall Conform To The Following

Inductive Loops	Type Of Loop	Size (W/XL)	Number Of Turns	Stop Bar On Approach
21	RECTANGULAR	6-FT X 25-FT	4	60-FT TO 85-FT
22	SQUARE	6-FT X 6-FT	4	350-FT TO 356-FT
61	RECTANGULAR COUPLED	(3-FT + 3-FT) X 40-FT	2+2	-5-FT TO 35-FT
62	RECTANGULAR	6-FT X 25-FT	4	60-FT TO 85-FT
63	SQUARE	6-FT X 6-FT	4	350-FT TO 356-FT
81, 82	RECTANGULAR COUPLED	(3-FT + 3-FT) X 40-FT	2+2	-5-FT TO 35-FT
83, 84	SQUARE	6-FT X 6-FT	4	225-FT TO 231-FT

SIGNAL HEAD DISPLAYS

Heads 21, 22 61, 62, 81, 82 — Heads 28, 29, 88, 89

NOTES:

1. All vehicle heads have 12-in sections, square doors and 5-in one-piece backplates
2. Pedestrian signal heads are 16-in (H) X 19-1/2-in (W) X 10-1/2-in (D) with Type E Mounts, Z-Crate visors and hand walker display with orange LED solid filled hand and white LED solid filled walker, and numerical countdown timer display

DESIGNED	RDK
DRAWN	RDK
CRP	382822
HOR.	20-FT
VERT.	
DATE	1/11/06
DWG.	15-179 SIGNAL
SHEET	68 OF

CALL 48 HOURS BEFORE YOU DIG 1-800-553-4344 "It's the Law" NORTHWEST UTILITIES NOTIFICATION CENTER

DALE KLUTE STATE OF WASHINGTON 18878 REGISTERED PROFESSIONAL ENGINEER EXPIRES 07/29/06

DESIGN & ENGINEERING DIVISION
DESIGN SECTION

NEW SIGNAL PLAN
NE 15TH AVENUE AT NE 179TH STREET

proud past, promising future
CLARK COUNTY WASHINGTON

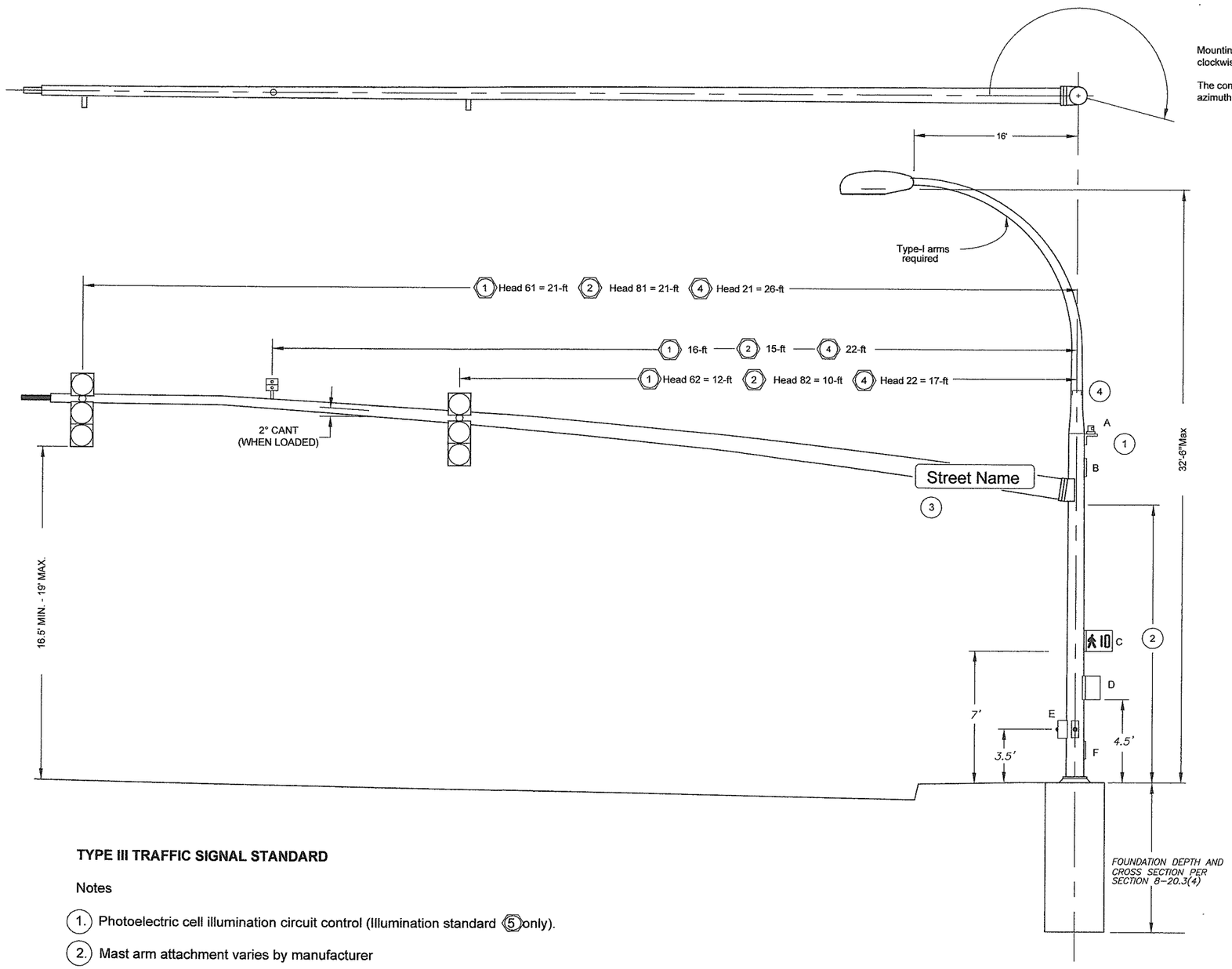

Mounting of appurtenances are measured in degrees clockwise from the control traffic signal mast arm.

The control traffic signal mast arm is given in true azimuth.

APPURTENANCE ORIENTATION

SIGNAL STANDARD	1	2	3	4	5
SIGNAL MAST ARM	179° T.A.	270	N/A	359° T.A.	N/A
LUMINAIRE MAST ARM	0°	0°	N/A	0°	90° T.A.
A	N/A	N/A	N/A	N/A	180°
B	180°	180°	N/A	180°	180°
C	N/A	N/A	97° T.A.	97° / 176°	0°
D	135°	135°	0° T.A.	135°	135°
E	N/A	N/A	180°	7° / 266°	90°
F	180°	180°	See Standard Plan J7-a	180°	180°

T.A. = True Azimuth
A = Illumination photoelectric cell
B = Handhole
C = Pedestrian signal heads
D = Terminal Cabinet
E = Pedestrian pushbuttons with signs
F = Handhole

ELEVATIONS FROM SURVEY

SIGNAL STANDARD	1	2	3
Edge of Pavement Elev STA / Offset	246.28 ft 40+88 / 11 ft left	244.48 ft 41+54 / 11 ft left	243.74 ft 41+79 / 11 ft left
Aerial Utility Elev STA / Offset	260 ft (+/-) 40+88 / 15 ft left	259 ft (+/-) 41+33 / 15 ft left	
Ground Elev at Pole STA / Offset	246.50 ft 40+88 / 21.4 ft left	245.12 ft 41+54 / 21.4 ft left	243.05 ft 41+79 / 15.75 ft left

TYPE III TRAFFIC SIGNAL STANDARD

Notes

1. Photoelectric cell illumination circuit control (Illumination standard 5 only).
2. Mast arm attachment varies by manufacturer
3. Street name signs attached per Standard Plan J-6h. Street name signs are 18-in high and have 8-in upper case and 6-in lower case series "C" black letters on reflectorized diamond grade yellow background. Signs shall include borders, margins and corner radii.

   Street name sign legends are as follows:

   1 and 4 = N.E. 15th Ave.

   2 = N.E. 179th St.
4. Traffic signal nomenclature per WSDOT Standard Plans Section J

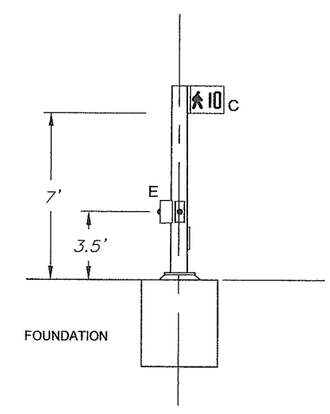

PEDESTRIAN SIGNAL STANDARD

DESIGNED	RDK
DRAWN	RDK
CRP	382822
HOR.	NA
VERT.	NA
DATE	1/11/06
DWG.	SIG DET 2
SHEET 69	OF

CALL 48 HOURS BEFORE YOU DIG
1-800-553-4344
"It's the Law"
NORTHWEST UTILITIES NOTIFICATION CENTER

DALE KLUG
STATE OF WASHINGTON
REGISTERED PROFESSIONAL ENGINEER
1/12/06
EXPIRES 07/29/06

DESIGN & ENGINEERING DIVISION
DESIGN SECTION

SIGNAL STANDARD DETAILS
NE 15TH AVENUE AT NE 179TH STREET

proud past, promising future
CLARK COUNTY WASHINGTON

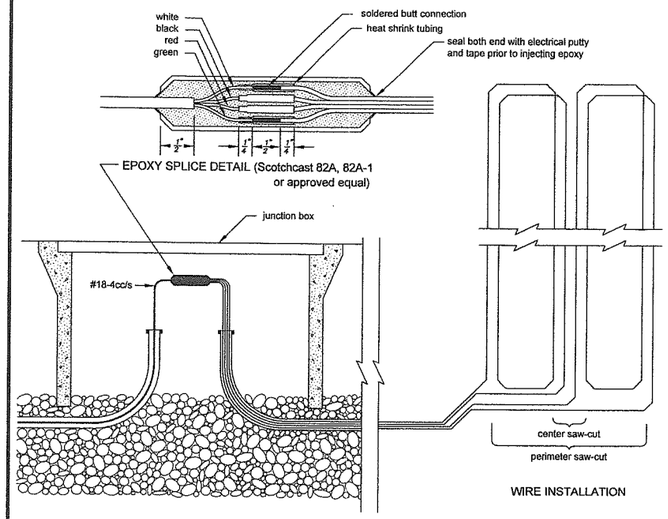

COUPLED LOOPS DETAIL

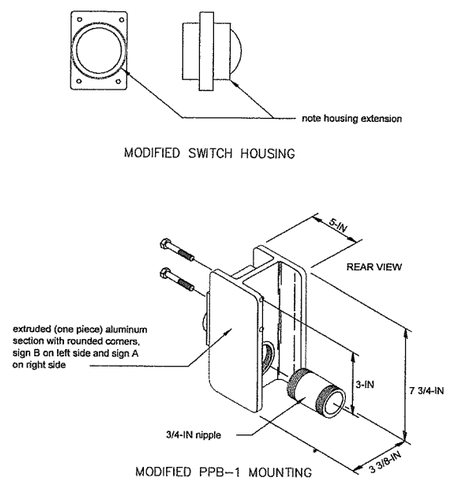

PEDESTRIAN PUSHBUTTON DETAIL

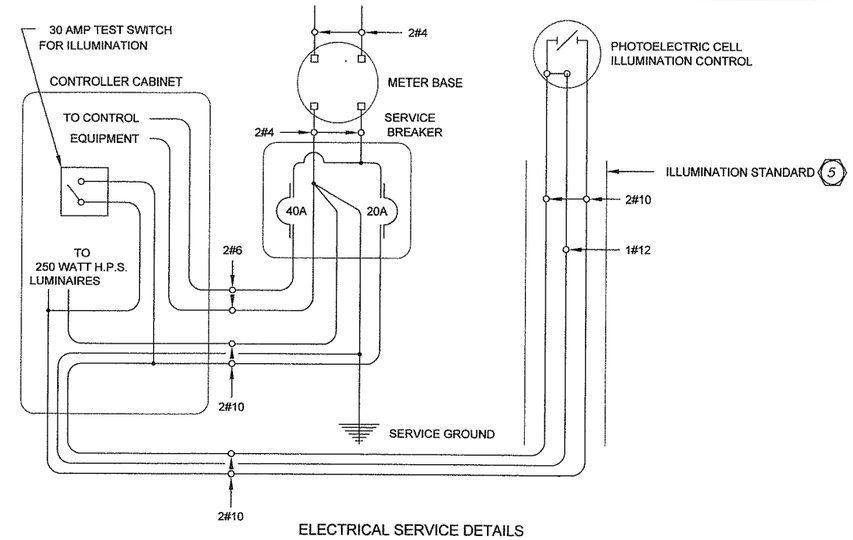

ELECTRICAL SERVICE DETAILS

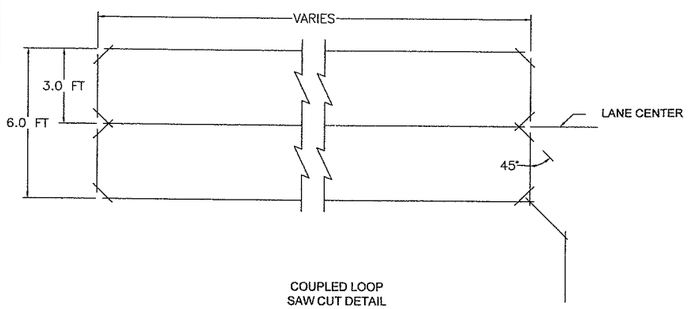

COUPLED LOOP SAW CUT DETAIL

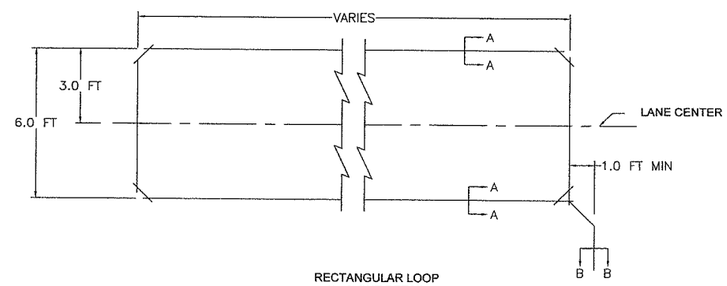

RECTANGULAR LOOP SAW CUT DETAIL (NON COUPLED)

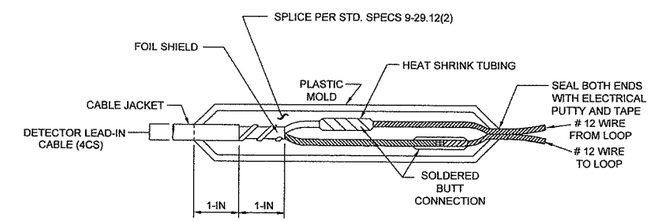

SPLICE DETAIL – NON COUPLED LOOPS

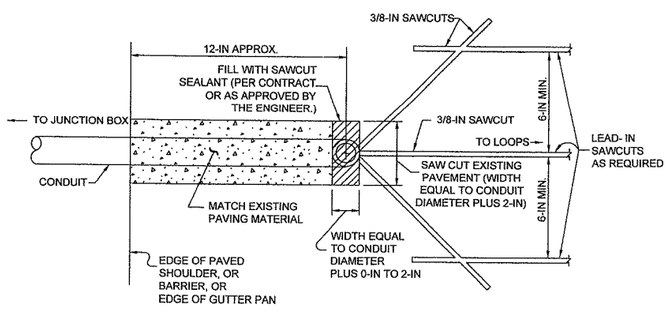

SAWCUT AND CONDUIT CONNECTION PLAN

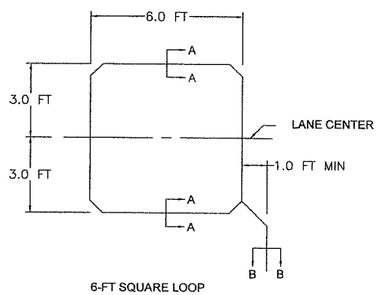

6-FT SQUARE LOOP SAW CUT DETAIL

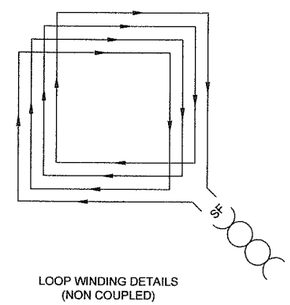

LOOP WINDING DETAILS (NON COUPLED)

LOOP INSTALATION NOTES

1. Install the Junction Box and the lead-in conduit.
2. Sawcut the loop slots and the lead-in slots.
3. Lay out the loop wire starting at the Junction Box, allowing 5-ft minimum slack.
4. Install the wire in the loop slot as shown.
5. Finish laying out the wire at the Junction Box and identify the leads with the loop number, the "S" for start and the "F" for the finish, and the loop series number.
6. Twist each pair of the lead wires three times per foot from the loop to the Junction Box. Reverse the direction of the twist for each successive pair installed.
7. Construct a supplemental splice containing any series loop connections required in the plans. Supplemental splices are subject to the same requirements shown for the loop lead and the shielded cable splice.
8. Splice the loop leads of supplemental splice leads to the shielded cable as noted in the Contract.
9. Complete installation and test loop circuits or combination loop circuits. See Standard Specifications 8-20.3(14)D.
10. Conduit for the loop stubout shall be as required in the Contract.

DESIGNED	RDK
DRAWN	RDK
CRP	382822
HOR.	NA
VERT.	NA
DATE	1/11/06
DWG:	SIG DET 1
SHEET	70 OF

CALL 48 HOURS BEFORE YOU DIG 1-800-553-4344 "It's the Law" NORTHWEST UTILITIES NOTIFICATION CENTER

ROBERT DALE KNIGHT STATE OF WASHINGTON 36606 REGISTERED PROFESSIONAL ENGINEER 07/29/06 EXPIRES 07/29/06

DESIGN & ENGINEERING DIVISION
DESIGN SECTION

TRAFFIC SIGNAL DETAILS
NE 15TH AVENUE AT NE 179TH STREET

proud past, promising future
CLARK COUNTY WASHINGTON

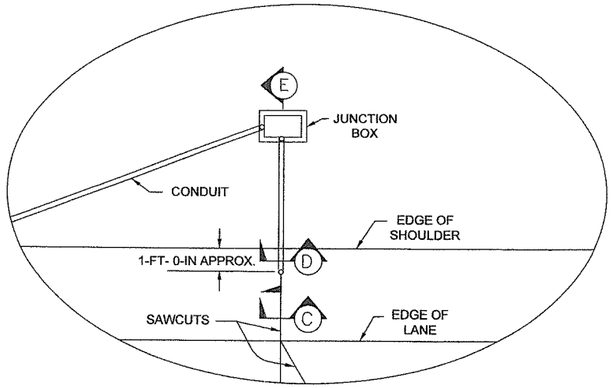

DETAIL "A"

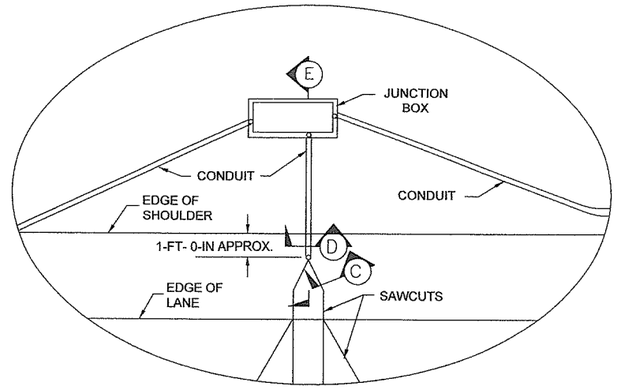

DETAIL "B"

NOTES

1. Fill the conduit trench to the top of the existing or new surfacing with CSTC, sand or controlled density fill. See "Standard Specifications" Section 2-09.3(1)E.
2. Minor Regional variation is allowed in the soft pocket closure. Consult with the Engineer or see the Contract for additional requirements.
3. Conductors shall be snug to the bottom of the sawcut. High temperature backer rod shall be snug to the conductors.

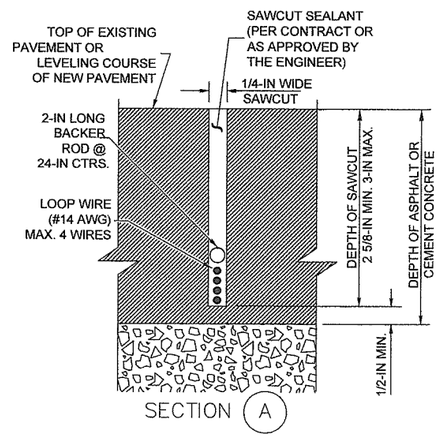

SECTION A

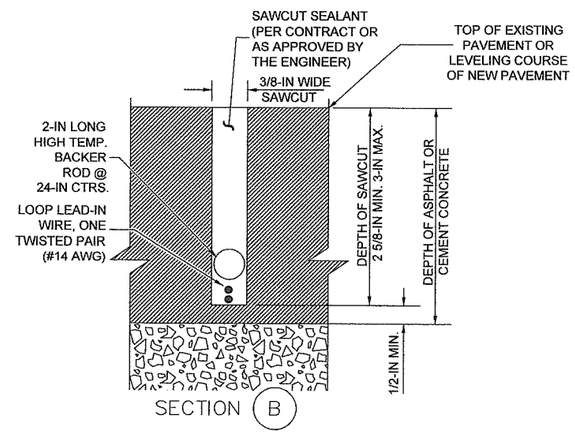

SECTION B

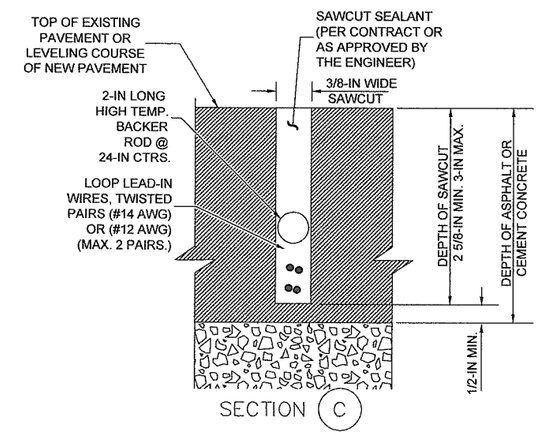

SECTION C

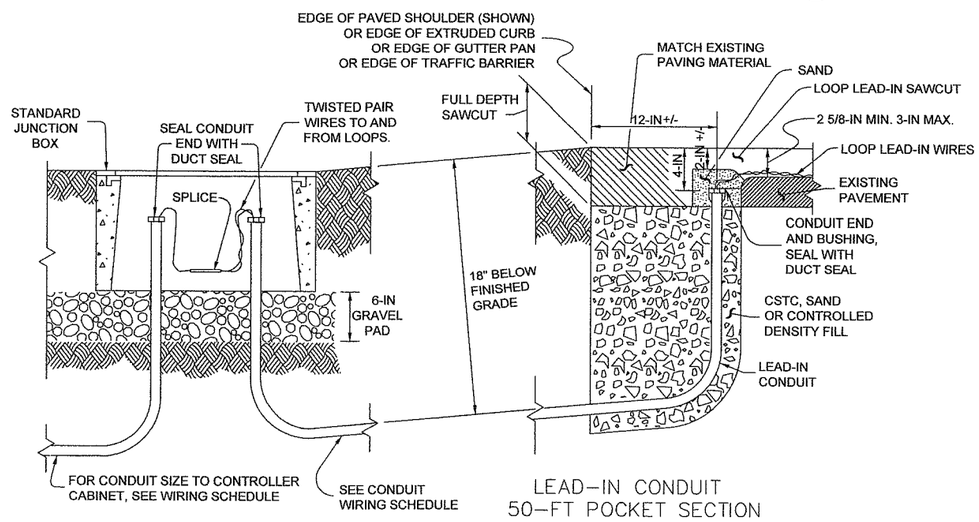

JUNCTION BOX PLACEMENT

LEAD-IN CONDUIT 50-FT POCKET SECTION

SECTION E

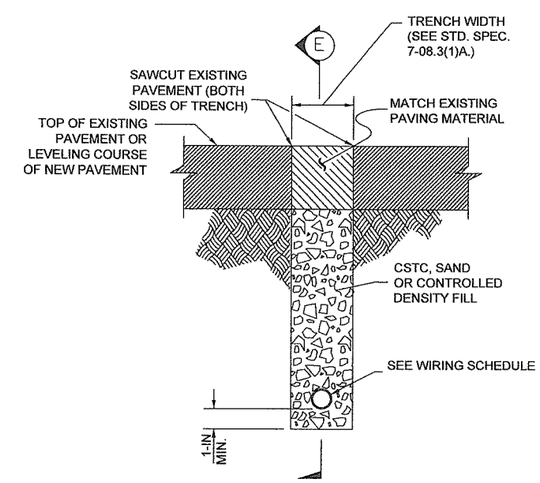

SECTION D

DESIGNED RDK
DRAWN RDK
CRP 382822
HOR. NA
VERT. NA
DATE 1/11/06
DWG: SIG DET 1
SHEET 71 OF

CALL 48 HOURS BEFORE YOU DIG
1-800-553-4344
"It's the Law"
NORTHWEST UTILITIES NOTIFICATION CENTER

DALE R. LUCE
STATE OF WASHINGTON
REGISTERED PROFESSIONAL ENGINEER
1/12/06
EXPIRES 07/29/06

DESIGN & ENGINEERING DIVISION
DESIGN SECTION

TRAFFIC SIGNAL DETAILS
NE 15TH AVENUE AT NE 179TH STREET

proud past, promising future
CLARK COUNTY
WASHINGTON

r:\tdc\Dwings\Projects\CIP\NE 15th Ave\Final-SIG DET 1.DWG, FULL SIZE 2, 1/11/2006 11:48:23 AM, lkwgr

TRAFFIC SIGNAL WIRING SCHEDULE

RUN NO.	CONDUIT OR ENCLOSURE	TRAFFIC SIGNAL HEADS	PEDESTRIAN SIGNAL HEADS	DETECTION INDUCTIVE	DETECTION PEDESTRIAN	ILLUMINATION	OPTICAL PRE-EMPTION	SIGNAL SYSTEM POWER	RUN NO.
24	3-IN RM	EMPTY CONDUIT FOR FUTURE INTERCONNECT AND WIRING							24
25	3-IN PVC	EMPTY CONDUIT FOR FUTURE INTERCONNECT AND WIRING							25

Conduit shall be constructed in accordance with Section 8-20.3(5) of the Specifications, including capping all ends inside J-boxes. **The Contractor shall not glue PVC caps on PVC Conduit.**

LEGEND

- Type III signal standard with terminal cabinet
- Type IV luminaire standard with terminal cabinet
- Type I signal standard with terminal cabinet
- P-1 controller cabinet with Type I electrical service
- Type I electrical junction box
- Type II electrical junction box
- Type III electrical junction box
- Arrow traffic signal display head
- Conventional traffic signal display head
- Pedestrian signal display
- Optical preemption detector
- Mast arm mounted sign
- Capped tenon
- CPU power pole
- Rigid metal conduit
- Rigid polyvinyl chloride (PVC) conduit
- Signal standard number
- Construction note
- Wire note

SCALE IN FEET

30 0 30 60

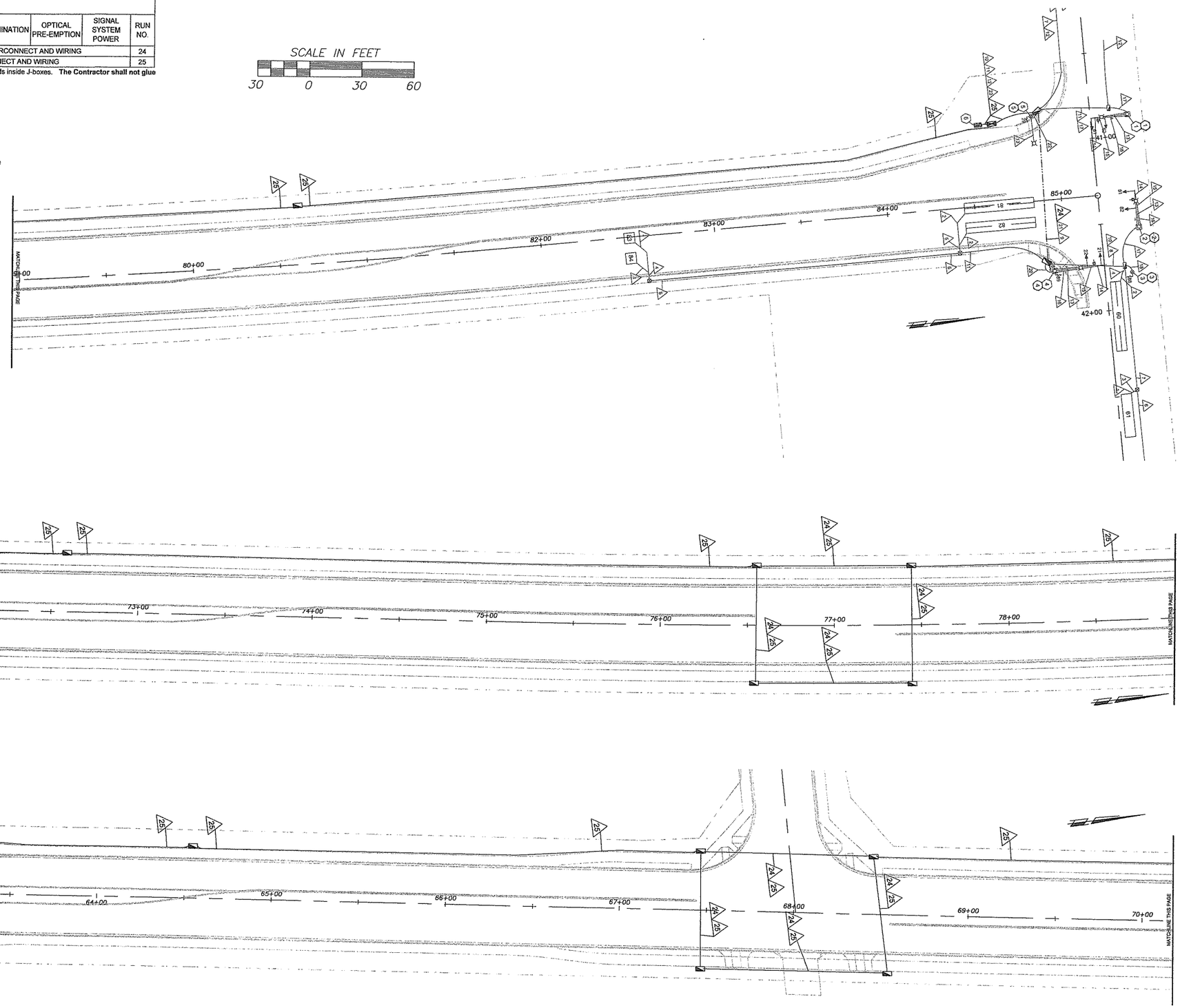

DESIGNED RDK
DRAWN RDK
CRP 382822
HOR. 30-FT
VERT.
DATE 1/11/06
DWG. Interconnect
SHEET 72 OF

CALL 48 HOURS BEFORE YOU DIG
1-800-553-4344
"It's the Law"
NORTHWEST UTILITIES NOTIFICATION CENTER

ROBERT DALE KITTO
STATE OF WASHINGTON
INTERNATIONAL ASSOCIATION OF ELECTRICAL INSPECTORS
EXPIRES 07/29/06

DESIGN & ENGINEERING DIVISION
DESIGN SECTION

TRAFFIC SIGNAL INTERCONNECT CONDUIT PLAN
NE 15TH AVENUE AT NE 179TH STREET

proud past, promising future

CLARK COUNTY
WASHINGTON

TRAFFIC SIGNAL WIRING SCHEDULE

RUN NO.	CONDUIT OR ENCLOSURE	TRAFFIC SIGNAL HEADS	PEDESTRIAN SIGNAL HEADS	DETECTION INDUCTIVE	DETECTION PEDESTRIAN	ILLUMINATION	OPTICAL PRE-EMPTION	SIGNAL SYSTEM POWER	RUN NO.
24	3-IN RM	EMPTY CONDUIT FOR FUTURE INTERCONNECT AND WIRING							24
25	3-IN PVC	EMPTY CONDUIT FOR FUTURE INTERCONNECT AND WIRING							25

Conduit shall be constructed in accordance with Section 8-20.3(5) of the Specifications, including capping all ends inside J-boxes. **The Contractor shall not glue PVC caps on PVC Conduit.**

LEGEND

- Type III signal standard with terminal cabinet
- Type IV luminaire standard with terminal cabinet
- Type I signal standard with terminal cabinet
- P-1 controller cabinet with Type I electrical service
- Type I electrical junction box
- Type II electrical junction box
- Type III electrical junction box
- Arrow traffic signal display head
- Conventional traffic signal display head
- Pedestrian signal display
- Optical preemption detector
- Mast arm mounted sign
- Capped tenon
- CPU power pole
- Rigid metal conduit
- Rigid polyvinyl chloride (PVC) conduit
- Signal standard number
- Construction note
- Wire note

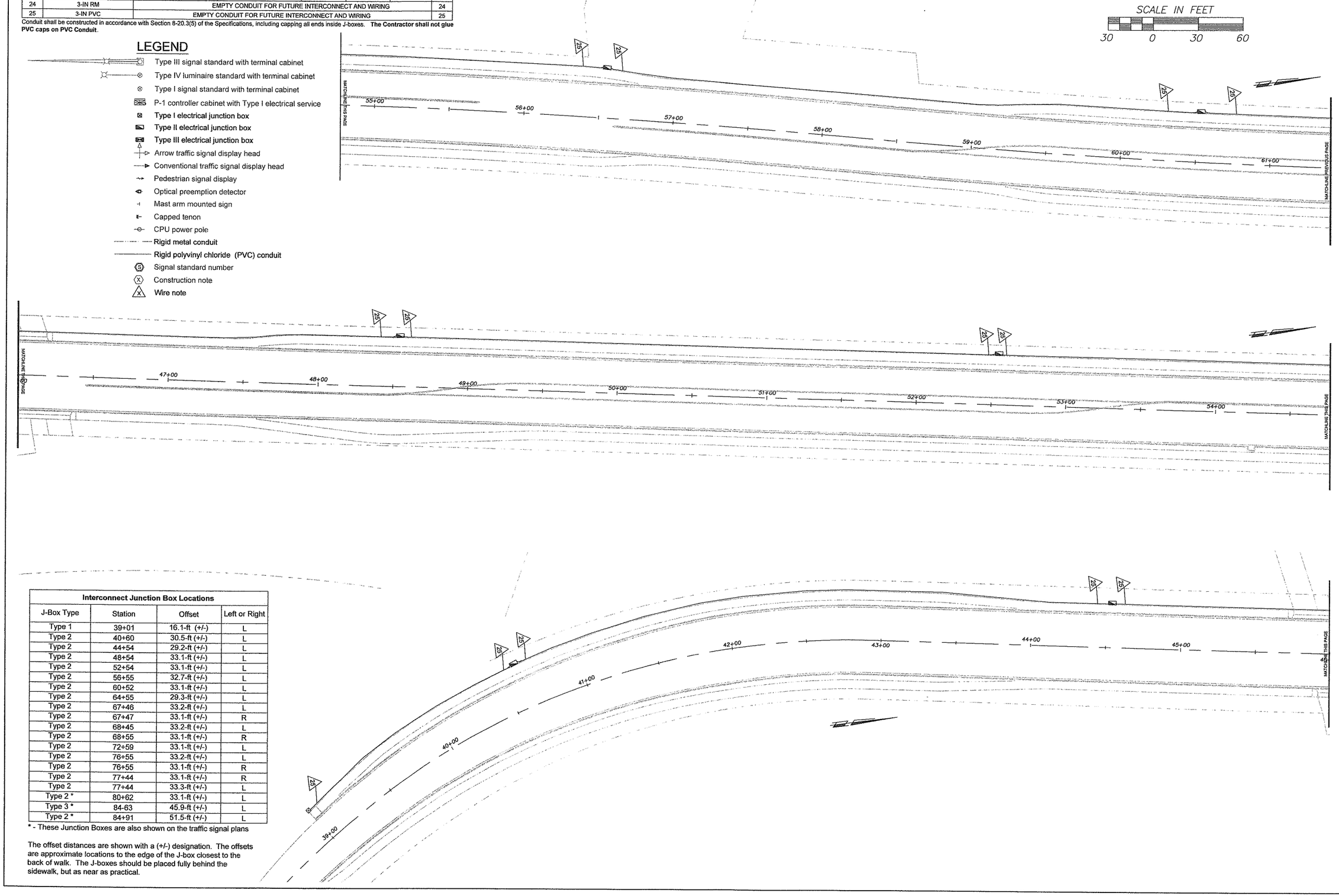

Interconnect Junction Box Locations

J-Box Type	Station	Offset	Left or Right
Type 1	39+01	16.1-ft (+/-)	L
Type 2	40+60	30.5-ft (+/-)	L
Type 2	44+54	29.2-ft (+/-)	L
Type 2	48+54	33.1-ft (+/-)	L
Type 2	52+54	33.1-ft (+/-)	L
Type 2	56+55	32.7-ft (+/-)	L
Type 2	60+52	33.1-ft (+/-)	L
Type 2	64+55	29.3-ft (+/-)	L
Type 2	67+46	33.2-ft (+/-)	L
Type 2	67+47	33.1-ft (+/-)	R
Type 2	68+45	33.2-ft (+/-)	L
Type 2	68+55	33.1-ft (+/-)	R
Type 2	72+59	33.1-ft (+/-)	L
Type 2	76+55	33.2-ft (+/-)	L
Type 2	76+55	33.1-ft (+/-)	R
Type 2	77+44	33.1-ft (+/-)	R
Type 2	77+44	33.3-ft (+/-)	L
Type 2 *	80+62	33.1-ft (+/-)	L
Type 3 *	84-63	45.9-ft (+/-)	L
Type 2 *	84+91	51.5-ft (+/-)	L

* - These Junction Boxes are also shown on the traffic signal plans

The offset distances are shown with a (+/-) designation. The offsets are approximate locations to the edge of the J-box closest to the back of walk. The J-boxes should be placed fully behind the sidewalk, but as near as practical.

DESIGNED	RDK
DRAWN	RDK
CRP	382822
HOR.	30-FT
VERT.	
DATE	1/11/06
DWG	INTERCONNECT
SHEET	73 OF

CALL 48 HOURS BEFORE YOU DIG 1-800-553-4344 "It's the Law" NORTHWEST UTILITIES NOTIFICATION CENTER

ROBERT DALE ELLIG STATE OF WASHINGTON REGISTERED PROFESSIONAL ENGINEER
EXPIRES 07/29/06

DESIGN & ENGINEERING DIVISION
DESIGN SECTION

TRAFFIC SIGNAL INTERCONNECT CONDUIT PLAN
NE 15TH AVENUE AT NE 179TH STREET

proud past, promising future

CLARK COUNTY WASHINGTON

H:\Rod\Drawings\Projects\CRPA\NE 15th Ave\50 percent base\Interconnect.dwg, Full-Size-2, 1/12/2006 11:33:12 AM, Marg

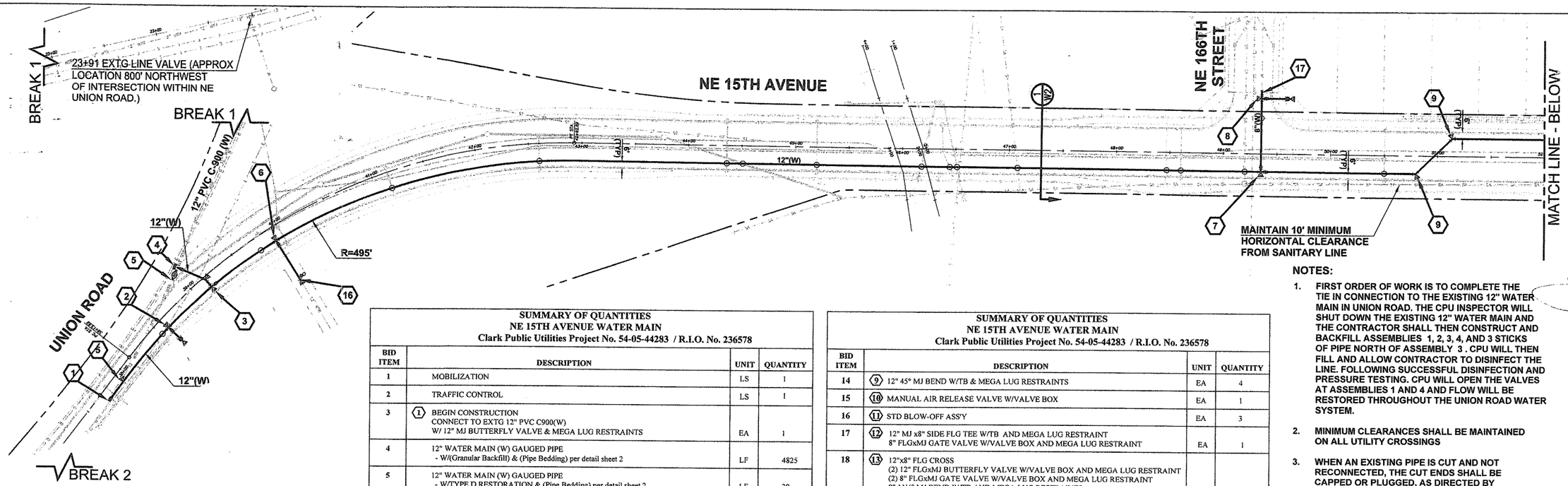

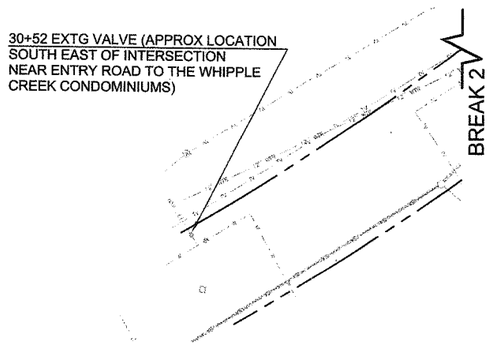

○ UTILITY CROSSING
COORDINATE WITH CORRESPONDING AGENCY AS NECESSARY. MAINTAIN MINIMUM CLEARANCES

SUMMARY OF QUANTITIES
NE 15TH AVENUE WATER MAIN
Clark Public Utilities Project No. 54-05-44283 / R.I.O. No. 236578

BID ITEM	DESCRIPTION	UNIT	QUANTITY
1	MOBILIZATION	LS	1
2	TRAFFIC CONTROL	LS	1
3	(1) BEGIN CONSTRUCTION CONNECT TO EXTG 12" PVC C900(W) W/ 12" MJ BUTTERFLY VALVE & MEGA LUG RESTRAINTS	EA	1
4	12" WATER MAIN (W) GAUGED PIPE - W/(Granular Backfill) & (Pipe Bedding) per detail sheet 2	LF	4825
5	12" WATER MAIN (W) GAUGED PIPE - W/TYPE D RESTORATION & (Pipe Bedding) per detail sheet 2	LF	30
6	8" WATER MAIN (W) GAUGED PIPE w/(Granular Backfill) & (Pipe Bedding) per detail sheet 2	LF	330
7	(2) 12" MJx 6" SIDE FLG TEE W/TB & MEGA LUG RESTRAINTS 6" FLGxMJ GATE VALVE W/VALVE BOX & MEGA LUG RESTRAINTS STD FIRE HYDRANT ASSEMBLY LOCATE HYDRANT AS DIRECTED BY CPU INSPECTOR W/ BLUE RAISED PAVEMENT MARKER PLACED @ PAINTED CENTERLINE	EA	3
8	(3) 12" FLG TEE W/TB & MEGA LUG RESTRAINTS 12" FLGxMJ BUTTERFLY VALVE W/VALVE BOX AND MEGA LUG RESTRAINTS (2) 12" FLGxMJ ADAPTER W/MEGA LUG RESTRAINT 12" 22½° MJ BEND W/TB AND MEGA LUG RESTRAINTS	EA	1
9	(4) CONNECT TO EXTG 12" PVC C900(W) W/ 12" FLG TEE W/TB 12" BLIND FLANGE W/PRECAST TB 12" FLGxMJ BUTTERFLY VALVE W/VALVE BOX AND MEGA LUG RESTRAINT 12" FLGxMJ ADAPTER W/MEGA LUG RESTRAINT 12" FLGxMJ LONG PATTERN SLEEVE W/MEGA LUG RESTRAINT	EA	1
10	(5) FOLLOWING SATISFACTORY TESTING, DISINFECTION & ACCEPTANCE CUT, CAP AND BLOCK EXTG 12" PVC C900	EA	2
11	(6) 12" MJ x SIDE FLG TEE W/TB AND MEGA LUG RESTRAINTS 12" FLGxMJ BUTTERFLY VALVE W/VALVE BOX AND MEGA LUG RESTRAINTS	EA	1
12	(7) 12"x8" FLG TEE W/TB 12" FLGxMJ BUTTERFLY VALVE W/VALVE BOX AND MEGA LUG RESTRAINTS 12" FLGxMJ ADAPTER W/MEGA LUG RESTRAINTS 8" FLGxMJ GATE VALVE W/VALVE BOX & MEGA LUG RESTRAINTS	EA	3
13	(8) 8" MJx 6" SIDE FLG TEE W/TB & MEGA LUG RESTRAINTS 6" FLGxMJ GATE VALVE W/VALVE BOX & MEGA LUG RESTRAINTS STD FIRE HYDRANT ASSEMBLY LOCATE HYDRANT AS DIRECTED BY CPU INSPECTOR W/ BLUE RAISED PAVEMENT MARKER PLACED @ PAINTED CENTERLINE	EA	2

SUMMARY OF QUANTITIES
NE 15TH AVENUE WATER MAIN
Clark Public Utilities Project No. 54-05-44283 / R.I.O. No. 236578

BID ITEM	DESCRIPTION	UNIT	QUANTITY
14	(9) 12" 45° MJ BEND W/TB & MEGA LUG RESTRAINTS	EA	4
15	(10) MANUAL AIR RELEASE VALVE W/VALVE BOX	EA	1
16	(11) STD BLOW-OFF ASS'Y	EA	3
17	(12) 12" MJ x8" SIDE FLG TEE W/TB AND MEGA LUG RESTRAINT 8" FLGxMJ GATE VALVE W/VALVE BOX AND MEGA LUG RESTRAINT	EA	1
18	(13) 12"x8" FLG CROSS (2) 12" FLGxMJ BUTTERFLY VALVE W/VALVE BOX AND MEGA LUG RESTRAINT (2) 8" FLGxMJ GATE VALVE W/VALVE BOX AND MEGA LUG RESTRAINT 8" 11¼° MJ BEND W/TB AND MEGA LUG RESTRAINTS	EA	1
19	(14) CONNECT TO EXTG 8" PVC C900 W/ 8" FLG TEE W/TB & MEGA LUG RESTRAINTS (CUT INTO EXTG 8") (2) 8" FLGxMJ GATE VALVE W/VALVE BOX AND MEGA LUG RESTRAINT 8" MJ LONG PATTERN SLEEVE W/ MEGA LUG RESTRAINTS 12"x8" FLG REDUCER 12" FLGxMJ BUTTERFLY VALVE W/VALVE BOX AND MEGA LUG RESTRAINT	EA	1
20	(15) PLANE AND OVERLAY 15' EACH SIDE OF WATER LINE ACROSS INTERSECTION AS DIRECTED BY CLARK COUNTY INSPECTOR	EA	1
21	(16) STD BLOW-OFF ASS'Y AND TEMPORARY CONSTRUCTION BLOCKING FOLLOWING SATISFACTORY TESTING, DISINFECTION & ACCEPTANCE OF NEW MAIN REMOVE BLOW-OFF ASS'YS AND BLOCKING CONNECT TO EXTG 12" PVC C200 W/12" MJ LONG PATTERN SLEEVE AND MEGA LUG RESTRAINTS	EA	1
22	(17) FOLLOWING SATISFACTORY TESTING, DISINFECTION & ACCEPTANCE OF NEW MAIN REMOVE EXTG BLOW-OFF ASS'YS CONNECT TO EXTG 8" PVC C900 W/8" MJ LONG PATTERN SLEEVE AND MEGA LUG RESTRAINTS	EA	4
23	(18) 12"x6" FLG TEE W/TB 12" FLGxMJ BUTTERFLY VALVE W/VALVE BOX AND MEGA LUG RESTRAINT 12" FLGxMJ ADAPTER W/MEGA LUG RESTRAINT 6" FLGxMJ GATE VALVE W/VALVE BOX AND MEGA LUG RESTRAINT STD FIRE HYDRANT ASSEMBLY LOCATE HYDRANT AS DIRECTED BY CPU INSPECTOR W/ BLUE RAISED PAVEMENT MARKER PLACED @ PAINTED CENTERLINE	EA	1

EXTG LINETYPE LEGEND

EXTG R/W	
EXTG LOT LINE	
EXTG EDGE OF PAVEMENT	
EXTG WATER PIPE	
EXTG 12" WATER PIPE	
EXTG SANITARY SEWER PIPE	
EXTG ELECTRIC LINE	
EXTG GAS LINE	
EXTG STM PIPE	

NOTES:

1. FIRST ORDER OF WORK IS TO COMPLETE THE TIE IN CONNECTION TO THE EXISTING 12" WATER MAIN IN UNION ROAD. THE CPU INSPECTOR WILL SHUT DOWN THE EXISTING 12" WATER MAIN AND THE CONTRACTOR SHALL THEN CONSTRUCT AND BACKFILL ASSEMBLIES 1, 2, 3, 4, AND 3 STICKS OF PIPE NORTH OF ASSEMBLY 3 . CPU WILL THEN FILL AND ALLOW CONTRACTOR TO DISINFECT THE LINE. FOLLOWING SUCCESSFUL DISINFECTION AND PRESSURE TESTING. CPU WILL OPEN THE VALVES AT ASSEMBLIES 1 AND 4 AND FLOW WILL BE RESTORED THROUGHOUT THE UNION ROAD WATER SYSTEM.
2. MINIMUM CLEARANCES SHALL BE MAINTAINED ON ALL UTILITY CROSSINGS
3. WHEN AN EXISTING PIPE IS CUT AND NOT RECONNECTED, THE CUT ENDS SHALL BE CAPPED OR PLUGGED, AS DIRECTED BY THE INSPECTOR. THIS SHALL BE INCIDENTAL TO THE SCOPE OF WORK AND CONTRACT PRICE.
4. ALLOWABLE PIPE MATERIALS ARE PVC C-900 PC 150 OR DIP PRESSURE CLASS 350, UNLESS OTHERWISE SPECIFIED ON THE PLANS. SEE SPECS.
5. PROPOSED ROAD ALIGNMENT PER CLARK COUNTY AND JACOBS CIVIL INC. SANITARY SEWER PER HAZEL DELL SEWER DISTRICT AND KENEDY/JENKS CONSULTANTS. SURVEY PER CLARK COUNTY.

FIRE HYDRANTS

1. 6" WATER PIPE LEADING TO FIRE HYDRANTS SHALL BE DIP AND SHALL BE ONE CONTINUOUS PIECE OF PIPE. IF THE RUN IS LONGER THAN ONE PIECE OF PIPE, THEN ALL PIPE JOINTS SHALL BE MECHANICALLY RESTRAINED WITH "FIELD-LOK" GASKETS OR OTHER CPU APPROVED RESTRAINTS.
   FIRE HYDRANTS MUST BE SET A MINIMUM OF 2' BEHIND FACE OF CURB.

HORIZONTAL INSTALLATION

1. NO UNRESTRAINED WATER MAIN PIPE JOINTS WILL BE ALLOWED WITHIN 12' OF ANY FITTING, VALVE OR MJ RESTRAINT. NINETY DEGREE (90°) BENDS WILL REQUIRE ONE FULL STICK OF PIPE ON BOTH SIDES OF SAID BEND.

VERTICAL INSTALLATION

1. DIP SHALL BE USED IN ANY LOCATIONS REQUIRING VERTICAL BENDS. ALL VERTICAL BENDS WILL REQUIRE MEGA LUG RESTRAINTS OR OTHER CPU APPROVED RESTRAINTS AT THE MJ FITTINGS. IN ADDITION, NO UNRESTRAINED PIPE JOINTS WILL BE ALLOWED WITHIN A PRE-DETERMINED DISTANCE FROM THE BENDS. THIS DISTANCE SHALL BE REFERRED TO AS THE "RESTRAINED LENGTH" AND SHALL BE SPECIFIED ON THE PLAN. IF THE RESTRAINED LENGTH IS NOT SPECIFIED, THE CONTRACTOR SHALL NOT INSTALL THE VERTICAL BENDS UNTIL CPU APPROVES THE REQUIRED RESTRAINED LENGTH.

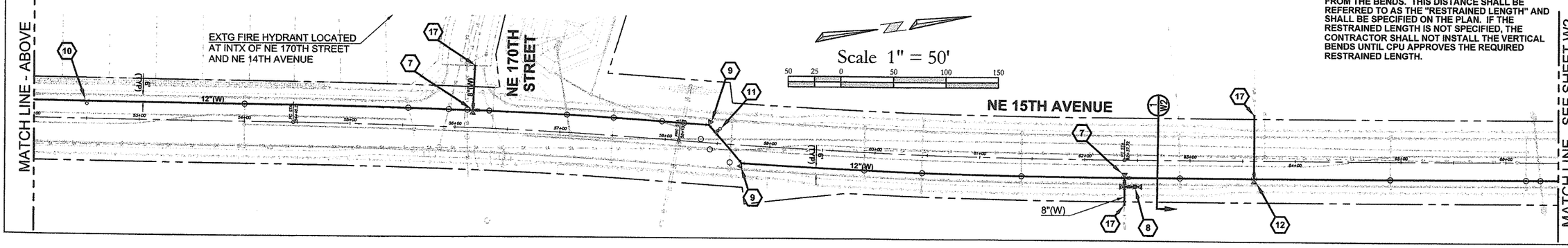

DESIGNED	JBA
DRAWN	JBA
CRP	
HOR.	1"=50'
VERT.	NA
DATE	OCT 2005
DWG:	
SHEET	W1 OF W3

CALL 48 HOURS BEFORE YOU DIG 1-800-424-5555 "It's the Law" NORTHWEST UTILITIES NOTIFICATION CENTER

SHAWN G. MOORE STATE OF WASHINGTON 25067 REGISTERED PROFESSIONAL ENGINEER 10/28/05 EXPIRES: APRIL 30, 2006

DESIGN & ENGINEERING DIVISION
DESIGN SECTION
NE 15TH AVENUE WATER MAIN (NE UNION ROAD TO NE 179TH STREET)

HOPPER DENNIS ELLISON P.L.L.C.
ENGINEERS · PLANNERS
LANDSCAPE ARCHITECTS
314 W. 15th Street
Vancouver, WA 98660-2927
(360) 695-3488
(503) 924-4005
FAX (360) 695-8767
Internet: www.hdpengineers.com

E:\projects\2275_5\Cad\Final\dwg\Prod\2275_5c01.dwg, 1/3/2006 11:09:29 AM, brr

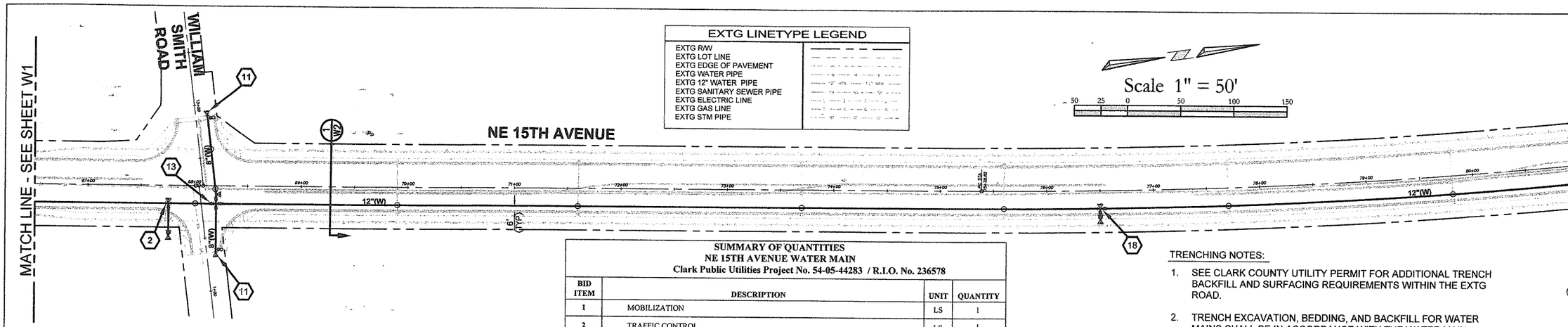

EXTG LINETYPE LEGEND
EXTG R/W
EXTG LOT LINE
EXTG EDGE OF PAVEMENT
EXTG WATER PIPE
EXTG 12" WATER PIPE
EXTG SANITARY SEWER PIPE
EXTG ELECTRIC LINE
EXTG GAS LINE
EXTG STM PIPE

Scale 1" = 50'

50 25 0 50 100 150

MATCH LINE - BELOW

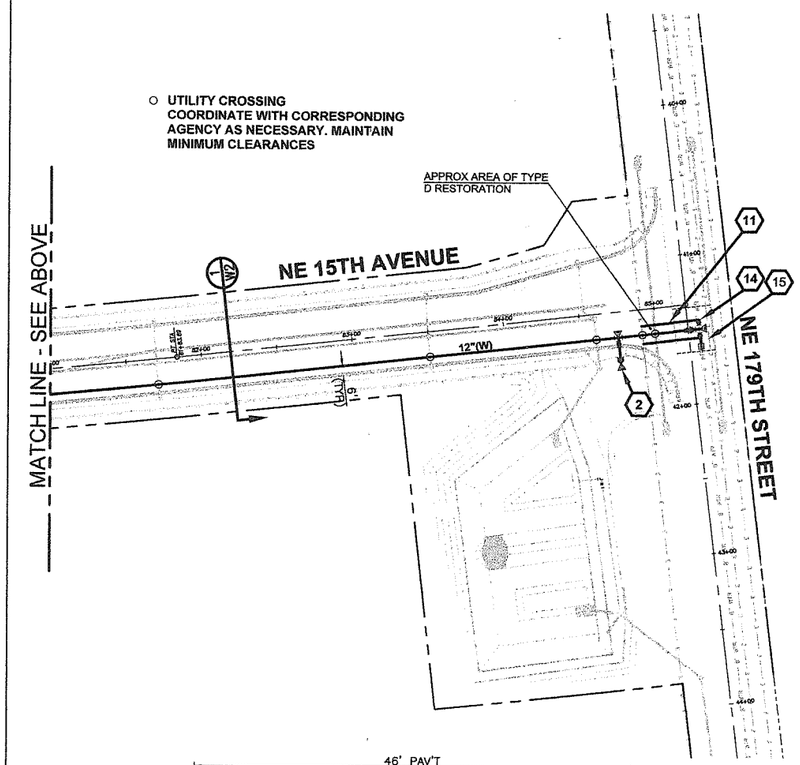

○ UTILITY CROSSING
COORDINATE WITH CORRESPONDING AGENCY AS NECESSARY. MAINTAIN MINIMUM CLEARANCES

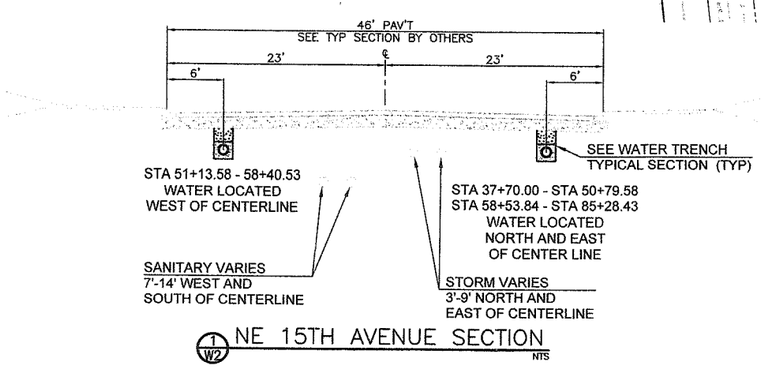

1 W2 NE 15TH AVENUE SECTION
NTS

SUMMARY OF QUANTITIES
NE 15TH AVENUE WATER MAIN
Clark Public Utilities Project No. 54-05-44283 / R.I.O. No. 236578

BID ITEM	DESCRIPTION	UNIT	QUANTITY
1	MOBILIZATION	LS	1
2	TRAFFIC CONTROL	LS	1
3	(1) BEGIN CONSTRUCTION CONNECT TO EXTG 12" PVC C900(W) W/ 12" MJ BUTTERFLY VALVE & MEGA LUG RESTRAINTS	EA	1
4	12" WATER MAIN (W) GAUGED PIPE - W/(Granular Backfill) & (Pipe Bedding) per detail sheet 2	LF	4825
5	12" WATER MAIN (W) GAUGED PIPE - W/TYPE D RESTORATION & (Pipe Bedding) per detail sheet 2	LF	30
6	8" WATER MAIN (W) GAUGED PIPE w/(Granular Backfill) & (Pipe Bedding) per detail sheet 2	LF	330
7	(2) 12" MJx 6" SIDE FLG TEE W/TB & MEGA LUG RESTRAINTS 6" FLGxMJ GATE VALVE W/VALVE BOX & MEGA LUG RESTRAINTS STD FIRE HYDRANT ASSEMBLY LOCATE HYDRANT AS DIRECTED BY CPU INSPECTOR W/ BLUE RAISED PAVEMENT MARKER PLACED @ PAINTED CENTERLINE	EA	3
8	(3) 12" FLG TEE W/TB & MEGA LUG RESTRAINTS 12" FLGxMJ BUTTERFLY VALVE W/VALVE BOX AND MEGA LUG RESTRAINTS (2) 12" FLGxMJ ADAPTER W/MEGA LUG RESTRAINT 12" 22½° MJ BEND W/TB AND MEGA LUG RESTRAINTS	EA	1
9	(4) CONNECT TO EXTG 12" PVC C900(W) W/ 12" FLG TEE W/TB 12" BLIND FLANGE W/PRECAST TB 12"FLGxMJ BUTTERFLY VALVE W/VALVE BOX AND MEGA LUG RESTRAINT 12" FLGxMJ ADAPTER W/MEGA LUG RESTRAINT 12" FLGxMJ LONG PATTERN SLEEVE W/MEGA LUG RESTRAINT	EA	1
10	(5) FOLLOWING SATISFACTORY TESTING, DISINFECTION & ACCEPTANCE CUT, CAP AND BLOCK EXTG 12" PVC C900	EA	2
11	(6) 12" MJ x SIDE FLG TEE W/TB AND MEGA LUG RESTRAINTS 12" FLGxMJ BUTTERFLY VALVE W/VALVE BOX AND MEGA LUG RESTRAINTS	EA	1
12	(7) 12"x8" FLG TEE W/TB 12" FLGxMJ BUTTERFLY VALVE W/VALVE BOX AND MEGA LUG RESTRAINTS 12" FLGxMJ ADAPTER W/MEGA LUG RESTRAINTS 8" FLGxMJ GATE VALVE W/VALVE BOX & MEGA LUG RESTRAINTS	EA	3
13	(8) 8" MJx 6" SIDE FLG TEE W/TB & MEGA LUG RESTRAINTS 6" FLGxMJ GATE VALVE W/VALVE BOX & MEGA LUG RESTRAINTS STD FIRE HYDRANT ASSEMBLY LOCATE HYDRANT AS DIRECTED BY CPU INSPECTOR W/ BLUE RAISED PAVEMENT MARKER PLACED @ PAINTED CENTERLINE	EA	2
14	(9) 12" 45° MJ BEND W/TB & MEGA LUG RESTRAINTS	EA	4
15	(10) MANUAL AIR RELEASE VALVE W/VALVE BOX	EA	1
16	(11) STD BLOW-OFF ASS'Y	EA	3
17	(12) 12" MJ x8" SIDE FLG TEE W/TB AND MEGA LUG RESTRAINT 8" FLGxMJ GATE VALVE W/VALVE BOX AND MEGA LUG RESTRAINT	EA	1
18	(13) 12"x8" FLG CROSS (2) 12" FLGxMJ BUTTERFLY VALVE W/VALVE BOX AND MEGA LUG RESTRAINT (2) 8" FLGxMJ GATE VALVE W/VALVE BOX AND MEGA LUG RESTRAINT 8" 11½° MJ BEND W/TB AND MEGA LUG RESTRAINTS	EA	1
19	(14) CONNECT TO EXTG 8" PVC C900 W/ 8" FLG TEE W/TB & MEGA LUG RESTRAINTS (CUT INTO EXTG 8") (2) 8" FLGxMJ GATE VALVE W/VALVE BOX AND MEGA LUG RESTRAINT 8" MJ LONG PATTERN SLEEVE W/ MEGA LUG RESTRAINTS 12"x8" FLG REDUCER 12" FLGxMJ BUTTERFLY VALVE W/VALVE BOX AND MEGA LUG RESTRAINT	EA	1
20	(15) PLANE AND OVERLAY 15' EACH SIDE OF WATER LINE ACROSS INTERSECTION AS DIRECTED BY CLARK COUNTY INSPECTOR	EA	1
21	(16) STD BLOW-OFF ASS'Y AND TEMPORARY CONSTRUCTION BLOCKING FOLLOWING SATISFACTORY TESTING, DISINFECTION & ACCEPTANCE OF NEW MAIN REMOVE BLOW-OFF ASS'YS AND BLOCKING CONNECT TO EXTG 12" PVC C200 W/12" MJ LONG PATTERN SLEEVE AND MEGA LUG RESTRAINTS	EA	1
22	(17) FOLLOWING SATISFACTORY TESTING, DISINFECTION & ACCEPTANCE OF NEW MAIN REMOVE EXTG BLOW-OFF ASS'YS CONNECT TO EXTG 8" PVC C900 W/8" MJ LONG PATTERN SLEEVE AND MEGA LUG RESTRAINTS	EA	4

TRENCHING NOTES:

1. SEE CLARK COUNTY UTILITY PERMIT FOR ADDITIONAL TRENCH BACKFILL AND SURFACING REQUIREMENTS WITHIN THE EXTG ROAD.
2. TRENCH EXCAVATION, BEDDING, AND BACKFILL FOR WATER MAINS SHALL BE IN ACCORDANCE WITH THE WATER MAIN TECHNICAL SPECIFICATIONS.
3. IN THE TRENCH ZONE, USE METHOD C COMPACTION PER SECTION 2-03.3(14).

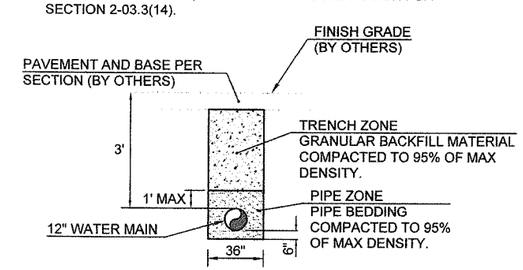

WATER TRENCH TYPICAL SECTION

NOTES:

1. FIRST ORDER OF WORK IS TO COMPLETE THE TIE IN CONNECTION TO THE EXISTING 12" WATER MAIN IN UNION ROAD. THE CPU INSPECTOR WILL SHUT DOWN THE EXISTING 12" WATER MAIN AND THE CONTRACTOR SHALL THEN CONSTRUCT AND BACKFILL ASSEMBLIES 1, 2, 3, 4, AND 3 STICKS OF PIPE NORTH OF ASSEMBLY 3 . CPU WILL THEN FILL AND ALLOW CONTRACTOR TO DISINFECT THE LINE. FOLLOWING SUCCESSFUL DISINFECTION AND PRESSURE TESTING. CPU WILL OPEN THE VALVES AT ASSEMBLIES 1 AND 4 AND FLOW WILL BE RESTORED THROUGHOUT THE UNION ROAD WATER SYSTEM.
2. MINIMUM CLEARANCES SHALL BE MAINTAINED ON ALL UTILITY CROSSINGS
3. WHEN AN EXISTING PIPE IS CUT AND NOT RECONNECTED, THE CUT ENDS SHALL BE CAPPED OR PLUGGED, AS DIRECTED BY THE INSPECTOR. THIS SHALL BE INCIDENTAL TO THE SCOPE OF WORK AND CONTRACT PRICE.
4. ALLOWABLE PIPE MATERIALS ARE PVC C-900 PC 150 OR DIP PRESSURE CLASS 350, UNLESS OTHERWISE SPECIFIED ON THE PLANS. SEE SPECS.
5. PROPOSED ROAD ALIGNMENT PER CLARK COUNTY AND JACOBS CIVIL INC. SANITARY SEWER PER HAZEL DELL SEWER DISTRICT AND KENEDY/JENKS CONSULTANTS. SURVEY PER CLARK COUNTY.

FIRE HYDRANTS

1. 6" WATER PIPE LEADING TO FIRE HYDRANTS SHALL BE DIP AND SHALL BE ONE CONTINUOUS PIECE OF PIPE. IF THE RUN IS LONGER THAN ONE PIECE OF PIPE, THEN ALL PIPE JOINTS SHALL BE MECHANICALLY RESTRAINED WITH "FIELD-LOK" GASKETS OR OTHER CPU APPROVED RESTRAINTS.
   FIRE HYDRANTS MUST BE SET A MINIMUM OF 2' BEHIND FACE OF CURB.

HORIZONTAL INSTALLATION

1. NO UNRESTRAINED WATER MAIN PIPE JOINTS WILL BE ALLOWED WITHIN 12' OF ANY FITTING, VALVE OR MJ RESTRAINT. NINETY DEGREE (90°) BENDS WILL REQUIRE ONE FULL STICK OF PIPE ON BOTH SIDES OF SAID BEND.

VERTICAL INSTALLATION

1. DIP SHALL BE USED IN ANY LOCATIONS REQUIRING VERTICAL BENDS. ALL VERTICAL BENDS WILL REQUIRE MEGA LUG RESTRAINTS OR OTHER CPU APPROVED RESTRAINTS AT THE MJ FITTINGS. IN ADDITION, NO UNRESTRAINED PIPE JOINTS WILL BE ALLOWED WITHIN A PRE-DETERMINED DISTANCE FROM THE BENDS. THIS DISTANCE SHALL BE REFERRED TO AS THE "RESTRAINED LENGTH" AND SHALL BE SPECIFIED ON THE PLAN. IF THE RESTRAINED LENGTH IS NOT SPECIFIED, THE CONTRACTOR SHALL NOT INSTALL THE VERTICAL BENDS UNTIL CPU APPROVES THE REQUIRED RESTRAINED LENGTH.

SUMMARY OF QUANTITIES
NE 15TH AVENUE WATER MAIN
Clark Public Utilities Project No. 54-05-44283 / R.I.O. No. 236578

BID ITEM	DESCRIPTION	UNIT	QUANTITY
23	(18) 12"x6" FLG TEE W/TB 12" FLGxMJ BUTTERFLY VALVE W/VALVE BOX AND MEGA LUG RESTRAINT 12" FLGxMJ ADAPTER W/MEGA LUG RESTRAINT 6" FLGxMJ GATE VALVE W/VALVE BOX AND MEGA LUG RESTRAINT STD FIRE HYDRANT ASSEMBLY LOCATE HYDRANT AS DIRECTED BY CPU INSPECTOR W/ BLUE RAISED PAVEMENT MARKER PLACED @ PAINTED CENTERLINE	EA	1

DESIGNED	JBA
DRAWN	JBA
CRP	
HOR.	1"=50'
VERT.	NA
DATE	OCT 2005
DWG:	
SHEET W2	OF W3

CALL 48 HOURS BEFORE YOU DIG
1-800-424-5555
"It's the Law"
NORTHWEST UTILITIES NOTIFICATION CENTER

SHAWN G. MOORE
STATE OF WASHINGTON
38067
REGISTERED PROFESSIONAL ENGINEER
10/22/05
EXPIRES: APRIL 30, 2006

DESIGN & ENGINEERING DIVISION
DESIGN SECTION

NE 15TH AVENUE WATER MAIN
(NE UNION ROAD TO NE 179TH STREET)

HOPPER DENNIS JELLISON P.L.L.C.
ENGINEERS · PLANNERS
LANDSCAPE ARCHITECTS
314 W. 15th Street
Vancouver, WA 98660-2927
(360) 695-3488
(503) 924-4005
FAX (360) 695-8767
Internet: www.hdjengineers.com

E:\projects\2275_5\Cad\Final\dwg\Prod\2275_5c02.dwg, 1/3/2006 11:11:17 AM, brr

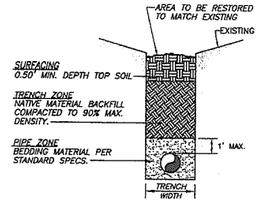

NATIVE BACKFILL –OUTSIDE ROADWAY PRISM–

(TYPE 'A' RESTORATION)

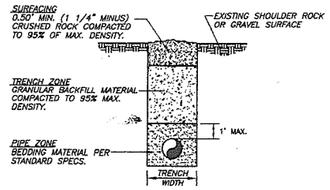

ROADWAY SHOULDERS, GRAVEL SURFACE

(TYPE 'B' RESTORATION)

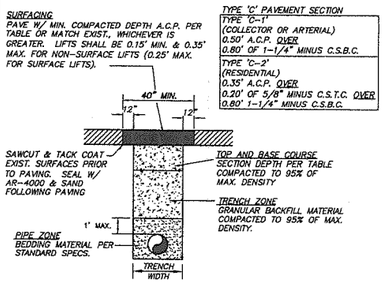

ASPHALT CONCRETE PAVEMENT

(TYPE 'C-1' & 'C-2' RESTORATION)

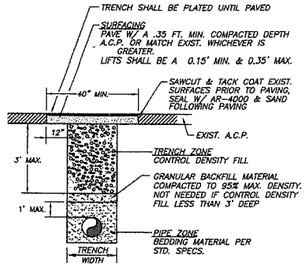

CONTROL DENSITY FILL – A.C.P.

(TYPE 'D' RESTORATION)

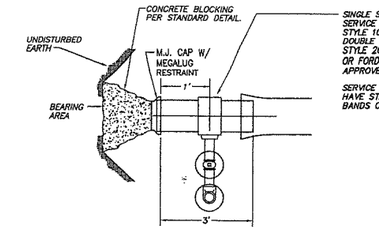

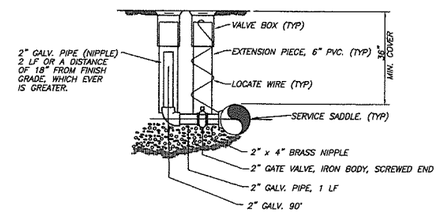

STANDARD BLOW-OFF ASSEMBLY (PERMANENT)

EROSION CONTROL NOTES:

1. CONSTRUCTION EROSION CONTROL SHALL BE AS REQUIRED AND CONFORMING WITH THE CLARK COUNTY DRAINAGE AND EROSION CONTROL ORDINANCE. REFER TO THE CLARK COUNTY DEPARTMENT OF PUBLIC WORKS STANDARD EROSION CONTROL DETAILS.

2. ALL EXPOSED SOILS SHALL BE STABILIZED, IN A TIMELY MANNER, BY THE APPLICATION OF BEST MANAGEMENT PRACTICES, INCLUDING BUT NOT LIMITED TO SOD, SEED, OR OTHER VEGETATION, PLASTIC COVERINGS, MULCHING, OR APPLICATON OF CRUSHED AGGREGATE ON THOSE AREAS TO BE PAVED.

3. WHEN EXCAVATION OCCURS IN ROADSIDE DITCHES, EXCAVATE AND KEY INTO DITCH ONE BIOFILTER BAG CHECK DAM PER 100' OF DITCH, OR WHERE NOTED ON THE PLANS. REMOVE SILT WHEN IT IS EVEN WITH THE TOP OF THE CHECK DAM. REPLACE OR ADD BIOFILTER BAGS AS NECESSARY TO PROPERLY FILTER THE STORM WATER.

4. INSTALL BIOFILTER BAGS (POLYESTER FABRIC PILLOW (ASTM-D191 OR EQUAL)FILLED W/ 15-16 LBS. OF WOOD CHIPS) AT EACH INLET. REMOVE SILT AND ADD BIOFILTER BAGS AS NECESSARY TO PROPERLY FILTER STORM WATER.

5. IF SEDIMENT IS TRANSPORTED ONTO THE ROAD SURFACE, THE ROADS SHALL BE CLEANED THOROUGHLY AT THE END OF THE WORKDAY, OR MORE IF NECESSARY. SIGNIFICANT SOIL DEPOSITS SHALL BE REMOVED FROM THE ROAD BY SHOVELING OR SWEEPING.

6. THE LENGTH OF THE TRENCH OPEN AT ONE TIME SHALL BE MINIMIZED AND WHERE CONSISTENT WITH SAFETY AND SPACE CONSIDERATION, EXCAVATED MATERIALS SHALL BE PLACED ON THE UPHILL SIDE OF THE TRENCH.

SERVICE SADDLES:

PROVIDE IRON SERVICE SADDLES WITH NEOPRENE GASKETS CEMENTED IN PLACE AND I.P.S. TAP AS SPECIFIED ON THE CONTRACT DRAWINGS. SADDLES SHALL BE SPECIFICALLY DESIGNED FOR THE TYPE OF PIPE TO WHICH THEY ARE BEING INSTALLED. SERVICE SADDLES ON PVC PIPE SHALL HAVE STAINLESS STEEL BANDS.

1. SADDLES FOR 1" AND 2" SERVICE LINES ON WATER MAINS 8" AND SMALLER SHALL BE "ROMAC 101S" OR APPROVED EQUAL.

2. SADDLES FOR 1" AND 2" SERVICE LINES ON WATER MAINS 10" AND LARGER SHALL BE "ROMAC 202S" OR APPROVED EQUAL.

GENERAL NOTES:

1. ALL CONSTRUCTION MATERIALS AND WORKMANSHIP SHALL CONFORM TO THE CLARK PUBLIC UTILITIES (CPU) WATER CONSTRUCTION SPECIFICATIONS, STANDARD DETAILS AND THE 2004 EDITION OF THE "STANDARD SPECIFICATIONS FOR ROAD AND BRIDGE CONSTRUCTION" PUBLISHED BY WASHINGTON STATE DEPARTMENT OF TRANSPORTATION (WSDOT).

2. A CPU WATER UTILITY INSPECTOR SHALL BE AT THE JOB SITE DURING CONSTRUCTION OF ALL WATER FACILITIES. CONTACT 360-992-8019 TWO WORKING DAYS PRIOR TO COMMENCING WORK.

3. WORK WITHIN COUNTY RIGHT-OF-WAY SHALL CONFORM WITH CLARK COUNTY PUBLIC WORKS UTILITY PERMIT REQUIREMENTS AND DETAILS. WORK WITHIN STATE RIGHT-OF-WAY SHALL CONFORM TO WSDOT UTILITY PERMIT REQUIREMENTS AND DETAILS.

4. WATER MAIN SHALL BE PVC C-900 P.C. 150 OR AS SPECIFIED ON PLANS.

5. VALVE SHALL BE 2" SQUARE OPERATING NUT OR AS SPECIFIED ON PLANS.

6. INSTALL WATER MAIN WITH 3.0 FEET OF MINIMUM COVER UNLESS OTHERWISE NOTED. DEPTH MAY INCREASE AT UTILITY AND CULVERT CROSSINGS. REFER TO NOTE 13.

7. THE LOCATION OF THE UTILITIES SHALL BE VERIFIED IN ADVANCE TO ALLOW FOR ALIGNMENT ADJUSTMENTS. CALL UTILITY LOCATES TWO (2) WORKING DAYS PRIOR TO CONSTRUCTION (1-800-553-4344).

8. A TAPPING COMPANY APPROVED BY CLARK PUBLIC UTILITIES SHALL BE USED TO MAKE ALL TAPS.

9. LOCATE WIRE SHALL BE NON-COATED, NO. 14 GA. SOFT DRAWN SOLID COPPER.

10. DRY CALCIUM HYPO CHLORIDE IN TABLET FORM, FAST DISSOLVING, WITH 65% MIN. AVAILABLE CHLORINE SHALL BE USED TO CHLORINATE ALL NEW MAINS. THE NUMBER OF TABLETS TO BE APPLIED PER 20 FOOT LENGTH OF PIPE SHALL BE AS FOLLOWS:

PIPE SIZE	NUMBER OF TABLETS
4"	2
6"	3
8"	4
10"	6
12"	8

11. ACTUAL ROAD ALIGNMENTS MAY VARY FROM RIGHT-OF-WAY INDICATED. THE CONTRACTOR SHALL VERIFY THE PROPOSED PIPE ALIGNMENT AND REPORT DIFFERENCES TO THE CPU INSPECTOR. ALL ALIGNMENT CHANGES MUST BE APPROVED BY THE CPU INSPECTOR PRIOR TO INSTALLATION.

12. DRIVEWAYS DISTURBED BY CONSTRUCTION SHALL BE RESTORED BY THE CONTRACTOR TO "LIKE" OR BETTER CONDITION. REFER TO PLAN FOR APPROXIMATE LOCATIONS AND TYPES.

13. CONTRACTOR SHALL VERIFY EXISTING UTILITY CULVERTS, CONDUITS AND LINE LOCATION PRIOR TO CONSTRUCTION. DUE TO FIELD CONDITIONS, THE CONTRACTOR SHALL FIELD ADJUST THE VERTICAL AND HORIZONTAL ALIGNMENT OF THE WATER MAIN TO CLEAR THE UTILITY IN CONFLICT AND PROVIDE THE MIN. 3.0 FEET OF COVER AS APPROVED BY THE CPU INSPECTOR. ALL CULVERTS WHICH ARE DISTURBED BY CONSTRUCTION SHALL BE RESTORED BY THE CONTRACTOR IN ACCORDANCE WITH THE SPECIFICATIONS.

14. FENCES DISTURBED BY CONSTRUCTION SHALL BE RESTORED BY THE CONTRACTOR TO "LIKE" OR BETTER CONDITION.

15. CONTRACTOR SHALL VERIFY EXISTING SIGN AND MAILBOX LOCATIONS PRIOR TO CONSTRUCTION. SIGNS & MAILBOXES THAT ARE DISTURBED BY CONSTRUCTION SHALL BE RELOCATED BACK FROM EDGE OF PAVEMENT, 1.0 FEET CLEAR OF WATER MAIN. ANY SIGNS OR MAILBOXES DAMAGED SHALL BE REPAIRED OR REPLACED AS PER THE SPECIFICATIONS.

16. WHENEVER A PIPE IS CUT AND NOT RECONNECTED, THE CUT ENDS SHALL BE CAPPED OR PLUGGED, AS DIRECTED BY THE CPU INSPECTOR.

17. ALL WATER SERVICES, BLOW-OFF ASSEMBLIES, AIR RELEASE VALVES, FIRE HYDRANT ASSEMBLIES, VALVE BOXES AND THRUST BLOCKING SHALL BE INSTALLED PER THE STANDARD SPECIFICATIONS AND DETAILS.

18. THE LOCATIONS OF ALL EXISTING UTILITIES ARE FOR INFORMATIONAL PURPOSES ONLY. MANY LOCATIONS ARE PER SCHEMATIC RECORD DRAWINGS. THE CURRENT AND EXACT LOCATIONS OF FACILITIES MUST BE VERIFIED PRIOR TO CONSTRUCTION. THE CONTRACTOR PERFORMING THE WORK SHALL COMPLY WITH THE PROVISIONS OF FACILITIES AT LEAST 48 BUSINESS DAY HOURS PRIOR TO EXCAVATION. CALL 1-800-553-4344 FOR UTILITITY LOCATE SERVICE.

19. WATER MAINS BEING INSTALLED NEAR TELEPHONE/CABLE COMMUNICATIONS SHALL HAVE A MINIMUM 12" HORIZONTAL AND 6" VERTICAL CLEARANCE.

20. WATER MAINS BEING INSTALLED NEAR UNDERGROUND POWERLINES SHALL HAVE A MINIMUM 12" HORIZONTAL AND 6" VERTICAL CLEARANCE.

21. REQUIRED SEPARATION BETWEEN WATER LINES AND SANITARY SEWER LINES SHALL BE AS FOLLOWS:

HORIZONTAL SEPARATIONS (PARALLEL)
A MINIMUM SEPARATION OF TEN (10) FEET (MEASURED EDGE TO EDGE) BETWEEN SANITARY SEWER LINES AND WATER LINES SHALL BE MAINTAINED WHENEVER POSSIBLE. WHEN CONDITIONS PREVENT THE MINIMUM TEN (10) FOOT HORIZONTAL SEPARATION THE ENGINEER SHALL BE NOTIFIED.

VERTICAL SEPARATION (PERPENDICULAR)
WATER LINES CROSSING SANITARY SEWER LINES SHALL BE LAID ABOVE THE SEWER LINES TO PROVIDE A SEPARATION OF AT LEAST 18" BETWEEN THE INVERT OF THE WATER PIPE AND THE CROWN OF THE SANITARY SEWER PIPE. A LENGTH OF WATER PIPE SHALL BE CENTERED AT THE POINT OF CROSSING AND SHALL BE THE LONGEST STANDARD LENGTH AVAILABLE FROM THE MANUFACTURER.

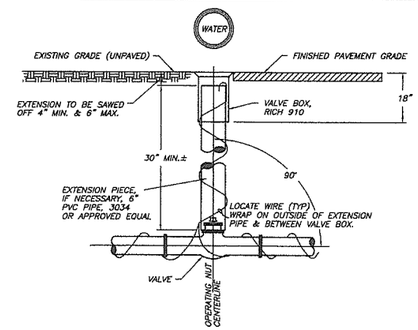

STANDARD VALVE BOX ASSEMBLY

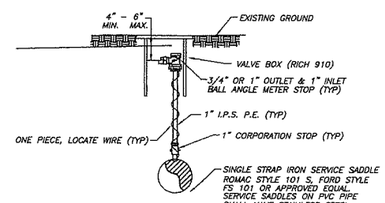

STANDARD MANUAL AIR RELEASE VALVE

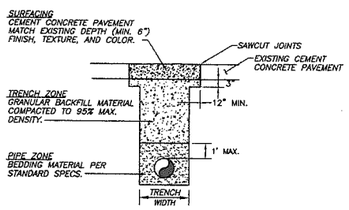

CEMENT CONCRETE PAVEMENT

(TYPE 'E' RESTORATION)

TRENCHING NOTES:

1. SEE CLARK COUNTY OR WSDOT UTILITY PERMIT, WHICHEVER IS APPLICABLE, FOR ADDITIONAL TRENCH BACKFILL AND SURFACING REQUIREMENTS.

2. NATIVE MATERIALS MAY BE SUBSTITUTED FOR IMPORTED GRANULAR MATERIAL PROVIDING IT IS PRE-APPROVED BY THE COUNTY ENGINEER OR AUTHORIZED REPRESENTATIVE.

3. TRENCH EXCAVATION, BEDDING, AND BACKFILL FOR WATER MAINS SHALL BE IN ACCORDANCE WITH SECTION 7-10 OF THE MOST CURRENT STANDARD SPECIFICATIONS. BED PIPE PER SECTION 7-10.3(9) OF THE STANDARD SPECIFICATIONS.

4. IN THE TRENCH ZONE, USE METHOD C COMPACTION PER SECTION 2-03.3(14).

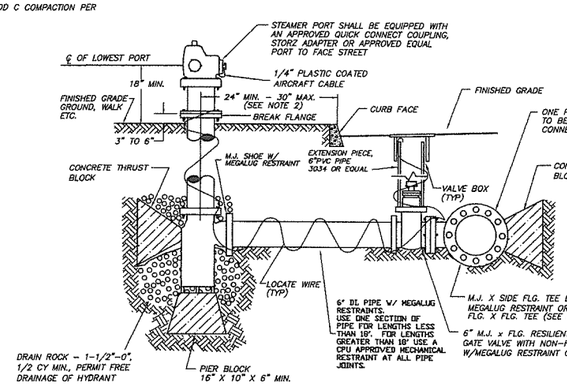

FIRE HYDRANT NOTES:

1. FIRE HYDRANT INSTALLATIONS SHALL BE INSPECTED PRIOR TO BACKFILLING.
2. WHERE HYDRANTS ARE SET BEHIND SIDEWALK, DISTANCE FROM BACK OF SIDEWALK TO HYDRANT C/L SHALL BE 18" MIN., 24" MAX.
3. FIRE HYDRANTS SHALL BE SHOP PAINTED PRIOR TO INSTALLATION W/STANDARD A.W.W.A. GLOSS B, YELLOW

APPROVED HYDRANTS
WATEROUS — WB67-90 AND/OR -250
MUELLER — CENTURION
CLOW — MEDALLION
M&H — 929
KENNEDY — K 81 D

STANDARD FIRE HYDRANT ASSEMBLY

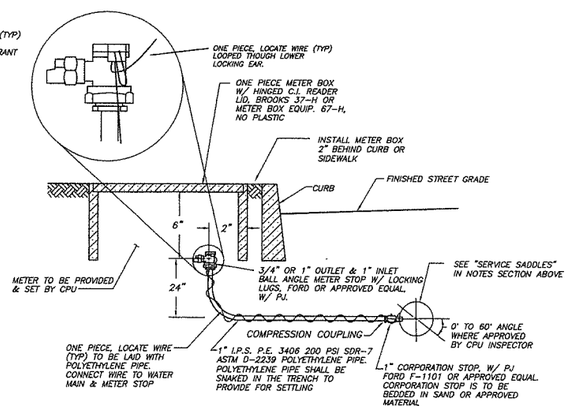

WATER SERVICE & MANUAL AIR RELEASE NOTES:

1. NO CONNECTIONS WILL BE ALLOWED TO AN EXISTING SERVICE PRIOR TO AN APPROVED PURITY TEST. PURITY TEST SHALL PRECEDE PRESSURE TEST.
2. STUB SERVICES SHALL BE PRESSURE TESTED WITH THE MAIN LINE AND BE CAPABLE OF WITH-STANDING THE MAINS TEST PRESSURE.
3. ALL COMPRESSION FITTINGS TO HAVE STAINLESS STEEL INSERTS.

STANDARD 3/4" & 1" WATER SERVICE

PIPE SIZE	FITTINGS (BENDS)	BEARING AREA (SF)	MINIMUM BLOCK SIZE (FT.)	VOL. OF BLOCKING (CF)	MINIMUM LENGTH OF BLOCKING (FT.-IN.)
4"	TEE	1.3	1.0' x 1.0'	0.3	0'-8"
	90°	1.7	1.5' x 1.5'	0.6	0'-6"
	45°	0.9	1.0' x 1.0'	0.3	0'-6"
	22-1/2°	0.5	1.0' x 1.0'	0.3	0'-6"
6"	TEE	2.4	1.5' x 1.5'	0.6	0'-6"
	90°	3.4	2.0' x 2.0'	1.4	0'-8"
	45°	1.9	1.5' x 1.5'	0.6	0'-6"
	22-1/2°	1.0	1.0' x 1.0'	0.3	0'-6"
	11-1/4°	0.5	1.0' x 1.0'	0.3	0'-6"
8"	TEE	4.0	2.0' x 2.0'	1.5	0'-9"
	90°	5.6	2.5' x 2.5'	2.6	0'-10"
	45°	3.1	2.0' x 2.0'	1.5	0'-9"
	22-1/2°	1.6	1.5' x 1.5'	0.7	0'-6"
	11-1/4°	0.8	1.0' x 1.0'	0.3	0'-6"
10"	TEE	6.2	2.5' x 2.5'	3.0	0'-10"
	90°	8.7	3.0' x 3.0'	4.5	1'-0"
	45°	4.8	2.5' x 2.5'	2.5	0'-8"
	22-1/2°	2.5	2.0' x 2.0'	1.4	0'-6"
	11-1/4°	1.3	1.5' x 1.5'	0.8	0'-6"
12"	TEE	8.6	3.0' x 3.0'	5.0	1'-0"
	90°	12.2	3.5' x 3.5'	7.8	1'-3"
	45°	6.6	2.5' x 2.5'	3.0	0'-9"
	22-1/2°	3.4	2.0' x 2.0'	1.5	0'-6"
	11-1/4°	1.7	1.5' x 1.5'	0.8	0'-6"
16"	TEE	15.2	4.0' x 4.0'	12	1'-3"
	90°	21.4	4.5' x 4.5'	17	1'-6"
	45°	11.6	3.5' x 3.5'	7.5	1'-0"
	22-1/2°	5.9	2.5' x 2.5'	2.7	0'-6"
	11-1/4°	3.0	2.0' x 2.0'	1.7	0'-6"
18"	TEE	19.1	4.0' x 4.0'	19	1'-3"
	90°	27.1	5.0' x 5.0'	23	1'-9"
	45°	14.7	4.0' x 4.0'	12	1'-3"
	22-1/2°	7.5	3.0' x 3.0'	4.7	0'-8"
	11-1/4°	3.8	2.0' x 2.0'	1.9	0'-6"

SOIL BEARING = 2000 LB/FT 11/98

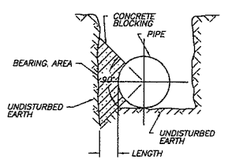

THRUST BLOCK NOTES:

1. POURED BLOCKING SHALL BE POURED IN PLACE WITHOUT DIRECT CONTACT TO THE PIPE OR FITTINGS. SOME PROTECTIVE MATERIAL SUCH AS PLASTIC SHALL BE PLACED BETWEEN THE CONCRETE AND PIPE OR FITTING.
2. POURED BLOCKING SHALL BE POURED AGAINST FIRM UNDISTURBED SOIL.
3. CONCRETE FOR ALL BLOCKING SHALL HAVE A 28-DAY MINIMUM COMPRESSIVE STRENGTH OF 2,500 PSI
4. CONCRETE BLOCKING FOR VERTICAL BENDS SHALL BE PER APWA STD. PLAN NO. 8-22.
5. LAYOUT TO BE APPROVED BY THE CPU INSPECTOR PRIOR TO AND AFTER CONCRETE POUR.

STANDARD THRUST BLOCK

DESIGNED
DRAWN
CRP
HOR. NA
VERT. NA
DATE OCT 2005
DWG:
SHEET W3 OF WL

CALL 48 HOURS BEFORE YOU DIG
1-800-424-5555
"It's the Law"
NORTHWEST UTILITIES NOTIFICATION CENTER

SHAWN G. MOORE
STATE OF WASHINGTON
36097
REGISTERED
PROFESSIONAL ENGINEER
10/28/05
EXPIRES: APRIL 30, 2006

DESIGN & ENGINEERING DIVISION
DESIGN SECTION

NE 15TH AVENUE WATER MAIN
(NE UNION ROAD TO NE 179TH STREET)

CLARK PUBLIC UTILITIES
WATER MAIN INSTALLATION
STANDARD DETAILS

DESIGN BY:	SCALE: N.T.S.
APR'D BY: E.B.	CAD FILE: Std-det20040517
DRAWN BY: J.SIMONS	REVISED: 05/17/2004
DATE: 1-19-00	W.O. #

DETAIL SHEET INFO: JEFF SIMONS 360.992.8543

E:\projects\2275_5\Cad\Final\dwg\Prod\2275_5d03.dwg, 1/3/2006 11:12:03 AM, brr