CLEAN WATER PROGRAM
CAPITAL IMPROVEMENTS PROGRAM
PROJECT #400291

2004 SALMON CREEK WATERSHED IMPROVEMENTS

NORTH GABBERT WETLAND MITIGATION AREA

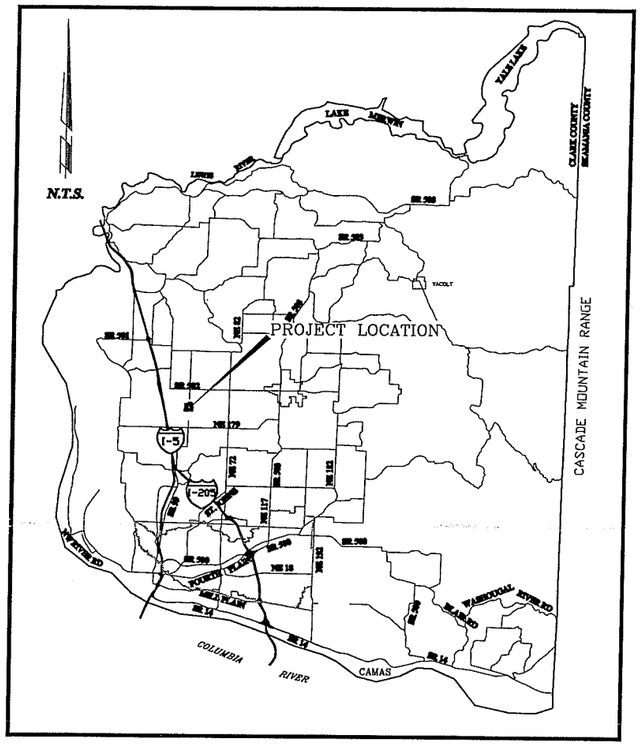

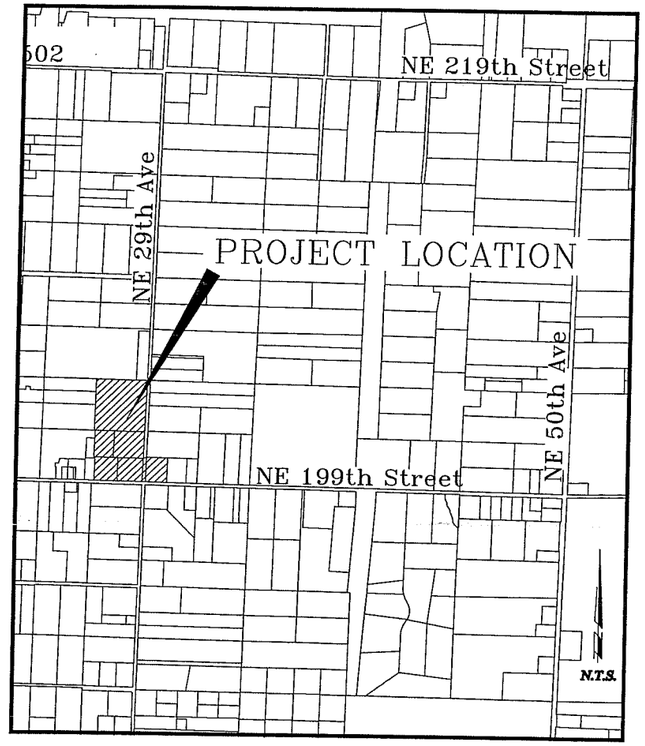

INDEX OF SHEETS

1	GABBERT [C1]	COVER SHEET
2	GABBERT [L1]	SUMMARY OF QUANTITIES, LEGEND & GENERAL NOTES
3	GABBERT [A1]	AERIAL VIEW AND RIGHT OF WAY EXTENTS
4	GABBERT [G1]	GRADING PLAN OVERVIEW
5	GABBERT [G2]	GRADING PLAN AND NOTES
6	GABBERT [DD1]	FACILITY PROFILE
7	GABBERT [DD2]	CROSS SECTIONS & DRAINAGE DETAILS
8	GABBERT [DD3]	DRAINAGE DETAILS
9	GABBERT [EC1]	EROSION CONTROL PLAN
10	GABBERT [EC2]	EROSION CONTROL NOTES AND DETAILS

CLARK COUNTY
DEPARTMENT OF COMMUNITY DEVELOPMENT
ENGINEERING SERVICES

PLANNING LAND USE#
ENGINEERING#
INSPECTION#

proud past, promising future
CLARK COUNTY WASHINGTON

Recommended For Approval

Signature	Clark County Fire Marshal	Date
Signature	Clark County Wetlands Biologist Cassil	Date
Signature	Clark County Habitat Biologist Cassil	Date
Signature	Clark County Grading Review	Date
Signature	Clark County Erosion Control Review	Date
Signature	Clark County Storm Water Plan Review	Date
Signature	Clark County Transportation Review	Date

A	NA	
☐	☐	Stormwater & Erosion Control Ordinance CCC 13.29
☐	☐	Transportation Standards Ordinance CCC 12.86A
☐	☐	Transportation Landscaping Review
☐	☐	Utility Review CCC 13.12A & 12.20A
☐	☐	Clark County Signing & Striping
☐	☐	Road Modification CCC 12.86A.800
☐	☐	CARA CCC 13.78
☐	☐	Geological Hazard Areas Reg. CCC 13.09
☐	☐	Flood Plain Combining District CCC 18.327
☐	☐	Sewer and Water on Plan
☐	☐	Clark County M & O Pavement Defl. Testing
☐	☐	Private Stormwater Covenant
☐	☐	Record Drawing Guarantee
☐	☐	UBC Chapter 33

RECOMMENDED for APPROVAL

Engineering Team Leader — Date

APPROVED for CONSTRUCTION

County Engineer — Date

COMMISSIONERS:

BETTY SUE MORRIS, Chair
CRAIG PRIDEMORE, Commissioner
JUDIE STANTON, Commissioner

proud past, promising future
CLARK COUNTY WASHINGTON

MICHAEL G. SZAMAYA
STATE OF WASHINGTON
37659
REGISTERED
PROFESSIONAL ENGINEER
EXPIRES:OCTOBER 21, 2005

50% DESIGN: FOR REVIEW ONLY

Quality Assurance	Project Manager	Public Works Director/ County Engineer
DATE:	Richard Gamble DATE:	Peter Capell, P.E. DATE:

DEPARTMENT OF PUBLIC WORKS – WATER RESOURCES

HALF SCALE SET: FOR REVIEW ONLY

ENGR NUMBER / ENG ####-#####

SUMMARY OF QUANTITIES

		ROADWAY AND TRAFFIC SIGNALIZATION	
1	180.00	CONSTRUCTION SIGNS CLASS A	SQ. FT.
2	1.00	MOBILIZATION	L.S.
3	120.00	SAWCUT EXISTING PAVEMENT	L.F.
4	30.00	ROADWAY EXCAVATION (INCL. HAUL)	C.Y.
5	25.00	CONST. GEOTEXTILE FOR SUBGRADE STABILIZATION	S.Y.
6	630.00	CRUSHED SURFACING BASE COURSE	TON
7	1.00	LANDSCAPING	L.S.
8	675.00	6' CHAIN LINK FENCING	L.F.
9	1.00	DOUBLE 20' CHAIN LINK GATE	EACH
10			
11		STORMWATER MANAGEMENT FACILITY	
12			
13	1.00	CLEARING AND GRUBBING	L.S.
14	16,000.00	POND/SWALE EXCAVATION (INCL. HAUL)	C.Y.
15	1.00	OVERFLOW STRUCTURE	EACH
16	37.00	STM. SEWER PIPE 8" DIAM.	L.F.
17	65.00	STM. SEWER PIPE 12" DIAM.	L.F.
18	35.00	CLASS III REINF. CONC. STM SEWER PIPE 24" DIAM.	L.F.
19	45.00	PLAIN CONC. CULV. PIPE 12" DIAM.	L.F.
20	2.00	DITCH INLET	EACH
21	2.00	TRASH RACK	EACH
22	1.00	BIOFILTRATION SWALE	L.S.
23	15.00	HAND PLACED RIPRAP	TON
24	1,200.00	SILT FENCING	L.F.
25	1.00	EROSION CONTROL	L.S.
26	1.00	SEEDING, FERTILIZING, MULCHING	ACRE
27	1.00	WETLAND PLANTING	L.S.
28	1.00	CLEAN WATER/ WATER QUALITY FACILITY SIGN	ACRE

LEGEND

NEW PROPERTY LINE
NEW ROW LINE
NEW EASEMENT LINE
NEW EDGE OF PAVEMENT
NEW CURB LINE
NEW CENTER LINE
NEW FENCE LINE
NEW STORM DRAIN OR CULVERT
PERMANENT SLOPE EASEMENT

EXISTING EDGE OF PAVEMENT
EXISTING CURB LINE
EXISTING CENTER LINE
EXISTING FENCE LINE
EXISTING TELEPHONE LINE
EXISTING WATER LINE
EXISTING UNDERGROUND ELECTRIC
EXISTING SANITARY SEWER LINE
EXISTING STORM DRAINAGE
EXISTING GAS LINE
EXISTING CULVERT
EXISTING DITCH CENTER LINE
SAWCUT AND REMOVAL

SYMBOLS

NEW CURB OPENING INLET
NEW CATCH BASIN
NEW MANHOLE
NEW CURB INLET
NEW COMBINATION CURB INLET
C100 CURVE TABLE
EXISTING TRANSFORMER
SAN EXISTING SANITARY SEWER MH
EXISTING FIRE HYDRANT
EXISTING WATER METER
CL EXISTING CLEAN OUT
G EXISTING GAS VALVE
W EXISTING WATER VALVE
EXISTING SIGNAL POLE
T EXISTING TELEPHONE VAULT
tv EXISTING TELEVISION BOX

EXISTING CURB OPENING INLET
EXISTING CATCH BASIN
S EXISTING STORM MH
EXISTING MISC MH
EXISTING SHRUB
EXISTING CONIFEROUS TREE
EXISTING DECIDUOUS TREE
EXISTING SIGN
EXISTING DECIDUOUS TREE
J EXISTING J BOX
T EXISTING TELEPHONE MANHOLE
EXISTING TELEPHONE POLE
EXISTING LIGHT
EXISTING GUY ANCHOR
EXISTING POWER POLE
MAILBOX EXISTING MAIL BOX
T EXISTING TELEPHONE PEDISTAL
EXISTING SPRINKLER HEAD
EXISTING BRUSH LINE
EXISTING HEDGE

HALF SCALE SET: FOR REVIEW ONLY 50% DESIGN: FOR REVIEW ONLY

DESIGNED MGS
DRAWN KAL
CRP 400291
HOR. N/A
VERT. N/A
DATE 8/16/04
DWG: GABBERT[L1]

CALL 48 HOURS BEFORE YOU DIG
1-800-553-4344
"It's the Law"
NORTHWEST UTILITIES NOTIFICATION CENTER

MICHAEL G. SZWAYA
STATE OF WASHINGTON
37659
REGISTERED PROFESSIONAL ENGINEER
EXPIRES: OCTOBER 21, 2005

ENVIRONMENTAL SERVICES DIVISION
STORMWATER AND WATERSHED RESOURCES SECTION

GABBERT MITIGATION
SUMMARY OF QUANTITIES, LEGEND & GENERAL NOTES

proud past, promising future
CLARK COUNTY
WASHINGTON

HALF SCALE SET: FOR REVIEW ONLY

50% DESIGN: FOR REVIEW ONLY

DESIGNED	MGS
DRAWN	KAL
CRP	400291
HOR.	1"=50'
VERT.	N/A
DATE	8/12/04
DWG:	GABBERT[A1]
SHEET 03	OF 10

CALL 48 HOURS BEFORE YOU DIG
1-800-553-4344
"It's the Law"
NORTHWEST UTILITIES NOTIFICATION CENTER

MICHAEL G. SWAKA
STATE OF WASHINGTON
37359
REGISTERED PROFESSIONAL ENGINEER
EXPIRES OCTOBER 21, 2005

ENVIRONMENTAL SERVICES DIVISION
STORMWATER AND WATERSHED RESOURCES SECTION

GABBERT MITIGATION
AERIAL VIEW AND RIGHT OF WAY EXTENTS

proud past, promising future
CLARK COUNTY
WASHINGTON

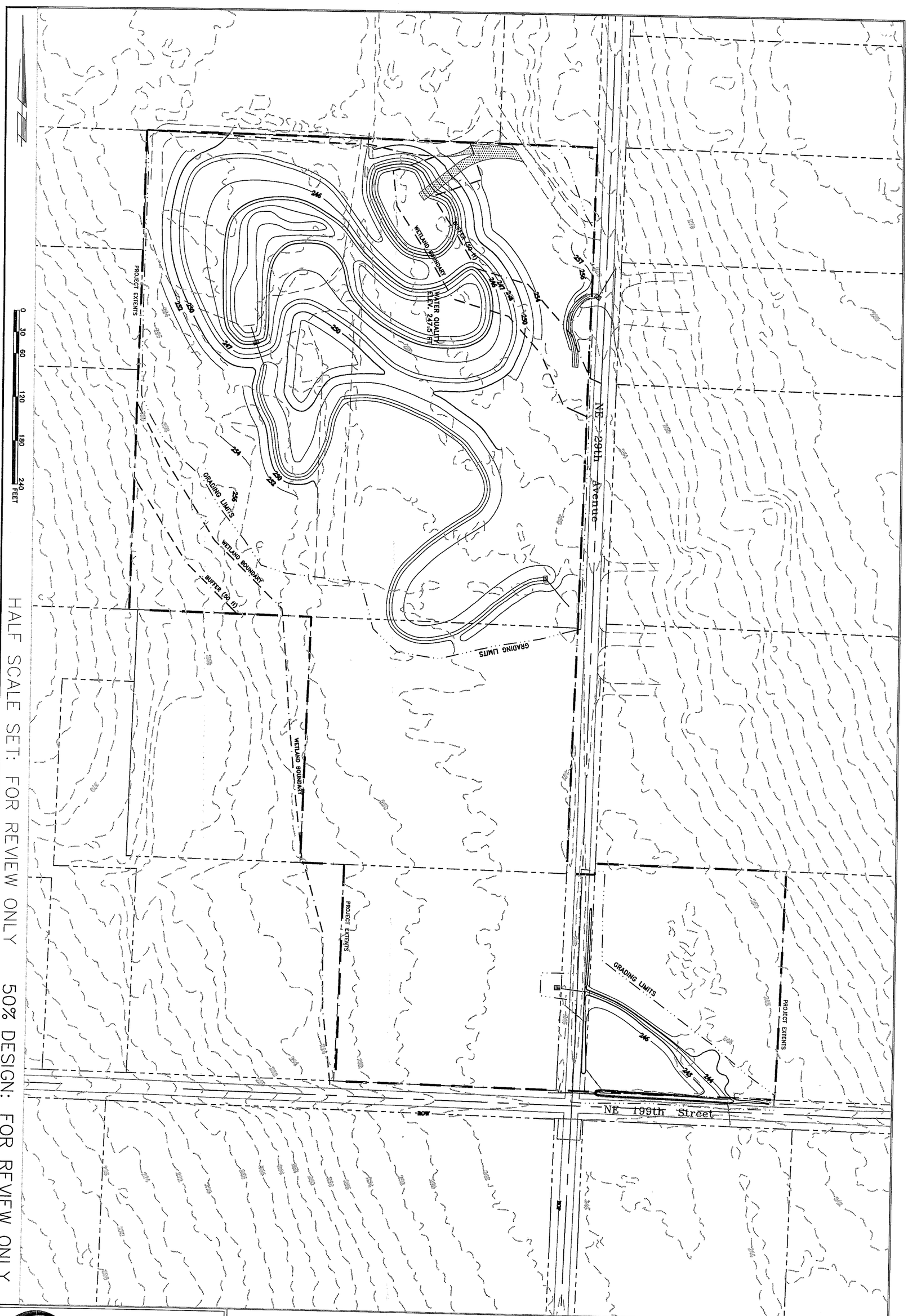

HALF SCALE SET: FOR REVIEW ONLY

50% DESIGN: FOR REVIEW ONLY

CLARK COUNTY
WASHINGTON
proud past, promising future

ENVIRONMENTAL SERVICES DIVISION
STORMWATER AND WATERSHED RESOURCES SECTION

GABBERT MITIGATION
GRADING PLAN OVERVIEW

MICHAEL G. SZMAN
STATE OF WASHINGTON
37659
REGISTERED PROFESSIONAL ENGINEER
EXPIRES: OCTOBER 21, 2005

CALL 48 HOURS BEFORE YOU DIG
1-800-553-4344
"It's the Law"
NORTHWEST UTILITIES NOTIFICATION CENTER

DESIGNED	MGS
DRAWN	KAL
CRP	400291
HOR.	1"=60'
VERT.	N/A
DATE	8/16/04
DWG:	GABBERT[G1]

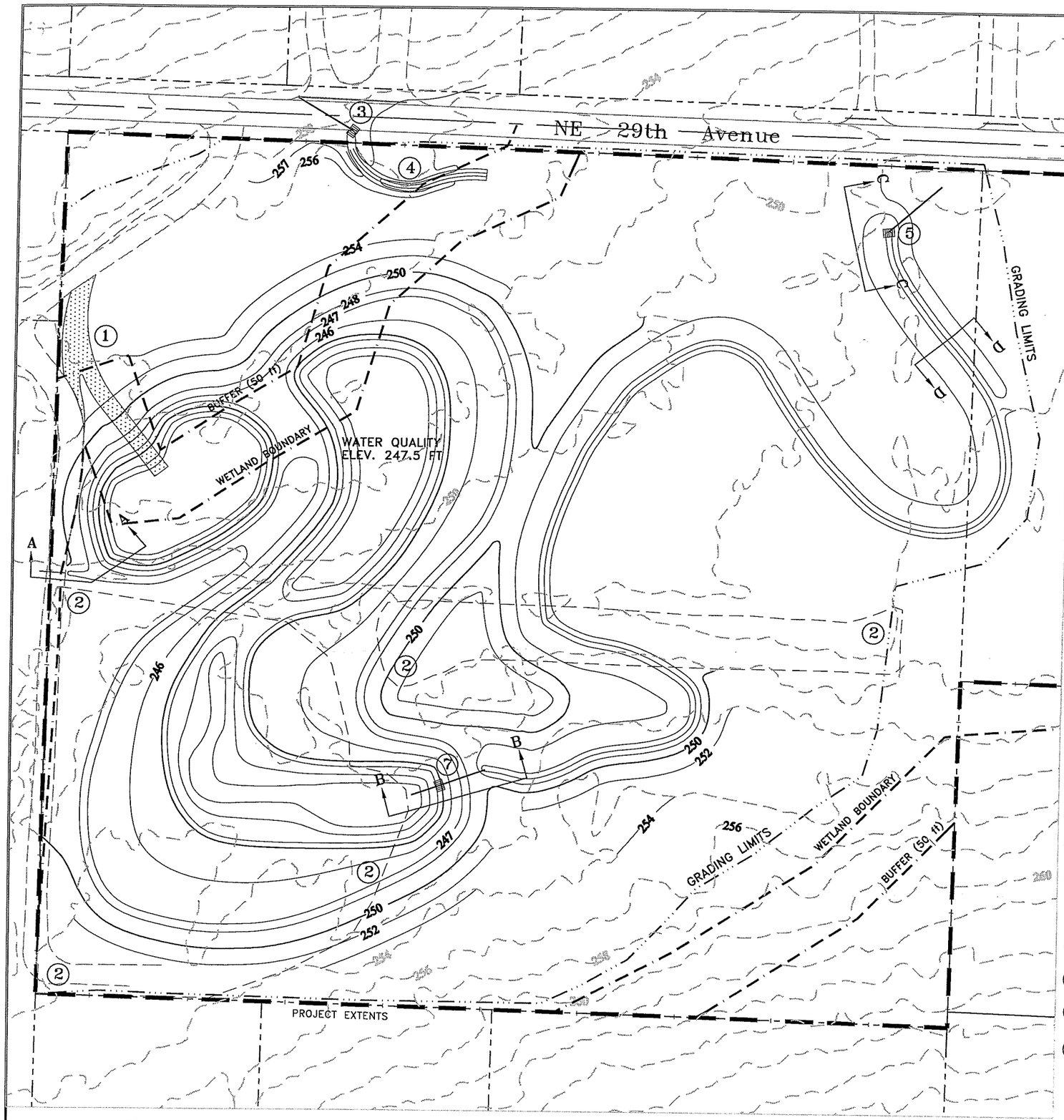

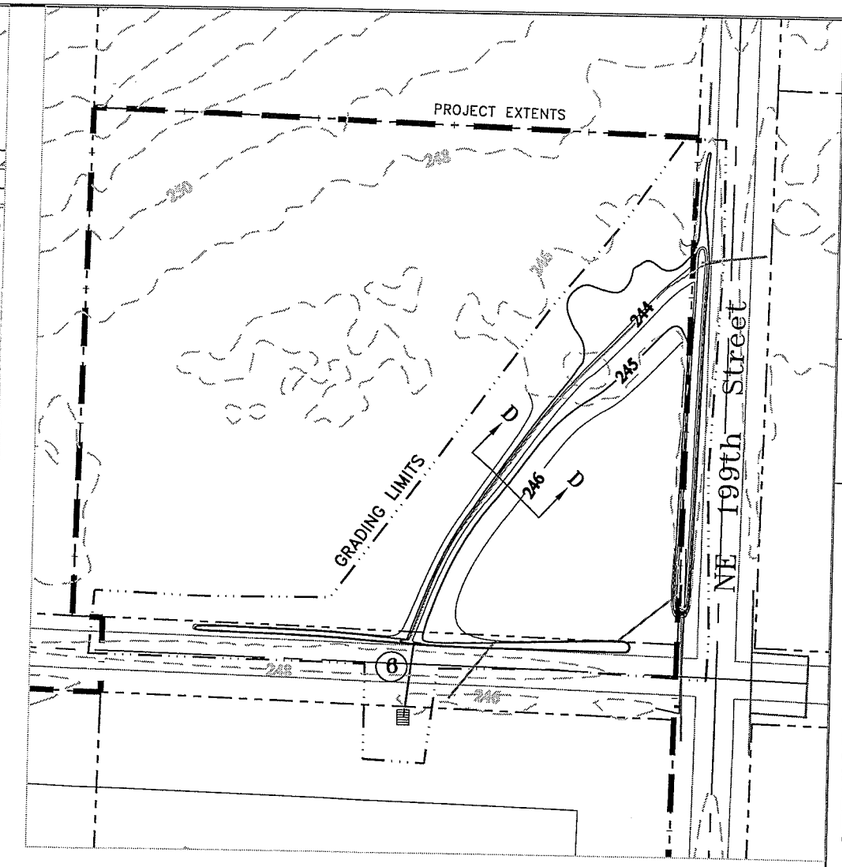

GENERAL NOTES:

1. PRIOR TO THE START OF WORK CONTRACTOR TO OBTAIN ALL NECESSARY PERMITS FOR DISPOSAL OF MATERIAL REMOVED FROM THE SITE.
2. CONTRACTOR TO EXCAVATE AND EMBANK PER THIS GRADING PLAN. ESTIMATED EXCAVATION 16,000 CUBIC YARDS, AND NEGLIGIBLE EMBANKMENT. DISTURBED AREAS TO BE COVERED WITH JUTE MAT WHERE INDICATED, FOLLOWING FINAL GRADING.
3. REFER TO EROSION CONTROL PLAN FOR TEMPORARY STRUCTURES.
4. REFER TO SHEETS #7 AND #8 FOR CROSS SECTIONS AND CONSTRUCTION DETAILS.

CONSTRUCTION NOTES:

1. CONTRACTOR TO INSTALL NEW MAINTENANCE ACCESS ROAD FROM EXISTING DRIVEWAY TO BOTTOM OF SEDIMENTATION POND WITH 7:1 SLOPE.
2. APPROXIMATE EXTENTS OF NON-NATIVE MATERIAL. THIS MATERIAL IS TO BE REMOVED BY CONTRACTOR (TYPICAL DEPTH 1-2 FT).
3. CONTRACTOR TO INSTALL NEW 12" CULVERT TO CONNECT DITCH EAST OF NE 29TH AVE TO NEW BIOSWALE.
4. CONTRACTOR TO INSTALL NEW BIOSWALE PER DETAIL D11, SHEET #7.
5. CONTRACTOR TO INSTALL NEW TRASH RACK AND 12" CULVERT TO CONNECT WITH EXISTING DITCH ON WEST SIDE OF NE 29TH AVE.
6. CONTRACTOR TO INSTALL NEW DITCH INLET AND CONNECT NEW 24" CULVERT CROSSING NE 29TH AVE.
7. CONTRACTOR TO INSTALL NEW 8" PIPING WITH CONTROL STRUCTURE PER DETAIL 2.0, SHEET #7.

HALF SCALE SET: FOR REVIEW ONLY 50% DESIGN: FOR REVIEW ONLY

DESIGNED	MGS
DRAWN	KAL
CRP	400291
HOR.	1"=40'
VERT.	N/A
DATE	08/16/04
DWG:	GABBERT[G2]
SHEET 05	OF 10

CALL 48 HOURS BEFORE YOU DIG 1-800-553-4344 "It's the Law" NORTHWEST UTILITIES NOTIFICATION CENTER

MICHAEL G. SZWACA STATE OF WASHINGTON 37459 PROFESSIONAL ENGINEER EXPIRES: OCTOBER 21, 2005

ENVIRONMENTAL SERVICES DIVISION
STORMWATER AND WATERSHED RESOURCES SECTION

GABBERT MITIGATION
GRADING PLAN AND NOTES

proud past, promising future
CLARK COUNTY WASHINGTON

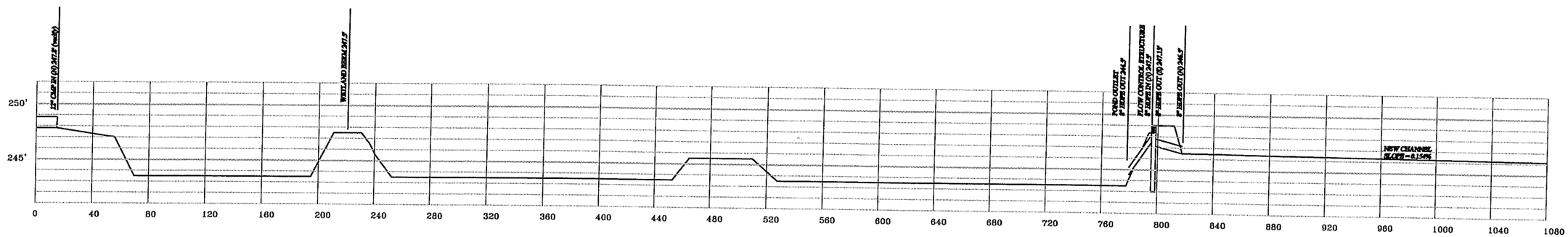

VER. SCALE: 1"=5'
HOR. SCALE: 1"=40'

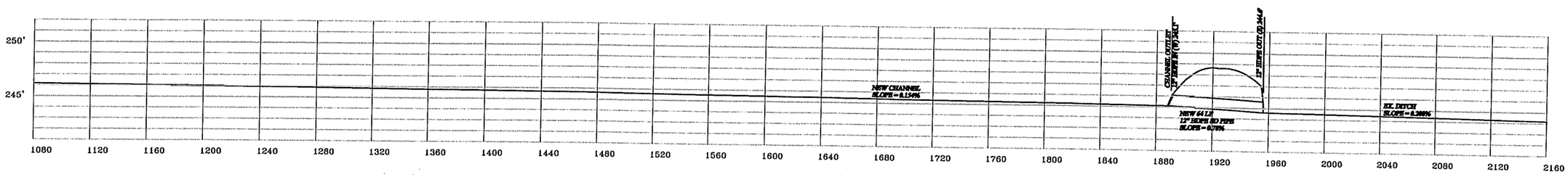

VER. SCALE: 1"=5'
HOR. SCALE: 1"=40'

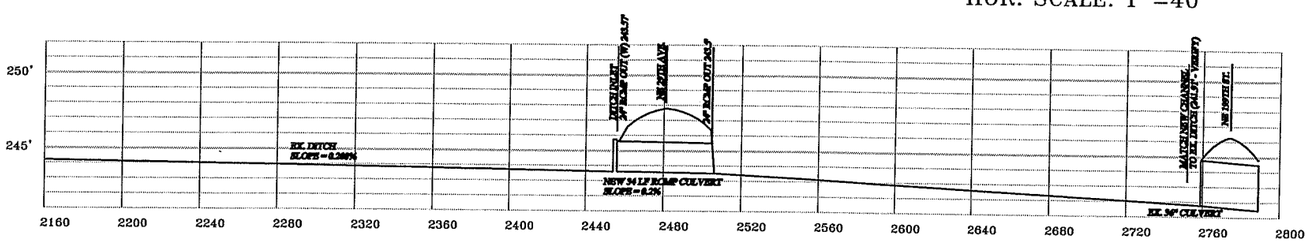

VER. SCALE: 1"=5'
HOR. SCALE: 1"=40'

HALF SCALE SET: FOR REVIEW ONLY 50% DESIGN: FOR REVIEW ONLY

DESIGNED	MGS
DRAWN	KAL
CRP	400291
HOR.	1" = 40'
VERT.	1" = 5'
DATE	8/16/04
DWG:	GABBERT[DD1]
SHEET	06 OF 10

CALL 48 HOURS BEFORE YOU DIG
1-800-553-4344
"It's the Law"
NORTHWEST UTILITIES NOTIFICATION CENTER

MICHAEL G. SWAYZE
STATE OF WASHINGTON
37659
REGISTERED PROFESSIONAL ENGINEER
EXPIRES OCTOBER 21, 2005

ENVIRONMENTAL SERVICES DIVISION
STORMWATER AND WATERSHED RESOURCES SECTION

GABBERT MITIGATION
FACILITY PROFILE

proud past, promising future
CLARK COUNTY
WASHINGTON

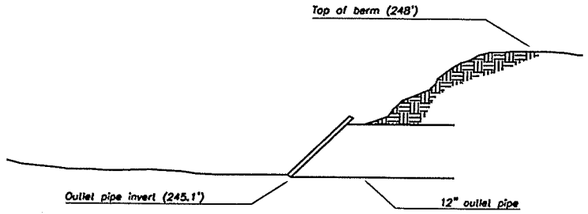

SECTION C–C
NTS

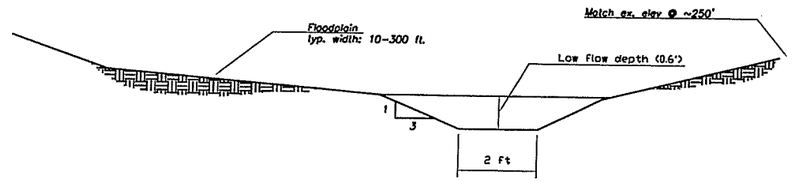

SECTION D–D
NTS

WATER QUALITY DESIGN DETAILS

BIOSWALE DETAILS
LENGTH: 105 LF
BOTTOM WIDTH: 2.5 FT
TOP WIDTH: 5.2 FT
DESIGN FLOW: 0.1 CFS
RESIDENCE TIME: 22 MIN.
MAX. VELOCITY: 0.078 FT/SEC

WETLAND DETAILS
DESIGN VOLUME: 75% – 6 MONTH EVENT (3.45 AC–FT)

CELL #1:
VOLUME: 1.15 AC–FT
CELL #2
VOLUME: 2.30 AC–FT

DEPTH – WATER SURFACE RATIO
<6": 50%
1'–3': 30%
3'–4': 20%

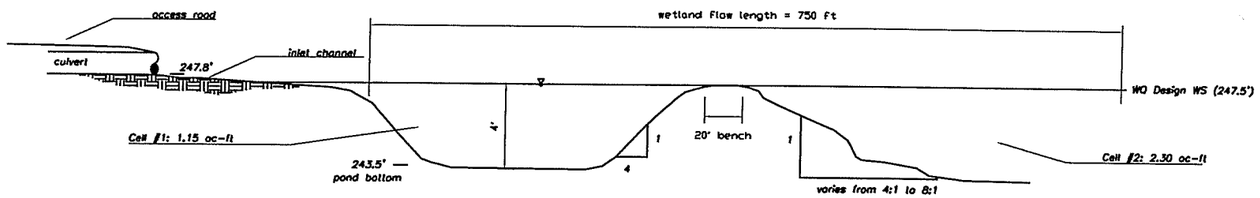

SECTION A–A
NTS

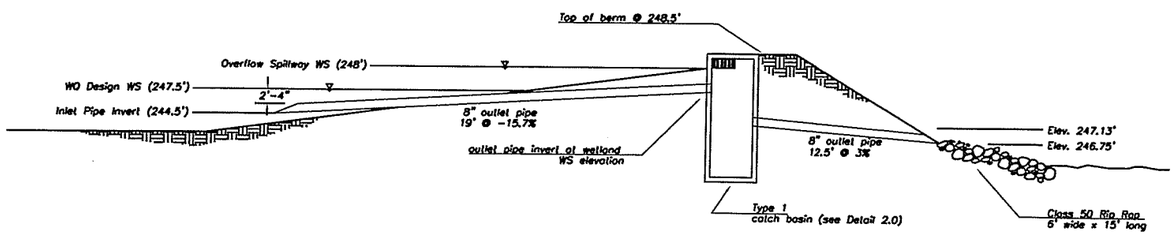

SECTION B–B
NTS

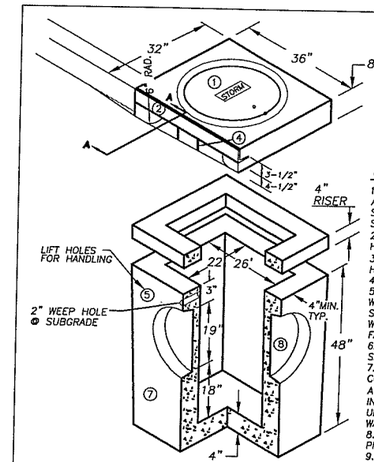

TYPE 1 CURB INLET
NTS

① 24" CAST IRON LOCKING FRAME & COVER
② 2 1/2"x3 1/2"x1/4"x 35 7/8" GALVANIZED ANGLE IRON
③ 2"x2 1/2"x1/4"x33" GALVANIZED ANGLE IRON
④ 2 EA. #4 TRASH BARS @ 9" O.C.
⑤ 2 EA. BASE UNIT LIFT HOLES
⑦ STANDARD TYPE 1 BASE UNIT
⑧ PIPE KNOCKOUTS ALL FOUR SIDES.

NOTES:
1. CURB INLET TO BE CONSTRUCTED IN ACCORDANCE WITH ASTM C478 & C890 UNLESS SHOWN ON PLANS OR NOTED IN STANDARD SPECIFICATIONS.
2. REINFORCING FOR INLET UNIT, 3 EA. #4 HORZONTAL BARS.
3. REINFORCING FOR TOP UNIT, 2 EA. #3 HORZONTAL BARS.
4. ALL REBAR TO MEET ASTM A615 GRADE 60.
5. AS AN ACCEPTABLE ALTERNATIVE TO REBAR, WELDED WIRE FABRIC HAVING A MIN. AREA OF 0.12 SQAURE INCHES PER FOOT MAY BE USED. WELDED WIRE FABRIC SHALL COMPLY TO ASTM A497. WIRE FABRIC SHALL NOT BE PLACED IN KNOCKOUTS.
6. ALL REINFORCED CAST–IN–PLACE CONCRETE SHALL BE CLASS 4,000.
7. PRECAST BASES SHALL BE FURNISHED WITH CUTOUTS OR KNOCKOUTS. KNOCKOUTS SHALL HAVE A WALL THICKNESS OF 2" MIN. ALL PIPE SHALL BE INSTALLED IN FACTORY PROVIDED KNOCKOUTS. UNUSED KNOCKOUTS NEED NOT BE GROUTED IF WALL IS LEFT INTACT.
8. KNOCKOUTS OR CUTOUT HOLE SIZE IS EQUAL TO PIPE OUTER DIAM. PLUS INLET WALL THICKNESS.
9. ROUND KNOCKOUTS MAY BE ON ALL 4 SIDES WITH MAX. DIAM. OF 17".
10. THE MAX. DEPTH FROM THE FINISHED GRADE TO THE PIPE INVERT IS 5'–0".
11. ANY PROTUDING ENDS OF PIPES SHALL BE TRIMMED FLUSH WITH THE INSIDE WALLS AND GROUTED TO THE SATISFACTION OF ENGINEER.
12. INSTALL REMOVABLE APWA TYPE 60A TRAP OR EQUAL, SEE STD. PLAN D2.1.
14. CONTRACTOR SHALL HAVE THE OPTION OF FURNISHING PRECAST OR CAST–IN–PLACE INLET STRUCTURES, UNLESS SPECIFIED.

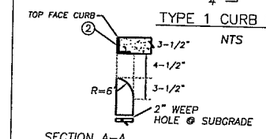

SECTION A–A

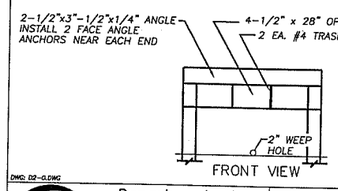

FRONT VIEW

DWG: D2–0.DWG

NO.	REVISIONS	DATE	BY

Department of Public Works
CLARK COUNTY
WASHINGTON
proud past, promising future

FLOW CONTROL STRUCTURE
STANDARD TYPE 1 CURB INLET

APPROVED
COUNTY ENGINEER — DATE 01/01/04

STANDARD
D2.0
PLAN No.
DESIGNED SCN
DRAWN SCN
DATE 09/09/02

DESIGNED MCS
DRAWN KAL
CRP 400291
HOR. N/A
VERT. N/A
DATE 8/16/04
DWG:GABBERT[DD2]

CALL 48 HOURS BEFORE YOU DIG
1–800–553–4344
"It's the Law"
NORTHWEST UTILITIES NOTIFICATION CENTER

STATE OF WASHINGTON
MICHAEL G. SEMAYA
REGISTERED PROFESSIONAL ENGINEER
EXPIRES: OCTOBER 21, 2005

ENVIRONMENTAL SERVICES DIVISION
STORMWATER AND WATERSHED RESOURCES SECTION

GABBERT MITIGATION
CROSS SECTIONS & DRAINAGE DETAILS

proud past, promising future
CLARK COUNTY
WASHINGTON

HALF SCALE SET: FOR REVIEW ONLY 50% DESIGN: FOR REVIEW ONLY

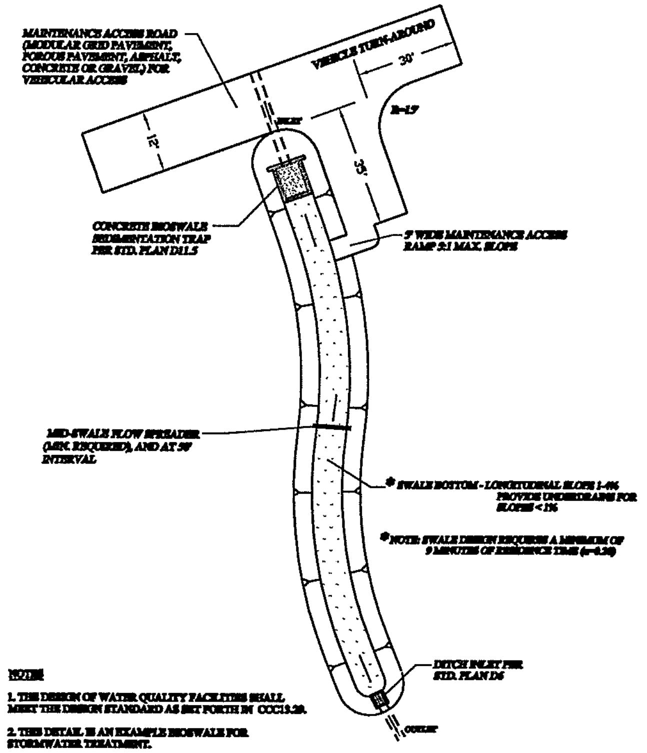

NOTES

1. THE DESIGN OF WATER QUALITY FACILITIES SHALL MEET THE DESIGN STANDARD AS SET FORTH IN CCC13.29.

2. THIS DETAIL IS AN EXAMPLE BIOSWALE FOR STORMWATER TREATMENT.

3. SEE STANDARD SWALE SECTIONS, AND FLOW SPREADER DETAILS.

NO.	REVISIONS	DATE	BY

DWG: D11-1.DWG

DEPARTMENT OF PUBLIC WORKS — CLARK COUNTY WASHINGTON — proud past, promising future

EXAMPLE BIOSWALE SCHEMATIC — APPROVED — COUNTY ENGINEER — 01/01/04 DATE — STANDARD D11.1 PLAN No. DESIGNED SCH DRAWN SCH DATE 08/28/02

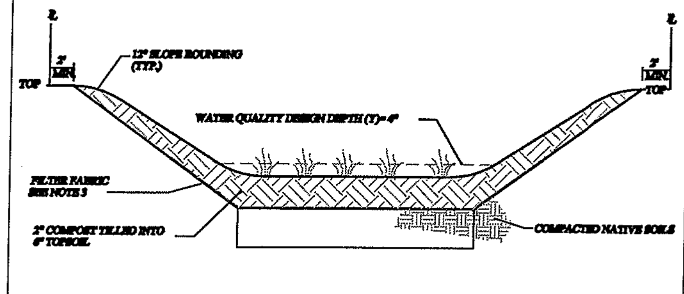

WET/TREATMENT AREA SEED MIX

SCIENTIFIC NAME	COMMON NAME	%
Festuca arundinacea	Tall Fescue	30
Elymus glaucus	Blue Wildrye	25
Festuca rubra	Native Red Fescue	10
Juncus tenuis	Slender Rush	10
Scirpus microcarpus	Small-fruited Bulrush	25

% MIXTURE BY PURE LIVE SEED (PLS)
Hydroseed application rate: 4.5 lbs/Ac.
Broadcast application rate: 6 lbs/Ac.

DRY/UPPER SIDE SLOPE AREA SEED MIX

SCIENTIFIC NAME	COMMON NAME	%
Bromus carinatus	California Brome	20
Elymus glaucus	Blue Wildrye	20
Festuca rubra	Native Red Fescue	50
Lupinus polyphyllus	Large-leaf Lupine	10

% MIXTURE BY PURE LIVE SEED (PLS)
Hydroseed application rate: 32 lbs/Ac.
Broadcast application rate: 40 lbs/Ac.

NOTE: IF BIOSWALE IS INSTALLED DURING A PERIOD OF WET WEATHER, IT CAN BE ESTABLISHED BY SODDING. SINCE SOD IS NOT AVAILABLE IN RECOMMENDED GRASSES, IT SHOULD BE OVER SOWN WITH A RECOMMENDED MIX AT THE BEGINNING OF THE GROWING SEASON. IT IS RECOMMENDED TO INSTALL A SOD THAT IS A MIX OF CREEPING FESCUE AND HARD & SHEEP FESCUES.

NOTES

1. THE DESIGN OF WATER QUALITY FACILITIES SHALL MEET THE STANDARD AS SET FORTH IN CCC13.29.

2. SOD SHALL BE LAID PERPENDICULAR TO SLOPE FROM BOTTOM TO TOP, WITH JOINTS STAGGERED.

3. FOR NATIVE SOILS WITH CLASSIFICATIONS A-1-a, A-1-b, A-3, A-2-4, AND A-2-5 AS DEFINED IN AASHTO SPEC. M145, INSTALL LINQ TYPAR-3401 FILTER FABRIC OR EQUIVALENT WITH PERMEABILITY RATE OF 0.5 TO 2.4 INCHES/HOUR.

4. SWALE LONGITUDINAL SLOPE: 1%-4% MAX. UNDERDRAINS REQUIRED FOR SLOPES LESS THAN 1%, SEE STANDARD PLAN D11.3

5. SWALE SHALL HAVE A VIABLE STAND OF GRASS APPROVED BY THE COUNTY INSPECTOR PRIOR TO PAVING.

NO.	REVISIONS	DATE	BY

DWG: D11-2.DWG

DEPARTMENT OF PUBLIC WORKS — CLARK COUNTY WASHINGTON — proud past, promising future

TYPICAL BIOSWALE SECTION — APPROVED — COUNTY ENGINEER — 01/01/04 DATE — STANDARD D11.2 PLAN No. DESIGNED SCH DRAWN SCH DATE 07/07/03

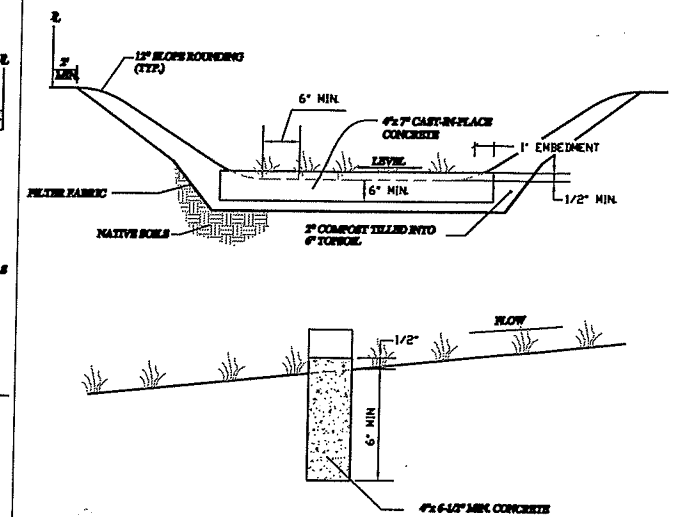

NOTES

1. LEVEL SPREADERS SHALL BE INSTALLED AT SWALE MIDPOINT FOR SHORT SWALE LENGTHS OF ≤100, AND AT A MINIMUM INTERVAL OF 50', TO KEEP THE FLOWS FROM CONCENTRATING. THE SPREADER SHALL BE INSTALLED LEVEL AND ON CONTOUR.

2. CONCRETE SPREADER SHALL BE CAST-IN-PLACE. TOP OF SPREADER SHALL BE BROOM FINISHED IN THE DIRECTION OF FLOW.

NO.	REVISIONS	DATE	BY

DWG: D11-4.DWG

DEPARTMENT OF PUBLIC WORKS — CLARK COUNTY WASHINGTON — proud past, promising future

TYPICAL BIOSWALE LEVEL SPREADER — APPROVED — COUNTY ENGINEER — 01/01/04 DATE — STANDARD D11.4 PLAN No. DESIGNED SCH DRAWN SCH DATE 07/07/03

ROADWAY SHOULDER INCLUDES LAWN AND LANDSCAPE

SHOULDER ROCK:

1. 0.50 ft. minimum depth (1 1/4" minus) crushed rock. (Clark County Approved Material).
2. Compacted to 95% of maximum density. See trench zone.
3. Rock shall extend from E.O.P. to the back of trench at approx. .05 Ft./Ft. slope.

LAWN & LANDSCAPE AREAS:

1. A County approved top soil shall be placed 0.50 Ft. in depth.
2. Area to be restored to match existing.

TRENCH ZONE:

Where the distance from E.O.T. to E.O.P. is less than or equal to the depth of the trench; these conditions shall apply:

1. Granular backfill as approved by local agency or W.S.D.O.T. specifications for granular backfill. Compacted to 95% of maximum density in the trench zone using Method C compaction as per Section 2-03.3 (14)C.
2. Native material may be used if approved prior to construction.
3. Trench zone width -- see below.
4. Shoulder rock or landscaped sections as applicable.

PIPE ZONE:

1. Pipe zone material as specified by utility owner, and shall conform to section 9-03.12(3) WSDOT Specs.
2. 1.0 ft. max. from top of the pipe.

CONDITIONS:

1. A copy of the permit and requirements shall be on the job site at all times.
2. The permit holder shall be responsible for all restoration and maintenance of ditches, shoulders, driveways, landscaping, ect.
3. Call Clark County at 397-2446 twenty-four hours prior to commencing work.

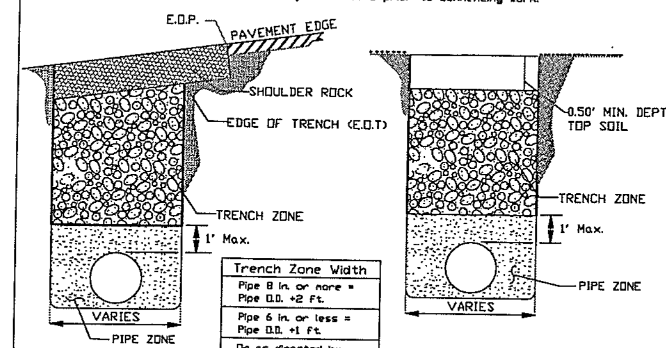

Trench Zone Width
Pipe 8 in. or more = Pipe O.D. +2 Ft.
Pipe 6 in. or less = Pipe O.D. +1 Ft.
Or as directed by the Engineer

NO.	REVISIONS	DATE	BY
1	NOTE, FIG #	05/02/01	DS
2	Pipe Zone Notes	10/07/02	SCH

DWG: U5.DWG

DEPARTMENT OF PUBLIC WORKS — CLARK COUNTY WASHINGTON

ROADWAY SHOULDER INCLUDES LAWN & LANDSCAPE — APPROVED — COUNTY ENGINEER — 5/4/01 DATE — STANDARD U5 PLAN No. DESIGNED DRAWN DATE 04/25/03

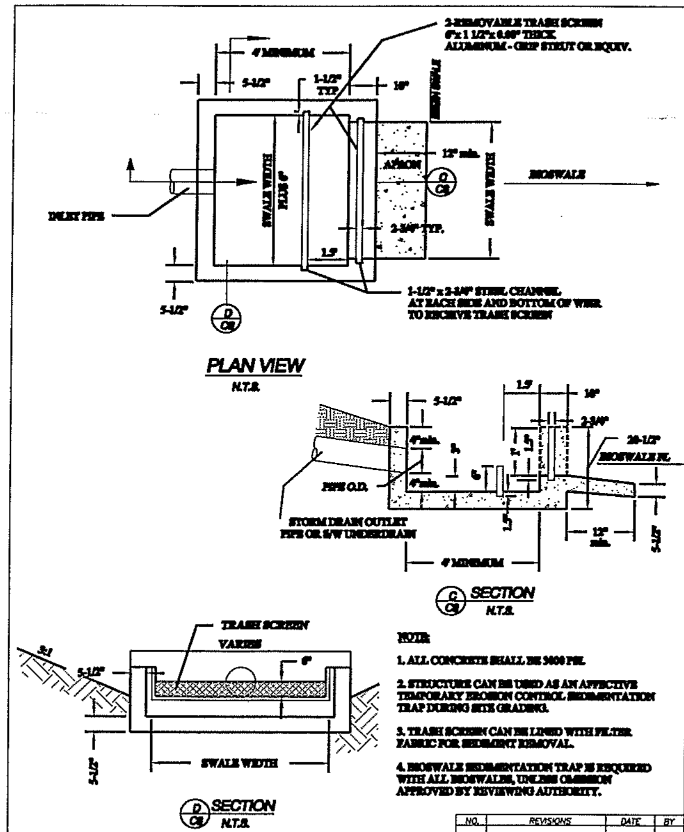

NOTE

1. ALL CONCRETE SHALL BE 3000 PSI.

2. STRUCTURE CAN BE USED AS AN AFFECTIVE TEMPORARY EROSION CONTROL SEDIMENTATION TRAP DURING SITE GRADING.

3. TRASH SCREEN CAN BE LINED WITH FILTER FABRIC FOR SEDIMENT REMOVAL.

4. BIOSWALE SEDIMENTATION TRAP IS REQUIRED WITH ALL BIOSWALES, UNLESS OMISSION APPROVED BY REVIEWING AUTHORITY.

NO.	REVISIONS	DATE	BY

DWG: D11.5.DWG

DEPARTMENT OF PUBLIC WORKS — CLARK COUNTY WASHINGTON — proud past, promising future

BIOSWALE SEDIMENTATION TRAP — APPROVED — COUNTY ENGINEER — 01/01/04 DATE — STANDARD D11.5 PLAN No. DESIGNED SCH DRAWN SCH DATE 07/07/03

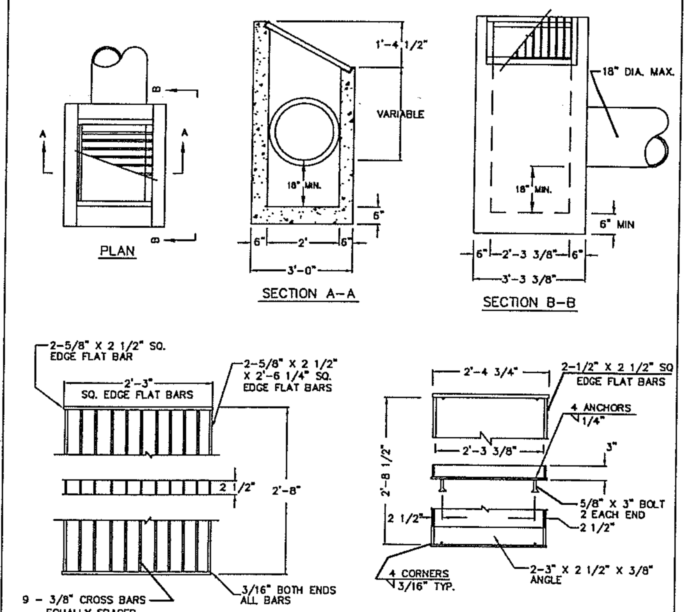

NOTES:

1. DITCH INLET CONSTRUCTION IN ACCORDANCE WITH ASTM C-478
2. CATCH BASIN, FRAME, AND GRATES SHALL BE FLAT BAR STEEL OR APPROVED EQUAL.
3. INSIDE FRAME DIMENSIONS: 2'-3 3/8"x 2'-8 1/2"".
4. 3/8" CROSS BARS SHALL BE FLUSH WITH THE GRATE SURFACE AND MAY BE FILLET WELDED, RESISTANCE WELDED OR ELECTROFORGED TO BEARING BARS.

NO.	REVISIONS	DATE	BY

DWG: D6.DWG

DEPARTMENT OF PUBLIC WORKS — CLARK COUNTY WASHINGTON — proud past, promising future

DITCH INLET — APPROVED — COUNTY ENGINEER — 01/01/04 DATE — STANDARD D6 PLAN No. DESIGNED SCH DRAWN SCH DATE 09/17/02

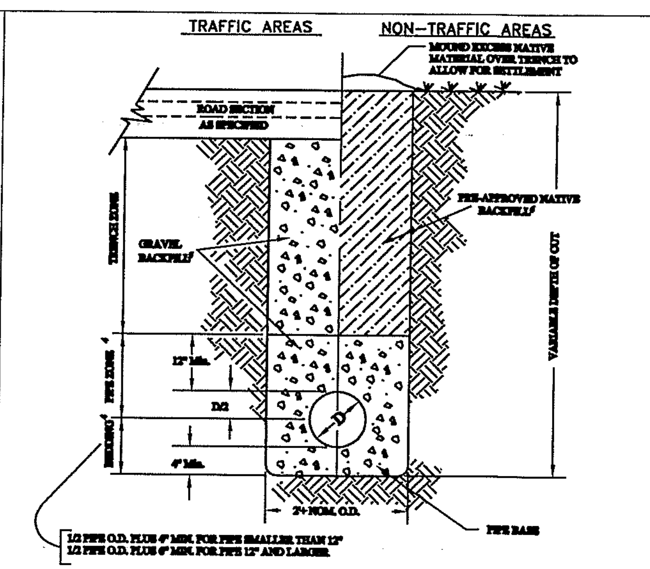

NOTES

1. FOR INSTALLATION OF DRAINAGE PIPE IN NEW DEVELOPMENT.

2. GENERAL PIPE INSTALLATION REQUIREMENTS SHALL BE PER SECTION 7-08 WSDOT SPECS.

3. TRENCH BACK FILL SHALL CONFORM TO CCC 40.350.030(C)(4)(e).

4. PIPE ZONE AND BEDDING MATERIAL SHALL CONFORM TO SECTION 9-03.12(3) WSDOT SPECS.

5. GRAVEL BACKFILL PER WSDOT SPECIFICATION SECTION 9-03.19, AND COMPACTED TO 95% MAX. DENSITY (AASHTO T-99). NATIVE SOILS MAY BE USED UPON APPROVAL BY REVIEWING AUTHORITY IF TESTING SHOWS MATERIAL IS CLASSIFIED AS A-1 OR A-3 BY AASHTO.

6. OUTSIDE THE ROADWAY PRISM, SUITABLE NATIVE BACKFILL SHALL BE COMPACTED TO 90% MAX. DENSITY (AASHTO T-99).

7. ALL COMPACTION SHALL BE IN ACCORDANCE WITH THE COMPACTION CONTROL TEST OF SECTION 2-03.3(14)D.

NO.	REVISIONS	DATE	BY

DWG: D14.DWG

DEPARTMENT OF PUBLIC WORKS — CLARK COUNTY WASHINGTON — proud past, promising future

PIPE BEDDING AND BACKFILL DETAIL — APPROVED — COUNTY ENGINEER — 01/01/04 DATE — STANDARD D14 PLAN No. DESIGNED SCH DRAWN SCH DATE 6/14/03

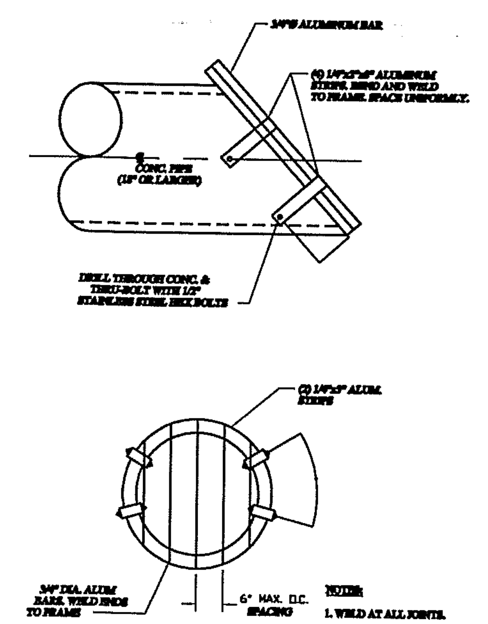

NOTES

1. WELD AT ALL JOINTS.

2. SHOP DRAWING REQUIRED.

3. USE WITH PLASTIC PIPE REQUIRES MODIFICATION TO BE REVIEWED AND APPROVED BY COUNTY ENGINEER.

NO.	REVISIONS	DATE	BY

DWG: D25.DWG

DEPARTMENT OF PUBLIC WORKS — CLARK COUNTY WASHINGTON — proud past, promising future

TRASH SCREEN — APPROVED — COUNTY ENGINEER — 01/01/04 DATE — STANDARD D25 PLAN No. DESIGNED DRAWN DATE 10/04/02

HALF SCALE SET: FOR REVIEW ONLY   50% DESIGN: FOR REVIEW ONLY

DESIGNED	MGS
DRAWN	KAL
CRP	400291
HOR.	N/A
VERT.	N/A
DATE	8/16/04
DWG:	GABBERT[DD3]
SHEET 08	OF 10

CALL 48 HOURS BEFORE YOU DIG
1-800-553-4344
"It's the Law"
NORTHWEST UTILITIES NOTIFICATION CENTER

MICHAEL G. SZWAYA — STATE OF WASHINGTON — 37659 — REGISTERED PROFESSIONAL ENGINEER — EXPIRES: OCTOBER 21, 2005

ENVIRONMENTAL SERVICES DIVISION
STORMWATER AND WATERSHED RESOURCES SECTION

GABBERT MITIGATION
DRAINAGE DETAILS

proud past, promising future
CLARK COUNTY WASHINGTON

NOTES:

1. CONTRACTOR TO INSTALL TEMPORARY CONSTRUCTION ENTRANCE WITH DIVERSION BERM FOR VEHICLE WASHDOWN ZONE.
2. CONTRACTOR TO INSTALL TEMPORARY SILT FENCE IN DOWN SLOPE AREAS.
3. CONTRACTOR TO PLACE TEMPORARY BIOBAGS ALONG EXISTING ROADSIDE DITCH ON WEST SIDE OF NE 29TH AVE.
4. CONTRACTOR TO RESTORE ALL AREAS AND REMOVE TEMPORARY STRUCTURES FOLLOWING FINAL GRADING OF PROJECT AREA.
5. SIGNIFICANT VARIATION AND DEGREE OF EROSION CONTROL EFFORT WILL BE DICTATED BY WEATHER CONDITIONS. THE DEVELOPER AND CONTRACTOR SHOULD BE PREPARED TO PROVIDE EXTRA EROSION CONTROL PROVISIONS AND EFFORT DURING WINTER AND WET WEATHER CONDITIONS BEYOND THAT NORMALLY REQUIRED DURING SUMMER AND DRY WEATHER CONDITIONS. FINE GRAINED AND UNCONSOLIDATED SOILS ON SLOPING SITES MAY BECOME UNSTABLE WHEN SUBJECT TO EXCESSIVE MOISTURE.

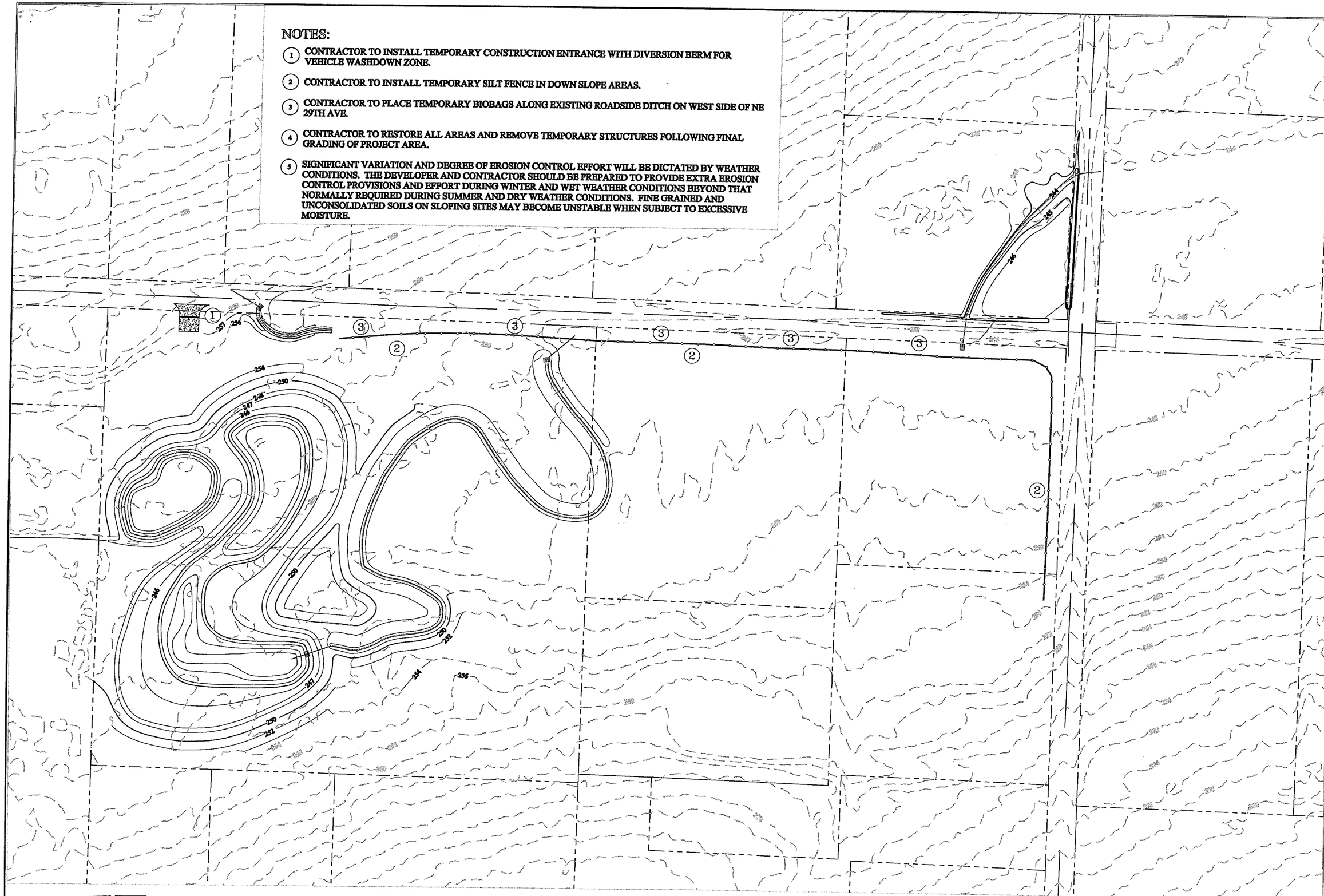

HALF SCALE SET: FOR REVIEW ONLY

50% DESIGN: FOR REVIEW ONLY

DESIGNED	MGS
DRAWN	KAL
CRP	400291
HOR.	1"=60'
VERT.	N/A
DATE	8/16/04
DWG:	GABBERT[EC1]

CALL 48 HOURS BEFORE YOU DIG
1-800-553-4344
"It's the Law"
NORTHWEST UTILITIES NOTIFICATION CENTER

MICHAEL G. SZWAYA
STATE OF WASHINGTON
37659
REGISTERED PROFESSIONAL ENGINEER
EXPIRES: OCTOBER 21, 2005

ENVIRONMENTAL SERVICES DIVISION
STORMWATER AND WATERSHED RESOURCES SECTION

GABBERT MITIGATION
EROSION CONTROL PLAN

proud past, promising future
CLARK COUNTY
WASHINGTON

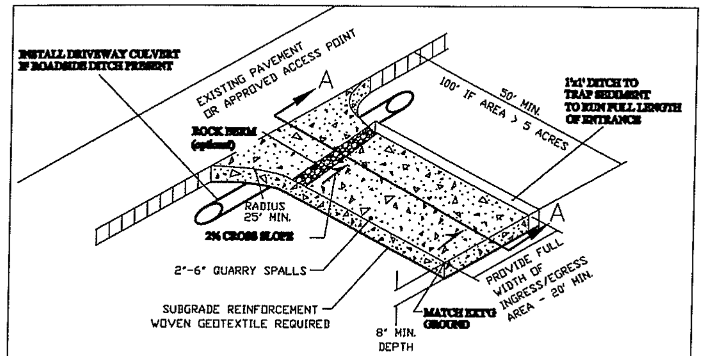

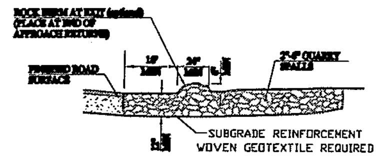

1. EXCAVATE MINIMUM OF 12" OF EXISTING SOILS.
2. PLACE MINIMUM OF 12" OF 2"-6" QUARRY SPALLS
3. CONSTRUCT ROCK BERM ALONG TRANSITION POINT TO FINISH ROAD SURFACES, DIVERT RUNOFF TO ONSITE AREA (OPTIONAL).

SECTION A–A

NOTES:

1. FOR DEVELOPMENT PROJECTS REVIEWED BY ENGINEERING SERVICES. NOT FOR USE WITH SINGLE FAMILY OR DUPLEX RESIDENTIAL BUILDING PERMITS. SEE BUILDING DEPT. FOR GRAVEL CONSTRUCTION ENTRANCE PLAN.

2. INSTALL WOVEN GEOTEXTILE FABRIC TO PREVENT SUB-SOIL PUMPING.

3. VEHICLE WASHDOWN AREA, IF REQUIRED, IS TO BE INSTALLED AND USED TO REMOVE SEDIMENT FROM VEHICLES THAT ARE ABOUT TO ENTER AN ESTABLISHED ROAD.

4. WASHDOWN AREA TO BE MADE UP OF CLEAN 2"- 6" QUARRY SPALLS, 1" DEEP (MIN) OVER WOVEN GEOTEXTILE FABRIC. WASHDOWN AREA TO BE FULL WIDTH OF ENTRANCE AND 50' (MIN.), AND 100' IF EXPOSED SOIL IS OVER 5 ACRES.

5. AT TIME OF PRECONSTRUCTION MEETING, THE COUNTY INSPECTOR MAY REQUIRE THE ENTRANCE TO BE PAVED TO THE EDGE OF THE RIGHT-OF-WAY PRIOR TO THE INSTALLATION OF A WASHDOWN ENTRANCE TO AVOID DAMAGE TO THE EXISTING ROADWAY.

6. THE RESPONSIBLE EROSION CONTROL INDIVIDUAL IS TO INSURE THAT ALL VEHICLES USE THIS ENTRANCE AND ARE TO BE INSPECTED AND CLEANED OF SOILS BEFORE LEAVING PROJECT, AND THAT THE ENTRANCE IS TO BE KEPT CLEAN AT ALL TIMES.

NO.	REVISIONS	DATE	BY

DWG: E-1.DWG

DEPARTMENT OF PUBLIC WORKS
CLARK COUNTY WASHINGTON
proud past, promising future

STANDARD CONSTRUCTION ENTRANCE
APPROVED
COUNTY ENGINEER 01/01/04 DATE
STANDARD E-1 PLAN No.
DESIGNED SCH
DRAWN SCH
DATE 07/07/03

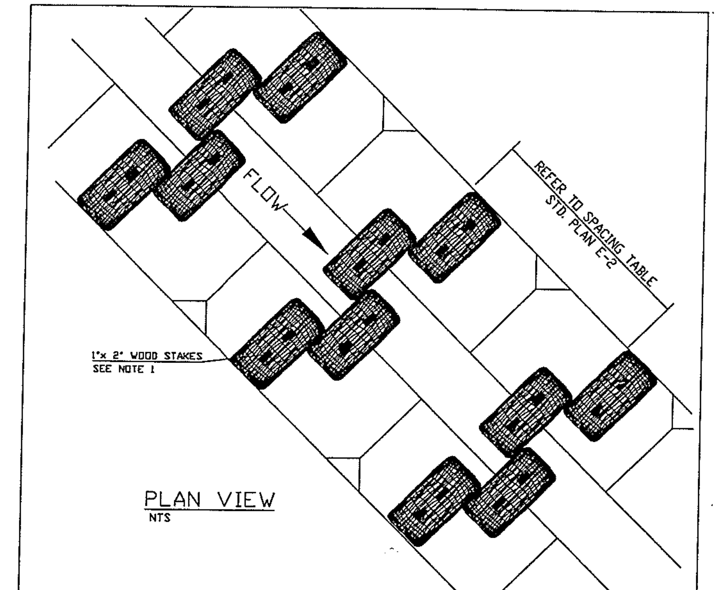

PLAN VIEW
NTS

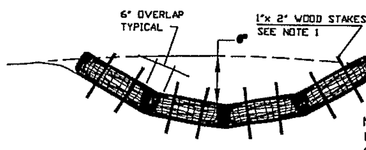

PROFILE
NTS

NOTES:
1. STAKING OF BAGS REQUIRED USING (2) 1"X2" WOOD STAKES OR APPROVED EQUAL PER BAG.
2. SURFACE MUST BE SMOOTH BEFORE APPLICATION.
3. SEE CHECK DAM NOTES STD. PLAN E-2

NO.	REVISIONS	DATE	BY

DWG: E-2a

DEPARTMENT OF PUBLIC WORKS
CLARK COUNTY WASHINGTON
proud past, promising future

BIO-FILTER BAG CHECK DAM
APPROVED
COUNTY ENGINEER 01/01/04 DATE
STANDARD E-2a PLAN No.
DESIGNED SCH
DRAWN SCH
DATE 08/07/02

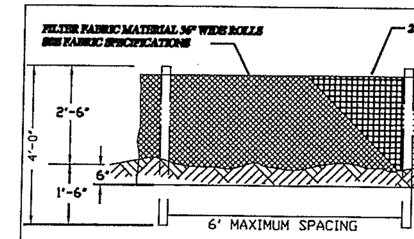

FRONT VIEW
NTS

SEDIMENT FENCE FABRIC SPECIFICATIONS
(Woven Polypropylene sediment fence fabric)

PROPERTY	TEST PROCEDURE	MIN. FABRIC VALUE
Grab Tensile Strength	ASTM D-4632	180 lbs.
Grab elongation	ASTM D-4632	15%
Trapezoid Tear	ASTM D-4533	70 lbs.
Mullen Burst	ASTM D-3786	300 psi.
Puncture	ASTM D-4833	50 lbs.
Permittivity	ASTM D-4491	0.05 sec-1
Permeability	ASTM D-4491	.005 cm/sec
A.O.S.	ASTM D-4751	30 U.S. Sieve
UV Resistance(500 hrs)	ASTM D-4355	90%

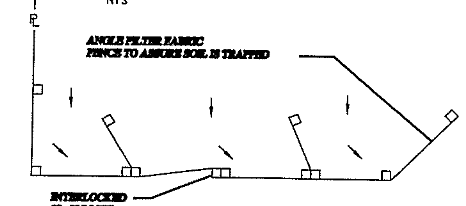

PLAN VIEW
NTS

NOTES
1. THIS SEDIMENT BARRIER UTILIZES STANDARD STRENGTH OR EXTRA STRENGTH SYNTHETIC FILTER FABRICS, IT IS DESIGNED FOR SITUATIONS IN WHICH ONLY SHEET OR OVERLAND FLOWS ARE EXPECTED. (SEE FABRIC SPECIFICATIONS ABOVE)
2. BURY BOTTOM OF FILTER FABRIC 6" VERTICALLY BELOW FINISHED GRADE.
3. POST ARE TO BE 2"x2" FIR, PINE OR STEEL FENCE POSTS.
4. POST TO BE INSTALLED ON UPHILL SIDE OF SLOPE.
5. COMPACT BOTH SIDES OF FILTER FABRIC TRENCH.
6. SEDIMENT FENCE TO BE SPACED ON SLOPES PER TABLE BELOW.

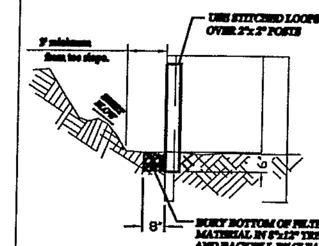

PROFILE
NTS

INSTALL PARALLEL ALONG CONTOURS AS FOLLOWS

% SLOPE	SLOPE	MAX. SPACING ON SLOPE
10% FLATTER	10:1 OR FLATTER	300 ft.
10<%<15	10:1>x<7.5:1	150 ft.
15<%<20	7.5:1>x<5:1	100 ft.
20<%<30	5:1>x<3.5:1	50 ft.
30<%<50	3.5:1>x<2:1	25 ft.

NO.	REVISIONS	DATE	BY

DWG: E-4.DWG

DEPARTMENT OF PUBLIC WORKS
CLARK COUNTY WASHINGTON
proud past, promising future

STANDARD SEDIMENT FENCE
APPROVED
COUNTY ENGINEER 01/01/04 DATE
STANDARD E-4 PLAN No.
DESIGNED SCH
DRAWN SCH
DATE 07/07/03

STANDARD NOTES FOR EROSION CONTROL PLAN

1. The Contractor shall install and maintain BMP's as shown and perform all actions necessary to prevent erosion, and control sediment from leaving the construction site. Site Contractor shall comply with Clark County Code Chapter 40.380.050.

2. All erosion control measures shall be in-place and in working condition prior to disturbing and exposing any soil surfaces (i.e. silt fence, construction entrance, sedimentation barriers, sedimentation traps).

3. All erosion prevention and control BMP's shall be maintained and repaired as needed to insure continued performance of their intended function. Needed repairs shall be made as soon as practicable. They are to remain in place and operational during all phases of construction. Construction activities shall not continue or resume until repairs to erosion control facilities are made and the facilities are functional. Any sediment leaving the site or discharging to a sensitive area shall be stopped and controlled immediately. Contaminated areas shall be cleaned and restored.

4. Clearing limits and work area limits shall be delineated and marked. Do not disturb more area than needed for construction requirements.

5. All sensitive or critical areas (wetlands, steep slopes, natural waterways), and buffers shall all be clearly delineated and clearly marked, and protected from sediment deposition.
6. Sediment laden runoff shall be prevented from entering all existing storm water catch basins and inlets affected by construction.

7. No exposed, bare soils shall remain unstabilized for more than two days during the period October 1 thru April 30 or for more than seven days during the period of May 1 through September 30. All disturbed soil surfaces shall be stabilized by a suitable application of "Best Management Practices".

8. Where feasible, no more than 500 feet of trench shall be open at one time. Excavated material shall be placed on the up-hill side of trenches provided it does not conflict with safety requirements.

9. Dewatering devices shall discharge into a sediment trap or sediment pond. No discharge shall be made to a paved street or stormwater collection system without first removing sediment.

10. Cut and fill slopes shall be constructed in a manner that will minimize erosion. Erosion shall be controlled and prevented by such measures as roughening the surface, installation of interceptor ditches, terracing, covering with matting, mulch or plastic sheeting. Runoff shall be prevented from entering a slope and from undercutting the base of slopes.

11. Any soil or debris transported onto roadways and sidewalks shall be removed. Deposits shall be completely removed by shoveling and/or sweeping. Washing shall not be utilized unless specifically approved in writing by the County.

12. All permanent infiltration systems shall be isolated and protected from sediment laden runoff entering to avoid risk of reducing the ability of the systems to infiltrate. Isolation and protection shall not be removed until the drainage area tributary to the system is completely stabilized.

CONTINUED ON SHEET 2

NO.	REVISIONS	DATE	BY

DWG: ECN1.DWG

DEPARTMENT OF PUBLIC WORKS
CLARK COUNTY WASHINGTON
proud past, promising future

STANDARD NOTES FOR EROSION CONTOL PLAN
APPROVED
COUNTY ENGINEER 01/01/04 DATE
STANDARD ECN1 PLAN No.
DESIGNED SCH
DRAWN SCH
DATE 08/02/02

STANDARD NOTES FOR EROSION CONTROL PLAN (CONTINUED)

13. All conveyance channels, both temporary and permanent shall be stabilized to prevent erosion of the channel. Stabilization shall extend to areas at outlets and downstream reaches vulnerable to erosion resulting from flow discharging from the channel.

14. If BMP's shown are utilized but are insufficient to prevent sediment from reaching water bodies, adjacent properties, or public rights-of-way; additional BMP's shall be implemented immediately to prevent further encroachment of sediment.

15. Stabilized areas shall be provided for employee parking and storage of construction materials. Erodable stockpiles of earthen materials, such as topsoil, silty and clayey soils; and landscape materials, shall be covered when not being incorporated in the work. Erosion control BMP's shall be utilized as necessary to prevent sediment laden runoff from leaving or sediment being transported from these areas from vehicle activity.

16. All pollutants other than sediment that occur during construction shall be handled and disposed of in a manner that does not cause contamination of storm water.

17. The Contractor shall keep an inspection log of the condition of the erosion control facilities. Erosion control facilities shall be inspected at least weekly and after each rainfall. The inspection log shall be kept at the project site at a designated location and shall be available for review by the County. An individual that has successfully completed the County's Erosion Control Certification course shall perform inspections and maintain the log.

18. All temporary BMP's shall be removed within 30 days after final site stabilization is achieved. Trapped sediment shall be deposited and stabilized on site. Areas disturbed resulting from removal shall be permanently stabilized.

19. Construction shall not be considered complete and acceptable until all disturbed soil surfaces have been protected from erosion with permanent landscaping, covering with impervious surfaces, restored to original undisturbed condition or permanently stabilized.

20. Vegetated stabilization and landscaping shall be fertilized, watered and maintained to insure that growth of vegetation is established and sustained.

21. During dry weather construction periods the contractor shall provide project-specific dust control measures that may include: Seeding, Mulching, Matting, Water, Tackifier, or Chemical Soil Stabilizers. The contractor shall maintain the dust control measures through dry weather periods until all disturbed areas have been stabilized. Immediately re-stabilize areas disturbed by contractor's operations or other activities (wind, water, vandalism, etc.).

22. Entry onto the construction site shall be restricted to a single approved entrance as shown on the plan.

23. Maintenance and repair of heavy equipment and vehicles which involve potential contaminants (oil,solvents,hydraulic fluid, etc.) must be conducted in a manner which prevents contamination of soils, surface water and ground water. Tarps, drip pans, or other appropriate measures shall be used as necessary.

24. Stripping, topsoil, and unsuitable material stockpiles shall be hydroseeded with "regreen wheat x wheat grass hybrid" by Hobbs and Hobkins (or approved equal). Maintenance of stockpile areas and reapplication of hydroseed covering shall be required if bare soil is present. During winter and wet weather conditions, stockpiles shall be covered with plastic sheeting per detail E-16.

SHEET 2 OF 2

NO.	REVISIONS	DATE	BY

DWG: ECN2.DWG

DEPARTMENT OF PUBLIC WORKS
CLARK COUNTY WASHINGTON
proud past, promising future

STANDARD NOTES (CONTINUED) FOR EROSION CONTOL PLAN
APPROVED
COUNTY ENGINEER 01/01/04 DATE
STANDARD ECN2 PLAN No.
DESIGNED SCH
DRAWN SCH
DATE 07/22/03

HALF SCALE SET: FOR REVIEW ONLY

50% DESIGN: FOR REVIEW ONLY

DESIGNED	MGS
DRAWN	KAL
CRP	400291
HOR.	N/A
VERT.	N/A
DATE	8/16/04
DWG:	GABBERT[EC2]
SHEET 10	OF 10

CALL 48 HOURS BEFORE YOU DIG
1-800-553-4344
"It's the Law"
NORTHWEST UTILITIES NOTIFICATION CENTER

MICHAEL G. SZWAYA
STATE OF WASHINGTON
37859 REGISTERED PROFESSIONAL ENGINEER
EXPIRES: OCTOBER 21, 2005

ENVIRONMENTAL SERVICES DIVISION
STORMWATER AND WATERSHED RESOURCES SECTION

GABBERT MITIGATION
EROSION CONTROL NOTES AND DETAILS

CLARK COUNTY WASHINGTON
proud past, promising future