KINGS POND NEIGHBORHOOD PARK

ROAD IMPROVEMENTS AND PARK CONSTRUCTION

PLANS FOR THE CONSTRUCTION OF
PARKS IMPROVEMENTS

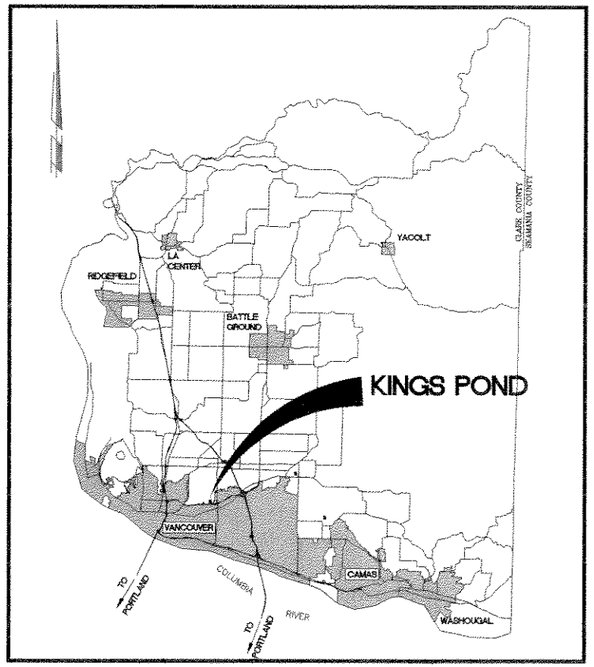

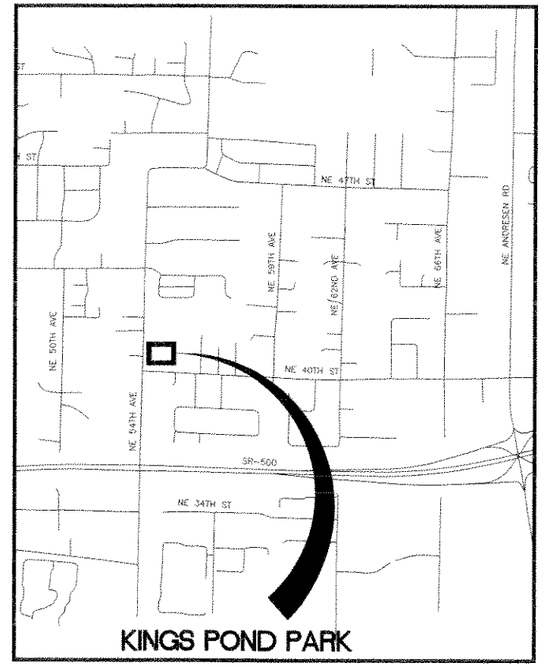

#400733

MICHAEL M. EMRICH
STATE OF WASHINGTON
29600
REGISTERED
PROFESSIONAL ENGINEER
EXPIRES MAY 26, 2009

3-28-2008

COMMISSIONERS:

BETTY SUE MORRIS, Chair
MARC BOLDT, Commissioner
STEVE STUART, Commissioner

Quality Assurance	Project Manager	PW Director/ County Engineer
4/1/08 DATE:	DATE:	3/31/08 DATE:
Tom Grange, P.E.	Jerry Barnett, P.E.	Peter Capell, P.E.

proud past, promising future
CLARK COUNTY
WASHINGTON

DEPARTMENT OF
PUBLIC WORKS

ENGINEERING PROGRAM- DESIGN SECTION

VANCOUVER- CLARK PARKS AND RECREATION

VANCOUVER-CLARK PARKS & Recreation

CLARK COUNTY, WASHINGTON

LOCATION MAP

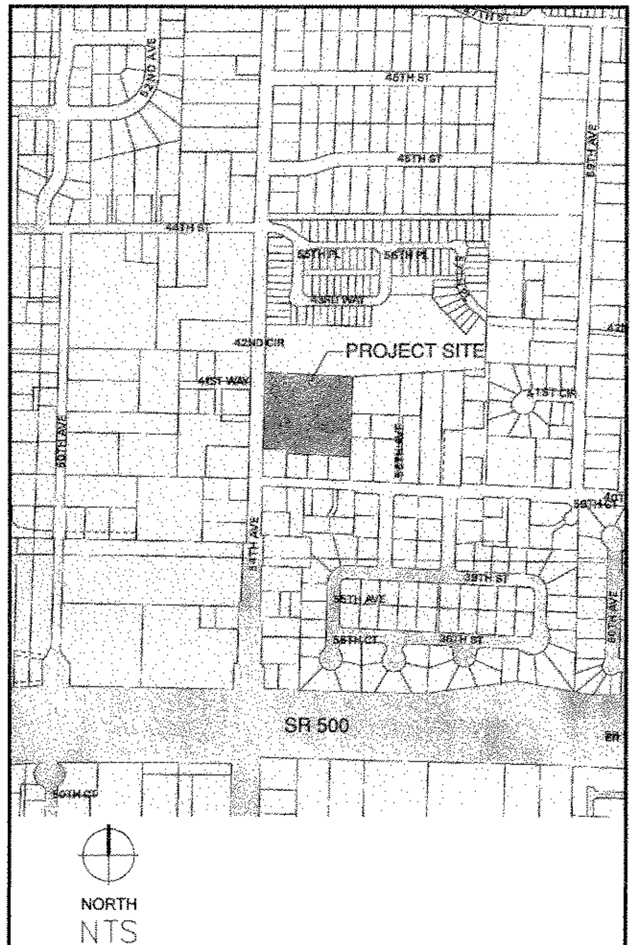

CONTACT

CLARK COUNTY PUBLIC WORKS
P.O. Box 9810, Vancouver, WA 98666-9810
(360) 397-6118 EXT. 4969
PROJECT MANAGER: JERRY BARNETT
PROJECT #

CALL 2 BUSINESS DAYS BEFORE YOU DIG
696-4848
"It's the Law"
CLARK COUNTY UTILITIES COORDINATING COUNCIL

OWNER

CLARK COUNTY, WASHINGTON

PROJECT TEAM

CLARK COUNTY PUBLIC WORKS
P.O. Box 9810, Vancouver, WA 98666-9810
(360) 397-6118 EXT. 4969
PROJECT MANAGER: JERRY BARNETT

VANCOUVER-CLARK PARKS AND RECREATION
610 ESTHER STREET
VANCOUVER, WA.
PROJECT MANAGER: RYAN WESTON

APPROVALS

CLARK COUNTY
DEPARTMENT OF COMMUNITY DEVELOPMENT
ENGINEERING SERVICES

PLANNING LAND USE# PSR 2007- 00060
ENGINEERING# ENG ENG2008 -00007
INSPECTION# ______

Recommended For Approval

Signature		Date
(signature)	Clark County Fire Marshal	4/9/08
(signature)	Clark County Wetlands Biologist Case#	4/10/08
(signature)	Clark County Habitat Biologist Case#	4/10/08
(signature)	Clark County Grading Review	4/8/08
(signature)	Clark County Erosion Control Review	4/8/08
(signature)	Clark County Storm Water Plan Review	4/8/08
(signature)	Clark County Transportation Review	4/8/08

A	N/A	
■	☐	Stormwater & Erosion Control Ordinance CCC 13.29
■	☐	Transportation Standards Ordinance CCC 12.05A
☐	■	Transportation Landscaping Review
☐	■	Utility Review CCC 13.12A & 12.20A
☐	■	Clark County Signing & Striping
■	☐	Road Modification CCC 12.05A.660
☐	■	CARA CCC 13.70
☐	■	Geological Hazard Areas Reg. CCC 13.60
☐	■	Flood Plain Combining District CCC 18.327
☐	■	Sewer and Water on Plan
☐	■	Clark County M & O Pavement Defl. Testing
☐	■	Private Stormwater Covenant
☐	■	Record Drawing Guarantee
■	☐	~~UBC Chapter 33~~ IBC APPENDIX J

RECOMMENDED for APPROVAL
(signature) 4-10-2008
Engineering Team Leader — Date

APPROVED for CONSTRUCTION
(signature) 4-10-2008
Clark County Engineer — Date

Plans Approved for Construction by the County does not in any way relieve the engineer of responsibility to meet all requirements of the County or obligation to protect life, health, and property of the public. The plan for any project shall be revised or supplemented at any time it is determined that the full requirements of the County have not been met.

Rev. 11/12/03

GENERAL CONSTRUCTION NOTES

1. All construction shall be in accordance with the Clark County Code (CCC), Clark County Street and Road Standards (CCSRS), Clark County Standard Details Manual (CCSDM) and the Land Use Conditions of Approval. It shall be the sole responsibility of the applicant and the professional civil engineer to correct any error, omission, or variation from the above requirements found in these plans.
2. Approval of roadways, grading, erosion Control and drainage plan by Clark County does not constitute an approval of any other construction (e.g., domestic water conveyance, sewer conveyance, gas, electrical, etc.).
3. Before any construction or development activity, a preconstruction meeting must be held between the Department of Community Development, Engineering Services (DCDES) Construction Inspection Section of the Engineering Services Division, the Applicant, and the Applicant's Consulting Engineer and Construction Representatives.
4. A copy of these approved plans must be on the job site whenever construction is in progress.
5. Construction noise shall be limited in accordance with the Nuisance Ordinance CCC 9.14.010(3); normally, this is 7a.m. to 10 p.m. seven days a week.
6. It shall be the Applicant's/Contractor's responsibility to obtain all construction easements and/or right of entries prior to construction work.
7. All franchised utilities (i.e. gas, electric, phone) or other installations that are not shown on these approved plans shall not be constructed unless an approved set of plans that meets all requirements of CCSRS (CCC 40.350.030) is submitted to the DCDES Construction Inspection Section three days prior to construction.
8. Datum shall be Clark County Datum NGVD 1929(47) unless otherwise approved by DCDES.
9. All utility trenches shall be backfilled and compacted to 95 percent maximum density as determined by AASHTO T-99, within the roadway prism (CCC40.350.030(C)(4)(e).
10. All roadway subgrade within the roadway prism shall be backfilled and compacted to 95 percent maximum density as determined by AASHTO T-99 (WSDOT 2-06.3).
11. Open cutting of existing roadways is not allowed unless specifically approved by DCDES and noted on these approved plans. Any open cut shall be restored in accordance with Clark County Code (see Standard Trench Restoration Notes of Standard details Manual).
12. The Contractor shall be responsible for providing adequate safeguards, safety devices, protective equipment, flaggers, and any other needed actions to protect the life, health, and safety of the public, and to protect property in connection with the performance of work covered by the contractor. Any work within the traveled right-of-way that may interrupt normal traffic flow shall require at least one flagger for each lane of traffic affected. Section 1-07.23, "Traffic Control," of the WSDOT Standard Specifications shall apply in its entirety.
13. Storm Drain, Erosion Control, Trench Restoration, Grading, and Signing & Striping General Notes per Standard Plans D1.0, ECN1 and UGN respectively are made part of these notes, and are to be included in the construction plan set.

RECOMMENDED CONSTRUCTION SEQUENCE FOR EROSION CONTROL

1. Pre-construction meeting.
2. Flag or fence clearing limits.
3. Post Notice of Construction Activity sign with name and phone number of Erosion Sediment Control supervisor.
4. Install catch basin protection if required.
5. Grade and install construction entrance(s).
6. Install perimeter protection (silt fence, brush barrier, etc.).
7. Construct sediment ponds and traps.
8. Grade and stabilize construction roads.
9. Construct surface water controls (interceptor dikes, pipe slope drains, etc.) simultaneously with clearing and grading for project development.
10. Maintain erosion control measures in accordance with Clark County standards and manufacturer's recommendations.
11. Relocate surface water controls and erosion control measures or install new measures so that as site conditions change the erosion and sediment control is always in accordance with the Clark County Erosion and Sediment Control Standards.
12. Cover all areas that will be unworked for more than seven days during the dry season or two days during the wet season with straw, wood fiber mulch, compost, plastic sheeting or equivalent.
13. Stabilize all areas that reach final grade within seven days.
14. Seed or sod any areas to remain unworked for more than 30 days.
15. Upon completion of the project, all disturbed areas must be stabilized and best management practices removed if appropriate.

ABBREVIATIONS

&	And
@	At
℄	Centerline
PL	Property Line
%	Percent
#	Pound or Number
A.B.	Anchor Bolt
AC	Acre
A/C	Asphaltic Concrete
ADD-ALT	Added Alternate
AGGR.	Aggregate
ALT.	Alternate
APPROX.	Approximately
ASPH.	Asphalt
B&B	Balled and Burlapped
BC	Bottom of Curb
BIT.	Bituminous, Bitumen
BL	Baseline
BLDG.	Building
BLK.	Block
BM.	Bench Mark
B.O.C.	Back of Curb
BOT.	Bottom
BPA.	Bonneville Power Admin.
BS	Bottom of Stair
CAL.	Caliper
C.B.	Catch Basin
C.F.	Cubic Feet
C.J.	Control Joint
CLR.	Clear
CMP	Corrugated Metal Pipe
CMU.	Concrete Masonry Unit
CPU.	Clark Public Utilities
CONC.	Concrete
CONST.	Construction
CONT.	Continuous
COORD.	Coordinate
CTSK.	Countersunk
C.Y.	Cubic Yards
DET.	Detail
D.F.	Drinking Fountain
D.I.	Drain Inlet
DIA.	Diameter
DWG.	Drawing
E	East
EA.	Each
E.J.	Expansion Joint
EL.	Elevation
EQ.	Equal
EX.	Existing
EXIST.	Existing
EXP.	Exposed
FFE.	Finish Floor Elevation
F.G.	Finished Grade
F.H.	Fire Hydrant
FIN.	Finish
FIPT	Female Iron Pipe Thrd
F.O.C.	Face of Curb
FT.	Foot or Feet
FTG.	Footing
GA.	Gauge
GAL.	Gallon
GALV.	Galvanized
H.B.	Hose Bib
H/C	Handicap
HCAP.	Handicap
HDR.	Header
HORIZ.	Horizontal
H.P.	High Point
HT.	Height
HWY.	Highway
I.D.	Inside Diameter
I.E.	Invert Elevation
JT.	Joint
L.A.	Landscape Architect
L.F.	Linear feet
L.P.	Low Point, Light Pole
LT.	Light
MAX.	Maximum
M.B.	Machine Bolt
MED.	Medium
MEMB.	Membrane
MET.	Metal
MFR.	Manufacturer
MH.	Manhole
MIN.	Minimum
MIPT	Male Iron Pipe Thrd
MISC.	Miscellaneous
N	North
N.I.C.	Not in Contract
NO.	Number
N.T.S.	Not to Scale
O.C.	On Center
O.D.	Outside Diameter
OLA	Off Leash Area
OPP.	Opposite
P	Parking
P.A.	Planting Area
PAT.	Pattern
P.C.	Point of Curvature
P.O.B.	Point of Beginning
P.O.C.	Point of Connection
P.S.	Pipe Sleeve
P.T.	Point of Tangent, Pressure Treated
P.V.C.	Polyvinyl Chloride Pipe
R	Riser, Radius
RAD.	Radius
R.E.	Rim Elevation
REINF.	Reinforced, Reinforcing
REQD.	Required
R.O.W.	Right of Way
S	South
S.F.	Square Feet
SHT.	Sheet
SPA.	Spaces
SPECS.	Specifications
SQ.	Square
STL.	Steel
SLV.	Sleeve
T	Tread
TC	Top of Curb
T.J.	Tooled Joint
TP	Top of Pavement
TS	Top of Stair
TW	Top of Wall
TYP.	Typical
U.N.O.	Unless Noted Otherwise
VERT.	Vertical
V.I.F.	Verify In Field
W	West
W/	With
W/O	With Out
WPF.	Waterproof
W.W.M.	Welded Wire Mesh

PLANS FOR PROPOSED
KINGS POND NEIGHBORHOOD PARK
4019 NE 54TH AVE.
VANCOUVER, WASHINGTON 98661

SHEET INDEX

G0-00	COVER SHEET
G1-01	EXISTING CONDITIONS & TREE PROTECTION PLAN
C0-01	LEGEND AND GENERAL NOTES
C1-01	ROADWAY REMOVAL & TYPICAL SECTIONS
C2-01	PLAN AND PROFILE
C2-02	SIGNING & STRIPING
C4-01	EROSION CONTROL & PARK DRAINAGE
C7-01	ROADWAY DETAILS
C7-02	EROSION CONTROL NOTES
L2-01	CONSTRUCTION PLAN
L3-01	GRADING PLAN
L4-01	LAYOUT PLAN
L4-02	ENTRANCE AREA ENLARGEMENT PLANS
L4-03	PLAY AREA ENLARGEMENT PLANS
L5-01	PLANTING PLAN
L5-02	PLANTING QUANTITIES
L5-03	PLANTING DETAILS
L6-01	IRRIGATION PLAN
L6-02	IRRIGATION DETAILS
L6-03	IRRIGATION DETAILS
L6-04	ELECTRICAL BOX NOTES
L7-01	SURFACING DETAILS
L7-02	SITE FEATURES DETAILS
L7-03	SITE FURNISHINGS DETAILS
L7-04	SITE FURNISHINGS DETAILS
L7-05	PLAY AREA DETAILS
L7-06	PLAY AREA DETAILS

I:\Design\PARKS-NEIGHBORHOOD\033823 Kings Pond\Drawings\SHEETS\KP G0-00.dwg

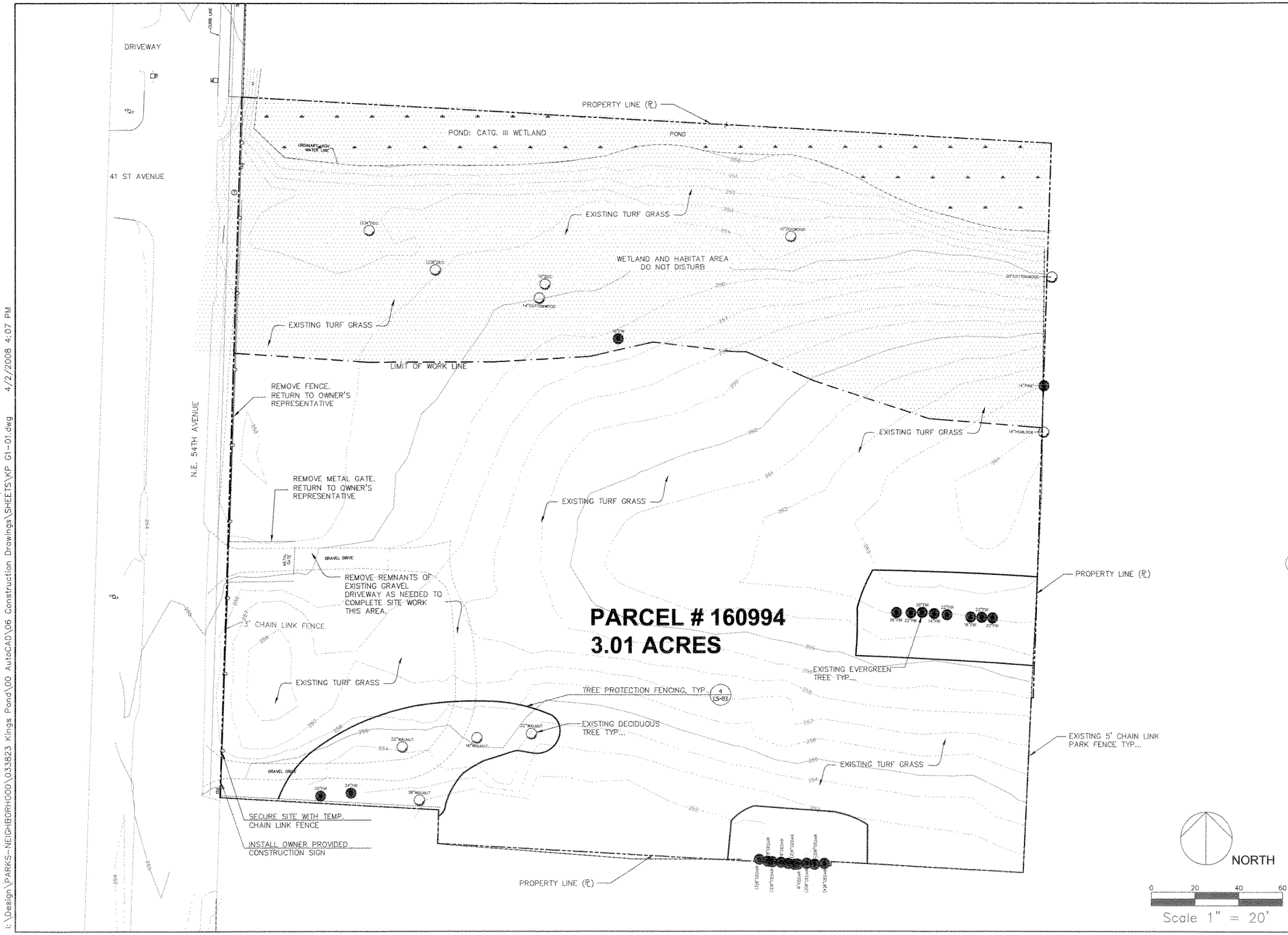

VANCOUVER-CLARK
PARKS & Recreation

KINGS POND NEIGHBORHOOD PARK

OWNER:
CLARK COUNTY
Vancouver, Washington

CONTACT:
JERRY BARNETT, CLARK COUNTY PUBLIC WORKS
Vancouver, Washington (360) 397-6118 EXT.4969

STATE OF WASHINGTON REGISTERED LANDSCAPE ARCHITECT
JEAN K. AKERS
CERTIFICATE NO. 1060

SHEET TITLE
EXISTING CONDITIONS & TREE PROTECTION PLAN

DATE 1/11/08
SCALE 1" = 20'-0"
JOB #
DWG BY: GA
CKD BY: AS

REVISIONS

SHEET NO.
G1-01

I:\Design\PARKS-NEIGHBORHOOD\033823 Kings Pond\00 AutoCAD\06 Construction Drawings\SHEETS\KP G1-01.dwg 4/2/2008 4:07 PM

LEGEND

TRAFFIC SIGNAL INTERCONNECT AND LIGHTING SYMBOLS

TRAFFIC SIGNAL SYMBOLS EXISTING	TRAFFIC SIGNAL SYMBOLS PROPOSED	DESCRIPTION
		SIGNAL STANDARD (TYPE III)
		LUMINAIRE STANDARD (TYPE IV)
		SIGNAL STANDARD (TYPE I)
		P-1 CONTROLLER CABINET (TYPE I ELEC. SERVICE
		JUNCTION BOX (TYPE I)
		JUNCTION BOX (TYPE II)
		JUNCTION BOX (TYPE III)
		TRAFFIC SIGNAL HEAD W/ARROW INDICATOR
		TRAFFIC SIGNAL HEAD
		PEDESDTRIAN SIGNAL DISPLAY
		OPTICAL PREEMPTION DETECTOR
		MAST ARM MOUNTED SIGN
		CAPPPED TENON
		CPU POWER POLE
		RIGID METAL CONDUIT
		RIGID (PVC) CONDUIT
S	S	SIGNAL STANDARD NUMBER
X	X	CONSTRUCTION NOTE
X	X	WIRE NOTE

STORM/SANITARY SYMBOLS

SYMBOLS EXIST.	SYMBOLS PROP.	DESCRIPTION
		CURB INLET (CI)
		CATCH BASIN (CB)
		COMBINATION CURB INLET (CCI)
		STORM MANHOLE (MH)
SAN	SAN	SANITARY SEWER (MH)
CL	CL	CLEAN OUT

WATER SYMBOLS

SYMBOLS EXIST.	SYMBOLS PROP.	DESCRIPTION
		FIRE HYDRANT
		WATER METER
		WATER VALVE
		SPRINKLER HEAD
		WELL
		TEE
		CROSS
		THRUST BLOCK
		THRUST BLOCK
		PLUG

GENERAL LINETYPES

LINETYPE EXISTING	LINETYPE PROPOSED	DESCRIPTION
		EDGE OF PAVEMENT
		CURB LINE
		SIDEWALK FRONT
		SIDEWALK BACK
		CENTER LINE
X X X	X X X	FENCE LINE
T	T	TELEPHONE LINE
TV	TV	TELEVISION LINE
W	W	WATER LINE
E	E	UNDERGROUND ELECTRIC
OHE	OHE	OVERHEAD ELECTRIC
S	S	SANITARY SEWER LINE
STM	STM	STORM DRAINAGE
G	G	GAS LINE
	IC	INTERCONNECT LINE
FIBER	FIBER	FIBER OPTIC LINE
		STORM/CULVERT LINE
		DITCH CENTER LINE
		GUARDRAIL
WB	WB	WETLAND BOUNDARY
		ROW LINE
		EASEMENT LINE
		PRPERTY LINE
F F	F	FILL LIMITS
C C	C	CUT LIMITS
		SAWCUT LINE
		PERMANENT SLOPE EASEMENT
SF SF	SF	EROSION CONTOL SILT FENCE
GATE GATE	GATE GATE	GATE

OTHER UTILITY SYMBOLS

SYMBOLS EXIST.	SYMBOLS PROP.	DESCRIPTION
		TRANSFORMER
		ELEC TOWER
		LIGHT
		GUY ANCHOR
		POWER POLE
		SIGNAL POLE
		JUNCTION BOX
		TELEPHONE MANHOLE
		TELEPHONE POLE
		TELEPHONE PEDESTAL
		TELEPHONE VAULT
		TELEVISION BOX
		GAS VALVE

OTHER GENERAL SYMBOLS

SYMBOLS	DESCRIPTION
	NEW SIDEWALK
#	CONSTRUCTION NOTE
A × B C	SURVEY TOPO SHOT A = POINT ID B = POINT DESCRIPTION C = POINT ELEVATION
	SURVEY TRAVERSE POINT
	TEST HOLE
	BIKE LANE STRIPING
	ROADWAY TURN ARROW STRIPING
	FLOW ARROW

CURB RETURN/CURVE DATA

R= Δ= L= T= C=

R = CURVE RADIUS
Δ = CURVE DELTA ANGLE
L = CURVE LENGTH
T = CURVE TANGENT
C = CURVE CHORD LENGTH

CX CURVE TABLE

RETURN INFORMATION		?
X1	BCR	E1
X2	1/4 Δ	E2
X3	1/2 Δ	E3
X4	3/4 Δ	E4
X5	ECR	E5

SURFACE/LANDSCAPE SYMBOLS

SYMBOLS EXIST.	SYMBOLS PROP.	DESCRIPTION
		SHRUB
		CONIFEROUS TREE
		DECIDUOUS TREE
		DECIDUOUS TREE
		BRUSH LINE
		HEDGE
		SIGN
US	MB	MAIL BOX

EROSION CONTROL/DEMOLITION SYMBOLS

SYMBOLS	DESCRIPTION
	ROADWAY REMOVAL
	PLANING/MILLING AND OVERLAY
	EROSION CONTROL SEEDING & MULCHING
IP	EROSION CONTROL INLET PROTECTION
	STRAW WATTLES

GENERAL NOTES

1. SURVEY DATUM PER CLARK COUNTY.

2. EXISTING UTILITIES SHOWN ON THE PLANS ARE PER SURFACE LOCATIONS AND RECORD DRAWINGS. NO POTHOLING WAS COMPLETED. THE CONTRACTOR SHALL FIELD VERIFY LOCATIONS OF ALL EXISTING UTILITIES PRIOR TO CONSTRUCTION. IF CONFLICT EXISTS, NOTIFY THE ENGINEER AND UTILITY COMPANY. PROCEED ONLY AS DIRECTED AND PER STANDARD POLICY AND REGULATIONS (INCIDENTAL TO COST OF STORM SEWER PIPE).

3. CONSTRUCTION SURVEY SHALL BE PROVIDED AT NO COST TO THE CONTRACTOR. HOWEVER, THE CONTRACTOR WILL BE RESPONSIBLE FOR REPLACING NEEDED SURVEY STAKES DESTROYED THROUGH NORMAL OPERATIONS, NEGLIGENCE, OR INATTENTION. AS-BUILT SURVEY SHALL BE PROVIDED BY THE CONTRACTOR.

4. AT THE END OF EACH DAY, THE CONTRACTOR SHALL CLEAN UP THE PROJECT AREA AND LEAVE IT IN A NEAT AND SECURED MANNER. UPON COMPLETION, THE CONTRACTOR SHALL LEAVE THE PROJECT AREA FREE OF DEBRIS AND UNUSED MATERIAL.

5. IF EXISTING CONCRETE CURBS AND SIDEWALKS DESIGNATED TO REMAIN ARE DAMAGED, THEY WILL BE REMOVED AND REPLACED TO ORIGINAL CONDITION AT THE CONTRACTOR'S EXPENSE.

6. CONTRACTOR TO COORDINATE UTILITY RELOCATIONS WITH CLARK PUBLIC UTILITIES FOR POWER, CITY OF VANCOUVER FOR WATER, QWEST FOR TELEPHONE, NW NATURAL FOR GAS, COMCAST FOR CABLE TV, AND HAZEL DELL SEWER DISTRICT FOR SANITARY SEWER.

8. CONTRACTOR SHALL PROTECT EXISTING UTILITIES AND SERVICE LINES. ALL DISTURBED UTILITY LINES SHALL BE REPAIRED AS DIRECTED. THE CONTRACTOR SHALL BE RESPONSIBLE FOR THE REPAIR OF EXISTING UTILITY LINES OR STRUCTURES
DESTROYED THROUGH NEGLIGENCE AND/OR INATTENTION.

9. CONTRACTOR TO MAINTAIN INGRESS AND EGRESS FROM ALL PRIVATE PROPERTY DRIVEWAYS THROUGHOUT THE DURATION OF CONSTRUCTION.

10. CONTRACTOR SHALL FIELD VERIFY (POTHOLE) ALL POTENTIAL UTILITY CROSSINGS PRIOR TO CONSTRUCTION. IF DIRECT CONFLICT EXISTS, NOTIFY THE ENGINEER AND UTILITY COMPANY. PROCEED ONLY AS DIRECTED AND PER STANDARD POLICY AND REGULATIONS. (COST INCLUDED IN BID ITEMS FOR STORM SEWER AND CULVERT PIPE).

PHASING AND STAGING NOTES

1. THE PHASING, STAGING AND CONTROL OF WATER ARRANGEMENTS SHOWN ON THE PLANS ARE CONCEPTUAL ONLY. THE CONTRACTOR SHALL PROVIDE A DETAILED PHASING AND STAGING PLAN FOR REVIEW AND APPROVAL. THE CONTRACTOR MAY USE THIS PLAN SET AS A BASIS BUT IT CANNOT BE ADOPTED WITHOUT ADDITIONAL DETAIL AND NOTES (SEE SPECIAL PROVISIONS).

2. THE CONTRACTOR'S PLAN AND ALL PHASES OF WORK SHALL COMPLY WITH ALL PERMITS AND PERMIT CONDITIONS AT ALL TIMES. SEE THE PERMIT SUMMARY SECTION OF THE SPECIAL PROVISIONS FOR ADDITIONAL INFORMATION.

3. THE CONTRACTOR SHALL FINISH GRADE AND SEED ALL DISTURBED AREAS WITHIN (7) SEVEN DAYS OF INITIAL DISTURBANCE BETWEEN MAY 1 AND SEPTEMBER 20 AND WITHIN (2) TWO DAYS BETWEEN OCT 1 AND APRIL 30. NO EXCEPTIONS WILL BE PERMITTED.

4. CONTRACTOR SHALL BE RESPONSIBLE FOR STABILIZING, SEEDING AND MULCHING OF ALL DISTURBED AREAS IN ACCORDANCE WITH ALL PERMIT CONDITIONS. ADDITIONAL PLANTING (BY OTHERS) WILL BE COMPLETED FOLLOWING COMPLETION OF CONSTRUCTION.

MICHAEL M. LINDOR
STATE OF WASHINGTON
19030
REGISTERED
PROFESSIONAL ENGINEER
3-28-2008
EXPIRES: MAY 26, 2009

VANCOUVER-CLARK PARKS & Recreation

KINGS POND NEIGHBORHOOD PARK

OWNER:
CITY OF VANCOUVER
Vancouver, Washington

APPLICANT:
Vancouver-Clark Parks & Recreation Department
Vancouver, Washington (360) 696-8171

proud past, promising future
CLARK COUNTY WASHINGTON

SHEET TITLE
LEGEND & GENERAL NOTES

DATE 3/28/08
SCALE SEE SHEET
JOB #
DWG BY:
CKD BY: RK

REVISIONS

SHEET NO.
KP-C0-01

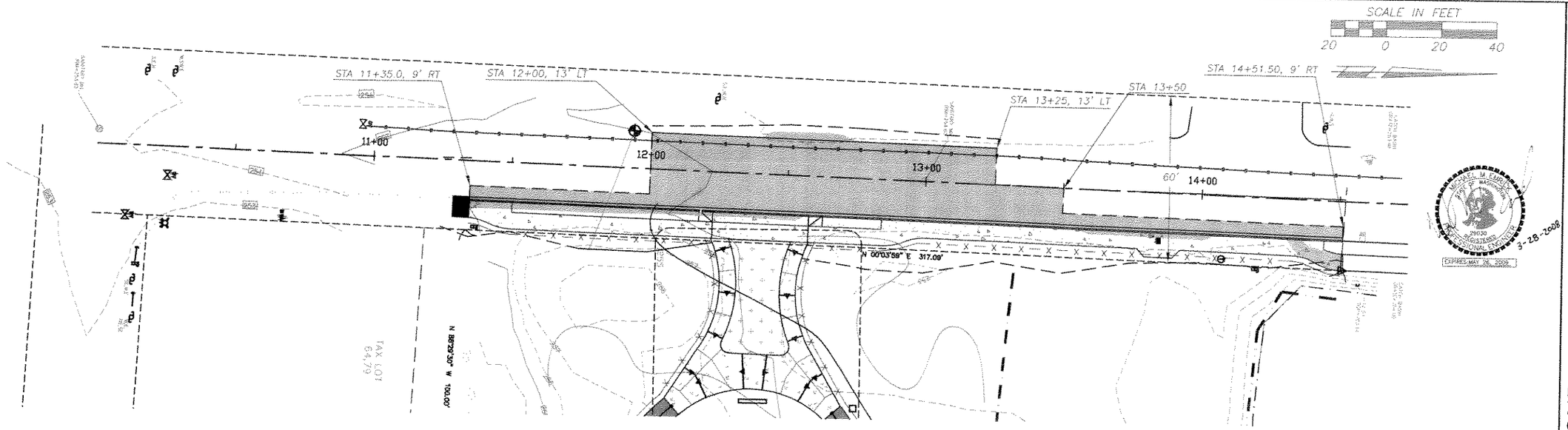

REMOVE EXT RDWY STRUCTURE TO LIMITS SHOWN. REPLACE PER TYPICAL SECTIONS AND PLAN LAYOUT

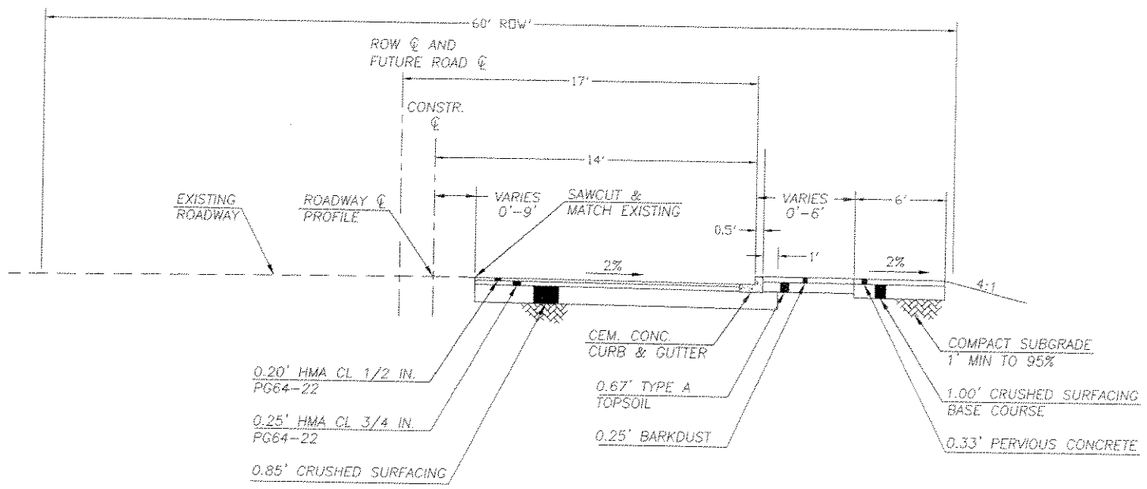

KINGS POND

NE 54TH AVE
STA 11+35 TO STA 12+00
STA 13+25 TO STA 14+51.50

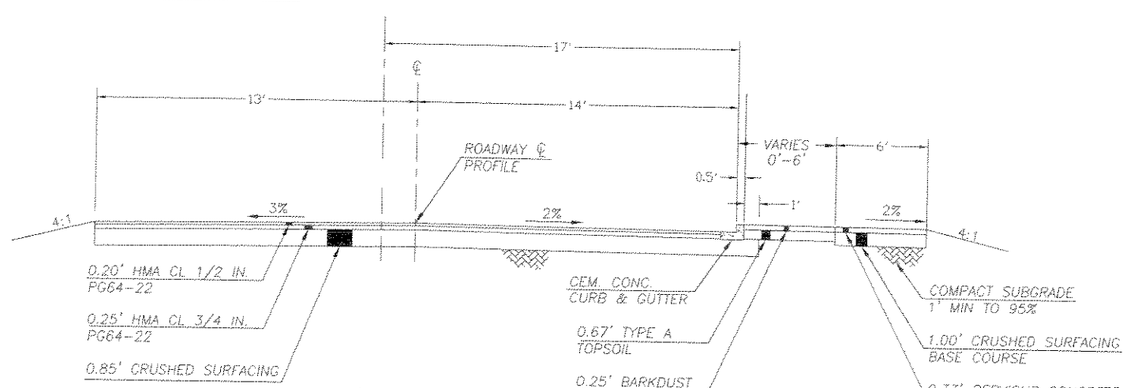

KINGS POND

NE 54TH AVE
STA 12+00 TO STA 13+25
N.T.S.

VANCOUVER-CLARK PARKS & Recreation

KINGS POND NEIGHBORHOOD PARK

OWNER:
CITY OF VANCOUVER
Vancouver, Washington

APPLICANT:
Vancouver-Clark Parks & Recreation Department
Vancouver, Washington (360) 696-8171

proud past. promising future.
CLARK COUNTY
WASHINGTON

SHEET TITLE
ROADWAY REMOVAL & TYPICAL SECTIONS

DATE 3/28/08
SCALE SEE SHEET
JOB #
DWG BY: RK
CKD BY:

REVISIONS

SHEET NO.

1. RELOCATE/REMOVE BY OTHERS
2. ADJUST MH RIM/CB GRATE TO FG
3. ADJUST VALVE COVER/METER BOX TO FG
4. REMOVE EXT CULVERT/DRAINAGE STRUCTURE
5. SAWCUT AND/OR MATCH EXT CURB AND/OR S/W.
6. RELOCATE EXIST MAILBOX TO STA LISTED. (TYPE 1, UNLESS OTHERWISE NOTED)
7. REMOVE EXT TREES, SHRUBS, BRUSH, ETC. TO LIMITS SHOWN (TYP.)

SCALE IN FEET

20 0 20 40

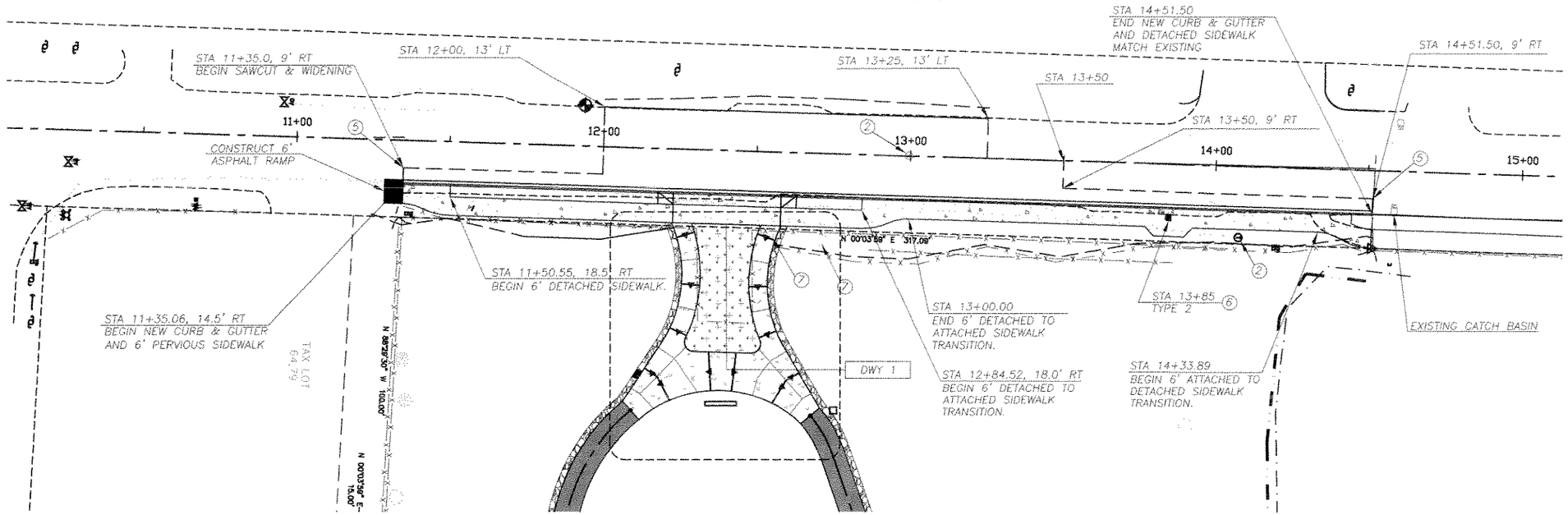

DRIVEWAYS

DWY 1
STA 12+40.7, 14' RT
CONST 35' CEM CONC
APPROACH TYPE 2
MATCH PARK ENTRANCE

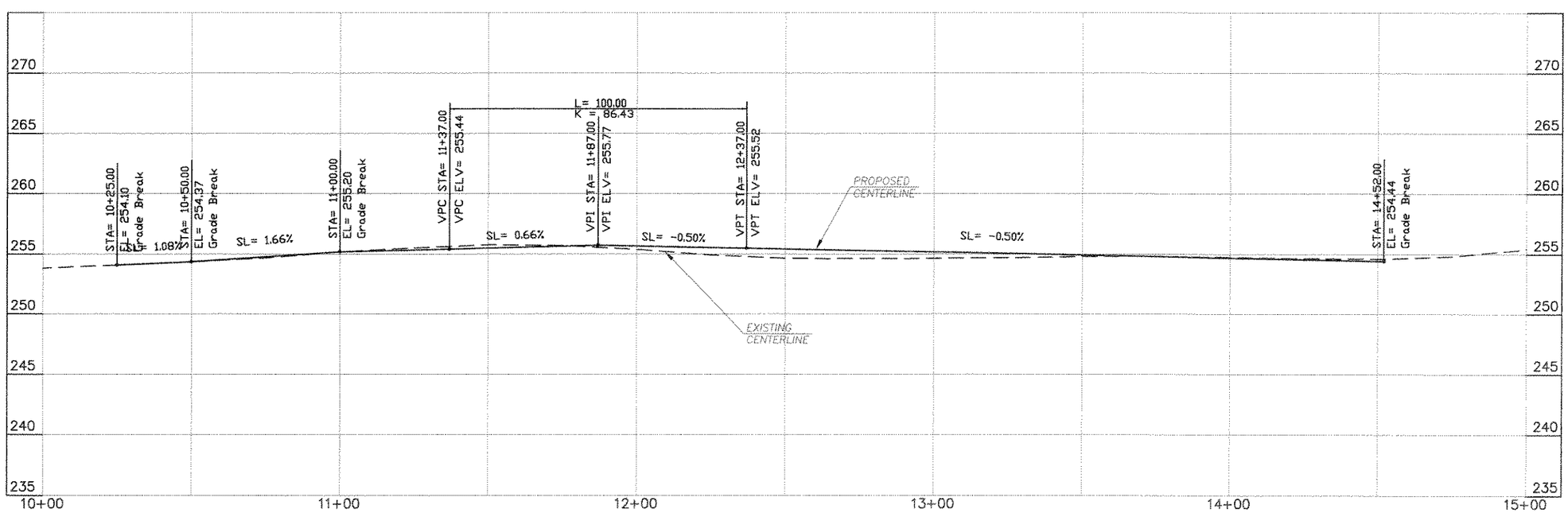

VANCOUVER-CLARK PARKS & Recreation

KINGS POND NEIGHBORHOOD PARK

APPLICANT: Vancouver-Clark Parks & Recreation Department
Vancouver, Washington (360) 696-8171

OWNER: CITY OF VANCOUVER
Vancouver, Washington

proud past, promising future

CLARK COUNTY WASHINGTON

SHEET TITLE
PLAN AND PROFILE

DATE 3/28/08
SCALE SEE SHEET
JOB #
DWG BY: RK
CKD BY:

REVISIONS

SHEET NO.

KP-C2-01

MICHAEL M. EVANOFF
STATE OF WASHINGTON
29030
REGISTERED PROFESSIONAL ENGINEER
EXPIRES MAY 26, 2009
3-28-2008

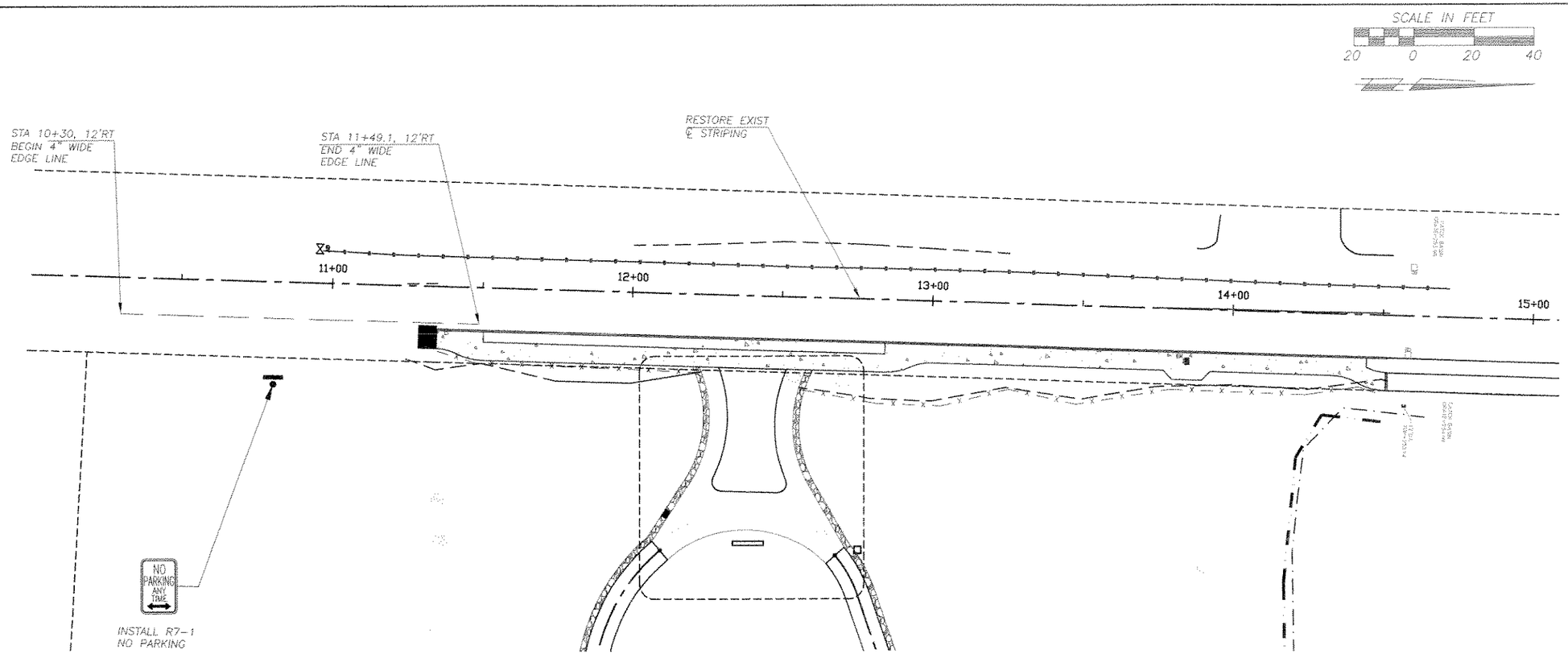

NOT IN CONTRACT
PERMANENT SIGNING AND STRIPING TO BE DONE BY CLARK COUNTY. FOR INFORMATION ONLY

MICHAEL M. FERRICH
STATE OF WASHINGTON
29030
REGISTERED
PROFESSIONAL ENGINEER
3-28-2008
EXPIRES: MAY 26, 2009

VANCOUVER-CLARK PARKS & Recreation

KINGS POND NEIGHBORHOOD PARK

APPLICANT:
Vancouver-Clark Parks & Recreation Department
Vancouver, Washington (360) 696-8171

OWNER:
CITY OF VANCOUVER
Vancouver, Washington

proud past, promising future
CLARK COUNTY WASHINGTON

SHEET TITLE
SIGNING & STRIPING

DATE 3/28/08
SCALE SEE SHEET
JOB #
DWG BY:
CKD BY: RK

REVISIONS

SHEET NO.
KP-C2-02

LEGEND

—SF—SF— SILT FENCE

(IP) INLET PROTECTION

CONSTRUCTION ENTRANCE

SCALE IN FEET

20 0 20 40

APPROPRIATE DEMARCATION OF THE HABITAT BOUNDARIES SHALL BE IN PLACE PRIOR TO INITIATING ANY GROUNDBREAKING ACTIVITY

PERVIOUS CONCRETE SIDEWALK (SLOPED AWAY FROM ROAD)

55' LONG x 2.5' WIDE, 4' DEEP INFILTRATION TRENCH

STABILIZED CONSTRUCTION ENTRANCE

PEDESTRIAN PATH IMPERVIOUS ASPHALT (SLOPE TO OUTSIDE)

S 88°29'02" E 370.00'

N 00°03'58" E 317.08'

N 88°29'30" W 100.00'

N 00°03'59" E 15.00'

S 88°29'38" E 0.89'

N 00°04'01" E 1.88'

S 88°35'06" E 88.04'

N 00°03'59" E 251.69'

N 00°05'50" E 79.24'

590 SF

430 SF

8.00

TAX LOT 64.79

TAX LOT 65

TAX LOT 66

TAX LOT 65

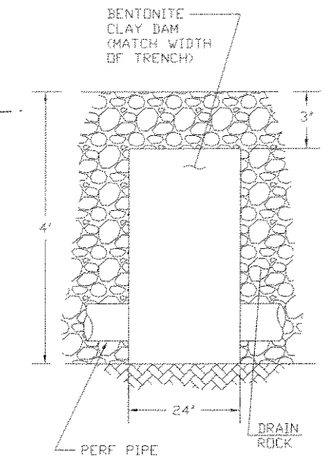

BENTONITE TRENCH DAM

N.T.S.

INFILTRATION/ DETENTION TRENCH DETAIL

(SEE SHT KP-C7-01)

(1) BENTONITE TRENCH DAM

MICHAEL M. CHRISTIAN STATE OF WASHINGTON 29030 REGISTERED PROFESSIONAL ENGINEER EXPIRES: MAY 26, 2008

3-28-2008

VANCOUVER-CLARK PARKS & Recreation

KINGS POND NEIGHBORHOOD PARK

APPLICANT: Vancouver-Clark Parks & Recreation Department Vancouver, Washington (360) 696-8171

OWNER: CITY OF VANCOUVER Vancouver, Washington

proud past, promising future

CLARK COUNTY WASHINGTON

SHEET TITLE

EROSION CONTROL & PARK DRAINAGE

DATE 3/28/08

SCALE SEE SHEET

JOB #

DWG BY: RK

CKD BY:

REVISIONS

SHEET NO.

KP-C4-01

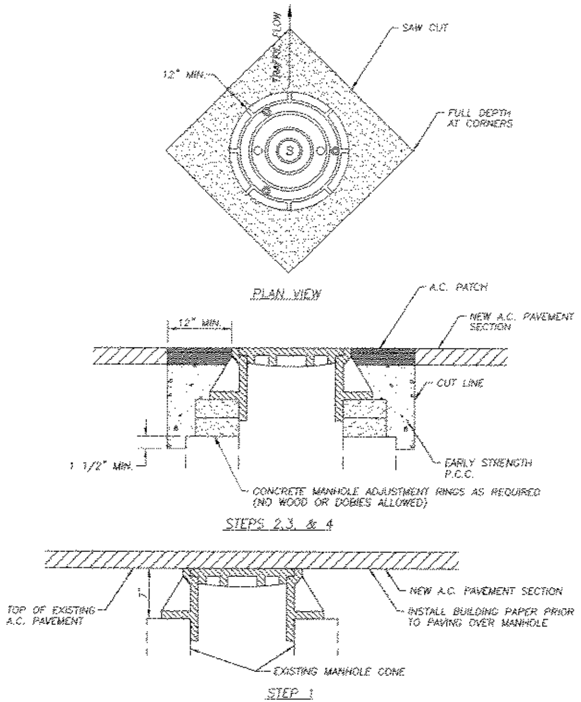

STEP 1 COVER EXSITING MANHOLE WITH BUILDING PAPER AND CONSTRUCT A.C. PAVEMENT OVER TOP OF MANHOLE.
STEP 2 SAW CUT AND REMOVE PAVEMENT AROUND MANHOLE 12" MIN. FROM MANHOLE FRAME.
STEP 3 RAISE MANHOLE FRAME AND COVER USING CONCRETE RINGS AND MECHANICAL ADJUSTMENT DEVICES TO FINISH GRADE MATCHING PROFILE AND CROSS SLOPE.
STEP 4 BACKFILL WITH EARLY STRENGTH P.C.C. AND A.C. TO DEPTHS AS DIRECTED.

NO.	REVISIONS	DATE	BY

Department of Public Works — CLARK COUNTY WASHINGTON — proud past, promising future

MANHOLE ADJUSTMENT — APPROVED — COUNTY ENGINEER — DATE 7/1/10 — F27

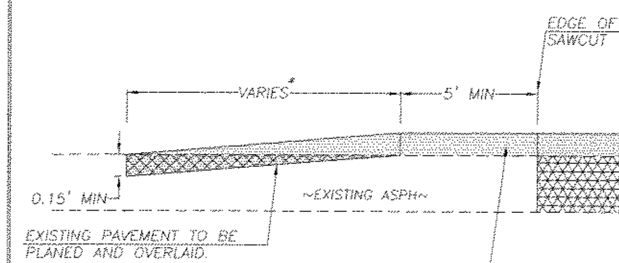

EXISTING PAVEMENT TO BE PLANED AND OVERLAID.

0.15' MIN CLASS "A" ACP OVERLAY TO EXTEND MIN 5' FROM SAWCUT.

* LENGTH VARIES TO MAKE SMOOTH TRANSITION TO EXISTING ROAD GRADE. (MINIMUM 15 FEET)

TO BE USED AS AN ALTERNATIVE IN LIEU OF FULL LANE REMOVAL AND REPLACEMENT WHEN APPROVED BY CLARK COUNTY.

NO.	REVISIONS	DATE	BY
1	NOTE	03/08/01	BK
2	FIG. 1	05/02/01	DS
3	CHANGED ACP CLASS	03/28/02	KB

Department of Public Works — CLARK COUNTY WASHINGTON — proud past, promising future

BUTT JOINT PLANING AND OVERLAY DETAIL — APPROVED — COUNTY ENGINEER — DATE 9/30/02 — STANDARD U7

JOINT SPACING:
SURFACE JOINTS – 5'
CONTROL JOINTS – 15'
EXPANSION JOINTS AT STRUCTURES, OBSTRUCTIONS, OR AS DIRECTED BY THE INSPECTOR.

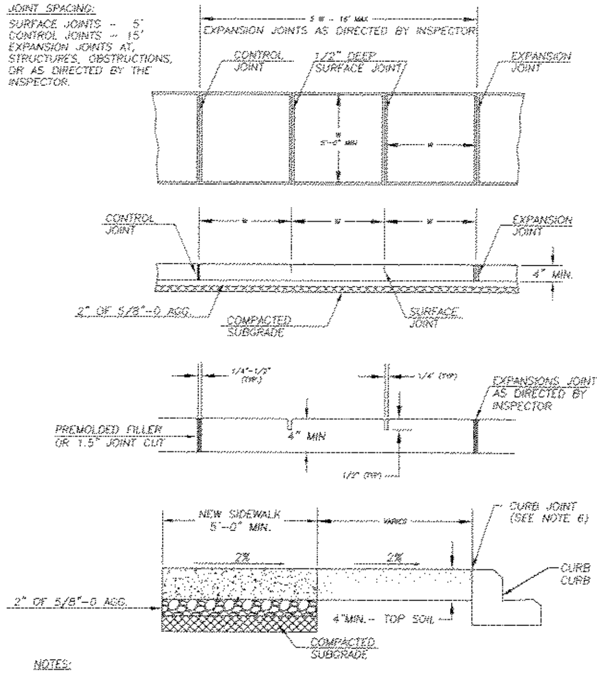

NOTES:

1. CONCRETE SHALL BE 3,000 PSI MIN. (CLASS 3000), 3 1/2" SLUMP (± 1")
2. FINISH SHALL BE MEDIUM BROOM PERPENDICULAR TO PEDESTRIAN TRAFFIC UNLESS OTHERWISE DIRECTED.
3. ALL EXISTING EDGES SHALL BE SAWCUT.
4. NO FILLER REQUIRED FOR SURFACE JOINTS.
5. ALL JOINTS AND EDGES SHALL BE FINISHED WITH 1/4" RADIUS EDGER (3" SMOOTH EACH SIDE)
6. FOR SIDEWALKS ADJACENT TO THE CURB AND POURED AT THE SAME TIME AS THE CURB, THE JOINT BETWEEN THEM SHALL BE A TROWELED JOINT WITH A MIN. 1/2" RADIUS.

NO.	REVISIONS	DATE	BY
1	CHANGE SUBGRADE &	03/28/02	KB
2	2" BASE AGG. & NOTES	10/07/02	SCH

Department of Public Works — CLARK COUNTY WASHINGTON — proud past, promising future

SIDEWALK DETAIL — APPROVED — COUNTY ENGINEER — DATE 11/01/04 — STANDARD F12

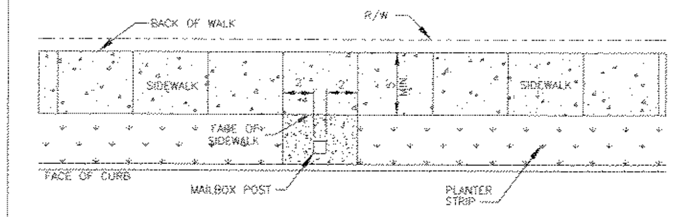

MAILBOX IN PLANTER STRIP

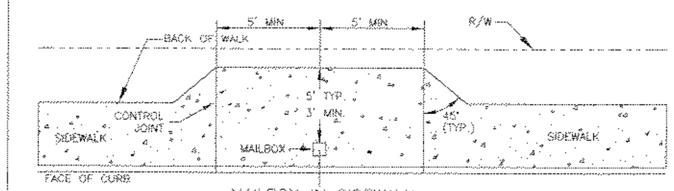

MAILBOX IN SIDEWALK

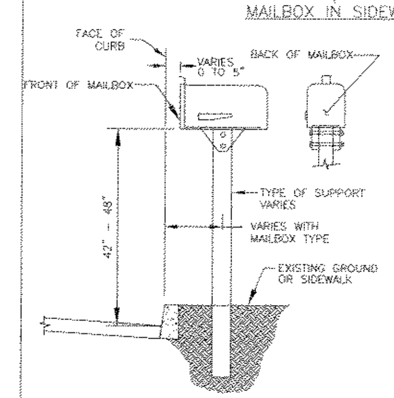

NOTES:

1. SEE CURRENT WSDOT STANDARD PLAN No. H-12 FOR MAILBOX, POST, BRACKET AND OTHER INSTALLATION DETAILS.
2. MAILBOXES MUST BE POSTMASTER APPROVED. CONTACT MIKE WENTZEL (MAINTENANCE MANAGER) AT 992-5052.
3. LOCATION OF MAILBOXES ARE SUBJECT TO APPROVAL BY COUNTY ENGINEERING FOR ACCESS AND SIGHT DISTANCE REQUIREMENTS. CONTACT ENGINEERING SERVICES AT 397-2375 ext. 4997
4. INSTALL EXPANSION JOINT MATERIAL AROUND MAILBOX POST WHEN SET IN SIDEWALK.
5. EXTEND SIDEWALK JOINTS THROUGH WIDENED SIDEWALK SECTION.
6. COLLECTION BOX UNITS (CBU) AND CONCRETE BASE ARE INSTALLED BY THE U.S. POSTAL SERVICE. SEE NOTE 2 FOR CONTACT.
7. A MAILBOX TURNOUT CONFORMING TO DETAIL F13b IS REQUIRED FOR ALL STREETS EXCEPT ACCESS AND SUBCOLLECTOR STREETS WHERE THE POSTED SPEED LIMIT IS 25 MPH OR LESS.

WSDOT STD. PLANS WEB SITE ADDRESS:
http://www.wsdot.wa.gov/eesc/design/designstandards/HTM/TOC.pdf

NO.	REVISIONS	DATE	BY

Department of Public Works — CLARK COUNTY WASHINGTON — proud past, promising future

SIDEWALK MAILBOX PLACEMENT — APPROVED — COUNTY ENGINEER — DATE 11/01/04 — STANDARD F13

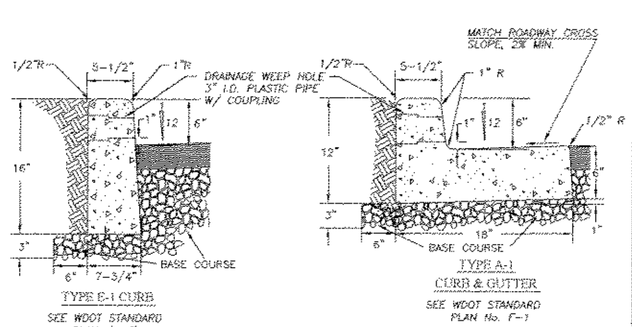

NOTES

1. CONCRETE SHALL BE 3000 PSI MIN. (CLASS 3000) 3 1/2" SLUMP (MAX.)
2. CURBS ADJACENT TO PAVEMENT OR SIDEWALK TO HAVE EXPANSION AND/OR CONTRACTION JOINTS TO MATCH EXISTING PATTERNS.
3. 3/8" EXPANSION JOINTS TO BE PROVIDED AT EACH POINT OF TANGENCY OF THE CURB, COLD JOINTS, EACH SIDE OF INLET STRUCTURES AND DRIVEWAYS. MATERIAL TO BE PRE-MOLDED, ASPHALT IMPREGNATED AND NON EXTRUDING.
4. CONTRACTION JOINT SPACING NOT TO EXCEED 15 FEET. THE DEPTH OF THE JOINT SHALL BE AT LEAST 1-1/2 INCHES. WEEP HOLES TO BE CENTERED WITH CONTRACTION JOINTS.
5. BASE COURSE SHALL BE TO SUBGRADE OF STREET SECTION OR 3 INCHES, WHICHEVER IS GREATER, AND SHALL EXTEND 6" BEHIND THE CURB.
6. DRAINAGE WEEP HOLES TO BE 3" I.D. PLASTIC PIPE WITH COUPLING. FINISH PIPE END FLUSH WITH FACE OF CURB.
7. GROUT ANY VOIDS IN CONCRETE SURROUNDING PIPE.
8. DRAINAGE ACCESS THROUGH EXISTING CURBS SHALL BE CORE DRILLED.
9. CURB TO BE BRUSH FINISHED. ALL EXISTING EDGES SHALL BE SAWCUT.
10. ALL MATERIALS AND WORKMANSHIP FOR TYPE E-1 & A-1 SHALL BE IN ACCORDANCE WITH WDOT STANDARD PLAN No. F-1, APPROVED 7/18/97 OR MOST CURRENT REVISION.

NO.	REVISIONS	DATE	BY

Department of Public Works — CLARK COUNTY WASHINGTON — proud past, promising future

CONCRETE CURBS — APPROVED — COUNTY ENGINEER — DATE 11/01/04 — STANDARD F18

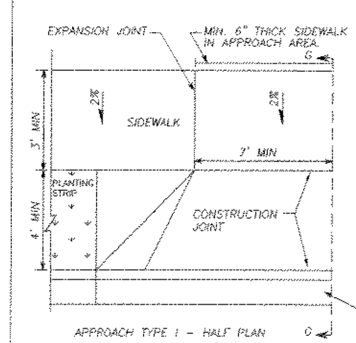

APPROACH TYPE I – HALF PLAN

— CEMENT CONCRETE CURB AND GUTTER SECTION SHOWN (SEE STANDARD PLANS FOR OTHER CURB DESIGNS).

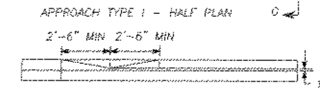

OPTIONAL APPROACH – HALF ELEVATION

NOTE: USE TYPE I APPROACH ONLY WHEN A SIDEWALK IS USED AT THE BACK OF THE APPROACH.

NOTES:

1. A MINIMUM 3' WIDE ACCESSIBLE ROUTE SHALL BE MAINTAINED IN ALL PEDESTRIAN ACCESSIBLE AREAS.
2. CONTRACTION POINTS SHALL BE PLACED ALONG SIDEWALKS IN ACCORD WITH SIDEWALK DETAIL. ALL JOINTS SHALL BE CLEANED AND EDGED.
3. CHANGES IN LEVEL UP TO 1/4" MAY BE VERTICAL AND WITHOUT EDGE TREATMENT. CHANGES IN LEVEL BETWEEN 1/4" AND 1/2" SHALL BE BEVELED WITH A SLOPE NO GREATER THAN 2:1.
4. CEMENT CONCRETE APPROACHES SHALL BE CONSTRUCTED OF AIR-ENTRAINED CLASS 3000 AND MAY BE POURED INTEGRAL WITH CURB.
5. EXISTING CURB, GUTTER, AND SIDEWALK TO BE SAWCUT AND REMOVED FOR INSTALLATION OF APPROACH.
6. COMMERCIAL DRIVEWAY REQUIRES REINFORCING STEEL (6"x6" 10 GA WIRE MESH) MIN. 3" COVER.
7. 3" DEPTH 3/4"-0 CRUSHED AGGREGATE BASE COMPACTED TO 95% OF MAX. DRY DENSITY.
8. SUBGRADE PREPARATION PER WSDOT STD. SPEC. 2-06.3(1).

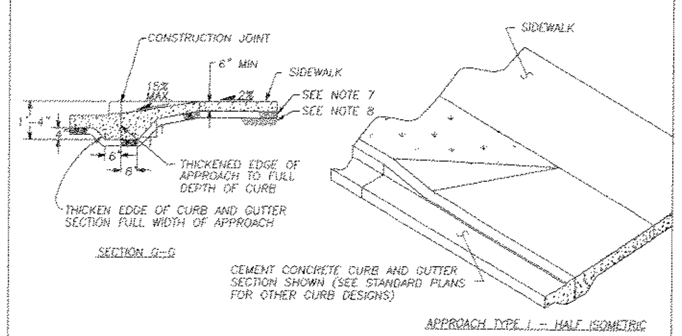

NO.	REVISIONS	DATE	BY
1	NOTE #6, 7, 8	10/08/04	SCH

Department of Public Works — CLARK COUNTY WASHINGTON — proud past, promising future

DETAIL – TYPE 1 CEMENT CONCRETE APPROACH — APPROVED — COUNTY ENGINEER — DATE 9/12/00 — F14

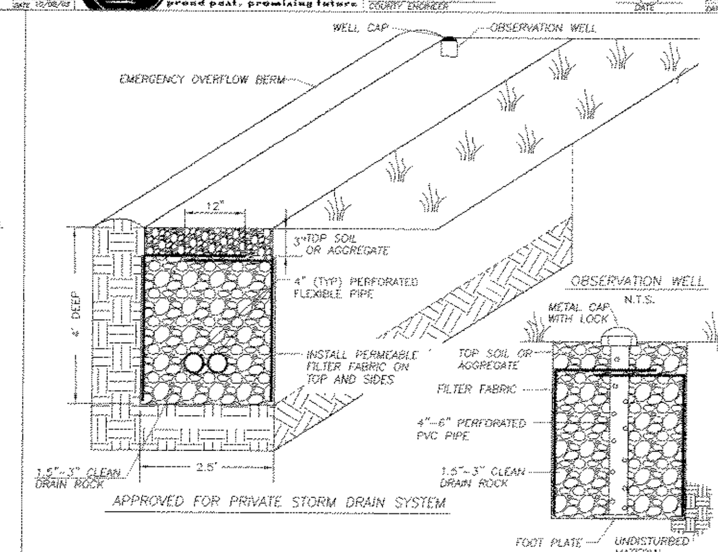

NOTES

1. AGGREGATE SHALL BE COMPLETELY ENCASED IN ENGINEERING GEOTEXTILE MATERIAL. IN THE CASE OF AN AGGREGATE SURFACE, GEOTEXTILE SHOULD SURROUND ALL OF THE AGGREGATE FILL MATERIAL EXCEPT FOR THE TOP ONE-FOOT, WHICH IS PLACED OVER THE GEOTEXTILE.
2. THE INFILTRATION TRENCH IS GENERALLY USED FOR SMALL DRAINAGE AREAS. AN EMERGENCY SPILLWAY MAY NOT BE NECESSARY. HOWEVER, AN OVERFLOW OUTLET MAY BE REQUIRED TO BE PROVIDED.
3. AN OBSERVATION WELL SHOULD BE INSTALLED AT THE LOWER END OF THE INFILTRATION TRENCH TO CHECK WATER LEVELS, DRAWDOWN TIME, SEDIMENT ACCUMULATION, AND CONDUCT WATER QUALITY MONITORING. FOR LARGER TRENCHES A 12"-36" WELL CAN BE INSTALLED TO FACILITATE MAINTENANCE OPERATIONS SUCH AS PUMPING OUT OF SEDIMENT. THE TOP OF THE WELL IS TO BE CAPPED TO DISCOURAGE VANDALISM AND TAMPERING. PUBLIC INFILTRATION TRENCH REQUIRES A CLEANOUT TO BE INSTALLED AT END OF PERFORATED PIPE.
4. THE STONE AGGREGATE IS TO BE PLACED IN LIFTS AND COMPACTED USING PLATE COMPACTORS. THE MAXIMUM LOOSE LIFT THICKNESS IS TO BE 12".
5. FOLLOWING THE STONE AGGREGATE PLACEMENT, THE GEOTEXTILE MUST BE FOLDED OVER THE TOP TO FORM A 12" MINIMUM LONGITUDINAL OVERLAP. THE UPSTREAM ROLL SHALL OVERLAP A MINIMUM OF 2' OVER THE DOWNSTREAM ROLL (PROVIDE SHINGLE AFFECT).
6. VOIDS BETWEEN THE GEOTEXTILE AND THE EXCAVATION SIDES MUST BE AVOIDED.
7. IF VERTICALLY EXCAVATED WALLS BECOME DIFFICULT TO MAINTAIN, USE TRAPEZOIDAL SECTION.

INFILTRATION/DETENTION TRENCH

N.T.S.

VANCOUVER-CLARK PARKS & Recreation

KINGS POND NEIGHBORHOOD PARK

OWNER: CITY OF VANCOUVER, Vancouver, Washington

APPLICANT: Vancouver-Clark Parks & Recreation Department, Vancouver, Washington (360) 696-8171

CLARK COUNTY WASHINGTON — proud past, promising future

SHEET TITLE: ROAD/DRAINAGE DETAILS

DATE: 3/28/08

SCALE: SEE SHEET

JOB #:

DWG BY: RK

CKD BY:

REVISIONS:

SHEET NO.: KP-C7-01

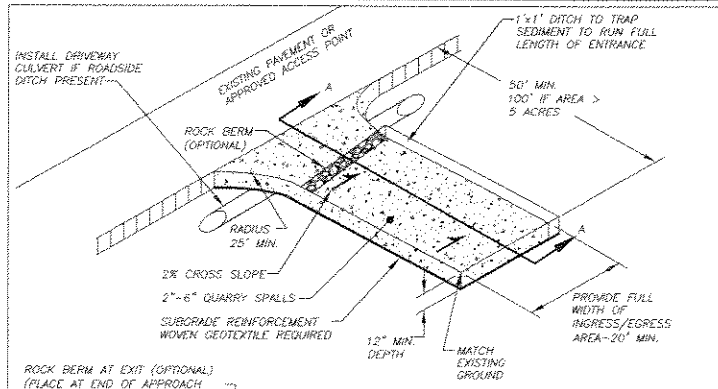

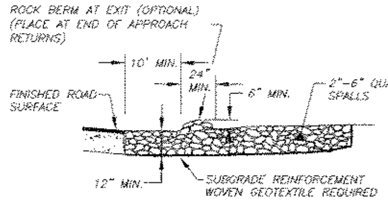

SECTION A-A

1. EXCAVATE MINIMUM OF 12" OF EXISTING SOILS.
2. PLACE MINIMUM OF 12" OF 2"-6" QUARRY SPALLS.
3. CONSTRUCT ROCK BERM ALONG TRANSITION POINT TO FINISH ROAD SURFACES, DIVERT RUNOFF TO ONSITE AREA (OPTIONAL).

NOTES:

1. FOR DEVELOPMENT PROJECTS REVIEWED BY ENGINEERING SERVICES. NOT FOR USE WITH SINGLE FAMILY OR DUPLEX RESIDENTIAL BUILDING PERMITS. SEE BUILDING DEPT. FOR GRAVEL CONSTRUCTION ENTRANCE PLAN.
2. INSTALL WOVEN GEOTEXTILE FABRIC TO PREVENT SUB-SOIL PUMPING.
3. VEHICLE WASHDOWN AREA, IF REQUIRED, IS TO BE INSTALLED AND USED TO REMOVE SEDIMENT FROM VEHICLES THAT ARE ABOUT TO ENTER AN ESTABLISHED ROAD.
4. WASHDOWN AREA TO BE MADE UP OF CLEAN 2"- 6" QUARRY SPALLS, 12" DEEP (MIN) OVER WOVEN GEOTEXTILE FABRIC. WASHDOWN AREA TO BE FULL WIDTH OF ENTRANCE AND 50' LENGTH (MIN.), AND 100' IF EXPOSED SOIL IS OVER 5 ACRES.
5. AT TIME OF PRECONSTRUCTION MEETING, THE COUNTY INSPECTOR MAY REQUIRE THE ENTRANCE TO BE PAVED TO THE EDGE OF THE RIGHT-OF-WAY PRIOR TO THE INSTALLATION OF A WASHDOWN ENTRANCE TO AVOID DAMAGE TO THE EXISTING ROADWAY.
6. THE RESPONSIBLE EROSION CONTROL INDIVIDUAL IS TO ENSURE THAT ALL VEHICLES USE THIS ENTRANCE AND ARE TO BE INSPECTED AND CLEANED OF SOILS BEFORE LEAVING PROJECT, AND THAT THE ENTRANCE IS TO BE KEPT CLEAN AT ALL TIMES.

NO.	REVISIONS	DATE	BY

DWG: E1.DWG

Department of Public Works
CLARK COUNTY WASHINGTON
proud past, promising future

STABILIZED CONSTRUCTION ENTRANCE
APPROVED
COUNTY ENGINEER — 01/01/04 DATE
STANDARD E1 DETAIL
DESIGNED / DRAWN / DATE 01/01/08

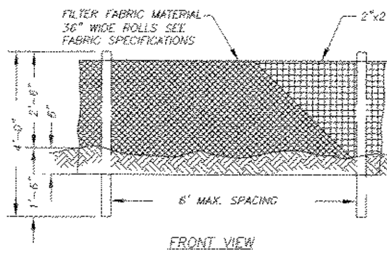

FRONT VIEW

SILT FENCE FABRIC SPECIFICATIONS
(WOVEN POLYPROPYLENE SILT FENCE FABRIC)

PROPERTY	TEST PROCEDURE	MIN. FABRIC VALUE
GRAB TENSILE STRENGTH	ASTM D-4632	180 LBS.
GRAB ELONGATION	ASTM D-4632	30%
TRAPEZOID TEAR	ASTM D-4533	70 LBS.
MULLEN BURST	ASTM D-3786	300 PSI.
PUNCTURE	ASTM D-4833	80 LBS.
PERMITTIVITY	ASTM D-4491	0.07 SEC-1 MIN.
PERMEABILITY	ASTM D-4491	.005 CM/SEC
A.O.S.	ASTM D-4751	50 U.S. SIEVE
UV RESISTANCE(500 HRS)	ASTM D-4355	70%

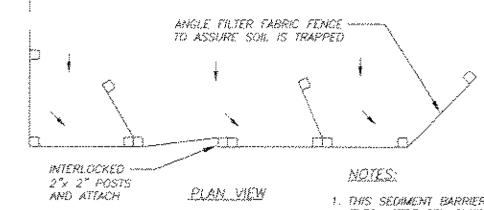

PLAN VIEW

NOTES:

1. THIS SEDIMENT BARRIER UTILIZES STANDARD STRENGTH OR EXTRA STRENGTH SYNTHETIC FILTER FABRICS, IT IS DESIGNED FOR SITUATIONS IN WHICH ONLY SHEET OR OVERLAND FLOWS ARE EXPECTED. (SEE FABRIC SPECIFICATIONS ABOVE).
2. BURY BOTTOM OF FILTER FABRIC 6" VERTICALLY BELOW FINISHED GRADE.
3. POST ARE TO BE 2"x2" FIR, PINE OR STEEL FENCE POSTS.
4. POST TO BE INSTALLED ON UPHILL SIDE OF SLOPE FOR FENCING WITH STITCHED LOOP. FOR STAPLED FENCING, POST TO BE INSTALLED ON DOWNHILL SLOPE.
5. COMPACT BOTH SIDES OF FILTER FABRIC TRENCH.
6. SEDIMENT FENCE TO BE SPACED ON SLOPES PER TABLE BELOW.

INSTALL PARALLEL ALONG CONTOURS AS FOLLOWS		
% SLOPE	SLOPE	MAX. SPACING ON SLOPE
10% FLATTER	10:1 OR FLATTER	300 ft.
10>%<15	10:1>x<7.5:1	150 ft.
15>%<20	7.5:1>x<5:1	100 ft.
20>%<30	5:1>x<3.5:1	50 ft.
30>%<50	3.5:1>x<2:1	25 ft.

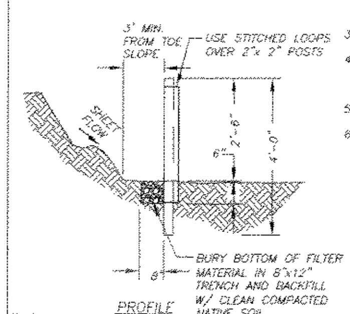

PROFILE

NO.	REVISIONS	DATE	BY

DWG: E4.DWG

Department of Public Works
CLARK COUNTY WASHINGTON
proud past, promising future

SILT FENCE
APPROVED
COUNTY ENGINEER — 01/01/04 DATE
STANDARD E4 DETAIL
DESIGNED / DRAWN / DATE 01/01/06

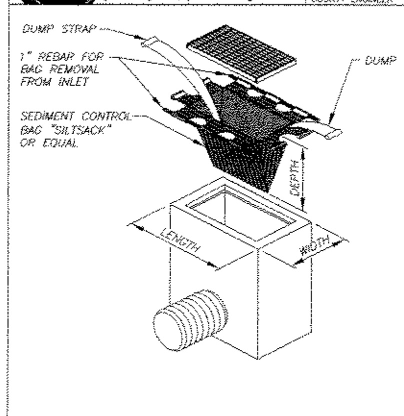

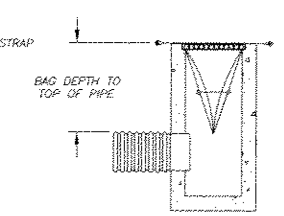

INSTALLATION DETAIL

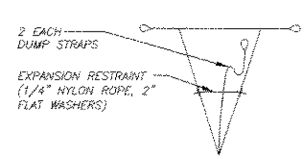

BAG DETAIL

CB STYLE	LENGTH	WIDTH	DEPTH
TYPE 1 CB	24"	20"	VARIES
TYPE 1 CCI	29.5"	24"	VARIES
USA G2	32.5"	27.5"	VARIES

INLET SEDIMENT CONTROL DEVICE -- SILT SACK

NOTES:

1. THE DIMENSION CHART ABOVE IS FOR STANDARD CATCH BASINS AND INLETS ONLY. THE CONTRACTOR IS RESPONSIBLE FOR PROVIDING THE CORRECT SIZE DEVICE FOR EACH INLET.
2. FOR NON-STANDARD CATCH BASINS AND INLETS, THE CONTRACTOR SHALL MEASURE DIMENSIONS IN THE FIELD AND ORDER THE APPROPRIATE SIZE(S).
3. THE INLET SEDIMENT CONTROL DEVICE SHALL BE OF HIGH FLOW DESIGN (200 GAL/MIN/FT), AS PER THE MANUFACTURER'S SPECS.
4. THE SEDIMENT CONTROL DEVICE SHALL BE INSPECTED DAILY BY THE CONTRACTOR AND MAINTAINED A MINIMUM ONCE PER MONTH OR WITHIN THE 48 HOURS FOLLOWING A STORM EVENT. FILTER SHALL BE CLEANED IN A MANNER WHICH ENSURES THAT ALL SEDIMENT REMAINS ON SITE.
5. SUBSTITUTION OF A SHEET OF FILTER FABRIC PLACED OVER THE OPENING OF THE INLET IS NOT APPROVED.
6. RECESSED CURB INLET CATCH BASINS MUST BE BLOCKED WHEN USING FILTER FABRIC INLET SACKS, SIZE OF FILTER INLET SACK TO BE DETERMINED BY MANUFACTURER.
7. THE FILTER SHALL BE REPLACED OR CLEANED WHEN THE BAG BECOMES HALF FULL.
8. SEE INLET PROTECTION NOTES STD. DETAIL E3.

NO.	REVISIONS	DATE	BY

DWG: E3d.DWG

Department of Public Works
CLARK COUNTY WASHINGTON
proud past, promising future

INLET PROTECTION TYPE 6
SILT SACK
APPROVED
COUNTY ENGINEER — DATE
STANDARD E3d DETAIL
DESIGNED / DRAWN / DATE 06/01/07

STANDARD NOTES FOR EROSION CONTROL PLAN

1. The Contractor shall install and maintain BMP's as shown and perform all actions necessary to prevent erosion, and control sediment from leaving the construction site. Site Contractor shall comply with Clark County Code Chapter 40.380.050.

2. All erosion control measures shall be in-place and in working condition prior to disturbing and exposing any soil surfaces (i.e. silt fence, construction entrance, sedimentation barriers, sedimentation traps).

3. All erosion prevention and control BMP's shall be maintained and repaired as needed to insure continued performance of their intended function. Needed repairs shall be made as soon as practicable. They are to remain in place and operational during all phases of construction. Construction activities shall not continue or resume until repairs to erosion control facilities are made and the facilities are functional. Any sediment leaving the site or discharging to a sensitive area shall be stopped and controlled immediately. Contaminated areas shall be cleaned and restored.

4. Clearing limits and work area limits shall be delineated and marked. Do not disturb more area than needed for construction requirements.

5. All sensitive or critical areas (wetlands, steep slopes, natural waterways), and buffers shall all be clearly delineated and clearly marked, and protected from sediment deposition.
6. Sediment laden runoff shall be prevented from entering all existing storm water catch basins and inlets affected by construction.

7. No exposed, bare soils shall remain unstabilized for more than two days during the period October 1 thru April 30 or for more than seven days during the period of May 1 through September 30. All disturbed soil surfaces shall be stabilized by a suitable application of "Best Management Practices".

8. Where feasible, no more than 500 feet of trench shall be open at one time. Excavated material shall be placed on the up-hill side of trenches provided it does not conflict with safety requirements.

9. Dewatering devices shall discharge into a sediment trap or sediment pond. No discharge shall be made to a paved street or stormwater collection system without first removing sediment.

10. Cut and fill slopes shall be constructed in a manner that will minimize erosion. Erosion shall be controlled and prevented by such measures as roughening the surface, installation of interceptor ditches, terracing, covering with matting, mulch or plastic sheeting. Runoff shall be prevented from entering a slope and from undercutting the base of slopes.

11. Any soil or debris transported onto roadways and sidewalks shall be removed. Deposits shall be completely removed by shoveling and/or sweeping. Washing shall not be utilized unless specifically approved in writing by the County.

12. All permanent infiltration systems shall be isolated and protected from sediment laden runoff entering to avoid risk of reducing the ability of the systems to infiltrate. Isolation and protection shall not be removed until the drainage area tributary to the system is completely stabilized.

CONTINUED ON SHEET 2

NO.	REVISIONS	DATE	BY

DWG: DWG

Department of Public Works
CLARK COUNTY WASHINGTON
proud past, promising future

TITLE
SUBT
APPROVED
COUNTY ENGINEER — 01/01/04 DATE
STANDARD ECN1 PLAN No.
DESIGNED: 3 / DRAWN: 5 / DATE XX/XX/XX

STANDARD NOTES FOR EROSION CONTROL PLAN (CONTINUED)

13. All conveyance channels, both temporary and permanent shall be stabilized to prevent erosion of the channel. Stabilization shall extend to areas at outlets and downstream reaches vulnerable to erosion resulting from flow discharging from the channel.

14. If BMP's shown are utilized but are insufficient to prevent sediment from reaching water bodies, adjacent properties, or public rights-of-way; additional BMP's shall be implemented immediately to prevent further encroachment of sediment.

15. Stabilized areas shall be provided for employee parking and storage of construction materials. Erodeable stockpiles of earthen materials, such as topsoil, silty and clayey soils; and landscape materials, shall be covered when not being incorporated in the work. Erosion control BMP's shall be utilized as necessary to prevent sediment laden runoff from leaving or sediment being transported from these areas from vehicle activity.

16. All pollutants other than sediment that occur during construction shall be handled and disposed of in a manner that does not cause contamination of storm water.

17. The Contractor shall keep an inspection log of the condition of the erosion control facilities. Erosion control facilities shall be inspected at least weekly and after each rainfall. The inspection log shall be kept at the project site at a designated location and shall be available for review by the County. An individual that has successfully completed the County's Erosion Control Certification course shall perform inspections and maintain the log.

18. All temporary BMP's shall be removed within 30 days after final site stabilization is achieved. Trapped sediment shall be deposited and stabilized on site. Areas disturbed resulting from removal shall be permanently stabilized.

19. Construction shall not be considered complete and acceptable until all disturbed soil surfaces have been protected from erosion with permanent landscaping, covering with impervious surfaces, restored to original undisturbed condition or permanently stabilized.

20. Vegetated stabilization and landscaping shall be fertilized, watered and maintained to insure that growth of vegetation is established and sustained.

21. During dry weather construction periods the contractor shall provide project-specific dust control measures that may include: Seeding, Mulching, Matting, Water, Tackifier, or Chemical Soil Stabilizers. The contractor shall maintain the dust control measures through dry weather periods until all disturbed areas have been stabilized. Immediately re-stabilize areas disturbed by contractor's operations or other activities (wind, water, vandalism, etc.).

22. Entry onto the construction site shall be restricted to a single approved entrance as shown on the plan.

23. Maintenance and repair of heavy equipment and vehicles which involve potential contaminants (oil,solvents,hydraulic fluid, etc.) must be conducted in a manner which prevents contamination of soils, surface water and ground water. Tarps, drip pans, or other appropriate measures shall be used as necessary.

24. Stripping, topsoil, and unsuitable material stockpiles shall be hydroseeded with "regreen wheat x wheat grass hybrid" by Hobbs and Hobkins (or approved equal). Maintenance of stockpile areas and reapplication of hydroseed covering shall be required if bare soil is present. During winter and wet weather conditions, stockpiles shall be covered with plastic sheeting per detail E-16.

SHEET 2 OF 2

NO.	REVISIONS	DATE	BY

DWG: DWG

Department of Public Works
CLARK COUNTY WASHINGTON
proud past, promising future

TITLE
SUBT
APPROVED
COUNTY ENGINEER — 01/01/04 DATE
STANDARD ECN2 PLAN No.
DESIGNED: B / DRAWN: 5 / DATE XX/XX/XX

MICHAEL M. EMRICK, STATE OF WASHINGTON, 29030, REGISTERED PROFESSIONAL ENGINEER
3-28-2008
EXPIRES MAY 26, 2009

VANCOUVER-CLARK PARKS & Recreation

KINGS POND NEIGHBORHOOD PARK

OWNER:
CITY OF VANCOUVER
Vancouver, Washington

Vancouver-Clark Parks & Recreation Department
Vancouver, Washington (360) 696-8171

CLARK COUNTY WASHINGTON
proud past, promising future

SHEET TITLE
EROSION CONTROL NOTES

DATE 3/28/08
SCALE SEE SHEET
JOB #
DWG BY: RK
CKD BY:
REVISIONS

SHEET NO.
KP-C7-02

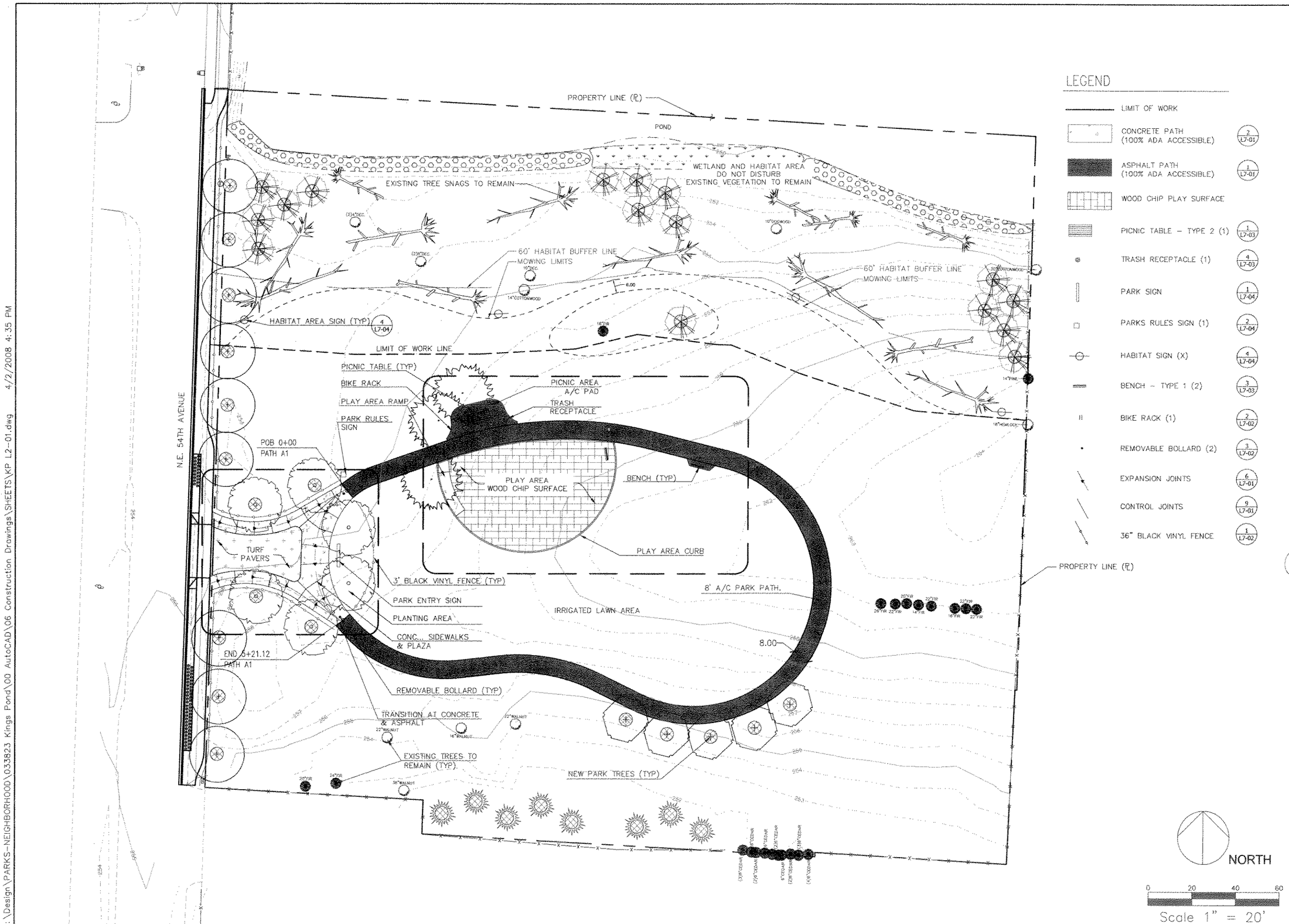

LEGEND

LIMIT OF WORK	
CONCRETE PATH (100% ADA ACCESSIBLE)	2/L7-01
ASPHALT PATH (100% ADA ACCESSIBLE)	1/L7-01
WOOD CHIP PLAY SURFACE	
PICNIC TABLE – TYPE 2 (1)	1/L7-03
TRASH RECEPTACLE (1)	4/L7-03
PARK SIGN	1/L7-04
PARKS RULES SIGN (1)	2/L7-04
HABITAT SIGN (X)	4/L7-04
BENCH – TYPE 1 (2)	3/L7-03
BIKE RACK (1)	2/L7-02
REMOVABLE BOLLARD (2)	3/L7-02
EXPANSION JOINTS	6/L7-01
CONTROL JOINTS	9/L7-01
36" BLACK VINYL FENCE	1/L7-02

VANCOUVER-CLARK PARKS & Recreation

KINGS POND NEIGHBORHOOD PARK

OWNER:
CLARK COUNTY
Vancouver, Washington

CONTACT:
JERRY BARNETT, CLARK COUNTY PUBLIC WORKS
Vancouver, Washington (360) 397-6118 EXT.4969

STATE OF WASHINGTON REGISTERED LANDSCAPE ARCHITECT
JEAN K. AKERS
CERTIFICATE NO. 1060

SHEET TITLE
CONSTRUCTION PLAN

DATE 1/11/08
SCALE 1"=20'-0"
JOB #
DWG BY: GA
CKD BY: AS

REVISIONS

SHEET NO. L2-01

I:\Design\PARKS-NEIGHBORHOOD\033823 Kings Pond\00 AutoCAD\06 Construction Drawings\SHEETS\KP L2-01.dwg 4/2/2008 4:35 PM

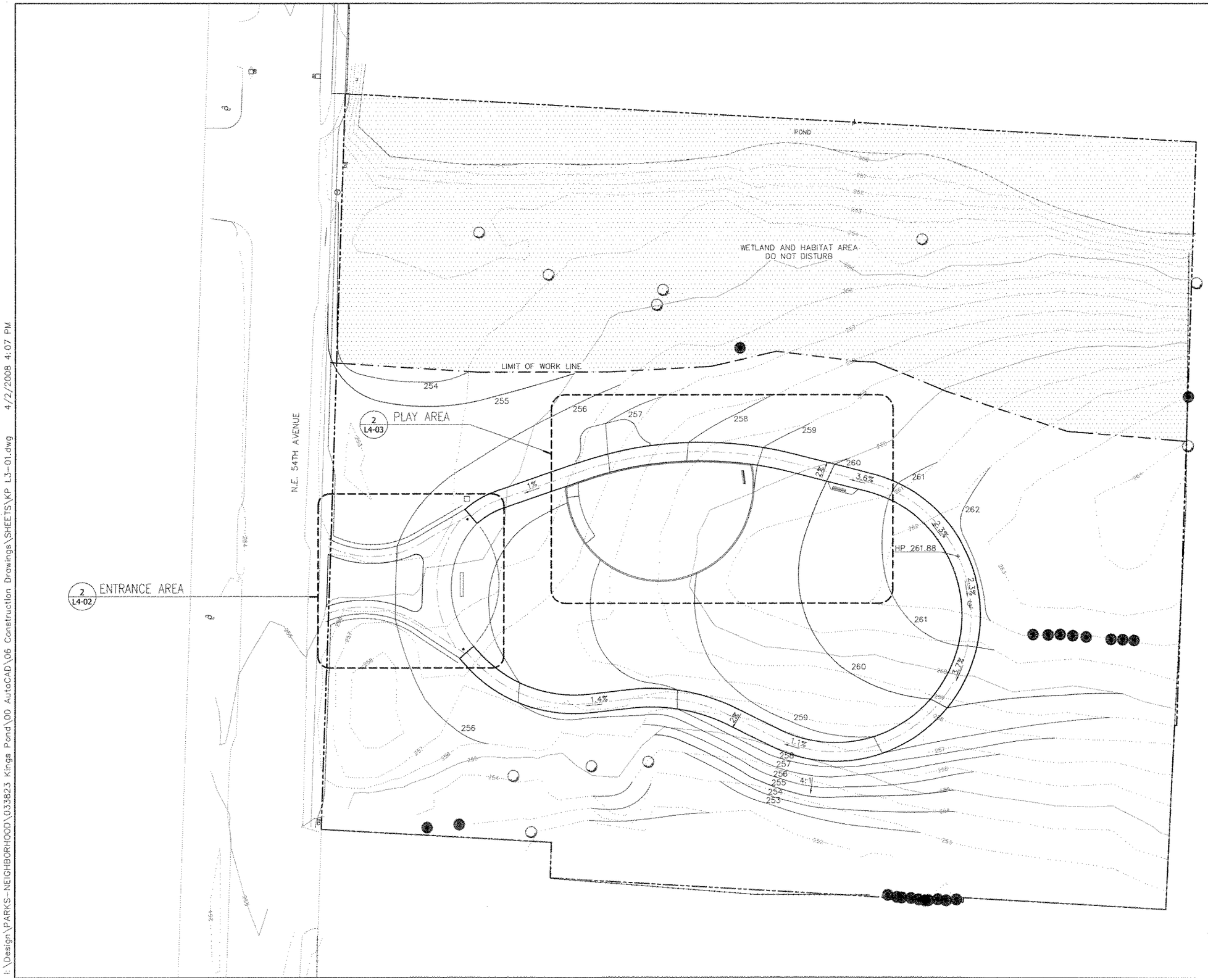

NOTE: ALL PATHS TO BE GRADED WITH MAXIMUM SLOPE OF 5%.

NORTH

0 20 40 60

Scale 1" = 20'

VANCOUVER-CLARK PARKS & Recreation

KINGS POND NEIGHBORHOOD PARK

OWNER:
CLARK COUNTY
Vancouver, Washington

CONTACT:
JERRY BARNETT, CLARK COUNTY PUBLIC WORKS
Vancouver, Washington (360) 397-6118 EXT.4969

STATE OF WASHINGTON REGISTERED LANDSCAPE ARCHITECT
JEAN K. AKERS
CERTIFICATE NO. 1060

SHEET TITLE
GRADING PLAN

DATE 1/11/08
SCALE 1"=20'-0"
JOB #
DWG BY: GA
CKD BY: AS

REVISIONS

SHEET NO. L3-01

I:\Design\PARKS-NEIGHBORHOOD\033823 Kings Pond\00 AutoCAD\06 Construction Drawings\SHEETS\KP L3-01.dwg 4/2/2008 4:07 PM

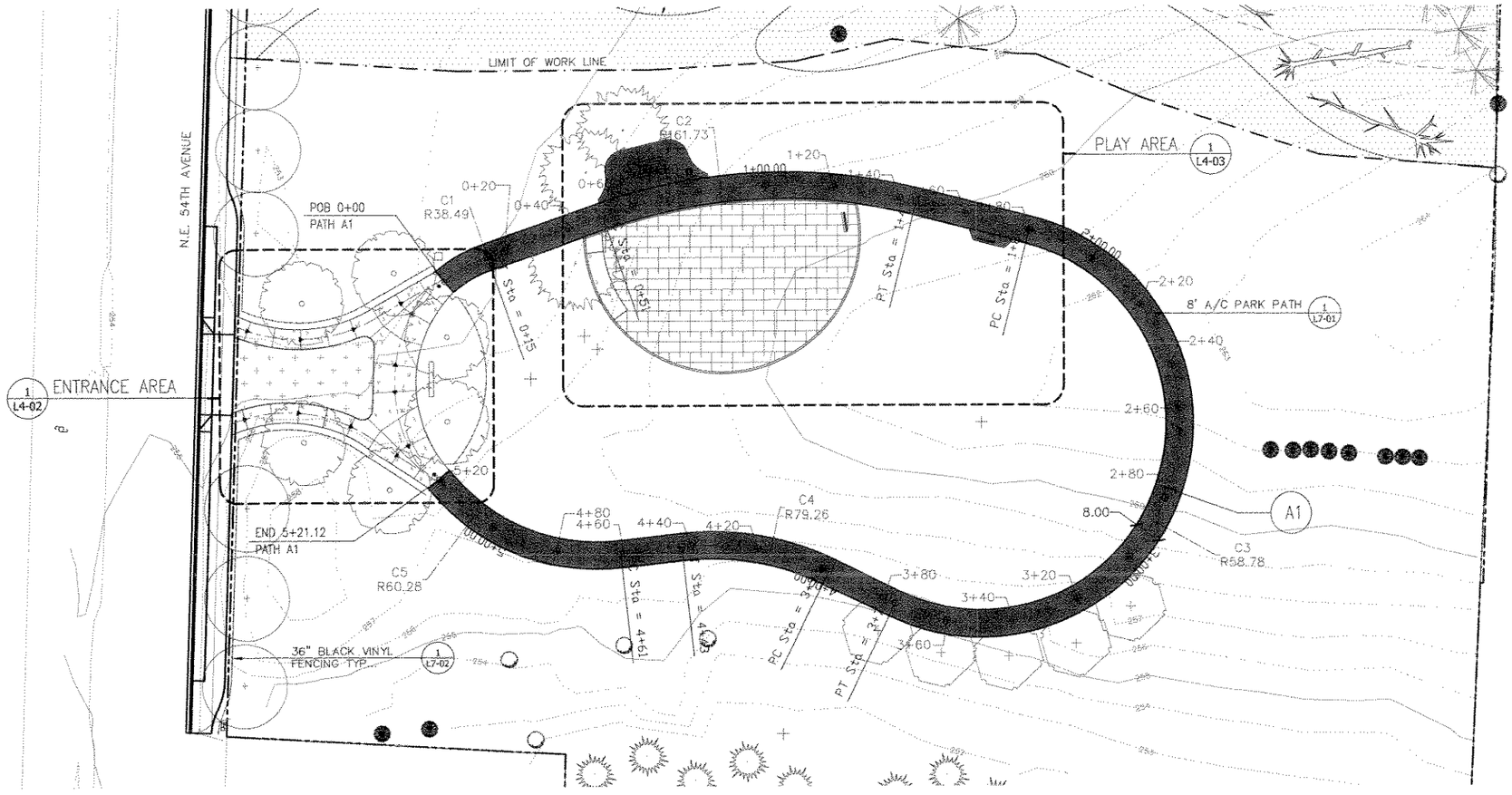

LAYOUT TABLE

NUMBER	DEFLECTION ANGLE	DELTA ANGLE	DEGREE OF CURVE - ARC	DEGREE OF CURVE - CHORD	CHORD DIRECTION	TANGENT	RADIUS	ARC LENGTH	CHORD LENGTH	EXTERNAL	MID ORDINATE
C1	21°48'42"	21°48'42"	148°50'42"	UNDEFINED	N 59°54'13" E	7.42	38.49	14.65	14.57	0.71	0.70
C2	33°24'59"	33°24'59"	35°25'37"	36°01'02"	N 87°31'04" E	48.55	161.73	94.32	92.99	7.13	6.83
C3	191°40'11"	191°40'11"	97°28'49"	116°34'15"	S 20°03'39" W	-575.17	58.78	196.62	116.94	636.94	64.75
C4	32°18'17"	32°18'17"	72°17'31"	78°13'41"	N 80°15'24" W	22.95	79.26	44.69	44.10	3.26	3.13
C5	57°12'28"	57°12'28"	95°02'36"	112°04'34"	N 67°48'19" W	32.87	60.28	60.19	57.72	8.38	7.36

ASPHALT PATH A1	STATION	COORDINATES NORTHING	COORDINATES EASTING	ELEVATION
POB	0+00	123258.79	1099196.33	256.36
	0+20	123267.85	1099213.98	256.56
	0+40	123274.42	1099232.87	256.76
	0+60	123280.74	1099251.84	256.96
	0+80	123285.01	1099271.37	257.54
	1+00	123286.83	1099291.27	258.14
	1+20	123286.19	1099311.25	258.74
	1+40	123283.09	1099330.99	259.38
	1+60	123278.25	1099350.40	260.02
	1+80	123273.33	1099369.78	260.74
	2+00	123265.10	1099387.91	261.33
	2+20	123251.30	1099402.25	261.63
	2+40	123233.50	1099411.16	261.67
	2+60	123213.75	1099413.61	261.21
	2+80	123194.31	1099409.34	260.65
	3+00	123177.41	1099398.82	259.95
	3+20	123164.99	1099383.27	259.31
	3+40	123158.47	1099364.46	258.90
	3+60	123158.61	1099344.56	258.68
	3+80	123165.26	1099325.79	258.46
	4+00	123173.98	1099307.78	258.24
	4+20	123179.89	1099288.73	258.02
	4+40	123180.86	1099268.81	257.76
	4+60	123178.67	1099248.93	257.48
	4+80	123179.44	1099229.04	257.20
	5+00	123186.65	1099210.48	256.88
	5+20	123199.50	1099195.28	256.56
END	5+21.12	123200.37	1099194.56	256.55

LEGEND

- LIMIT OF WORK
- CONCRETE PATH (100% ADA ACCESSIBLE) — 2 / L7-01
- ASPHALT PATH (100% ADA ACCESSIBLE) — 1 / L7-01
- WOOD CHIP PLAY SURFACE — 10 / L7-01
- PICNIC TABLE - TYPE 2 (1) — 1 / L7-03
- TRASH RECEPTACLE (1) — 4 / L7-03
- PARK SIGN — 1 / L7-04
- PARKS RULES SIGN (1) — 2 / L7-04
- HABITAT SIGN (X) — 4 / L7-04
- BENCH - TYPE 1 (2) — 3 / L7-03
- BIKE RACK (1) — 2 / L7-02
- REMOVABLE BOLLARD (2) — 3 / L7-02
- EXPANSION JOINTS — 6 / L7-01
- CONTROL JOINTS — 9 / L7-01
- 36" BLACK VINYL FENCE — 1 / L7-02

NORTH

0 20 40 60

Scale 1" = 20'

VANCOUVER-CLARK PARKS & Recreation

KINGS POND NEIGHBORHOOD PARK

OWNER: CLARK COUNTY Vancouver, Washington

CONTACT: JERRY BARNETT, CLARK COUNTY PUBLIC WORKS Vancouver, Washington (360) 397-6118 EXT.4969

STATE OF WASHINGTON REGISTERED LANDSCAPE ARCHITECT

JEAN K. AKERS CERTIFICATE NO. 1060

SHEET TITLE: LAYOUT PLAN

DATE: 1/11/08

SCALE: 1"=20'-0"

JOB #:

DWG BY: GA

CKD BY: AS

REVISIONS

SHEET NO. L4-01

\Design\PARKS-NEIGHBORHOOD\033823 Kings Pond\00 AutoCAD\06 Construction Drawings\SHEETS\KP L4-01.dwg 4/2/2008 4:08 PM

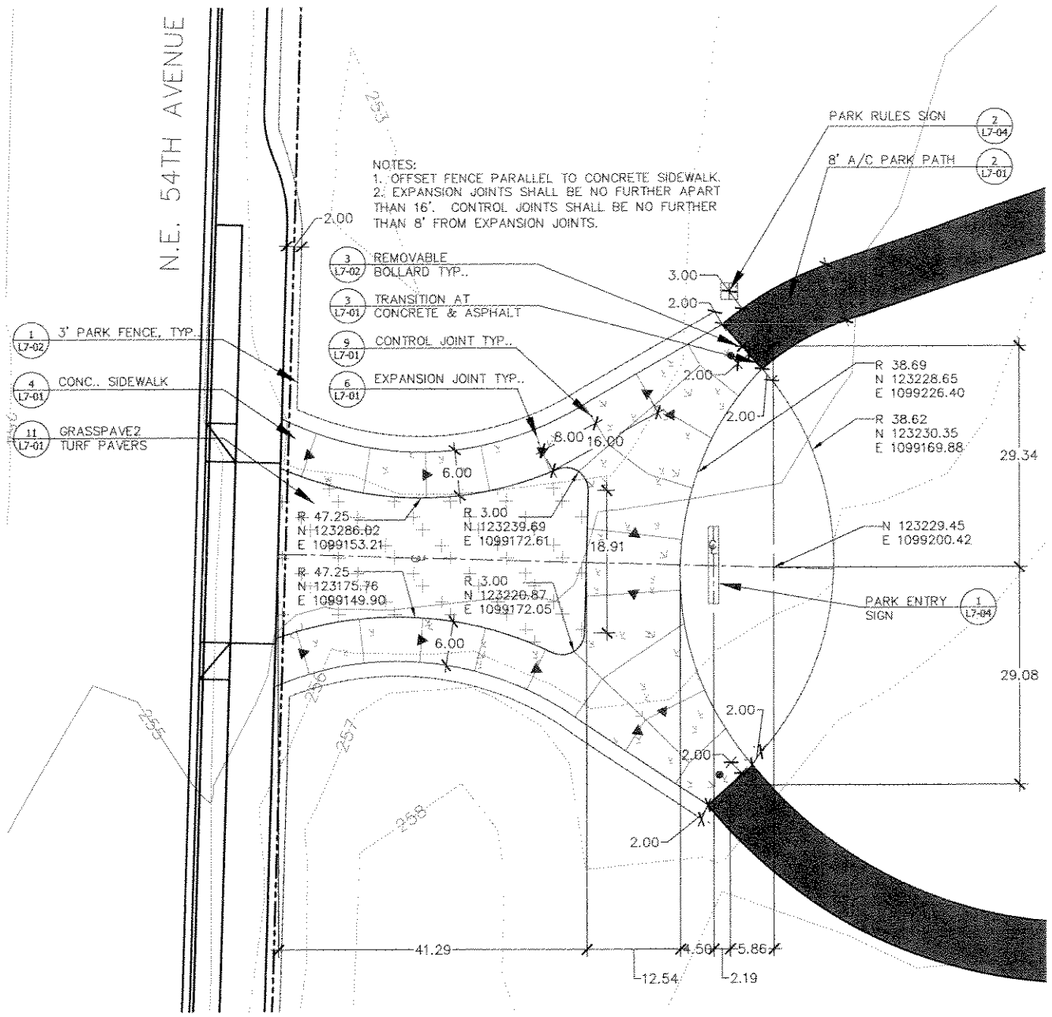

1 ENTRANCE AREA LAYOUT PLAN
SCALE: 1"=10'-0"

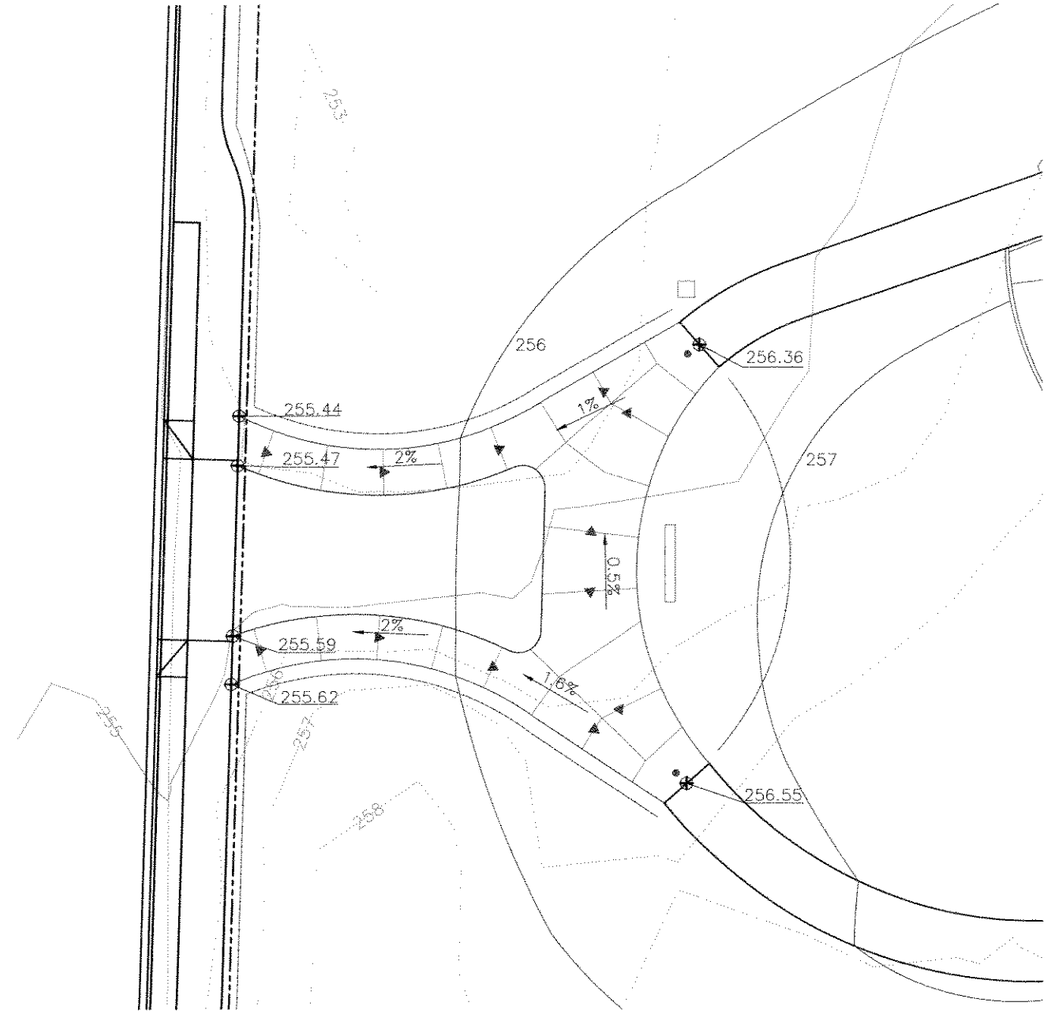

2 ENTRANCE AREA GRADING PLAN
SCALE: 1"=10'-0"

LEGEND

- LIMIT OF WORK
- CONCRETE PATH (100% ADA ACCESSIBLE) — 2 L7-01
- ASPHALT PATH (100% ADA ACCESSIBLE) — 1 L7-01
- WOOD CHIP PLAY SURFACE — 10 L7-01
- GRASSPAVE2 TURF PAVERS — 11 L7-01
- PARK SIGN — 1 L7-04
- PARKS RULES SIGN — 2 L7-04
- HABITAT SIGN — 4 L7-04
- REMOVABLE BOLLARD — 3 L7-02
- EXPANSION JOINTS — 6 L7-01
- CONTROL JOINTS — 9 L7-01
- 36" BLACK VINYL FENCE — 1 L7-02
- PROPOSED 1' CONTOUR
- PROPOSED 5' CONTOUR
- (254) EXISTING SPOT ELEVATION
- 254 PROPOSED SPOT ELEVATION
- TW TOP OF WALL
- BW BOTTOM OF WALL
- TC TOP OF CURB
- BC BOTTOM OF CURB
- HP HIGH POINT
- LP LOW POINT

NORTH

0 10 20 30
Scale 1" = 10'

VANCOUVER-CLARK PARKS & Recreation

KINGS POND NEIGHBORHOOD PARK

OWNER:
CLARK COUNTY
Vancouver, Washington

CONTACT:
JERRY BARNETT, CLARK COUNTY PUBLIC WORKS
Vancouver, Washington (360) 397-6118 EXT.4969

STATE OF WASHINGTON REGISTERED LANDSCAPE ARCHITECT
JEAN K. AKERS
CERTIFICATE NO. 1060

SHEET TITLE
ENTRANCE AREA ENLARGEMENT PLANS

DATE	1/11/08
SCALE	1"=10'-0"
JOB #	
DWG BY:	GA
CKD BY:	AS
REVISIONS	
SHEET NO.	L4-02

I:\Design\PARKS-NEIGHBORHOOD\033823 Kings Pond\00 AutoCAD\06 Construction Drawings\SHEETS\KP L4-02.dwg 4/2/2008 4:08 PM

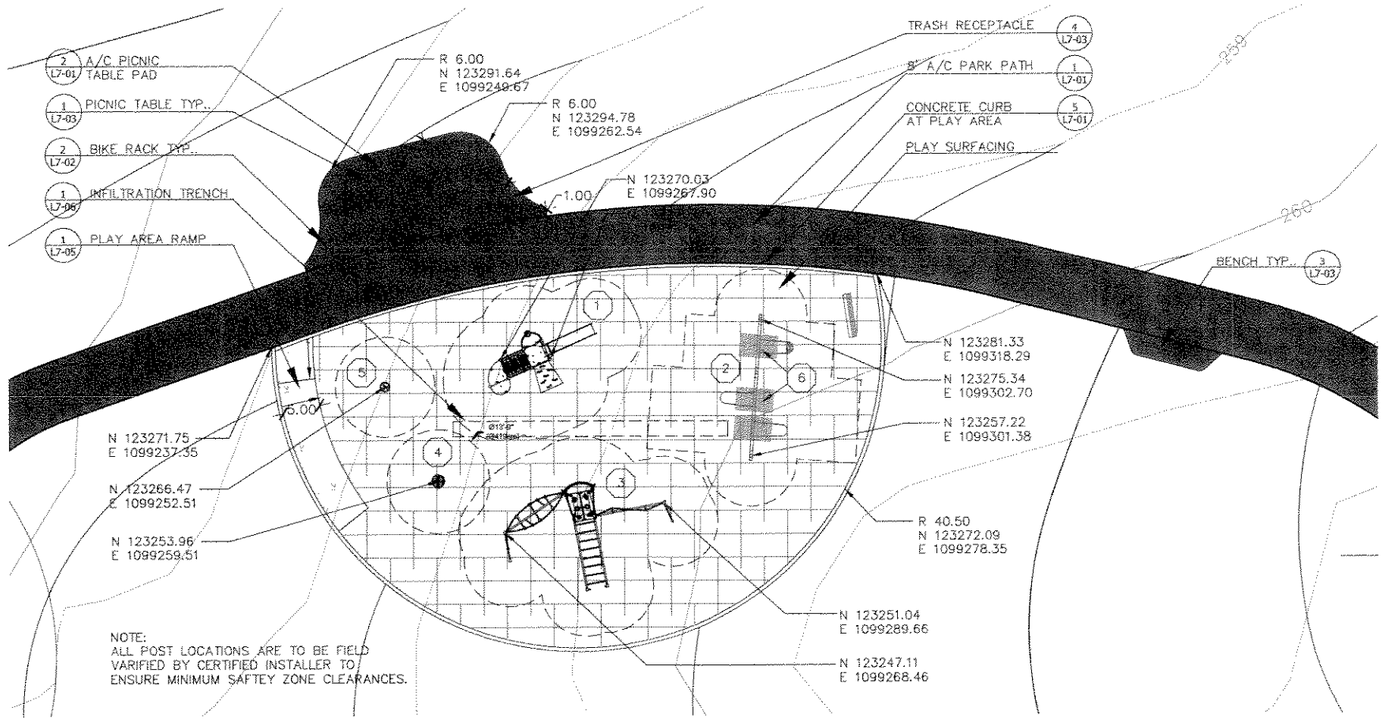

1 PLAY AREA LAYOUT PLAN ENLARGEMENT
SCALE: 1"=10'-0"

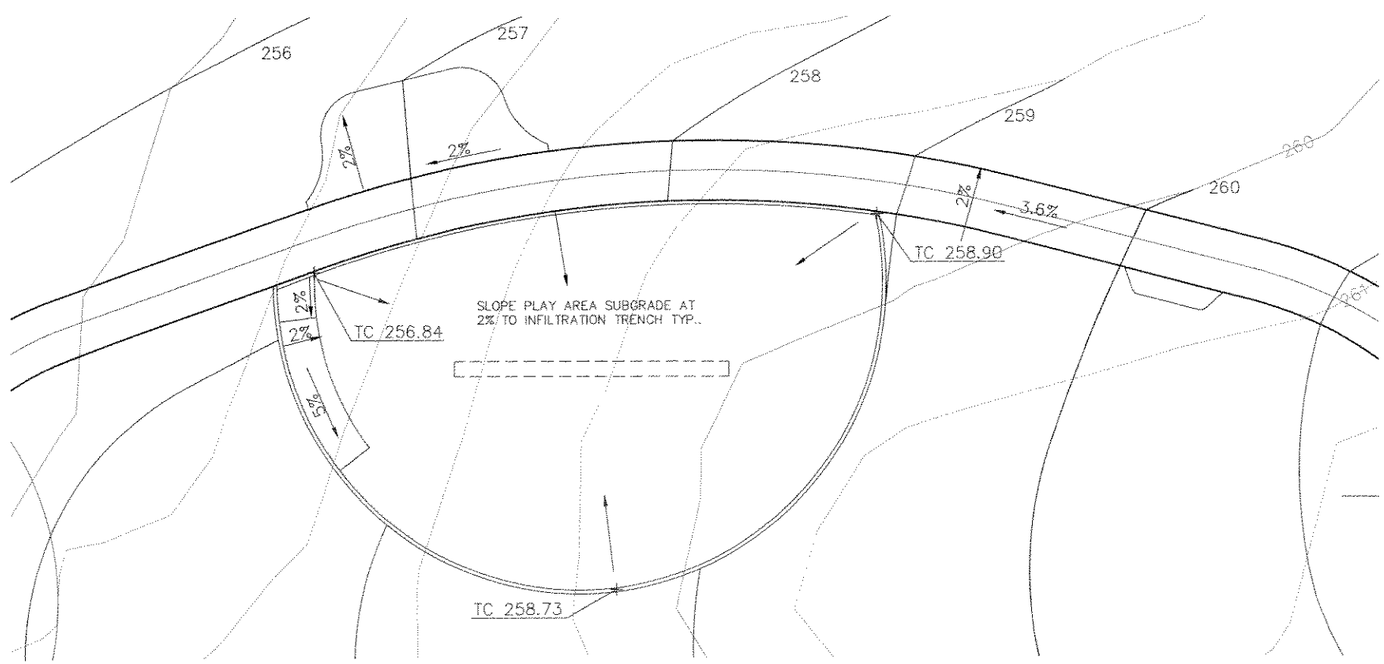

2 PLAY AREA GRADING PLAN ENLARGEMENT
SCALE: 1"=10'-0"

PLAYGROUND EQUIPMENT KEY

1	KOMPAN CUSTOM ELEMENTS STRUCTURE, ELET4900666	4 L7-05
2	COLUMBIA CASCADE SWING, 1583-3	5 L7-05
3	KOMPAN CUSTOM ELEMENTS STRUCTURE, ELE500009	2 L7-06
4	KOMPAN SPINNER BOWL, ELE400024	3 L7-06
5	KOMPAN JUNIOR SPICA, ELE400058	4 L7-06
6	SOFTFALL RUBBER MATTING, 181-005	2 L7-05

LEGEND

	LIMIT OF WORK	
	CONCRETE PATH (100% ADA ACCESSIBLE)	2 L7-01
	ASPHALT PATH (100% ADA ACCESSIBLE)	1 L7-01
	WOOD CHIP PLAY SURFACE	
	PICNIC TABLE – TYPE 2	1 L7-03
	TRASH RECEPTACLE	4 L7-03
	BENCH – TYPE 1	3 L7-03
	BIKE RACK	2 L7-02
	FALL ZONE	
	PROPOSED 1' CONTOUR	
	PROPOSED 5' CONTOUR	
(254)	EXISTING SPOT ELEVATION	
254	PROPOSED SPOT ELEVATION	
TW	TOP OF WALL	
BW	BOTTOM OF WALL	
TC	TOP OF CURB	
BC	BOTTOM OF CURB	
HP	HIGH POINT	
LP	LOW POINT	

NORTH

0 10 20 30
Scale 1" = 10'

VANCOUVER-CLARK PARKS & Recreation

KINGS POND NEIGHBORHOOD PARK

OWNER:
CLARK COUNTY
Vancouver, Washington

CONTACT:
JERRY BARNETT, CLARK COUNTY PUBLIC WORKS
Vancouver, Washington (360) 397-6118 EXT.4969

STATE OF WASHINGTON REGISTERED LANDSCAPE ARCHITECT
JEAN K. AKERS
CERTIFICATE NO. 1060

SHEET TITLE
PLAY AREA ENLARGEMENT PLANS

DATE 1/11/08
SCALE 1"=10'-0"
JOB #
DWG BY: GA
CKD BY: AS

REVISIONS

SHEET NO.
L4-03

I:\Design\PARKS-NEIGHBORHOOD\033823 Kings Pond\00 AutoCAD\06 Construction Drawings\SHEETS\KP L4-03.dwg 4/2/2008 4:08 PM

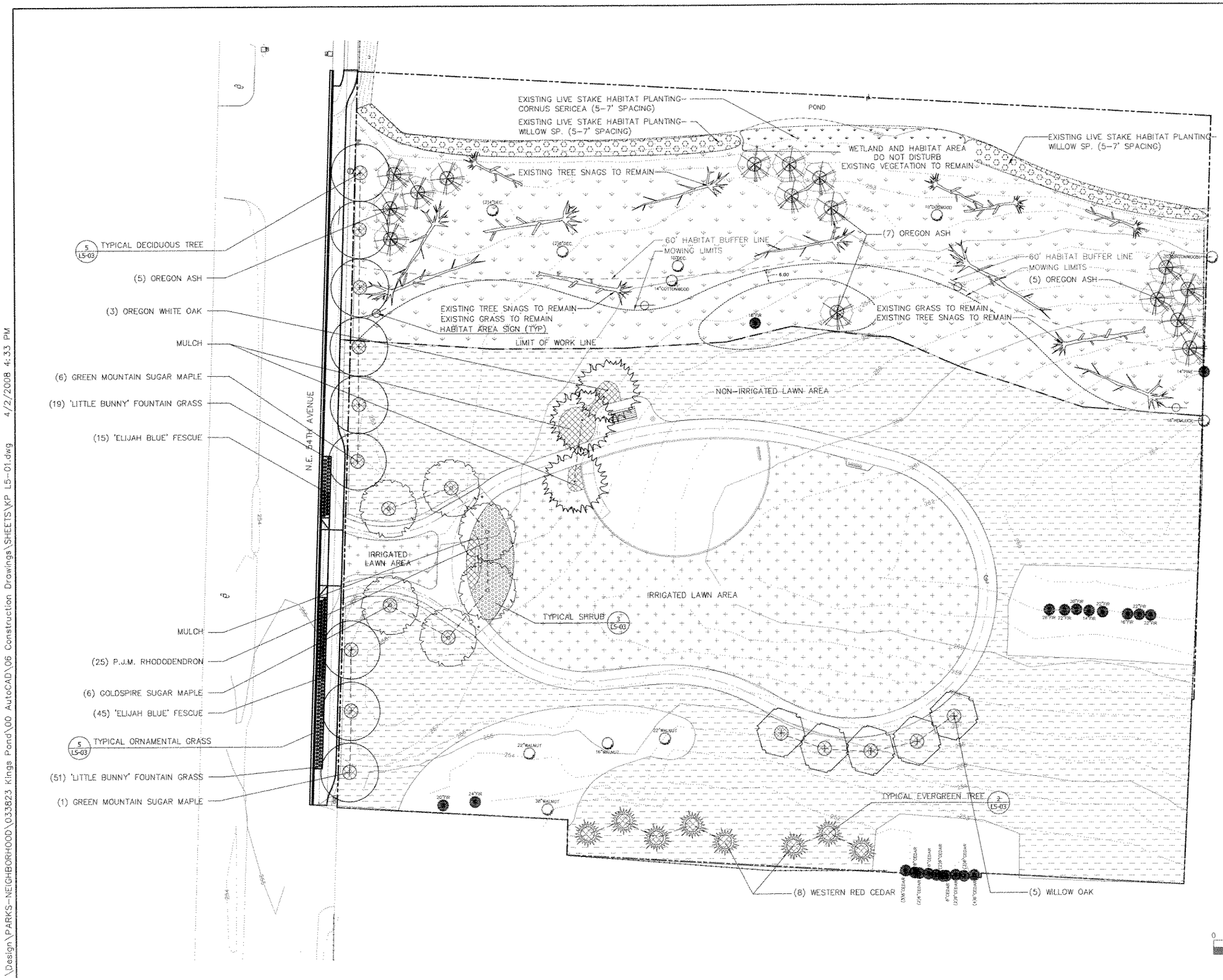

VANCOUVER-CLARK PARKS & Recreation

KINGS POND NEIGHBORHOOD PARK

OWNER:
CLARK COUNTY
Vancouver, Washington

CONTACT:
JERRY BARNETT, CLARK COUNTY PUBLIC WORKS
Vancouver, Washington (360) 397-6118 EXT.4969

STATE OF WASHINGTON REGISTERED LANDSCAPE ARCHITECT
JEAN K. AKERS
CERTIFICATE NO. 1060

SHEET TITLE
PLANTING/HABITAT PLAN

DATE 1/11/08
SCALE 1"=20'-0"
JOB #
DWG BY: GA
CKD BY: AS

REVISIONS

SHEET NO.
L5-01

4/2/2008 4:33 PM
L5-01.dwg
\Design\PARKS-NEIGHBORHOOD\033823 Kings Pond\00 AutoCAD\06 Construction Drawings\SHEETS\KP L5-01.dwg

PLANT SCHEDULE

SYMBOL	QTY.	COMMON NAME	BOTANICAL NAME	SIZE	COMMENTS
TREES					
	7	GREEN MOUNTAIN SUGAR MAPLE	Acer saccharum 'Green Mountain'	2" CAL.	B & B, SPACING AS SHOWN
	9	GOLDSPIRE SUGAR MAPLE	Acer saccharum 'Goldspire'	2" CAL.	B & B, SPACING AS SHOWN
	3	OREGON WHITE OAK	Quercus garryana	2" CAL.	B & B, SPACING AS SHOWN
	5	WILLOW OAK	Quercus phellos	2" CAL.	B & B, SPACING AS SHOWN
	8	WESTERN RED CEDAR	Thuja plicata	6' HT.	B & B, SPACING AS SHOWN
	17	OREGON ASH	FRAXINUS LATIFOLIA	18--36" HT.	CONTAINER, SPCNG AS SHN
ORNAMENTAL GRASSES					
	60	'ELIJAH BLUE' FESCUE	Festuca'Elijah Blue'	1 GAL. POTS	1.5' O.C.
	70	'LITTLE BUNNY' FOUNTAIN GRASS	Pennisetum alopecuroides 'Little Bunny'	1 GAL. POTS	1.5' O.C.
SHRUBS					
	25	P.J.M RHODODENDRON	Rhododendron 'P.J.M.'	1 GAL. POTS	4' O.C.

SYMBOL	QTY.	AREA	TYPE
SEED MIXES			
	17,180 SF	IRRIGATED LAWN AREA	Pro-Time 303 Sun Mix Lawn
	47,232 SF	NON--IRRIGATED LAWN AREA	Companion Dwarf Cover Crop
MULCH			
		PLANTING BEDS AND TREE WELLS	ORGANIC MULCH

VANCOUVER-CLARK PARKS & Recreation

KINGS POND NEIGHBORHOOD PARK

OWNER:
CLARK COUNTY
Vancouver, Washington

CONTACT:
JERRY BARNETT, CLARK COUNTY PUBLIC WORKS
Vancouver, Washington (360) 397-6118 EXT.4969

STATE OF WASHINGTON REGISTERED LANDSCAPE ARCHITECT
JEAN K. AKERS
CERTIFICATE NO. 1060

SHEET TITLE
PLANTING QUANTITIES

DATE 1/11/08
SCALE AS NOTED
JOB #
DWG BY: GA
CKD BY: AS

REVISIONS

SHEET NO.
L5-02

k:\Design\PARKS-NEIGHBORHOOD\033823 Kings Pond\00 AutoCAD\06 Construction Drawings\SHEETS\KP L5-02.dwg 4/2/2008 4:08 PM

NOTE:
SCARIFY BOTTOM AND SIDES OF HOLE
PRIOR TO PLANTING

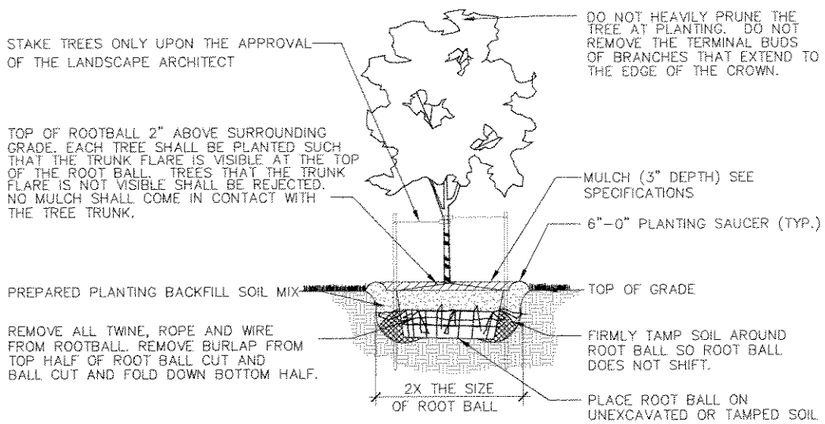

1 DECIDUOUS BALLED/BURLAP TREE PLANTING
SCALE: NTS

NOTE:
SCARIFYING BOTTOM & SIDES OF
HOLE BEFORE PLANTING

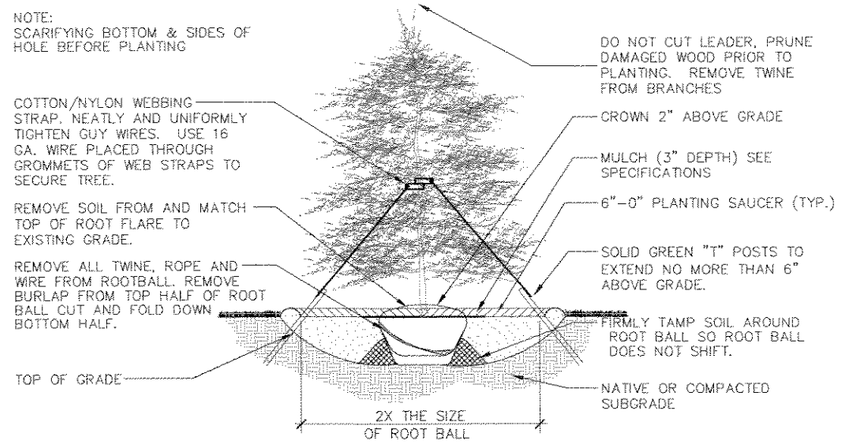

2 EVERGREEN TREE PLANTING DETAIL
SCALE: NTS

NOTE:
SCARIFY BOTTOM & SIDES OF HOLE,
PRIOR TO PLANTING

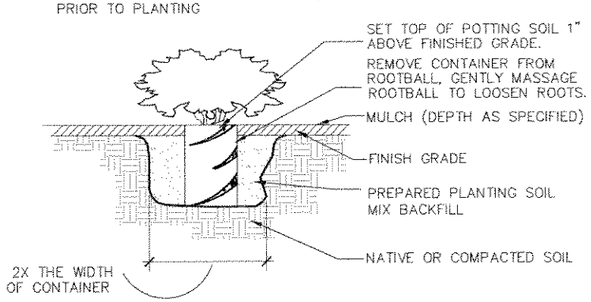

3 SHRUB CONTAINER PLANTING DETAIL
SCALE: NTS

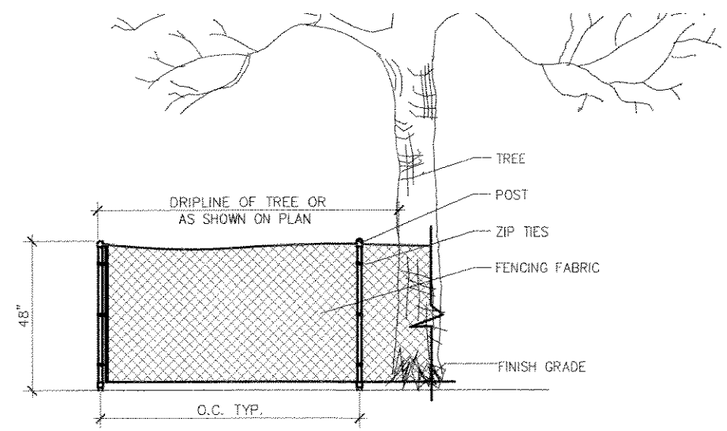

4 TREE PROTECTION FENCE
SCALE: 1/2"=1'-0"

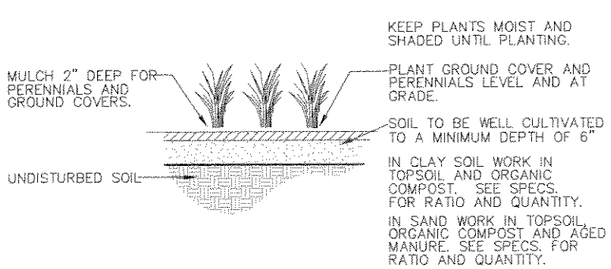

5 PERENNIAL AND GROUND COVER
SCALE: NTS

VANCOUVER-CLARK PARKS & Recreation

KINGS POND NEIGHBORHOOD PARK

OWNER:
CLARK COUNTY
Vancouver, Washington

CONTACT:
JERRY BARNETT, CLARK COUNTY PUBLIC WORKS
Vancouver, Washington (360) 397-6118 EXT.4969

STATE OF WASHINGTON REGISTERED LANDSCAPE ARCHITECT
JEAN K. AKERS
CERTIFICATE NO. 1060

SHEET TITLE
PLANTING DETAILS

DATE 1/11/08
SCALE AS NOTED
JOB #
DWG BY: GA
CKD BY: AS

REVISIONS

SHEET NO.
L5-03

i:\Design\PARKS-NEIGHBORHOOD\033823 Kings Pond\00 AutoCAD\06 Construction Drawings\SHEETS\KP L5-03.dwg 4/2/2008 4:09 PM

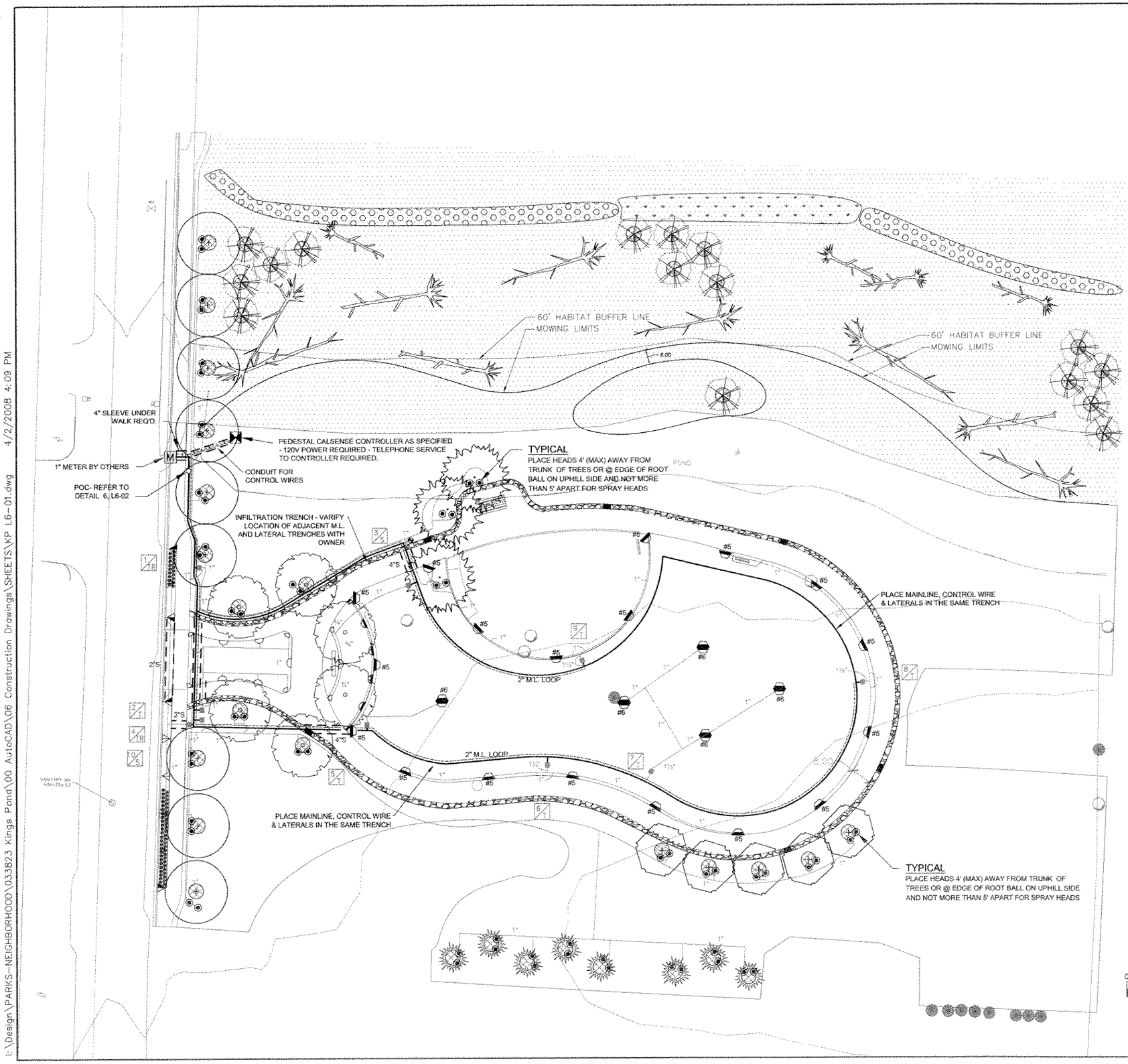

GENERAL KEY

- METER BY OTHERS – REFER TO LOCATION
- POINT OF CONNECTION – REFER TO VANCOUVER/CLARK CITY PARKS & RECREATION STANDARD DETAILS
- 1" APPROVED DCV – REFER TO VANCOUVER/CLARK CITY PARKS & RECREATION STANDARD DETAILS
- 1" BRASS FLOW SENSOR – REFER TO VANCOUVER/CLARK CITY PARKS & RECREATION STANDARD DETAILS
- 3034 PVC SLEEVES AS NOTED
- CLASS 200 MAINLINE AS NOTED
- CLASS 200 LATERALS
- BRASS ISOLATION VALVES AS NOTED WITH UNIONS
- 1" MANUAL DRAIN VALVE
- RAINBIRD 44LRC QUICK-COUPLER
- RAINBIRD PEB ELECTRIC CONTROL VALVE
- 14 GA. CONTROL VALVE WIRE
- (2 PAIR) 14 GA. WIRE FROM P.O.C. TO CONTROLLER
- CONTROLLER I.D. & CONTROL VALVE NUMBER T=TURF, S=SHRUB, TR=TREES
- CALSENSE ET2000E-12-RRE-TP7(PACKAGE)-SSE-R (VERIFY W/ OWNER OTHER OPTION)

HEAD KEY

HEAD	COMPANY & CAT. NO.	RADIUS	G.P.M.	P.S.I.
	HUNTER PCN20	BUBBLER	.25	30
	HUNTER MPSTRIP ROTATOR R/F/L 4X12'R&L/4X24'F	.4-1.6		30
	HUNTER INST-06-CV-15 H/Q	15'	.93-1.86	30
	HUNTER INST-06-CV-17 H/Q	17'	.93-1.86	30
	HUNTER I-20-6PADS & 36S	ADJ.	#5=3.5/#6=4.8	40

VALVE KEY

CONTROL VALVE NO. T=TURF, S=SHRUB, TR=TREE	1TR	2T	3S	4TR	5T	6T	7T	8T	9T	10S
G.P.M.	6	11	8	10	17	23	18	20	19	2
CONTROL VALVE SIZE	1.0	1.0	1.0	1.0	1.0	1.0	1.0	1.0	1.0	1.0

DESIGN CRITERIA FOR THIS PROJECT

- THE DESIGN OF THE IRRIGATION SYSTEM IS BASED ON 50 PSI @ 25 G.P.M.

GENERAL NOTES

- THE CONTRACTOR SHALL INSPECT THE SITE AND VERIFY SITE CONDITIONS AND DIMENSIONS PRIOR TO CONSTRUCTION.
- IRRIGATION PLANS ARE SCHEMATIC REPRESENTATION ONLY. PLACE LINES IN A COMMON TRENCH WHENEVER POSSIBLE. FIELD ADJUST LINE LOCATIONS TO AVOID CONFLICT WITH UTILITIES.
- IRRIGATION IS COORDINATED WITH THE PLANTING PLAN AND SITE IMPROVEMENTS AND IS DESIGNED WITH TRIANGULAR SPACING GIVING HEAD TO HEAD COVERAGE. COORDINATE IRRIGATION HEAD LAYOUT WITH NEW PLANT MATERIALS. LOCATE SPRAY HEADS 30" FROM BASE OF TREE. DO NOT ALTER HEAD LOCATION, PIPE LAYOUT, OR VALVE LOCATION WITHOUT WRITTEN APPROVAL FROM THE OWNER. NOTIFY THE OWNER IF DESCREPANCIES OCCUR BETWEEN THE PLANS AND FIELD CONDITIONS.
- ALL COMPONENTS OF IRRIGATION SYSTEM SHALL BE INSTALLED TO PROVIDE UNIFORM HEAD TO HEAD COVERAGE – AND MINIMIZE SPRAY ON WALK AREAS.
- ALL PIPE SIZES ARE MINIMUMS. CONTRACTOR MAY NOT DECREASE PIPE SIZES. UNISIZE PIPING HAS BEEN USED THROUGHOUT THE DESIGN.
- INSTALL ALL IRRIGATION PIPE & CONTROL VALVE WIRES IN PVC SLEEVES UNDER ALL HARD SURFACES. INSTALL SLEEVES PRIOR TO PLACEMENT OF SUBGRADE MATERIAL & PAVING.
- COORDINATE IRRIGATION POC & LOCATION OF CONTROL VALVE LOCATIONS W/ OWNERS REP.
- CONTRACTOR TO PROGRAM AUTOMATIC CONTROLLER TO DELIVER 1" OF WATER PER WEEK / PRIOR TO SYSTEM GOING ONLINE W/ CENTRAL CONTROL FEATURE.
- ALL PIPES SHALL BE TRENCHED. PROVIDE POSITIVE DRAINAGE OF MAINLINE. PLACE MANUAL DRAIN AT LOW POINT ON MAINLINE. SHOW LOCATIONS ON AS-BUILT DRAWINGS.
- CONTRACTOR TO INSTALL CONTROLLER AS DETAILED. COORDINATE THE INSTALLATION OF 120V POWER AND TELEPHONE. OWNER WILL WIRE ALL INTERNAL COMPONENTS.
- WATER METERS WILL BE PROVIDED BY OWNER.
- REFER TO SPECIFICATIONS FOR FUTHER REQUIREMENTS.
- FROM CONTROLLER – PROVIDE (2) 14 GAUGE CONTROL WIRES IN EACH DIRECTION TO LAST CONTROL VALVE IN EACH DIRECTION ON MAINLINE LOOP.
- HOLD SPRINKLER HEADS A MIN. OF 1" FROM EDGES OF ALL HARD SURFACES.
- RAINBIRD SERIES BODIES TO BE # 1806-PRS-SAM FOR SHRUB AREAS AND 1804-PRS-SAM FOR SPRAY HEADS AS NOTED AROUND NEW TREES.
- INSTALL VALVE BOXES PERPENDICULAR TO WALLS, WALKS AND CURBS.
- WHEN PLACING MORE THAN ONE PIPE IN A TRENCH, ALLOW A MIN. OF 4" BETWEEN PIPES.
- INSTALL HEADS PERPENDICULAR TO SLOPES OF FINISH GRADE.
- ONE VALVE PER VALVE BOX.
- INSTALL HEADS FLUSH WITH TOP OF WALLS, WALKS AND CURBS.
- ADJUST HEAD LOCATION AS REQUIRED TO AVOID TREES, SIGNS, LIGHT POLES AND OTHER FIXED OBJECTS.
- SINGLE BARE #14 GAUGE TRACE WIRE REQUIRED ON TOP OF ALL MAINLINE.
- TWO STOP GLUE REQUIRED ON ALL PVC MAINLINE.

NORTH

0 20 40 60

Scale 1" = 20'

STATE OF WASHINGTON REGISTERED LANDSCAPE ARCHITECT

HAL BEIGHLEY
CERTIFICATE NO. 1399

VANCOUVER-CLARK PARKS & Recreation

KINGS POND NEIGHBORHOOD PARK

OWNER:
CLARK COUNTY
Vancouver, Washington

APPLICANT:
Vancouver-Clark Parks & Recreation Department
Vancouver, Washington (360) 696-8171

BEIGHLEY & ASSOCIATES INC.
IRRIGATION CONSULTING AND DESIGN

12840 N.W. CORNELL RD.
PORTLAND, OR 97229
PHONE: 503 643-4798
FAX: 503 643-4798

SHEET TITLE
IRRIGATION PLAN

DATE	11-5-07
SCALE	1"=20'-0"
JOB #	757
DWG BY:	RCD
CKD BY:	HSB

REVISIONS

SHEET NO.
L6-01

I:\Design\PARKS-NEIGHBORHOOD\033823 Kings Pond\00 AutoCAD\06 Construction Drawings\SHEETS\KP L6-01.dwg 4/2/2008 4:09 PM

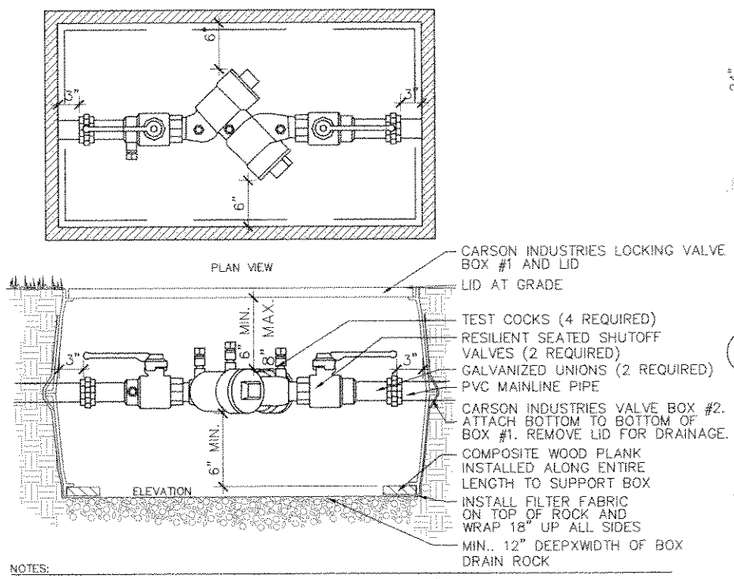

NOTES:

1. REFERENCE CITY OF VANCOUVER DRAWING W-15 (1994) FOR ADDITIONAL INFORMATION.
2. APPROVED DOUBLE CHECK VALVE ASSEMBLY TO LAY HORIZONTAL WITH GROUND.
3. DESIGNED FOR BACK SIPHONAGE AND BACK PRESSURE.
4. TEST COCKS TO EITHER FACE OUTWARDS OR UPWARDS FROM ASSEMBLY.
5. THOROUGHLY FLUSH LINES PRIOR TO INSTALLATION OF BACKFLOW PREVENTER.
6. THE DCVA MAY BE INSTALLED ABOVE OR BELOW THE GROUND PROVIDED ALL CLEARANCES ARE MET.
7. DO NOT INSTALL IN AN AREA SUBJECT TO FLOODING.
8. MUST BE ACCESSIBLE.
9. MUST BE PROTECTED FROM FREEZING CONDITIONS.
10. THE BACKFLOW ASSEMBLY SHALL BE A STATE APPROVED MODEL.
11. A PLUMBING PERMIT IS REQUIRED- PLEASE CONTACT YOUR LOCAL PLUMBING PERMIT CENTER.
12. MUST BE TESTED AFTER INSTALLATION AND YEARLY THEREAFTER BY A WASHINGTON STATE CERTIFIED BACK FLOW ASSEMBLY TESTER. TEST RESULTS SHALL BE SENT TO THE CITY OF VANCOUVER WATER DEPARTMENT.
13. INSTALL PAVER BLOCKS UNDER VALVE BOX. SEE DETAIL ?/? FOR REQUIREMENTS.
14. INSTALL FILTER FABRIC ABOVE DRAIN ROCK AND BELOW VALVE BOX AND WRAP 18" UP SIDES OF BOX.

3 DOUBLE CHECK VALVE
SCALE: NTS

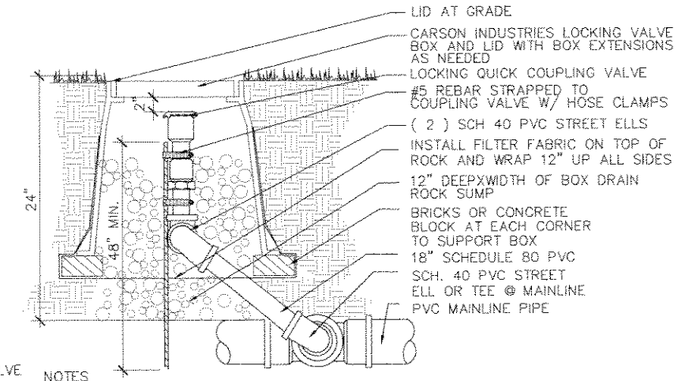

NOTES

1. WRAP ALL THREADED FITTINGS W/ 5 WRAPS OF TEFLON TAPE.
2. SWING JOINT SIZE SHALL BE SAME SIZE AS VALVE BOTTOM INLET.

1 QUICK COUPLING VALVE
SCALE: NTS

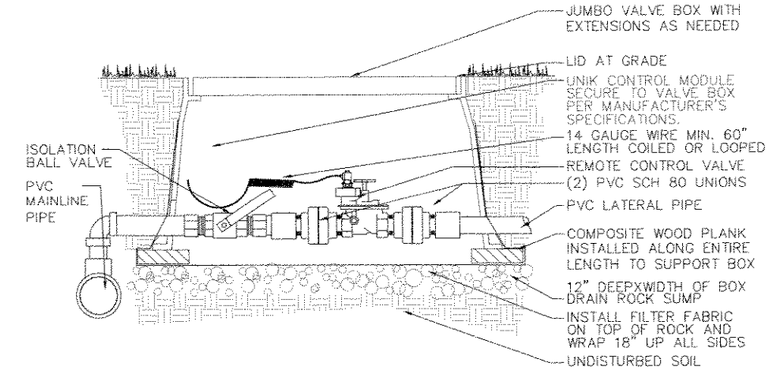

2 AUTOMATIC CONTROL VALVE
SCALE: NTS

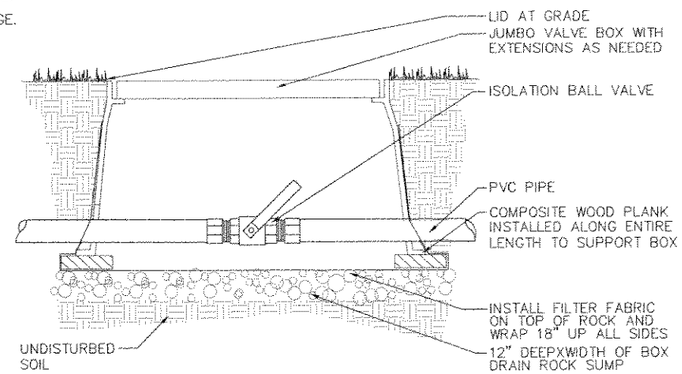

4 ISOLATION BALL VALVE
SCALE: NTS

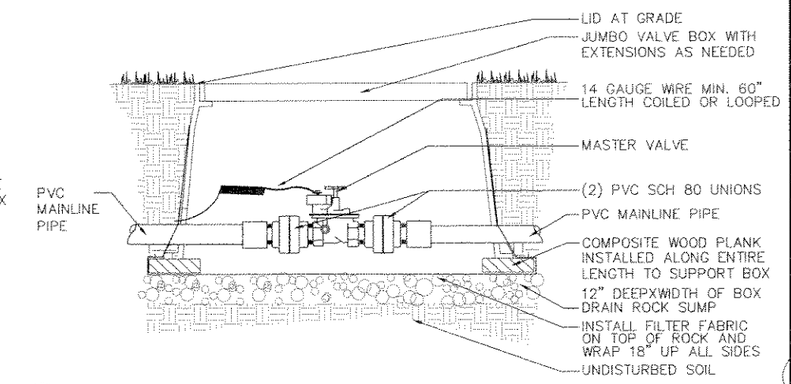

5 MASTER VALVE
SCALE: NTS

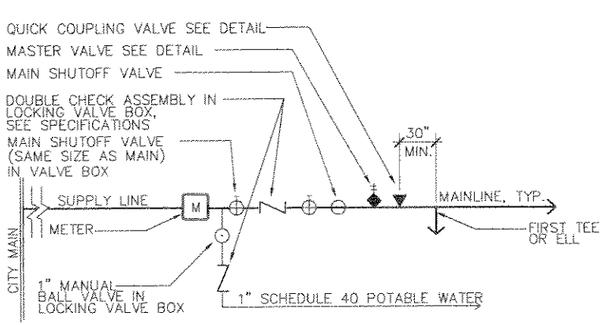

6 POINT OF CONNECTION
SCALE: NTS

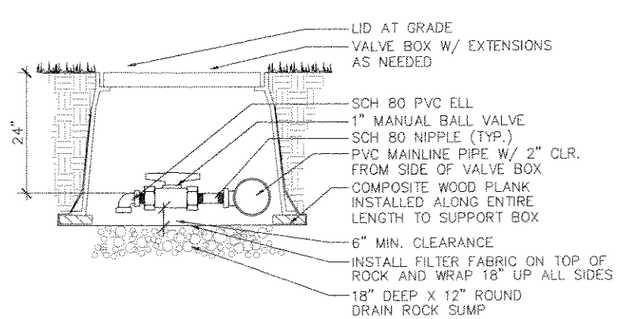

NOTE:

1. CONTRACTOR RESPONSIBLE FOR LOCATING DRAIN VALVE AT LOWEST POINT(S) OF MAINLINE TO ENSURE POSITIVE DRAINAGE
2. ALLOW FOR 1" CLEARANCE FROM HOLE IN BOX TO TOP OF PIPE

7 MANUAL DRAIN VALVE
SCALE: NTS

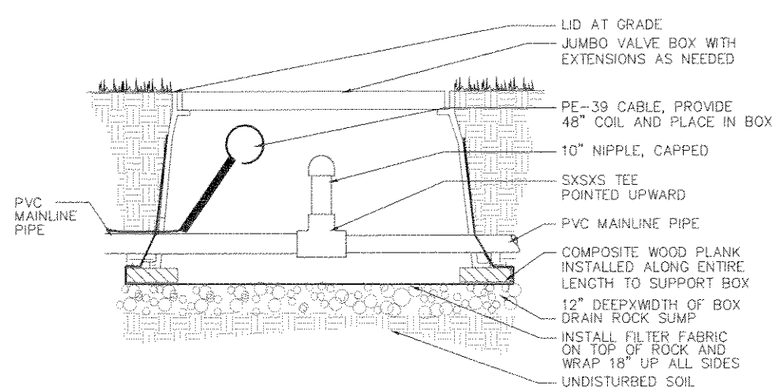

8 FUTURE VALVE FLOW ASSEMBLY
SCALE: NTS

VANCOUVER-CLARK PARKS & Recreation

KINGS POND NEIGHBORHOOD PARK

OWNER: CLARK COUNTY Vancouver, Washington

CONTACT: JERRY BARNETT, CLARK COUNTY PUBLIC WORKS Vancouver, Washington (360) 397-6118 EXT.4969

STATE OF WASHINGTON REGISTERED LANDSCAPE ARCHITECT
JEAN K. AKERS
CERTIFICATE NO. 1060

SHEET TITLE
IRRIGATION DETAILS

DATE 1/11/08
SCALE AS NOTED
JOB #
DWG BY: GA
CKD BY: AS

REVISIONS

SHEET NO.
L6-02

4/2/2008 4:09 PM

I:\Design\PARKS-NEIGHBORHOOD\033823 Kings Pond\00 AutoCAD\06 Construction Drawings\SHEETS\KP L6-02.dwg

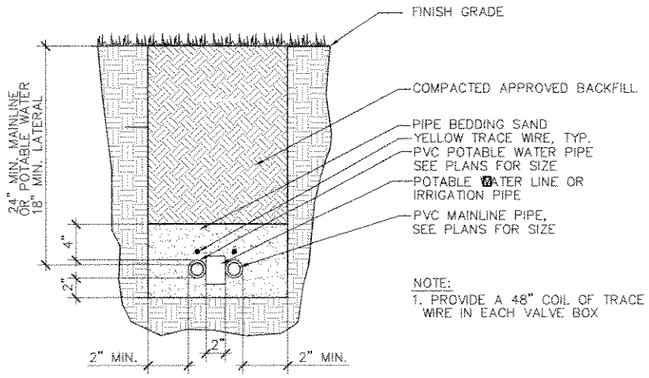

NOTE:
1. PROVIDE A 48" COIL OF TRACE WIRE IN EACH VALVE BOX

1 TRENCHING DETAIL
SCALE: NTS

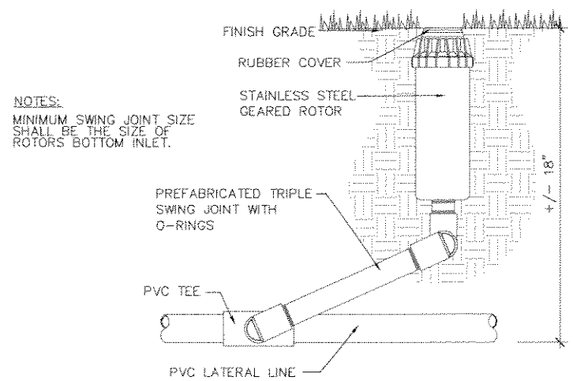

NOTES:
MINIMUM SWING JOINT SIZE SHALL BE THE SIZE OF ROTORS BOTTOM INLET.

2 ROTOR HEAD
SCALE: NTS

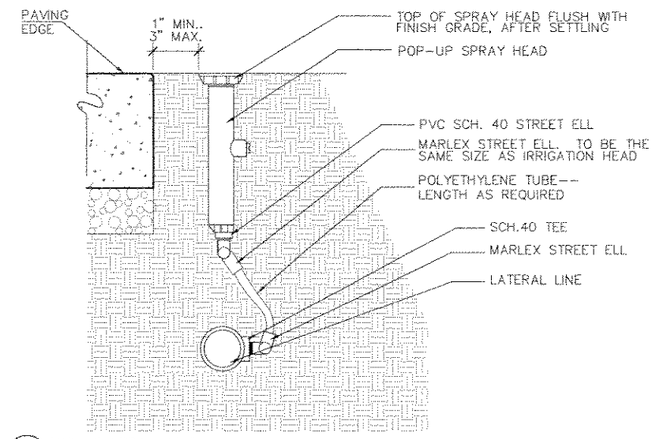

3 POP-UP SPRAY HEAD
SCALE: NTS

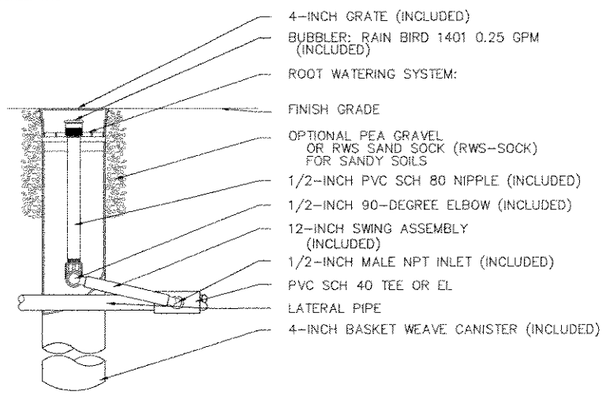

4 TREE ROOT WATERING SYSTEM
SCALE: NTS

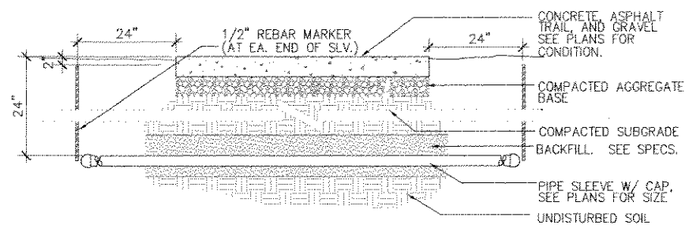

NOTE:
1. PROVIDE TRACER WIRE AT ALL PIPE SLEEVING.

5 PIPE SLEEVING
SCALE: NTS

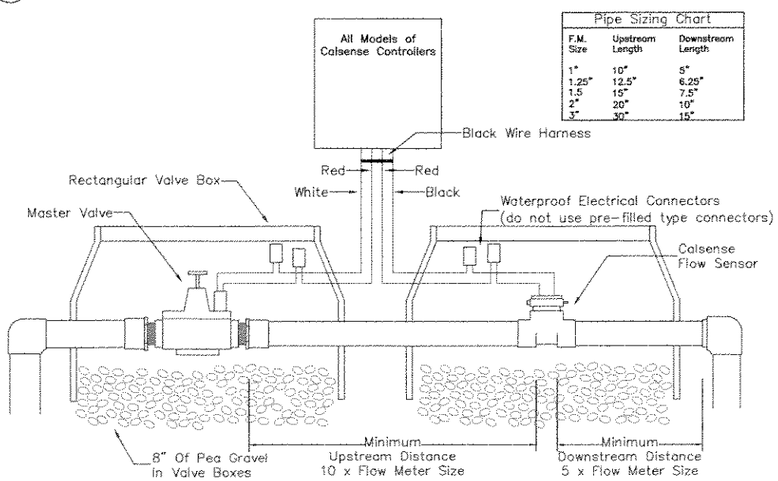

Pipe Sizing Chart

F.M. Size	Upstream Length	Downstream Length
1"	10"	5"
1.25"	12.5"	6.25"
1.5	15"	7.5"
2"	20"	10"
3"	30"	15"

NOTE: MASTER VALVE SHALL BE NORMALLY OPEN.

6 MASTER VALVE/FLOW SENSOR INSTALLATION DETAIL
SCALE: NTS

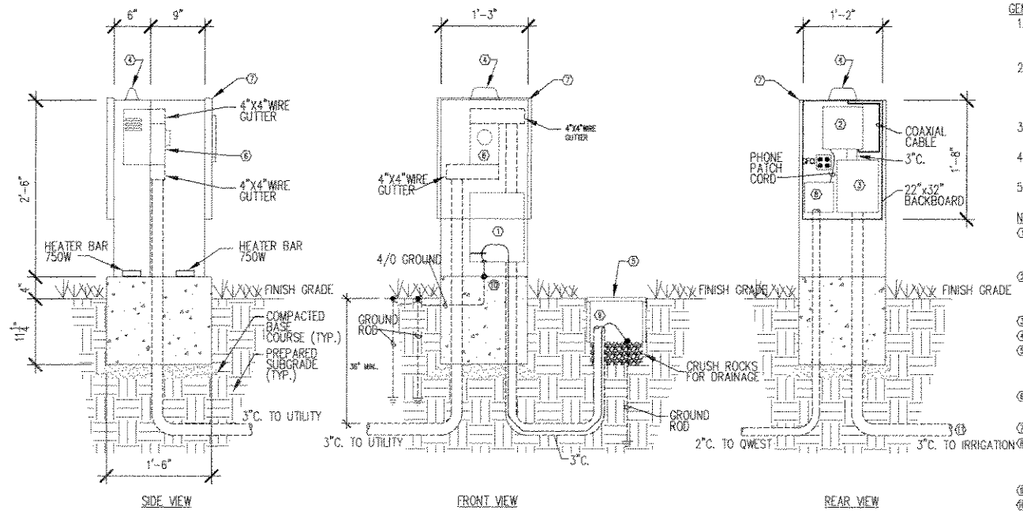

GENERAL NOTES:
1. POWER COMPANY CONTACT:
   CPUD – CLARK CO. PUD
   GREG FRY – 360.992.8860
2. TELEPHONE COMPANY CONTACT:
   QUEST
   RON IMAI – 360.699.3546
   360-936-1459 CELL
3. TERMINALS SHALL BE SIZED FOR CONDUCTOR SIZES SHOWN ON PLANS.
4. CONTRACTOR SHALL VERIFY AVAILABLE FAULT CURRENT FOR BREAKER INTERRUPT CAPACITY.
5. PROVIDE GROUND RODS PER NEC.

NOTES:
① LOAD CENTER (12)20A/1P CIRCUIT BREAKERS WITH SQUARE D, SIEMENS, GE, CUTLER HAMMER OR EQUAL.
② CALSENSE 2000e-12-R-RRE
   MPS-E24-10K METERED ENCLSRE
   SSE-R/SSE-PED
③ CALSENSE TP-1 TRANSIENT PROTECTION.
④ CALSENSE DOME ANTENNA.
⑤ BROOKS PRODUCTS 36 SERIES PULL BOX. WITH 36-T CAST IRON TRAFFIC COVER. COVER MARK "POWER".
⑥ METER BASE SQUARE D, CIRCLE AW OR EQUAL. INSTALL PER CPUD STANDARD M.
⑦ STRONG BOX CABINET SB-24CR/120V.
⑧ RJ-11 PHONE JACK AND UTILITY INTERFACE. COORDINATE W/SERVICE UTILITY FOR EXACT REQUIREMENTS.
⑨ CAP 3" CONDUIT. FOR FUTURE WIRING.
⑩ BOND ALL EQUIPMENT WITHIN ENCLOSURE.
⑪ STUB 3"C. FOR IRRIGATION CONTROL LINES. COORDINATE WITH ENGINEER.

7 IRRIGATION & METER BASE ENCLOSURE
SCALE: NTS

VANCOUVER-CLARK PARKS & Recreation

KINGS POND NEIGHBORHOOD PARK

OWNER:
CLARK COUNTY
Vancouver, Washington

CONTACT:
JERRY BARNETT, CLARK COUNTY PUBLIC WORKS
Vancouver, Washington (360) 397-6118 EXT.4969

STATE OF WASHINGTON REGISTERED LANDSCAPE ARCHITECT
JEAN K. AKERS
CERTIFICATE NO. 1060

SHEET TITLE
IRRIGATION DETAILS

DATE 1/11/08
SCALE AS NOTED
JOB #
DWG BY: GA
CKD BY: AS

REVISIONS

SHEET NO.
L6-03

I:\Design\PARKS-NEIGHBORHOOD\033823 Kings Pond\00 AutoCAD\06 Construction Drawings\SHEETS\KP L6-03.dwg 4/3/2008 10:52 AM

SPECIFICATIONS – ELECTRICAL

BASIC ELECTRICAL MATERIALS AND METHODS

1. THE INTENT OF DIVISION 16 SPECIFICATIONS AND THE ACCOMPANYING DRAWINGS IS TO PROVIDE A COMPLETE AND WORKABLE FACILITY WITH COMPLETE SYSTEMS AS SHOWN, SPECIFIED AND REQUIRED BY APPLICABLE CODES. INCLUDE ALL WORK SPECIFIED IN DIVISION 16 AND SHOWN ON THE ACCOMPANYING DRAWINGS, INCLUDING APPURTENANCES, CONNECTIONS, ETC., IN THE FINISHED JOB.

2. THE DIVISION 16 SPECIFICATIONS AND THE ACCOMPANYING DRAWINGS ARE COMPLEMENTARY AND WHAT IS CALLED FOR BY ONE SHALL BE AS BINDING AS IF CALLED FOR BY BOTH. ITEMS SHOWN ON THE DRAWINGS ARE NOT NECESSARILY INCLUDED IN THE SPECIFICATIONS AND VICE VERSA.

3. THE CONTRACTOR SHALL VISIT THE SITE PRIOR TO BIDDING AND BECOME FAMILIAR WITH EXISTING CONDITIONS AND ALL OTHER FACTORS WHICH MAY AFFECT THE EXECUTION OF THE WORK. INCLUDE ALL RELATED COSTS IN THE INITIAL BID PROPOSAL.

4. VERIFY THE PHYSICAL DIMENSION OF EACH ITEM OF ELECTRICAL EQUIPMENT TO FIT THE AVAILABLE SPACE. COORDINATION OF THE EQUIPMENT TO FIT INTO THE AVAILABLE SPACE AND THE ACCESS ROUTES THROUGH THE CONSTRUCTION SHALL BE THE CONTRACTOR'S RESPONSIBILITY.

5. COORDINATE ALL ASPECTS OF THE ELECTRICAL, TELEPHONE, AND OTHER UTILITY SERVICES WITH THE APPROPRIATE SERVING UTILITY. NO ADDITIONAL COMPENSATION WILL BE ALLOWED THE CONTRACTOR FOR CONNECTION FEES OR ADDITIONAL WORK OR EQUIPMENT NOT COVERED IN THE DRAWINGS OR SPECIFICATIONS WHICH ARE A RESULT OF POLICIES OF THE SERVING UTILITY.

6. COORDINATE UNDERGROUND WORK WITH OTHER CONTRACTORS WORKING ON THE SITE. PARTICULAR COORDINATION SHALL BE PERFORMED WITH CONTRACTORS INSTALLING STORM SEWER, SANITARY SEWER, WATER AND IRRIGATION LINES TO AVOID CONFLICTS. COMMON TRENCHES MAY BE USED WITH OTHER TRADES, PROVIDING CLEARANCES REQUIRED BY CODES AND ORDINANCES ARE MAINTAINED.

7. COORDINATE WORK WITH EXISTING UNDERGROUND AND OVERHEAD UTILITIES. BONNEVILLE POWER ADMINISTRATION (BPA) TRANSMISSION LINE TOWERS ARE NOT TO BE ACCESSED UNLESS APPROVED IN WRITING BY BPA AND THE ARCHITECT.

8. PROVIDE A WRITTEN WARRANTY COVERING THE WORK DONE UNDER THIS DIVISION AS REQUIRED BY THE GENERAL CONDITIONS. FROM THIS WARRANTY.

9. COORDINATE SUBMITTALS WITH THE REQUIREMENTS OF DIVISION 1.

10. COORDINATE O&M MANUAL REQUIREMENTS WITH THE REQUIREMENTS OF DIVISION 1.

11. ALL SUPPLEMENTAL COST PROPOSALS BY THE CONTRACTOR SHALL BE ACCOMPANIED WITH A COMPLETE ITEMIZED BREAKDOWN OF LABOR AND MATERIALS WITHOUT EXCEPTION. AT THE ARCHITECT'S REQUEST, CONTRACTOR'S ESTIMATING SHEETS FOR THE SUPPLEMENTAL COST PROPOSALS SHALL BE MADE AVAILABLE TO THE ARCHITECT. LABOR MUST BE SEPARATED AND ALLOCATED FOR EACH ITEM OF WORK.

12. PROVIDE A COMPLETE PROPERLY OPERATING SYSTEM FOR EACH ITEM OF EQUIPMENT CALLED FOR UNDER THIS WORK. INSTALLATIONS SHALL BE IN ACCORD WITH THE EQUIPMENT MANUFACTURER'S INSTRUCTIONS, THE BEST INDUSTRY PRACTICES AND THE CONTRACT DOCUMENTS. WHERE A CONFLICT IN THESE GUIDES APPEAR, THE ARCHITECT SHALL BE REQUESTED TO PROVIDE PROPER CLARIFICATION BEFORE WORK IS ROUGHED IN AND THE ARCHITECT'S DECISION WILL BE FINAL. WORK INSTALLED WITHOUT SUCH CLARIFICATION SHALL BE REMOVED AND CORRECTED BY THE CONTRACTOR AT NO COST TO THE OWNER.

13. PERFORM ALL NECESSARY EXCAVATION AND BACKFILL FOR THE INSTALLATION OF ELECTRICAL WORK IN COMPLIANCE WITH DIVISION 2.

14. PROVIDE COMPLETE ELECTRICAL CONNECTIONS FOR ALL ITEMS OF EQUIPMENT REQUIRING SUCH CONNECTIONS, INCLUDING INCIDENTAL WIRING, MATERIALS, DEVICES, AND LABOR NECESSARY FOR A FINISHED WORKING INSTALLATION.

15. PROTECT ALL ELECTRICAL WORK AND EQUIPMENT INSTALLED UNDER THIS DIVISION AGAINST DAMAGE BY OTHER TRADES, WEATHER CONDITIONS, OR ANY OTHER CAUSES. EQUIPMENT FOUND DAMAGED OR IN OTHER THAN NEW CONDITION WILL BE REJECTED AS DEFECTIVE.

16. UPON COMPLETION, SYSTEMS SHALL BE TESTED TO SHOW THE EQUIPMENT INSTALLED OPERATES AS DESIGNED AND SPECIFIED, FREE OF FAULTS AND UNINTENTIONAL GROUNDS. THE SYSTEM TESTS SHALL BE SET UP FOR AS MANY AT ONE TIME AS POSSIBLE TO WORK INTO CONSTRUCTION PHASING. TESTS SHALL BE DONE IN THE PRESENCE OF THE ARCHITECT OR HIS REPRESENTATIVE, AND SHALL BE SCHEDULED 48 HOURS IN ADVANCE.

17. PAYMENT WILL BE MADE IN ACCORDANCE WITH WSDOT STANDARD SPECIFICATIONS SECTION 1-04.1, FOR EACH OF THE FOLLOWING BID ITEMS THAT ARE INCLUDED IN THE PROPOSAL:
?SITE ELECTRICAL SYSTEM (___)?, LUMP SUM. PAYMENT INCLUDES ALL WORK ASSOCIATED WITH FURNISHING AND INSTALLING THE ELECTRICAL SYSTEM PER THE PLANS AND SPECIFICATIONS, INCLUDING BUT NOT LIMITED TO EARTHWORK, TRENCHING, PANELS AND SWITCHES, CONDUITS, RACEWAYS, BOXES, CONDUCTORS, CONNECTORS, WIRING DEVICES AND PLATES, IDENTIFICATION MARKERS, SECONDARY DISTRIBUTION SYSTEM, AND GROUNDING.

18. CONDUITS – PROVIDE RACEWAYS AND CONDUITS OF METALLIC AND NON-METALLIC, FOR ALL ELECTRICAL SYSTEMS WIRING, EXCEPT WHERE CLEARLY SHOWN OR SPECIFIED OTHERWISE. ALL FITTINGS, BOXES, HANGERS AND APPURTENANCES SHALL BE INCLUDED. PRECAST UNITS SHALL CONFORM TO ASTM C478. SIZE, PLAN AREA AND CLEAR HEIGHT SHALL NOT BE LESS THAN SHOWN ON THE DRAWINGS.

19. CONDUCTORS – CONDUCTOR SIZES SHOWN ON DRAWINGS ARE SIZED FOR COPPER AND SHALL BE CONSIDERED MINIMUM FOR AMPACITIES AND VOLTAGE DROP REQUIREMENTS.
CONDUCTORS FOR SPECIAL SYSTEMS SHALL BE AS RECOMMENDED BY THE EQUIPMENT MANUFACTURER EXCEPT AS NOTED. DELIVER CONDUCTORS TO THE JOB SITE IN CARTONS, PROTECTIVE COVERS, OR ON REELS. PROVIDE CONDUIT AND WIRE FOR ALL ELECTRICAL WORK EXCEPT FOR RESIDENCE BUILDING. PROVIDE NON-METALLIC CABLE FOR RESIDENCE BUILDING. PROVIDE CPUD PRIMARY AND SECONDARY CABLE PER THE UTILITIES REQUIREMENTS.

20. WIRING AND DEVICES – PROVIDE WIRING DEVICES AND PLATES OR BLANK PLATES ONLY FOR ALL OUTLET BOXES SHOWN. WIRING DEVICES SHALL BE SPECIFICATION GRADE, WITH SPECIAL DEVICES AS NOTED ON THE DRAWINGS. SHOULD THE DRAWINGS INDICATE A DEVICE OTHER THAN THOSE LISTED HEREIN WITHOUT REFERENCE TO CATALOG NUMBER, SUCH DEVICE SHALL BE OF SAME GRADE AND MANUFACTURE AS SPECIFIED BELOW. FURNISH A MATCHING CAP FOR ALL SPECIAL PURPOSE DEVICES THAT DO NOT HAVE THE COMMON 120 VOLT NEMA 5-15R OR 5-20R CONFIGURATION.
WIRING DEVICES AND PLATES: HUBBELL, LEVITON, PASS & SEYMOUR.
NORMAL POWER DUPLEX: 3-WIRE, 2-POLE GROUNDING, NEMA (5-20R), GRAY NYLON EXPOSED FINISH, BACK AND SIDE WIRED.
WEATHERPROOF: HUBBELL WP26WH COVER MOUNTED VERTICALLY, WITH HINGES UP.
GROUND FAULT INTERRUPTING DUPLEX: NEMA 5-20R, GRAY NYLON EXPOSED FINISH, HUBBELL (GF-5252) SERIES.

21. IDENTIFICATION – CLEARLY AND PROPERLY IDENTIFY THE COMPLETE ELECTRICAL SYSTEM TO INDICATE THE LOADS SERVED OR THE FUNCTION OF EACH ITEM OF EQUIPMENT CONNECTED UNDER THIS WORK.

22. SECONDARY DISTRIBUTION – FURNISH AND INSTALL THE MATERIALS FOR THE COMPLETE SECONDARY SERVICE AND DISTRIBUTION SYSTEM AS SPECIFIED HEREIN AND SHOWN ON THE DRAWINGS.
    A. PROVIDE TRANSFORMERS, PADS, VAULTS, RACEWAY, CABLE, WIRING AND GROUNDING CABLE FOR USE BY THE SERVING UTILITY. COORDINATE PAD SIZE, OPENINGS, TYPE OF CONSTRUCTION, CONDUIT ARRANGEMENT AND GROUNDING REQUIREMENTS WITH THE UTILITY PRIOR TO CONSTRUCTION.

    B. PROVIDE CPUD UTILITY METERING FACILITIES WHERE INDICATED ON THE DRAWINGS, COMPLYING WITH THE ESTABLISHED SERVING UTILITY REQUIREMENTS. PROVIDE QUANTITY AND STYLE OF METER SOCKETS AND ACCESSORIES REQUIRED BY THE UTILITY.

    C. INCLUDE ALL METERING CHARGES OR CONNECTION COSTS CHARGED BY THE SERVING UTILITY IN THE ORIGINAL PROPOSAL. REFER TO COORDINATION OF WORK SECTION OF THESE SPECIFICATIONS.

    D. CUTLER HAMMER, GENERAL ELECTRIC, SIEMENS, SQUARE D.

    E. SERVICE CABINETS: STRONG BOX, MILLBANK, OR APPROVED EQUAL.

    F. BRANCH CIRCUIT PANELS: LOAD COILER TYPE WITH ALUMINUM OR COPPER BUSSING. PANELS SHALL BE FITTED WITH FLUSH LIFT LATCHES AND LOCKS KEYED ALIKE. DELIVER ALL PANEL KEYS TO THE OWNER AT COMPLETION OF THE PROJECT.

    G. MAIN CIRCUIT BREAKERS: EQUIP PANELS INDICATED WITH MAIN CIRCUIT BREAKERS SIZED AS SCHEDULED AND MOUNTED BEHIND DOOR AT TOP OF PANEL. BACK FEEDING OF BRANCH CIRCUIT BREAKERS IS NOT ACCEPTABLE.

    H. BRANCH CIRCUIT BREAKERS: MOLDED CASE, THERMAL MAGNETIC TYPE. BREAKERS SHALL HAVE SHORT CIRCUIT CAPACITY RATING TO WITHSTAND THE MAXIMUM SHORT CIRCUIT DUTY WHICH CAN BE EXPECTED AT THE BREAKER LOCATION IN THE ELECTRICAL SYSTEM. BREAKERS MOUNTED IN BRANCH PANELBOARDS SHALL BE OF THE BOLT-IN TYPE. CIRCUIT BREAKERS USED FOR SWITCHING DUTY SHALL BE UL LISTED FOR THAT PURPOSE AND MARKED ?SWD?. MINIMUM SHORT CIRCUIT RATING FOR ANY CIRCUIT BREAKER: 10,000 A.I.C. FOR 120V AND 208V BREAKERS, 14,000 A.I.C. FOR 277V AND 480V BREAKERS.

    I. WIRING GUTTERS: A MINIMUM OF 4 INCHES WIDE EXCEPT WHERE FEEDER CONDUCTORS ENTER WHERE A MINIMUM OF 6 INCHES CLEAR SHALL BE PROVIDED. FEEDER CONDUCTORS TO ENTER DIRECTLY IN LINE WITH LUG TERMINALS WHEREVER PRACTICABLE. PROVIDE SEPARATE FEEDER STUDS FOR EACH FEEDER CONDUCTOR COMPRESSION LUG.

    J. CABINETS: FLUSH DOORS WITH CONCEALED HINGES AND MOUNTING CLAMPS EQUAL TO SQUARE D MONO FLAT, OR ITE DECOR TRIM. SURFACE PANELS SHALL HAVE METAL FACE TRIMS WITH NO SHARP EDGES OR CORNERS. FINISH SURFACE PANEL TUBS TO MATCH FACE TRIM. EQUIP WITH A SHEET METAL SKIRT TO FLOOR, FINISHED TO MATCH PANEL TO PREVENT DIRT ACCUMULATION WHERE CONDUITS PENETRATE FLOOR. ACCESS PANEL ON SKIRT MAY BE SCREW TYPE FOR ACCESS TO INTERIOR.

    K. GROUND BUS: PROVIDE A GROUNDING BUS WITH TERMINATION CAPACITY FOR THE GROUNDING CONDUCTOR SIZED FOR THE BRANCH CIRCUIT EQUIPMENT GROUNDING CONDUCTORS IN ISOLATED GROUND 208Y/120V PANELS IDENTIFIED BY SUFFIX IG. GROUNDING BUS SHALL BE (INSULATED FROM) (BONDED TO) THE PANEL CABINET.

    L. CONCRETE PAD MOUNTED SERVICE CABINET AS SHOWN ON THE DRAWINGS CONTAINING ALL EQUIPMENT SHOWN ON THE DRAWINGS AND AS SPECIFIED HEREIN.

    M. SERVICE CABINET SHALL BE SECTIONALIZED, FREE STANDING, METAL ENCLOSED UNIT. CABINETS SHALL BE RAIN-TIGHT AND SHALL BE FABRICATED FROM 12-GAUGE, STEEL WITH A POWERED COATED FINISH. ALL SEAMS SHALL BE CONTINUOUSLY WELDED AND GROUND SMOOTH, NO HOLES OR KNOCK-OUTS. HINGES SHALL BE STAINLESS STEEL PIANO TYPE. ENCLOSURES SHALL HAVE DRIP SHIELDS AND SHALL BE CLOSED WITH A TWO-POINT CATCH AND VAULT-TYPE HANDLE WITH PADLOCK PROVISION. PROVIDE A 500W HEATER WITH INTEGRAL THERMOSTAT AND A GFCI DUPLEX RECEPTACLE. PROVIDE PADLOCK WITH 2 KEYS. VENTILATION OPENINGS SHALL BE PROVIDED SUCH THAT A QUARTER INCH THICK ROD SHALL NOT PENETRATE ANY OPENING AND COME IN CONTACT WITH ANY INTERNAL EQUIPMENT OR CONNECTION. COVERS SHALL BE PROVIDED SO THAT ALL EQUIPMENT IS SERVICEABLE AND REMOVABLE FROM THE FRONT OF THE CABINET.

    N. CONSTRUCTION SHALL BE OPEN-BOTTOM WITH A BOTTOM FRAME THAT CAN BE BOLTED TO THE CONCRETE AT A MINIMUM OF FOUR CORNER POINTS. ALL CONDUITS SHALL ENTER FROM THE BOTTOM OF THE CABINET. ALL WORKING HARDWARE SHALL BE STAINLESS STEEL. ALL METAL AND NON-HARDWARE METAL PARTS SHALL HAVE ALL SLAG, BURRS, AND ROUGH SPOTS CLEANED AND GROUND SMOOTH.

    O. SERVICE PEDESTAL SHALL BE DELIVERED TO THE SITE COMPLETE WITH ALL EQUIPMENT INSTALLED AND WIRED FOR CORRECT OPERATION. ARRANGEMENT OF EQUIPMENT AND WIRING SHALL BE IN CONFORMANCE WITH THE DRAWINGS. ALL WIRING SHALL BE NEATLY ORGANIZED THROUGH THE USE OF WIRING HARNESSES. CONDUCTORS SHALL BE TAGGED FOR IDENTIFICATION AT EACH END. PROVIDE WIRING BEHIND AN INTERNAL HINGED DOOR, ON WHICH EQUIPMENT SHALL BE MOUNTED TO THE FRONT SIDE. NO CONNECTIONS SHALL BE EXPOSED IN FRONT OF THE INTERNAL HINGED DOOR. PROVIDE CONDUCTOR CONNECTION BLOCKS TO BE ABLE TO CONNECT THE DIFFERENT SIZE CONDUCTORS AS SHOWN ON THE DRAWINGS. ADEQUATE SPACE SHALL BE PROVIDED FOR ALL CONTRACTOR WIRING. PEDESTAL SHALL BE LISTED BY UNDERWRITERS' LABORATORIES AND SHALL BEAR A U.L. LABEL AS SUITABLE FOR USE AS SERVICE EQUIPMENT.

    P. FINISH – ENCLOSURE SHALL HAVE A POWDER COATED PAINT FINISH.

    Q. THE COMPLETED ASSEMBLY SHALL BE TESTED AT THE FACTORY FOR OPERATIONAL COMPLIANCE PRIOR TO SHIPMENT TO THE SITE. PROVIDE WRITTEN CERTIFICATION TO THE ENGINEER PRIOR TO SHIPMENT.

    R. SERVICE CABINET SHALL BE EQUIPPED WITH TWO 750 WATT HEATERS AND THERMOSTATS.

23. GROUNDING – PROVIDE COMPLETE GROUND SYSTEMS AS SPECIFIED HEREIN AND SHOWN ON THE DRAWINGS. INCLUDE CONDUIT SYSTEM, TRANSFORMER HOUSINGS, SWITCHBOARD AND SERVICE CABINET FRAME AND NEUTRAL BUS, MOTORS, LIGHT POLES AND MISCELLANEOUS GROUNDS REQUIRED. PROVIDE 600 VOLT INSULATED MAIN BONDING JUMPER AS REQUIRED BY UTILITY COMPANY CONNECTED BETWEEN GROUND BUS IN SERVICE EQUIPMENT AND GROUND TERMINATION POINT OR SERVICE GROUND IN TRANSFORMER AS DIRECTED BY THE UTILITY. BARE OR GREEN INSULATED COPPER FOR INTERIOR SYSTEMS. BARE COPPER FOR UNDERGROUND OR EXTERIOR SYSTEMS. COPPER CLAD STEEL, 5/8"X10'-0" LONG GROUND RODS. WHERE GROUND WELLS ARE INDICATED, PROVIDE A 12-INCH DEEP, 8-INCH DIAMETER PRECAST CONCRETE WELL WITH FLUSH LID FOR ACCESSIBILITY AND INSPECTION OF WELDED CONNECTIONS, RCP VAULTS NO. 12R12A WITH 12R12-T COVER.

VANCOUVER-CLARK PARKS & Recreation

KINGS POND NEIGHBORHOOD PARK

OWNER: CLARK COUNTY
Vancouver, Washington

CONTACT: JERRY BARNETT, CLARK COUNTY PUBLIC WORKS
Vancouver, Washington (360) 397-6118 EXT.4969

STATE OF WASHINGTON REGISTERED LANDSCAPE ARCHITECT
JEAN K. AKERS
CERTIFICATE NO. 1060

SHEET TITLE
ELECTRICAL NOTES

DATE 1/11/08
SCALE AS NOTED
JOB #
DWG BY: GA
CKD BY: AS

REVISIONS

SHEET NO.
L6-04

I:\Design\PARKS-NEIGHBORHOOD\033823 Kings Pond\00 AutoCAD\06 Construction Drawings\SHEETS\KP L6-04.dwg 4/2/2008 4:10 PM

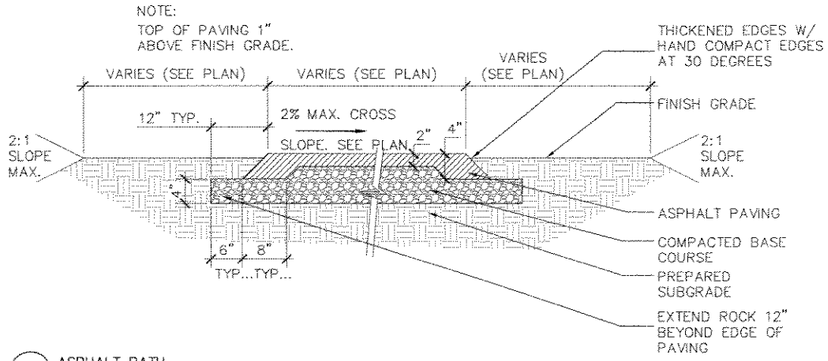

1 ASPHALT PATH
SCALE: 1"=1'-0"

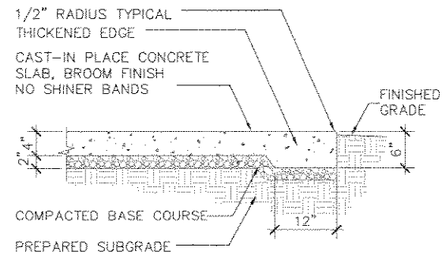

2 4" CONCRETE SURFACE
SCALE: 1"=1'-0"

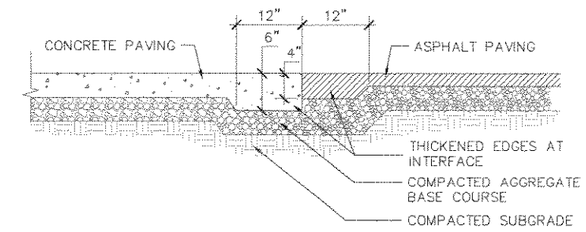

3 CONCRETE PAVING AND ASPHALT PAVING INTERFACE
SCALE: 1"=1'-0"

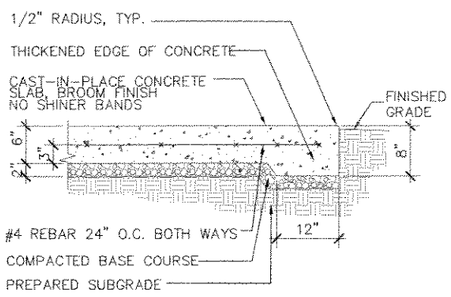

4 6" CONCRETE SURFACE
SCALE: 1"=1'-0"

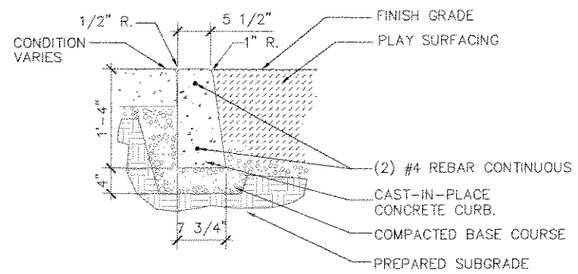

5 CONCRETE CURB AT PLAY AREA
SCALE: 1"=1'-0"

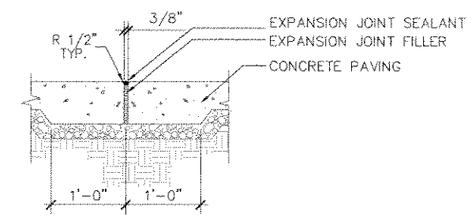

6 EXPANSION JOINT
SCALE: 1"=1'-0"

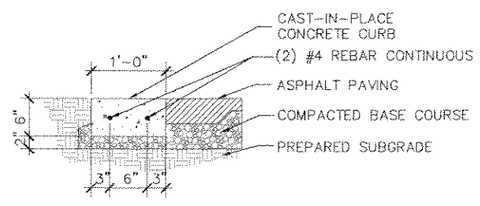

8 CONCRETE CURB AT BASKETBALL COURT
SCALE: 1"=1'-0"

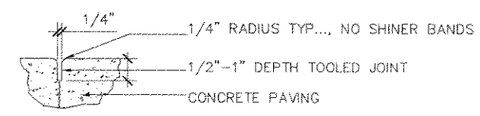

9 CONTROL JOINT
SCALE: 1"=1'-0"

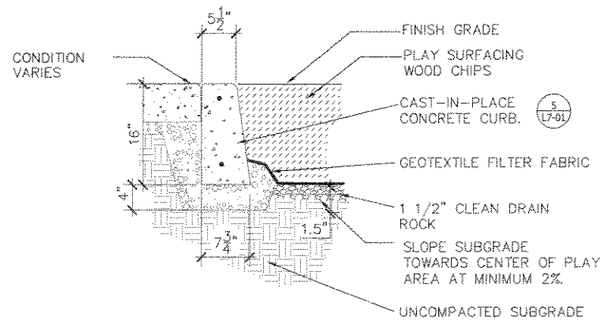

10 PLAY AREA SURFACING
SCALE: 1"=1'-0"

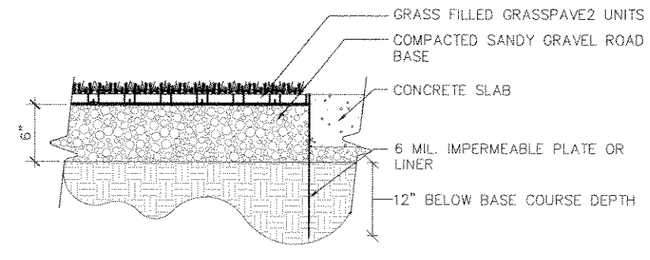

NOTE:
COMPACTED SUBGRADE, 95%%% MODIFIED PROCTOR DENSITY GRASS/PLANT TYPES SHALL BE SPECIFIED BY A LANDSCAPE ARCHITECT OR LANDSCAPE DESIGNER

11 GRASSPAVE2 TURF PAVER
NOT TO SCALE

Invisible Structures, Inc.
GPCONC1.dwg

1600 Jackson St. Suite 310
Golden, Colorado 80401
800-233-1510 OR 303-233-8383
FAX: 800-233-1522 OR 303-233-8282
rev. 08-26-04

VANCOUVER-CLARK PARKS & Recreation

KINGS POND NEIGHBORHOOD PARK

OWNER:
CLARK COUNTY
Vancouver, Washington

CONTACT:
JERRY BARNETT, CLARK COUNTY PUBLIC WORKS
Vancouver, Washington (360) 397-6118 EXT.4969

STATE OF WASHINGTON REGISTERED LANDSCAPE ARCHITECT
JEAN K. AKERS
CERTIFICATE NO. 1060

SHEET TITLE
SURFACING DETAILS

DATE 1/11/08
SCALE AS NOTED
JOB #
DWG BY: GA
CKD BY: AS
REVISIONS
SHEET NO.
L7.01

4/2/2008 4:10 PM
\Design\PARKS-NEIGHBORHOOD\033823 Kings Pond\00 AutoCAD\06 Construction Drawings\SHEETS\KP L7-01.dwg

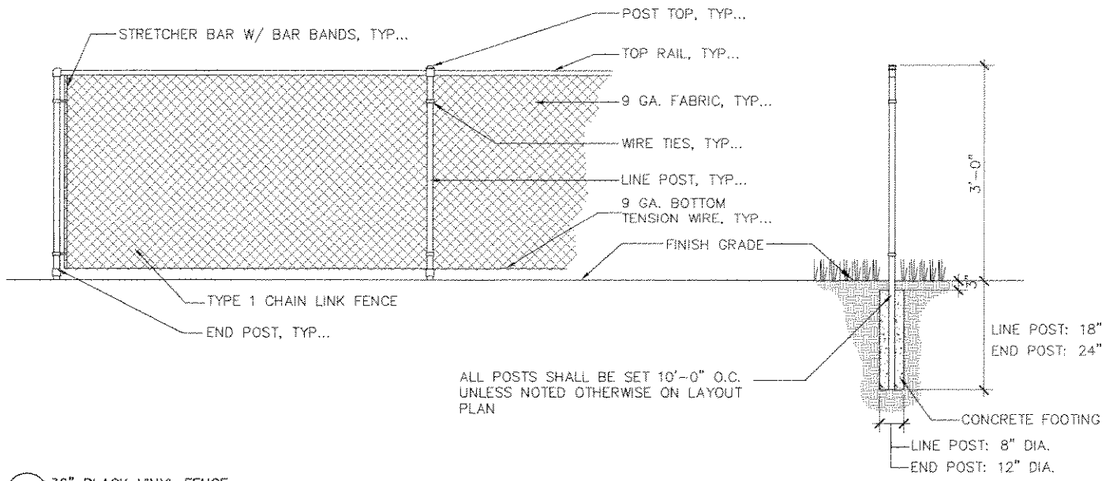

1 36" BLACK VINYL FENCE
SCALE: NTS

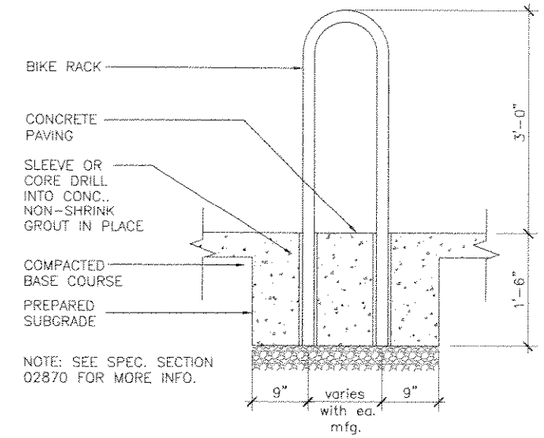

2 BIKE RACK- COLUMBIA CASCADE CO. 2170-3-C
SCALE: 1"=1'-0"

INSTALLATION SEQUENCE
1. DIG FOOTING HOLE AND SET POST FOOTING SLEEVE PLUMB AND SQUARE IN CONCRETE.
2. INSERT REMOVABLE BOLLARD INSERT INTO BOLLARD.
3. TIGHTEN HEX SOCKET SET SCREWS.
4. SET THE BOLLARD AND REMOVABLE BOLLARD INSERT INTO THE POST FOOTING SLEEVE.

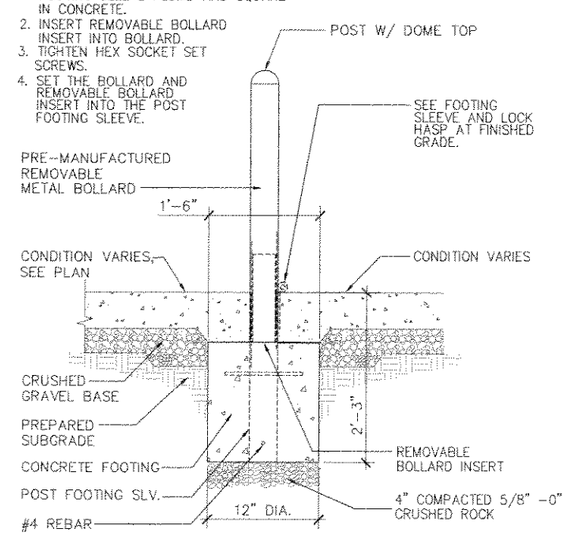

MANUFACTURER: COLUMBIA CASCADE COMPANY
(503) 223-1157

3 REMOVABLE BOLLARD IN CONCRETE SLAB
SCALE: 1"=1'-0"

VANCOUVER-CLARK PARKS & Recreation

KINGS POND NEIGHBORHOOD PARK

OWNER:
CLARK COUNTY
Vancouver, Washington

CONTACT:
JERRY BARNETT, CLARK COUNTY PUBLIC WORKS
Vancouver, Washington (360) 397-6118 EXT.4969

STATE OF WASHINGTON REGISTERED LANDSCAPE ARCHITECT
JEAN K. AKERS
CERTIFICATE NO. 1060

SHEET TITLE
SITE FEATURES DETAILS

DATE 1/11/08
SCALE AS NOTED
JOB #
DWG BY: GA
CKD BY: AS

REVISIONS

SHEET NO.
L7-02

I:\Design\PARKS-NEIGHBORHOOD\033823 Kings Pond\00 AutoCAD\06 Construction Drawings\SHEETS\KP L7-02.dwg 4/2/2008 4:11 PM

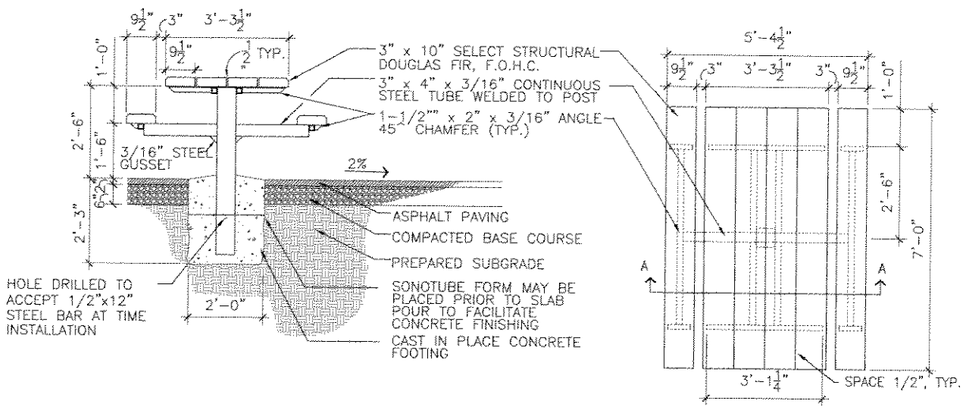

SECTION A – A'

PLAN VIEW

1 PICNIC TABLE TYPE 1
SCALE: 1/2"=1'-0"

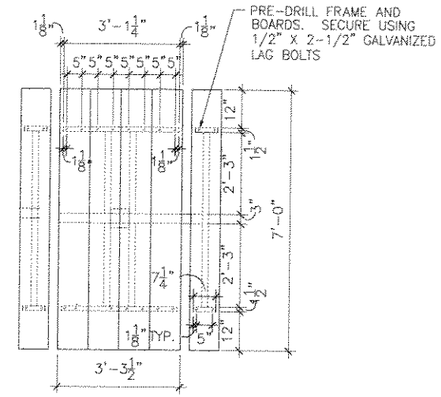

PICNIC TABLE BOLTING PLAN

NOTES:
1. GRIND & SMOOTH ALL SHARP EDGES OF METAL. WELD ALL STEEL CONNECTIONS USING 7/16" THROAT FILLET WELDS.
2. BENCH & TABLE TOP TO BE 3" x 10" SELECT STRUCTURAL DOUGLAS FIR, F.O.H.C., ALL EDGES EASED (1" RADIUS).
4. SECURE DOUG FIR BOARDS TO FRAME USING 1/2" X 2-1/2" GALVANIZED LAG BOLTS.
5. ALL WOOD BOARDS TO BE SEALED WITH OLYMPIC PRO COAT WATER REPELLENT ALKYD OIL STAIN. SOLID COLOR KODIAK BROWN. SOLID BASE #55715. OR APPROVED EQUAL
6. ALL STEEL TO BE HOT DIPPED GALVANIZED.
7. CAP ALL OPEN STEEL TUBE ENDS WITH STEEL PLATES, TYPICAL.

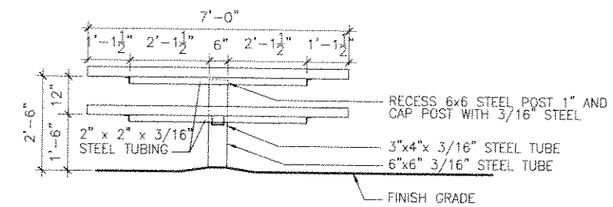

PICNIC TABLE SIDE ELEVATION

INSTALLATION INSTRUCTIONS:
1. EACH SLAT MUST BE POSITIONED SO THAT THE BEST FACE IS EXPOSED WHEN ASSEMBLED. NOTE THAT BACKREST SLATS HAVE TWO VISIBLE FACES. THEREFORE, IF A SLAT HAS A BLEMISH, IT MUST BE INSTALLED ON THE SEAT PORTION OF THE BENCH WITH THE BEST FACE VISIBLE.
2. THE SLATS ARE INSTALLED IN A WIDE FACE–NARROW FACE PATTERN. THEREFORE, EXAMINE AND SORT SLATS PRIOR TO COMMENCING ASSEMBLY TO ENSURE THE BEST FACES ARE USED APPROPRIATELY.
3. FOR MULTIPLE BENCH ORDERS, EXAMINE AND SORT ALL SLATS PRIOR TO COMMENCING ASSEMBLY TO ENSURE THE BEST FACES ARE EXPOSED.
4. MAINTAIN CONSISTENT SPACING WITH THE USE OF SHIMS, (BY OTHERS) IF NECESSARY.

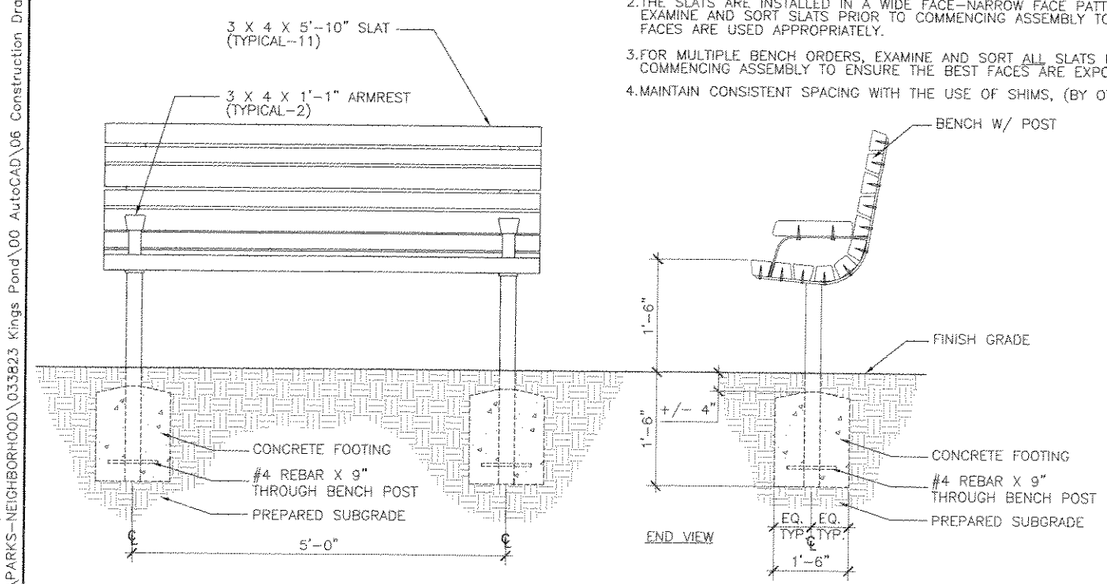

END VIEW

3 BENCH TYPE 1
SCALE: 1"=1'-0"

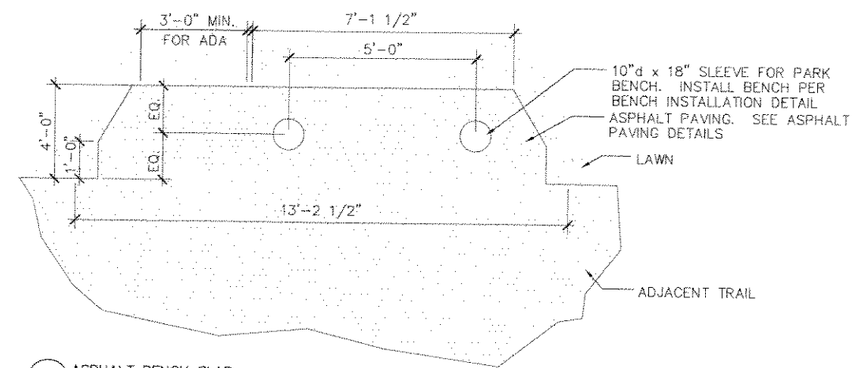

2 ASPHALT BENCH SLAB
SCALE: 1/2"=1'-0"

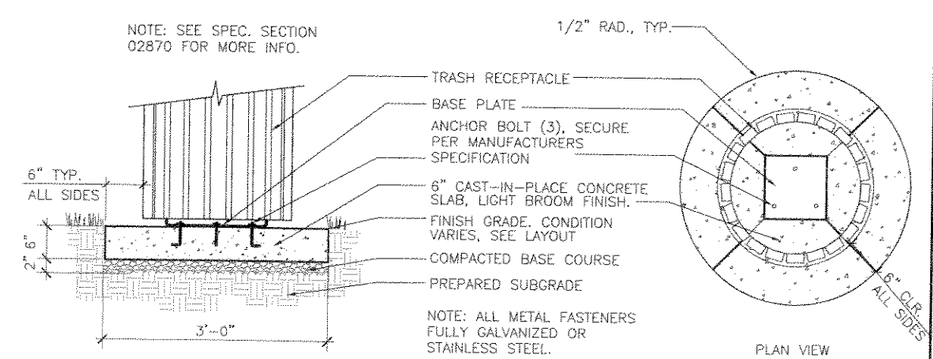

4 TRASH RECEPTACLE– COLUMBIA CASCADE CO. PARKWAY 2084
SCALE: 1"=1'-0"

VANCOUVER-CLARK PARKS & Recreation

KINGS POND NEIGHBORHOOD PARK

OWNER: CLARK COUNTY
Vancouver, Washington

CONTACT: JERRY BARNETT, CLARK COUNTY PUBLIC WORKS
Vancouver, Washington (360) 397-6118 EXT 4969

STATE OF WASHINGTON REGISTERED LANDSCAPE ARCHITECT
JEAN K. AKERS
CERTIFICATE NO. 1666

SHEET TITLE
SITE FURNISHINGS DETAILS

DATE	1/11/08
SCALE	AS NOTED
JOB #	
DWG BY:	GA
CKD BY:	AS
REVISIONS	
SHEET NO.	L7.03

i:\Design\PARKS-NEIGHBORHOOD\033823 Kings Pond\00 AutoCAD\06 Construction Drawings\SHEETS\KP L7-03.dwg 4/2/2008 4:11 PM

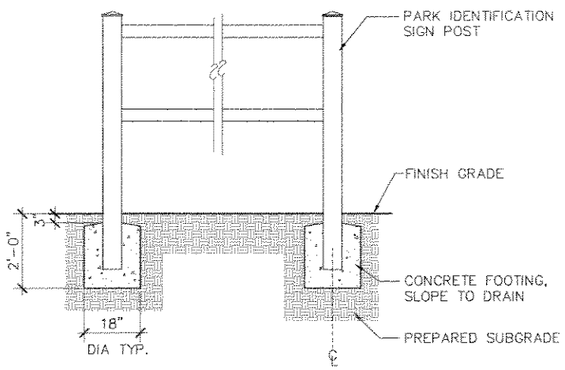

1 PARK ENTRY SIGN
SCALE: 1/2"=1'-0"

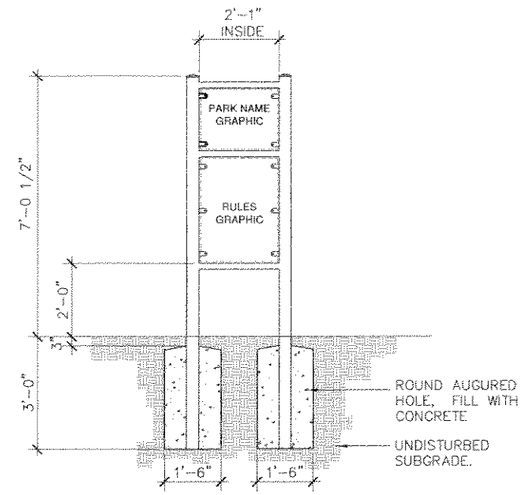

2 PARK RULE SIGN
SCALE: 1/2"=1'-0"

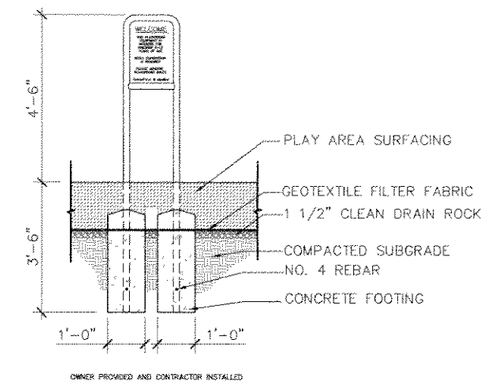

3 PLAY EQUIP. RULE SIGN
SCALE: 1"=1'-0"

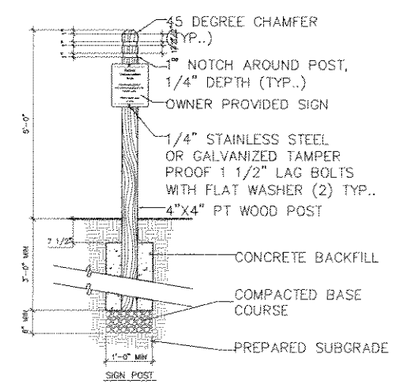

4 HABITAT AREA SIGNS
SCALE: 1/2"=1'-0"

VANCOUVER-CLARK PARKS & Recreation

KINGS POND NEIGHBORHOOD PARK

OWNER:
CLARK COUNTY
Vancouver, Washington

CONTACT:
JERRY BARNETT, CLARK COUNTY PUBLIC WORKS
Vancouver, Washington (360) 397-6118 EXT.4969

STATE OF WASHINGTON REGISTERED LANDSCAPE ARCHITECT
JEAN K. AKERS
CERTIFICATE NO. 1060

SHEET TITLE
SITE FURNISHINGS DETAILS

DATE 1/11/08
SCALE AS NOTED
JOB #
DWG BY: GA
CKD BY: AS

REVISIONS

SHEET NO.
L7-04

I:\Design\PARKS-NEIGHBORHOOD\033823 Kings Pond\00 AutoCAD\06 Construction Drawings\SHEETS\KP L7-04.dwg 4/2/2008 4:11 PM

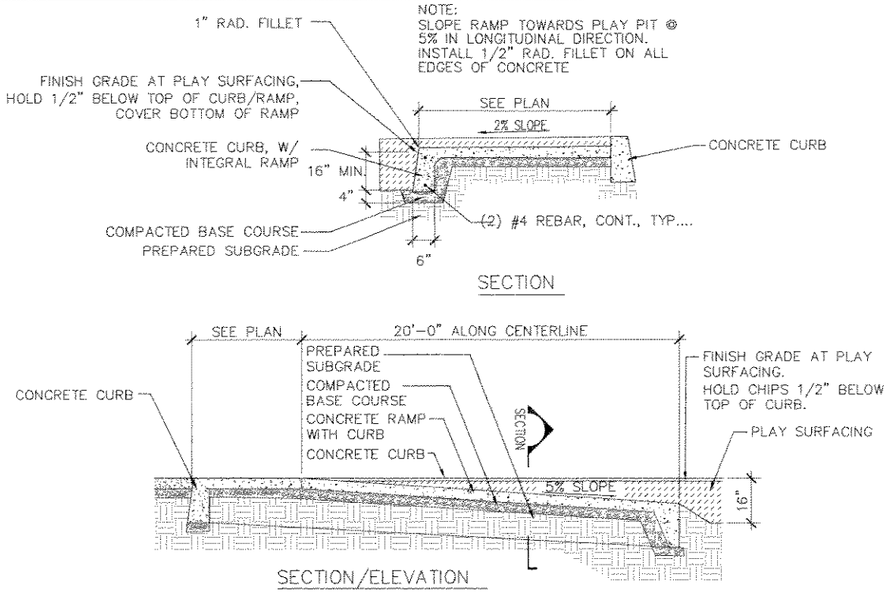

1 CONCRETE RAMP AT PLAY AREA
SCALE: 1"=1'-0"

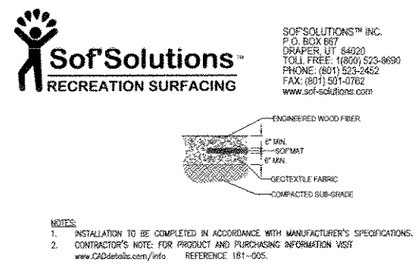

2 SOF'MAT RUBBER MAT
SCALE: NTS

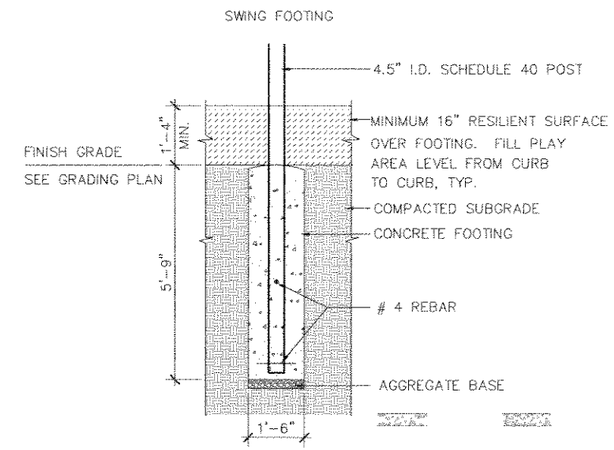

3 COLUMBIA CASCADE PLAY AREA FOOTINGS
SCALE: NTS

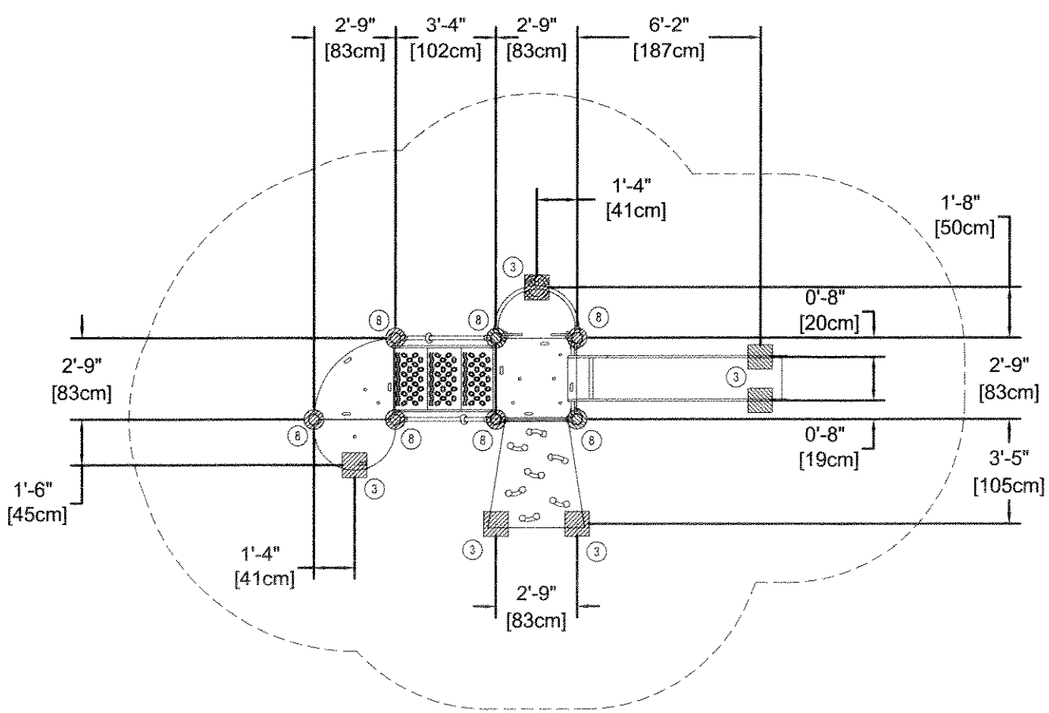

4 KOMPAN CUSTOM ELEMENTS STRUCTURE FOOTING ELE4900666
SCALE: NTS

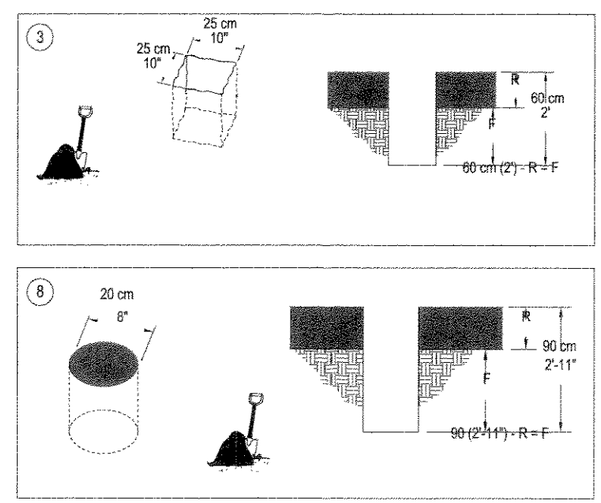

VANCOUVER-CLARK PARKS & Recreation

KINGS POND NEIGHBORHOOD PARK

CONTACT: JERRY BARNETT, CLARK COUNTY PUBLIC WORKS Vancouver, Washington (360) 397-6118 EXT.4969

OWNER: CLARK COUNTY Vancouver, Washington

STATE OF WASHINGTON REGISTERED LANDSCAPE ARCHITECT
JEAN K. AKERS
CERTIFICATE NO. 1060

SHEET TITLE
PLAY AREA ENLARGEMENT PLANS

DATE 1/11/08
SCALE 1"=10'-0"
JOB #
DWG BY: GA
CKD BY: AS

REVISIONS

SHEET NO. L7-05

I:\Design\PARKS-NEIGHBORHOOD\033823 Kings Pond\00 AutoCAD\06 Construction Drawings\SHEETS\KP L7-05.dwg 4/3/2008 10:53 AM

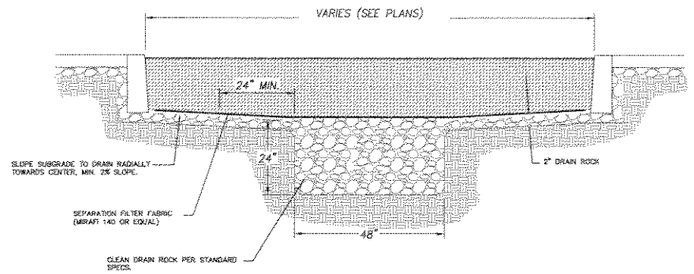

1 PLAY GROUND INFILTRATION TRENCH
SCALE: NTS

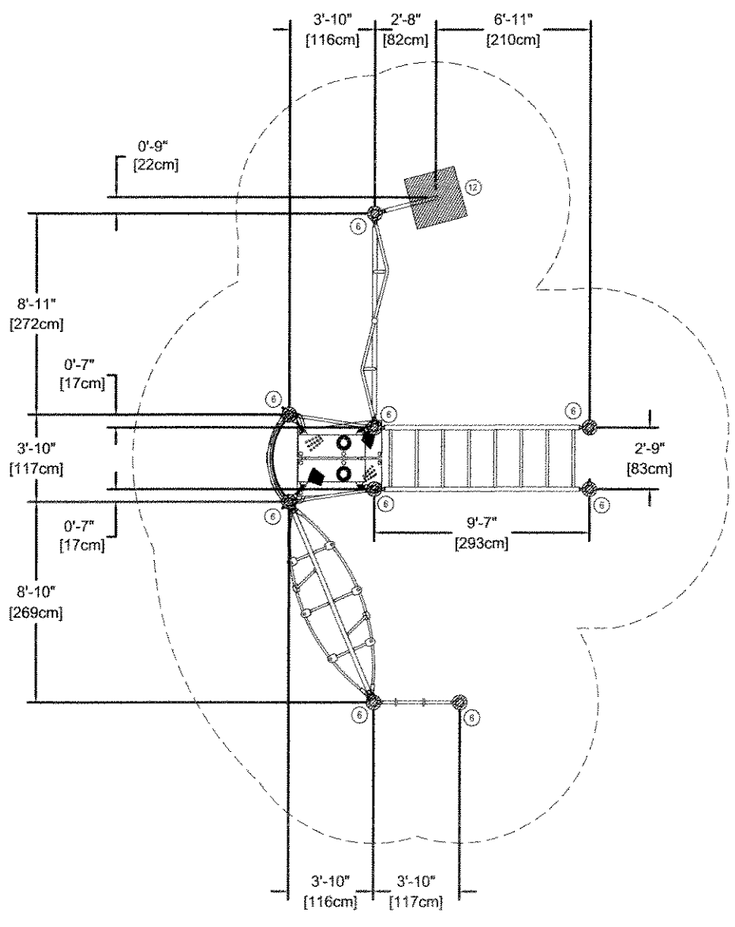

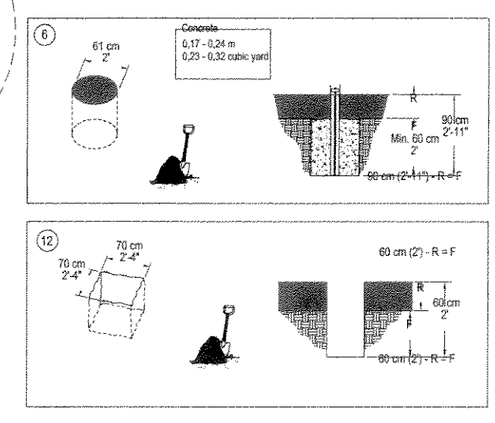

2 KOMPAN CUSTOM ELEMENTS STRUCTURE FOOTING ELE500009
SCALE: NTS

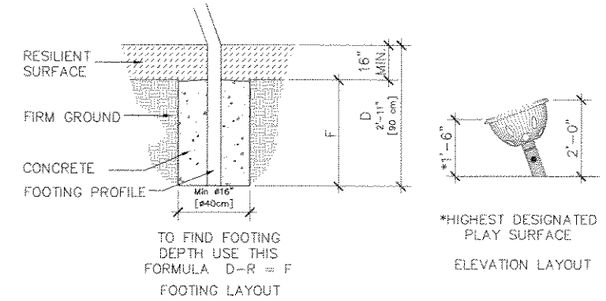

3 KOMPAN SPINNER BOWL FOOTING ELE400024
SCALE: 1/2"=1'-0"

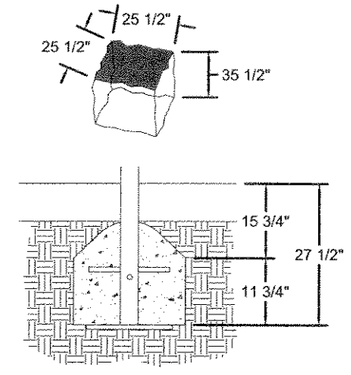

4 KOMPAN JR SPICA FOOTING ELE400058
SCALE: 1/2"=1'-0"

VANCOUVER-CLARK PARKS & Recreation

KINGS POND NEIGHBORHOOD PARK

CONTACT: JERRY BARNETT, CLARK COUNTY PUBLIC WORKS Vancouver, Washington (360) 397-6118 EXT.4969

OWNER: CLARK COUNTY Vancouver, Washington

STATE OF WASHINGTON REGISTERED LANDSCAPE ARCHITECT
JEAN K. AKERS
CERTIFICATE NO. 1060

SHEET TITLE
PLAY AREA ENLARGEMENT PLANS

DATE: 1/11/08
SCALE: 1"=10'-0"
JOB #
DWG BY: GA
CKD BY: AS

REVISIONS

SHEET NO. L7-06

I:\Design\PARKS-NEIGHBORHOOD\033823 Kings Pond\00 AutoCAD\06 Construction Drawings\SHEETS\KP L7-06.dwg 4/3/2008 10:54 AM