CAPITAL IMPROVEMENTS PROGRAM
COUNTY ROAD PROJECT #341322
FEDERAL AID NUMBER BRM-4253(012)
FEDERAL CONTRACT NUMBER TA-2854

KLINELINE BRIDGE #1

HIGHWAY 99 (12+28.95 TO 26+15.04)

BRIDGE REPLACEMENT

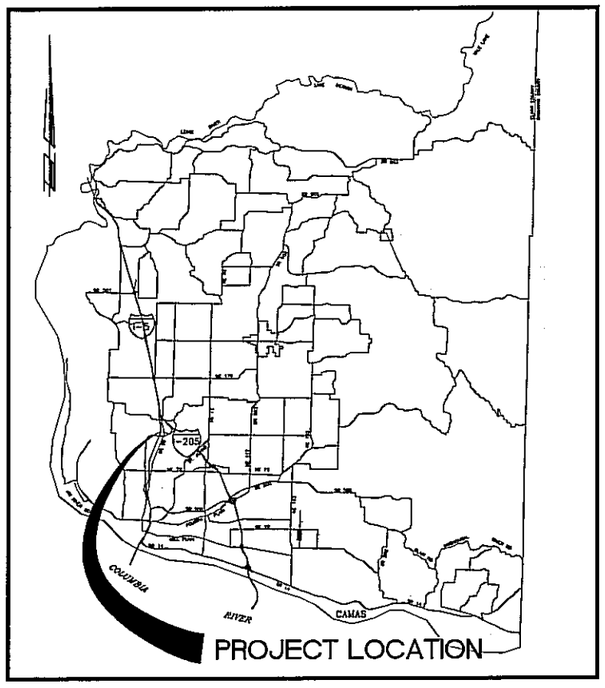

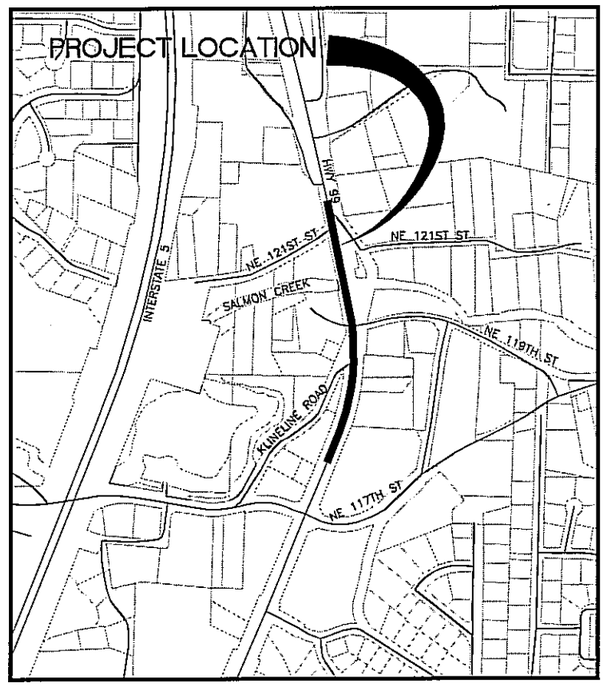

SHEET INDEX

SHEET NUMBER	REFERENCE NUMBER	
1	T1	COVER SHEET AND INDEX
2	VIC1	VICINITY MAP
3	TS01	TYPICAL SECTIONS
4	EC01	EROSION CONTROL PLAN
5	DD01	STORMWATER FACILITY PLAN
6-9	PP01-PP04	HIGHWAY 99 PLAN AND PROFILE
10	PP05	NE 119TH STREET PLAN AND PROFILE
11	PP06	NE 122ND STREET PLAN AND PROFILE
12-14	UD1-UD3	UTILITY PLAN AND PROFILE
15	WD1	WALL PLAN & PROFILE
16	SG01	HIGHWAY 99 SIGNAL MODIFICATION
17-18	SS01-SS02	SIGNING AND STRIPING PLAN
19-21	D01-D03	STANDARD DRAINAGE DETAILS
22-25	D04-D07	STANDARD EROSION CONTROL DETAILS
26-29	D08-D11	STANDARD TRANSPORTATION DETAILS
		STRUCTURE PLANS
32	B1	LAYOUT PLAN
33	B2	BRIDGE CONSTRUCTION STAGING 1 OF 2
34	B3	BRIDGE CONSTRUCTION STAGING 2 OF 2
35	B4	FOUNDATION LAYOUT
36	B5	SHAFT DETAILS
37	B6	ABUTMENT 1 LAYOUT
38	B7	ABUTMENT 2 LAYOUT
39	B8	FRAMING PLAN
40	B9	TYPICAL SECTION
41	B10	PRESTRESSED CONCRETE GIRDER DETAILS 1 OF 2
42	B11	PRESTRESSED CONCRETE GIRDER DETAILS 2 OF 2
43	B12	END DIAPHRAGM ON GIRDER DETAILS
44	B13	PEDESTRIAN BARRIER DETAILS 1 OF 3
46	B15	PEDESTRIAN BARRIER DETAILS 3 OF 3
47	B16	BRIDGE RAILING TYPE BP DETAILS 1 OF 2
48	B17	BRIDGE RAILING TYPE BP DETAILS 2 OF 2
49	B18	APPROACH SLAB AND COMPRESSION SEAL DETAILS
50	B19	BRIDGE REMOVAL
51	B20	FINISH ELEVATION
		STREAM RESTORATION PLANS
54	SR1	SHEET INDEX, GENERAL NOTES, LEGEND
55-56	SR2-SR3	ROUGHENED CHANNEL PLAN AND PROFILE
57	SR4	CROSS SECTIONS
58	SR5	TYPICAL CROSS SECTIONS
59	SR6	GRADE CONTROL STRUCTURE RIVER STA. 11+75
60	SR7	GRADE CONTROL STRUCTURE RIVER STA. 14+30
61	SR8	GRADE CONTROL STRUCTURE RIVER STA. 16+00
62	SR9	GRADE CONTROL STRUCTURE RIVER STA. 18+00
63	SR10	CONSTRUCTED STREAMBED DETAILS
64	SR11	BANK TREATMENT DETAILS
65	SR12	STREAM HABITAT ENHANCEMENT DETAILS
66	SR13	STREAMBED DETAILS
67-68	SR14-SR15	PLANTING PLAN
69	SR16	PLANTING LEGEND
70	SR17	PLANTING DETAILS AND NOTES
71-72	SR18-SR19	STREAM DIVERSION PLAN AND PROFILE
73	SR20	STREAM DIVERSION NOTES AND DETAILS
74	SR21-SR22	EROSION CONTROL PLAN
75	SR23	EROSION CONTROL DETAILS AND NOTES

50% PLANS

COMMISSIONERS:

BETTY SUE MORRIS, Chair
MARC BOLDT, Commissioner
STEVEN J. STUART, Commissioner

proud past, promising future
CLARK COUNTY WASHINGTON

DEPARTMENT OF PUBLIC WORKS

ENGINEERING PROGRAM - DESIGN SECTION

Quality Assurance	Project Manager	Public Works Director/ County Engineer
Heath Henderson, P.E. DATE:	Linda Small DATE:	Peter Capell, P.E. DATE:

KGA KRAMER GEHLEN ASSOCIATES
Consulting Engineers Structural/Civil
400 COLUMBIA ST.
SUITE 240
VANC. WA. 98660
360-693-1621
503-289-2661

DOUGLAS L. SARGENT P.E. STATE OF WASHINGTON 24136 REGISTERED PROFESSIONAL ENGINEER
EXPIRES OCT. 22, 2008

FED AID # BRM-4253 (012)

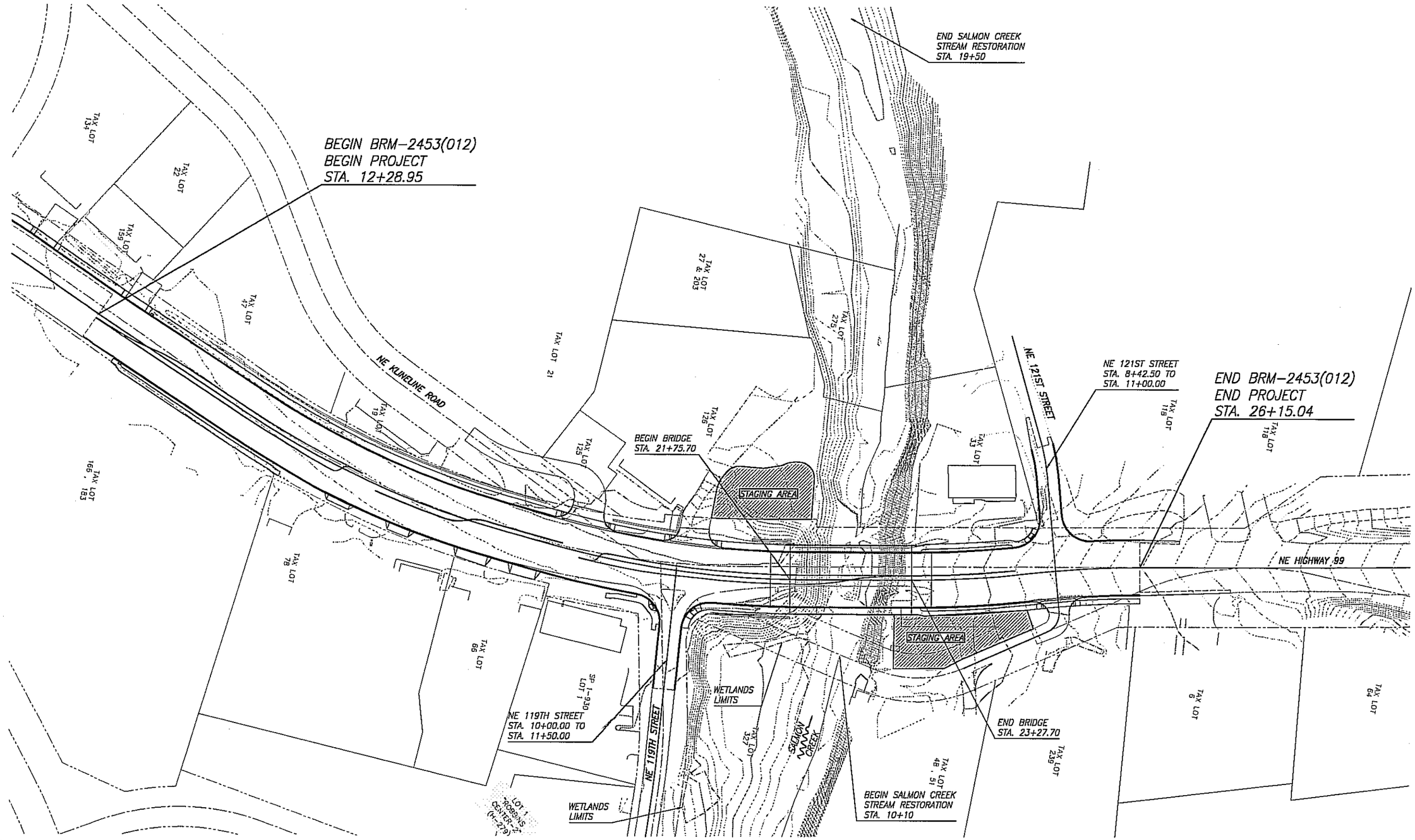

VICINITY MAP
1"=60'-0"

50% SUBMITTAL

DESIGNED	GD, DS
DRAWN	JP, TR
CRP	341.322
HOR.	AS NOTED
VERT.	AS NOTED
DATE	6/12/06
DWG:	VIC1
SHEET	2 OF

CALL 48 HOURS BEFORE YOU DIG
1-800-553-4344
"It's the Law"
NORTHWEST UTILITIES NOTIFICATION CENTER

DOUGLAS L. SARKKINEN P.E.
STATE OF WASHINGTON
21156
REGISTERED PROFESSIONAL ENGINEER
EXPIRES OCT. 02, 2006

ENGINEERING PROGRAM
DESIGN SECTION

KLINELINE BRIDGE
VICINITY MAP

proud past, promising future

CLARK COUNTY
WASHINGTON

Plotted on Jun 12, 2006 - 10:25am, Modified 06-10-06
H:\Project-Files\2003\03159 - Klineline Bridge Replacement\AutoCAD FILES\ VIC1

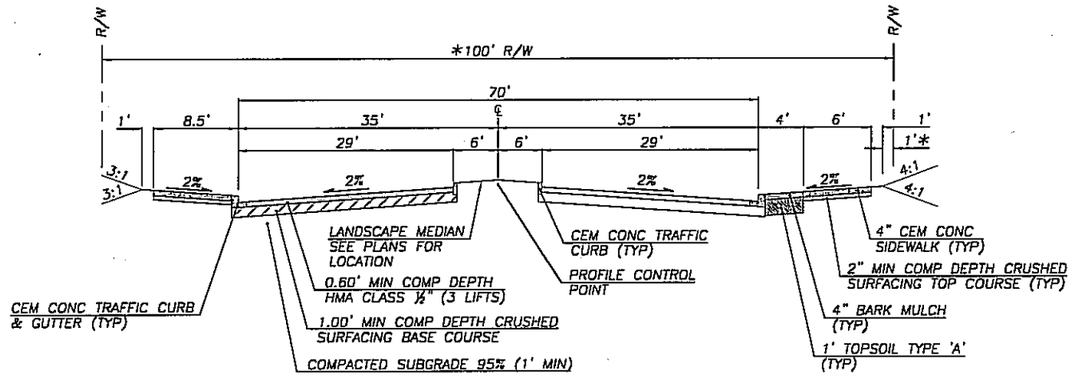

✱ WIDTH VARIES SEE PLAN

STATION 20+80.46 to STATION 21+75.70

HIGHWAY 99

NTS

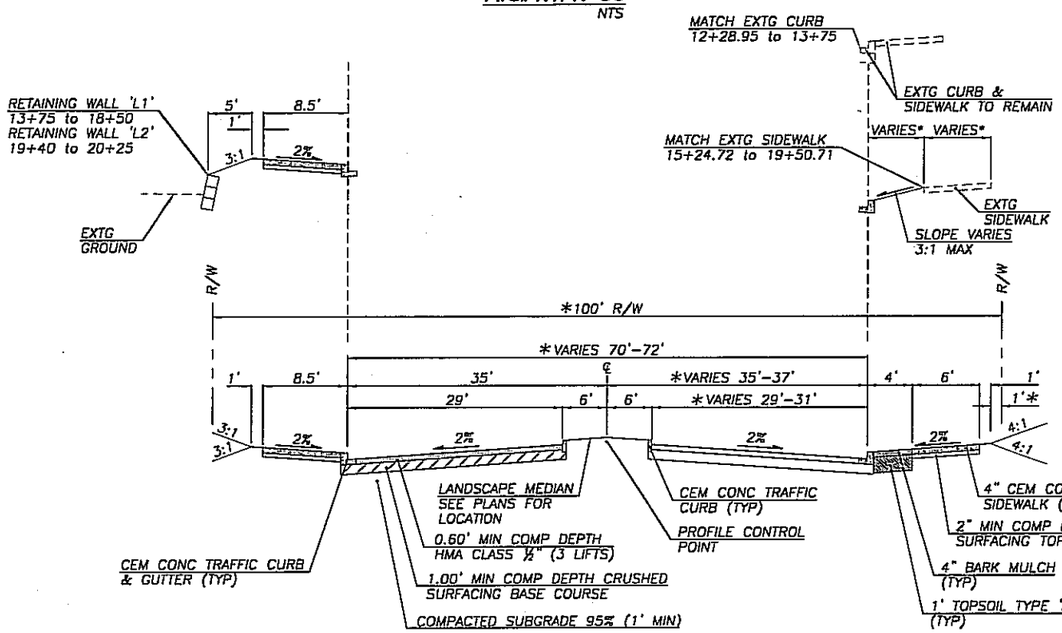

✱ WIDTH VARIES SEE PLAN

STATION 12+28.95 to STATION 20+80.46

HIGHWAY 99

NTS

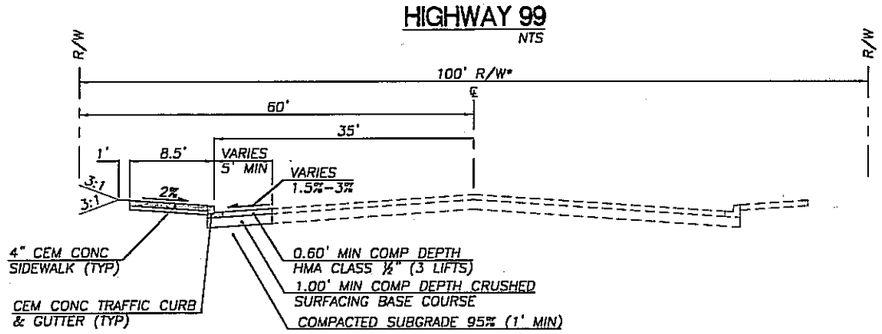

✱ WIDTH VARIES SEE PLAN

STA 10+54.55 to STA 12+28.95

HIGHWAY 99

NTS

NOTE:

SEE BRIDGE PLAN TYPICAL SECTIONS FOR STATION 21+75.70 to STATION 23+27.70

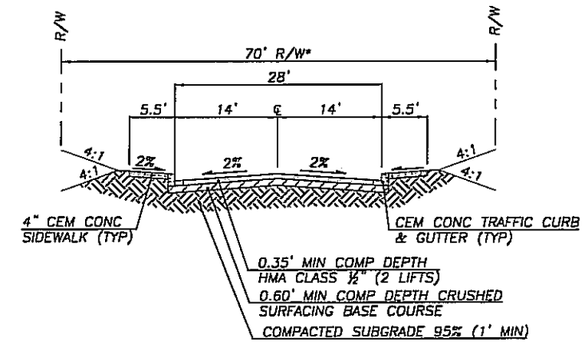

✱ WIDTH VARIES SEE PLAN

NE 122nd STREET

NTS

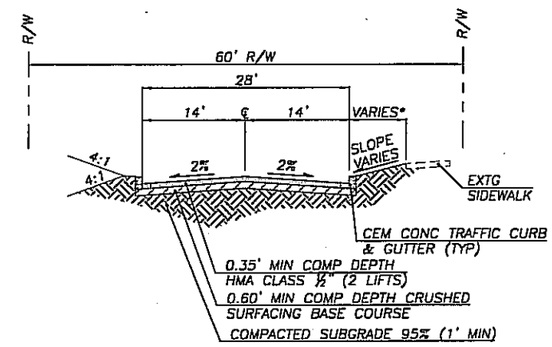

✱ WIDTH VARIES SEE PLAN

NE 119th STREET

NTS

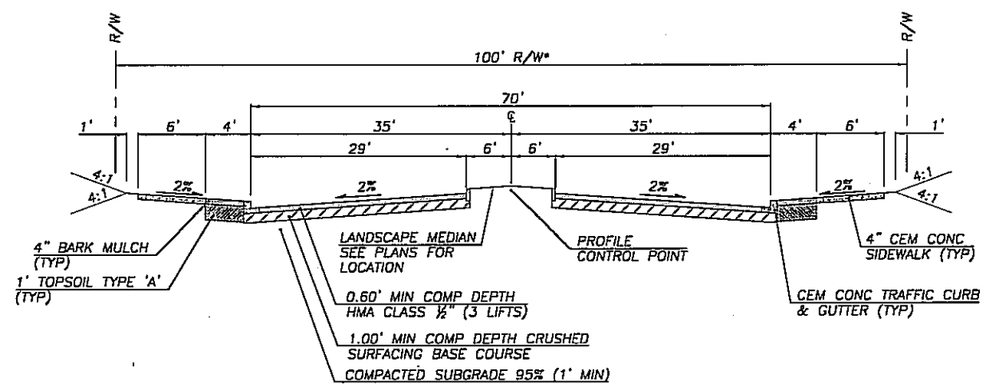

✱ WIDTH VARIES SEE PLAN

STATION 23+27.70 to STATION 26+15

HIGHWAY 99

NTS

50% REVIEW SET

DESIGNED DPS
DRAWN DPS
CRP 341322
HOR. N/A
VERT. N/A
DATE JUN 2006
DWG: TS01
SHEET 3 OF

CALL 48 HOURS BEFORE YOU DIG 1-800-553-4344 "It's the Law" NORTHWEST UTILITIES NOTIFICATION CENTER

STATE OF WASHINGTON — MICHAEL L. KIEVIT — REGISTERED PROFESSIONAL ENGINEER — EXPIRES: AUG. 10, 2006

HOPPER DENNIS JELLISON PLLC
ENGINEERS · PLANNERS
LANDSCAPE ARCHITECTS
314 W. 16th Street (360) 695-3248
Vancouver, WA 98660-2927 (503) 934-4091
Internet: www.hdjengineers.com FAX (360) 695-8767

DESIGN & ENGINEERING DIVISION
DESIGN SECTION

KLINELINE BRIDGE REPLACEMENT
TYPICAL SECTIONS

proud past. promising future

CLARK COUNTY WASHINGTON

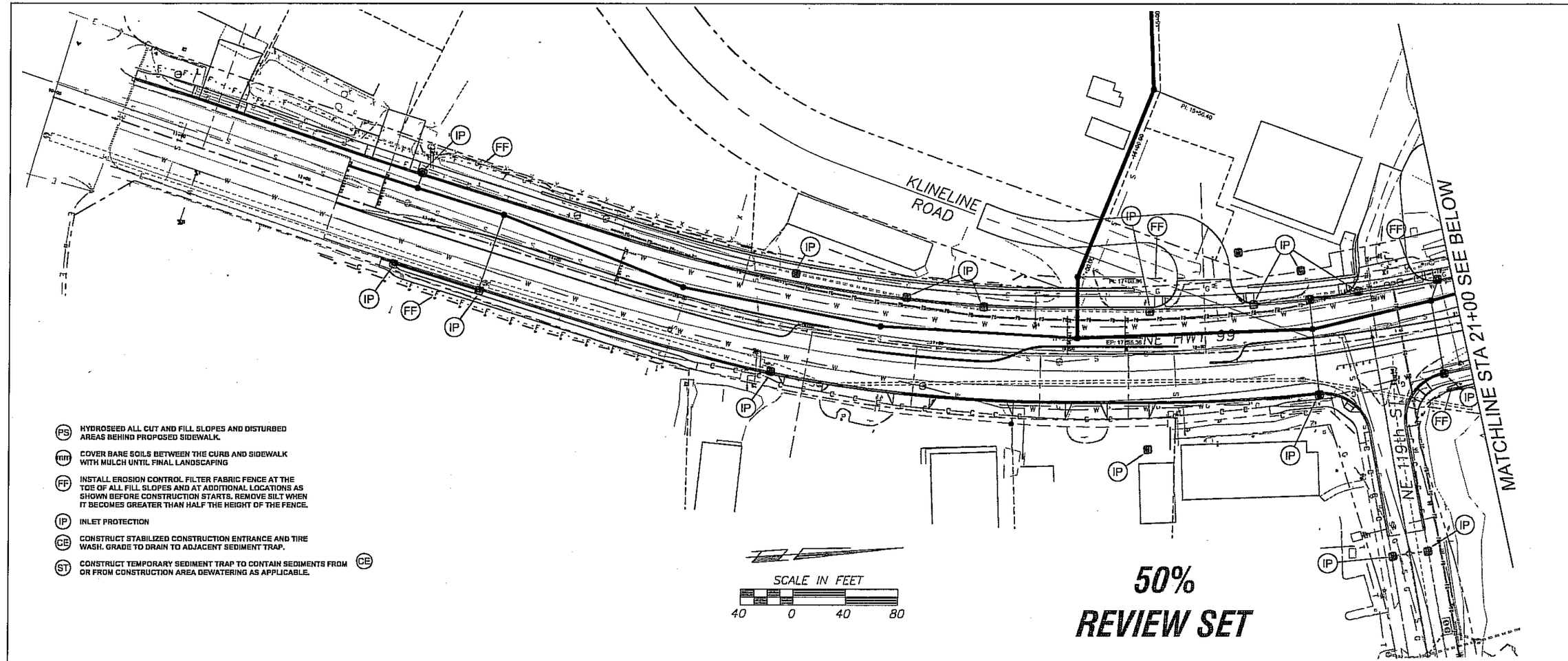

PS HYDROSEED ALL CUT AND FILL SLOPES AND DISTURBED AREAS BEHIND PROPOSED SIDEWALK.

mm COVER BARE SOILS BETWEEN THE CURB AND SIDEWALK WITH MULCH UNTIL FINAL LANDSCAPING

FF INSTALL EROSION CONTROL FILTER FABRIC FENCE AT THE TOE OF ALL FILL SLOPES AND AT ADDITIONAL LOCATIONS AS SHOWN BEFORE CONSTRUCTION STARTS. REMOVE SILT WHEN IT BECOMES GREATER THAN HALF THE HEIGHT OF THE FENCE.

IP INLET PROTECTION

CE CONSTRUCT STABILIZED CONSTRUCTION ENTRANCE AND TIRE WASH. GRADE TO DRAIN TO ADJACENT SEDIMENT TRAP.

ST CONSTRUCT TEMPORARY SEDIMENT TRAP TO CONTAIN SEDIMENTS FROM OR FROM CONSTRUCTION AREA DEWATERING AS APPLICABLE. CE

50%
REVIEW SET

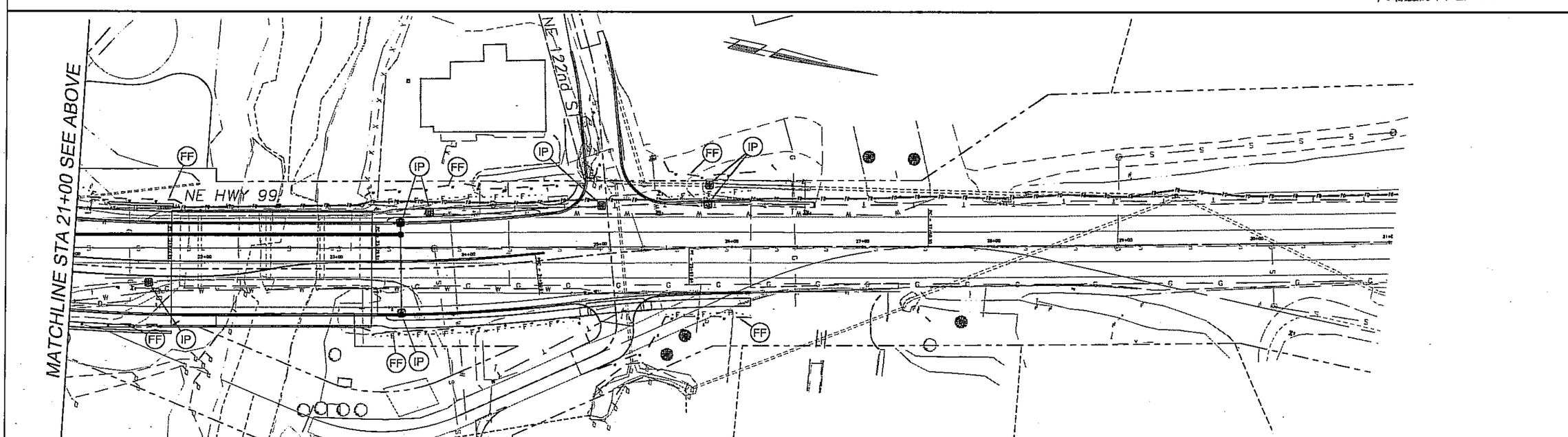

DESIGNED	DPS
DRAWN	DPS
CRP	341322
HOR.	1"=40'
VERT.	N/A
DATE	JUN 2006
DWG.	EC01
SHEET 4	OF

CALL 48 HOURS BEFORE YOU DIG 1-800-553-4344 "It's the Law" NORTHWEST UTILITIES NOTIFICATION CENTER

STATE OF WASHINGTON 41397 REGISTERED PROFESSIONAL ENGINEER
EXPIRES: AUG. 10, 2006

DESIGN & ENGINEERING DIVISION
DESIGN SECTION

KLINELINE BRIDGE REPLACEMENT
EROSION CONTROL PLAN

proud past, promising future
CLARK COUNTY WASHINGTON

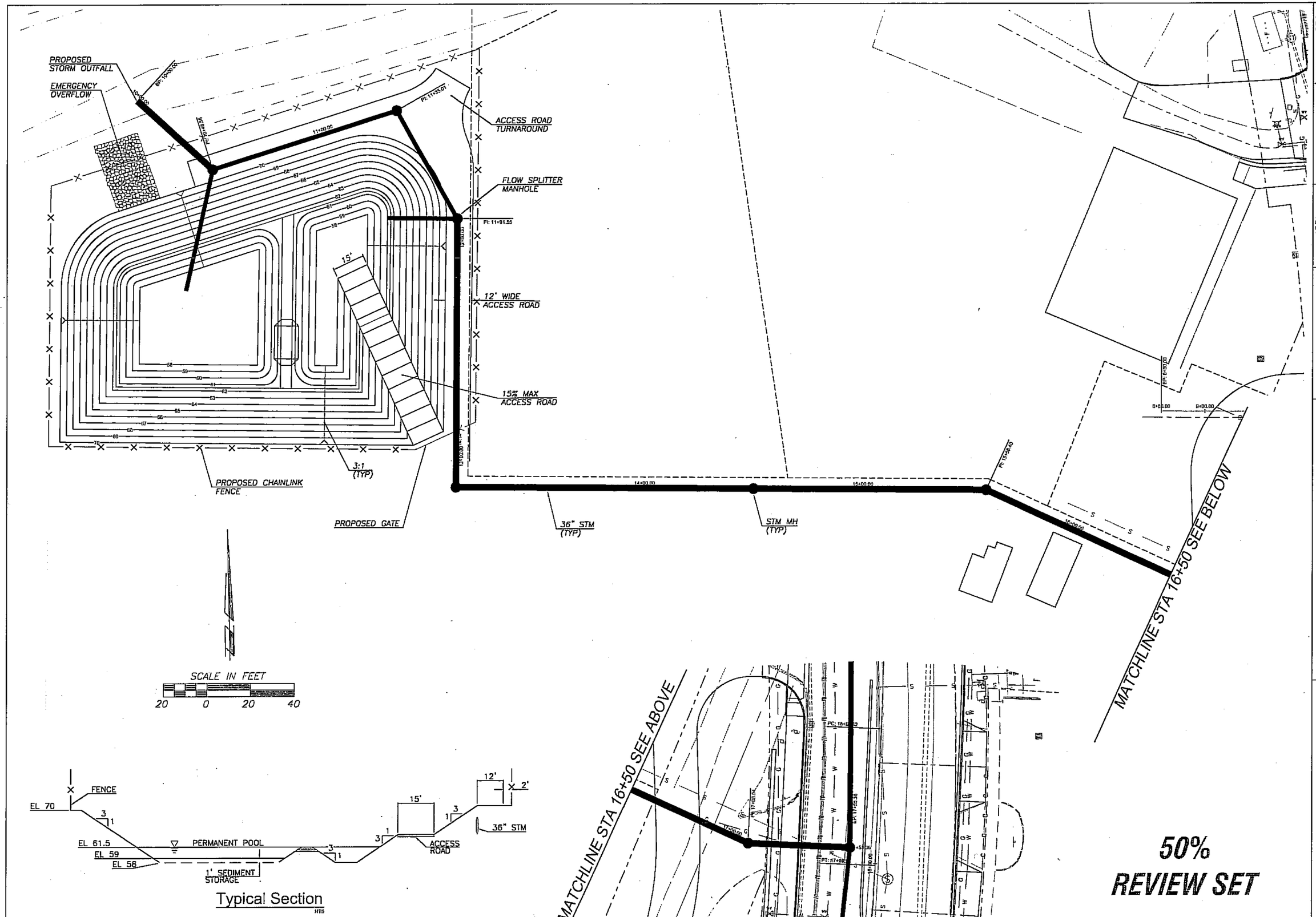
PROPOSED STORM OUTFALL
EMERGENCY OVERFLOW
ACCESS ROAD TURNAROUND
FLOW SPLITTER MANHOLE
12' WIDE ACCESS ROAD
15% MAX ACCESS ROAD
PROPOSED CHAINLINK FENCE
3:1 (TYP)
PROPOSED GATE
36" STM (TYP)
STM MH (TYP)
15'
MATCHLINE STA 16+50 SEE BELOW
MATCHLINE STA 16+50 SEE ABOVE
SCALE IN FEET
20 0 20 40
FENCE
EL 70
EL 61.5
EL 59
EL 58
PERMANENT POOL
1' SEDIMENT STORAGE
ACCESS ROAD
36" STM
12'
2'
15'
Typical Section
50%
REVIEW SET
DESIGNED DPS
DRAWN DPS
CRP 341322
HOR. 1"=20'
VERT. 1"=5'
DATE JUN 2006
DWG: DD01
SHEET 5 OF
CALL 48 HOURS BEFORE YOU DIG
1-800-553-4344
"It's the Law"
NORTHWEST UTILITIES NOTIFICATION CENTER
EXPIRES: AUG. 10, 2008
HOPPER DENNIS JELLISON P.L.L.C.
ENGINEERS · PLANNERS
LANDSCAPE ARCHITECTS
314 W. 15th Street
Vancouver, WA 98660-2937
(360) 695-3488
(503) 731-4232
FAX (360) 695-8707
Internet: www.hdjengineers.com
DESIGN & ENGINEERING DIVISION
DESIGN SECTION
KLINELINE BRIDGE REPLACEMENT
STORMWATER FACILITY PLAN
proud past, promising future
CLARK COUNTY WASHINGTON

10+54.55 (33.59' LT)
SAWCUT & MATCH EXTG CURB & SIDEWALK
BEGIN CEM CONC CURB & GUTTER
BEGIN CEM CONC SIDEWALK
BEGIN 34:1 CURB TAPER

12+60 CONSTRUCT
30' WIDE DRIVEWAY

13+75 (49.50' LT)
BEGIN RETAINING
WALL 'L1'

RETAINING WALL 'L1'
SEE SHEET W01
FOR PROFILE

15+11.55 (6' RT)
BEGIN 34:1 CURB
TAPER

2
R=1150.00'
Δ=17°28'45"
L=350.83'

34:1 JAPER

11+02.35 (35' LT)
END 34:1 CURB
TAPER

R-O-W ℄

N 22° 32' 47" E

R=300'

R=300

NE HWY 99

N 21°06'40" E

NE 117th ST

INTX 10+00 HWY 99
14+21.33 (0.34' RT) NE 117th

11+20 CONSTRUCT
30' WIDE DRIVEWAY

CONST ℄

12+41.03 (5' RT)
CURB PC

13+04.05 (0.54' LT)
CURB PRC

13+61.03 (6' LT)
CURB PT

12+28.95 BEGIN CONSTRUCTION
SAWCUT & MATCH EXTG PAV'T

12+28.95 (5.5' RT)
BEGIN 1' WIDE DUAL
FACED CEM CONC
TRAFFIC CURB

12+43.18
(5' RT) CURB PC BEGIN CEM CONC CURB
(5.5' RT) END 1' WIDE DUAL FACED CEM
CONC TRAFFIC CURB
(6' RT) BEGIN CEM CONC CURB

12+28.95 (34' RT)
MATCH EXTG PAV'T

12+28.95 to 12+75 (RT)
PROTECT EXTG CURB & GUTTER

12+75 (35' RT)
SAWCUT & MATCH EXTG CURB & GUTTER
BEGIN CEM CONC CURB & GUTTER
BEGIN CEM CONC SIDEWALK

1
R=1200.00'
Δ=01°26'07"
L=30.08'

15+11.55 (35' RT)
BEGIN 34:1 CURB
TAPER

15+24.72 (40.55' RT)
END CEM CONC SIDEWALK
MATCH EXTG SIDEWALK

MATCHLINE STA 15+50 SEE SHEET PP02

SCALE IN FEET
20 0 20 40

50%
REVIEW SET

NOTES:
1. RELOCATE/REMOVE BY OTHERS.
2. ADJUST MH RIM/CB GRATE TO FG.
3. ADJUST VALVE COVER/METER BOX TO FG.
4. REMOVE OR ABANDON EXTG CULVERT/DRAINAGE STRUCTURE.
5. SAWCUT &/OR MATCH EXTG CURB &/OR SIDEWALK.
6. SAWCUT EXTG PAVEMENT.
7. REMOVE (RM) OR PROTECT (P) EXTG CURB.
8. REMOVE (RM) OR PROTECT (P) EXTG SIDEWALK.

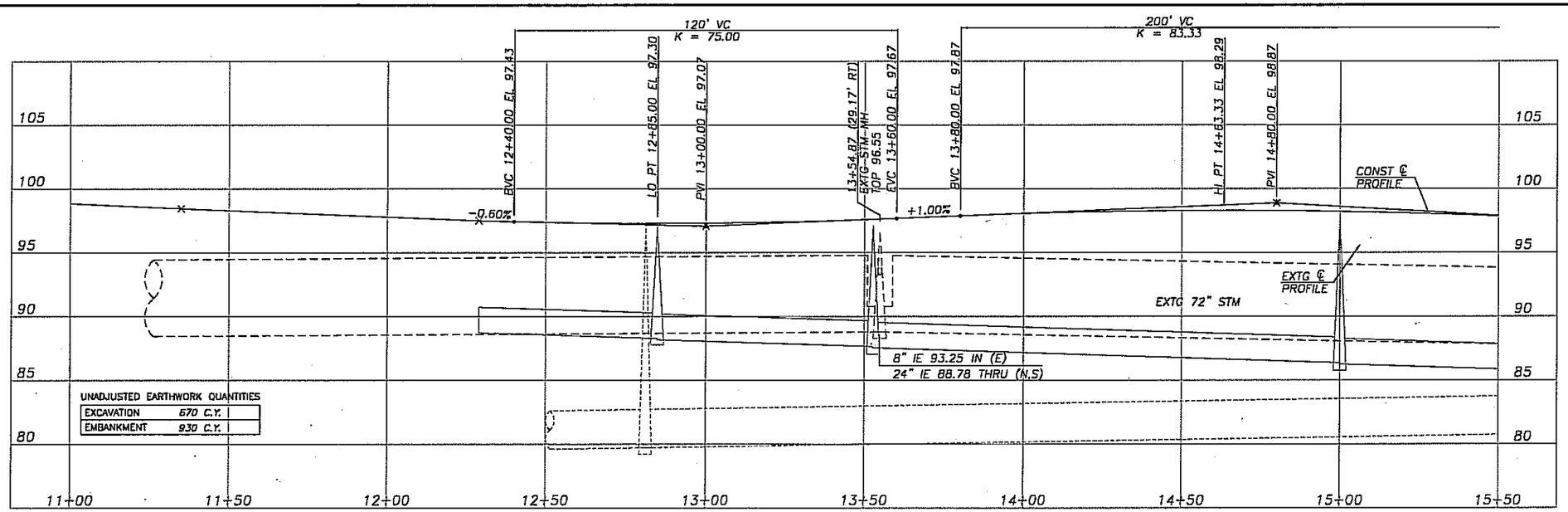

UNADJUSTED EARTHWORK QUANTITIES

EXCAVATION	670 C.Y.
EMBANKMENT	930 C.Y.

DESIGNED DPS
DRAWN DPS
CRP 341322
HOR. 1"=20'
VERT. 1"=5'
DATE JUN 2006
DWG. PP01
SHEET 6 OF

CALL 48 HOURS BEFORE YOU DIG 1-800-553-4344 "It's the Law" NORTHWEST UTILITIES NOTIFICATION CENTER

WILLIAM L. HEM STATE OF WASHINGTON REGISTERED PROFESSIONAL ENGINEER
EXPIRES: AUG. 10, 2006

HOPPER DENNIS JELLISON P.L.L.C.
ENGINEERS · PLANNERS
LANDSCAPE ARCHITECTS
314 W. 13th Street (360) 695-3486
Vancouver, WA 98660-2927 (503) 924-4005
Internet: www.hdjengineers.com FAX (360) 695-8767

DESIGN & ENGINEERING DIVISION
DESIGN SECTION

KLINELINE BRIDGE REPLACEMENT
HIGHWAY 99 PLAN & PROFILE
BOP to Station 15+50

proud past, promising future
CLARK COUNTY WASHINGTON

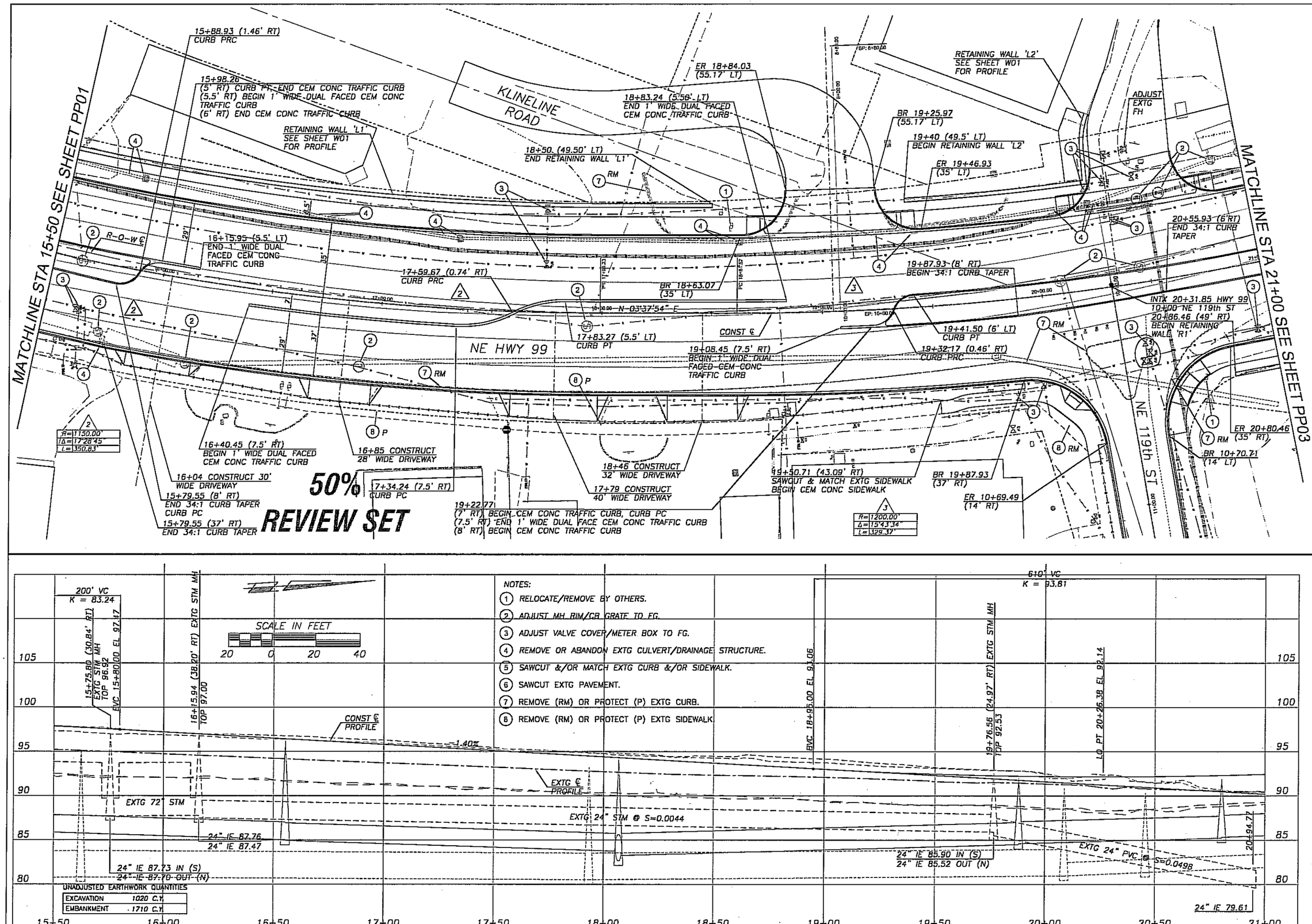

NOTES:

1. RELOCATE/REMOVE BY OTHERS.
2. ADJUST MH RIM/CB GRATE TO FG.
3. ADJUST VALVE COVER/METER BOX TO FG.
4. REMOVE OR ABANDON EXTG CULVERT/DRAINAGE STRUCTURE.
5. SAWCUT &/OR MATCH EXTG CURB &/OR SIDEWALK.
6. SAWCUT EXTG PAVEMENT.
7. REMOVE (RM) OR PROTECT (P) EXTG CURB.
8. REMOVE (RM) OR PROTECT (P) EXTG SIDEWALK.

UNADJUSTED EARTHWORK QUANTITIES

EXCAVATION	1020 C.Y.
EMBANKMENT	1710 C.Y.

DESIGNED DPS
DRAWN DPS
CRP 341322
HOR. 1"=20'
VERT. 1"=5'
DATE JUN 2006
DWG: PP02
SHEET 7 OF

CALL 48 HOURS BEFORE YOU DIG 1-800-553-4344 "It's the Law" NORTHWEST UTILITY NOTIFICATION CENTER

STATE OF WASHINGTON REGISTERED PROFESSIONAL ENGINEER
EXPIRES: AUG. 10, 2008

HOPPER DENNIS JELLISON PLLC
ENGINEERS · PLANNERS
LANDSCAPE ARCHITECTS
314 W. 15th Street Vancouver, WA 98660-2937 (360) 695-3448 (360) 723-4850 Internet: www.hdjengineers.com FAX (360) 695-8767

DESIGN & ENGINEERING DIVISION
DESIGN SECTION

KLINELINE BRIDGE REPLACEMENT
HIGHWAY 99 PLAN & PROFILE
Station 15+50 to Station 21+00

proud past, promising future
CLARK COUNTY WASHINGTON

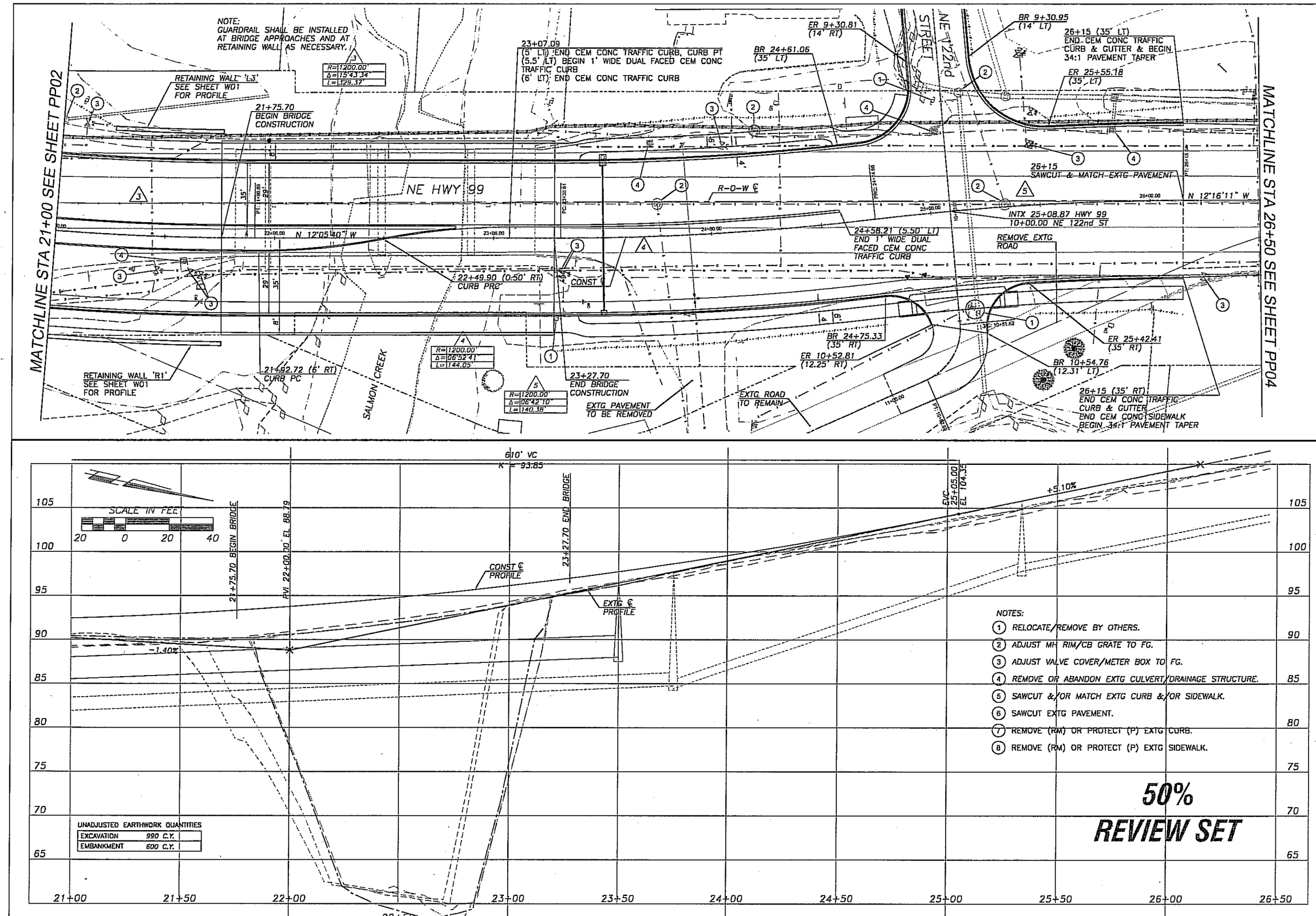

DESIGNED DPS
DRAWN DPS
CRP 341322
HOR. 1"=20'
VERT. 1"=5'
DATE JUN 2006
DWG: PP03
SHEET 8 OF

CALL 48 HOURS BEFORE YOU DIG 1-800-553-4344 "It's the Law" NORTHWEST UTILITIES NOTIFICATION CENTER

WILLIAM J. RIEM STATE OF WASHINGTON REGISTERED PROFESSIONAL ENGINEER
EXPIRES: AUG. 10, 2008

HOPPER DENNIS JELLISON PLLC
ENGINEERS · PLANNERS · LANDSCAPE ARCHITECTS
314 W. 14th Street Vancouver, WA 98660-2937 Internet: www.hdjengineers.com
(360) 695-3446 (503) 224-4083 FAX (360) 695-4767

DESIGN & ENGINEERING DIVISION
DESIGN SECTION

KLINELINE BRIDGE REPLACEMENT
HIGHWAY 99 PLAN & PROFILE
Station 21+00 to Station 26+50

proud past, promising future
CLARK COUNTY WASHINGTON

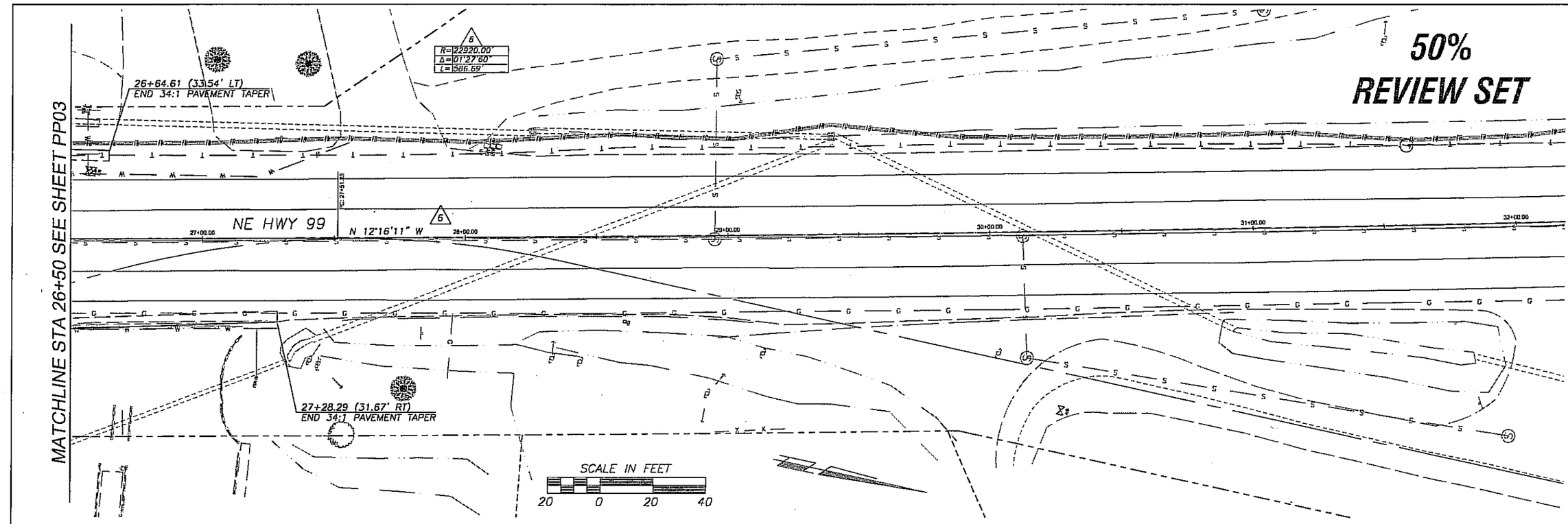

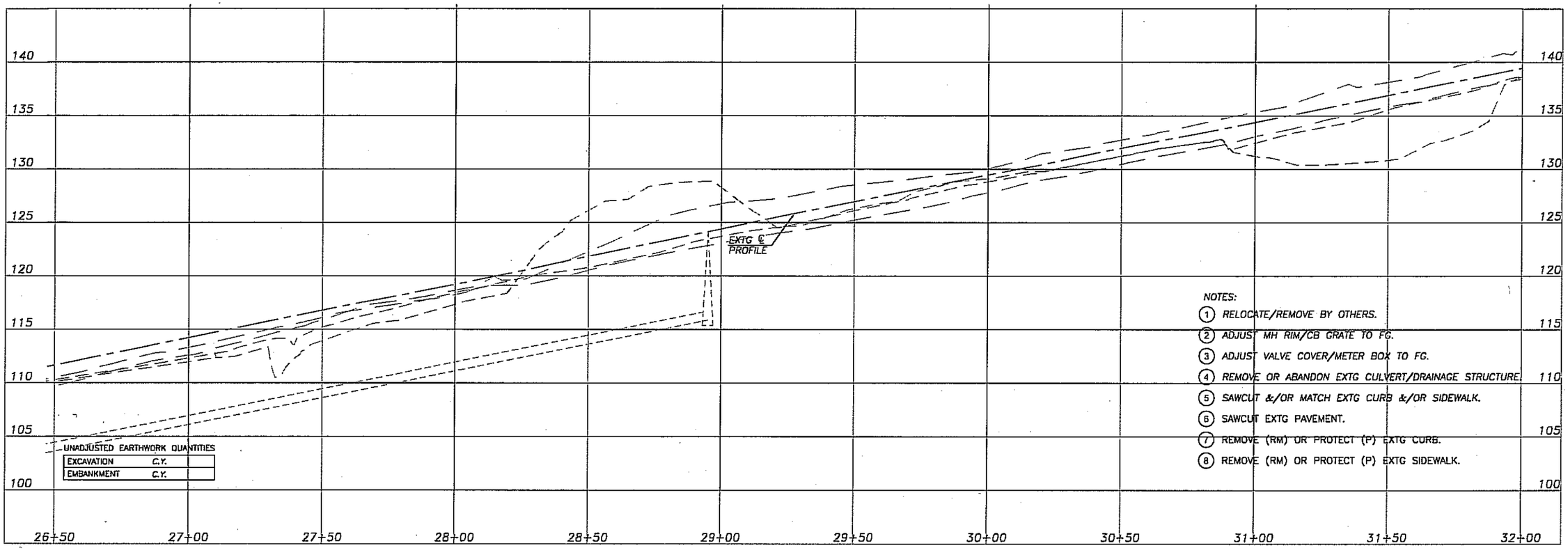

UNADJUSTED EARTHWORK QUANTITIES

EXCAVATION	C.Y.
EMBANKMENT	C.Y.

NOTES:

1. RELOCATE/REMOVE BY OTHERS.
2. ADJUST MH RIM/CB GRATE TO FG.
3. ADJUST VALVE COVER/METER BOX TO FG.
4. REMOVE OR ABANDON EXTG CULVERT/DRAINAGE STRUCTURE.
5. SAWCUT &/OR MATCH EXTG CURB &/OR SIDEWALK.
6. SAWCUT EXTG PAVEMENT.
7. REMOVE (RM) OR PROTECT (P) EXTG CURB.
8. REMOVE (RM) OR PROTECT (P) EXTG SIDEWALK.

DESIGNED	DPS
DRAWN	DPS
CRP.	341322
HOR.	1"=20'
VERT.	1"=5'
DATE	JUN 2006
DWG:	PP04
SHEET 9	OF

CALL 48 HOURS BEFORE YOU DIG 1-800-553-4344 "It's the Law" NORTHWEST UTILITIES NOTIFICATION CENTER

WILLIAM L. NIEMI STATE OF WASHINGTON 22001 REGISTERED PROFESSIONAL ENGINEER

EXPIRES: AUG. 10, 2006

HOPPER DENNIS JELLISON PLLC
ENGINEERS · PLANNERS
LANDSCAPE ARCHITECTS
314 W. 15th Street
Vancouver, WA 98660-2927
(360) 695-3488
(503) 924-4065
Internet: www.hdjengineers.com
FAX (360) 695-8697

DESIGN & ENGINEERING DIVISION
DESIGN SECTION

KLINELINE BRIDGE REPLACEMENT
HIGHWAY 99 PLAN & PROFILE
Station 26+50 to EOP

proud past, promising future

CLARK COUNTY
WASHINGTON

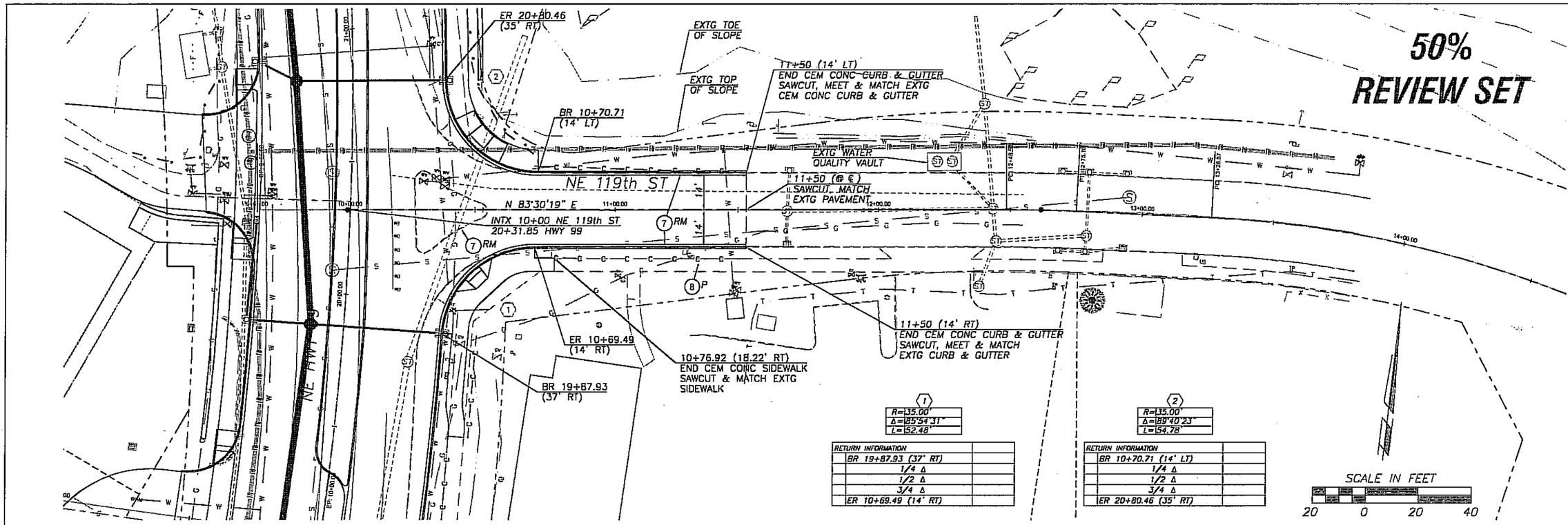

1	
R=	35.00'
Δ=	85°54'31"
L=	52.48'

RETURN INFORMATION	
BR 19+87.93 (37' RT)	
1/4 Δ	
1/2 Δ	
3/4 Δ	
ER 10+69.49 (14' RT)	

2	
R=	35.00'
Δ=	89°40'23"
L=	54.78'

RETURN INFORMATION	
BR 10+70.71 (14' LT)	
1/4 Δ	
1/2 Δ	
3/4 Δ	
ER 20+80.46 (35' RT)	

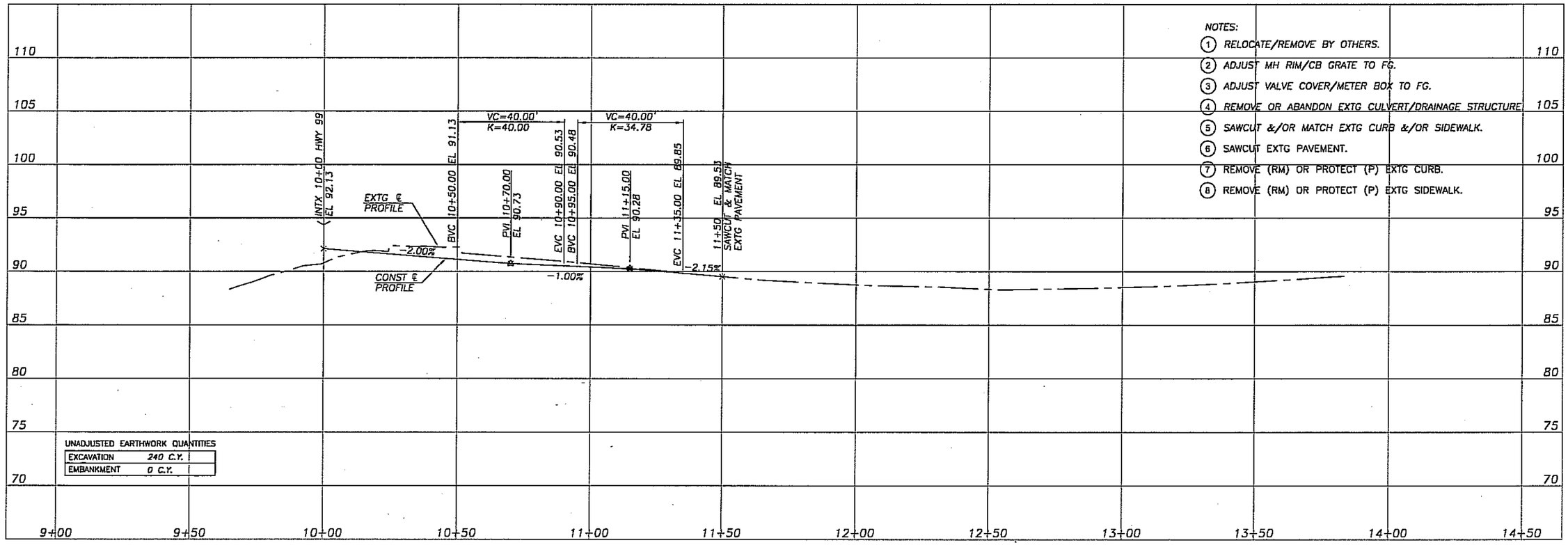

NOTES:

1. RELOCATE/REMOVE BY OTHERS.
2. ADJUST MH RIM/CB GRATE TO FG.
3. ADJUST VALVE COVER/METER BOX TO FG.
4. REMOVE OR ABANDON EXTG CULVERT/DRAINAGE STRUCTURE.
5. SAWCUT &/OR MATCH EXTG CURB &/OR SIDEWALK.
6. SAWCUT EXTG PAVEMENT.
7. REMOVE (RM) OR PROTECT (P) EXTG CURB.
8. REMOVE (RM) OR PROTECT (P) EXTG SIDEWALK.

UNADJUSTED EARTHWORK QUANTITIES

EXCAVATION	240 C.Y.
EMBANKMENT	0 C.Y.

DESIGNED	DPS
DRAWN	DPS
CRP	341322
HOR.	1"=20'
VERT.	1"=5'
DATE	JUN 2006
DWG:	PP05
SHEET 10	OF

CALL 48 HOURS BEFORE YOU DIG 1-800-553-4344 "It's the Law" NORTHWEST UTILITIES NOTIFICATION CENTER

STATE OF WASHINGTON DENNIS ALLISON REGISTERED PROFESSIONAL ENGINEER
EXPIRES: AUG. 10, 2006

HOPPER DENNIS ALLISON PLLC
ENGINEERS • PLANNERS
LANDSCAPE ARCHITECTS
314 W. 15th Street (360) 695-3488
Vancouver, WA 98660-2927 (503) 924-4093
Internet: www.hdaengineers.com FAX (360) 695-8767

DESIGN & ENGINEERING DIVISION
DESIGN SECTION

KLINELINE BRIDGE REPLACEMENT
NE 119th STREET PLAN & PROFILE
Station 10+00 to EOP

proud past, promising future
CLARK COUNTY WASHINGTON

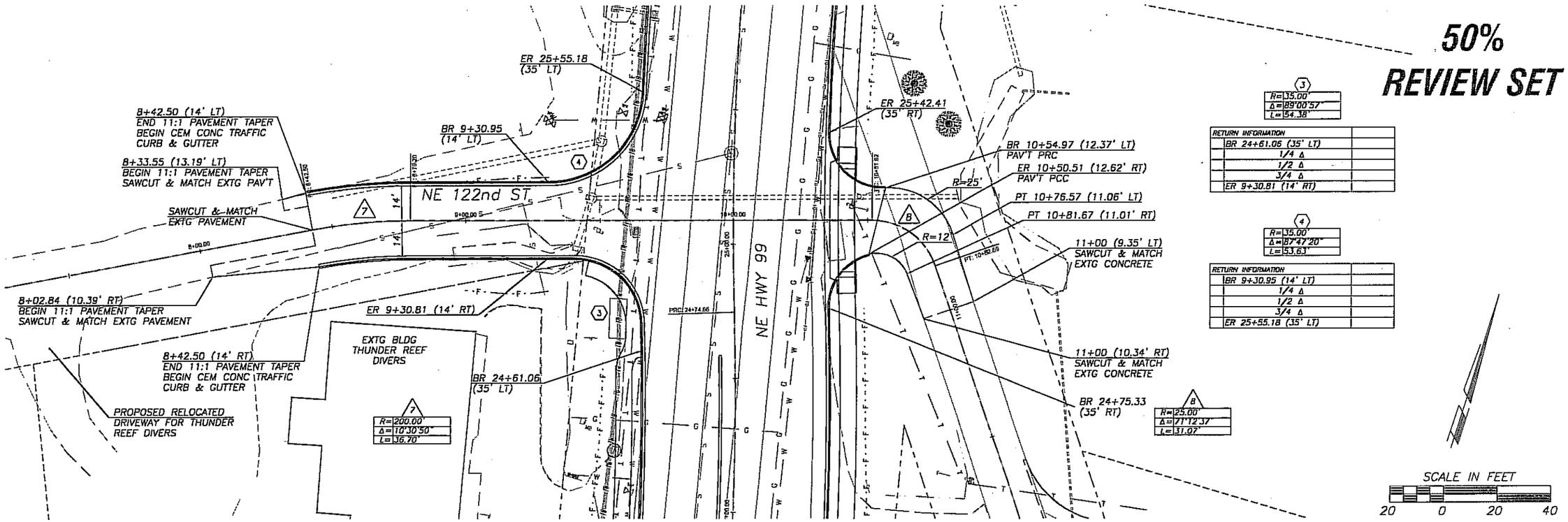

50% REVIEW SET

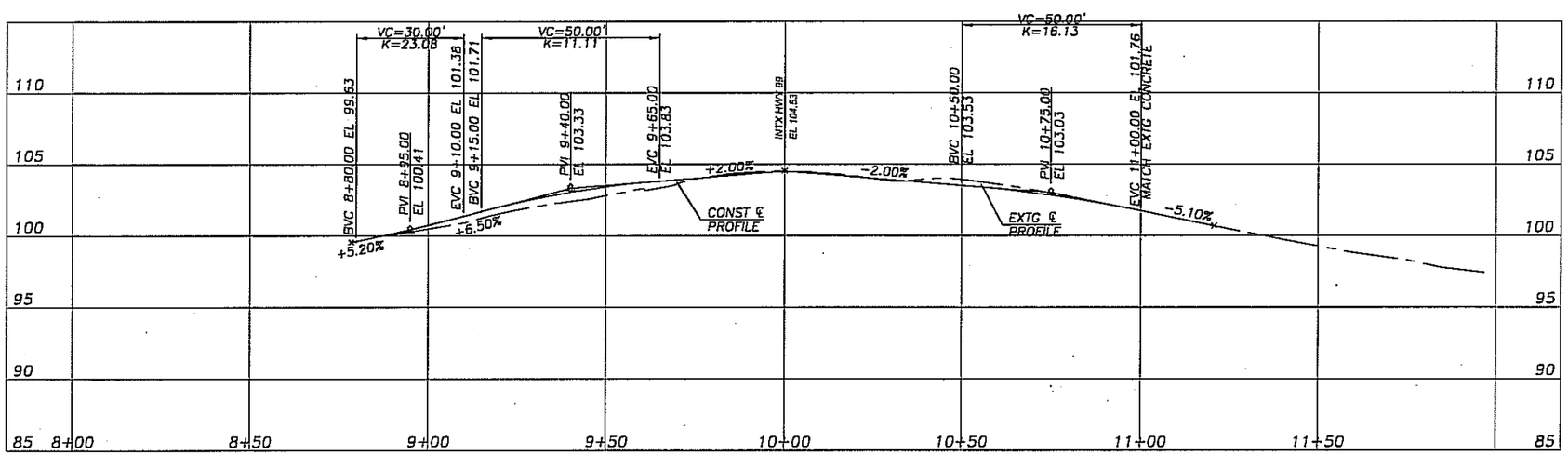

UNADJUSTED EARTHWORK QUANTITIES

EXCAVATION	130 C.Y.
EMBANKMENT	120 C.Y.

NOTES:

1. RELOCATE/REMOVE BY OTHERS.
2. ADJUST MH RIM/CB GRATE TO FG.
3. ADJUST VALVE COVER/METER BOX TO FG.
4. REMOVE OR ABANDON EXTG CULVERT/DRAINAGE STRUCTURE.
5. SAWCUT &/OR MATCH EXTG CURB &/OR SIDEWALK.
6. SAWCUT EXTG PAVEMENT.
7. REMOVE (RM) OR PROTECT (P) EXTG CURB.
8. REMOVE (RM) OR PROTECT (P) EXTG SIDEWALK.

DESIGNED	DPS
DRAWN	DPS
CRP	341.322
HOR.	1"=20'
VERT.	1"=5'
DATE	JUN 2006
DWG:	PP06
SHEET	11 OF

CALL 48 HOURS BEFORE YOU DIG 1-800-553-4344 "It's the Law" NORTHWEST UTILITIES NOTIFICATION CENTER

STATE OF WASHINGTON DENNIS L. NEHI REGISTERED PROFESSIONAL ENGINEER
EXPIRES: AUG. 10, 2006

HOPPER DENNIS JELLISON PLLC
ENGINEERS · PLANNERS
LANDSCAPE ARCHITECTS
314 W. 15th Street
Vancouver, WA 98660-2577
Internet: www.hdjlegacy.com
(360) 693-3488
(503) 223-3488
FAX (360) 695-8767

DESIGN & ENGINEERING DIVISION
DESIGN SECTION

KLINELINE BRIDGE REPLACEMENT
NE 122nd STREET PLAN & PROFILE

proud past, promising future
CLARK COUNTY WASHINGTON

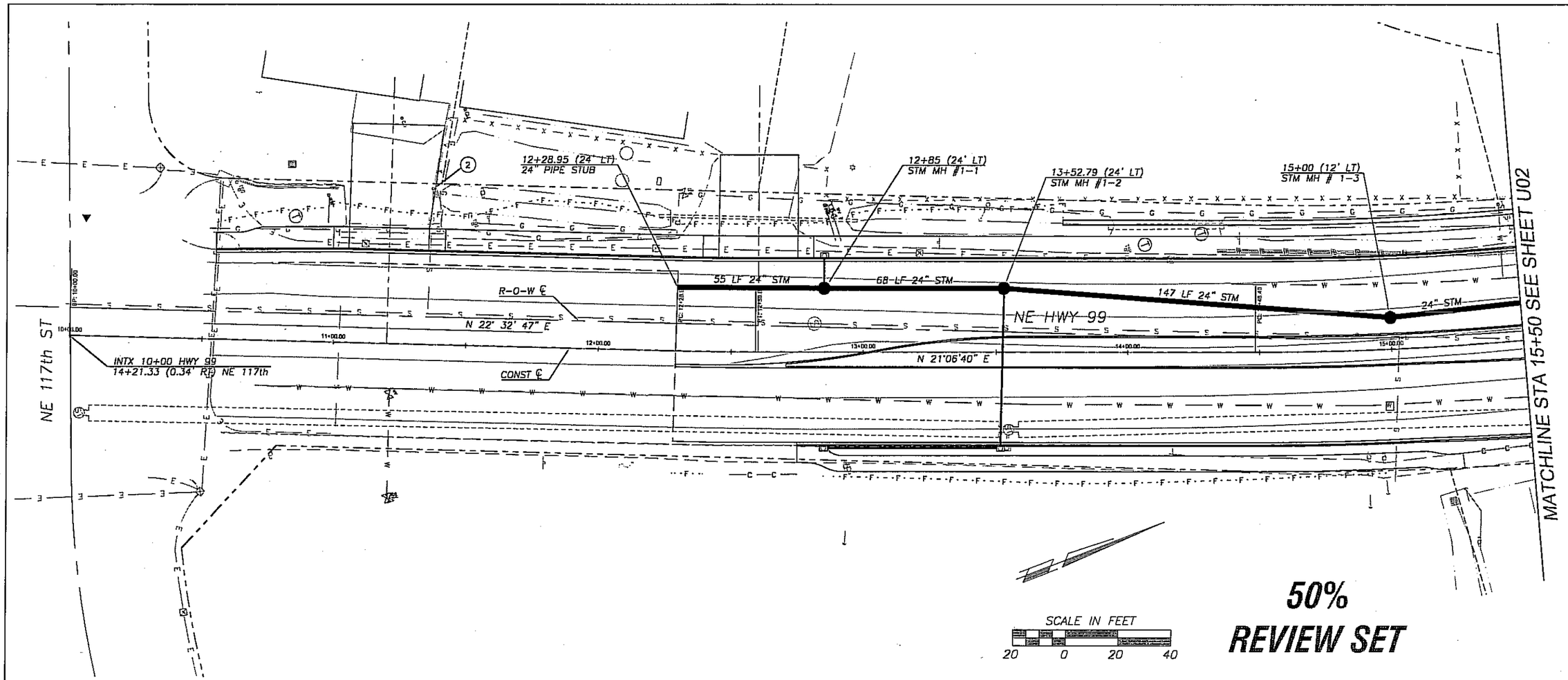

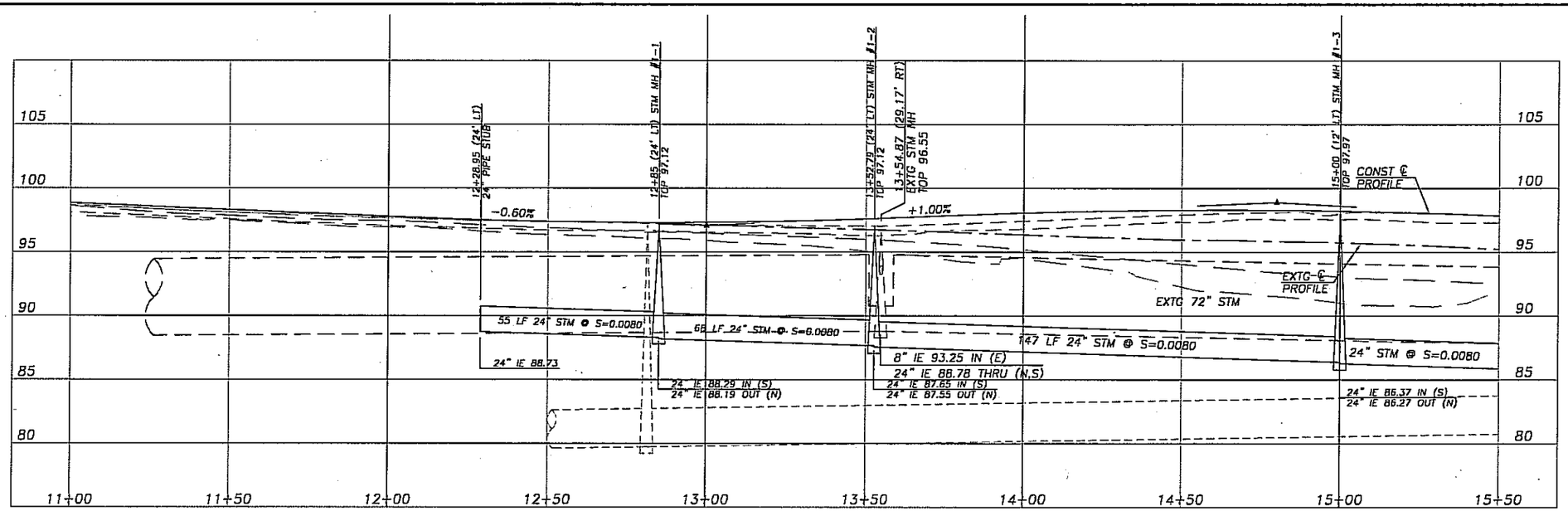

DESIGNED	DPS
DRAWN	DPS
CRP	341322
HOR.	1"=20'
VERT.	1"=5'
DATE	JUN 2006
DWG.	U01
SHEET	12 OF

CALL 48 HOURS BEFORE YOU DIG
1-800-553-4344
"It's the Law"
NORTHWEST UTILITIES NOTIFICATION CENTER

STATE OF WASHINGTON
DENNIS ALLISON
NICHOLAS
REGISTERED PROFESSIONAL ENGINEER
EXPIRES: AUG. 10, 2006

HOPPER DENNIS JELLISON PLLC
ENGINEERS • PLANNERS
LANDSCAPE ARCHITECTS
314 W. 15th Street
Vancouver, WA 98660-3927
(360) 695-3486
(503) 224-4093
Internet: www.hdj-engineers.com
FAX (360) 695-8767

DESIGN & ENGINEERING DIVISION
DESIGN SECTION

KLINELINE BRIDGE REPLACEMENT
HIGHWAY 99 UTILITY PLAN & PROFILE
BOP to Station 15+50

proud past, promising future
CLARK COUNTY
WASHINGTON

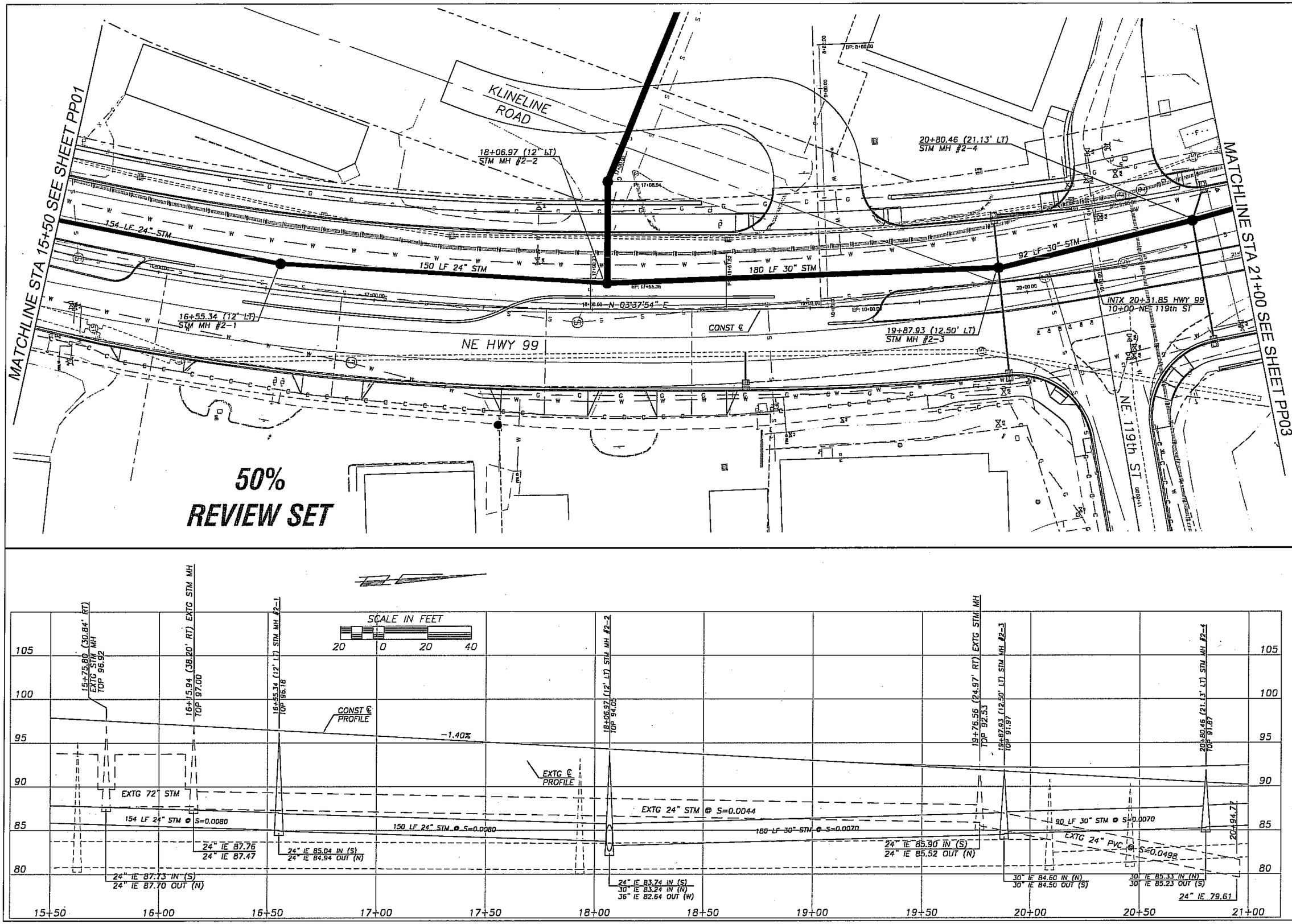

DESIGNED	DPS
DRAWN	DPS
CRP	341322
HOR.	1"=20'
VERT.	1"=5'
DATE	JUN 2006
DWG:	U02
SHEET 13 OF	

CALL 48 HOURS BEFORE YOU DIG 1-800-553-4344 "It's the Law" NORTHWEST UTILITIES NOTIFICATION CENTER

WILLIAM L. NIEMI STATE OF WASHINGTON 22411 REGISTERED PROFESSIONAL ENGINEER
EXPIRES: AUG. 10, 2006

HOPPER DENNIS JELLISON PLLC
ENGINEERS · PLANNERS
LANDSCAPE ARCHITECTS
314 W. 15th Street, Vancouver, WA 98660-2727
(360) 695-3401 (503) 924-4005 FAX (360) 695-8707
Internet: www.hdjengineers.com

DESIGN & ENGINEERING DIVISION
DESIGN SECTION

KLINELINE BRIDGE REPLACEMENT
HIGHWAY 99 UTILITY PLAN & PROFILE
Station 15+50 to Station 21+00

proud past, promising future
CLARK COUNTY WASHINGTON

MATCHLINE STA 21+00 SEE SHEET PP02

MATCHLINE STA 26+50 SEE SHEET PP04

21+75.70
BEGIN BRIDGE
CONSTRUCTION

23+50 (26' LT)
STM MH #3-1

267 LF 30" STM

NE HWY 99

R-O-W ℄

N 12°05'40" W

N 12°16'11" W

INTX 25+08.87 HWY 99
10+00.00 NE 122nd ST

NE 122nd STREET

CONST ℄

SALMON CREEK

23+27.70
END BRIDGE
CONSTRUCTION

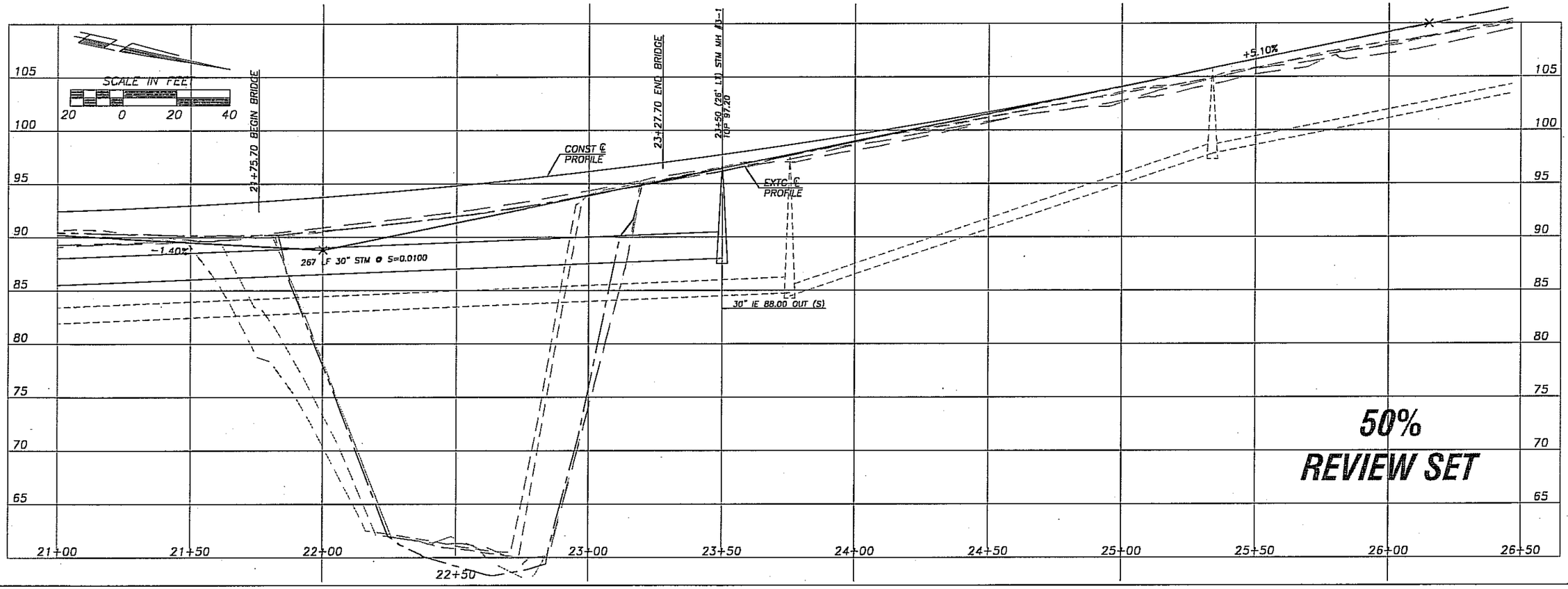

50%
REVIEW SET

DESIGNED DPS
DRAWN DPS
CRP 341322
HOR. 1"=20'
VERT. 1"=5
DATE JUN 2006
DWG: U03
SHEET 14 OF

CALL 48 HOURS BEFORE YOU DIG
1-800-553-4344
"It's the Law"
NORTHWEST UTILITIES NOTIFICATION CENTER

STATE OF WASHINGTON
NICHOLAS J. DENNIS
PROFESSIONAL ENGINEER
EXPIRES: AUG. 10, 2006

HOPPER DENNIS JELLISON P.L.L.C.
ENGINEERS · PLANNERS
LANDSCAPE ARCHITECTS
314 W. 11th Street
Vancouver, WA 98660-2927
Internet: www.hdjengineers.com
(360) 695-3488
(503) 224-4021
FAX (360) 695-8767

DESIGN & ENGINEERING DIVISION
DESIGN SECTION

KLINELINE BRIDGE REPLACEMENT
HIGHWAY 99 UTILITY PLAN & PROFILE
Station 21+00 to Station 26+50

proud past, promising future
CLARK COUNTY
WASHINGTON

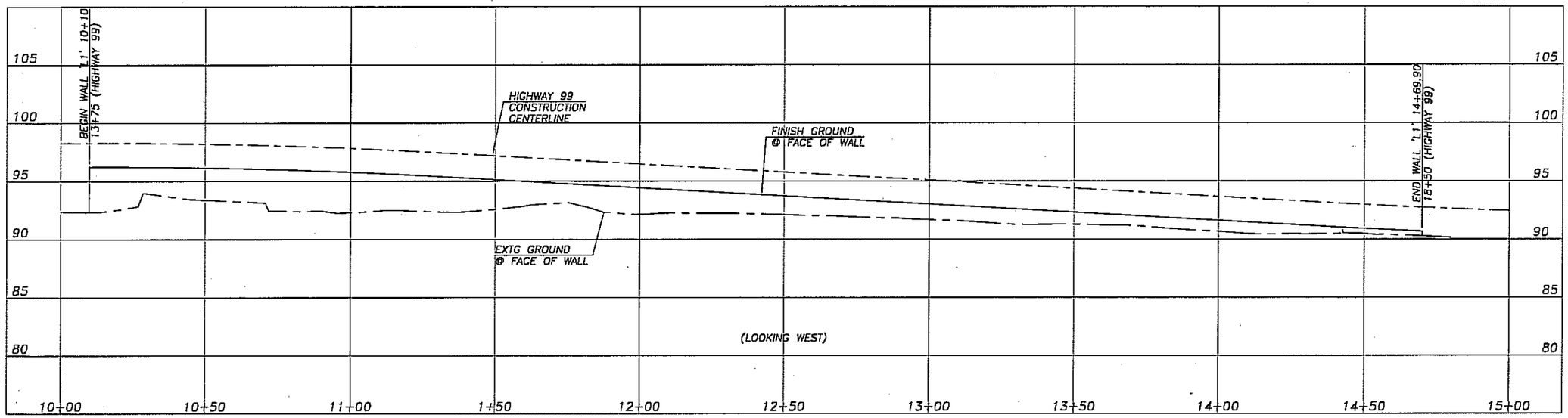

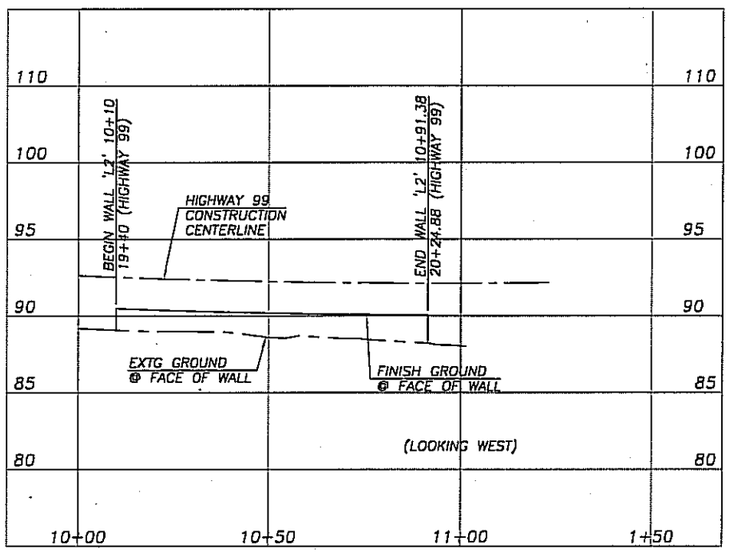

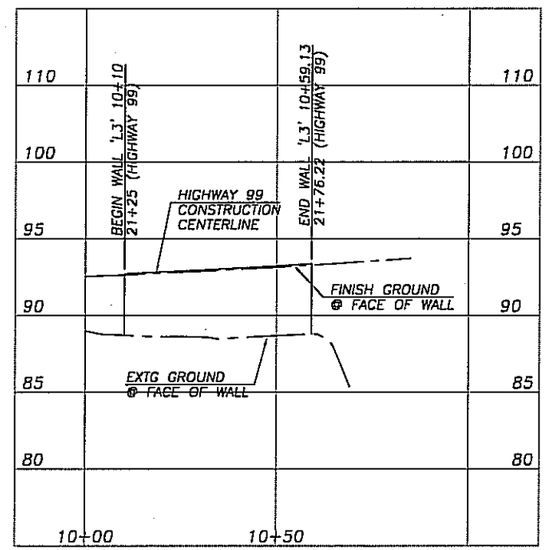

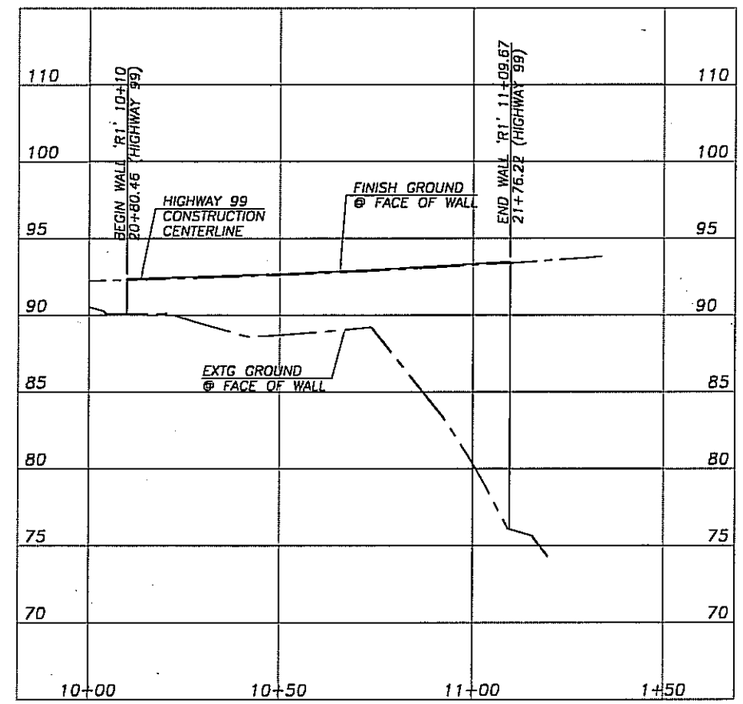

50%
REVIEW SET

DESIGNED	DPS
DRAWN	DPS
CRP	341322
HOR.	1"=20'
VERT.	1"=5'
DATE	JUN 2006
DWG:	W01
SHEET 15	OF

CALL 48 HOURS BEFORE YOU DIG
1-800-553-4344
"It's the Law"
NORTHWEST UTILITIES NOTIFICATION CENTER

STATE OF WASHINGTON
MICHAEL L. HOPPER
REGISTERED PROFESSIONAL ENGINEER
EXPIRES: AUG. 10, 2006

HOPPER DENNIS JELLISON PLLC
ENGINEERS • PLANNERS
LANDSCAPE ARCHITECTS
314 W. 16th Street
Vancouver, WA 98660-2927
(360) 695-3488
(503) 224-4205
FAX (360) 695-8767
Internet: www.hdjengineers.com

DESIGN & ENGINEERING DIVISION
DESIGN SECTION

KLINELINE BRIDGE REPLACEMENT
WALL PLAN & PROFILE

proud past, promising future
CLARK COUNTY
WASHINGTON

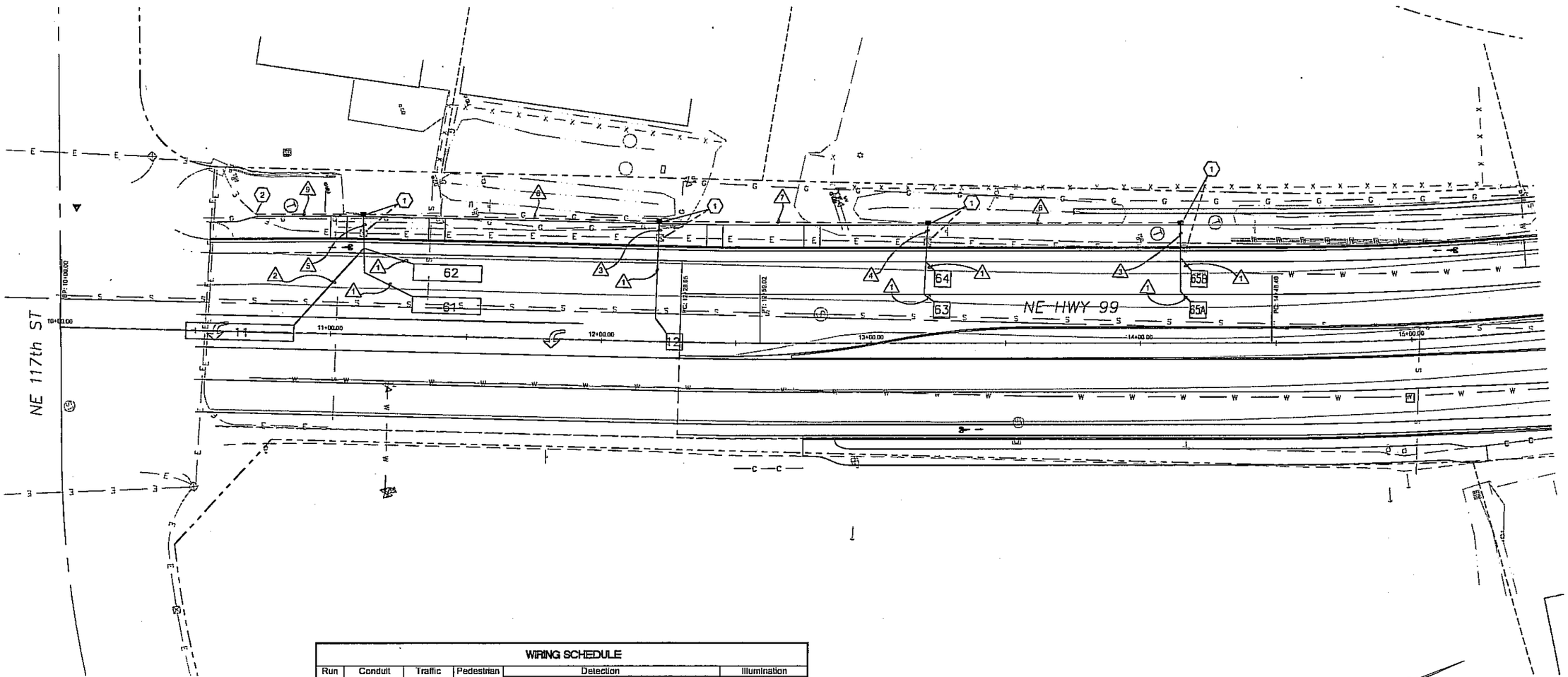

LEGEND

- TYPE 1B JUNCTION BOX
- WIRE NOTE
- CONSTRUCTION NOTE

WIRING SCHEDULE

Run No.	Conduit Or Enclosure	Traffic Signals	Pedestrian Signals	Detection: Inductive Loops	Detection: Pedestrian PPBS	Illumination: Power	Illumination: Branch
1	SAW – CUT			2 #12 TP			
2	SAW – CUT			4 #12 TP			
3	1" PVC			2 #12 TP			
4	1" PVC			4 #12 TP			
5	1" PVC			8 #12 TP			
6	2" PVC			1 #18–4 CC/S			
7	2" PVC			2 #18–4 CC/S			
8	2" PVC			3 #18–4 CC/S			
9	2" PVC			5 #18–4 CC/S			

CC/S Multi-Conductor Shielded Communication Cable
TP Twisted Pairs of Type Use Inductive Loop Detector Wires
PVC Rigid Polyvinyl Chloride Conduit

Construction Notes:

1. Remove and Relocate Existing Junction Box. Remove Upsweeps and Abandon Conduit.
2. Remove All Wiring From Existing Conduit. Intercept Existing Conduit and Connect to New Conduit. Install New Wiring (See Wiring Schedule)

SCALE IN FEET
20 0 20 40

50%
REVIEW SET

DESIGNED	DPS
DRAWN	DPS
CRP	341322
HOR.	1"=20'
VERT.	N/A
DATE	JUN 2006
DWG:	SG01
SHEET 16	OF

CALL 48 HOURS BEFORE YOU DIG
1-800-553-4344
"It's the Law"
NORTHWEST UTILITIES NOTIFICATION CENTER

MICHAEL L. KLEMZ
STATE OF WASHINGTON
REGISTERED PROFESSIONAL ENGINEER
EXPIRES: AUG. 10, 2006

HOPPER DENNIS JELLISON PLLC
ENGINEERS • PLANNERS
LANDSCAPE ARCHITECTS
314 W. 15th Street
Vancouver, WA 98660-2927
Internet: www.dpjpnw.com
(360) 695-3488
(503) 974-4032
FAX (360) 695-8767

DESIGN & ENGINEERING DIVISION
DESIGN SECTION

KLINELINE BRIDGE REPLACEMENT
HIGHWAY 99 SIGNAL MODIFICATION
BOP to Station 15+50

proud past, promising future
CLARK COUNTY WASHINGTON

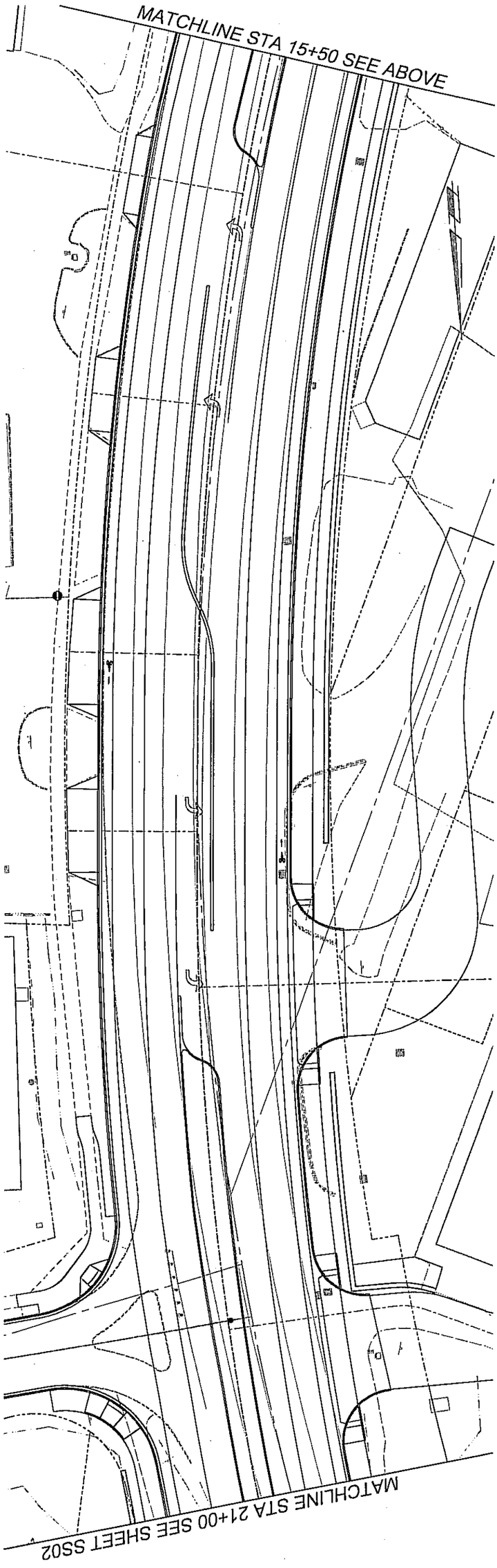

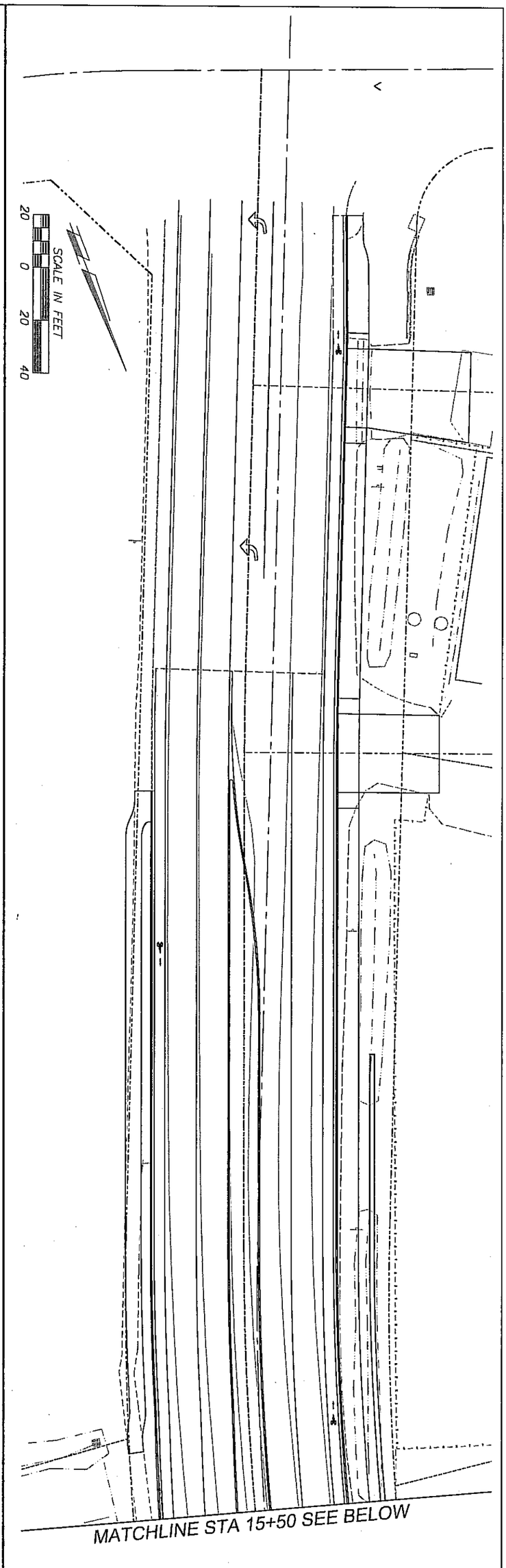

50% REVIEW SET

proud past, promising future

CLARK COUNTY
WASHINGTON

DESIGN & ENGINEERING DIVISION
DESIGN SECTION

KLINELINE BRIDGE REPLACEMENT
HIGHWAY 99 SIGNING & STRIPING
BOP to Station 15+50

HOPPER DENNIS JELLISON P.L.L.C.
ENGINEERS · PLANNERS
LANDSCAPE ARCHITECTS
314 W. 15th Street
Vancouver, WA 98660-2927
Internet: www.hdjengineers.com
(360) 695-3488
(503) 924-4005
FAX (360) 695-8767

MICHAEL L. NIEMI
STATE OF WASHINGTON
REGISTERED PROFESSIONAL ENGINEER
EXPIRES: AUG. 10, 2006

CALL 48 HOURS BEFORE YOU DIG
1-800-553-4344
"It's the Law"
NORTHWEST UTILITIES NOTIFICATION CENTER

DESIGNED	DPS
DRAWN	DPS
CRP	341322
HOR.	1"=20'
VERT.	N/A
DATE	JUN 2006
DWG:	SS01
SHEET	17 OF

MATCHLINE STA 26+50 SEE ABOVE

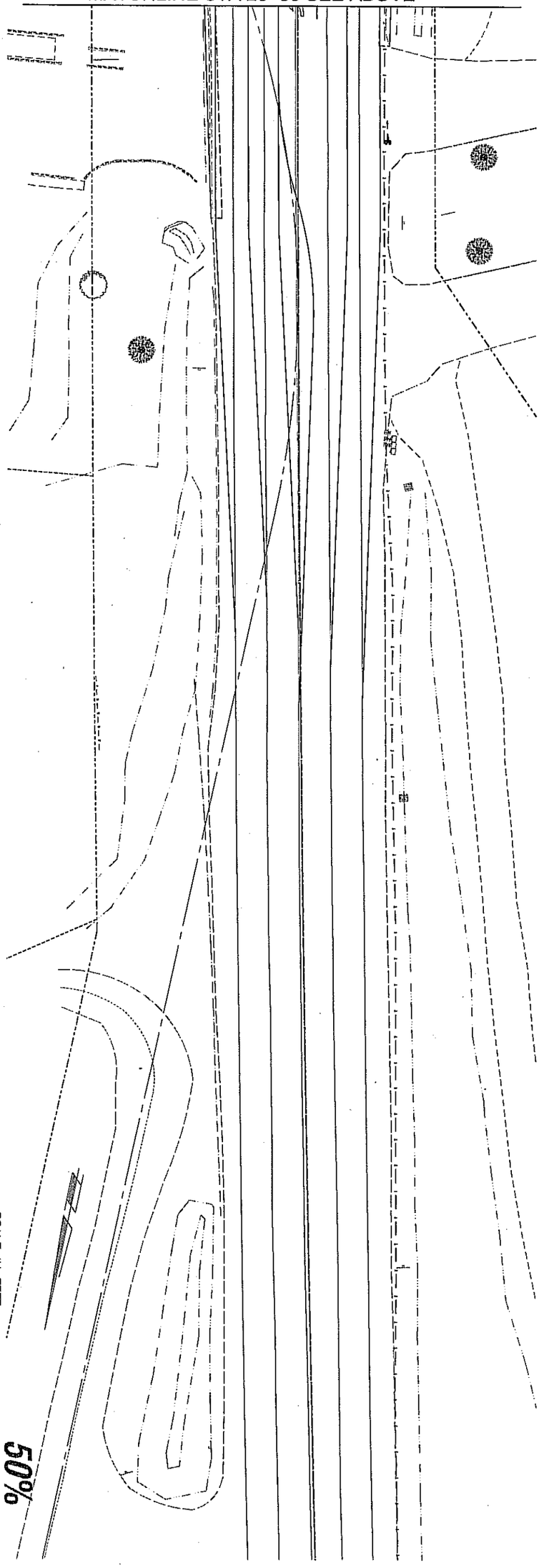

MATCHLINE STA 21+00 SEE SHEET SS01

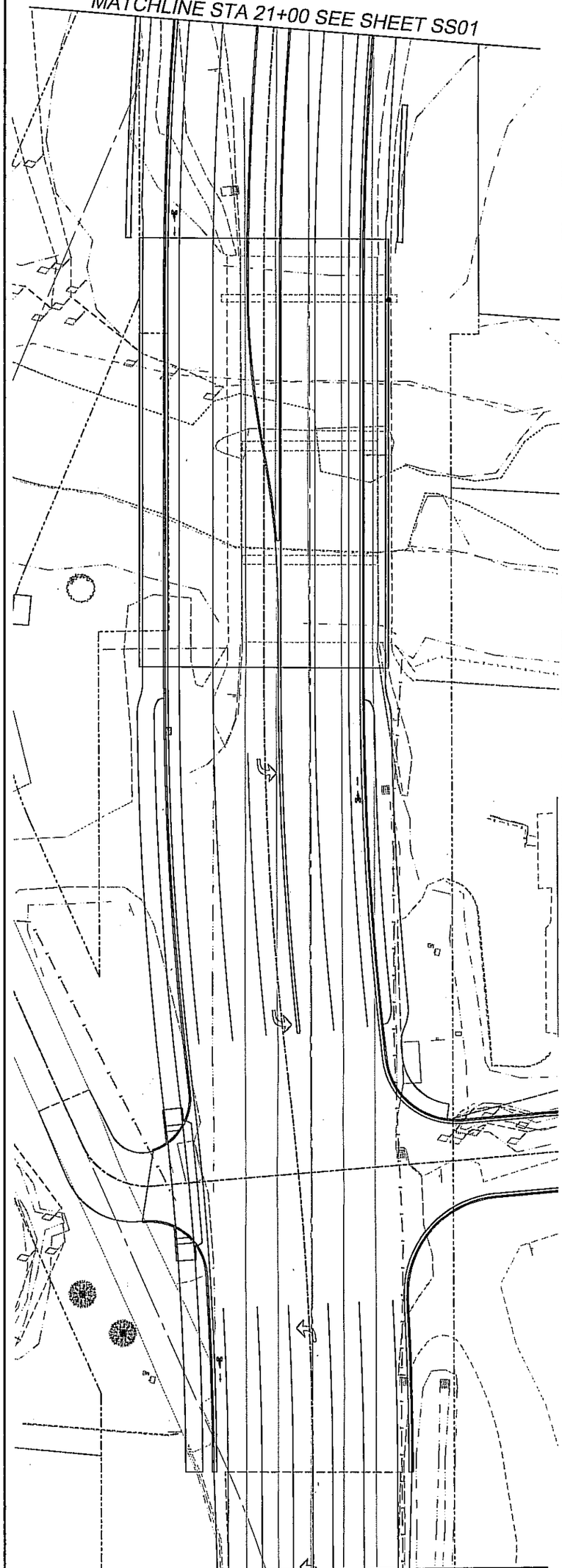

MATCHLINE STA 26+50 SEE BELOW

SCALE IN FEET

20 0 20 40

50%

REVIEW SET

CLARK COUNTY
WASHINGTON
proud past, promising future

DESIGN & ENGINEERING DIVISION
DESIGN SECTION

KLINELINE BRIDGE REPLACEMENT
HIGHWAY 99 SIGNING & STRIPING
Station 21+00 to Station 26+50

HOPPER DENNIS JELLISON P.L.L.C.
ENGINEERS · PLANNERS
LANDSCAPE ARCHITECTS
314 W. 15th Street (360) 695-3488
Vancouver, WA 98660-2927 (503) 924-4005
Internet: www.hdjengineers.com FAX (360) 695-8767

MICHAEL L. KEBLE
STATE OF WASHINGTON
15844
REGISTERED
PROFESSIONAL ENGINEER
EXPIRES: AUG. 10, 2006

CALL 48 HOURS BEFORE YOU DIG
1-800-553-4344
"It's the Law"
NORTHWEST UTILITIES NOTIFICATION CENTER

DESIGNED	DPS
DRAWN	DPS
CRP	341322
HOR.	1"=20'
VERT.	N/A
DATE	JUN 2006
DWG:	SS02
SHEET	18 OF

STORM DRAIN GENERAL NOTES:

1. MATERIALS AND WORKMANSHIP FOR STREET AND DRAINAGE WORK SHALL CONFORM TO THE LATEST EDITION OF THE WSDOT/APWA "STANDARD SPECIFICATIONS FOR ROAD, BRIDGE AND MUNICIPAL CONSTRUCTION" (CCC 40.380.040(A)), AND STANDARD DETAIL SHEETS ATTACHED HEREWITH.

2. PROOF OF LIABILITY INSURANCE IN THE AMOUNT OF FIVE HUNDRED THOUSAND DOLLARS ($500,000) SHALL BE SUBMITTED TO CLARK COUNTY DEPARTMENT OF COMMUNITY DEVELOPMENT, DIVISION OF ENGINEERING SERVICES PRIOR TO THE PRE-CONSTRUCTION MEETING (CCC40.380.050(E)).

3. PRECAST DRAINAGE STRUCTURES PREVIOUSLY APPROVED BY WASHINGTON DEPARTMENT OF TRANSPORTATION AND THE CLARK COUNTY PUBLIC WORKS DEPARTMENT MAY BE SUBSTITUTED FOR ANY NEW STANDARD CAST-IN-PLACE UNIT. HOWEVER, IT IS THE CONTRACTOR'S RESPONSIBILITY TO ASSURE THAT THE PRECAST DRAINAGE STRUCTURES COMPLY WITH THE DESIGN INVERTS AND RIM ELEVATIONS.

4. THE CONTRACTOR IS TO VERIFY ALL INVERT AND TOP ELEVATIONS OF EXISTING STORM DRAINS, AND REPORT ANY DISCREPANCIES IMMEDIATELY TO THE ENGINEER.

5. CONTRACTOR TO VERIFY CENTERLINE AND TOP OF THE CURB ELEVATIONS PRIOR TO CONSTRUCTION TO ENSURE COMPLIANCE WITH THE CONSTRUCTION DRAWINGS AND REPORT ANY DISCREPANCIES IMMEDIATELY TO THE ENGINEER.

6. THE CONTRACTOR SHALL BE RESPONSIBLE FOR DETERMINING THE LOCATION OF ALL UNDERGROUND UTILITIES PRIOR TO THE START OF CONSTRUCTION AND TO NOTIFY THE ENGINEER OF ANY POTENTIAL CONFLICTS. THE CONTRACTOR SHALL DIG TEST HOLES OVER ALL EXISTING UTILITIES PRIOR TO CONSTRUCTION TO DETERMINE THEIR EXACT LOCATION. CALL (360) 696-4848 FOR UTILITIES LOCATE, A MINIMUM OF 48 HOURS PRIOR TO START OF CONSTRUCTION.

7. IT SHALL BE THE RESPONSIBILITY OF THE DEVELOPER AND/OR CONTRACTOR TO PROCURE ALL APPLICABLE PERMITS, LICENSES AND CERTIFICATES RELATIVE TO THE TRADES TO COMPLETE THE PROJECT AND FOR THE USE OF SUCH WORK WHEN COMPLETED. COMPLIANCE SHALL BE AT ALL LEVELS: FEDERAL, STATE AND COUNTY RELATING TO THE PERFORMANCE OF THIS WORK.

8. ALL EROSION CONTROL DEVICES SHALL BE CONSTRUCTED IN ACCORDANCE WITH THE EROSION CONTROL PLAN AND EROSION CONTROL DETAILS, PRIOR TO START OF CONSTRUCTION (CCC 40.380.060(E)).

9. THE CONTRACTOR SHALL SUBMIT A TRAFFIC CONTROL PLAN. THIS PLAN SHALL BE APPROVED BY PUBLIC WORKS-TRANSPORTATION SYSTEMS DIVISION (397-2375 X4523). APPROVAL SHALL BE OBTAINED PRIOR TO THE PRE-CONSTRUCTION MEETING AND START OF CONSTHUCTION.

10. THE DEVELOPER SHALL OBTAIN ALL OFFSITE CONSTRUCTION EASEMENTS PRIOR TO THE START OF CONSTRUCTION. THE APPLICANT SHALL VERIFY THAT ALL OFFSITE UTILITES EASEMENTS HAVE BEEN OBTAINED BY THE OWNER PRIOR TO PLAN APPROVAL FOR OFFSITE CONSTRUCTION.

11. ALL CATCH BASINS AND MANHOLES CAPABLE OF ACCEPTING STORMWATER SHALL BE STENCILED AS FOLLOW PER CCC 40.380.040(D)(10)(a & b).

INFILTRATION SYSTEMS - "PLEASE PROTECT - DRAINS TO DRINKING WATER"
ALL OTHER SYSTEMS - "PLEASE PROTECT - DRAINS TO STREAM"

12. PER CCC 40.380.040(D)(10)(c & d) SIGNS SHALL BE INSTALLED AS FOLLOWS:

ALONG WATER QUALITY BIOFILTRATION SYSTEMS TO READ "WATER QUALITY FILTER - PLEASE LEAVE VEGETATED"

FENCED RETENTION AND RETENTION BASINS TO READ "(PUBLIC/PRIVATE) STORMWATER CONTROL FACILITY"

STENCILING COLORS SHALL BE BLUE BACKGROUND W/ WHITE LETTERING
CONTACT COUNTY INSPECTION AT 397-2375 EXT. 4095 FOR STENCILING STANDARDS

PRIVATE SYSTEMS NOT MAINTAINED BY CLARK COUNTY SHALL INCLUDE ADDRESS AND CONTACT INFORMATION OF RESPONSIBLE PARTY.

13. VEGETATION IN BIOFILTRATION SYSTEMS SHALL BECOME FULLY ESTABLISHED PRIOR TO COMMENCING WITH INSTALLATION OF A.C. PAVEMENT FOR ALL AREAS DRAINING INTO THE WATER QUALITY SYSTEM. WATER QUALITY SWALES SHOULD BE GENERALLY VEGETATED WITH RECOMMENDED GRASSES IN THE SWALE BOTTOM; GRASSES, GROUND COVER, AND SHRUBS ON THE SIDE SLOPES; AND GROUND COVERS, SHRUBS, AND TREES ON THE ADJACENT DRY AREAS. PLANTING PLANS MUST BE INDIVIDUALLY TAILORED TO UNIQUE CONDITIONS AT EACH SITE.

SHEET 1 OF 2

NO.	REVISIONS	DATE	BY

Department of Public Works — CLARK COUNTY WASHINGTON — proud past, promising future
STORM DRAIN GENERAL NOTES — APPROVED — COUNTY ENGINEER — 11/01/04 — STANDARD D1.0

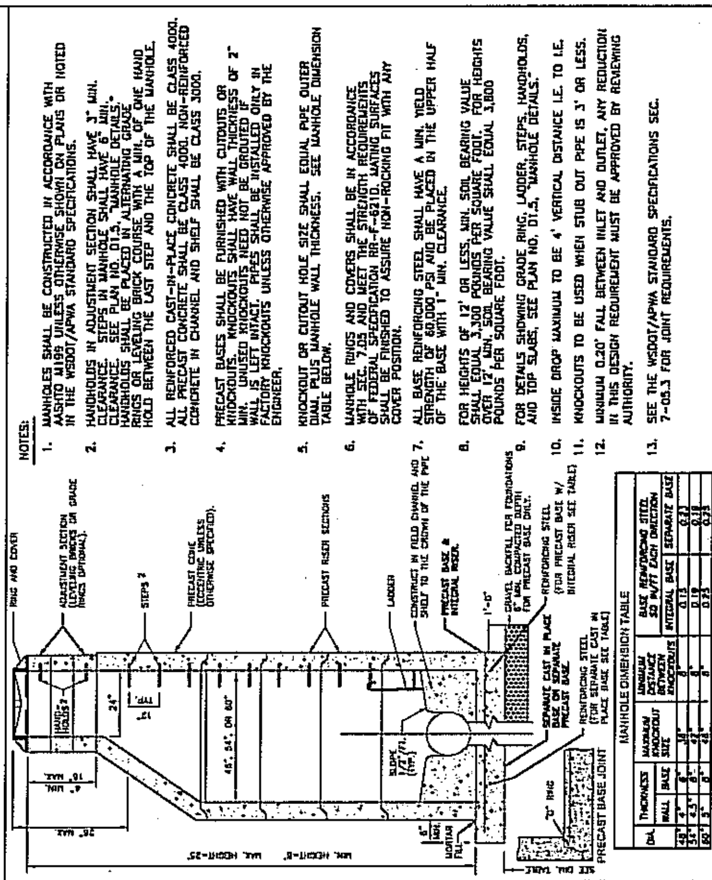

Department of Public Works — CLARK COUNTY WASHINGTON — proud past, promising future
STANDARD MANHOLE TYPE 1 48", 54", & 60" — APPROVED — COUNTY ENGINEER — 11/01/04 — STANDARD D1.1

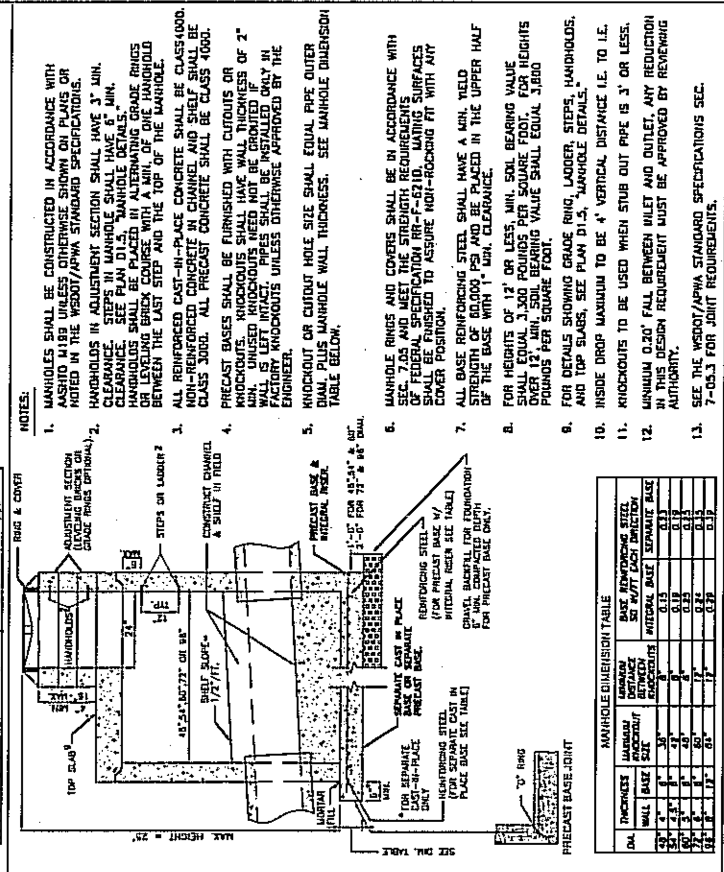

Department of Public Works — CLARK COUNTY WASHINGTON — proud past, promising future
MANHOLE TYPE 3 48", 54", 60", 72", & 96" — APPROVED — COUNTY ENGINEER — 11/01/04 — STANDARD D1.3

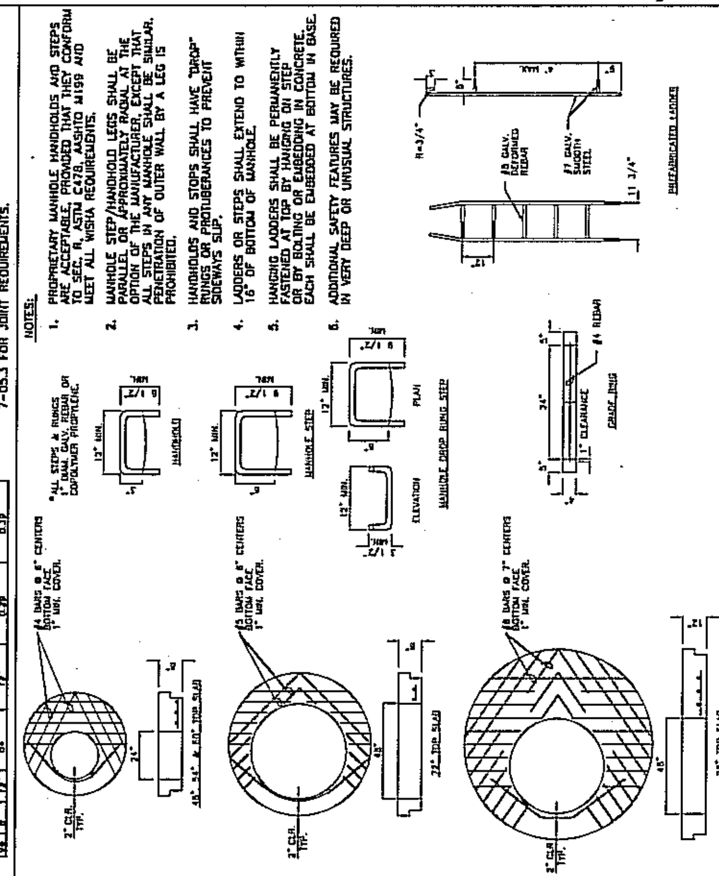

Department of Public Works — CLARK COUNTY WASHINGTON — proud past, promising future
MANHOLE DETAILS — APPROVED — COUNTY ENGINEER — 11/01/04 — STANDARD D1.5

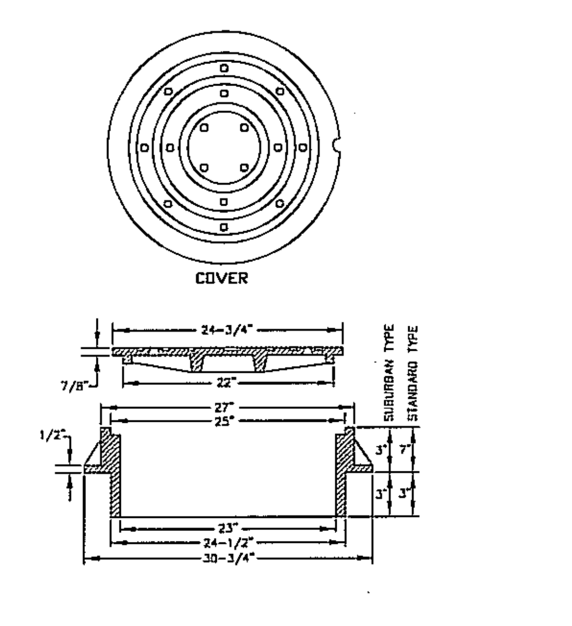

NOTES:

1. USE SUBURBAN TYPE ONLY IN NON-TRAFFIC AREAS, AND ONLY WITH APPROVAL BY COUNTY.
2. COVER MATERIAL TO BE DUCTILE IRON ASTM A536 GRADE 80-55-06
3. FRAME MATERIAL TO BE GRAY CAST IRON ASTM A-48 CLASS 30.
4. SEE WSDOT STANDARD SPECIFICATIONS SEC. 7.05
5. COVER AND FRAME TO BE MACHINED TO A TRUE BEARING ALL AROUND.
6. NOTCH LID FOR LIFTING HOOK.

Department of Public Works — CLARK COUNTY WASHINGTON — proud past, promising future
STANDARD MANHOLE FRAME AND COVER — APPROVED — COUNTY ENGINEER — 11/01/04 — STANDARD D1.6

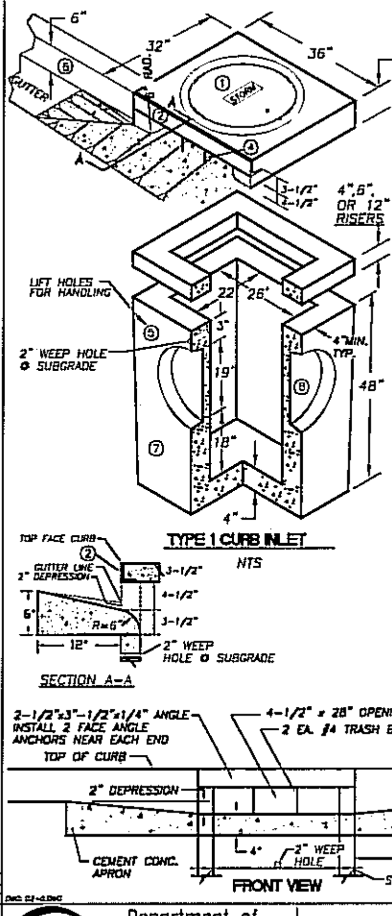

① 24" CAST IRON LOCKING FRAME & COVER
② 2 1/2"x3 1/2"x1/4"x 35 7/8" GALVANIZED ANGLE IRON
③ 2"x2 1/2"x1/4"x33" GALVANIZED ANGLE IRON
④ 2 EA. #4 TRASH BARS @ 9" O.C.
⑤ 2 EA. BASE UNIT LIFT HOLES
⑥ 6" CURB AND 12" GUTTERS
⑦ STANDARD TYPE 1 BASE UNIT
⑧ PIPE KNOCKOUTS ALL FOUR SIDES.

NOTES:

1. CURB INLET TO BE CONSTRUCTED IN ACCORDANCE WITH ASTM C478 & C890 UNLESS SHOWN ON PLANS OR NOTED IN STANDARD SPECIFICATIONS.
2. REINFORCING FOR INLET UNIT, 3 EA. #4 HORZONTAL BARS.
3. REINFORCING FOR TOP UNIT, 2 EA. #3 HORZONTAL BARS.
4. ALL REBAR TO MEET ASTM A615 GRADE 60.
5. AS AN ACCEPTABLE ALTERNATIVE TO REBAR, WELDED WIRE FABRIC HAVING A MIN. AREA OF 0.12 SQAURE INCHES PER FOOT MAY BE USED. WELDED WIRE FABRIC SHALL COMPLY TO ASTM A497. WIRE FABRIC SHALL NOT BE PLACED IN KNOCKOUTS.
6. ALL REINFORCED CAST-IN-PLACE CONCRETE SHALL BE CLASS 4,000.
7. PRECAST BASES SHALL BE FURNISHED WITH CUTOUTS OR KNOCKOUTS. KNOCKOUTS SHALL HAVE A WALL THICKNESS OF 2" MIN. ALL PIPE SHALL BE INSTALLED IN FACTORY PROVIDED KNOCKOUTS. UNUSED KNOCKOUTS NEED NOT BE GROUTED IF WALL IS LEFT INTACT.
8. KNOCKOUTS OR CUTOUT HOLE SIZE IS EQUAL TO PIPE OUTER DIAM. PLUS INLET WALL THICKNESS.
9. ROUND KNOCKOUTS MAY BE ON ALL 4 SIDES WITH MAX. DIAM. OF 17".
10. THE MAX. DEPTH FROM THE FINISHED GRADE TO THE PIPE INVERT IS 5'-0".
11. ANY PROTUDING ENDS OF PIPES SHALL BE TRIMMED FLUSH WITH THE INSIDE WALLS AND GROUTED TO THE SATISFACTION OF ENGINEER.
12. GUTTER IS TAPERED DOWN TO INLET.
13. INSTALL REMOVABLE APWA TYPE 60A TRAP OR EQUAL, SEE STD. PLAN D2.1.
14. CONTRACTOR SHALL HAVE THE OPTION OF FURNISHING PRECAST OR CAST-IN-PLACE INLET STRUCTURES, UNLESS SPECIFIED.

Department of Public Works — CLARK COUNTY WASHINGTON — proud past, promising future
STANDARD TYPE 1 CURB INLET — APPROVED — COUNTY ENGINEER — 11/01/04 — STANDARD D2.0

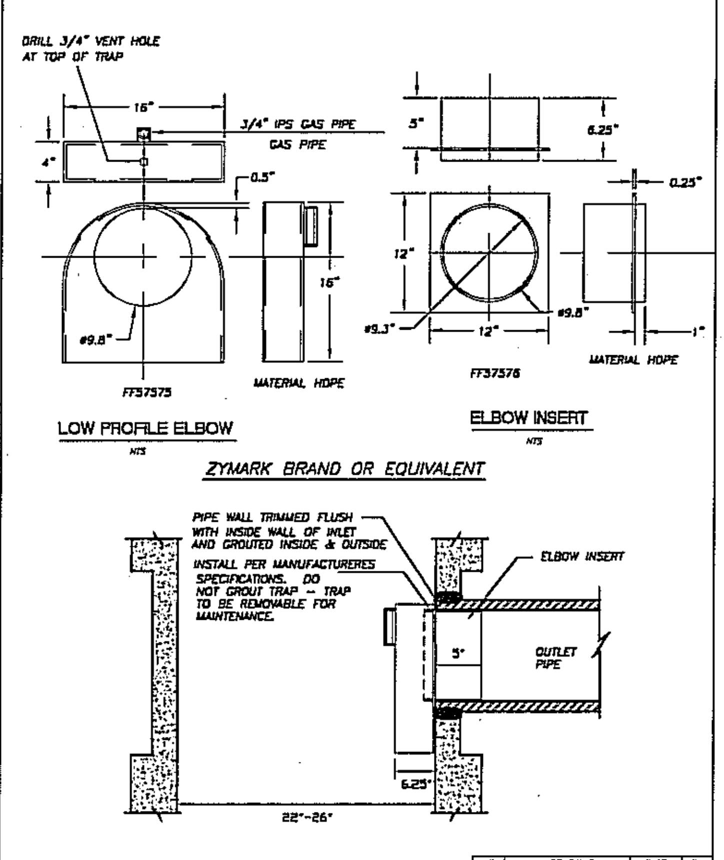

Department of Public Works — CLARK COUNTY WASHINGTON — proud past, promising future
CATCH BASIN OUTLET PIPE TRAP — APPROVED — COUNTY ENGINEER — 11/01/04 — STANDARD D2.1

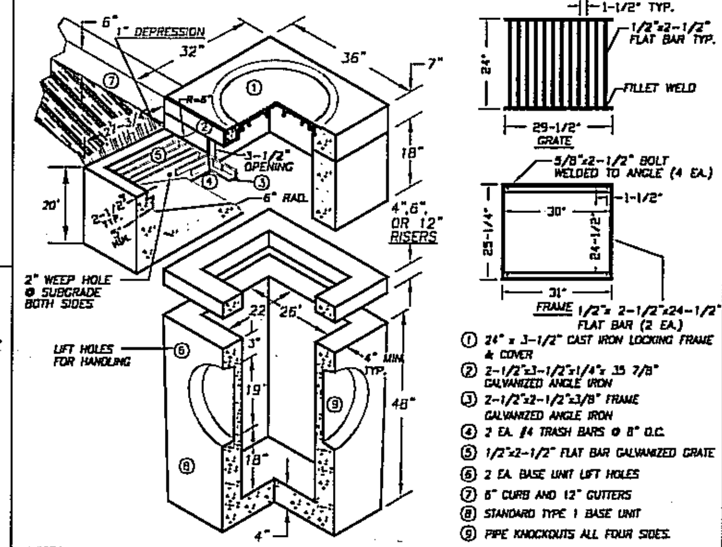

① 24" x 3-1/2" CAST IRON LOCKING FRAME & COVER
② 2-1/2"x3-1/2"x1/4"x 35 7/8" GALVANIZED ANGLE IRON
③ 2-1/2"x2-1/2"x3/8" FRAME GALVANIZED ANGLE IRON
④ 2 EA. #4 TRASH BARS @ 8" O.C.
⑤ 1/2"x2-1/2" FLAT BAR GALVANIZED GRATE
⑥ 2 EA. BASE UNIT LIFT HOLES
⑦ 6" CURB AND 12" GUTTERS
⑧ STANDARD TYPE 1 BASE UNIT
⑨ PIPE KNOCKOUTS ALL FOUR SIDES.

NOTES

1. COMBINATION CURB INLET TO BE CONSTRUCTED IN ACCORDANCE WITH ASTM C478 & C890 UNLESS SHOWN ON PLANS OR NOTED IN STANDARD SPECIFICATIONS.
2. REINFORCING FOR INLET UNIT, 3 EA. #4 HORZONTAL BARS; REINFORCING FOR TOP UNIT, 2 EA. #3 HORZONTAL BARS; REINFORCING FOR INLET SLOPED BASE, 4x4 MESH.
3. ALL REBAR TO MEET ASTM A615 GRADE 60.
4. AS AN ACCEPTABLE ALTERNATIVE TO REBAR, WELDED WIRE FABRIC HAVING A MIN. AREA OF 0.12 SQAURE INCHES PER FOOT MAY BE USED. WELDED WIRE FABRIC SHALL COMPLY TO ASTM A497. WIRE FABRIC SHALL NOT BE PLACED IN KNOCKOUTS.
5. ALL REINFORCED CAST-IN-PLACE CONCRETE SHALL BE CLASS 4,000.
6 PRECAST BASES SHALL BE FURNISHED WITH CUTOUTS OR KNOCKOUTS. KNOCKOUTS SHALL HAVE A WALL THICKNESS OF 2" MIN. ALL PIPE SHALL BE INSTALLED IN FACTORY PROVIDED KNOCKOUTS. UNUSED KNOCKOUTS NEED NOT BE GROUTED IF WALL IS LEFT INTACT.
7. KNOCKOUTS OR CUTOUT HOLE SIZE IS EQUAL TO PIPE OUTER DIAM. PLUS INLET WALL THICKNESS.
8. ROUND KNOCKOUTS MAY BE ON ALL 4 SIDES WITH MAX. DIAM. OF 17".
9. THE MAX. DEPTH FROM THE FINISHED GRADE TO THE PIPE INVERT IS 5'-0".
10. ANY PROTUDING ENDS OF PIPES SHALL BE TRIMMED FLUSH WITH THE INSIDE WALLS AND GROUTED TO THE SATISFACTION OF ENGINEER.
11. GRATE TO HAVE 1" DEPRESSION AT GUTTER INLET WITH GUTTER TO BE TAPERED DOWN TO INLET.
12. INSTALL REMOVABLE APWA TYPE 60A TRAP OR EQUAL. SEE STD. PLAN D2.1.
13. CONTRACTOR SHALL HAVE THE OPTION OF FURNISHING PRECAST OR CAST-IN-PLACE INLET STRUCTURES, UNLESS SPECIFIED.
14. SEE STD. PLAN 4.1 FOR BASIN GUTTER PAN DETAIL.

Department of Public Works — CLARK COUNTY WASHINGTON — proud past, promising future
STANDARD TYPE 1 COMBINATION CURB INLET — APPROVED — COUNTY ENGINEER — 11/01/04 — STANDARD D3.0

DESIGN & ENGINEERING DIVISION
DESIGN SECTION

KLINELINE BRIDGE REPLACEMENT
CLARK COUNTY
STANDARD DRAINAGE DETAILS

CLARK COUNTY WASHINGTON — proud past, promising future

HOPPER DENNIS JELLISON P.L.L.C.
ENGINEERS · PLANNERS
LANDSCAPE ARCHITECTS
314 W. 15th Street
Vancouver, WA 98660-2927
Internet: www.hdjengineers.com
(360) 695-3488
(503) 924-4005
FAX (360) 695-8767

CALL 48 HOURS BEFORE YOU DIG
1-800-553-4344
"It's the Law"
NORTHWEST UTILITIES NOTIFICATION CENTER

DESIGNED	
DRAWN	
CRP	341322
HOR.	N/A
VERT.	N/A
DATE	JUN 2006
DWG:	D01
SHEET	19 OF

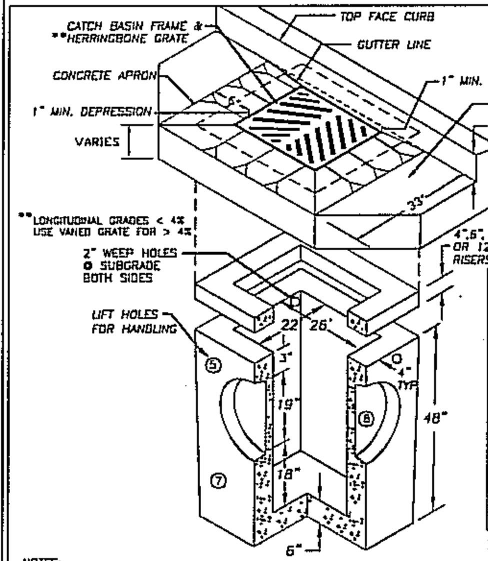

PIPE ALLOWANCES

PIPE MATERIAL	MAXIMUM INSIDE DIAMETER
REINFORCED OR PLAIN CONCRETE	18"
ALL METAL PIPE	21"
CPSSP ✱ (Std. Spec. 9-05.20)	18"
SOLID WALL PVC (Std. Spec. 9-05.12(1))	21"
PROFILE WALL PVC (Std. Spec. 9-05.12(2))	21"

✱ CORRUGATED POLYETHYLENE STORM SEWER PIPE

NOTES:

1. CURB INLET TO BE CONSTRUCTED IN ACCORDANCE WITH ASTM C478 (AASHTO) M 199) & C890 UNLESS SHOWN ON PLANS OR NOTED IN STANDARD SPECIFICATIONS.
2. REINFORCING FOR INLET UNIT, 3 EA. #4 HORIZONTAL BARS.
3. REINFORCING FOR TOP UNIT, 2 EA. #3 HORIZONTAL BARS.
4. ALL REBAR TO MEET ASTM A615 GRADE 60.
5. AS AN ACCEPTABLE ALTERNATIVE TO REBAR, WELDED WIRE FABRIC HAVING A MIN. AREA OF 0.12 SQUARE INCHES PER FOOT MAY BE USED. WELDED WIRE FABRIC SHALL COMPLY TO ASTM A497. WIRE FABRIC SHALL NOT BE PLACED IN KNOCKOUTS.
6. ALL REINFORCED CAST-IN-PLACE CONCRETE SHALL BE CLASS 4,000.
7. PRECAST BASES SHALL BE FURNISHED WITH CUTOUTS OR KNOCKOUTS. KNOCKOUTS SHALL HAVE A WALL THICKNESS OF 2" MIN. ALL PIPE SHALL BE INSTALLED IN FACTORY PROVIDED KNOCKOUTS. UNUSED KNOCKOUTS NEED NOT BE GROUTED IF WALL IS LEFT INTACT.
8. KNOCKOUTS OR CUTOUT HOLE SIZE IS EQUAL TO PIPE OUTER DIAM. PLUS INLET WALL THICKNESS.
9. ROUND KNOCKOUTS MAY BE ON ALL 4 SIDES WITH MAX. DIAM. OF 20".
10. THE MAX. DEPTH FROM THE FINISHED GRADE TO THE PIPE INVERT IS 5'-0".
11. ANY PROTRUDING ENDS OF PIPES SHALL BE TRIMMED FLUSH WITH THE INSIDE WALLS AND GROUTED TO THE SATISFACTION OF ENGINEER.
12. CATCH BASIN FRAME AND GRATE SHALL BE IN ACCORDANCE WITH WDOT STANDARD SPECIFICATIONS AND MEET THE STRENGTH REQUIREMENTS OF FEDERAL SPECIFICATION RR-F-621D. MATING SURFACES SHALL BE FINISHED TO ASSURE NON-ROCKING FIT WITH ANY COVER POSITION.
13. FRAME MAY BE INSTALLED WITH FLANGE DOWN OR CAST INTO RISER.
14 INSTALL REMOVABLE APWA TYPE 60A TRAP OR EQUAL, SEE STD. PLAN D2.1.
15. CONTRACTOR SHALL HAVE THE OPTION OF FURNISHING PRECAST OR CAST-IN-PLACE INLET STRUCTURES, UNLESS SPECIFIED.

Department of Public Works — CLARK COUNTY WASHINGTON — proud past, promising future

STANDARD CATCH BASIN TYPE 1 — APPROVED 01/01/04 — COUNTY ENGINEER — STANDARD PLAN No. D4.0

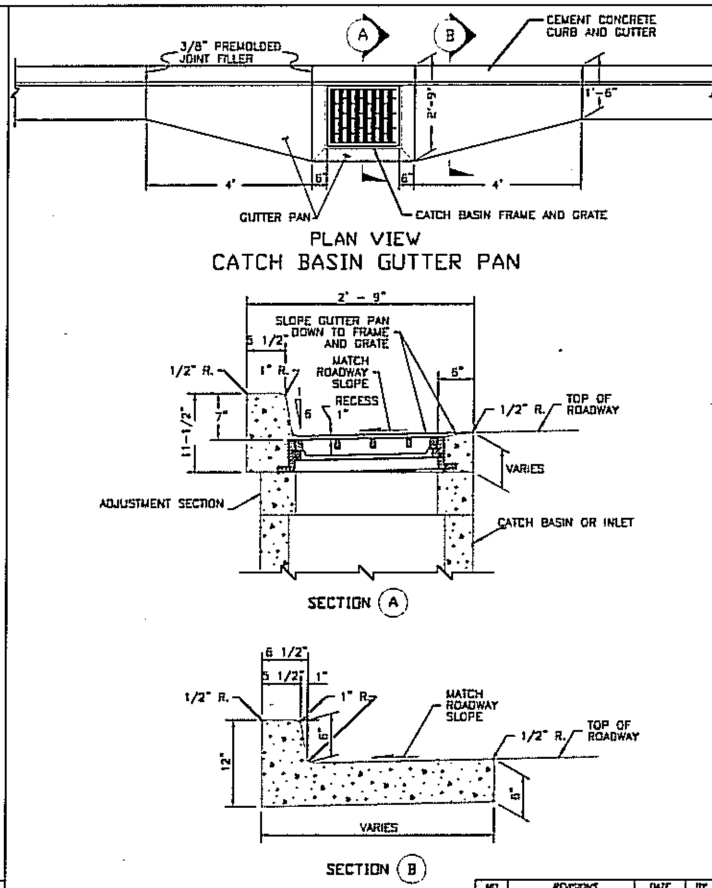

Department of Public Works — CLARK COUNTY WASHINGTON — proud past, promising future

CATCH BASIN GUTTER PAN — APPROVED 01/01/04 — COUNTY ENGINEER — STANDARD PLAN No. D4.1

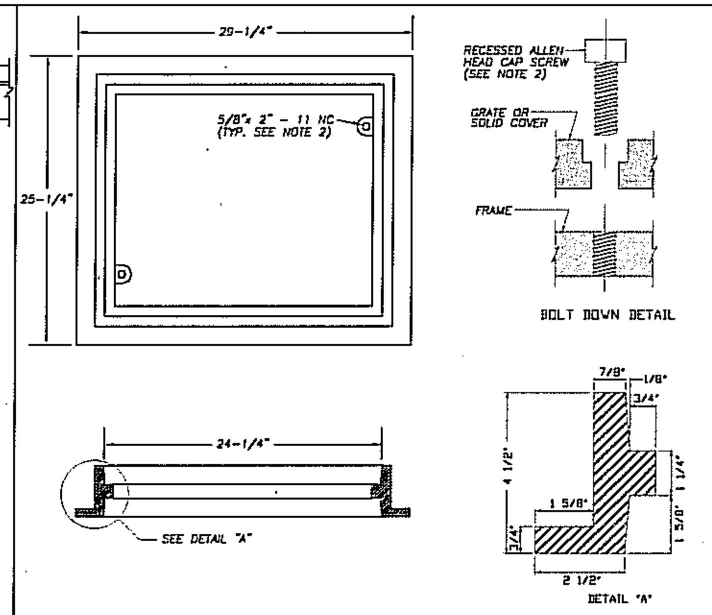

NOTES

1. THIS FRAME IS DESIGNED TO ACCOMODATE 20"x 24" GRATES OR COVERS AS SHOWN ON STD. PLANS D4.3 AND D4.4.

2. WHEN BOLT DOWN GRATES OR COVERS ARE SPECIFIED, PROVIDE TWO HOLES IN THE FRAME THAT ARE VERTICALLY ALIGNED WITH THE GRATE OR COVER SLOTS. TAP EACH HOLE TO ACCEPT A 5/8"x 2" - 11 NC ALLEN HEAD CAP SCREW. LOCATION OF BOLT DOWN HOLES VARIES AMONG DIFFERENT MANUFACTURERS.

3. REFER TO WSDOT STANDARD SPECIFICATION 9-05.15(2) FOR ADDITIONAL REQUIREMENTS.

4. SEE WSDOT STD. SPEC. SECTION 7.05.

Department of Public Works — CLARK COUNTY WASHINGTON — proud past, promising future

REVERSIBLE FRAME FOR CATCH BASIN — APPROVED 01/01/04 — COUNTY ENGINEER — STANDARD PLAN No. D4.2

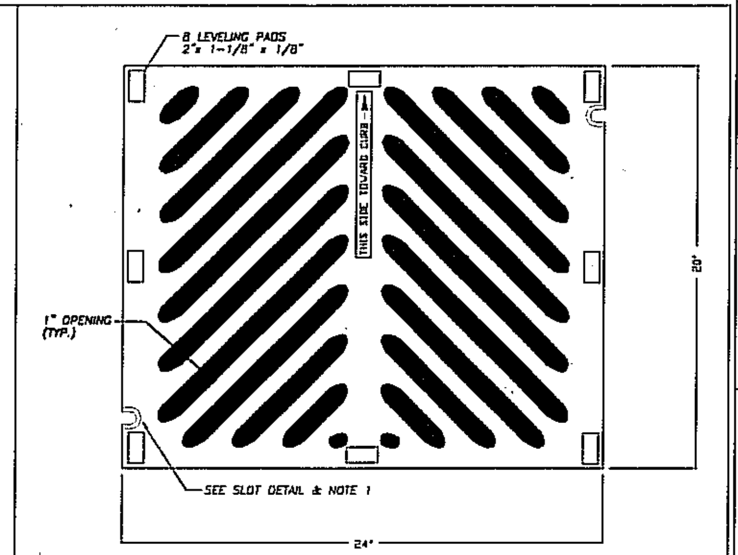

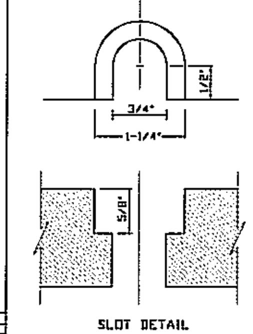

NOTES

1. WELDING NOT PERMITTED

2. USE VANED GRATE PER STD. PLAN D4.4 WHERE LONGITUDINAL SLOPE EXCEEDS 4%.

3. WHEN BOLT DOWN GRATES ARE SPECIFIED, PROVIDE TWO SLOTS IN THE GRATE THAT ARE VERTICALLY ALIGNED WITH THE HOLES IN THE FRAME. LOCATION OF BOLT DOWN SLOTS VARIES AMONG DIFFERENT MANUFACTURERS.

4. REFER TO WSDOT STANDARD SPECIFICATION 9-05.15(2) FOR ADDITIONAL REQUIREMENTS.

5. FOR FRAME DETAIL, SEE STD. PLAN D4.2

6. THE THICKNESS OF THE GRATE SHALL NOT EXCEED 1-5/8".

Department of Public Works — CLARK COUNTY WASHINGTON — proud past, promising future

HERRINGBONE GRATE FOR CATCH BASIN — APPROVED 01/01/04 — COUNTY ENGINEER — STANDARD PLAN No. D4.3

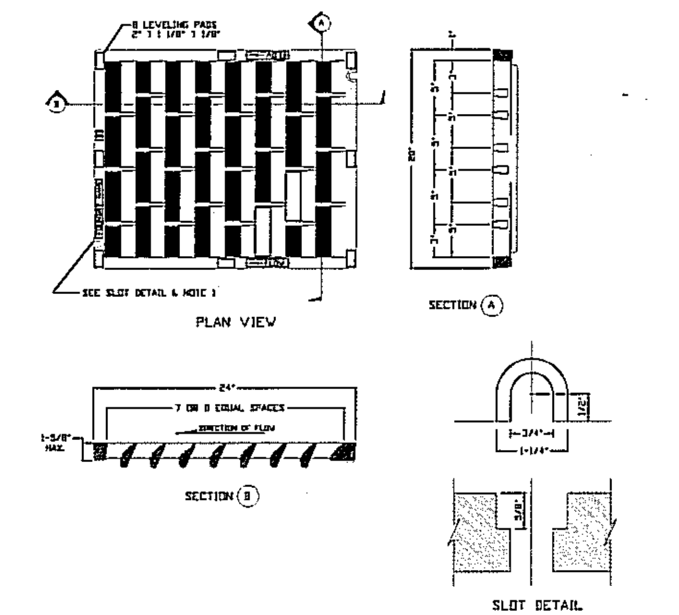

NOTES

1. WELDING NOT PERMITTED

2. USE HERRINGBONE GRATE PER STD. PLAN D4.3 WHERE LONGITUDINAL SLOPE IS LESS THAN 4%.

3. WHEN BOLT DOWN GRATES ARE SPECIFIED, PROVIDE TWO SLOTS IN THE GRATE THAT ARE VERTICALLY ALIGNED WITH THE HOLES IN THE FRAME. LOCATION OF BOLT DOWN SLOTS VARIES AMONG DIFFERENT MANUFACTURERS.

4. REFER TO WSDOT STANDARD SPECIFICATION 9-05.15(2) FOR ADDITIONAL REQUIREMENTS.

5. FOR FRAME DETAIL, SEE STD. PLAN D4.2

Department of Public Works — CLARK COUNTY WASHINGTON — proud past, promising future

VANE GRATE FOR CATCH BASIN — APPROVED 01/01/04 — COUNTY ENGINEER — STANDARD PLAN No. D4.4

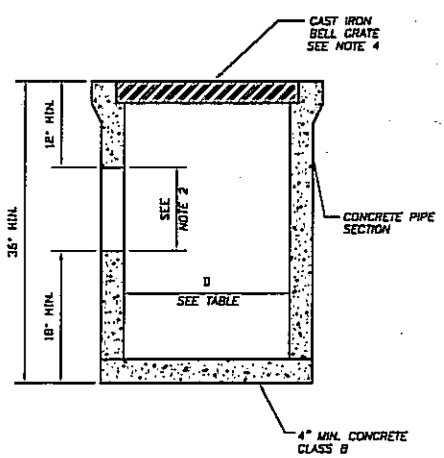

AREA INLET APPROVED FOR USE IN PRIVATE STORM DRAIN SYSTEMS ONLY

1. AREA INLETS TO BE CONSTRUCTED FROM CONCRETE PIPE, IN ACCORDANCE WITH ASTM C 14 UNLESS OTHER WISE SHOWN ON THE PLANS OR NOTED IN THE STANDARD SPECIFICATIONS.

2. CUTOUT HOLE SIZE IS EQUAL TO THE OUTLET PIPE OUTSIDE DIAMETER PLUS AREA INLET WALL THICKNESS. INSTALL TYPE 60A TRAP OR APPROVED EQUAL.

3. CONNECTION TO OUTLET PIPE TO BE MORTARED AND MADE FLUSH WITH INSIDE OF THE AREA INLET WALL.

4. CAST IRON BELL GRATE SHALL MEET THE STRENGH REQUIREMENTS OF FEDERAL SPECIFICATIONS RR-F-621D. THE GRATE SHALL HAVE SLOTS (HOLES) THAT CONSTITUTE 30% OPEN AREA FOR DRAINAGE. INLET BELL SURFACE SHALL BE FINISHED TO ASSURE NON-ROCKING FIT WITH ANY COVER POSITION.

4. AREA INLET TO BE USED FOR PRIVATE STORM SYSTEMS ONLY.

TABLE 1

OUTLET PIPE DIA. Ø	INLET DIA. Ø
6"	12"
8"	18"
12"	24"

Department of Public Works — CLARK COUNTY WASHINGTON — proud past, promising future

STANDARD AREA INLET PRIVATE — APPROVED 01/01/04 — COUNTY ENGINEER — STANDARD PLAN No. D5

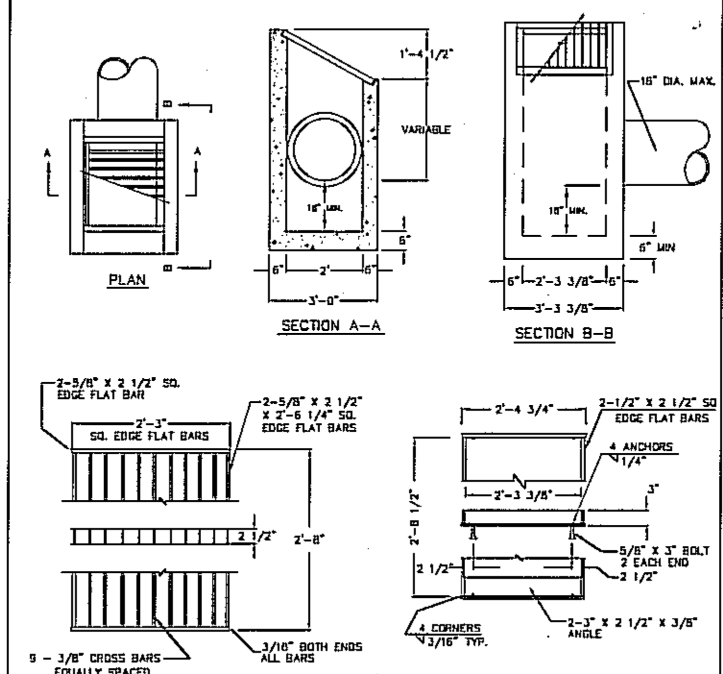

NOTES:

1. DITCH INLET CONSTRUCTION IN ACCORDANCE WITH ASTM C-478
2. CATCH BASIN, FRAME, AND GRATES SHALL BE FLAT BAR STEEL OR APPROVED EQUAL
3. INSIDE FRAME DIMENSIONS: 2'-3 3/8"x 2'-8 1/2"".
4. 3/8" CROSS BARS SHALL BE FLUSH WITH THE GRATE SURFACE AND MAY BE FILLET WELDED, RESISTANCE WELDED OR ELECTROFORGED TO BEARING BARS.

Department of Public Works — CLARK COUNTY WASHINGTON — proud past, promising future

DITCH INLET — APPROVED 01/01/04 — COUNTY ENGINEER — STANDARD PLAN No. D6

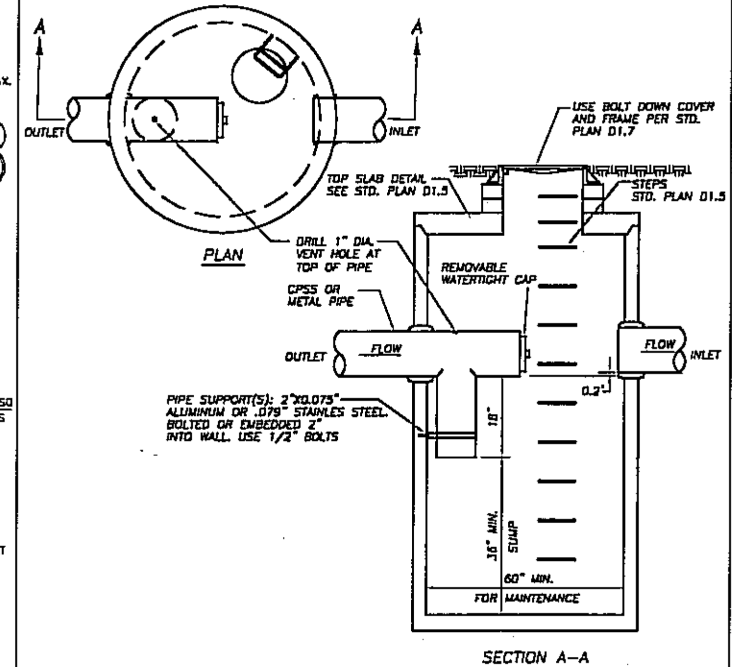

NOTES:

1. EXCEPT AS SHOWN OR NOTED, UNITS SHALL BE CONSTRUCTED IN ACCORDANCE WITH THE REQUIREMENTS FOR WSDOT CATCH BASIN TYPE 2, 60" MINIMUM DIAMETER. SEE WSDOT STANDARD PLAN B-1a
2. FOR DETAILS SHOWING GRADE RING, LADDER, STEPS, HANDHOLDS, AND TOP SLABS, SEE STD. PLAN D1.5

Department of Public Works — CLARK COUNTY WASHINGTON — proud past, promising future

SEDIMENTATION MANHOLE — APPROVED 01/01/04 — COUNTY ENGINEER — STANDARD PLAN No. D7

DESIGN & ENGINEERING DIVISION
DESIGN SECTION

KLINELINE BRIDGE REPLACEMENT
CLARK COUNTY STANDARD DRAINAGE DETAILS

CLARK COUNTY WASHINGTON — proud past, promising future

HOPPER DENNIS JELLISON P.L.L.C. — ENGINEERS · PLANNERS · LANDSCAPE ARCHITECTS

CALL 48 HOURS BEFORE YOU DIG 1-800-553-4344 "It's the Law" NORTHWEST UTILITIES NOTIFICATION CENTER

DESIGNED	
DRAWN	
CRP	341322
HOR.	N/A
VERT.	N/A
DATE	JUN 2006
DWG:	D02
SHEET	20 OF

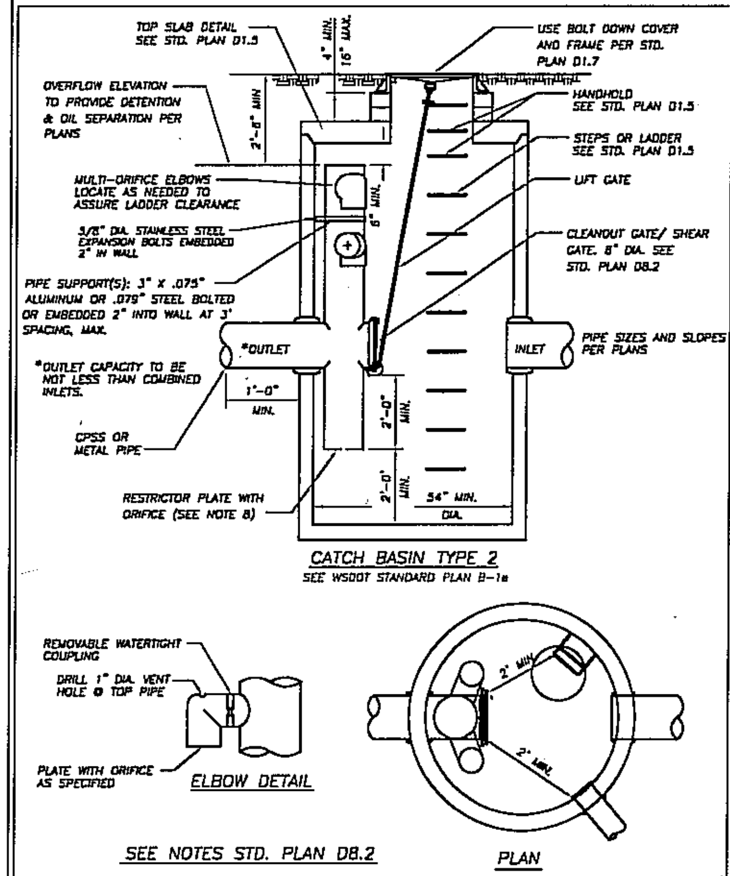

SHEET 1 OF 2

NO.	REVISIONS	DATE	BY

Department of Public Works — CLARK COUNTY WASHINGTON — proud past, promising future

FLOW CONTROL MANHOLE TEE TYPE (CONTINUED ON D8.2)

APPROVED — COUNTY ENGINEER — DATE 01/01/04 — STANDARD PLAN No. D8.1

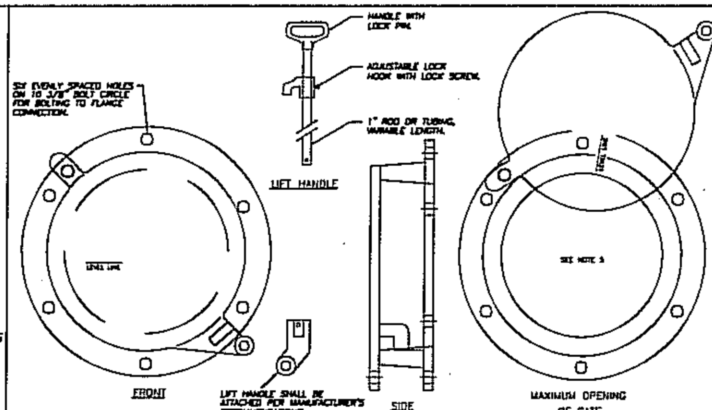

SHEAR GATE NOTES

1. SHEAR GATE SHALL BE ALUMINUM ALLOY PER ASTM B-26-ZG-32a OR CAST IRON ASTM A48 CLASS 30B AS REQUIRED.
2. GATE SHALL BE 8" DIAM. UNLESS OTHERWISE SPECIFIED.
3. GATE SHALL BE JOINED TO TEE SECTION BY BOLTING (THROUGH FLANGE), WELDING, OR OTHER SECURE MEANS.
4. LIFT ROD: AS SPECIFIED BY MFR. WITH HANDLE EXTENDING TO WITHIN ONE FOOT OF COVER AND ADJUSTABLE HOOK LOCK FASTENED TO FRAME OR UPPER HANDHOLD.
5. GATE SHALL NOT OPEN BEYOND THE CLEAR OPENING BY LIMITED HINGE MOVEMENT, STOP TAB, OR SOME OTHER DEVICE.
6. NEOPRENE RUBBER GASKET REQUIRED BETWEEN RISER MOUNTING FLANGE AND GATE FLANGE.
7. MATING SURFACES OF LID AND BODY TO BE MACHINED FOR PROPER FIT.
8. FLANGE MOUNTING BOLTS SHALL BE 3/8" DIAM. STAINLESS STEEL.
9. ALTERNATE CLEANOUT/SHEAR GATES TO THE DESIGN SHOWN ARE ACCEPTABLE, PROVIDED THEY MEET THE MATERIAL SPECIFICATIONS ABOVE AND HAVE A SIX BOLTS, 10-3/8" BOLT CIRCLE FOR BOLTING TO THE FLANGE CONNECTION.

FLOW CONTROL DEVICE NOTES

1. EXCEPT AS SHOWN OR NOTED, UNITS SHALL BE CONSTRUCTED IN ACCORDANCE WITH THE REQUIREMENTS FOR WSDOT CATCH BASIN TYPE 2, 54" MIN. DIA.
2. FOR DETAILS SHOWING GRADE RING, LADDER, STEPS, HANDHOLDS, AND TOP SLABS, SEE STD. PLAN D1.5.
3. THE RESTRICTOR/SEPARATOR AND PIPE SUPPORTS SHALL BE OF THE SAME MATERIAL AND SHALL BE FABRICATED FROM 0.060" ALUMINUM OR 0.064" ALUMINIZED STEEL OR 0.064" GALVANIZED STEEL PIPE IN ACCORDANCE WITH AASHTO M 36, M 196, M 197 AND M 274. GALVANIZED STEEL SHALL HAVE TREATMENT 1.
4. OUTLET SHALL BE CONNECTED TO CULVERT OR SEWER PIPE WITH A STANDARD COUPLING BAND FOR CORRUGATED METAL PIPE OR GROUTED INTO THE BELL OF CONCRETE PIPE.
5. THE VERTICAL RISER STEM OF THE RESTRICTOR/SEPARATOR SHALL BE THE SAME DIAMETER AS THE HORIZONTAL OUTLET PIPE WITH AN 8" MIN. SIZE.
6. FRAME AND LATTER, OR STEPS TO BE OFFSET SO THAT:
   A. CLEANOUT GATE IS VISIBLE FROM TOP
   B. CLIMB-DOWN SPACE IS CLEAR OF RISER AND CLEANOUT GATE.
   C. FRAME IS CLEAR OF CURB (IF ANY EXISTS).
7. MULTI-ORIFICE ELBOWS MAY BE LOCATED AS SHOWN OR ALL ON ONE SIDE OF RISER TO ASSURE LADDER CLEARANCE. SIZE OF ELBOWS TO BE DETERMINED BY ENGINEER.
8. RESTRICTOR PLATE WITH ORIFICE AS SPECIFIED IN THE PLANS. OMIT PLATE IF ONLY FOR OIL POLLUTION CONTROL. SPECIFIED OPENING TO BE CUT ROUND AND SMOOTH EDGED.

SHEET 2 OF 2

NO.	REVISIONS	DATE	BY

Department of Public Works — CLARK COUNTY WASHINGTON — proud past, promising future

FLOW CONTROL MANHOLE, TEE TYPE (CONTINUED) SHEAR GATE DETAIL & NOTES

APPROVED — COUNTY ENGINEER — DATE 01/01/04 — STANDARD PLAN No. D8.2

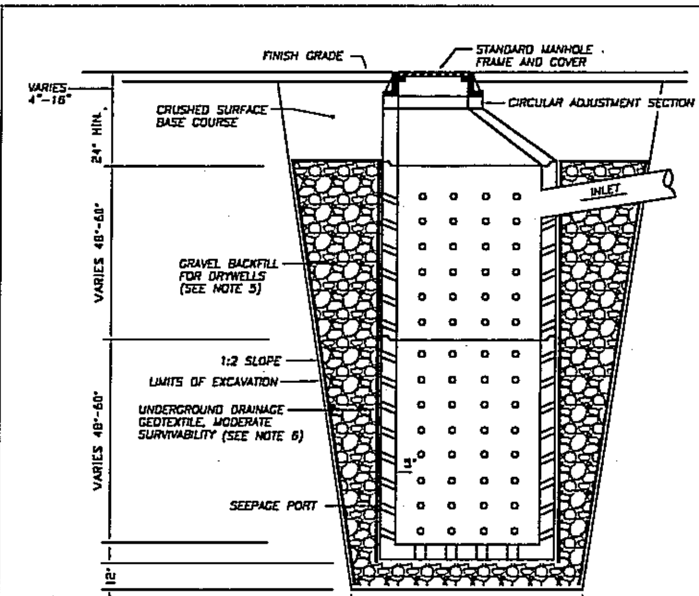

NOTES:

1. ALL PRECAST SECTIONS SHALL CONFORM TO REQUIREMENTS OF A.S.T.M. C478
2. PRECAST CONE SECTIONS MAY BE ECCENTRIC OR CONCENTRIC.
3. ALL PIPING TO AND FROM PRECAST DRYWELLS SHALL HAVE AT LEAST 8" OF CRUSHED ROCK COVER CONTINUOUSLY AROUND PIPE WHERE DRAIN ROCK WOULD OTHERWISE BE IN CONTACT WITH PIPE.
4. PERFORATIONS SHALL BE HORIZONTAL ROWS OF (14) 2-1/4" SQUARE OR (14) 2-3/8" ROUND HOLES, EQUALLY SPACED. ROWS SHALL BE SPACED 6-1/2" CENTER TO CENTER.
5. GRAVEL BACKFILL FOR DRYWELLS PER WDOT SPECIFICATION 9-03.12(5).
6. UNDERGROUND DRAINAGE GEOTEXTILE, MODERATE SURVIVABILITY. SEE WDOT SPECIFICATION 9-33.
7. TYPICAL DRYWELL DEPTH IS 13'

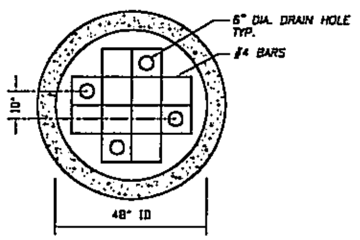

NO.	REVISIONS	DATE	BY

Department of Public Works — CLARK COUNTY WASHINGTON — proud past, promising future

PRECAST DRYWELL

APPROVED — COUNTY ENGINEER — DATE 01/01/04 — STANDARD PLAN No. D10

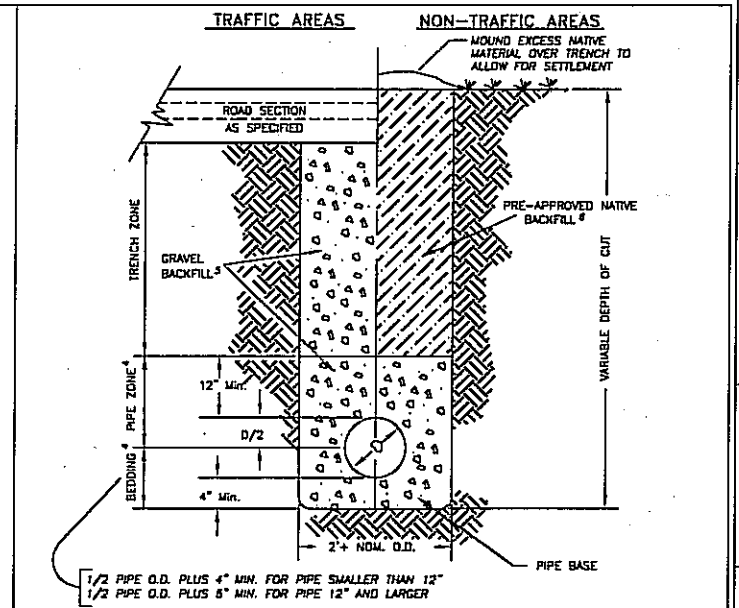

NOTES

1. FOR INSTALLATION OF DRAINAGE PIPE IN NEW DEVELOPMENT.
2. GENERAL PIPE INSTALLATION REQUIREMENTS SHALL BE PER SECTION 7-08 WSDOT SPECS.
3. TRENCH BACK FILL SHALL CONFORM TO CCC 40.350.030(C)(4)(e).
4. PIPE ZONE AND BEDDING MATERIAL SHALL CONFORM TO SECTION 9-03.12(3) WSDOT SPECS.
5. GRAVEL BACKFILL PER WSDOT SPECIFICATION SECTION 9-03.19, AND COMPACTED TO 95% MAX. DENSITY (AASHTO T-99). NATIVE SOILS MAY BE USED UPON APPROVAL BY REVIEWING AUTHORITY IF TESTING SHOWS MATERIAL IS CLASSIFIED AS A-1 OR A-3 BY AASHTO.
6. OUTSIDE THE ROADWAY PRISM, SUITABLE NATIVE BACKFILL SHALL BE COMPACTED TO 90% MAX. DENSITY (AASHTO T-99).
7. ALL COMPACTION SHALL BE IN ACCORDANCE WITH THE COMPACTION CONTROL TEST OF SECTION 2-03.3(14)D.

NO.	REVISIONS	DATE	BY

Department of Public Works — CLARK COUNTY WASHINGTON — proud past, promising future

PIPE BEDDING AND BACKFILL DETAIL

APPROVED — COUNTY ENGINEER — DATE 01/01/04 — STANDARD PLAN No. D14

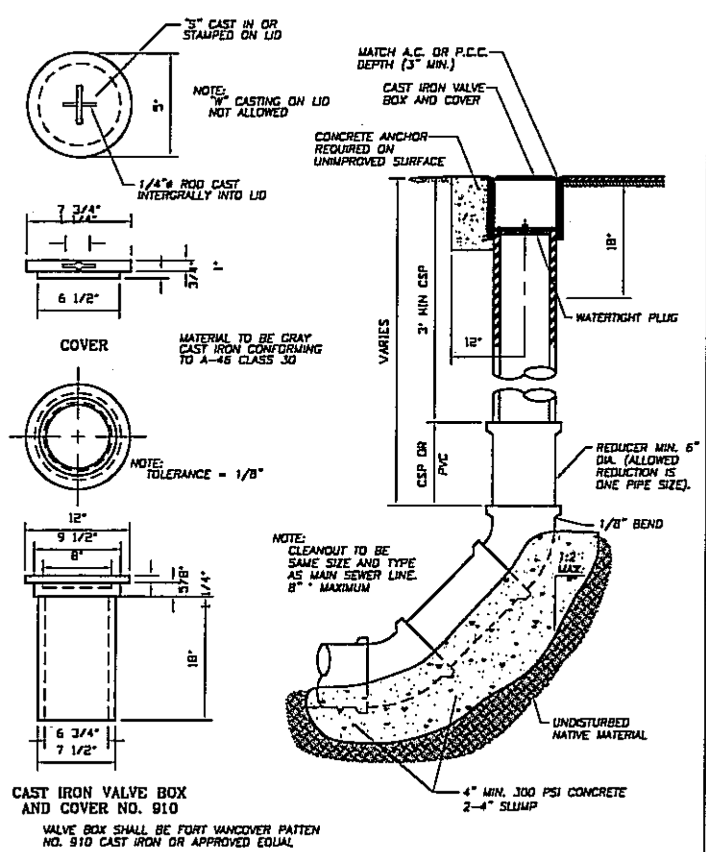

CAST IRON VALVE BOX AND COVER NO. 910

VALVE BOX SHALL BE FORT VANCOVER PATTEN NO. 910 CAST IRON OR APPROVED EQUAL

NO.	REVISIONS	DATE	BY

Department of Public Works — CLARK COUNTY WASHINGTON — proud past, promising future

STANDARD CLEANOUT

APPROVED — COUNTY ENGINEER — DATE 01/01/04 — STANDARD PLAN No. D15

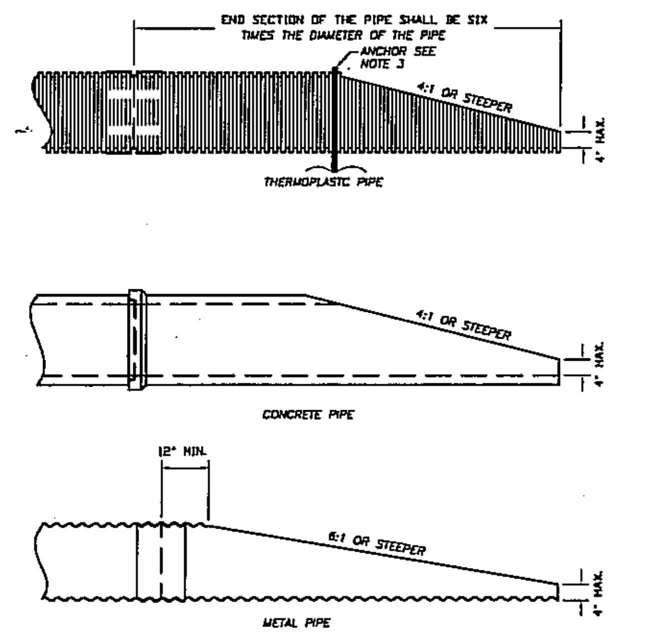

NOTES:

1. THE CULVERT ENDS SHALL BE BEVELED TO MATCH THE EMBANKMENT OR DITCH SLOPE, WITHOUT EXCEEDING THE LIMITS SHOWN ON THE PLAN.
2. FIELD CUT OF CULVERT ENDS IS PERMITTED, WHEN APPROVED BY THE ENGINEER. ALL FIELD CUT PIPE CULVERTS SHALL BE TREATED WITH TREATMENT SHOWN IN THE STANDARD SPECIFICATION OR GENERAL SPECIAL PROVISIONS.
3. THE END OF THERMOPLASTIC PIPE SHALL BE ANCHORED. SEE STD. PLAN D22
4. FOR PIPES 18" OR LARGER, TRASH SCREEN REQUIRED. SEE STD. PLAN D25

NO.	REVISIONS	DATE	BY

Department of Public Works — CLARK COUNTY WASHINGTON — proud past, promising future

BEVELED END SECTION

APPROVED — COUNTY ENGINEER — DATE 01/01/04 — STANDARD PLAN No. D24

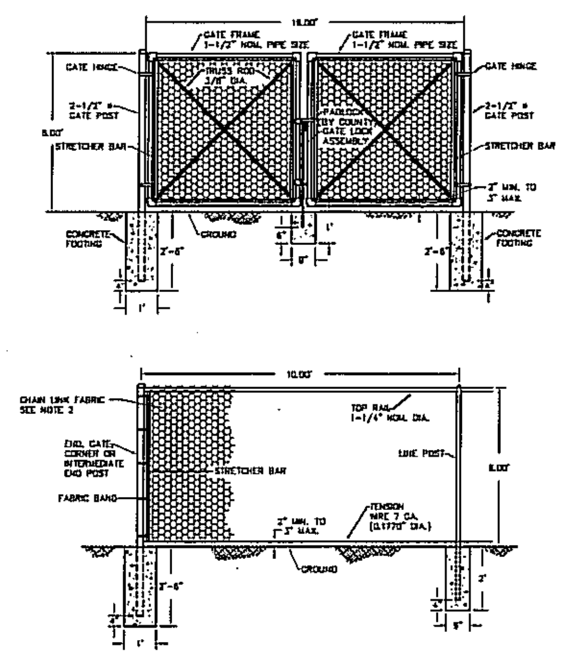

NOTES:

1. ALL MATERIAL AND WORKMANSHIP SHALL BE IN ACCORDANCE WITH THE CURRENT STATE OF WASHINGTON STANDARD SPECIFICATIONS FOR ROAD, BRIDGE, AND MUNICIPAL CONSTRUCTION
2. CHAIN LINK FENCE FABRIC TO MEET OR EXCEED REQUIREMENTS OF WSDOT SPECIFICATION 9.16.1(7) FOR TYPE 1 FENCE (9 GA) 2" DIAMOND.

NO.	REVISIONS	DATE	BY

Department of Public Works — CLARK COUNTY WASHINGTON — proud past, promising future

STORMWATER FACILITY CHAIN LINK FENCE

APPROVED — COUNTY ENGINEER — DATE 01/01/04 — STANDARD PLAN No. D26

DESIGNED	
DRAWN	
CRP	341322
HOR.	N/A
VERT.	N/A
DATE	JUN 2006
DWG:	D03
SHEET	21 OF

CALL 48 HOURS BEFORE YOU DIG 1-800-553-4344 "It's the Law" NORTHWEST UTILITIES NOTIFICATION CENTER

HOPPER DENNIS JELLISON P.L.L.C.
ENGINEERS · PLANNERS LANDSCAPE ARCHITECTS
314 W. 15th Street Vancouver, WA 98660-2927 Internet: www.hdjengineers.com
(360) 695-3488 (503) 974-4003 FAX (360) 695-8767

DESIGN & ENGINEERING DIVISION DESIGN SECTION

KLINELINE BRIDGE REPLACEMENT CLARK COUNTY STANDARD DRAINAGE DETAILS

CLARK COUNTY WASHINGTON — proud past, promising future

STANDARD NOTES FOR EROSION CONTROL PLAN

1. The Contractor shall install and maintain BMP's as shown and perform all actions necessary to prevent erosion, and control sediment from leaving the construction site. Site Contractor shall comply with Clark County Code Chapter 40.380.050.

2. All erosion control measures shall be in-place and in working condition prior to disturbing and exposing any soil surfaces (i.e. silt fence, construction entrance, sedimentation barriers, sedimentation traps).

3. All erosion prevention and control BMP's shall be maintained and repaired as needed to insure continued performance of their intended function. Needed repairs shall be made as soon as practicable. They are to remain in place and operational during all phases of construction. Construction activities shall not continue or resume until repairs to erosion control facilities are made and the facilities are functional. Any sediment leaving the site or discharging to a sensitive area shall be stopped and controlled immediately. Contaminated areas shall be cleaned and restored.

4. Clearing limits and work area limits shall be delineated and marked. Do not disturb more area than needed for construction requirements.

5. All sensitive or critical areas (wetlands, steep slopes, natural waterways), and buffers shall all be clearly delineated and clearly marked, and protected from sediment deposition.
6. Sediment laden runoff shall be prevented from entering all existing storm water catch basins and inlets affected by construction.

7. No exposed, bare soils shall remain unstabilized for more than two days during the period October 1 thru April 30 or for more than seven days during the period of May 1 through September 30. All disturbed soil surfaces shall be stabilized by a suitable application of "Best Management Practices".

8. Where feasible, no more than 500 feet of trench shall be open at one time. Excavated material shall be placed on the up-hill side of trenches provided it does not conflict with safety requirements.

9. Dewatering devices shall discharge into a sediment trap or sediment pond. No discharge shall be made to a paved street or stormwater collection system without first removing sediment.

10. Cut and fill slopes shall be constructed in a manner that will minimize erosion. Erosion shall be controlled and prevented by such measures as roughening the surface, installation of interceptor ditches, terracing, covering with matting, mulch or plastic sheeting. Runoff shall be prevented from entering a slope and from undercutting the base of slopes.

11. Any soil or debris transported onto roadways and sidewalks shall be removed. Deposits shall be completely removed by shoveling and/or sweeping. Washing shall not be utilized unless specifically approved in writing by the County.

12. All permanent infiltration systems shall be isolated and protected from sediment laden runoff entering to avoid risk of reducing the ability of the systems to infiltrate. Isolation and protection shall not be removed until the drainage area tributary to the system is completely stabilized.

CONTINUED ON SHEET 2

NO.	REVISIONS	DATE	BY

DWG ECN1.DWG

Department of Public Works — CLARK COUNTY WASHINGTON — proud past, promising future

STANDARD NOTES FOR EROSION CONTOL PLAN — APPROVED — COUNTY ENGINEER — 01/01/04 DATE — STANDARD ECN1

STANDARD NOTES FOR EROSION CONTROL PLAN (CONTINUED)

13. All conveyance channels, both temporary and permanent shall be stabilized to prevent erosion of the channel. Stabilization shall extend to areas at outlets and downstream reaches vulnerable to erosion resulting from flow discharging from the channel.

14. If BMP's shown are utilized but are insufficient to prevent sediment from reaching water bodies, adjacent properties, or public rights-of-way; additional BMP's shall be implemented immediately to prevent further encroachment of sediment.

15. Stabilized areas shall be provided for employee parking and storage of construction materials. Erodeable stockpiles of earthen materials, such as topsoil, silty and clayey soils; and landscape materials, shall be covered when not being incorporated in the work. Erosion control BMP's shall be utilized as necessary to prevent sediment laden runoff from leaving or sediment being transported from these areas from vehicle activity.

16. All pollutants other than sediment that occur during construction shall be handled and disposed of in a manner that does not cause contamination of storm water.

17. The Contractor shall keep an inspection log of the condition of the erosion control facilities. Erosion control facilities shall be inspected at least weekly and after each rainfall. The inspection log shall be kept at the project site at a designated location and shall be available for review by the County. An individual that has successfully completed the County's Erosion Control Certification course shall perform inspections and maintain the log.

18. All temporary BMP's shall be removed within 30 days after final site stabilization is achieved. Trapped sediment shall be deposited and stabilized on site. Areas disturbed resulting from removal shall be permanently stabilized.

19. Construction shall not be considered complete and acceptable until all disturbed soil surfaces have been protected from erosion with permanent landscaping, covering with impervious surfaces, restored to original undisturbed condition or permanently stabilized.

20. Vegetated stabilization and landscaping shall be fertilized, watered and maintained to insure that growth of vegetation is established and sustained.

21. During dry weather construction periods the contractor shall provide project-specific dust control measures that may include: Seeding, Mulching, Matting, Water, Tackifier, or Chemical Soil Stabilizers. The contractor shall maintain the dust control measures through dry weather periods until all disturbed areas have been stabilized. Immediately re-stabilize areas disturbed by contractor's operations or other activities (wind, water, vandalism, etc.).

22. Entry onto the construction site shall be restricted to a single approved entrance as shown on the plan.

23. Maintenance and repair of heavy equipment and vehicles which involve potential contaminants (oil,solvents,hydraulic fluid, etc.) must be conducted in a manner which prevents contamination of soils, surface water and ground water. Tarps, drip pans, or other appropriate measures shall be used as necessary.

24. Stripping, topsoil, and unsuitable material stockpiles shall be hydroseeded with "regreen wheat x wheat grass hybrid" by Hobbs and Hobkins (or approved equal). Maintenance of stockpile areas and reapplication of hydroseed covering shall be required if bare soil is present. During winter and wet weather conditions, stockpiles shall be covered with plastic sheeting per detail E-16.

SHEET 2 OF 2

NO.	REVISIONS	DATE	BY

DWG ECN.DWG

Department of Public Works — CLARK COUNTY WASHINGTON — proud past, promising future

STANDARD NOTES (CONTINUED) FOR EROSION CONTOL PLAN — APPROVED — COUNTY ENGINEER — 01/01/04 DATE — STANDARD ECN2

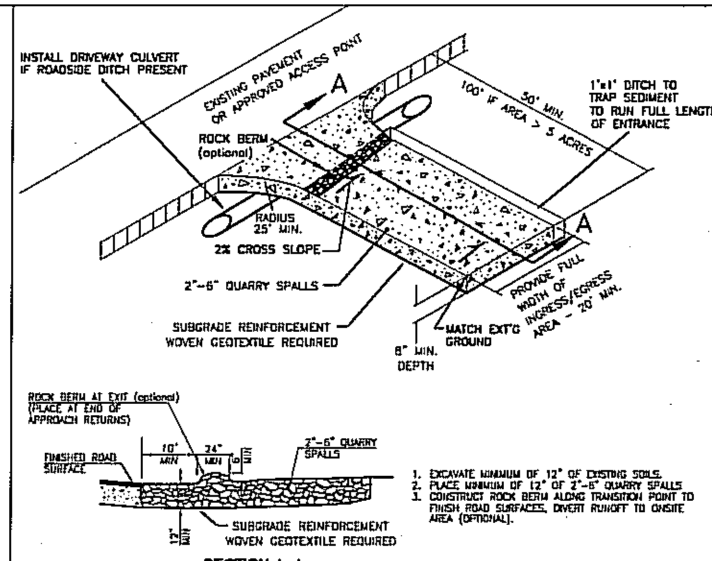

SECTION A-A

NOTES:

1. FOR DEVELOPMENT PROJECTS REVIEWED BY ENGINEERING SERVICES. NOT FOR USE WITH SINGLE FAMILY OR DUPLEX RESIDENTIAL BUILDING PERMITS. SEE BUILDING DEPT. FOR GRAVEL CONSTRUCTION ENTRANCE PLAN.
2. INSTALL WOVEN GEOTEXTILE FABRIC TO PREVENT SUB-SOIL PUMPING.
3. VEHICLE WASHDOWN AREA, IF REQUIRED, IS TO BE INSTALLED AND USED TO REMOVE SEDIMENT FROM VEHICLES THAT ARE ABOUT TO ENTER AN ESTABLISHED ROAD.
4. WASHDOWN AREA TO BE MADE UP OF CLEAN 2"- 6" QUARRY SPALLS, 1" DEEP (MIN) OVER WOVEN GEOTEXTILE FABRIC. WASHDOWN AREA TO BE FULL WIDTH OF ENTRANCE AND 50' (MIN.), AND 100' IF EXPOSED SOIL IS OVER 5 ACRES.
5. AT TIME OF PRECONSTRUCTION MEETING, THE COUNTY INSPECTOR MAY REQUIRE THE ENTRANCE TO BE PAVED TO THE EDGE OF THE RIGHT-OF-WAY PRIOR TO THE INSTALLATION OF A WASHDOWN ENTRANCE TO AVOID DAMAGE TO THE EXISTING ROADWAY.
6. THE RESPONSIBLE EROSION CONTROL INDIVIDUAL IS TO ENSURE THAT ALL VEHICLES USE THIS ENTRANCE AND ARE TO BE INSPECTED AND CLEANED OF SOILS BEFORE LEAVING PROJECT, AND THAT THE ENTRANCE IS TO BE KEPT CLEAN AT ALL TIMES.

NO.	REVISIONS	DATE	BY

DWG E-1.DWG

Department of Public Works — CLARK COUNTY WASHINGTON — proud past, promising future

STANDARD CONSTRUCTION ENTRANCE — APPROVED — COUNTY ENGINEER — 01/01/04 DATE — STANDARD E-1

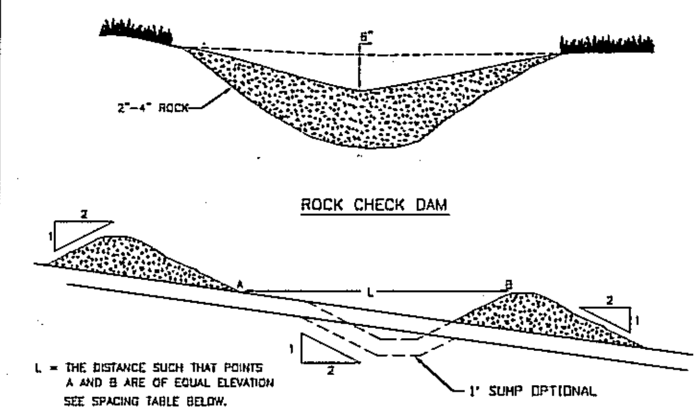

L = THE DISTANCE SUCH THAT POINTS A AND B ARE OF EQUAL ELEVATION
SEE SPACING TABLE BELOW.

SPACING BETWEEN CHECK DAMS

CHECK DAM NOTES:

1. CHECK DAMS ARE CONSTRUCTED ACROSS A SWALE OR DITCH TO REDUCE VELOCITIES OF CONCENTRATED FLOWS, THEREBY REDUCING EROSION AND ALLOWING A SIGNIFICANT AMOUNT OF SUSPENDED SEDIMENT TO SETTLE OUT.
2. CHECK DAMS SHALL BE USED IN TEMPORARY OR PERMANENT CHANNELS THAT DRAIN 10 ACRES OR LESS, ARE NOT YET VEGETATED, AND WHEN INSTALLING CHANNEL LINING IS NOT FEASIBLE.
3. USE TYPICAL ROCK SIZE OF 2-4 INCH. PLACE ROCK BY HAND OR BY MECHANICAL MEANS RATHER THAN DUMPING THE ROCK. BRIDGE ENTIRE DITCH OR SWALE WIDTH AND ENSURE THE CENTER OF THE DAM IS 6" LOWER THAN THE OUTER ENDS. FOR HIGHER VELOCITY FLOWS: ±5 FPS USE 6"-12" RIPRAP, AND HAND PLACE LARGER ROCK ON UPSTREAM SIDE OF DAM.
4. REMOVE CHECK DAMS FROM GRASS-LINED DITCHES AND SWALES ONCE THE GRASS IS ESTABLISHED. SEED, MULCH OR MAT THE AREA WHERE THE CHECK DAMS WERE, IMMEDIATELY FOLLOWING REMOVAL.
5. INSPECT ONCE PER WEEK ON ACTIVE SITES, ONCE EVERY TWO WEEKS ON INACTIVE SITES, AND WITHIN 24 HOURS FOLLOWING A 0.5 INCH RAIN EVENT. REMOVE SEDIMENT ONCE IT REACHES ONE-THIRD THE DEPTH OF THE ROCK WEIR. REPLACE ROCK WEIR WHEN FILTERING CAPACITY IS REDUCED BY ONE-HALF.
6. SPACING TABLE FOR CHECK DAMS:

DITCH GRADE	MINIMUM WEIR DEPTH		
	6 INCH	12 INCH	18 INCH
6%	**	L=16 ft O.C.	L=26 ft O.C.
5%	**	L= 20 ft	L= 30 ft
4%	**	L= 26 ft	L= 40 ft
3%	15 ft	L= 33 ft	L= 50 ft
2%	25 ft	L= 50 ft	L= 80 ft

**NOT ALLOWED

NO.	REVISIONS	DATE	BY

DWG E-2

Department of Public Works — CLARK COUNTY WASHINGTON — proud past, promising future

ROCK CHECK DAM — APPROVED — COUNTY ENGINEER — 01/01/04 DATE — STANDARD E-2

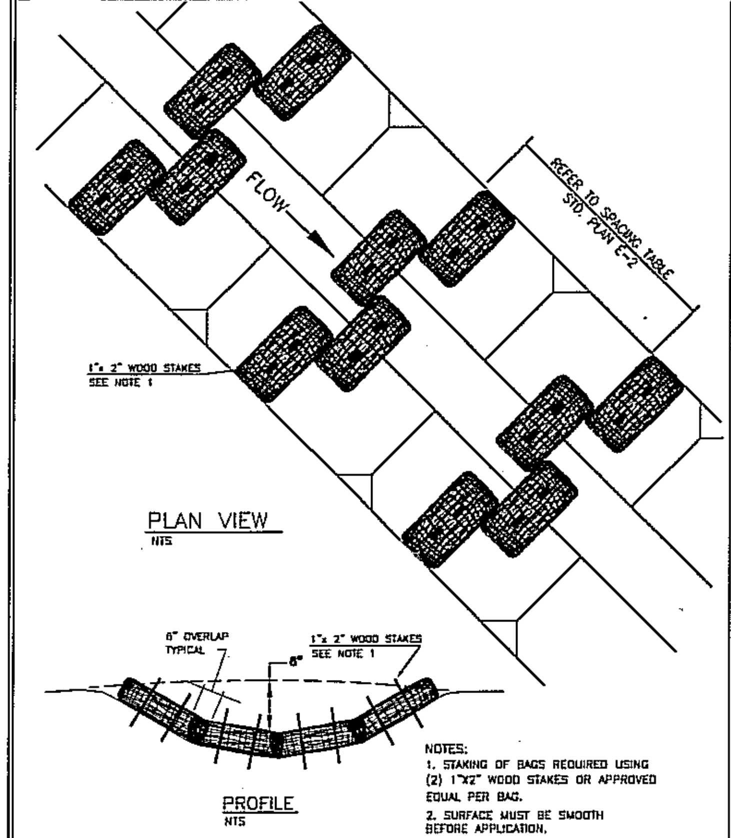

PLAN VIEW
NTS

PROFILE
NTS

NOTES:
1. STAKING OF BAGS REQUIRED USING (2) 1"x2" WOOD STAKES OR APPROVED EQUAL PER BAG.
2. SURFACE MUST BE SMOOTH BEFORE APPLICATION.
3. SEE CHECK DAM NOTES STD. PLAN E-2

NO.	REVISIONS	DATE	BY

DWG E-2a

Department of Public Works — CLARK COUNTY WASHINGTON — proud past, promising future

BIO-FILTER BAG CHECK DAM — APPROVED — COUNTY ENGINEER — 01/01/04 DATE — STANDARD E-2a

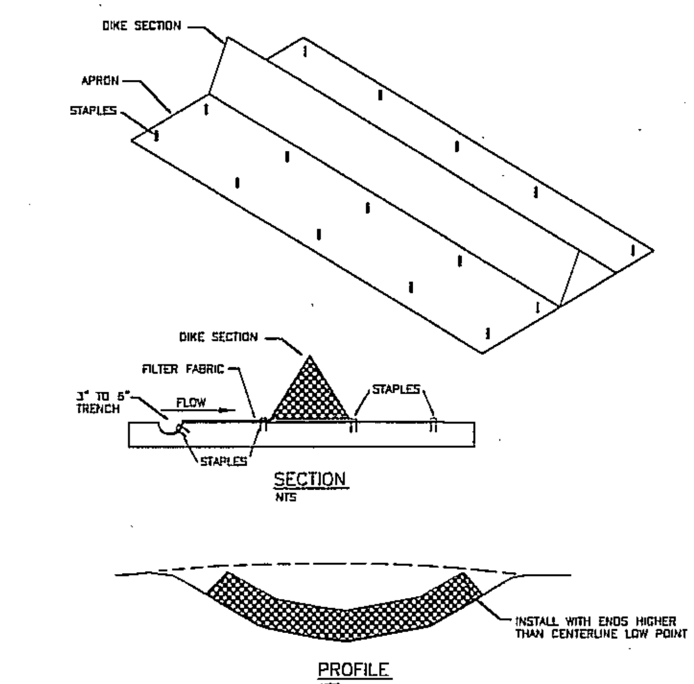

SECTION
NTS

PROFILE
NTS

NOTES:

1. TO BE INSTALLED PER MANUFACTURES SPECIFICATION. SEE WSDOT SPECIFICATION 8-01.3(5)A.
2. CAN BE USED FOR DITCH CHECK DAMS, DIVERSION DIKES, DROP INLET PROTECTION, TEMPORARY DITCH LINER, AND CAN REPLACE SILT FENCE IN SOME APPLICATION. TM
3. PRODUCT IS MANUFACTURED BY TRIANGULAR SILT DIKE.
4. SEE SPACING TABLE AND CHECK DAM NOTES ON STD. PLAN E-2.

NO.	REVISIONS	DATE	BY

DWG E-2b

Department of Public Works — CLARK COUNTY WASHINGTON — proud past, promising future

GEOTEXTILE-ENCASED CHECK DAM — APPROVED — COUNTY ENGINEER — 01/01/04 DATE — STANDARD E-2b

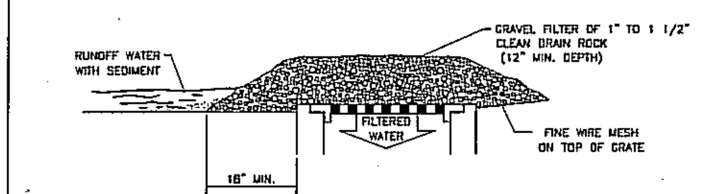

GRAVEL & WIRE MESH

NOT TO BE USED IN TRAVELED WAY IF IT MAY RESULT IN A TRAFFIC HAZARD

INLET PROTECTION NOTES:

1. INLET PROTECTION IS INTENDED TO PREVENT COARSE SEDIMENT FROM ENTERING STORM DRAINAGE SYSTEMS BY FILTERING RUNOFF AND RETAINING SEDIMENT BEFORE IT REACHES A DRAINAGE OR STORM SEWER SYSTEM.
2. PLACE INLET PROTECTION IN AREAS WHERE WATER CAN POND, AND WHERE PONDING WILL NOT HAVE ADVERSE IMPACTS.
3. INLET PROTECTION MUST ALLOW FOR OVERFLOW IN A SEVERE STORM EVENT.
4. INLET PROTECTION TYPES INCLUDE: TYPE 1 – GRAVEL AND WIRE MESH
TYPE 2 – MASONRY AND ROCK
TYPE 3 – SEDIMENT FENCE
TYPE 4 – BIOFILTER BAGS
TYPE 5 – CATCH BASIN INSERT
5. INSPECT ONCE PER WEEK ON ACTIVE SITES, ONCE EVERY TWO WEEKS ON INACTIVE SITES, AND WITHIN 24 HOURS FOLLOWING A 0.5 INCH RAIN EVENT.
6. CLEAN INLET PROTECTION DURING AND AFTER EACH SIGNIFICANT STORM AND REMOVE SEDIMENT FROM BEHIND STRUCTURE AFTER EVERY STORM.
7. IF ROCK BECOMES CLOGGED WITH SEDIMENT, IT MUST BE CAREFULLY REMOVED FROM THE INLET AND EITHER CLEANED OR REPLACED.
8. ASSESS THE IMPACT OF ALLOWING WATER TO POND AT THE INLET AND PROVIDE AN OVERFLOW WEIR OR SOME OTHER TYPE OF RELIEF AS NEEDED.
9. CONSIDER THE EFFECT OF PLACING OBSTRUCTIONS AT INLETS ON GRADE MAY HAVE ON THEIR EFFICIENCY.
10. USE MECHANICAL MEANS TO REMOVE SEDIMENT DEPOSITS (SHOVEL, BROOM, SWEEPER/VACTOR UNIT).
11. REMOVE SEDIMENT ACCUMULATED ON OR AROUND THE PROTECTION AS NEEDED TO MAINTAIN INTENDED FUNCTION.
12. REPAIR OR REPLACE MATERIALS AS NEEDED TO ENSURE PROPER FUNCTION.

NO.	REVISIONS	DATE	BY

DWG E-3.DWG

Department of Public Works — CLARK COUNTY WASHINGTON — proud past, promising future

INLET PROTECTION TYPE 1 GRAVEL AND WIRE MESH — APPROVED — COUNTY ENGINEER — 01/01/04 DATE — STANDARD E-3

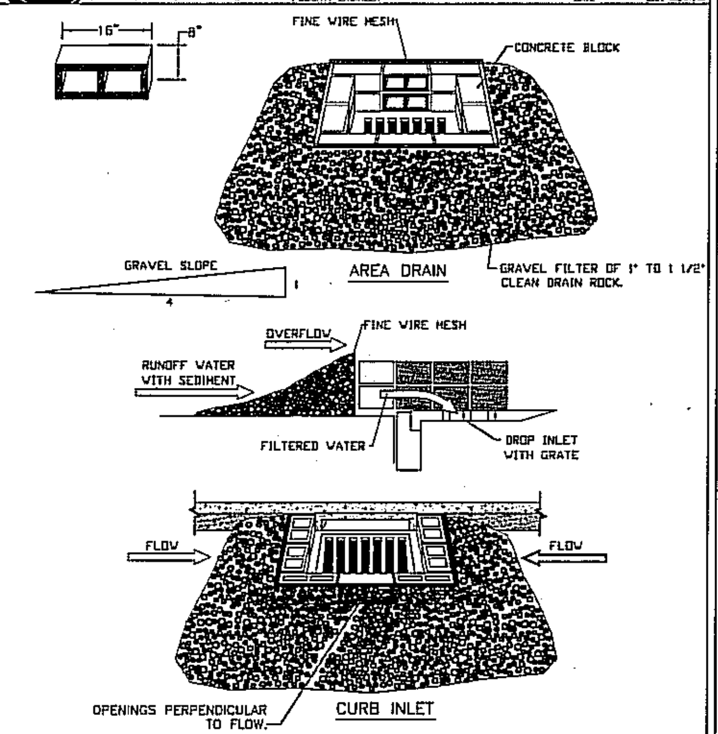

AREA DRAIN

CURB INLET

BLOCK AND GRAVEL INLET BARRIERS

NOT TO BE USED IN TRAVELED WAY IF IT MAY RESULT IN A TRAFFIC HAZARD

NOTE:
1. BLOCKS SHALL BE STACKED WITH THE OPENINGS ON THE TOP AND BOTTOM EXCEPT FOR THE CENTER BLOCKS. CENTER BLOCKS WILL HAVE OPENINGS PERPENDICULAR TO FLOW.
1. SEE INLET PROTECTION NOTES STD. PLAN E-3

NO.	REVISIONS	DATE	BY

DWG E-3a.DWG

Department of Public Works — CLARK COUNTY WASHINGTON — proud past, promising future

INLET PROTECTION TYPE 2 MASONRY AND ROCK — APPROVED — COUNTY ENGINEER — 01/01/04 DATE — STANDARD E-3a

DESIGNED	
DRAWN	
CRP	341322
HOR.	N/A
VERT.	N/A
DATE	JUN 2006
DWG:	D04
SHEET	22 OF

CALL 48 HOURS BEFORE YOU DIG
1-800-553-4344
"It's the Law"
NORTHWEST UTILITIES NOTIFICATION CENTER

HOPPER DENNIS JELLISON PLLC
ENGINEERS · PLANNERS LANDSCAPE ARCHITECTS

DESIGN & ENGINEERING DIVISION
DESIGN SECTION

KLINELINE BRIDGE REPLACEMENT
CLARK COUNTY
STANDARD EROSION CONTROL DETAILS

proud past, promising future
CLARK COUNTY WASHINGTON

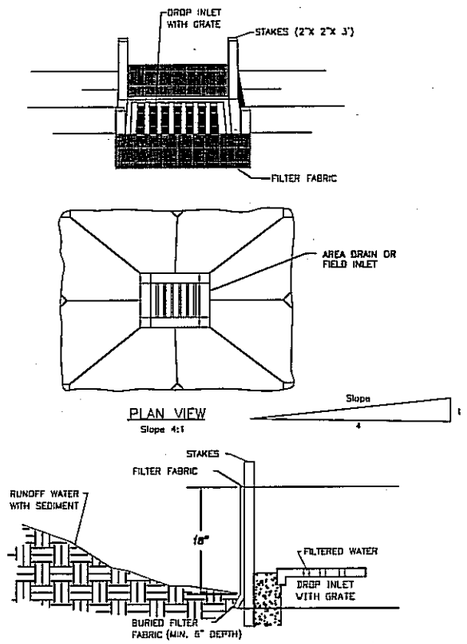

NOTE:

1. SEE INLET PROTECTION NOTES STD. PLAN E-3

NO.	REVISIONS	DATE	BY

Department of Public Works
CLARK COUNTY WASHINGTON
proud past, promising future

INLET PROTECTION TYPE 3 SEDIMENT FENCE

APPROVED — PETER CAPELLI, COUNTY ENGINEER — 01/01/04 DATE

STANDARD PLAN No. E-3b

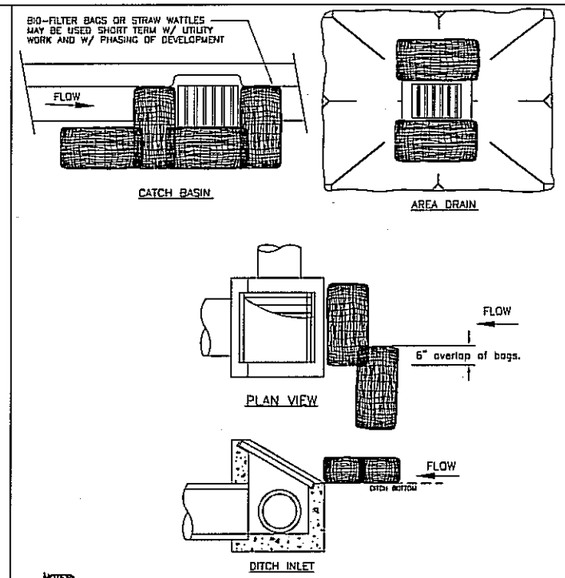

NOTES:

1. ADDITIONAL MEASURES MUST BE CONSIDERED DEPENDING ON SOIL TYPE.
2. BIO-FILTER BAGS SHOULD BE STAKED WHERE APPLICABLE USING (2) 1"x2" WOODEN STAKES OR APPROVED EQUAL PER BAG.
3. STRAW WATTLES MUST BE STABILIZED BY ATTACHING WIRE CLIPS TO THE CATCH BASIN PER MANUFACTURES SPECIFICATIONS.
4. INLET PROTECTION MUST BE REGULARLY INSPECTED BY THE EROSION CONTROL INDIVIDUAL TO INSURE PROPER PLACEMENT/FUNCTION AND MAINTENANCE.
5. SEE INLET PROTECTION NOTES STD. PLAN E-3

NO.	REVISIONS	DATE	BY

Department of Public Works
CLARK COUNTY WASHINGTON
proud past, promising future

INLET PROTECTION TYPE 4 BIOFILTER BAGS

APPROVED — PETER CAPELLI, COUNTY ENGINEER — 01/01/04 DATE

STANDARD PLAN No. E-3c

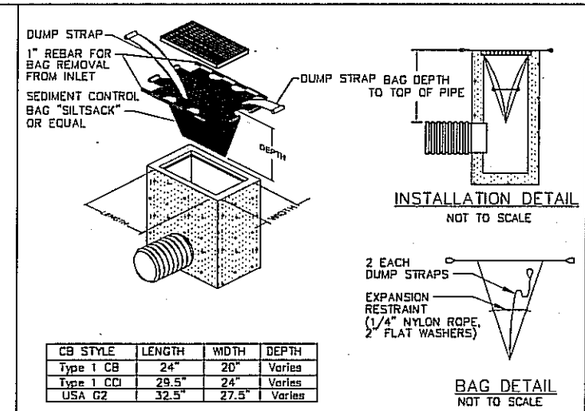

CB STYLE	LENGTH	WIDTH	DEPTH
Type 1 CB	24"	20"	Varies
Type 1 CO	29.5"	24"	Varies
USA G2	32.5"	27.5"	Varies

INLET SEDIMENT CONTROL DEVICE - SILT SACK
NTS

NOTES:

1. THE DIMENSION CHART ABOVE IS FOR STANDARD CATCH BASINS AND INLETS ONLY. THE CONTRACTOR IS RESPONSIBLE FOR PROVIDING THE CORRECT SIZE DEVICE FOR EACH INLET.
2. FOR NON-STANDARD CATCH BASINS AND INLETS, THE CONTRACTOR SHALL MEASURE DIMENSIONS IN THE FIELD AND ORDER THE APPROPRIATE SIZE(S).
3. THE INLET SEDIMENT CONTROL DEVICE SHALL BE OF HIGH FLOW DESIGN (200 GAL/MIN/FT), AS PER THE MANUFACTURER'S SPECS.
4. THE SEDIMENT CONTROL DEVICE SHALL BE INSPECTED DAILY BY THE CONTRACTOR AND MAINTAINED A MINIMUM ONCE PER MONTH OR within THE 48 HOURS FOLLOWING A STORM EVENT. FILTER SHALL BE CLEANED IN A MANNER WHICH ENSURES THAT ALL SEDIMENT REMAINS ON SITE.
5. SUBSTITUTION OF A SHEET OF FILTER FABRIC PLACED OVER THE OPENING OF THE INLET IS NOT APPROVED.
6. RECESSED CURB INLET CATCH BASINS MUST BE BLOCKED WHEN USING FILTER FABRIC INLET SACKS, SIZE OF FILTER INLET SACK TO BE DETERMINED BY MANUFACTURER.
7. THE FILTER SHALL BE REPLACED OR CLEANED WHEN THE BAG BECOMES HALF FULL.
8. SEE INLET PROTECTION NOTES STD. PLAN E-3

NO.	REVISIONS	DATE	BY
1	REVISED VERSION	11/10/03	SCH

Department of Public Works
CLARK COUNTY WASHINGTON
proud past, promising future

INLET PROTECTION TYPE 5 SILT SACK

APPROVED — PETER CAPELLI, COUNTY ENGINEER — 01/01/04 DATE

STANDARD PLAN No. E-3d

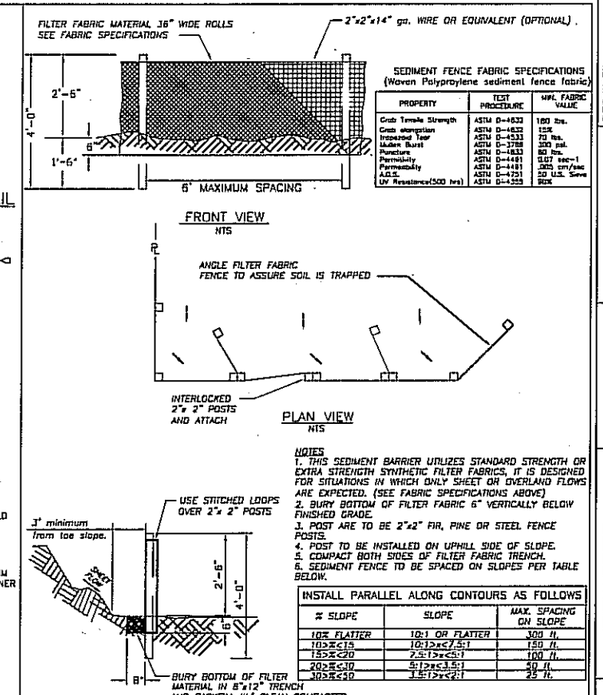

SEDIMENT FENCE FABRIC SPECIFICATIONS
(Woven Polypropylene sediment fence fabric)

PROPERTY	TEST PROCEDURE	MIN. FABRIC VALUE
Grab Tensile Strength	ASTM D-4632	180 lbs.
Grab elongation	ASTM D-4632	15%
Trapezoid Tear	ASTM D-4533	70 lbs.
Mullen Burst	ASTM D-3786	320 psi.
Puncture	ASTM D-4833	80 lbs.
Permeility	ASTM D-4491	0.07 sec-1
Permeability	ASTM D-4491	.305 cm/sec
A.O.S.	ASTM D-4751	50 U.S. Sieve
UV Resistance(500 hrs)	ASTM D-4355	90%

NOTES

1. THIS SEDIMENT BARRIER UTILIZES STANDARD STRENGTH OR EXTRA STRENGTH SYNTHETIC FILTER FABRICS, IT IS DESIGNED FOR SITUATIONS IN WHICH ONLY SHEET OR OVERLAND FLOWS ARE EXPECTED. (SEE FABRIC SPECIFICATIONS ABOVE)
2. BURY BOTTOM OF FILTER FABRIC 6" VERTICALLY BELOW FINISHED GRADE.
3. POST ARE TO BE 2"x2" FIR, PINE OR STEEL FENCE POSTS.
4. POST TO BE INSTALLED ON UPHILL SIDE OF SLOPE.
5. COMPACT BOTH SIDES OF FILTER FABRIC TRENCH.
6. SEDIMENT FENCE TO BE SPACED ON SLOPES PER TABLE BELOW.

INSTALL PARALLEL ALONG CONTOURS AS FOLLOWS		
% SLOPE	SLOPE	MAX. SPACING ON SLOPE
10% FLATTER	10:1 OR FLATTER	300 ft.
10>%≤15	10:1>x≥7.5:1	150 ft.
15>%≤20	7.5:1>x≥5:1	100 ft.
20>%≤30	5:1>x≥3.5:1	50 ft.
30>%≤50	3.5:1>x≥2:1	25 ft.

NO.	REVISIONS	DATE	BY

Department of Public Works
CLARK COUNTY WASHINGTON
proud past, promising future

STANDARD SEDIMENT FENCE

APPROVED — PETER CAPELLI, COUNTY ENGINEER — 01/01/04 DATE

STANDARD PLAN No. E-4

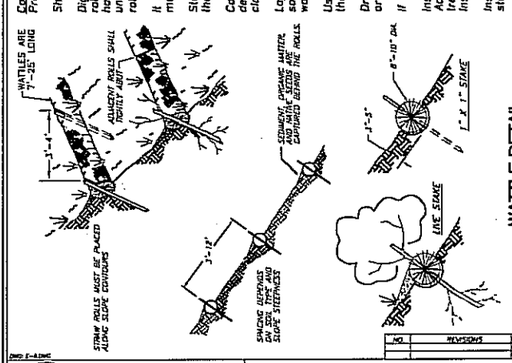

WATTLE DETAIL
NTS

WATTLES STAKED ALONG THE CONTOUR OF NEWLY CONSTRUCTED OR DISTURBED SLOPES. CAN ALSO BE USED TO REPLACE SEDIMENT FENCES ON STEEP SLOPES.

Construction Specifications:

Prepare the slope before the wattling procedure is started.

Shallow gullies should be smoothed as work progresses.

Dig small trenches across the slope on contour to place rolls in. The trench should be deep enough to accommodate half the thickness of the roll. When the soil is loose and uncompacted, the trench should be deep enough to bury the roll 2/3 of its thickness because the ground will settle.

It is critical that rolls are installed perpendicular to water movement, parallel to the slope contour.

Start building trenches and install rolls from the bottom of the slope and work up.

Construct trenches at contour intervals of 3-12 feet apart, depending on steepness of slope. The steeper the slope, the closer together the trenches.

Lay the roll along the trencher fitting it snugly against the soil. Make sure no gaps exist between the soil and the straw wattle.

Use a straight bar to drive holes through the wattle and into the soil for the willow or wooden stakes.

Drive the stake through prepared hole into soil. Leave only 1 or 2 inches of stake exposed above roll.

If using willow stakes refer to Live Staking BMP.

Install stakes at least every 4 feet apart through the wattle. Additional stakes may be driven on the downslope side of the trenches on highly erosive or very steep slopes.

Inspection and Maintenance:

Inspect the straw rolls and the slopes after significant storms. Make sure the rolls are in contact with the soil.

Repair any rills or gullys promptly.

Reseed or replant vegetation if necessary until the slope is stabilized.

NO.	REVISIONS	DATE	BY

Department of Public Works
CLARK COUNTY WASHINGTON
proud past, promising future

WATTLE SEDIMENT BARRIER

APPROVED — PETER CAPELLI, COUNTY ENGINEER — 01/01/04 DATE

STANDARD PLAN No. E-6

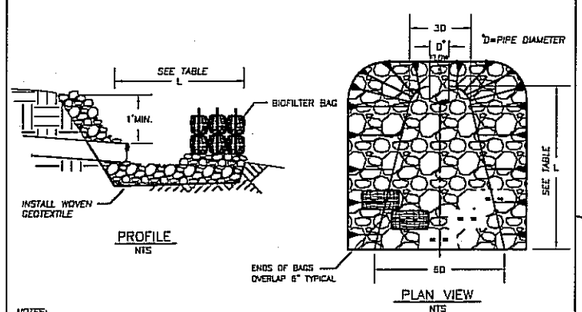

NOTES:

1. BIO-BAGS ONLY REQUIRED WHEN DISCHARGING SEDIMENT LADEN WATER. STAKING OF BAGS REQUIRED WITH EITHER METHOD USING (2) 1"x2" WOOD STAKES OR APPROVED EQUAL PER BAG.
2. RIP-RAP SIZING GOVERNED BY THE SIDE SLOPES ON THE OUTLET CHANNEL, ASSUMED TO BE 3:1.
3. PLACE WOVEN GEOTEXTILE ALONG BOTTOM AND SIDE SLOPES TO CROWN OF PIPE, AND INSTALL ROCK TO 1' ABOVE PIPE CROWN ALONG BOTH SIDES OF CHANNEL.
4. RIP-RAP SHALL BE IN ACCORDANCE WITH SECTION 9-13.1 OF THE WSDOT/APWA STANDARD SPECIFICATIONS. RIP-RAP ROCK SIZE SHALL BE AS SHOWN IN THE TABLE BELOW.
5. RIP-RAP SHALL BE HAND LAID AND REASONABLY GRADED.
6. INSPECT ONCE PER WEEK ON ACTIVE SITES, ONCE EVERY TWO WEEKS ON INACTIVE SITES, AND WITHIN 24 HOURS FOLLOWING A 0.5 INCH RAIN EVENT.
7. IF THERE IS SCOURING AT THE OUTLET, PROTECT THE ERODED AREA BY INCREASING THE SIZE OF THE ENERGY DISSIPATER FACILITY.
8. REMOVE ACCUMULATED SEDIMENT FREQUENTLY.
9. USE STANDARD PLAN FOR OUTLET PROTECTION AS A MINIMUM. CONSIDER SITE CONDITIONS TO DETERMINE IF A MORE COMPLEX ENERGY DISSIPATOR MAY BE REQUIRED.

DISCHARGE VELOCITY AT DESIGN FLOW (FPS)	REQUIRED PROTECTION MINIMUM DIMENSIONS	
	TYPE	LENGTH (L)
0 TO <5	RIP-RAP*	8' OR 3D (WHICHEVER IS GREATER)
6 TO <10	RIP-RAP**	12' OR 4D (WHICHEVER IS GREATER)
11 TO <20	GABION	AS REQUIRED
>20	ENGINEERED ENERGY DISSIPATOR REQUIRED	

* 8" MAXIMUM, 6" MEDIAN, 2" MINIMUM
** 24" MAXIMUM, 18" MEDIAN, 4" MINIMUM

NO.	REVISIONS	DATE	BY

Department of Public Works
CLARK COUNTY WASHINGTON
proud past, promising future

OUTLET PROTECTION RIP-RAP

APPROVED — PETER CAPELLI, COUNTY ENGINEER — 01/01/04 DATE

STANDARD PLAN No. E-7

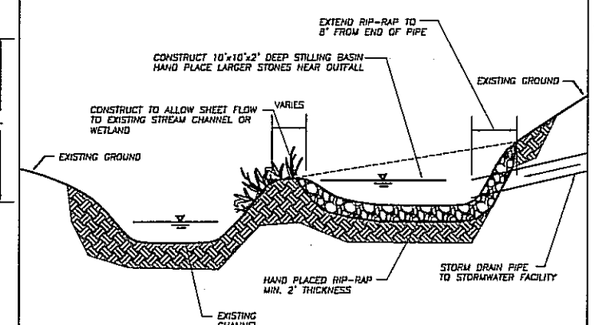

NOTES:

1. HAND PLACED RIPRAP PER WSDOT SPECIFICATION 9-13.2.
2. USE STANDARD PLAN FOR OUTLET PROTECTION AS A MINIMUM. CONSIDER SITE CONDITIONS TO DETERMINE IF A MORE COMPLEX ENERGY DISSIPATOR MAY BE REQUIRED.
3. CONTRACTOR TO COMPLY WITH CONDITIONS AND REQUIREMENTS OF COUNTY FLOODPLAIN, SHORELINE, HABITAT AND WETLANDS REVIEWS, HYDRAULIC PERMIT (HPA), AND CORPS PERMITS WHEN APPLICABLE.

NO.	REVISIONS	DATE	BY

Department of Public Works
CLARK COUNTY WASHINGTON
proud past, promising future

OUTLET PROTECTION STILLING BASIN

APPROVED — PETER CAPELLI, COUNTY ENGINEER — 01/01/04 DATE

STANDARD PLAN No. E-7a

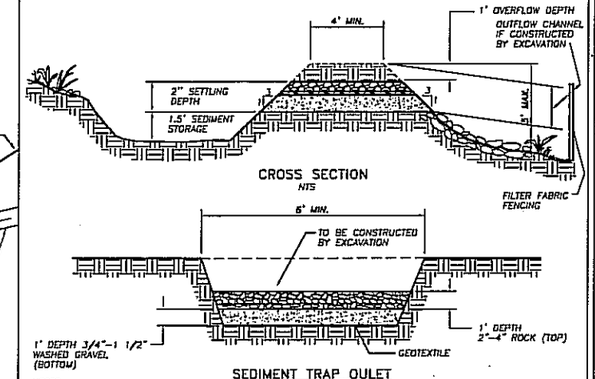

SEDIMENT TRAP OULET
NTS

NOTES:

1. THE SEDIMENT TRAP MAY BE FORMED COMPLETELY BY EXCAVATION OR BY CONSTRUCTION OF A COMPACTED EMBANKMENT, AND IS TO BE CONSTRUCTED PRIOR TO ANY UPSLOPE CLEARING AND GRADING.
2. TRAP IS TO BE LOCATED IN A LOW AREA WHERE THE TRAP WILL INTERCEPT ALL OR MOST OF THE RUNOFF FROM THE DISTURBED AREA. MUST BE ACCESSIBLE FOR MAINTENANCE.
3. PROVIDE DIVERSION DIKES AND DITCHES, AS NEEDED TO COLLECT AND DIVERT WATER SEDIMENT LADEN FLOWS TO TRAPS AND PONDS.
4. SEDIMENT TRAPS SHALL BE LIMITED TO A TRIBUTARY AREA OF LESS THAN 3 ACRES. SEE THE BMP MANUAL SECTION II-5.8.6 DESIGN CRITERIA, FOR SEDIMENT STORAGE VOLUME.
5. SEDIMENT TRAPS AND PONDS ARE TO HAVE A LEVEL BOTTOM, 3:1 OR FLATTER SIDE SLOPES AND A L:W RATIO OF 3.
6. WATER TEMPERATURE IN TRAPS AND PONDS MAY BE TOO HIGH FOR DIRECT RELEASE. ALWAYS MODERATE THE WATER TEMPERATURE BEFORE IT DRAINS INTO A LAKE, STREAM, WETLAND OR WATERWAY. WHENEVER POSSIBLE, RELEASE THE DISCHARGE ONSITE ONTO A RELATIVELY LEVEL, DENSELY GRASSED AREA AT LEAST 50 FEET FROM A WATERWAY OR WETLAND.
7. INSPECT ONCE PER WEEK ON ACTIVE SITES, ONCE EVERY TWO WEEKS ON INACTIVE SITES, AND WITHIN 24 HOURS FOLLOWING A 0.5 INCH RAIN EVENT.
8. CONSTANT MAINTENANCE IS ESSENTIAL FOR PROPER FUNCTIONING.
9. REMOVE SEDIMENT FROM THE TRAP WHEN IT REACHES ONE FOOT IN DEPTH, AND REPAIR ANY DAMAGE TO THE TRAP, THE EMBANKMENT OR THE SLOPES.
10. CARE MUST BE GIVEN TO CONSIDERING LOCATION OF TRAPS FOR SAFETY IN CASE THE STRUCTURE FAILS. FENCING MUST ALSO BE CONSIDERED FOR SAFETY.

NO.	REVISIONS	DATE	BY

Department of Public Works
CLARK COUNTY WASHINGTON
proud past, promising future

STANDARD SEDIMENT TRAP

APPROVED — PETER CAPELLI, COUNTY ENGINEER — 01/01/04 DATE

STANDARD PLAN No. E-8

DESIGNED
DRAWN CRP
HOR. N/A
VERT. N/A
DATE JUN 2006
DWG. D05
SHEET 23 OF

CALL 48 HOURS BEFORE YOU DIG 1-800-553-4344 "It's the Law" NORTHWEST UTILITIES NOTIFICATION CENTER

HOPPER DENNIS JELLISON PLLC
ENGINEERS • PLANNERS
LANDSCAPE ARCHITECTS
314 W. 15th Street (360) 695-3488
Vancouver, WA 98660 (360) 696-0577
Internet: www.hdjengineers.com FAX (360) 695-8767

DESIGN & ENGINEERING DIVISION
DESIGN SECTION

KLINELINE BRIDGE REPLACEMENT
CLARK COUNTY
STANDARD EROSION CONTROL DETAILS

CLARK COUNTY WASHINGTON
proud past, promising future

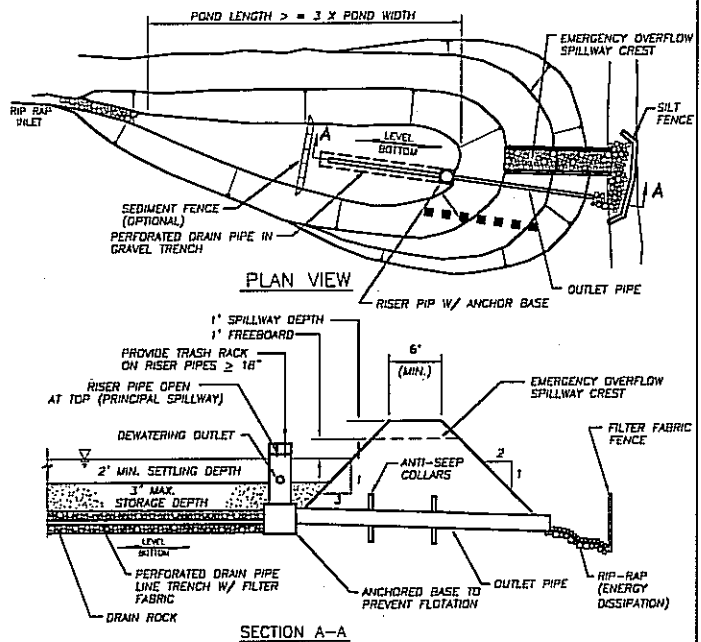

NOTES:

1. FOR USE WITH TRIBUTARY DRAINAGE AREA OF LESS THAN 10 ACRES. IF DRAINAGE AREA EXCEEDS 10 ACRES, CONSULT THE DAM SAFETY SECTION OF THE WASHINGTON DEPARTMENT OF ECOLOGY MANUAL.
2. PROVIDE BAFFLES TO PREVENT SHORT-CIRCUITING.
3. SPILLWAY SHALL BE LINED WITH 2"-4" ROCKS.
4. ALL INLETS AND OUTLETS SHALL BE PROTECTED WITH RIP-RAP.
5. IF POND POSES A SAFETY HAZARD, IT SHALL BE FENCED.
6. REMOVE SEDIMENT BEFORE 1.5" ACCUMULATES.
7. PERFORATED PIPE TRENCH SHALL BE COMPLETELY LINED WITH FILTER FABRIC.
8. SEE APPLICABLE NOTES ON STD. PLAN E-8

Department of Public Works — CLARK COUNTY WASHINGTON — proud past, promising future
TEMPORARY SEDIMENT POND — APPROVED — COUNTY ENGINEER — 11/01/04 — STANDARD E-8a

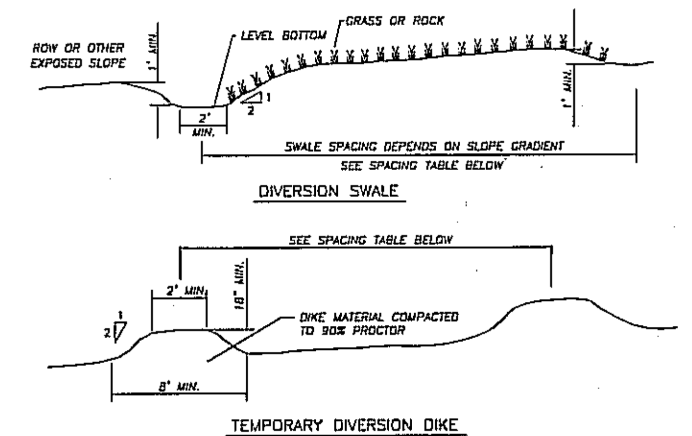

NOTES:

1. DIKE OR SWALES ARE INSTALLED TO INTERCEPT AND CONVEY SMALLER FLOWS ALONG LOW-GRADIENT DRAINAGE WAYS TO LARGER CONVEYANCES SUCH AS DITCHES OR PIPE SLOPE DRAINS OR TO A STABILIZED OUTLET, AND CAN BE USE SINGULARLY OR IN COMBINATION WITH EACH OTHER.
2. REFER TO TABLES BELOW FOR DESIGN CRITERIA FOR DIVERSION DIKES AND SWALES. INSTALL THE DIKES AND/OR SWALES HORIZONTALLY AT INTERVALS ACROSS A DISTURBED SLOPE AT SPACING ACCORDING TO TABLES.
3. FOR SLOPES OF ERODIBLE SOILS STEEPER THAN 2:1 WITH MORE THAN 10 FT. OF VERTICAL RELIEF, CONSTRUCT BENCHES OR SHORTEN DISTANCE BETWEEN DIKES AND SWALES.
4. DISCHARGE THE RUNOFF TO A STABLE CONVEYANCE THAT ROUTES THE SEDIMENT LADEN RUNOFF TO A SEDIMENT TRAP OR POND.
5. MAY NEED MATTING TO PROTECT SEED BED AND CHANNEL FROM EROSION.

DIVERSION DIKE DESIGN CRITERIA

TOP WIDTH	24" MIN.	
HEIGHT	20" MIN (90% COMPACTION)	
SIDE SLOPES	2:1 OR FLATTER	
DIKE GRADE	BETWEEN 0.5-1%	
SLOPE OF DISTURBED AREA VS. HORZ. SPACING	<5%	300 ft
	5-10%	200 ft
	10-25%	100 ft
	25-50%	50 ft
SLOPE STABILIZATION	<5%	SEED AND MULCH WITHIN 5 DAYS FOLLOWING DIKE CONSTRUCTION
OUTLET	UPSLOPE SIDE OF DIKE PROVIDES POSITIVE DRAINAGE TO OUTLET, PROVIDE RIPRAP AS NECESSARY TO PREVENT EROSION RELEASE TO SEDIMENT TRAPPING FACILITY.	

DIVERSION SWALE DESIGN CRITERIA

BOTTOM WIDTH	24" MIN. LEVEL BOTTOM ACROSS SWALE	
DEPTH	12"	
SIDE SLOPES	2:1 OR FLATTER	
GRADE	MAX. 5% POSITIVE DRAINAGE TO OUTLET	
SLOPE OF DISTURBED AREA VS. HORZ. SPACING	<5%	300 ft
	5-10%	200 ft
	10-25%	100 ft
	25-50%	50 ft
SLOPE STABILIZATION	TEMPORARILY SEED OR LINE WITH RIPRAP 12" THICK AND PRESS INTO BANK ± 3-4"	
OUTLET	LEVEL SPREADER OR RIPRAP TO STABILIZED OUTLET/SEDIMENTATION POND	

Department of Public Works — CLARK COUNTY WASHINGTON — proud past, promising future
DIVERSION DIKE/SWALE — APPROVED — COUNTY ENGINEER — 11/01/04 — STANDARD E-10

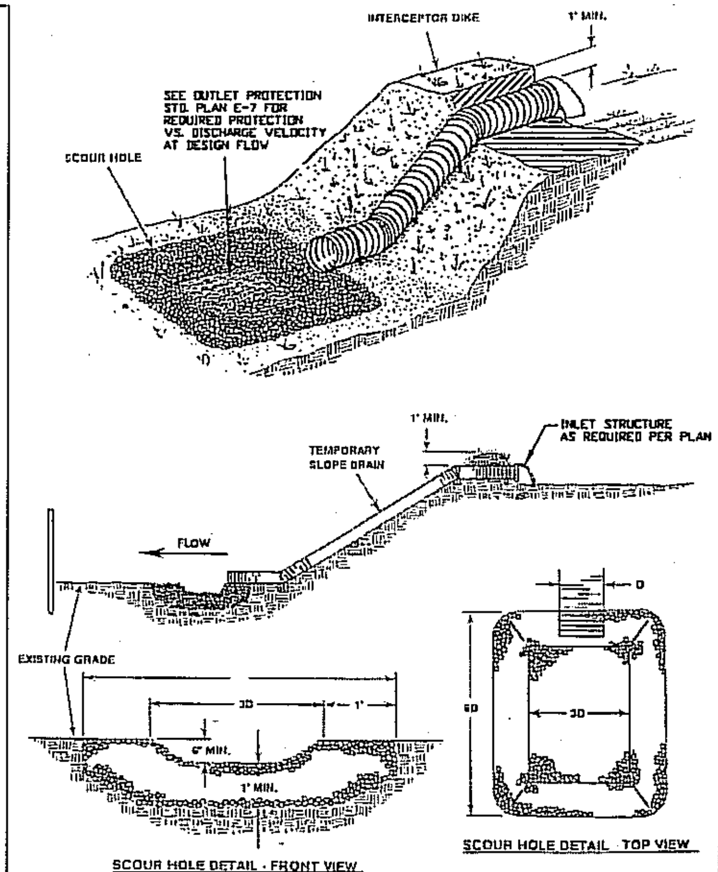

Department of Public Works — CLARK COUNTY WASHINGTON — proud past, promising future
PIPE SLOPE DRAIN — APPROVED — COUNTY ENGINEER — 11/01/04 — STANDARD E-11

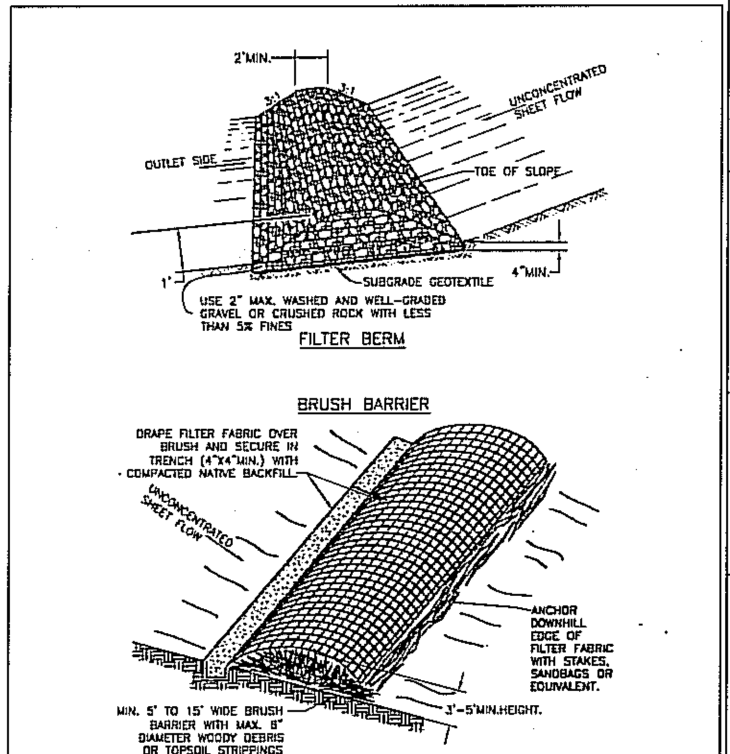

NOTES:

1. DIRECT THE OUTLET SIDE OF THE ROCK FILTER BERM/DAMS ONTO A STABILIZED AREA, SUCH AS VEGETATION AND OR ROCK.
2. EMBED A MIN. OF 4" INTO THE EXISTING GROUND/EMBANKMENT.
3. USE 3:1 OR FLATTER SIDE SLOPES.
4. USED PRIMARILY AS A BASE MEASURE AT TOE OF SLOPE

Department of Public Works — CLARK COUNTY WASHINGTON — proud past, promising future
FILTER BERM ROCK/BRUSH — APPROVED — COUNTY ENGINEER — 11/01/04 — STANDARD E-12

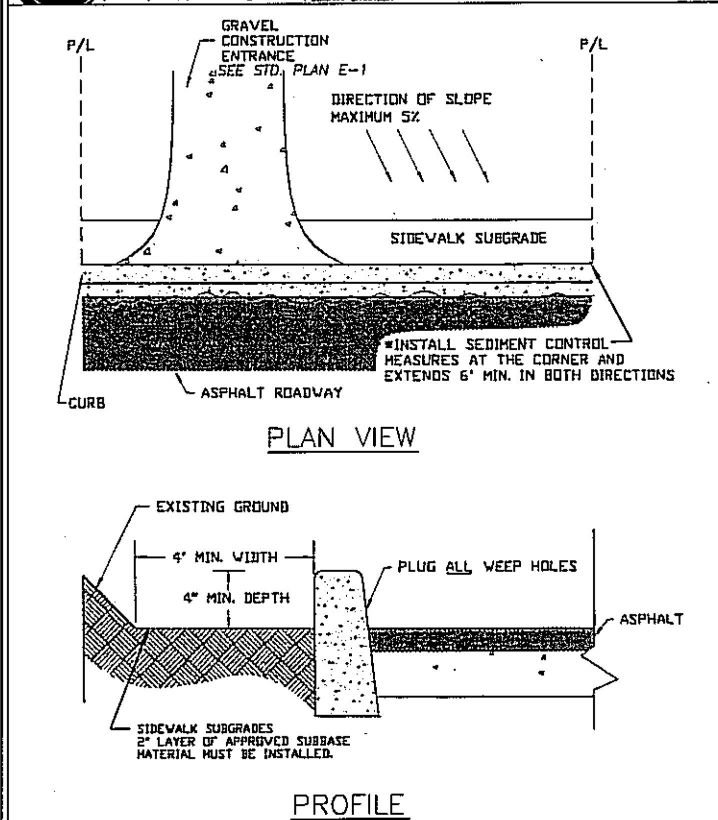

NOTE: SIDEWALK SUBGRADE CAN BE USED FOR ALL CONSTRUCTION ACTIVITIES.

Department of Public Works — CLARK COUNTY WASHINGTON — proud past, promising future
SIDEWALK SUBGRADE CURB BARRIER — APPROVED — COUNTY ENGINEER — 11/01/04 — STANDARD E-13

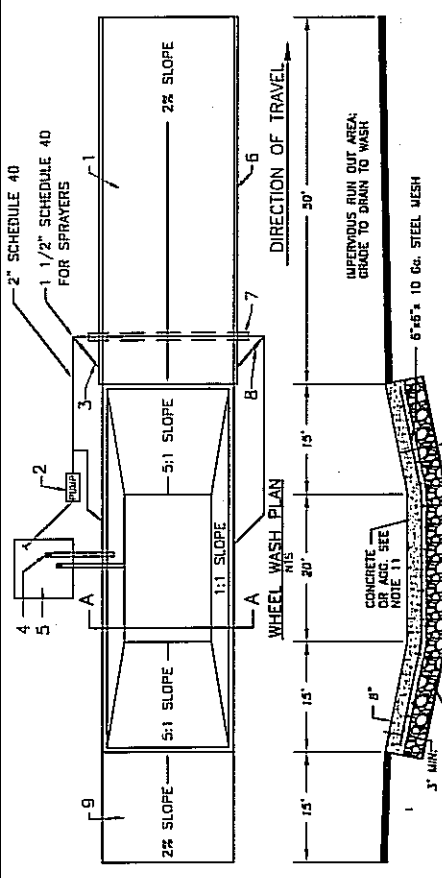

NOTES
1. ASPHALT CONSTRUCTION ENTRANCE, 6" OF ATB.
2. 3" TRASH PUMP WITH FLOATS ON SUCTION HOSE.
3. MIDPOINT SPRAY NOZZLES, IF NEEDED.
4. 6" SEWER PIPE WITH BUTTERFLY VALVES. BOTTOM PIPE IS A DRAIN. LOCATE TOP PIPE'S INVERT 1' ABOVE BOTTOM OF WHEEL WASH.
5. 8'x 8' SUMP WITH 5' OF CATCHMENT. BUILD WITH ABILITY TO CLEAN WITH BACKHOE.
6. ASPHALT CURB ON THE LOW ROAD SIDE TO DIRECT WATER BACK TO POND.
7. 6" SLEEVE UNDER ROAD.
8. BALL VALVES.
9. ATB APRON TO PROTECT FROM SPLASHING WATER.
10. CONTRACTOR TO REMOVE ACCUMULATED SEDIMENT FROM WHEEL WASH; MAY BE PIPED TO AN APPROVED SEDIMENT TRAP.
11. USE GEOTEXTILE FABRIC WITH AGGREGATE FOR A TEMPORARY WHEEL WASH.

Department of Public Works — CLARK COUNTY WASHINGTON — proud past, promising future
WHEEL WASH — APPROVED — COUNTY ENGINEER — 11/01/04 — STANDARD E-15

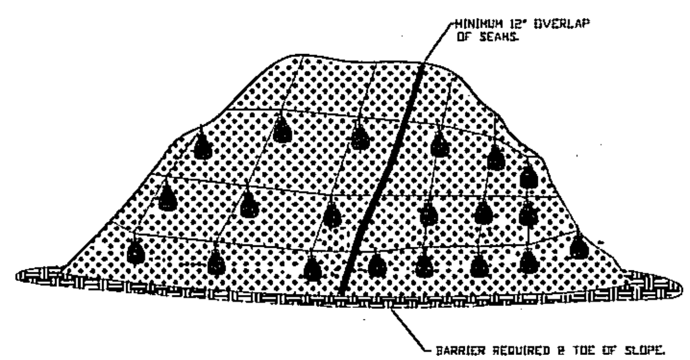

PLASTIC SHEETING

NOTES:

1. PLASTIC SHEETING IS USED TO PROVIDE IMMEDIATE PROTECTION TO SLOPES AND STOCKPILES.
2. DO NOT USE PLASTIC COVERING UPSLOPE OF AREAS SUCH AS STEEP AND/OR UNSTABLE SLOPES THAT MIGHT BE ADVERSELY AFFECTED BY CONCENTRATED RUNOFF.
3. WHEN POSSIBLE, INSTALL AN INTERCEPTER DIKE AT THE TOP OF THE PLASTIC TO DIVERT FLOWS AWAY FROM THE PLASTIC.
4. TOE-IN THE TOP OF THE SHEETING IN A 6"x6" TRENCH BACKFILLED WITH COMPACTED NATIVE MATERIAL.
5. INSTALL A GRAVEL BERM, RIPRAP, OR OTHER SUITABLE PROTECTION AT THE TOP OF THE SLOPE IN ORDER TO DISSIPATE RUNOFF VELOCITY.
6. ANCHOR THE PLASTIC USING SANDBAGS OR OTHER SUITABLE TETHERED ANCHOR SYSTEM SPACED ON A 10' GRID SPACING IN ALL DIRECTIONS.
7. OVERLAP SEAMS 1-2', TAPE, ROLL AND STAKE THE SEAMS AND THEN WEIGH DOWN THE ENTIRE LENGTH.
8. BARRIER IS REQUIRED @ TOE OF STOCK PILE.
9. REPLACE TORN SHEETS AND REPAIR OPEN SEAMS. COMPLETELY REMOVE AND REPLACE PLASTIC WHEN IT BEGINS TO DETERIORATE.

Department of Public Works — CLARK COUNTY WASHINGTON — proud past, promising future
PLASTIC SHEETING — APPROVED — COUNTY ENGINEER — 11/01/04 — STANDARD E-16

MATTING NOTES:

1. THERE ARE A WIDE RANGE OF MATERIALS AND COMBINATION OF MATERIALS USED TO PRODUCE MATTING INCLUDING, BUT NOT LIMITED TO: STRAW, JUTE, WOOD FIBER, COIR (COCONUT FIBER), PLASTIC NETTING, AND BONDED FIBER MATRIX. THE SELECTION OF MATTING MATERIAL FOR A SITE CAN MAKE A SIGNIFICANT DIFFERENCE IN THE EFFECTIVENESS OF THE BMP.
2. GENERALLY, MATTING IS USED ON SLOPES 2:1 AND STEEPER.
3. SURFACE MUST BE GRADED SMOOTH TO REMOVE ALL DEBRIS AND UNDULATIONS LARGER THAN 2" IN ANY DIRECTION.
4. APPLY SEED AND FERTILIZER PRIOR TO MATTING. INSTALL SO THAT MATTING IS IN COMPLETE CONTACT WITH SOIL SURFACE.
5. STAPLES ARE TO BE INSTALLED PER MANUFACTURES SPECIFICATIONS.
6. ORGANIC MATTING MATERIALS (EXCELSIOR, JUTE, AND COIR) BIODEGRADE AND ARE USEFUL FOR APPLICATIONS REQUIRING STABILIZATION FOR UP TO THREE MONTHS. USE ORGANIC BLANKETS, WHICH RETAIN MOISTURE AND PROVIDE ORGANIC MATTER TO THE SOIL. FOR SLOPE PROTECTION AND SHORT-TERM WATERWAY PROTECTION AND TO IMPROVE THE SPEED AND SUCCESS OF REVEGETATION.
   - EXCELSIOR BRAND (ASPEN WOOD FIBER), WOVEN STRAW, AND COIR BLANKETS MAY BE INSTALLED WITHOUT MULCH BECAUSE THEY PROVIDE COMPLETE SURFACE PROTECTION.
7. SYNTHETIC MATS ARE MADE FROM NON-BIODEGRADABLE MATERIALS AND WILL REMAIN IN PLACE FOR YEARS (SOME PHOTODEGRADATION DOES OCCUR). USE PURELY SYNTHETIC BLANKETS FOR LONG-TERM STABILIZATION OF WATERWAYS.
   - TURF REINFORCEMENT MATS (TRM) ARE MADE FROM POLYMER NETTING OR MONOFILAMENTS FORMED INTO A SYNTHETIC 3-D MAT. TRMs PROTECT SEED AND INCREASE GERMINATION AND ALSO ACTS AS PART OF THE ROOT STRUCTURE; GIVING THE TURF HIGHER STRENGTH.
   - EROSION CONTROL AND REVEGETATION MATS (ECRM), COMPOSED OF HEAT-FUSED MONOFILAMENTS AND MONOFILAMENTS STITCHED BETWEEN NETTING ACT AS PERMANENT MULCH. ECRM ALLOW GROWTH THROUGH THE MAT.
8. CHANNEL OR SWALE APPLICATIONS: LENGTHWISE OVERLAP MATTING A MINIMUM OF 12"; CROSSWISE OVERLAP A MINIMUM OF 6", AND AVOID JOINING MATERIAL IN CENTER OF DITCH OR SWALE.
9. SLOPE APPLICATION: LENGTHWISE OVERLAP MATTING A MINIMUM OF 6"; CROSSWISE OVERLAP A MINIMUM OF 6"; AT TOP OF SLOPE, ENTRENCH MATERIAL IN A 6"x6" TRENCH AND STAPLE AT 12" INTERVAL; AT BOTTOM OF SLOPE, EXTEND MAT 2 FEET BEYOND THE TOE OF THE SLOPE, TURN MATERIAL UNDER 4" AND STAPLE AT 12" INTERVAL; ON 4:1 SLOPES, ROLLS CAN BE PLACED IN HORIZONTAL STRIPS; MATS MUST BE STAPLED IN PLACE AS THEY ARE INSTALLED DOWN THE SLOPE FACE EVERY 4' UNTIL YOU REACH THE BOTTOM. THIS KEEPS BLANKET IN A RELAXED POSITION, ELIMINATING THE POTENTIAL FOR UNDER-RILLING.
10. INSPECT ONCE PER WEEK ON ACTIVE SITES, ONCE EVERY TWO WEEKS ON INACTIVE SITES, AND WITHIN 24 HOURS FOLLOWING A 0.5 INCH RAIN EVENT.
11. REPAIR ANY DAMAGED AREAS OF THE NET OR BLANKET AND STAPLE INTO THE GROUND ANY AREAS NOT IN CLOSE CONTACT WITH THE GROUND SURFACE.
12. IF EROSION OCCURS, REPAIR AND PROTECT THE ERODED AREA.

Department of Public Works — CLARK COUNTY WASHINGTON — proud past, promising future
MATTING GENERAL NOTES — APPROVED — COUNTY ENGINEER — 11/01/04 — STANDARD E-17

DESIGNED — DRAWN — CRP 341322 — HOR. N/A — VERT. N/A — DATE JUN 2006 — DWG: D06 — SHEET 24 OF

CALL 48 HOURS BEFORE YOU DIG 1-800-553-4344 "It's the Law" NORTHWEST UTILITIES NOTIFICATION CENTER

HOPPER DENNIS JELLISON P.L.L.C. ENGINEERS · PLANNERS LANDSCAPE ARCHITECTS

DESIGN & ENGINEERING DIVISION
DESIGN SECTION

KLINELINE BRIDGE REPLACEMENT
CLARK COUNTY
STANDARD EROSION CONTROL DETAILS

CLARK COUNTY WASHINGTON — proud past, promising future

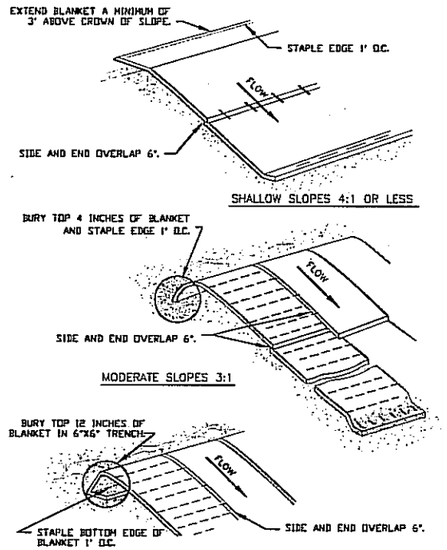

NOTES:

1. ON 4:1 OR LESS SLOPES BLANKETS MAY BE APPLIED ACROSS THE SLOPE.
2. ALL BLANKET INSTALLED AND STAPLED PER MANUFACTURERS SPECIFICATIONS.
3. SEE MATTING NOTES STD. PLAN E-17

NO.	REVISIONS	DATE	BY

DWG E-17a

Department of Public Works
CLARK COUNTY WASHINGTON
proud past, promising future

MATTING
SLOPE INSTALLATION DETAIL

APPROVED
PETER CAPELLI, COUNTY ENGINEER — 01/01/04 DATE

STANDARD E-17a
PLAN NO.
REVISED SCH
DRAWN SCH
DATE 10/01/02

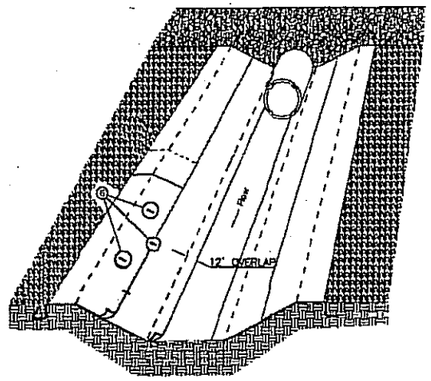

CHANNEL INSTALLATION

NOTES:

1. INFORMATION PROVIDED IS MINIMUM REQUIREMENTS. MANUFACTURERS REQUIREMENTS WHICH ARE MORE STRINGENT SHALL BE USED.
2. INSTALL MAT PARALLEL IN CENTER OF CHANNEL IN THE DIRECTION OF FLOW. FOR CULVERT OUTFALLS, PLACE MAT UNDER CULVERT OR RIP RAP A MIN. OF 12".
3. IN CHANNEL BOTTOM, OVERLAP LENGTH ENDS A MINIMUM OF 12 INCHES.
4. REFER TO STD. PLAN E-17 FOR MATTING NOTES.
5. STAPLE PER MANUFACTURERS SPECIFICATIONS
6. LENGTH OF STAPLES SHALL BE DETERMINDED BY SOIL TYPE—COHESIVE SOIL USE 6 INCH, NON-COHESIVE SOILS 8-12 INCH.

NO.	REVISIONS	DATE	BY

DWG E-17b

Department of Public Works
CLARK COUNTY WASHINGTON
proud past, promising future

MATTING
CHANNEL INSTALLATION DETAIL

APPROVED
PETER CAPELLI, COUNTY ENGINEER — 01/01/04 DATE

STANDARD E-17b
PLAN NO.
REVISED SCH
DRAWN SCH
DATE 10/01/02

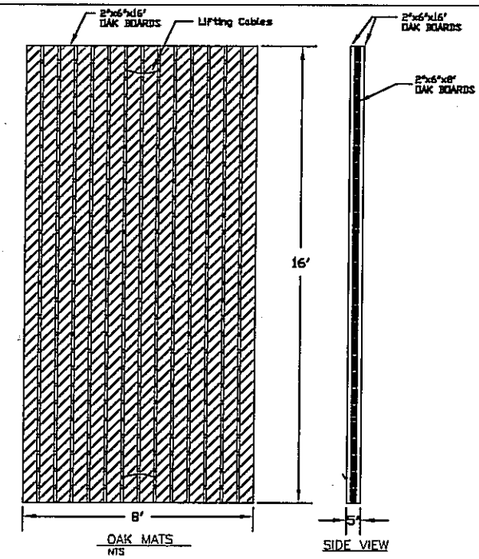

NOTES:

1. TO BE USED AS A STABILIZED PLATFORM LOCATED AT SPECIFIED POINTS OF CONSTRUCTION FOR THE PURPOSE OF TEMPORARY OR PERMANENT ACCESS. OAK MATS HAVE TWO BENEFITS: REDUCE OVERALL TRACKING FROM CONSTRUCTION SITES, AND CREATES A STABLE PAD FOR HEAVY EQUIPMENT, ESPECIALLY WHEN WORKING AROUND SENSITIVE AREAS SUCH AS WETLANDS AND STREAMS.
2. DIMENSIONS: 8'x16'x4-1/2" (3 PLY LAMINATED OAK)
3. BUILT TO WITHSTAND HEAVY EQUIPMENT SUCH AS CRANES, DUMP TRUCKS, AND BACK HOES.
4. ON LINEAR PROJECTS THAT PARALLEL STREAMS OR WETLANDS INSTALL AS A CONTINUOUS WORKING PAD TO REDUCE SOIL "PUMPING"
5. MINOR EXCAVATION OF SURFACE AREA MAY BE REQUIRED PRIOR TO INSTALLATION OF MATS.

NO.	REVISIONS	DATE	BY

DWG E-17c

Department of Public Works
CLARK COUNTY WASHINGTON
proud past, promising future

OAK MATS

APPROVED
PETER CAPELLI, COUNTY ENGINEER — 01/01/04 DATE

STANDARD E-17c
PLAN NO.
REVISED SCH
DRAWN SCH
DATE 10/01/02

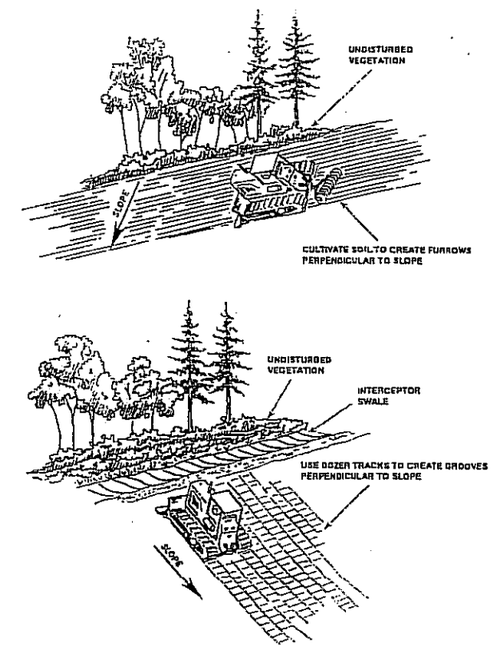

NO.	REVISIONS	DATE	BY

DWG E-18,19a

Department of Public Works
CLARK COUNTY WASHINGTON
proud past, promising future

SURFACE ROUGHENING
CAT TRACKING

APPROVED
PETER CAPELLI, COUNTY ENGINEER — 01/01/04 DATE

STANDARD E-18
PLAN NO.
REVISED SCH
DRAWN SCH
DATE 10/01/02

STAIR STEPPING CUT SLOPES

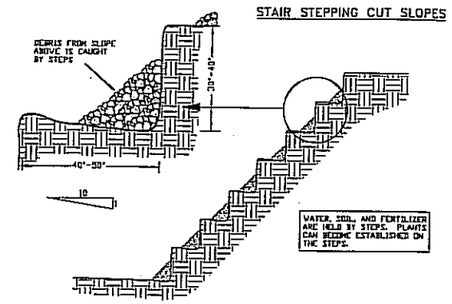

GROOVING SLOPES

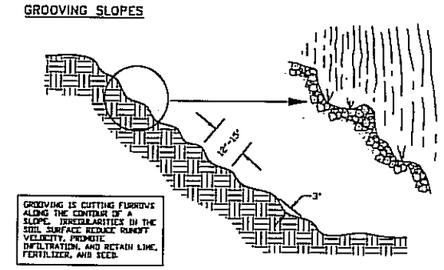

NO.	REVISIONS	DATE	BY

DWG E-18a

Department of Public Works
CLARK COUNTY WASHINGTON
proud past, promising future

SURFACE ROUGHENING
STAIR STEPPING / GROOVING

APPROVED
PETER CAPELLI, COUNTY ENGINEER — 01/01/04 DATE

STANDARD E-18a
PLAN NO.
REVISED SCH
DRAWN SCH
DATE 10/01/02

DESIGNED
DRAWN
CRP 341322
HOR. N/A
VERT. N/A
DATE JUN 2006
DWG. D07
SHEET 25 OF

CALL 48 HOURS BEFORE YOU DIG
1-800-553-4344
"It's the Law"
NORTHWEST UTILITIES NOTIFICATION CENTER

HOPPER DENNIS ELLISON P.L.L.C.
ENGINEERS • PLANNERS
LANDSCAPE ARCHITECTS
314 W. 15th Street
Vancouver, WA 98660-3927
(360) 695-3488
(503) 223-4005
FAX (360) 695-8767
Internet: www.hdellisonpacific.com

DESIGN & ENGINEERING DIVISION
DESIGN SECTION

KLINELINE BRIDGE REPLACEMENT
CLARK COUNTY
STANDARD EROSION CONTROL DETAILS

proud past, promising future
CLARK COUNTY WASHINGTON

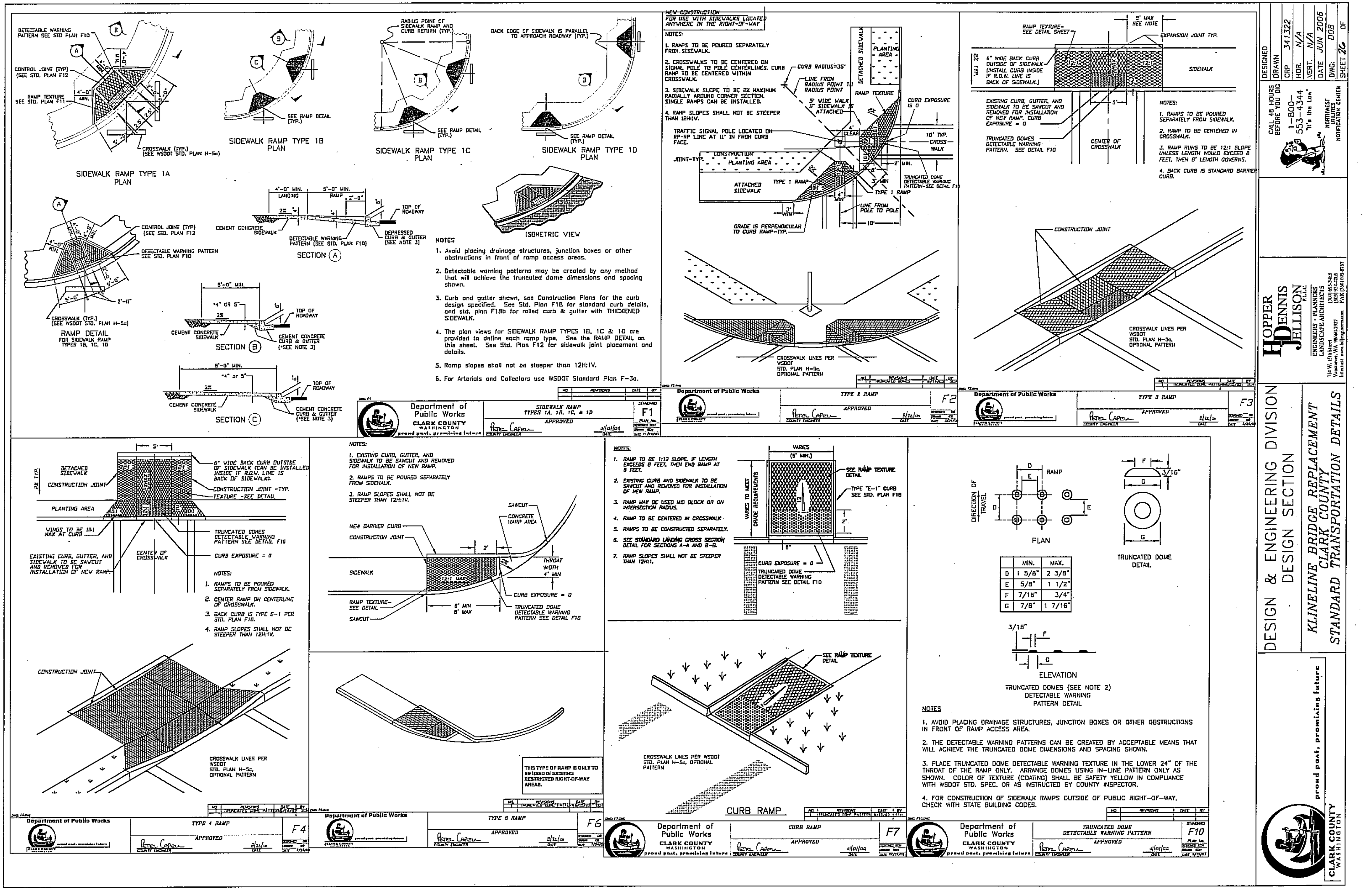
SIDEWALK RAMP TYPE 1A PLAN
SIDEWALK RAMP TYPE 1B PLAN
SIDEWALK RAMP TYPE 1C PLAN
SIDEWALK RAMP TYPE 1D PLAN
DETECTABLE WARNING PATTERN SEE STD PLAN F10
CONTROL JOINT (TYP) (SEE STD. PLAN F12
RAMP TEXTURE SEE STD. PLAN F11
CROSSWALK (TYP.) (SEE WSDOT STD. PLAN H-5c)
SEE RAMP DETAIL (TYP.)
RADIUS POINT OF SIDEWALK RAMP AND CURB RETURN (TYP.)
BACK EDGE OF SIDEWALK IS PARALLEL TO APPROACH ROADWAY (TYP.)
RAMP DETAIL FOR SIDEWALK RAMP TYPES 1B, 1C, 1D
SECTION A
SECTION B
SECTION C
CEMENT CONCRETE SIDEWALK
DETECTABLE WARNING PATTERN (SEE STD. PLAN F10)
DEPRESSED CURB & GUTTER (SEE NOTE 3)
TOP OF ROADWAY
CEMENT CONCRETE CURB & GUTTER (*SEE NOTE 3)
ISOMETRIC VIEW
NOTES
1. Avoid placing drainage structures, junction boxes or other obstructions in front of ramp access areas.
2. Detectable warning patterns may be created by any method that will achieve the truncated dome dimensions and spacing shown.
3. Curb and gutter shown, see Construction Plans for the curb design specified. See Std. Plan F18 for standard curb details, and std. plan F18b for rolled curb & gutter with THICKENED SIDEWALK.
4. The plan views for SIDEWALK RAMP TYPES 1B, 1C & 1D are provided to define each ramp type. See the RAMP DETAIL on this sheet. See Std. Plan F12 for sidewalk joint placement and details.
5. Ramp slopes shall not be steeper than 12H:1V.
6. For Arterials and Collectors use WSDOT Standard Plan F-3a.
Department of Public Works
CLARK COUNTY WASHINGTON
proud past, promising future
SIDEWALK RAMP TYPES 1A, 1B, 1C, & 1D
APPROVED
COUNTY ENGINEER
F1
NEW CONSTRUCTION
FOR USE WITH SIDEWALKS LOCATED ANYWHERE IN THE RIGHT-OF-WAY
NOTES:
1. RAMPS TO BE POURED SEPARATELY FROM SIDEWALK.
2. CROSSWALKS TO BE CENTERED ON SIGNAL POLE TO POLE CENTERLINES. CURB RAMP TO BE CENTERED WITHIN CROSSWALK.
3. SIDEWALK SLOPE TO BE 2% MAXIMUM RADIALLY AROUND CORNER SECTION. SINGLE RAMPS CAN BE INSTALLED.
4. RAMP SLOPES SHALL NOT BE STEEPER THAN 12H:1V.
TRAFFIC SIGNAL POLE LOCATED ON RP-RP LINE AT 11' IN FROM CURB FACE.
CURB RADIUS=35'
PLANTING AREA
ATTACHED SIDEWALK
GRADE IS PERPENDICULAR TO CURB RAMP-TYP.
CROSSWALK LINES PER WSDOT STD. PLAN H-5c, OPTIONAL PATTERN
TYPE 2 RAMP
F2
RAMP TEXTURE SEE DETAIL SHEET
8' MAX SEE NOTE
EXPANSION JOINT TYP.
6" WIDE BACK CURB OUTSIDE OF SIDEWALK (INSTALL CURB INSIDE IF R.O.W. LINE IS BACK OF SIDEWALK.)
EXISTING CURB, GUTTER, AND SIDEWALK TO BE SAWCUT AND REMOVED FOR INSTALLATION OF NEW RAMP. CURB EXPOSURE = 0
TRUNCATED DOMES DETECTABLE WARNING PATTERN. SEE DETAIL F10
CENTER OF CROSSWALK
NOTES:
1. RAMPS TO BE POURED SEPARATELY FROM SIDEWALK.
2. RAMP TO BE CENTERED IN CROSSWALK.
3. RAMP RUNS TO BE 12:1 SLOPE UNLESS LENGTH WOULD EXCEED 8 FEET, THEN 8' LENGTH GOVERNS.
4. BACK CURB IS STANDARD BARRIER CURB.
CONSTRUCTION JOINT
CROSSWALK LINES PER WSDOT STD. PLAN H-5c, OPTIONAL PATTERN
TYPE 3 RAMP
F3
NOTES:
1. RAMPS TO BE POURED SEPARATELY FROM SIDEWALK.
2. CENTER RAMP ON CENTERLINE OF CROSSWALK.
3. BACK CURB IS TYPE E-1 PER STD. PLAN F18.
4. RAMP SLOPES SHALL NOT BE STEEPER THAN 12H:1V.
WINGS TO BE 10:1 MAX AT CURB
TRUNCATED DOMES DETECTABLE WARNING PATTERN SEE DETAIL F10
CURB EXPOSURE = 0
TYPE 4 RAMP
F4
NOTES:
1. EXISTING CURB, GUTTER, AND SIDEWALK TO BE SAWCUT AND REMOVED FOR INSTALLATION OF NEW RAMP.
2. RAMPS TO BE POURED SEPARATELY FROM SIDEWALK.
3. RAMP SLOPES SHALL NOT BE STEEPER THAN 12H:1V.
NEW BARRIER CURB
CONCRETE WARP AREA
THROAT WIDTH 4' MIN
THIS TYPE OF RAMP IS ONLY TO BE USED IN EXISTING RESTRICTED RIGHT-OF-WAY AREAS.
TYPE 6 RAMP
F6
NOTES:
1. RAMP TO BE 1:12 SLOPE. IF LENGTH EXCEEDS 8 FEET, THEN END RAMP AT 8 FEET.
2. EXISTING CURB AND SIDEWALK TO BE SAWCUT AND REMOVED FOR INSTALLATION OF NEW RAMP.
3. RAMP MAY BE USED MID BLOCK OR ON INTERSECTION RADIUS.
4. RAMP TO BE CENTERED IN CROSSWALK.
5. RAMPS TO BE CONSTRUCTED SEPARATELY.
6. SEE STANDARD LANDING CROSS SECTION DETAIL FOR SECTIONS A-A AND B-B.
7. RAMP SLOPES SHALL NOT BE STEEPER THAN 12H:1.
SEE RAMP TEXTURE DETAIL
TYPE "E-1" CURB SEE STD. PLAN F18
CURB RAMP
F7
TRUNCATED DOME DETAIL
TRUNCATED DOMES (SEE NOTE 2) DETECTABLE WARNING PATTERN DETAIL
	MIN.	MAX.
D	1 5/8"	2 3/8"
E	5/8"	1 1/2"
F	7/16"	3/4"
G	7/8"	1 7/16"
NOTES
1. AVOID PLACING DRAINAGE STRUCTURES, JUNCTION BOXES OR OTHER OBSTRUCTIONS IN FRONT OF RAMP ACCESS AREA.
2. THE DETECTABLE WARNING PATTERNS CAN BE CREATED BY ACCEPTABLE MEANS THAT WILL ACHIEVE THE TRUNCATED DOME DIMENSIONS AND SPACING SHOWN.
3. PLACE TRUNCATED DOME DETECTABLE WARNING TEXTURE IN THE LOWER 24" OF THE THROAT OF THE RAMP ONLY. ARRANGE DOMES USING IN-LINE PATTERN ONLY AS SHOWN. COLOR OF TEXTURE (COATING) SHALL BE SAFETY YELLOW IN COMPLIANCE WITH WSDOT STD. SPEC. OR AS INSTRUCTED BY COUNTY INSPECTOR.
4. FOR CONSTRUCTION OF SIDEWALK RAMPS OUTSIDE OF PUBLIC RIGHT-OF-WAY, CHECK WITH STATE BUILDING CODES.
TRUNCATED DOME DETECTABLE WARNING PATTERN
F10
DESIGNED
DRAWN
CRP 341322
HOR. N/A
VERT. N/A
DATE JUN 2006
DWG. D08
SHEET 26 OF
CALL 48 HOURS BEFORE YOU DIG 1-800-553-4344 "It's the Law"
HOPPER DENNIS JELLISON P.L.L.C.
ENGINEERS · PLANNERS LANDSCAPE ARCHITECTS
DESIGN & ENGINEERING DIVISION
DESIGN SECTION
KLINELINE BRIDGE REPLACEMENT
CLARK COUNTY
STANDARD TRANSPORTATION DETAILS
proud past, promising future
CLARK COUNTY WASHINGTON

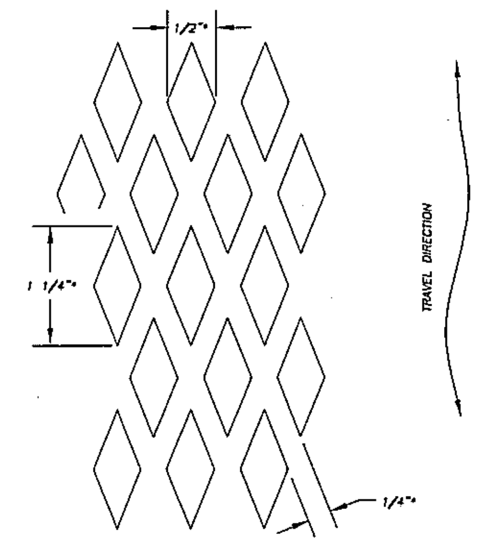

* NOMINAL DIMENSIONS

RAMP TEXTURE DETAIL

RAMP TEXTURE IS TO BE DONE WITH AN EXPANDED METAL GRATE PLACED AND REMOVED FROM WET CONCRETE TO LEAVE A DIAMOND PATTERN AS SHOWN. THE LONG AXIS OF THE DIAMOND PATTERN SHALL BE IN THE DIRECTION OF TRAVEL. GROOVES SHALL BE 1/8" DEEP AND 1/4" WIDE. ALTERNATIVE TEXTURE PATTERNS SHALL BE APPROVED BY REVIEWING AUTHORITY BEFORE USE.

Department of Public Works — RAMP TEXTURE DETAIL — F11 — APPROVED — COUNTY ENGINEER

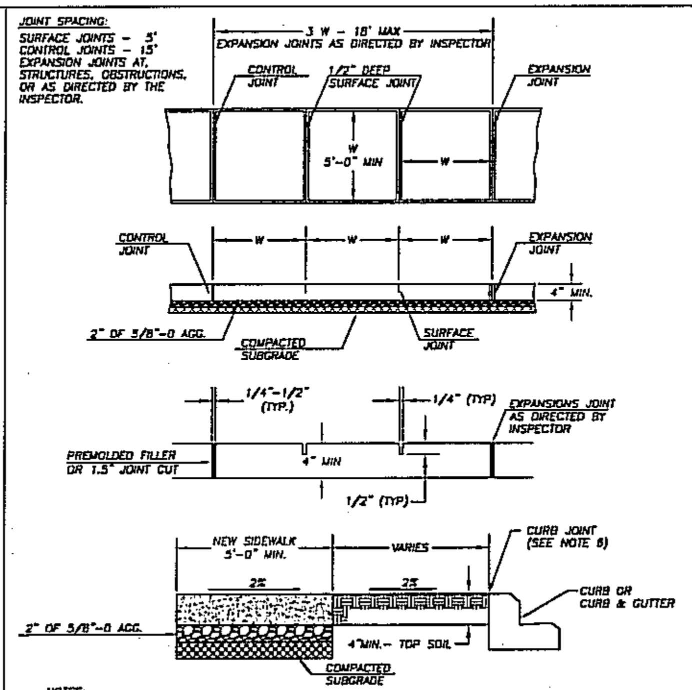

NOTES:

1. CONCRETE SHALL BE 3,000 PSI MIN. (CLASS 3000), 3 1/2" SLUMP (± 1")
2. FINISH SHALL BE MEDIUM BROOM PERPENDICULAR TO PEDESTRIAN TRAFFIC UNLESS OTHERWISE DIRECTED.
3. ALL EXISTING EDGES SHALL BE SAWCUT.
4. NO FILLER REQUIRED FOR SURFACE JOINTS.
5. ALL JOINTS AND EDGES SHALL BE FINISHED WITH 1/4" RADIUS EDGER (3" SMOOTH EACH SIDE)
6. FOR SIDEWALKS ADJACENT TO THE CURB AND POURED AT THE SAME TIME AS THE CURB, THE JOINT BETWEEN THEM SHALL BE A TROWELED JOINT WITH A MIN. 1/2" RADIUS.

Department of Public Works, CLARK COUNTY WASHINGTON — SIDEWALK DETAIL — STANDARD F12 — APPROVED — COUNTY ENGINEER

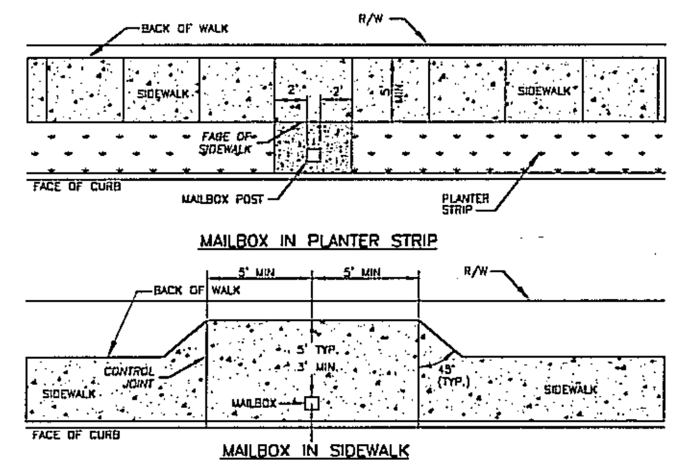

MAILBOX IN PLANTER STRIP

MAILBOX IN SIDEWALK

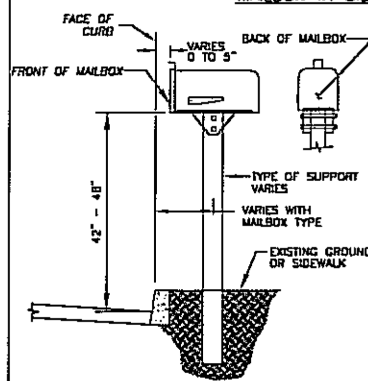

NOTES:

1. SEE CURRENT WSDOT STANDARD PLAN No. H-12 FOR MAILBOX, POST, BRACKET AND OTHER INSTALLATION DETAILS.
2. MAILBOXES MUST BE POSTMASTER APPROVED. CONTACT MIKE WENTZEL (MAINTENANCE MANAGER) AT 992-5052.
3. LOCATION OF MAILBOXES ARE SUBJECT TO APPROVAL BY COUNTY ENGINEERING FOR ACCESS AND SIGHT DISTANCE REQUIREMENTS. CONTACT ENGINEERING SERVICES AT 397-2375 ext. 4997
4. INSTALL EXPANSION JOINT MATERIAL AROUND MAILBOX POST WHEN SET IN SIDEWALK.
5. EXTEND SIDEWALK JOINTS THROUGH WIDENED SIDEWALK SECTION.
6. COLLECTION BOX UNITS (CBU) AND CONCRETE BASE ARE INSTALLED BY THE U.S. POSTAL SERVICE. SEE NOTE 2 FOR CONTACT.
7. A MAILBOX TURNOUT CONFORMING TO DETAIL F13b IS REQUIRED FOR ALL STREETS EXCEPT ACCESS AND SUBCOLLECTOR STREETS WHERE THE POSTED SPEED LIMIT IS 25 MPH OR LESS.

WSDOT STD. PLANS WEB SITE ADDRESS: http://www.wsdot.wa.gov/eesc/design/designstandards/HTM/TOC.pdf

Department of Public Works, CLARK COUNTY WASHINGTON — SIDEWALK MAILBOX PLACEMENT — STANDARD F13 — APPROVED — COUNTY ENGINEER

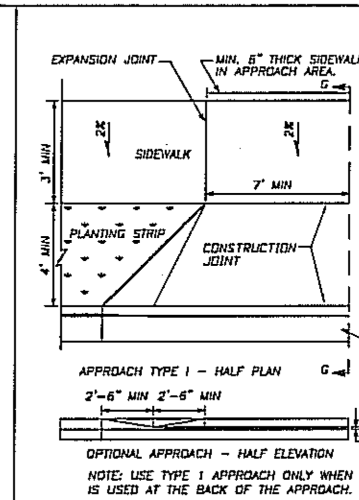

APPROACH TYPE 1 – HALF PLAN

OPTIONAL APPROACH – HALF ELEVATION

NOTE: USE TYPE 1 APPROACH ONLY WHEN A SIDEWALK IS USED AT THE BACK OF THE APPROACH.

NOTES:

1. A MINIMUM 3' WIDE ACCESSIBLE ROUTE SHALL BE MAINTAINED IN ALL PEDESTRIAN ACCESSIBLE AREAS.
2. CONTRACTION POINTS SHALL BE PLACED ALONG SIDEWALKS IN ACCORD WITH SIDEWALK DETAIL. ALL JOINTS SHALL BE CLEANED AND EDGED.
3. CHANGES IN LEVEL UP TO 1/4" MAY BE VERTICAL AND WITHOUT EDGE TREATMENT. CHANGES IN LEVEL BETWEEN 1/4" AND 1/2" SHALL BE BEVELED WITH A SLOPE NO GREATER THAN 2:1.
4. CEMENT CONCRETE APPROACHES SHALL BE CONSTRUCTED OF AIR-ENTRAINED CLASS 3000 AND MAY BE POURED INTEGRAL WITH CURB.
5. EXISTING CURB, GUTTER, AND SIDEWALK TO BE SAWCUT AND REMOVED FOR INSTALLATION OF APPROACH.
6. COMMERCIAL DRIVEWAY REQUIRES REINFORCING STEEL (6"x6" 10 GA WIRE MESH) MIN. 3" COVER.
7. 3" DEPTH 3/4"-0 CRUSHED AGGREGATE BASE COMPACTED TO 95% OF MAX. DRY DENSITY.
8. SUBGRADE PREPARATION PER WSDOT STD. SPEC. 2-06.3(1).

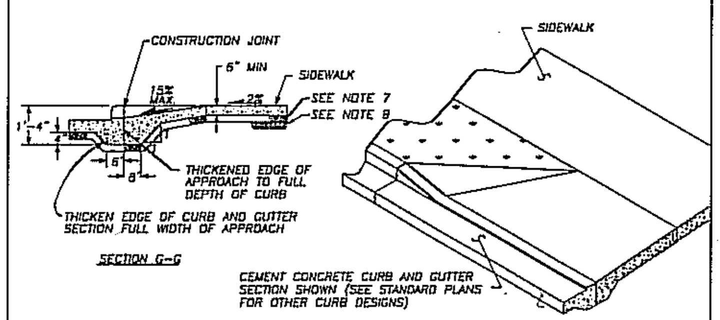

SECTION G-G

APPROACH TYPE 1 – HALF ISOMETRIC

Department of Public Works — DETAIL – TYPE 1 CEMENT CONCRETE APPROACH — F14 — APPROVED — COUNTY ENGINEER

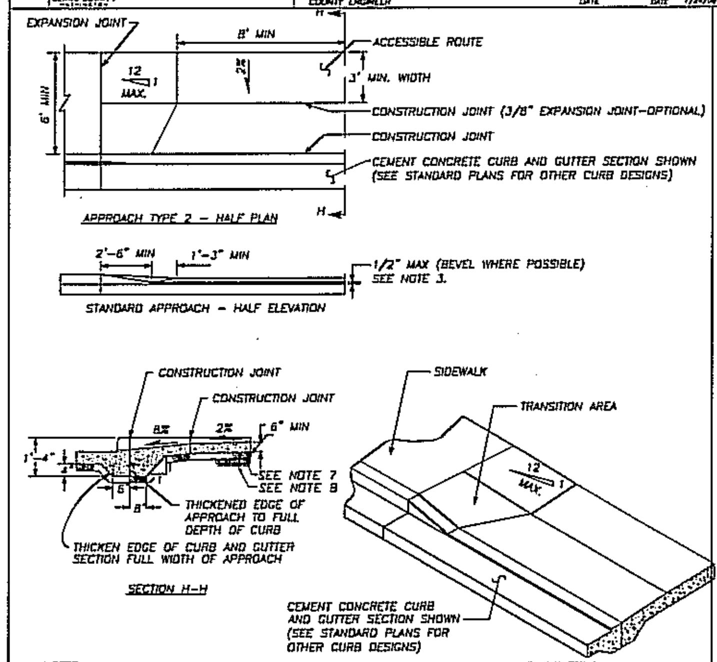

APPROACH TYPE 2 – HALF PLAN

STANDARD APPROACH – HALF ELEVATION

SECTION H-H

APPROACH TYPE 2 – HALF ISOMETRIC

NOTES:

1. A MINIMUM 3' WIDE ACCESSIBLE ROUTE SHALL BE MAINTAINED IN ALL PEDESTRIAN ACCESSIBLE AREAS.
2. CONTRACTION JOINTS SHALL BE PLACED ALONG SIDEWALKS IN ACCORD WITH SIDEWALK DETAIL. ALL JOINTS SHALL BE CLEANED AND EDGED.
3. CHANGES IN LEVEL UP TO 1/4" MAY BE VERTICAL AND WITHOUT EDGE TREATMENT. CHANGES IN LEVEL BETWEEN 1/4" AND 1/2" SHALL BE BEVELED WITH A SLOPE NO GREATER THAN 2:1.
4. CEMENT CONCRETE APPROACHES SHALL BE CONSTRUCTED OF AIR-ENTRAINED CONCRETE CLASS 3000 AND MAY BE POURED INTEGRAL WITH CURB.
5. EXISTING CURB, GUTTER AND SIDEWALK TO BE SAWCUT AND REMOVED FOR INSTALLATION OF APPROACH.
6. COMMERCIAL DRIVEWAY REQUIRES REINFORCING STEEL (6"x6" 10 GA WIRE MESH) MIN. 3" COVER
7. 3" DEPTH 3/4"-0 CRUSHED AGGREGATE BASE COMPACTED TO 95% OF MAX. DRY DENSITY.
8. SUBGRADE PREPARATION PER WSDOT STD. SPEC. 2-06.3(1).

Department of Public Works — CEMENT CONCRETE APPROACH DETAIL – TYPE 2 — F15 — APPROVED — COUNTY ENGINEER

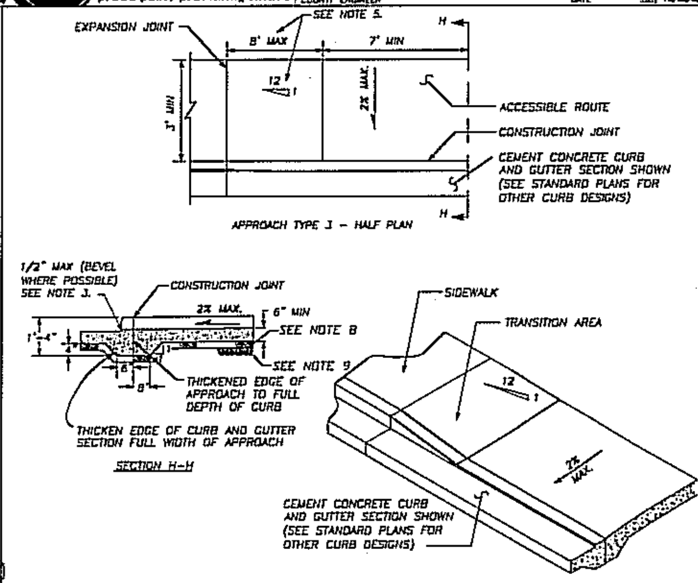

APPROACH TYPE 3 – HALF PLAN

SECTION H-H

APPROACH TYPE 3 – HALF ISOMETRIC

NOTES:

1. A MINIMUM 3' WIDE ACCESSIBLE ROUTE SHALL BE MAINTAINED IN ALL PEDESTRIAN ACCESSIBLE AREAS.
2. CONTRACTION JOINTS SHALL BE PLACED ALONG SIDEWALKS IN ACCORD WITH SIDEWALK DETAIL. ALL JOINTS SHALL BE CLEANED AND EDGED.
3. CHANGES IN LEVEL UP TO 1/4" MAY BE VERTICAL AND WITHOUT EDGE TREATMENT. CHANGES IN LEVEL BETWEEN 1/4" AND 1/2" SHALL BE BEVELED WITH A SLOPE NO GREATER THAN 2:1.
4. TRANSITION AREA TO BE SLOPED AT 1v TO 12h, UNLESS STREET GRADE WOULD CREATE A TRANSITION LENGTH GREATER THAN 8', THEN THE MAXIMUM LENGTH OF 8' GOVERNS SLOPE.
5. CEMENT CONCRETE APPROACHES SHALL BE CONSTRUCTED OF AIR-ENTRAINED CONCRETE CLASS 3000 AND MAY BE POURED INTEGRAL WITH CURB.
6. EXISTING CURB, GUTTER AND SIDEWALK TO BE SAWCUT AND REMOVED FOR INSTALLATION OF APPROACH.
7. COMMERCIAL DRIVEWAY REQUIRES REINFORCING STEEL (6"x6"x10 GA MESH) MIN. 3" COVER.
8. 3" DEPTH 3/4"-0 CRUSHED AGGREGATE BASE COMPACTED TO 95% OF MAX. DRY DENSITY.
9. SUBGRADE PREPARED PER WSDOT STD. SPEC. 2-06.3(1)

Department of Public Works — CEMENT CONCRETE APPROACH DETAIL – TYPE 3 — F16 — APPROVED — COUNTY ENGINEER

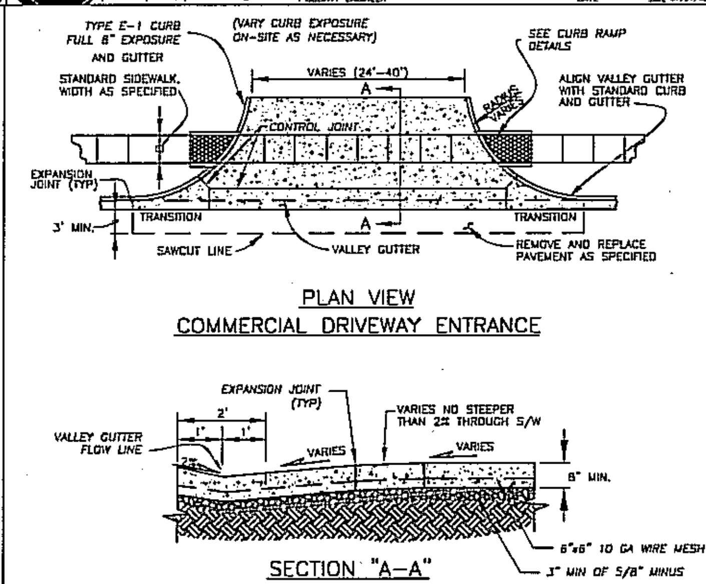

PLAN VIEW

COMMERCIAL DRIVEWAY ENTRANCE

SECTION "A–A"

NOTES:

1. CONCRETE SHALL BE 3300 PSI (MIN. BREAKING STRENGTH @ 28 DAYS) WITH 3" SLUMP (±1"). TOTAL AIR CONTENT (% BY VOLUME OF CONCRETE) SHALL NOT BE LESS THAN 4% OR MORE THAN 7%. MEDIUM BROOM FINISH PARALLEL TO DRIVEWAY CENTERLINE.
2. ALL JOINTS SHALL BE FINISHED WITH 1/4" RADIUS EDGE UNLESS OTHERWISE NOTED.
3. DRIVEWAYS EXCEEDING 15' IN TOTAL WIDTH SHALL HAVE ADDITIONAL LONGITUDINAL JOINTS AS DIRECTED. CONTROL JOINT SPACING SHALL NOT EXCEED 15'.
4. DRIVEWAY SHALL BE CONSTRUCTED WITH REINFORCING STEEL (6x6 10 GA WIRE MESH), MIN. 3" COVER.
5. ALL EXISTING EDGES SHALL BE SAW CUT.
6. 3" DEPTH 5/8"-0 CRUSHED AGGREGATE BASE COMPACTED TO 95% OF MAX. DRY DENSITY.
7. SUBGRADE PREPARATION PER WSDOT STD. SPEC. 2-06.3(1).
8. EXISTING CURB SHALL BE REMOVED TO EXISTING JOINT OR SAWCUT SUCH THAT 3' MIN. OF NEW STREET SECTION IS CONSTRUCTED ADJACENT TO NEW DRIVEWAY.
9. MAXIMUM 2% CROSS SLOPE ACROSS PEDESTRIAN CROSSING.
10. CURB RADIUS PER TABLES 40.350.030-2 THRU 6, OR AS APPROVED BY COUNTY ENGINEER.

Department of Public Works, CLARK COUNTY WASHINGTON — MAJOR COMMERCIAL CONCRETE APPROACH — F17 — APPROVED — COUNTY ENGINEER

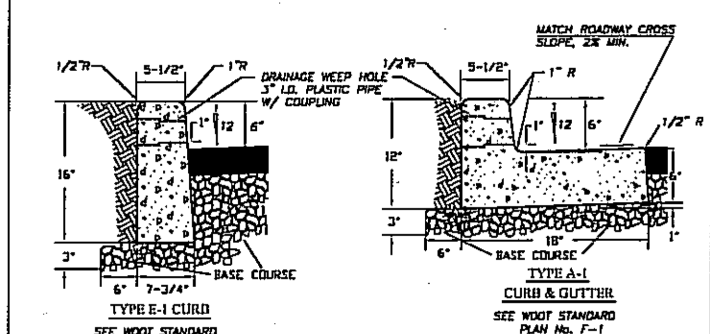

TYPE E-1 CURB — SEE WDOT STANDARD PLAN No. F-1

TYPE A-1 CURB & GUTTER — SEE WDOT STANDARD PLAN No. F-1

NOTES

1. CONCRETE SHALL BE 3000 PSI MIN. (CLASS 3000) 3 1/2" SLUMP (MAX.)
2. CURBS ADJACENT TO PAVEMENT OR SIDEWALK TO HAVE EXPANSION AND/OR CONTRACTION JOINTS TO MATCH EXISTING PATTERNS.
3. 3/8" EXPANSION JOINTS TO BE PROVIDED AT EACH POINT OF TANGENCY OF THE CURB, COLD JOINTS, EACH SIDE OF INLET STRUCTURES AND DRIVEWAYS. MATERIAL TO BE PRE-MOLDED, ASPHALT IMPREGNATED AND NON EXTRUDING.
4. CONTRACTION JOINT SPACING NOT TO EXCEED 15 FEET. THE DEPTH OF THE JOINT SHALL BE AT LEAST 1-1/2 INCHES. WEEP HOLES TO BE CENTERED WITH CONTRACTION JOINTS.
5. BASE COURSE SHALL BE TO SUBGRADE OF STREET SECTION OR 3 INCHES, WHICHEVER IS GREATER, AND SHALL EXTEND 6" BEHIND THE CURB.
6. DRAINAGE WEEP HOLES TO BE 3" I.D. PLASTIC PIPE WITH COUPLING. FINISH PIPE END FLUSH WITH FACE OF CURB.
7. GROUT ANY VOIDS IN CONCRETE SURROUNDING PIPE.
8. DRAINAGE ACCESS THROUGH EXISTING CURBS SHALL BE CORE DRILLED.
9. CURB TO BE BRUSH FINISHED. ALL EXISTING EDGES SHALL BE SAWCUT.
10. ALL MATERIALS AND WORKMANSHIP FOR TYPE E-1 & A-1 SHALL BE IN ACCORDANCE WITH WDOT STANDARD PLAN No. F-1, APPROVED 7/18/97 OR MOST CURRENT REVISION.

Department of Public Works, CLARK COUNTY WASHINGTON — CONCRETE CURBS — STANDARD F18 — APPROVED — COUNTY ENGINEER

CLARK COUNTY WASHINGTON — proud past, promising future

DESIGN & ENGINEERING DIVISION
DESIGN SECTION

KLINELINE BRIDGE REPLACEMENT
CLARK COUNTY
STANDARD TRANSPORTATION DETAILS

HOPPER DENNIS JELLISON P.L.L.C.
ENGINEERS · PLANNERS LANDSCAPE ARCHITECTS
314 W. 15th Street, Vancouver, WA 98660-2927
(360) 695-3488 (503) 924-4005 FAX (360) 695-8767
Internet: www.hdjengineers.com

CALL 48 HOURS BEFORE YOU DIG 1-800-553-4344 "It's the Law" NORTHWEST UTILITIES NOTIFICATION CENTER

DESIGNED	
DRAWN	
CRP	341322
HOR.	N/A
VERT.	N/A
DATE	JUN 2006
DWG:	D09
SHEET	27 OF

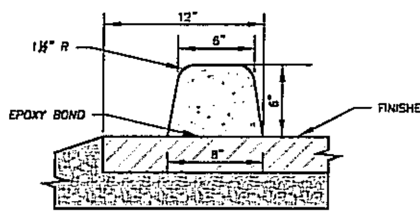

EXTRUDED CONCRETE BONDED CURB

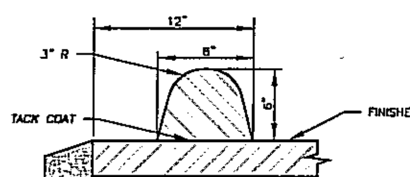

EXTRUDED AC BONDED CURB

NOTES:

1. *CONCRETE SHALL BE 3000 PSI MIN., (CL 3000) 3-1/2" SLUMP (MAX.).*
2. *THE EPOXY RESIN SYSTEM SHALL BE FURNISHED IN THE TYPE, GRADE, AND CLASS AS SPECIFIED ACCORDING TO CURRENT ASTM C 881.*
3. *CONCRETE CURBS ADJACENT TO PAVEMENT OR SIDEWALK TO HAVE EXPANSION AND/OR CONSTRUCTION JOINTS TO MATCH EXISTING PATTERNS.*
4. *FOR CONCRETE CURBS 3/8" EXPANSION JOINTS SHALL BE PLACED AT 45' MAXIMUM SPACING, ON BOTH SIDES OF CATCH BASINS, AT TOPS OF DRIVEWAYS, AND ALL CHANGES IN DIRECTION. 1 1/2" CONTRACTION JOINTS TO BE PLACED AT 10' INTERVALS.*
5. *USE OF EXTRUDED CURB REQUIRES PRE-APPROVAL BY COUNTY ENGINEER.*

NO.	REVISIONS	DATE	BY

Department of Public Works — CLARK COUNTY WASHINGTON — proud past, promising future

EXTRUDED CURBS — STANDARD F18a — APPROVED Pete Capell, COUNTY ENGINEER, 01/01/04 DATE

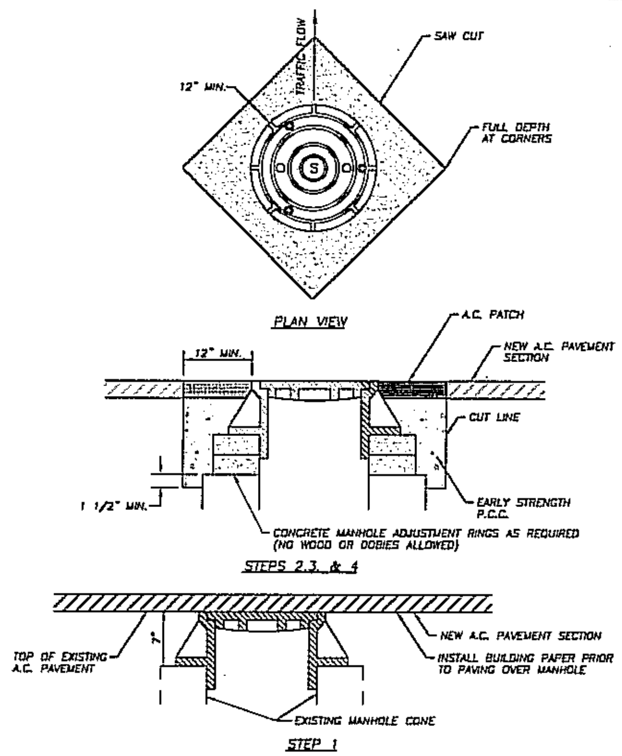

STEP 1 COVER EXSITING MANHOLE WITH BUILDING PAPER AND CONSTRUCT A.C. PAVEMENT OVER TOP OF MANHOLE.
STEP 2 SAW CUT AND REMOVE PAVEMENT AROUND MANHOLE 12" MIN. FROM MANHOLE FRAME.
STEP 3 RAISE MANHOLE FRAME AND COVER USING CONCRETE RINGS AND MECHANICAL ADJUSTMENT DEVICES TO FINISH GRADE MATCHING PROFILE AND CROSS SLOPE.
STEP 4 BACKFILL WITH EARLY STRENGTH P.C.C. AND A.C. TO DEPTHS AS DIRECTED.

NO.	REVISIONS	DATE	BY

Department of Public Works — CLARK COUNTY WASHINGTON

MANHOLE ADJUSTMENT DETAIL — F27 — APPROVED Pete Capell, COUNTY ENGINEER, 9/12/01 DATE

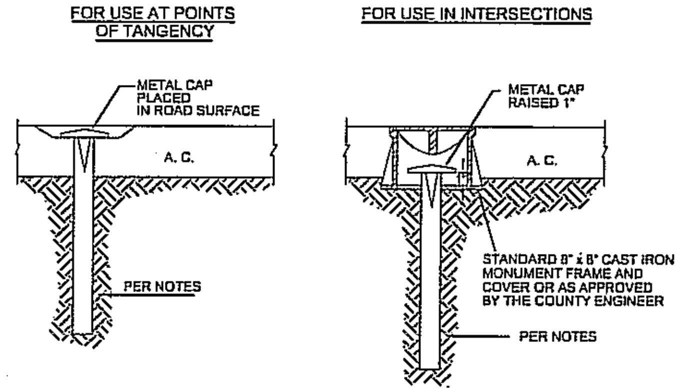

NOTES:

1. ALL MONUMENTS SHALL USE EITHER 5/8" DIAMETER x 30" LONG IRON ROD OR 3/4" DIAMETER x 30" LONG IRON PIPE.
2. ALL MONUMENTS SHALL BE IN ACCORDANCE WITH WAC 196-24-110 AND 332-120-060, AND MEET THE REQUIREMENTS OF THE RCW 58.17.240, 58.09.120 AND 58.09.130.

NO.	REVISIONS	DATE	BY

Department of Public Works — CLARK COUNTY WASHINGTON — proud past, promising future

CENTERLINE MONUMENTS — F28 — APPROVED Pete Capell, COUNTY ENGINEER, 01/01/04 DATE

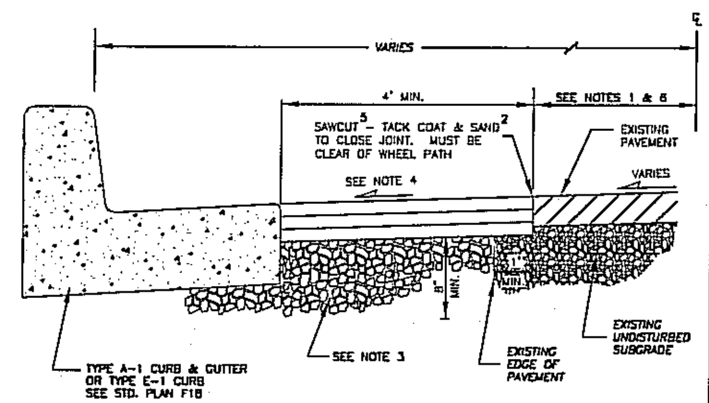

NOTES:

1. *WHERE FRONTAGE IMPROVEMENTS ARE REQUIRED, THE COUNTY WILL PERFORM PAVEMENT DEFLECTION TESTING TO DETERMINE THE EXTEND OF IMPROVEMENTS. SEE CCC 40.350.030(B)(5) FRONTAGE ROADS/IMPROVEMENTS.*
2. *THE EDGES OF ALL EXISTING ASPHALT SURFACES SHALL BE SAWCUT TO PROVIDE A STRAIGHT, CLEAN EDGE. A TACK COAT SHALL BE APPLIED PER THE STANDARD SPECIFICATIONS. ALL JOINTS SHALL BE SEALED WITH CRS-1 AND SANDED.*
3. *DEPTH OF ASPHALT CONCRETE PAVEMENT AND BASE ROCK OF THE RESTORED ROAD SECTION TO BE PER TYPICAL ROADWAY SECTION AS SHOWN IN THE TRANSPORTATION STANDARD DRAWINGS 1 THROUGH 27, OR AS APPROVED BY REVIEWING AUTHORITY. COMPACT SUBGRADE AND CRUSHED AGGREGATE TO 95% OF MAXIMUM DRY DENSITY.*
4. *MATCH EXISTING PAVEMENT SLOPE. NO FLATTER THAN 2% OR STEEPER THAN 4% WITHOUT SPECIFIC COUNTY APPROVAL.*
5. *SAWCUT AND REMOVE ANY EXISTING FAILING ASPHALT CONCRETE PAVEMENT.*
6. *SAWCUT, REMOVE AND RESTORE A MINIMUM OF 1' TO A MAXIMUM HALF STREET WIDTH OF THE EXISTING ROAD SECTION.*
7. *PAVE WITH MINIMUM OF 0.35 ft. MINIMUM COMPACTED DEPTH A.C.P., OR MATCH EXISTING OR DESIGN SECTION WHICHEVER IS GREATER.*
8. *LIFTS FOR A.C.P. (CLASS A) SHALL BE INSTALLED AT 0.15 ft. MINIMUM AND 0.35 ft. MAXIMUM FOR NON-SURFACE LIFTS, AND 0.25 ft. MAXIMUM FOR THE FINAL SURFACE LIFT. THE TEMPERATURE SHALL BE 250 DEGREE MINIMUM AND 350 DEGREE MAXIMUM, AND COMPACTED TO 92% OF THEORETICAL MAXIMUM.*

NO.	REVISIONS	DATE	BY

Department of Public Works — CLARK COUNTY WASHINGTON — proud past, promising future

PAVEMENT WIDENING (FRONTAGE IMPROVEMENT) — STANDARD F30 — APPROVED Pete Capell, COUNTY ENGINEER, 01/01/04 DATE

OPEN CUT UTILITY TRENCH BACKFILL DETAIL (COLLECTOR OR ARTERIAL)

SURFACING:

1. All A.C.P. shall be saw cut to provide a straight, clean edge prior to paving.
2. The cut line shall be one continuous straight line from the outer excavation limits of manhole, valve box, etc. to manhole, valve box, etc.
3. Pave with an 0.5 ft. minimum compacted depth A.C.P., or match existing or design section, whichever is greater.
4. Lifts for A.C.P. (Class A) shall be 0.15 ft. minimum and 0.35 ft. maximum for non-surface lifts (0.25' maximum for surface lift); the temperature shall be 250 degree minimum, 350 degree maximum, compacted to 92% of the theoretical maximum.
5. All joints shall be tacked, sealed and sanded.
6. Trench shall be plated until paved.
7. For longitudinal installation, full lane width including turn lanes restoration shall be required or as directed by Clark County. For transverse installation refer to surfacing restoration of detail U6. See Section 12.20A.120.C.

BASE COURSE:

1. 0.80 ft. minimum depth (1-1/4" minus) C.S.B.C. (W.S.D.O.T. approved material).
2. Compacted to 95% of maximum density. See trench zone.
3. Equivalent depth of A.T.B. may be substituted.
4. For transverse or diagonal trenches in existing roadway pavement, CDF will be used from the bottom of full pavement section to a maximum CDF section of 3 feet or to 6" above the top of the pipe, which ever is less. See note 13 of Std. Plan UCN of this Manual.

TRENCH ZONE:

1. Granular backfill as approved by local agency or W.S.D.O.T. specifications for granular backfill. Compacted to 95% of maximum density in the trench zone using Method C compaction as per Section 2-03.3(14)C.
2. Native material may be used if approved prior to construction by Clark County.
3. Trench zone width — see below.

PIPE ZONE:

1. Pipe zone material as specified by utility owner, and shall conform to section 9-03.12(3) WSDOT Specs.
2. 1.0 ft. max. from top of the pipe. 6" from top of pipe when CDF backfill used.

CONDITIONS:

1. A copy of the permit and requirements shall be on the job site at all times.
2. The permit holder shall be responsible for all restoration and maintenance of ditches, shoulders, driveways, landscaping, etc.
3. Call Clark County at 397-2446 twenty-four hours prior to commencing work.

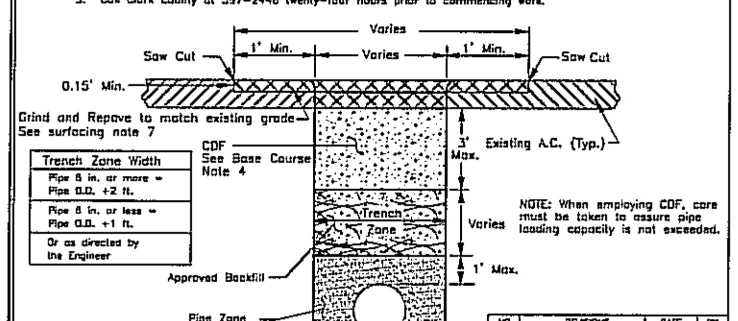

Department of Public Works — CLARK COUNTY WASHINGTON — proud past, promising future

OPEN CUT UTILITY TRENCH BACKFILL DETAIL COLLECTOR OR ARTERIAL ROADWAY — STANDARD U1 — APPROVED Pete Capell, COUNTY ENGINEER, 7/20/01 DATE

OPEN CUT UTILITY TRENCH BACKFILL DETAIL (COLLECTOR OR ARTERIAL ALTERNATE)

SURFACING:

1. All A.C.P. shall be sawcut to provide a straight, clean edge prior to paving.
2. The cut line shall be one continuous straight line from the outer excavation limits of manhole, valve box, etc. to manhole, valve box, etc.
3. Pave with 0.5 ft. minimum compacted depth A.C.P., or match existing or design section, whichever is greater.
4. Lifts for A.C.P. (Class A) shall be 0.15 ft. minimum and 0.35 ft. maximum for non-surface lifts (0.25' maximum for surface lift); the temperature shall be 250 degree minimum, 350 degree maximum, compacted to 92% of the theoretical maximum.
5. All joints shall be tacked, sealed and sanded.
6. Trench shall be plated until paved.
7. For longitudinal installation, full lane width including turn lanes restoration shall be required or as directed by Clark County. For transverse installation refer to surfacing restoration of detail U6. See Section 12.20A.120.C.

TRENCH ZONE:

1. Granular backfill as approved by local agency or W.S.D.O.T. specifications for granular backfill. Compacted to 95% of maximum density in the trench zone using Method C compaction as per Section 2-03.3 (14)C.
2. Premix concrete shall meet or exceed the requirements of W.S.D.O.T. 2-09.3 (1) E.
3. Trench zone width — see below.

PIPE ZONE:

1. Pipe zone material as specified by utility owner, and shall conform to section 9-03.12(3) WSDOT Specs.
2. 1.0 ft. max. from top of the pipe.

CONDITIONS:

1. A copy of the permit and requirements shall be on the job site at all times.
2. The permit holder shall be responsible for all restoration and maintenance of ditches, shoulders, driveways, landscaping, etc.
3. Call Clark County at 397-2446 twenty-four hours prior to commencing work.

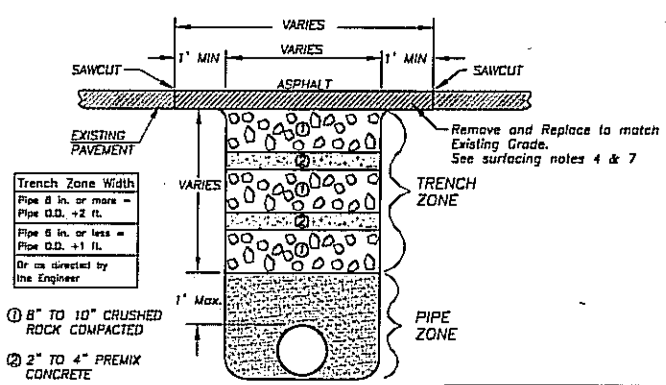

Department of Public Works — CLARK COUNTY WASHINGTON — proud past, promising future

OPEN CUT UTILITY TRENCH BACKFILL DETAIL COLLECTOR OR ARTERIAL ROADWAY (ALTERNATE) — STANDARD U2 — APPROVED Pete Capell, COUNTY ENGINEER, 5/4/01 DATE

OPEN CUT UTILITY TRENCH BACKFILL DETAIL (RESIDENTIAL)

SURFACING:

1. All A.C.P. shall be saw cut to provide a straight, clean edge prior to paving.
2. The cut line shall be one continuous straight line from the outer excavation limits of manhole, valve box, etc. to manhole, valve box, etc.
3. Pave with an 0.35 ft. minimum compacted depth A.C.P. or match existing, whichever is greater.
4. Lifts for A.C.P. (Class A) shall be an 0.15 ft. minimum and 0.35 ft. maximum for non-surface lifts (0.25' maximum for surface lift); the temperature shall be 250 degree minimum, 350 degree maximum, compacted to the satisfaction of the engineer.
5. All joints shall be tacked, sealed and sanded.
6. When surfacing exists on both sides of the trench, new A.C.P. will be a minimum of 48" wide.
7. Trench shall be plated until paved.

TOP COURSE:

1. 0.20 ft. minimum depth (5/8" minus) C.S.T.C. (W.S.D.O.T. approved material).
2. Compacted to 95% of maximum density. See trench zone.
3. Equivalent depth of A.T.B. may be substituted.

BASE COURSE:

1. 0.80 ft. minimum depth (1-1/4" minus) C.S.B.C. (W.S.D.O.T. approved material).
2. Compacted to 95% of maximum density. See trench zone.
3. Equivalent depth of A.T.B. may be substituted.

TRENCH ZONE:

1. Granular backfill as approved by local agency or W.S.D.O.T. specifications for granular backfill. Compacted to 95% of maximum density in the trench zone using Method C compaction as per Section 2-03.3 (14)C.
2. Native material may be used if approved prior to construction by Clark County.
3. Trench zone width — see below.

PIPE ZONE:

1. Pipe zone material as specified by utility owner, and shall conform to section 9-03.12(3) WSDOT Specs.
2. 1.0 ft. max. from top of the pipe.

CONDITIONS:

1. A copy of the permit and requirements shall be on the job site at all times.
2. The permit holder shall be responsible for all restoration and maintenance of ditches, shoulders, driveways, landscaping, ect.
3. All pavement cuts, at a min. be temp patched @ the end of each day w/perm patch to be done on the 1st suitable day.
4. Work shall be done in a timely manner to minimize the impact to the public.
5. Call Clark County at 397-2446 twenty-four hours prior to commencing work.

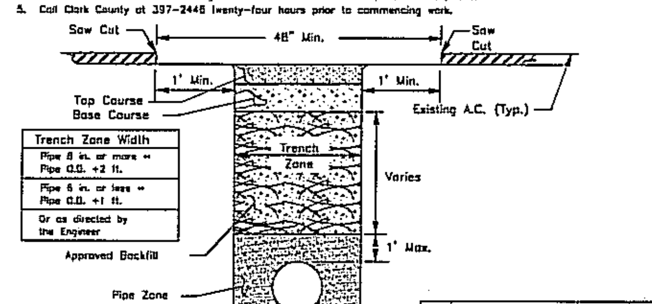

Department of Public Works — CLARK COUNTY WASHINGTON — proud past, promising future

OPEN CUT UTILITY TRENCH BACKFILL DETAIL RESIDENTIAL ROADWAY — STANDARD U3 — APPROVED Pete Capell, COUNTY ENGINEER, 5/4/01 DATE

CONCRETE ROADWAY

CEMENT CONCRETE PAVEMENT:

1. Early strength (3-day) cement concrete pavement per W.D.O.T. Standard Specifications section 5-05.
2. Doweled construction joints as per current W.D.O.T. Standard Plans.
3. Contraction joints to be sawed as per current W.D.O.T. Standard Plans.
4. Match existing depth (D=minimum of 6"), finish texture, and color.
5. Full panel restoration required, or as directed by Clark County.

TRENCH ZONE:

1. Granular backfill as approved by local agency or W.S.D.O.T. specifications for granular backfill. Compacted to 95% of maximum density in the trench zone using Method C compaction as per Section 2-03.3 (14)C.
2. Native material may be used if approved prior to construction by Clark County.
2. Trench zone width — see below.

PIPE ZONE:

1. Pipe zone material as specified by utility owner, and shall conform to section 9-03.12(3) WSDOT Specs.
2. 1.0 ft. max. from top of the pipe.

CONDITIONS:

1. A copy of the permit and requirements shall be on the job site at all times.
2. The permit holder shall be responsible for all restoration and maintence of ditches, shoulders, driveways, landscaping, ect.
3. Call Clark County at 397-2446 twenty-four hours prior to commencing work.

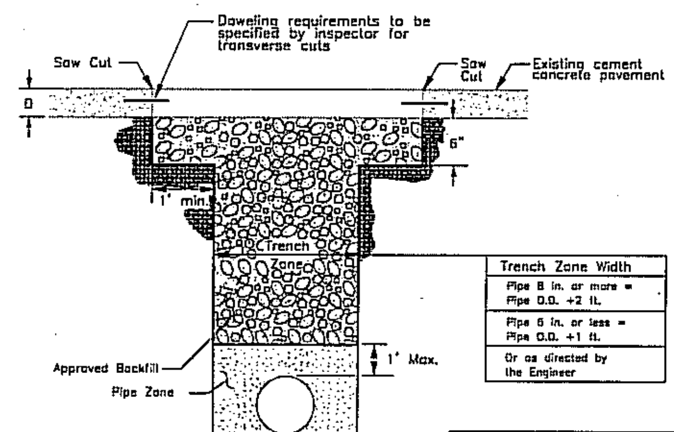

Department of Public Works — CLARK COUNTY WASHINGTON — proud past, promising future

CONCRETE ROADWAY — STANDARD U4 — APPROVED Pete Capell, COUNTY ENGINEER, 5/4/01 DATE

DESIGNED	
DRAWN	
CRP	341322
HOR.	N/A
VERT.	N/A
DATE	JUN 2006
DWG.	D10
SHEET	28 OF

CALL 48 HOURS BEFORE YOU DIG 1-800-553-4344 "It's the Law" NORTHWEST UTILITY NOTIFICATION CENTER

HOPPER DENNIS JELLISON P.L.L.C. ENGINEERS • PLANNERS LANDSCAPE ARCHITECTS

314 W. 15th Street Vancouver, WA 98660-2927 (360) 695-3488 (503) 921-4953 FAX (360) 695-8707

DESIGN & ENGINEERING DIVISION DESIGN SECTION

KLINELINE BRIDGE REPLACEMENT CLARK COUNTY STANDARD TRANSPORTATION DETAILS

CLARK COUNTY WASHINGTON proud past, promising future

ROADWAY SHOULDER
INCLUDES LAWN AND LANDSCAPE

SHOULDER ROCK:

1. 0.50 ft. minimum depth (1 1/4" minus) crushed rock. (Clark County Approved Material).
2. Compacted to 95% of maximum density. See trench zone.
3. Rock shall extend from E.O.P. to the back of trench at approx. .05 Ft./Ft. slope.

LAWN & LANDSCAPE AREAS:

1. A County approved top soil shall be placed 0.50 Ft. in depth.
2. Area to be restored to match existing.

TRENCH ZONE:

Where the distance from E.O.T. to E.O.P. is less than or equal to the depth of the trench; these conditions shall apply:

1. Granular backfill as approved by local agency or W.S.D.O.T. specifications for granular backfill. Compacted to 95% of maximum density in the trench zone using Method C compaction as per Section 2-03.3 (14)C.
2. Native material may be used if approved prior to construction.
3. Trench zone width — see below.
4. Shoulder rock or landscaped sections as applicable.

PIPE ZONE:

1. Pipe zone material as specified by utility owner, and shall conform to section 9-03.12(3) WSDOT Specs.
2. 1.0 ft. max. from top of the pipe.

CONDITIONS:

1. A copy of the permit and requirements shall be on the job site at all times.
2. The permit holder shall be responsible for all restoration and maintence of ditches, shoulders, driveways, landscaping, ect.
3. Call Clark County at 397-2446 twenty-four hours prior to commencing work.

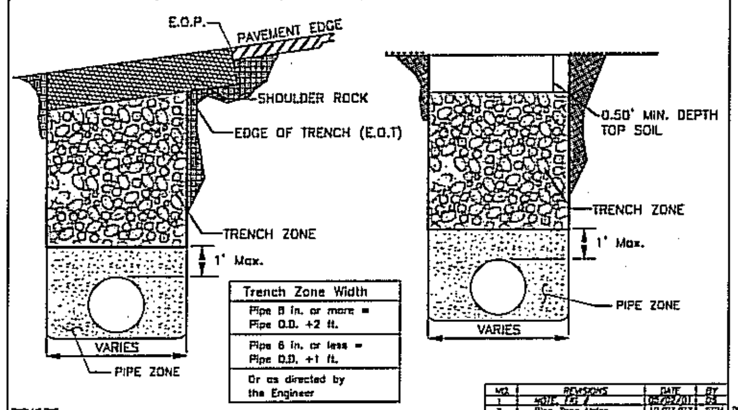

NO.	REVISIONS	DATE	BY
1	NOTE, FIG 2	05/02/01	DS
2	Pipe Zone Notes	10/07/02	SCH

DWG: U5.DWG

Department of Public Works — CLARK COUNTY WASHINGTON — proud past, promising future

ROADWAY SHOULDER INCLUDES LAWN & LANDSCAPE — STANDARD U5 — APPROVED — COUNTY ENGINEER — DATE 5/4/01 — PLAN No. — DESIGNED — DRAWN — DATE 04/23/03

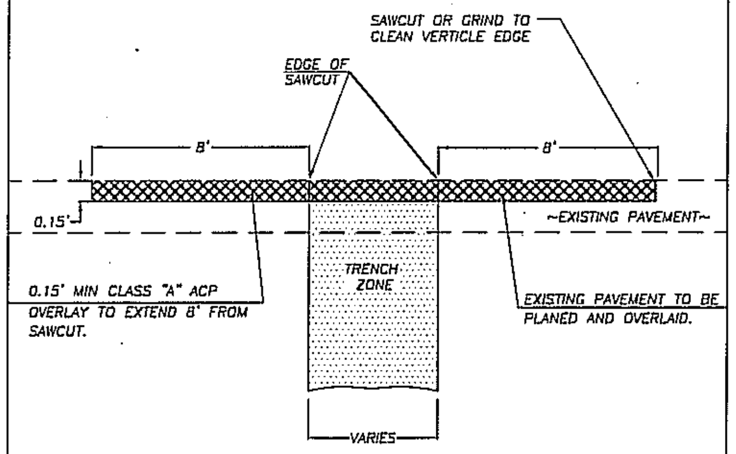

NOTE: THIS DETAIL IS TO BE USED ON URBAN ARTERIALS OR RURAL COLLECTORS OR PAVEMENT SURFACE RECONSTRUCTION AND/OR WHEN THE EXISTING ROADWAY IS LESS THAN 5 YEARS OLD.

SEE APPROPRIATE DETAIL FOR TRENCH ZONE RECONSTRUCTION REQUIREMENTS.

TO BE USED AS AN ALTERNATIVE IN LIEU OF FULL REMOVAL AND REPLACEMENT OF EFFECTED AREA AND APPROVED BY CLARK COUNTY.

NO.	REVISIONS	DATE	BY
1	NOTE	03/20/01	DS
2	FIG. 2	05/02/01	DS
3	CHANGED ACP CLASS	03/28/02	KB
4	CHANGE EXTEND OF OVERLAY	07/07/03	SCH

DWG: U6.DWG

Department of Public Works — CLARK COUNTY WASHINGTON — proud past, promising future

PAVEMENT SURFACE RECONSTRUCTION ALTERNATE FOR TRANSVERSE CUTS — STANDARD U6 — APPROVED — COUNTY ENGINEER — DATE 9/20/01 — PLAN No. — DESIGNED — DRAWN — DATE 3/28/02

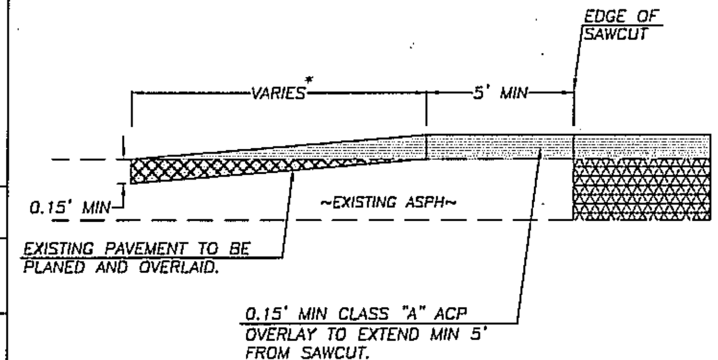

* LENGTH VARIES TO MAKE SMOOTH TRANSITION TO EXISTING ROAD GRADE. (MINIMUM 15 FEET)

TO BE USED AS AN ALTERNATIVE IN LIEU OF FULL LANE REMOVAL AND REPLACEMENT WHEN APPROVED BY CLARK COUNTY.

NO.	REVISIONS	DATE	BY
1	NOTE	03/20/01	DS
2	FIG 2	05/02/01	DS
3	CHANGED ACP CLASS	03/28/02	KB

DWG: U7.DWG

Department of Public Works — CLARK COUNTY WASHINGTON — proud past, promising future

BUTT JOINT PLANING AND OVERLAY DETAIL — STANDARD U7 — APPROVED — COUNTY ENGINEER — DATE 9/30/01 — PLAN No. — DESIGNED — DRAWN — DATE 3/28/02

STANDARD TRENCH RESTORATION NOTES:

1. UNLESS OTHERWISE EXEMPTED IN CCC 12.20A.070.F, A WRITTEN UTILITY PERMIT SHALL BE REQUIRED FOR EACH CONSTRUCTION ACTIVITY WITHIN EXISTING COUNTY ROAD RIGHT-OF-WAY TO INSTALL, MOVE OR REPAIR A UTILITY INCLUDING PRIVATE LINES. NO WORK MAY COMMENCE PRIOR TO PERMIT APPROVAL BY THE COUNTY. OFF-SITE UTILITY CONSTRUCTION WORK THAT IS BEING DONE UNDER A GENERAL DEVELOPMENT PERMIT WILL REQUIRE A SEPARATE UTILITY PERMIT. SEE CCC 13.12A AND 12.20A FOR UTILITY PERMIT REQUIREMENTS.

2. BEFORE ANY CONSTRUCTION WORK WITHIN THE RIGHT-OF-WAY MAY COMMENCE, A SURETY BOND (OR OTHER INSTRUMENT ACCEPTABLE TO THE COUNTY) IN AN AMOUNT REQUIRED BY THE COUNTY, BUT NOT LESS THAN $1,000, WRITTEN BY A SURETY COMPANY AUTHORIZED TO DO BUSINESS IN WASHINGTON, MAY BE REQUIRED BY THE COUNTY TO INSURE COMPLETION OF CONSTRUCTION, INCLUDING RESTORATION OF SURFACING, SLOPES, SLOPE TREATMENT, TOPSOIL, LANDSCAPE TREATMENT, DRAINAGE FACILITIES AND CLEANUP OF RIGHT-OF-WAY FOR A PERIOD ENDING NOT MORE THAN 2 YEARS AFTER DATE OF COMPLETION. SEE CCC 12.20A.070.C(2)

3. ALL MATERIALS AND WORKMANSHIP SHALL BE IN CONFORMANCE WITH THE STANDARD SPECIFICATIONS FOR ROAD, BRIDGE, AND MUNICIPAL CONSTRUCTION PREPARED BY THE WASHINGTON STATE CHAPTER OF THE AMERICAN PUBLIC WORKS ASSOCIATION (APWA) AND THE WASHINGTON STATE DEPARTMENT OF TRANSPORTATION (WSDOT) AND SHALL COMPLY WITH THE CURRENT EDITION, EXCEPT WHERE OTHERWISE NOTED IN CCC 12.20A. AND THESE STANDARD PLANS.

4. THE RIGHT-OF-WAY RESTORATION SHALL CONFORM TO COUNTY STANDARDS AND POLICIES AND APPLICABLE STATE AND FEDERAL LAWS, OR THE WORK SHALL BE REJECTED. THE COST ASSOCIATED WITH ALL WORK AND MATERIALS NECESSARY TO OBTAIN COMPLIANCE SHALL BE THE RESPONSIBILITY OF THE PERMIT APPLICANT.

5. UNDERGROUND UTILITY INSTALLATION SHALL CONFORM TO CCC 12.20A.080.F, AND SHALL PROVIDE FOR RESTORATION OF THE PAVEMENT, PAVED SHOULDERS, CURBS AND GUTTERS, AND SIDEWALKS IN ACCORDANCE WITH CCC 12.20A.120, UNLESS OTHERWISE MODIFIED BY THE UTILITY PERMIT.

6. TRENCH BACKFILL AND RESURFACING SHALL BE AS SHOWN IN THE STANDARD DETAILS, UNLESS MODIFIED BY THE UTILITY PERMIT. SURFACING DEPTHS AND PAVING LIMITS SHOWN IN THE STANDARD PLANS ARE MINIMUMS AND MAY BE INCREASED BY THE COUNTY ENGINEER TO MEET TRAFFIC LOADINGS OR SITE CONDITIONS.

7. THE FINAL PAVEMENT PATCH SHALL BE COMPLETED AT THE FIRST POSSIBLE OPPORTUNITY, AND NOT TO EXCEED THIRTY (30) DAYS AFTER FIRST OPENING THE TRENCH. THIS TIME FRAME MAY BE ADJUSTED IF DELAYS ARE DUE TO INCLEMENT WEATHER, OR OTHER ADVERSE CONDITIONS. HOWEVER, DELAYING OF FINAL PATCH OR OVERLAY WORK IS ALLOWABLE ONLY WHEN APPROVED BY THE COUNTY ENGINEER. THE COUNTY ENGINEER MAY DEEM IT NECESSARY TO COMPLETE THE WORK WITHIN THIRTY (30) DAYS TIME FRAME AND NOT ALLOW ANY TIME EXTENSION. IF THIS OCCURS, THE CONTRACTOR SHALL PERFORM THE NECESSARY WORK AS DIRECTED BY THE ENGINEER.

8. WHEN TRENCHING WITHIN THE ROADWAY SHOULDERS, THE SHOULDER SHALL BE RESTORED AS SHOWN IN STANDARD PLAN #U5.

9. IT IS THE COUNTY'S BASIC POLICY THAT NO PAVEMENTS SHALL BE CUT FOR A PERIOD OF FIVE (5) YEARS AFTER THE PAVEMENT HAS BEEN CONSTRUCTED, OVERLAID OR SEAL-COATED AND THAT CUTTING OF ANY PAVED ROAD IS DISCOURAGED. UNTRENCHED CONSTRUCTION METHODS MUST BE EXPLORED ON ALL PAVED ROAD CROSSINGS REGARDLESS OF CONDITION OF THE ROAD PAVEMENT. A CURRENT LIST OF ROAD SEGMENTS AFFECTED BY THIS PROHIBITION CAN BE SUPPLIED UPON REQUEST.

10. WHEN ROADWAY SURFACES ARE WINDOWED AND POTHOLED, AND WHERE URBAN ARTERIALS OR RURAL COLLECTORS MUST BE TRANSVERSELY TRENCHED, CONTROL DENSITY FILL (CDF) SHALL BE USED FOR THE TOP 3 FEET OF THE BACKFILL (SEE CCC 12.20A.080.K,L). WHEN EMPLOYING CDF, CARE MUST BE TAKEN TO ASSURE PIPE LOADING CAPACITY IS NOT EXCEEDED.

11. AS A CONDITION OF CCC 12.20A, IT IS THE RESPONSIBILITY OF THE PERMIT APPLICANT TO PROVIDE 24 HOUR NOTIFICATION PRIOR TO COMMENCING PROPOSED CONSTRUCTION ACTIVITIES WITHIN THE LIMITS OF THE COUNTY RIGHT-OF-WAY. FAILURE TO COMPLY SHALL RESULT IN THE DISCONTINUING OF THE PERMITTED CONSTRUCTION ACTIVITY FOR A PERIOD OF AT LEAST 24 HOURS.

12. FINAL RESTORATION SHALL BE COMPLETED IN A MANNER THAT PROVIDES THE AREA OF CONSTRUCTION TO BE RESTORED IN AN EQUALLY AS GOOD OR BETTER CONDITION THAN THE EXISTING CONDITION OF THE COUNTY RIGHT-OF-WAY.

PAGE 1 OF 3

NO.	REVISIONS	DATE	BY
1	ADD 13 & GRADING NOTES	12/9/03	SCH

DWG: UGN.DWG

Department of Public Works — CLARK COUNTY WASHINGTON — proud past, promising future

STANDARD TRENCH RESTORATION, GRADING, AND SIGNING & STRIPING NOTES — STANDARD UGN — APPROVED — COUNTY ENGINEER — DATE 01/01/04 — PLAN No. — DESIGNED SCH — DRAWN SCH — DATE 12/01/03

STANDARD TRENCH RESTORATION NOTES (CONT.):

13. CONTROL DENSITY FILL (CDF) SHALL CONSIST OF A MIXTURE OF PORTLAND CEMENT, FLY ASH, AGGREGATE, WATER AND ADMIXTURES PROPORTIONED TO PROVIDE A NON-SEGREGATING, NON-SETTLING FILL PRODUCING UNCONFINED COMPRESSIVE 28 DAY STRENGTHS FROM 50 PSI TO A MAXIMUM OF 150 PSI.
    - a.) THE CONTROL DENSITY FILL (CDF) MIX DESIGN SHALL BE FROM AN APPROVED SOURCE.
    - b.) THE CONTRACTOR SHALL SUBMIT THE MIX DESIGN ONE WEEK MINIMUM PRIOR TO INTENDED USE FOR REVIEW AND APPROVAL. ALTERNATIVELY THE CONTRACTOR MAY PROVIDE THE SUPPLIER AND MIX NUMBER IF THE CDF MIX HAS BEEN APPROVED WITHIN THE PREVIOUS 12 MONTHS.
    - c.) THE CONTRACTOR WILL PROVIDE BATCH WEIGHTS SHOWING THE AMOUNTS OF ALL INGREDIENTS IN THE MIX, BATCH TIME, AND THE TOTAL AMOUNT OF THE BATCH.
    - d.) CONTROL DENSITY FILL SHALL BE PERFORMANCE BASED AND MEET THE FOLLOWING CRITERIA:
        - THE CDF MIXTURE SHALL BE FLOWABLE NON-SEGREGATING AND SELF LEVELING
        - CAN BE PAVED ON WITHIN 48 HOURS UNLESS OTHERWISE APPROVED
        - TYPE F FLYASH: 200 LBS MINIMUM
        - TYPE I OR II CEMENT: 50 LBS MINIMUM
        - SETTLING SHALL BE LESS THAN 1/8" PER FOOT DEPTH
        - SHALL BE MACHINE DIGABLE UNLESS NOTED OTHERWISE
        - FINE AGGREGATE (LESS THAN 3/8") SHALL BE USED UNLESS OTHERWISE APPROVED
        - CONCRETE UNIT WEIGHT SHALL BE 100 PCF MINIMUM
    - e.) CDF SHALL NOT BE PLACED ON FROZEN GROUND. CDF PATCHING, MIXING AND PLACING MAY BE STARTED IF WEATHER CONDITIONS ARE FAVORABLE, WHEN THE TEMPERATURE IS AT 34-DEGREES F AND RISING. AT THE TIME OF PLACEMENT, CDF MUST HAVE A TEMPERATURE OF AT LEAST 40-DEGREES F. MIXING AND PLACING SHALL STOP WHEN THE TEMPERATURE IS 38-DEGREES F OR LESS AND FALLING. EACH FILLING STAGE SHALL BE AS CONTINUOUS AN OPERATION AS POSSIBLE.
    - f.) TRENCH SECTION TO BE FILLED WITH CDF SHALL BE CONTAINED AT EITHER END OF THE TRENCH SECTION BY BULKHEADS OR EARTH FILL.
    - g.) DURING CDF CURE TIME CONTRACTOR SHALL INSTALLED STEEL PLATES OR OTHER PROTECTIVE DEVICES WHICH WILL ALLOW FOR THE PASSAGE AND SAFETY OF TRAFFIC WITH NO LOAD TRANSFERRED TO THE CDF.
    - h.) CONTRACTOR SHALL ALLOW FOR A MINIMUM 48 HOUR CURE TIME FOR CDF PRIOR TO PLACING ASPHALT.
    - i.) 30-INCH DEPTH OF CDF MAY BE REDUCED IF CONFLICTING WITH PIPE ZONE BACKFILL.

STANDARD GRADING NOTES:

1. IF EARLY GRADING ACTIVITY IS APPROVED, IT IS TO BE PERFORMED AT APPLICANTS RISK.

2. FILL/GRADING SHALL BE PERFORMED IN COMPLIANCE WITH APPENDIX CHAPTER 33 OF THE UNIFORM BUILDING CODE (UBC).

3. ALL SUBGRADE UNDER PAVED SURFACES, CURBS, BUILDINGS, FOOTINGS, SLABS AND CONCRETE WALKS SHALL BE COMPACTED TO 95% OF MAXIMUM RELATIVE DENSITY OR AS SPECIFIED BY THE PROJECT GEOTECHNICAL ENGINEER. WHERE FILLING IS REQUIRED, THE FILL MATERIAL SHALL BE PLACED IN 8" LIFTS WITH EACH LIFT BEING COMPACTED TO 95% OF MAXIMUM RELATIVE DENSITY OF THE FILL MATERIAL BEFORE THE NEXT LIFT OR FINISHED SURFACE IS PLACED. WHERE FILLING IS REQUIRED OUTSIDE THE ABOVE-MENTIONED STRUCTURAL AREAS, COMPACTION REQUIREMENTS SHALL BE 90% OF MAXIMUM RELATIVE DENSITY. PROJECT GEOTECHNICAL ENGINEER SHALL SUBMIT COMPACTION TEST RESULTS TO COUNTY INSPECTOR FOR PROPER CERTIFICATION OF FILL PLACEMENT.

4. UNDER WET WEATHER CONDITIONS (OCT – APR) SUBGRADE THAT CAN NOT MEET COMPACTION MAY REQUIRE ADDITIONAL TESTING TO DETERMINE THE DEPTH OF OVER EXCAVATION, ADDITIONAL AGGREGATE AND GEOTEXTILE TO BE INSTALLED. UPON INSPECTION OF THE SUBGRADE, THE COUNTY INSPECTOR MAY REQUEST A GEOTECHNICAL ENGINEER TO SUBMIT AN ALTERNATE WET WEATHER STREET SECTION FOR REVIEW AND APPROVAL BY ENGINEERING SERVICES.

PAGE 2 OF 3

NO.	REVISIONS	DATE	BY
1	ADD 13 & GRADING NOTES	12/9/03	SCH

DWG: UGN.DWG

Department of Public Works — CLARK COUNTY WASHINGTON — proud past, promising future

STANDARD TRENCH RESTORATION, GRADING, AND SIGNING & STRIPING NOTES — STANDARD UGN — APPROVED — COUNTY ENGINEER — DATE 01/01/04 — PLAN No. — DESIGNED SCH — DRAWN SCH — DATE 12/01/03

STANDARD SIGNING & STRIPING NOTES:

1. THE STRIPING AND PAVEMENT MARKING REMOVAL PROCESS SHALL CONFORM TO WSDOT "STANDARD SPECIFICATIONS FOR ROAD, BRIDGE AND MUNICIPAL CONSTRUCTION" SECTION 8-22.3(6). THE COUNTY'S ACCEPTED PRACTICE OF REMOVAL OF EXISTING PAINTED PAVEMENT MARKING IS BY SHOT BLASTING. ALL OTHER MARKINGS ARE REMOVED BY GRINDING. THE CONTRACTOR SHALL HAVE A WRITTEN APPROVAL BY THE ENGINEER FOR ANY OTHER METHOD OF REMOVAL.

2. THE CONTRACTOR SHALL MAINTAIN EXISTING PERMANENT SIGNING IN ACCORDANCE WITH WSDOT "STANDARD SPECIFICATIONS FOR ROAD, BRIDGE AND MUNICIPAL CONSTRUCTION" SECTION 1-07.23(1).

3. FOR PRIVATE DEVELOPMENT PROJECTS ITEM 3 AND 4 OF WSDOT STANDARD SPECIFICATIONS 1-07.23(1) SHALL BE MODIFIED TO REPLACE THE TERM "CONTRACTING AGENCY" WITH THE TERM "CONTRACTOR".

4. THE CONTRACTOR SHALL PROVIDE TEMPORARY PAVEMENT MARKINGS IN ACCORDANCE WITH WSDOT "STANDARD SPECIFICATIONS FOR ROAD, BRIDGE AND MUNICIPAL CONSTRUCTION" SECTION 8.23.

5. INSTALLATION OF ALL NEW AND RELOCATION OF EXISTING TRAFFIC CONTROL DEVICES, INCLUDING TYPE III BARRICADE, WILL BE PERFORMED BY CLARK COUNTY PUBLIC WORKS AFTER THE PLAT IS RECORDED. ACTUAL COST OF ALL WORK PERFORMED AND MATERIALS INSTALLED WILL BE REIMBURSED BY THE APPLICANT. THE CONTRACTOR SHALL MAINTAIN TEMPORARY SIGNS, STRIPING AND PAVEMENT MARKINGS UNTIL THE COUNTY PERFORMS SAID WORK.

PAGE 3 OF 3

NO.	REVISIONS	DATE	BY
1	ADD 13 & GRADING NOTES	12/9/03	SCH

DWG: UGN.DWG

Department of Public Works — CLARK COUNTY WASHINGTON — proud past, promising future

STANDARD TRENCH RESTORATION, GRADING, AND SIGNING & STRIPING NOTES — STANDARD UGN — APPROVED — COUNTY ENGINEER — DATE 01/01/04 — PLAN No. — DESIGNED SCH — DRAWN SCH — DATE 12/01/03

DESIGNED
DRAWN
CRP 341322
HOR. N/A
VERT. N/A
DATE JUN 2006
DWG: D11
SHEET 29 OF

CALL 48 HOURS BEFORE YOU DIG 1-800-553-4344 "It's the Law" NORTHWEST UTILITIES NOTIFICATION CENTER

HOPPER DENNIS JELLISON P.L.L.C. ENGINEERS · PLANNERS LANDSCAPE ARCHITECTS
314 W. 15th Street Vancouver, WA 98660-2927 Internet: www.hdjengineers.com (360) 695-3488 (503) 223-4013 FAX (360) 693-8767

DESIGN & ENGINEERING DIVISION
DESIGN SECTION

KLINELINE BRIDGE REPLACEMENT
CLARK COUNTY
STANDARD TRANSPORTATION DETAILS

CLARK COUNTY WASHINGTON — proud past, promising future

FED AID # BRM-4253 (012)

CURVE DATA						
ID	P.I. STATION	Δ	RADIUS	TANGENT	LENGTH	BK TANGENT BRG
1	20+26.21	15°43'34"	1200'	165.73'	329.37'	N 3°37'54" E
2	24+02.63	6°52'41"	1200'	72.11'	144.05'	N 12°5'40" W

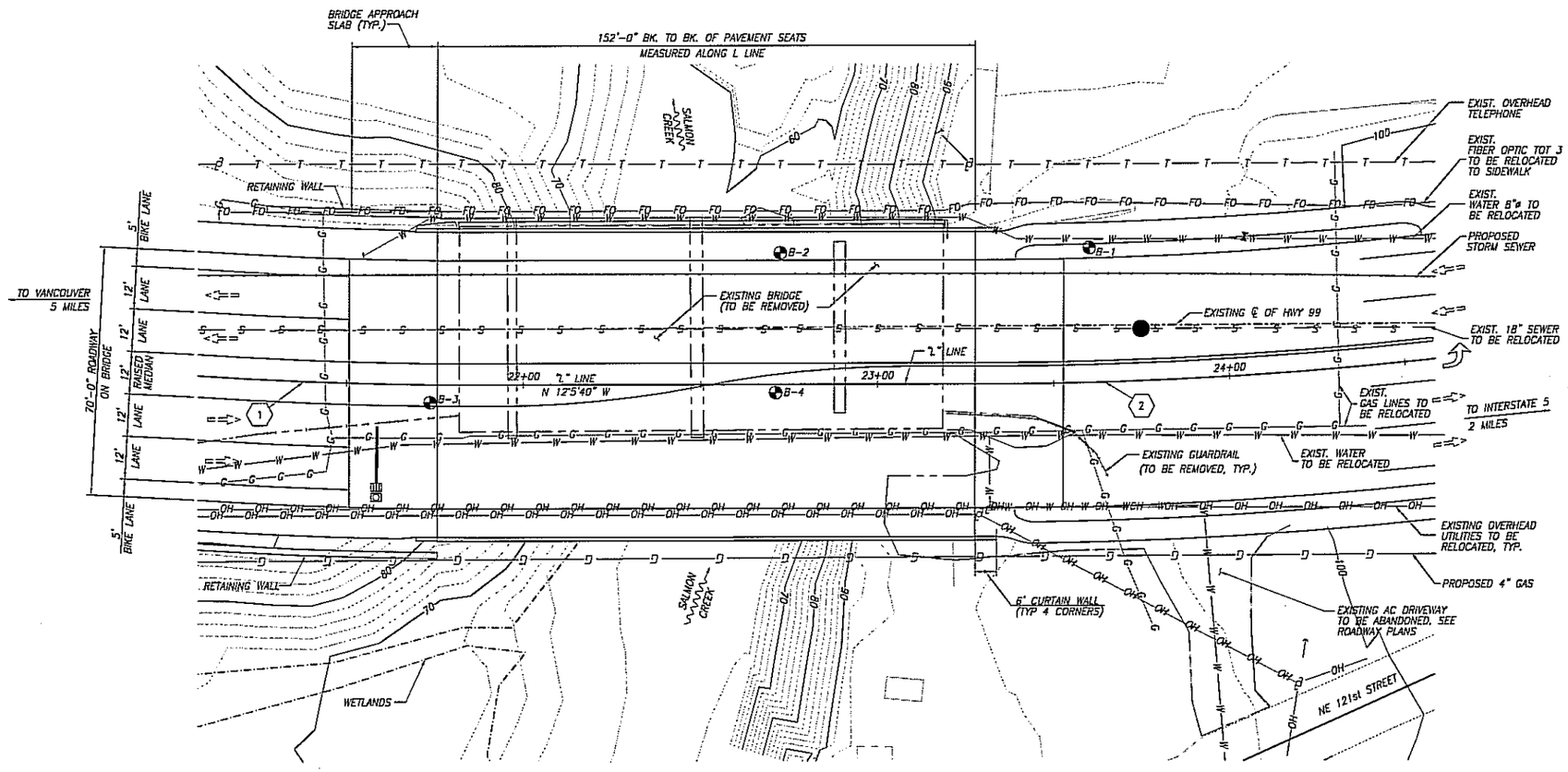

BRIDGE PLAN
1"=20'-0"

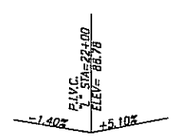

L LINE PROFILE

DATUM
NAVD 1988

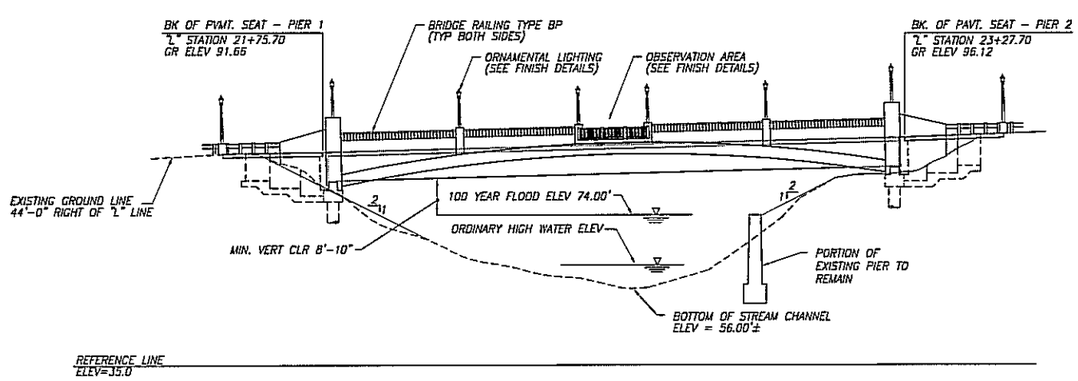

BRIDGE ELEVATION
1"=20'-0"

CLARK COUNTY HWY 99

BRIDGE GENERAL NOTES

1. ALL MATERIAL AND WORK SHALL BE IN ACCORDANCE WITH THE REQUIREMENTS OF THE WASHINGTON STATE DEPARTMENT OF TRANSPORTATION, "STANDARD SPECIFICATIONS FOR ROAD, BRIDGE AND MUNICIPAL CONSTRUCTION" 2006 EDITION PLUS AMENDMENTS.
2. THIS STRUCTURE HAS BEEN DESIGNED IN ACCORDANCE WITH THE REQUIREMENTS FOR LOAD & RESISTANCE FACTOR DESIGN, "AASHTO STANDARD SPECIFICATIONS FOR HIGHWAY BRIDGES." 2004, THIRD EDITION. LOADING IS HL-93. GIRDERS HAVE ALSO BEEN DESIGNED FOR A 1.5" FUTURE ASPHALT OVERLAY. SEISMIC DESIGN CRITERIA: a = 0.22 (ACCELERATION) s = 1.2 (SITE COEFFICIENT)
3. UNLESS OTHERWISE SHOWN ON PLANS, CONCRETE COVER MEASURED FROM FACE OF CONCRETE TO THE FACE OF ANY REINFORCEMENT BAR SHALL BE 2" MINIMUM.
4. ALL DIMENSIONS SHOWN ARE MEASURED HORIZONTALLY OR VERTICALLY UNLESS NOTED OTHERWISE.
5. CONSTRUCTION JOINTS WILL BE PERMITTED ONLY AT THE LOCATIONS SHOWN ON THE PLANS OR AS APPROVED BY THE ENGINEER
6. CONCRETE CLASS:
   ROADWAY DECK – CLASS 4000D
   FOOTINGS, DIAPHRAGMS, APPROACH SLAB, WINGWALLS – CLASS 4000
   TRAFFIC BARRIER, SIDEWALK ON BRIDGE – CLASS 4000 LS
   DRILLED SHAFTS–CLASS 4000P
7. USE ANTIGRAFITTI WATER SEALANT ON ALL EXPOSED CONCRETE AND MASONRY SURFACES, HORIZONTAL AND VERTICAL.
8. FOR PRESTRESSING NOTES SEE PRESTRESSED CONCRETE GIRDER SHEET B10.

LEGEND

- UTILITY POLE–EXISTING
- POLE ANCHOR–EXISTING
- OH — OVERHEAD UTILITY–EXISTING
- T — TELEPHONE–EXISTING
- FO — FIBER OPTIC–EXISTING
- G — GASLINE–EXISTING
- G — GASLINE–PROPOSED
- W — WATERLINE–EXISTING
- D — STORM–EXISTING
- S — SANITARY SEWER–EXISTING
- GAURDRAIL–EXISTING
- BORING LOCATION
- EXISTING STRUCTURE
- X — FENCE–EXISTING
- WATERVALVE–EXIST
- T — TELEPHONE PEDESTAL EXIST
- MANHOLE–EXISTING
- INLET–EXISTING
- SEWER–PROPOSED
- INLET–PROPOSED
- MANHOLE–PROPOSED

HWY 99 BRIDGE DRAWING LIST

B1	LAYOUT PLAN
B2	BRIDGE CONSTRUCTION STAGING 1 OF 2
B3	BRIDGE CONSTRUCTION STAGING 2 OF 2
B4	FOUNDATION LAYOUT
B5	SHAFT DETAILS
B6	ABUTMENT 1 LAYOUT
B7	ABUTMENT 2 LAYOUT
B8	FRAMING PLAN
B9	TYPICAL SECTION
B10	PRESTRESSED CONCRETE GIRDER DETAILS 1 OF 2
B11	PRESTRESSED CONCRETE GIRDER DETAILS 2 OF 2
B12	END DIAPHRAGM ON GIRDER DETAILS
B13	PEDESTRIAN BARRIER DETAILS 1 OF 3
B15	PEDESTRIAN BARRIER DETAILS 3 OF 3
B16	BRIDGE RAIL TYPE BP DETAILS 1 OF 2
B17	BRIDGE RAIL TYPE BP DETAILS 2 OF 2
B18	APPROACH SLAB AND COMPRESSION SEAL DETAILS
B19	BRIDGE REMOVAL
B20	FINISH ELEVATION

PRECAST PRESTRESSED CONCRETE I-GIRDER (W83G)
LOADING: HL-93

50% SUBMITTAL

DESIGNED	GD, DS
DRAWN	JP, TR
CRP	341322
HOR.	AS NOTED
VERT.	AS NOTED
DATE	6/12/06
DWG:	B1
SHEET 32	OF

CALL 48 HOURS BEFORE YOU DIG 1-800-553-4344 "It's the Law" NORTHWEST UTILITIES NOTIFICATION CENTER

DONALD L. SUBKOWSKI P.E. STATE OF WASHINGTON 20136 REGISTERED PROFESSIONAL ENGINEER

DATES OCT. 22, 2006

ENGINEERING PROGRAM
DESIGN SECTION

KLINELINE BRIDGE
LAYOUT PLAN

proud past, promising future

CLARK COUNTY WASHINGTON

Plotted on Jun 13, 2006 - 9:27am, Modified 06-12-06
H:\Project-Files\2005\05198 - Kline Bridge Replacement\MultiCAD FILES\ B1

FED AID # BRM-4253 (012)

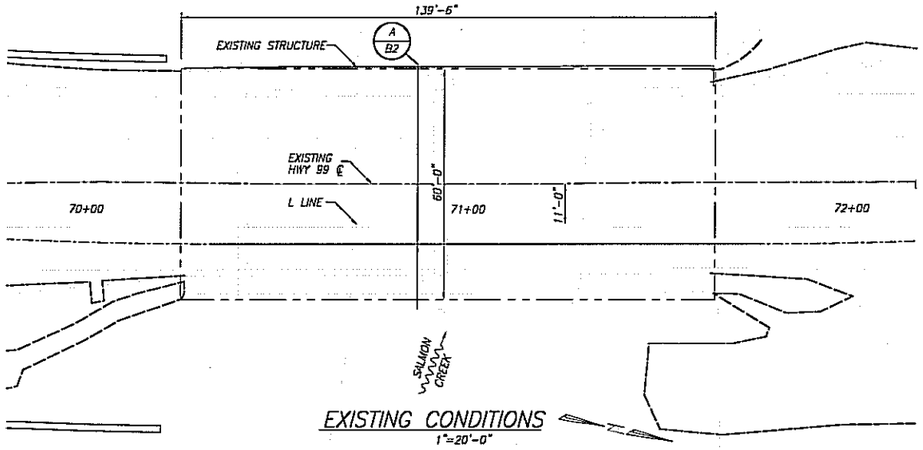

EXISTING CONDITIONS
1"=20'-0"

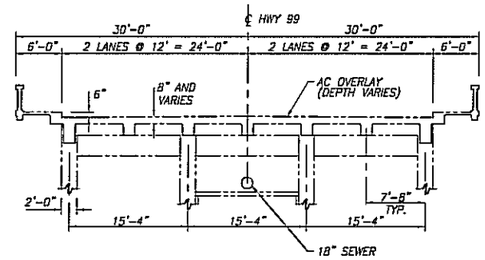

A / B2 SECTION
1"=10'-0"

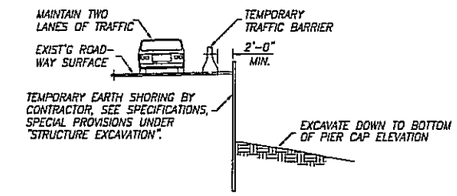

D / B2 SECTION
1:10

LEGEND

- INDICATES DIRECTION OF FLOW
- DENOTES DIRECTION OF TRAFFIC
- EXISTING STRUCTURE
- STRUCTURE REMOVAL
- NEW CONSTRUCTION

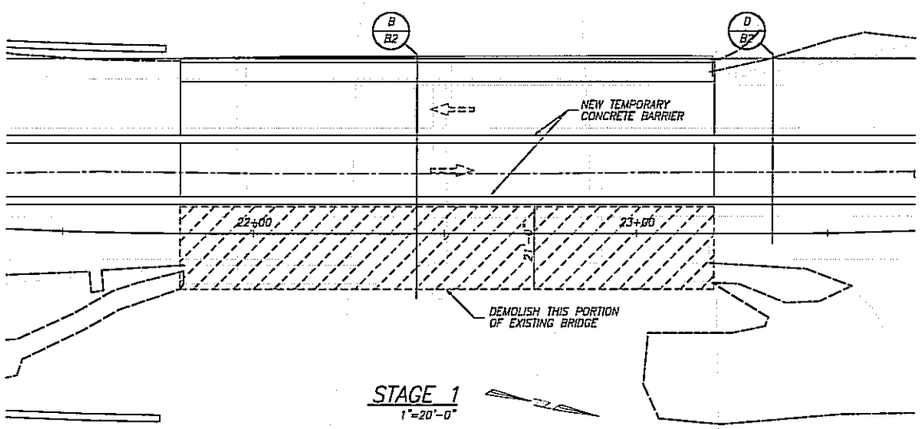

STAGE 1
1"=20'-0"

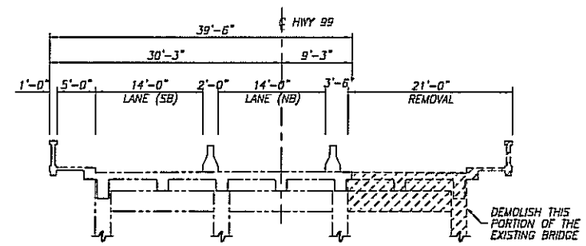

B / B2 SECTION
1"=10'-0"

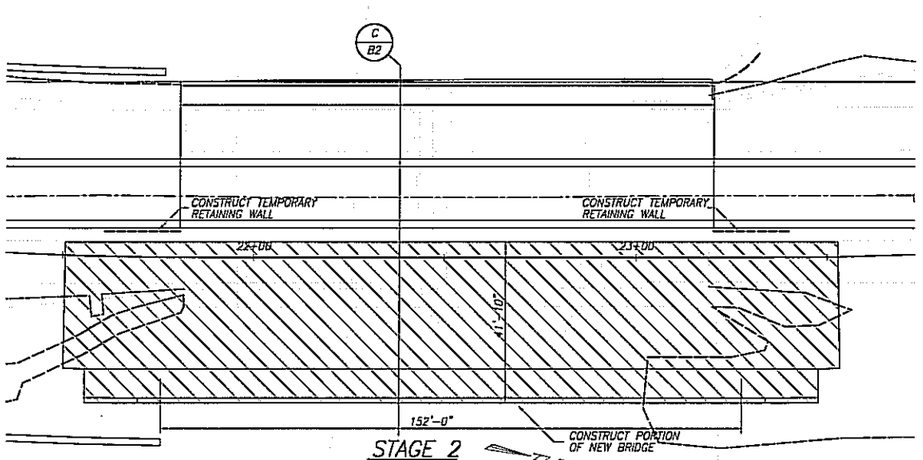

STAGE 2
1"=20'-0"

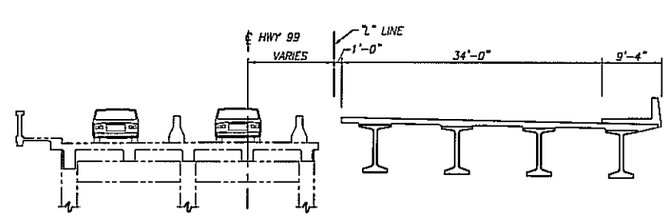

NOTE: MAINTAIN 2 LANES OF TRAFFIC ON EXIST'G BRIDGE

C / B2 SECTION
1"=10'-0"

50% SUBMITTAL

DESIGNED	GD, DS
DRAWN	JP, TR
CRP	341322
HOR.	AS NOTED
VERT.	AS NOTED
DATE	6/12/06
DWG.	B2
SHEET 33	OF

CALL 48 HOURS BEFORE YOU DIG 1-800-553-4344 "It's the Law" NORTHWEST UTILITIES NOTIFICATION CENTER

DOUGLAS J. SHUKTAKEN P.E. STATE OF WASHINGTON 20108 PROFESSIONAL ENGINEER
EXPIRES OCT. 22, 2006

ENGINEERING PROGRAM
DESIGN SECTION

KLINELINE BRIDGE
CONSTRUCTION STAGING PLAN NO. 1

proud past, promising future
CLARK COUNTY WASHINGTON

Plotted on Jun 13, 2006 - 9:41am, Modified 06-13-06
H:\Project-Files\2005\051198 - Kineline Bridge Replacement\AutoCAD FILES\ B2

FED AID # BRM-4253 (012)

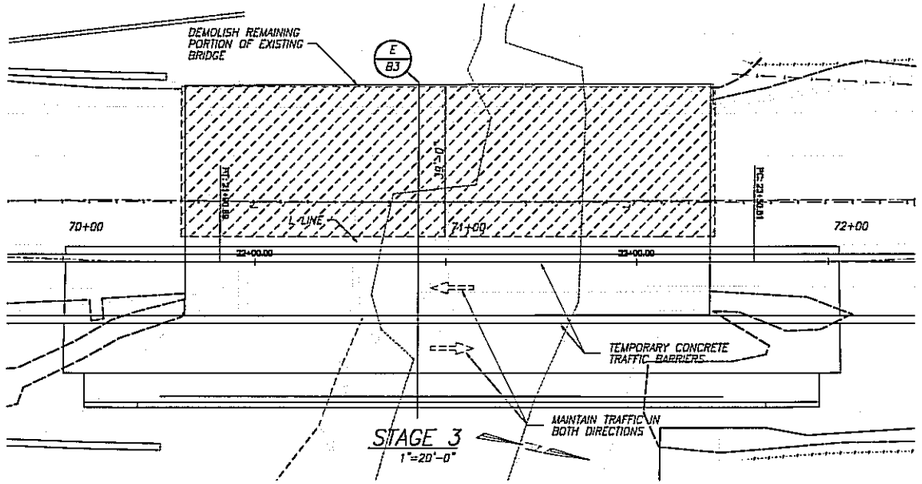

STAGE 3
1"=20'-0"

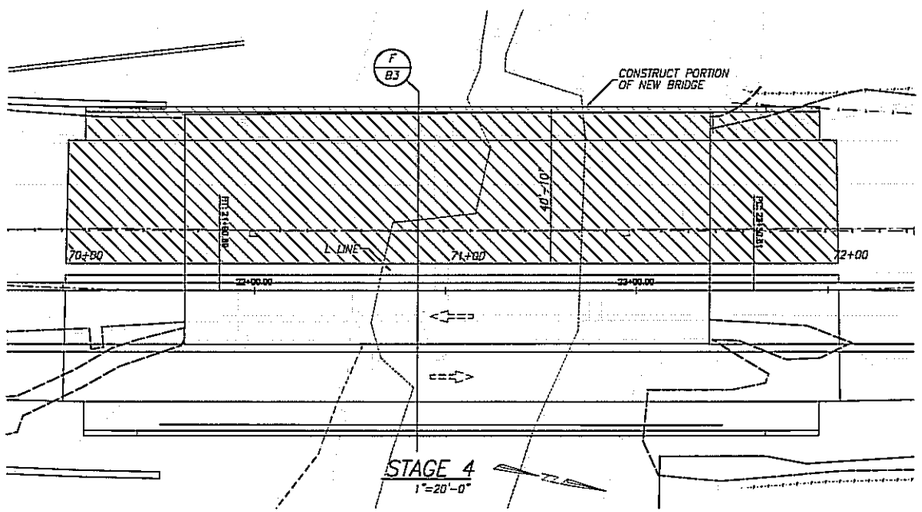

STAGE 4
1"=20'-0"

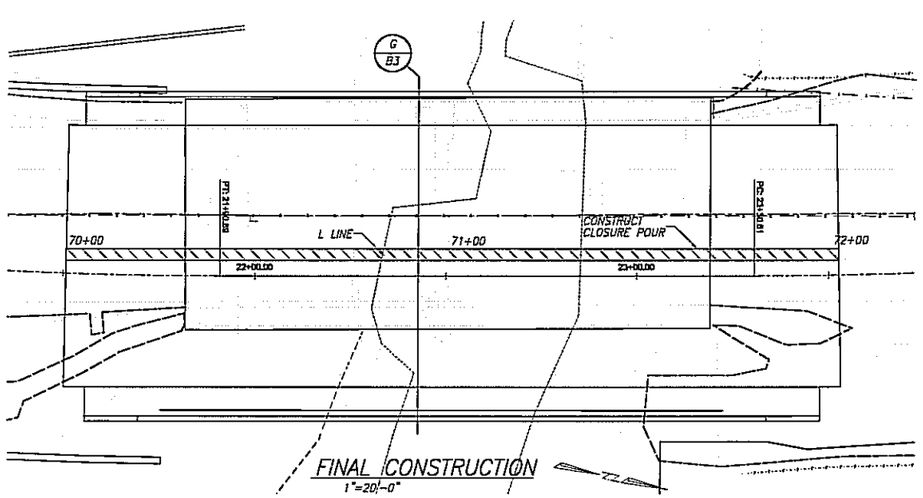

FINAL CONSTRUCTION
1"=20'-0"

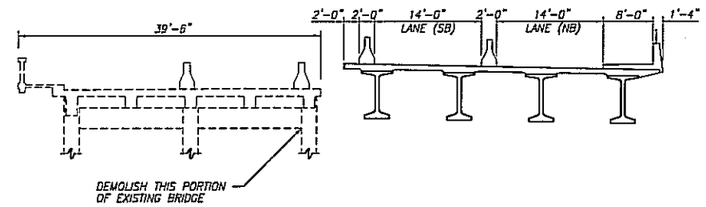

E/B3 SECTION
1"=10'-0"

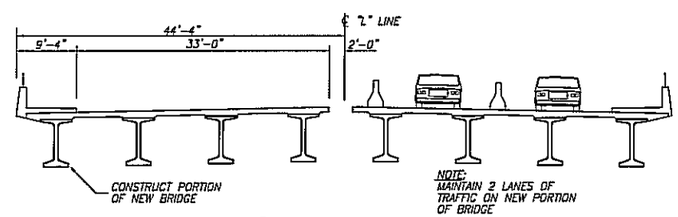

F/B3 SECTION
1"=10'-0"

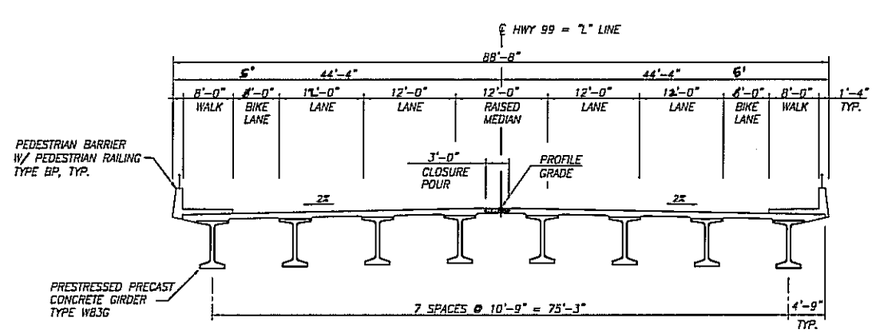

G/B3 TYPICAL SECTION
1"=10'-0"

50% SUBMITTAL

DESIGNED	GD, DS
DRAWN	JP, TR
CRP	341322
HOR.	AS NOTED
VERT.	AS NOTED
DATE	6/12/06
DWG:	B3
SHEET	#34 OF

CALL 48 HOURS BEFORE YOU DIG
1-800-553-4344
"It's the Law"
NORTHWEST UTILITIES NOTIFICATION CENTER

DOUGLAS L. SUDKAMP, P.E. STATE OF WASHINGTON 24136 REGISTERED PROFESSIONAL ENGINEER
EXPIRES OCT. 22, 2006

ENGINEERING PROGRAM
DESIGN SECTION

KLINELINE BRIDGE
CONSTRUCTION STAGING PLAN
2 OF 2

proud past, promising future
CLARK COUNTY
WASHINGTON

Plotted on Jun 13, 2006 - 9:36am, Modified 06-13-06
H:\Project-Files\2005\05198 - Klineline Bridge Replacement\AutoCAD FILES\ B3

FED AID # BRM-4253 (012)

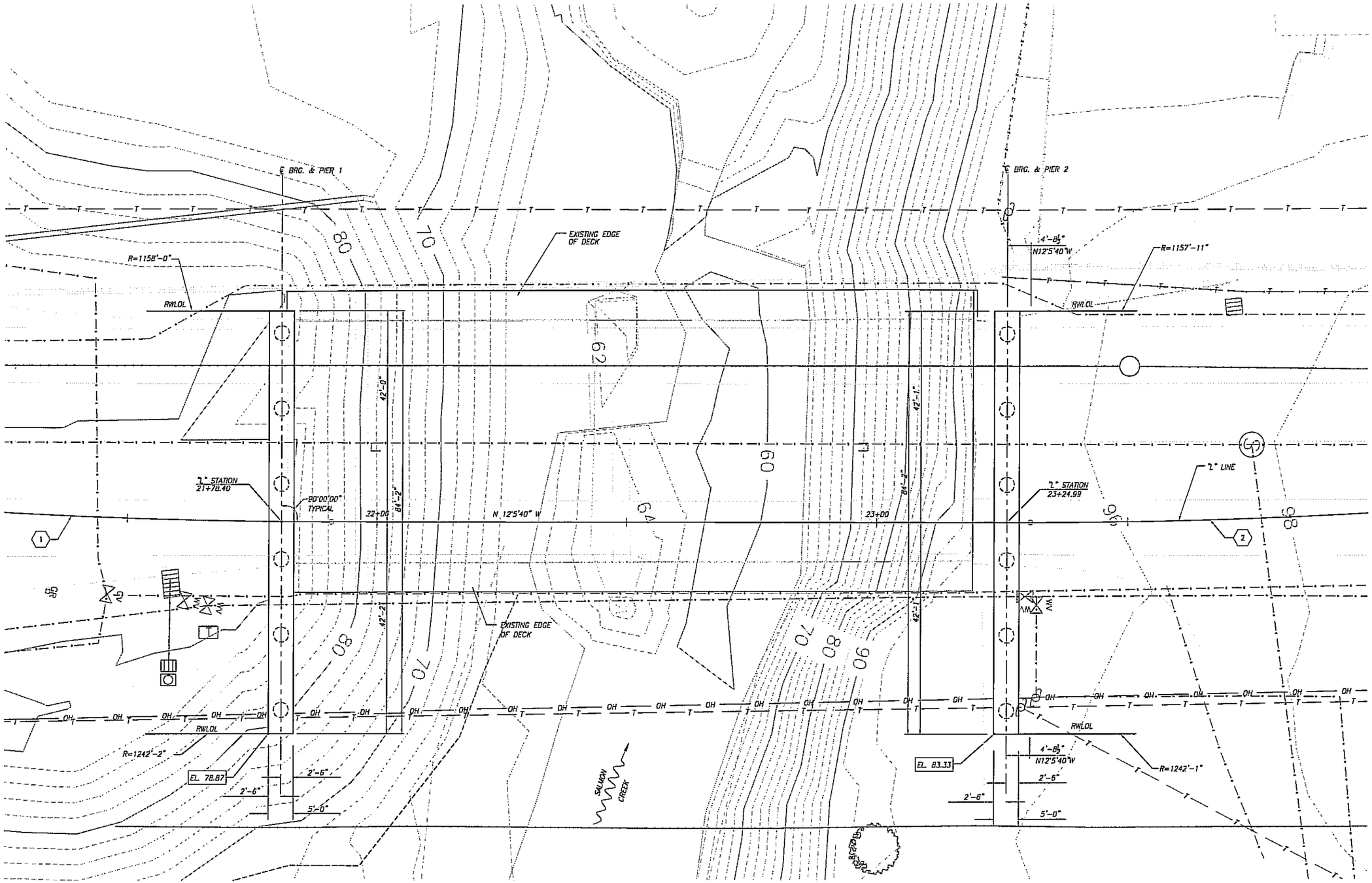

NOTES:
1. FOR CURVE DATA (1), (2) SEE "CURVE DATA" TABLE ON SHEET B1.
2. FOR UTILITY INFORMATION, SEE CIVIL PLANS.
3. ▭ DENOTES BOTTOM OF FOOTING ELEVATION.
4. ○ DENOTES CIDH PILE
5. SEE "LAYOUT PLAN" FOR LEGEND

FOUNDATION PLAN
1"=10'-0"

50% SUBMITTAL

DESIGNED	GD, DS
DRAWN	JP, TR
CRP	341322
HOR.	AS NOTED
VERT.	AS NOTED
DATE	6/12/06
DWG:	B4
SHEET 35	OF

CALL 48 HOURS BEFORE YOU DIG 1-800-553-4344 "It's the Law" NORTHWEST UTILITIES NOTIFICATION CENTER

DOUGLAS A. BARKHAUSEN P.E. STATE OF WASHINGTON REGISTERED PROFESSIONAL ENGINEER
EXPIRES OCT. 22, 2006

ENGINEERING PROGRAM
DESIGN SECTION

KLINELINE BRIDGE
FOUNDATION LAYOUT

proud past, promising future
CLARK COUNTY WASHINGTON

Plotted on Jun 13, 2006 - 9:12am, Modified 05-11-06
H:\Project-Files\2005\05198 - Kineline Bridge Replacement\AutoCAD FILES\ B4

FED AID # BRM-4253 (012)

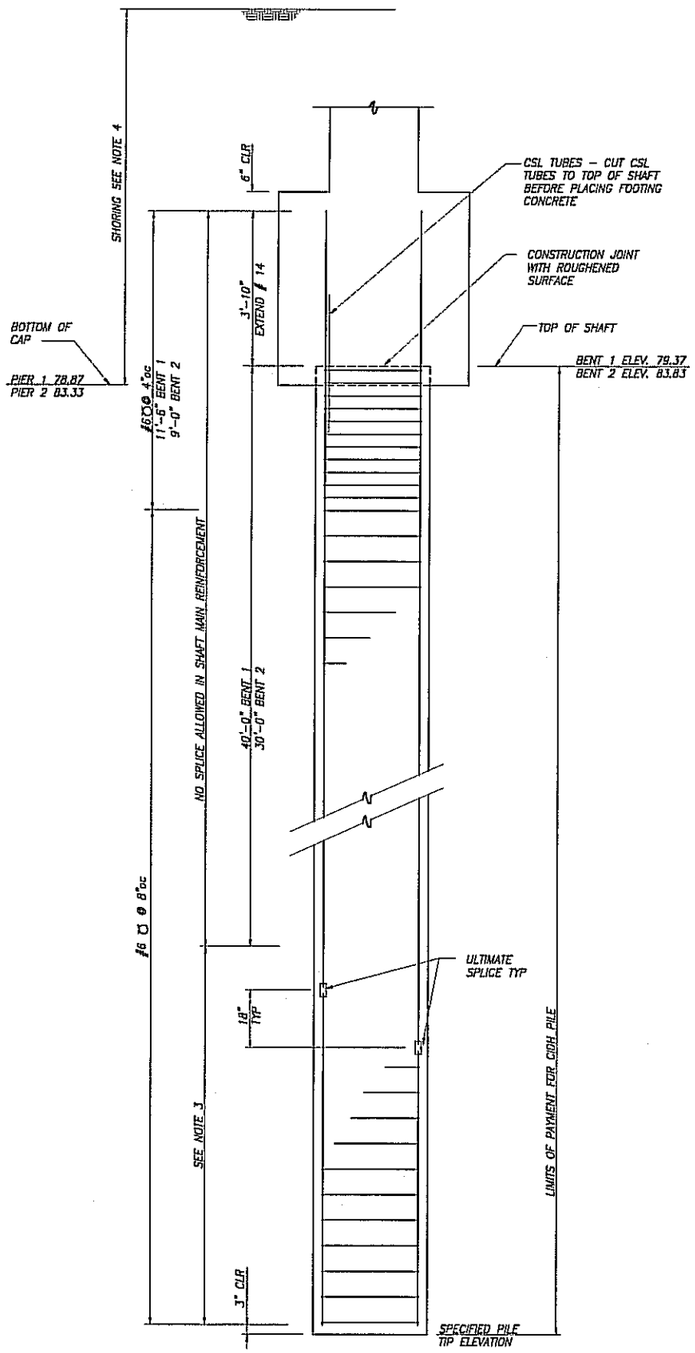

1/B5 ELEVATION
1/2"=1'-0"

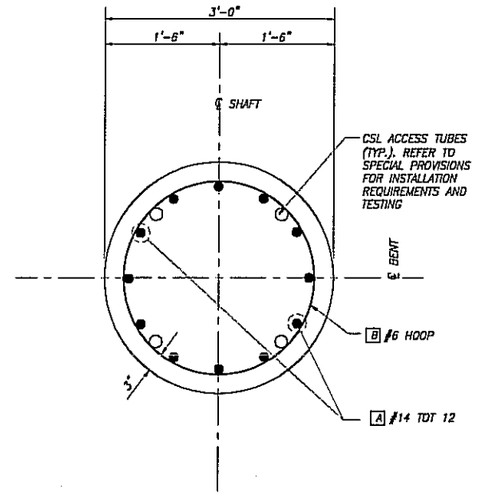

2/B5 PLAN SECTION
1"=1'-0"

NOTE:
1. FOR SHAFT DATA SEE "SHAFT CAPACITIES" TABLE THIS SHEET.
2. ALL HOOPS ARE "ULTIMATE" BUTT SPLICED CONTINUOUS.
3. ONLY STAGGERED "ULTIMATE" BUTT SPLICES ARE ALLOWED IN MAIN CIDH PILE REINFORCEMENT IN THIS ZONE
4. SHORING MAY BE DELETED PROVIDED THAT THE CONTRACTOR SHORES AND EXCAVATES FOR THE PIER CAP PRIOR TO THE SHAFT EXCAVATION.

NOMINAL SHAFT CAPACITIES

SERVICE – 1 LIMIT STATE		
PIER NO.	SKIN FRICTION CAPACITY	END BEARING CAPACITY
1	XXX	XXX
2	XXX	XXX
STRENGTH LIMIT STATE		
PIER NO.	SKIN FRICTION CAPACITY	END BEARING CAPACITY
1	XXX	XXX
2	XXX	XXX
EXTREME EVENT –1 LIMIT STATE		
PIER NO.	SKIN FRICTION CAPACITY	END BEARING CAPACITY
1	XXX	XXX
2	XXX	XXX

SHAFT BAR LIST

ALL REINFORCING SHALL BE AASHTO M31, GR. 60

MARK	SIZE	NO.	MARK		
A	14	144			
B	6				
				TOTAL	

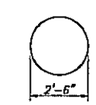

WEIGHT INCLUDES SPLICES

HOOP

50% SUBMITTAL

DESIGNED	GD, DS
DRAWN	JP, TR
CRP	341322
HOR.	AS NOTED
VERT.	AS NOTED
DATE	6/12/06
DWG:	B5
SHEET 36	OF

CALL 48 HOURS BEFORE YOU DIG 1-800-553-4344 "It's the Law" NORTHWEST UTILITIES NOTIFICATION CENTER

STEVEN L. SABRANSKI P.E. STATE OF WASHINGTON 34136 REGISTERED PROFESSIONAL ENGINEER EXPIRES OCT. 02, 2006

ENGINEERING PROGRAM
DESIGN SECTION

KLINELINE BRIDGE
SHAFT DETAILS

proud past, promising future
CLARK COUNTY WASHINGTON

Plotted on Jun 12, 2006 – 10:28am, Modified 06-11-06
H:\Project-Files\2005\05198 – Kline Bridge Replacement\AutoCAD FILES\ B5

FED AID # BRM-4253 (012)

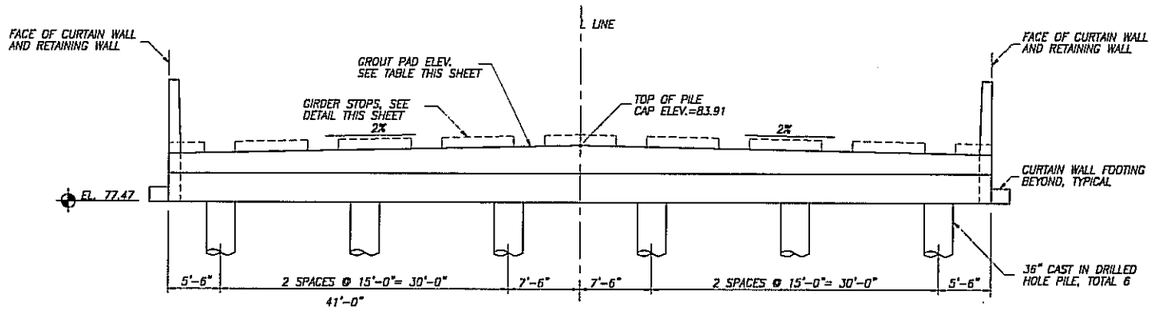

ABUTMENT 1 ELEVATION
1/8"=1'-0"

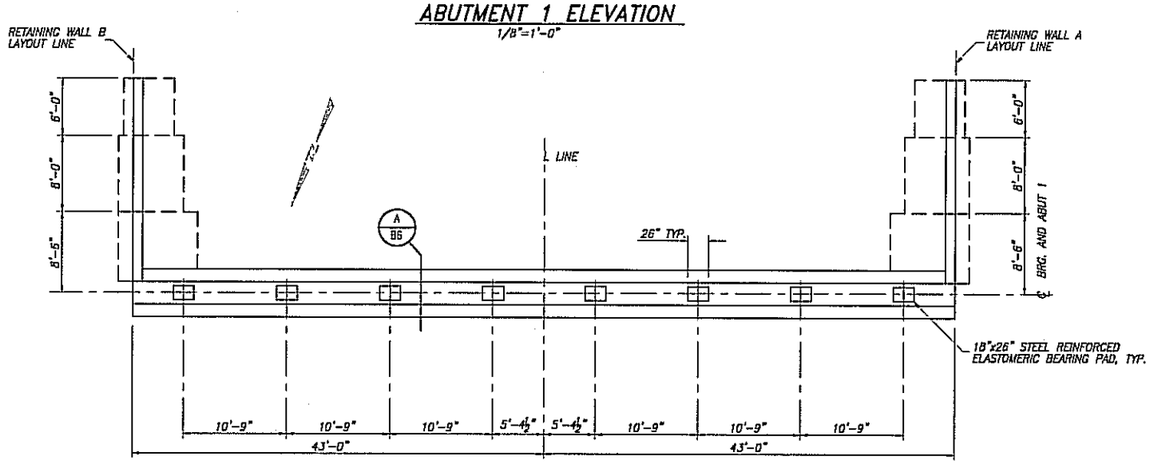

ABUTMENT 1 PLAN
1/8"=1'-0"

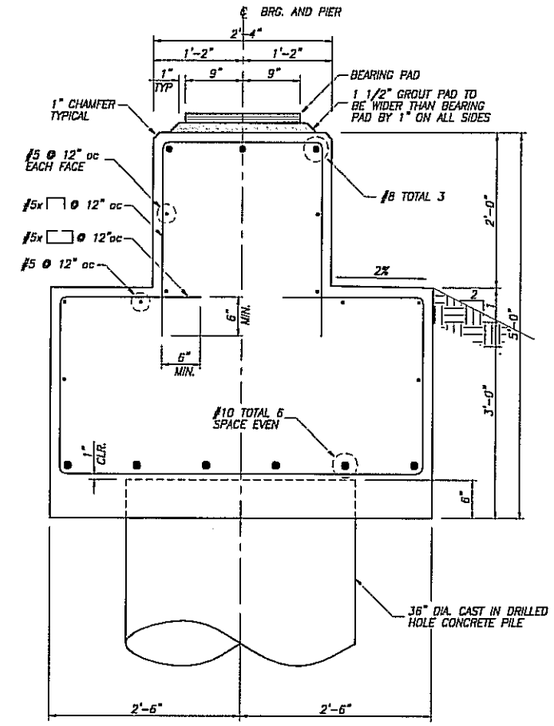

A/B4 SECTION
1"=1'-0"

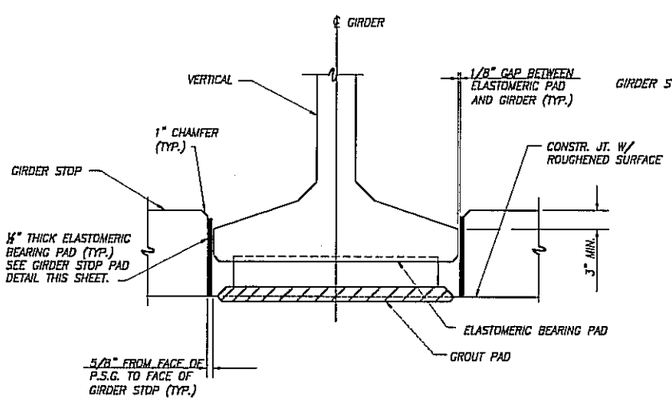

NOTE:

1. GIRDER STOPS SHALL BE CONSTRUCTED AFTER PLACEMENT OF PRESTRESSED GIRDERS.
2. ELASTOMERIC PADS BETWEEN GIRDER AND GIRDER STOPS SHALL BE PLACED AFTER CONSTRUCTING THE GIRDER STOPS. THE PADS SHALL BE CEMENTED TO GIRDER STOPS WITH APPROVED RUBBER CEMENT.

B/B4 GIRDER STOP DETAIL
1"=1'-0"

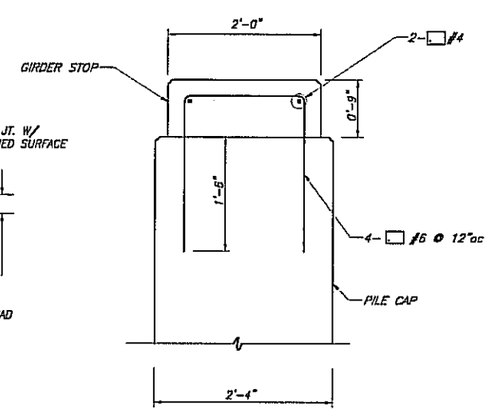

C/B4 GIRDER STOP SECTION
1"=1'-0"

TOP OF GROUT PAD ELEVATIONS

GIRDER	ABUT 1 ELEVATION
A	82.78
B	83.00
C	83.21
D	83.43
E	83.43
F	83.21
G	83.00
H	82.78

50% SUBMITTAL

DESIGNED	GD, DS
DRAWN	JP, TR
CRP	341322
HOR.	AS NOTED
VERT.	AS NOTED
DATE	6/12/06
DWG:	B6
SHEET 37	OF

CALL 48 HOURS BEFORE YOU DIG 1-800-553-4344 "It's the Law" NORTHWEST UTILITIES NOTIFICATION CENTER

STATE OF WASHINGTON DOUGLAS A. BARKLEY P.E. 24136 PROFESSIONAL ENGINEER EXPIRES OCT. 20, 2006

ENGINEERING PROGRAM
DESIGN SECTION

KLINELINE BRIDGE
ABUTMENT 2 LAYOUT

proud past, promising future

CLARK COUNTY WASHINGTON

Plotted on Jun 12, 2006 – 10:28am, Modified 06-11-06
H:\Project-Files\2005\05198 – Kineline Bridge Replacement\AutoCAD FILES\ B6

FED AID # BRM-4253 (012)

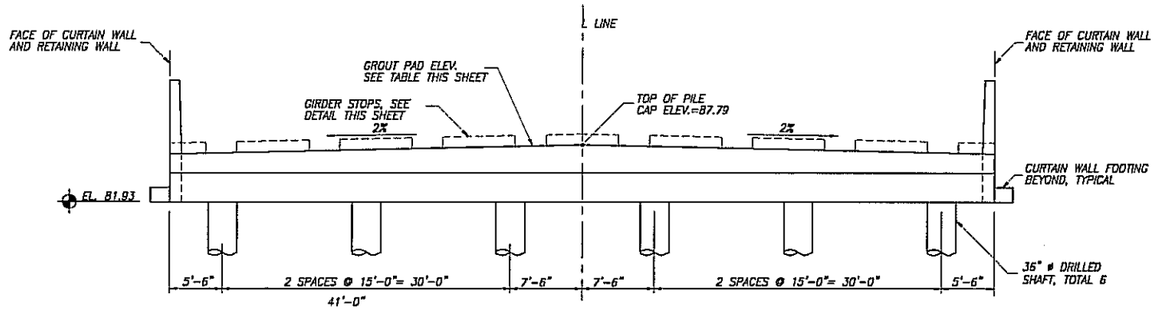

ABUTMENT 2 ELEVATION
1/8"=1'-0"

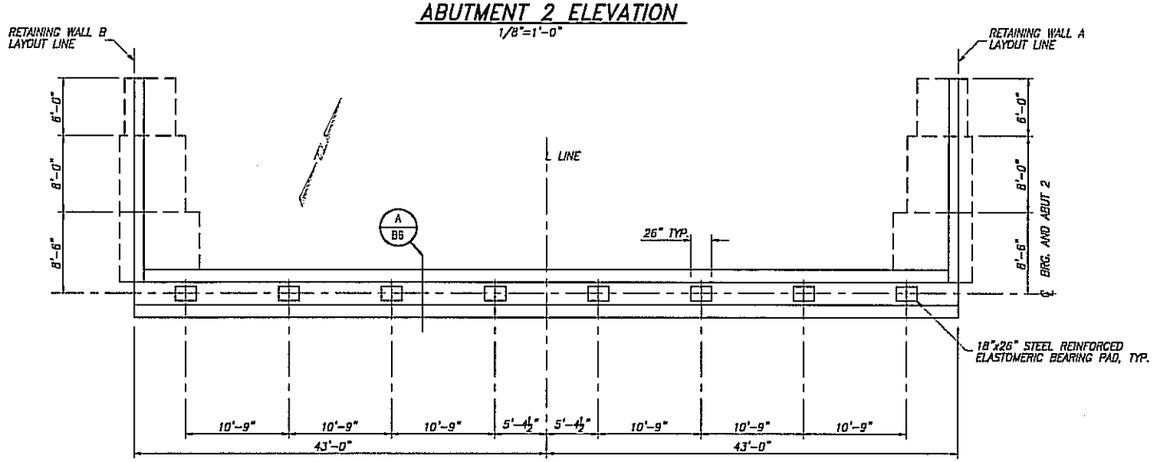

ABUTMENT 2 PLAN
1/8"=1'-0"

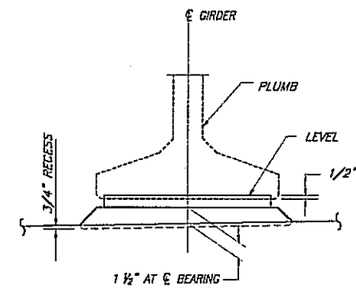

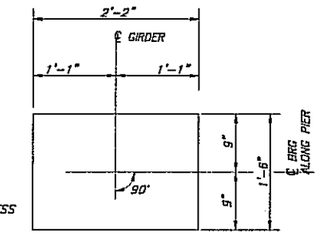

LAMINATED ELASTOMERIC BRIDGE PAD 0'-4" THICK (8 SHIMS) DUROMETER HARDNESS = 60

A / B7 GROUT PAD GEOMETRY
1"=1'-0"

B / B7 BEARING PAD
1"=1'-0"

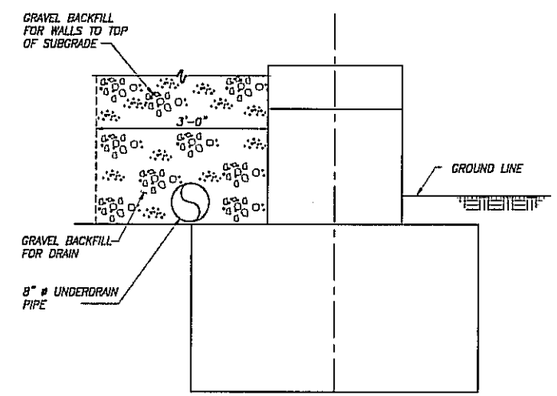

F / B7 DRAINAGE DETAIL
3/4"=1'-0"

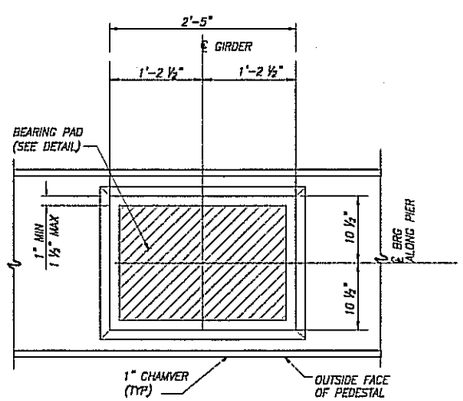

C / B7 GROUT PAD DETAIL
1"=1'-0"

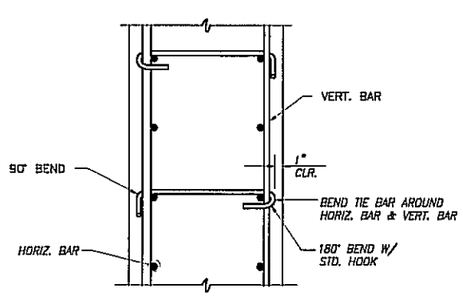

D / B7 TIE BAR DETAIL
1"=1'-0"

ALTERNATE 180° HOOK EVERY OTHER TIE BAR.

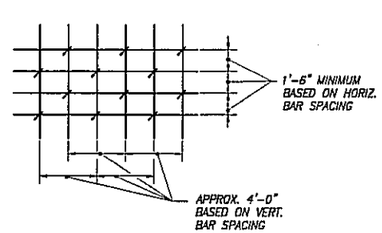

E / B7 TIE SPACING DETAIL
1"=1'-0"

TOP OF GROUT PAD ELEVATIONS

GIRDER	ABUT 2 ELEVATION
A	87.25
B	87.46
C	87.68
D	87.89
E	87.89
F	87.68
G	87.46
H	87.25

50% SUBMITTAL

DESIGNED	GD, DS
DRAWN	JP, TR
CRP	341322
HOR.	AS NOTED
VERT.	AS NOTED
DATE	6/12/06
DWG:	B7
SHEET 38	OF

CALL 48 HOURS BEFORE YOU DIG 1-800-553-4344 "It's the Law" NORTHWEST UTILITIES NOTIFICATION CENTER

STATE OF WASHINGTON DOUGLAS A. SARKKINEN P.E. 34156 REGISTERED PROFESSIONAL ENGINEER EXPIRES OCT. 22, 2006

ENGINEERING PROGRAM
DESIGN SECTION

KLINELINE BRIDGE
ABUTMENT 2 LAYOUT

proud past, promising future
CLARK COUNTY WASHINGTON

Plotted on Jun 12, 2006 - 10:23am, Modified 06-11-06
H:\Project-Files\2005\03198 - Kineline Bridge Replacement\AutoCAD FILES\ B7

FED AID # BRM-4253 (012)

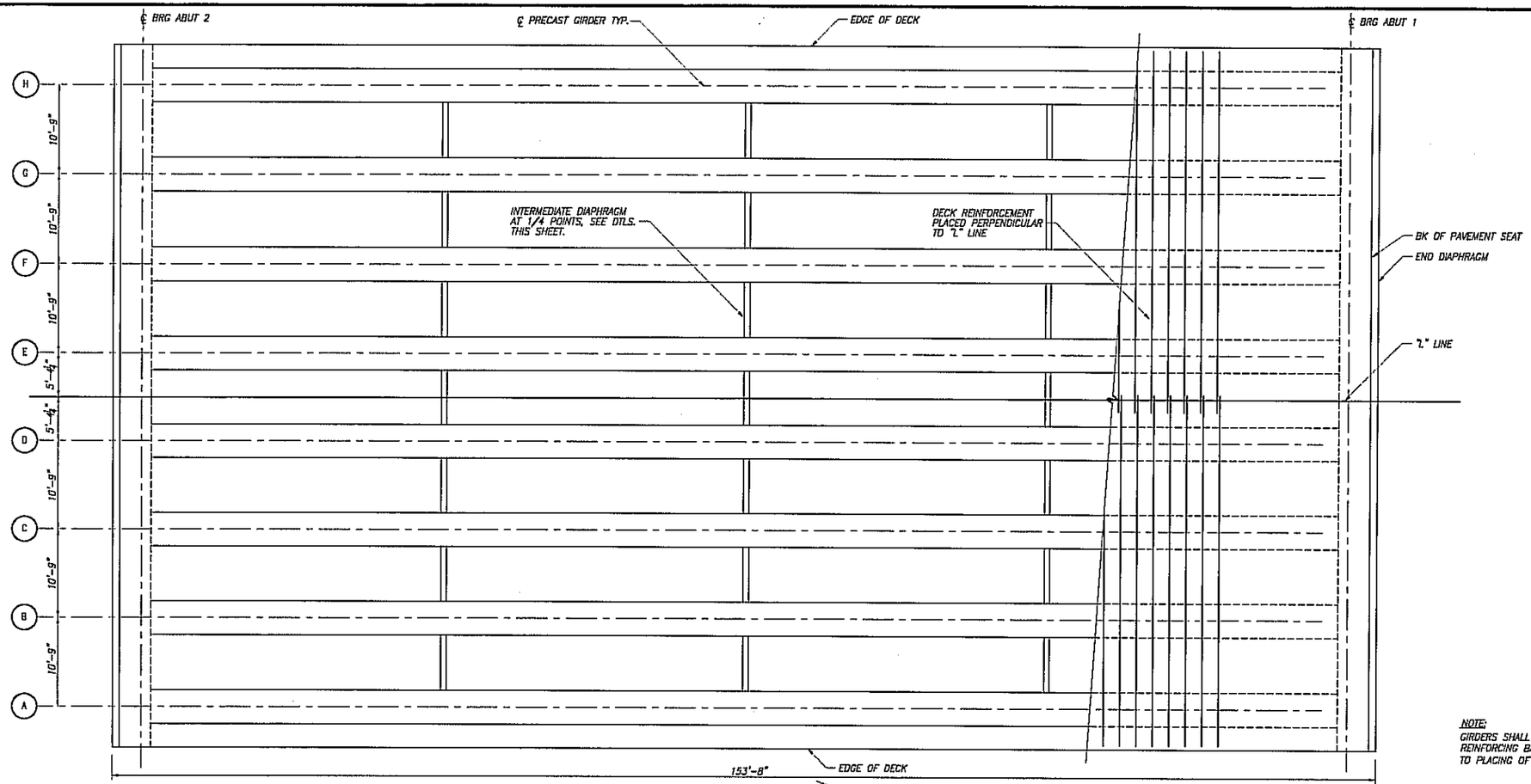

FRAMING PLAN
1/8"=1'-0"

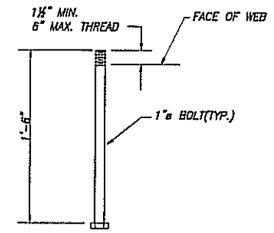

ANCHOR DETAIL A.S.T.M. A-307
1 1/2"=1'-0"

NOTE:
GIRDERS SHALL BE HELD RIGIDLY IN PLACE WHEN DIAPHRAGMS ARE PLACED. REINFORCING BAR SHALL BE THREADED THROUGH HOLES IN GIRDERS PRIOR TO PLACING OF EXTERIOR GIRDERS. SEE "GIRDER DETAILS" SHEET FOR DIMENSION "A".

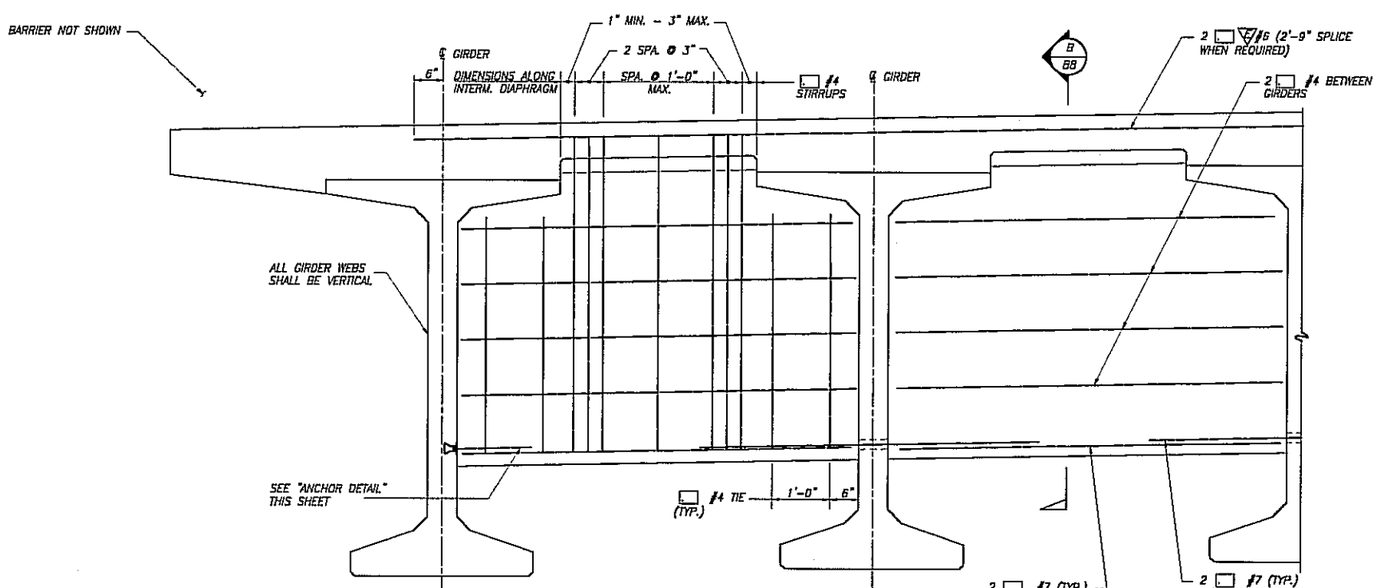

TYPICAL INTERMEDIATE DIAPHRAGM
3/4"=1'-0"

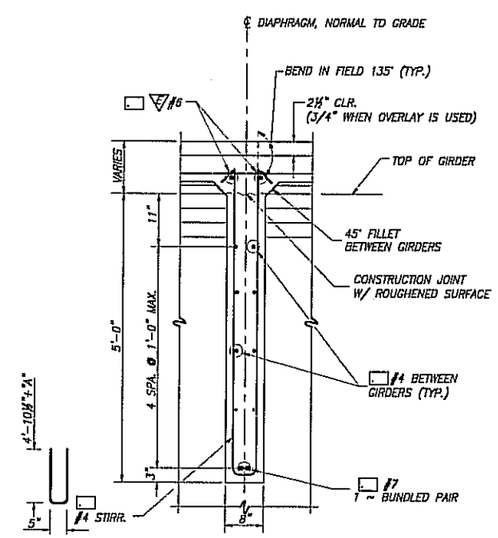

SECTION
3/4"=1'-0"

50% SUBMITTAL

DESIGNED	GD, DS
DRAWN	JP, TR
CRP	341322
HOR.	AS NOTED
VERT.	AS NOTED
DATE	5/12/06
DWG:	B8
SHEET 39	OF

CALL 48 HOURS BEFORE YOU DIG 1-800-553-4344 "It's the Law" NORTHWEST UTILITIES NOTIFICATION CENTER

DOUGLAS S. SARKAINEN P.E. STATE OF WASHINGTON 19411 PROFESSIONAL ENGINEER
EXPIRES OCT. 20, 2006

ENGINEERING PROGRAM
DESIGN SECTION

KLINELINE BRIDGE
FRAMING PLAN

proud past, promising future
CLARK COUNTY WASHINGTON

Plotted on Jun 12, 2006 - 10:28am, Modified 06-11-06
H:\Project-Files\2003\05198 - Kineline Bridge Replacement\AutoCAD FILES\ B8

FED AID # BRM-4253 (012)

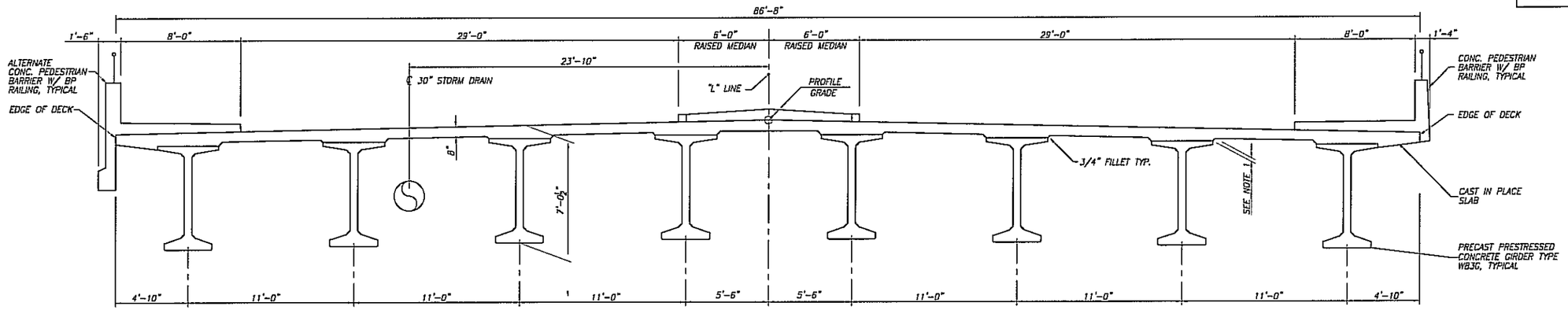

TYPICAL SECTION
1/4"=1'-0"

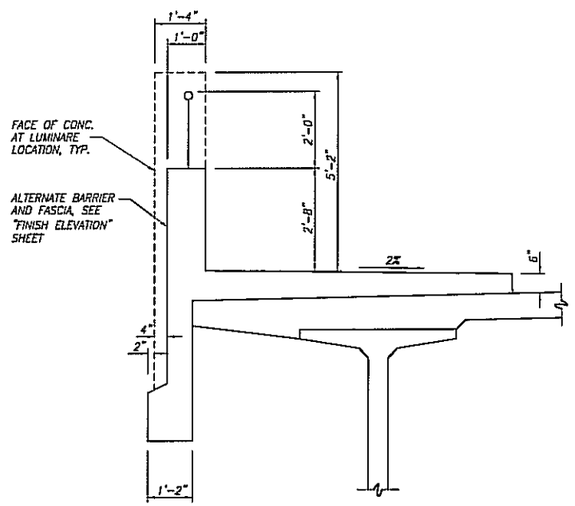

ALTERNATE BARRIER SECTION
1/2"= 1'-0"

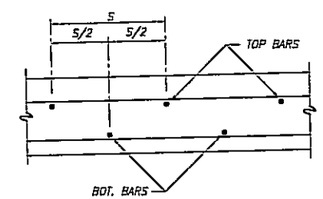

TRANSVERSE DECK REINFORCEMENT SPACING DIAGRAM
NO SCALE

NOTES:

1. PROVIDE 2" MAXIMUM FILLER BETWEEN TOP OF PRECAST GIRDER AND LOWER SURFACE OF DECK AT ABUTMENTS. DEPTH OF FILLER VARIES ALONG THE LENGTH OF PRECAST GIRDER DUE TO THE GIRDER CAMBER.
2. TOP AND BOTTOM REINFORCEMENT IN BOTH LONGITUDINAL AND TRANSVERSE DIRECTION OF THE DECK SLAB SHALL BE STAGGERED.
3. THE INTERMEDIATE AND END DIAPHRAGMS SHALL BE PLACED AT LEAST 5 DAYS BEFORE THE DECK.

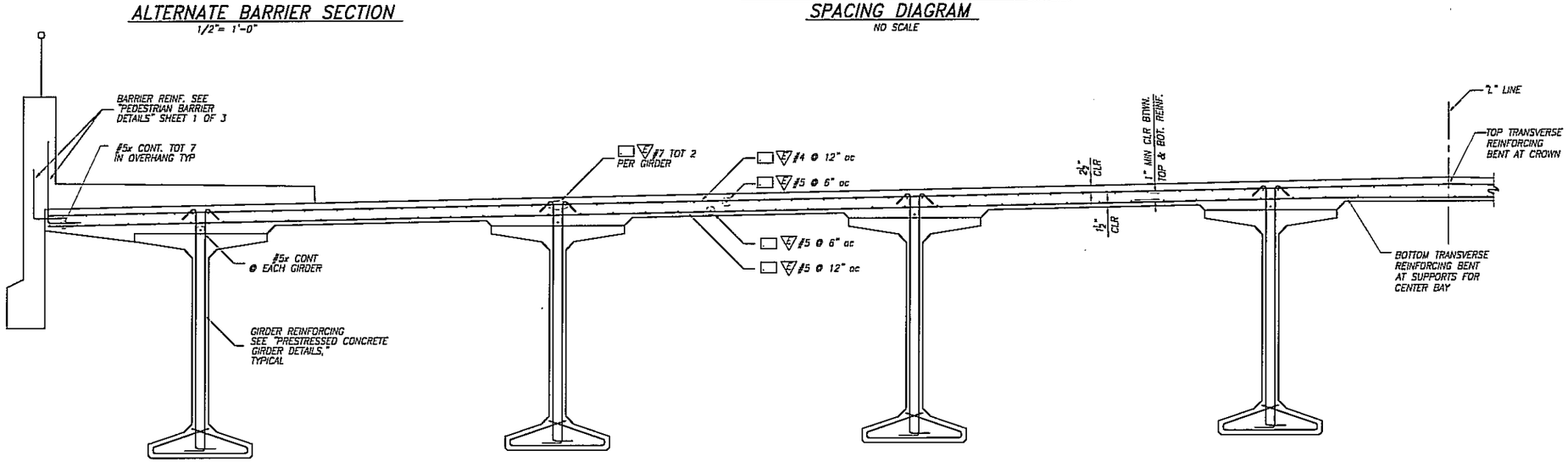

PARTIAL TYPICAL SECTION
1/2"=1'-0"

50% SUBMITTAL

DESIGNED	GD, DS
DRAWN	JP, TR
CRP	341.322
HOR.	AS NOTED
VERT.	AS NOTED
DATE	6/12/06
DWG:	B9
SHEET 40	OF

CALL 48 HOURS BEFORE YOU DIG 1-800-553-4344 "It's the Law" NORTHWEST UTILITIES NOTIFICATION CENTER

DOUGLAS W. SARGENTSON P.E. STATE OF WASHINGTON 21202 REGISTERED PROFESSIONAL ENGINEER
EXPIRES OCT. 22, 2006

ENGINEERING PROGRAM
DESIGN SECTION

KLINELINE BRIDGE
TYPICAL SECTION

proud past, promising future
CLARK COUNTY WASHINGTON

Plotted on Jun 13, 2006 - 9:44am, Modified 06-13-06
H:\Project-Files\2005\05198 - Kineline Bridge Replacement\AutoCAD FILES\ B9

FED AID # BRM-4253 (012)

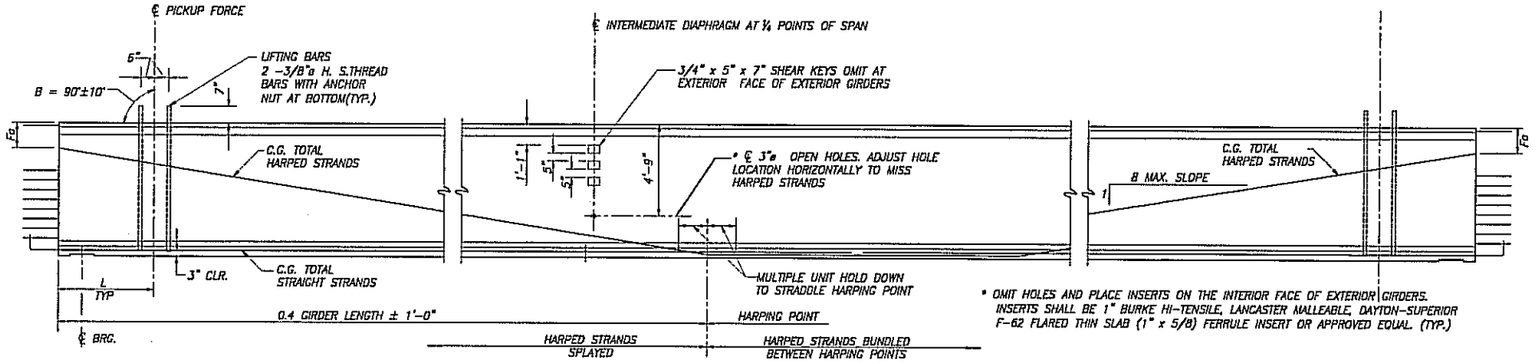

• OMIT HOLES AND PLACE INSERTS ON THE INTERIOR FACE OF EXTERIOR GIRDERS. INSERTS SHALL BE 1" BURKE HI-TENSILE, LANCASTER MALLEABLE, DAYTON-SUPERIOR F-62 FLARED THIN SLAB (1" x 5/8) FERRULE INSERT OR APPROVED EQUAL. (TYP.)

GIRDER ELEVATION
1/4"= 1'-0"

NOTES:

1. ALL DETAILS ON THIS SHEET ARE FOR PRETENSIONED DESIGN ONLY.
2. PLAN LENGTH SHALL BE INCREASED AS NECESSARY TO COMPENSATE FOR SHORTENING DUE TO PRESTRESS AND SHRINKAGE.
3. ALL STRANDS SHALL BE 0.6"ø LOW RELAXATION STRANDS (AASHTO M203 GRADE 270.)
4. FOR END TYPES A, C AND D, CUT ALL STRANDS FLUSH WITH THE GIRDER ENDS AND PAINT WITH AN APPROVED EPOXY RESIN, EXCEPT FOR EXTENDED STRANDS AS SHOWN. FOR END TYPES B AND E CUT ALL STRANDS 1" BELOW CONCRETE SURFACE AND GROUT WITH AN APPROVED EPOXY GROUT.
5. THE TOP SURFACE OF THE GIRDER FLANGE SHAL BE ROUGHENED IN ACCORDANCE WITH SECTION 6-023(25)H OF THE STANDARD SPECIFICATIONS.
6. LIFTING BARS SHALL BE 3/8 INCH DIAMETER HIGH STRENGTH THREADED BARS (AASHTO M275 GRADE 150 MINIMUM.) LIFTING HARDWARE THAT CONNECTS TO THE THREADED BARS SHALL BE DESIGNED, DETAILED AND FURNISHED BY THE CONTRACTOR. LIFTING FORCES ON THREADED BARS SHALL BE WITHIN 10 DEGRESS OF PERPENDICULAR TO THE TOP OF THE GIRDER. ALTERNATE LIFTING CONFIGURATIONS MAY BE SUBMITTED BY THE CONTRACTOR IN ACCORDANCE WITH SECTION 6-02.3(25)L OF THE STANDARD SPECIFICATIONS.
7. EXTRA CAUTION MUST BE EXERCISED IN HANDLING AND PLACING GIRDERS. ALL GIRDERS SHALL BE CHECKED BY THE CONTRACTOR TO ENSURE THAT THEY ARE BRACED ADEQUATELY TO PREVENT TIPPING AND TO CONTROL LATERAL BENDING DURING SHIPPING. ONCE ERECTED, ALL GIRDERS SHALL BE BRACED TO PREVENT TIPPING UNTIL THE INTERMEDIATE DIAPHRAGMS ARE CAST AND CURED.
8. THE TOP SURFACE OF THE GIRDER FLANGE SHALL BE ROUGHENED IN ACCORDANCE WITH SECTION 6-02.3(25)H OF THE STANDARD SPECIFICATIONS.
9. FORMS FOR BEARING PAD RECESSES SHALL BE CONSTRUCTED AND FASTENED IN SUCH A MANNER AS TO NOT CAUSE DAMAGE TO THE GIRDER DURING THE STRAND RELEASE OPERATION.
10. FOR SAWTOOTH DETAILS SEE PRESTRESSED GIRDER DETAILS SHEET 2 OF 2.
11. TEMPORARY STRANDS ARE PRETENSIONED OR POST-TENSIONED. IF PRETENSIONED, THESE TEMPORARY STRANDS SHALL BE UNBONDED OVER ALL BUT THE END 10'-0" OF THE GIRDER LENGTH. AS AN ALTERNATE, TEMPORARY STRANDS MAY BE POST TENSIONED BEFORE THE GIRDER IS LIFTED FROM THE FORM. TEMPORARY STRANDS SHALL BE CUT AFTER ALL GIRDERS ARE ERECTED, BUT BEFORE INTERMEDIATE DIAPHRAGMS ARE CAST.

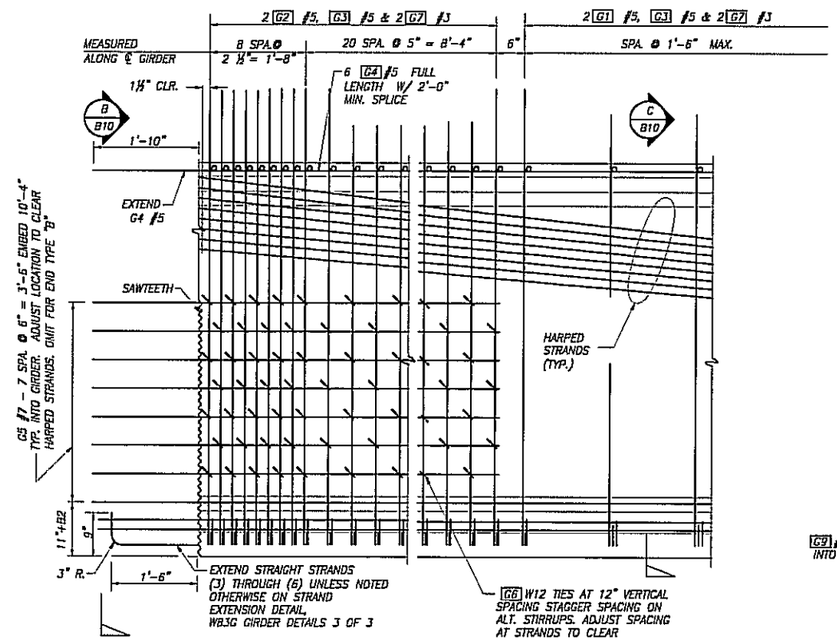

TYPICAL END ELEVATION
3/4"=1'-0"

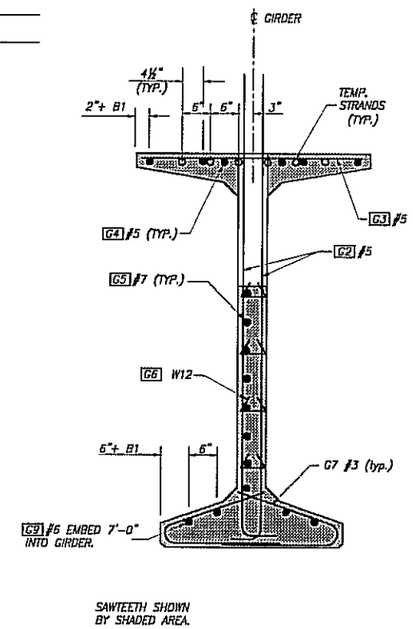

B / B10 VIEW
3/4"=1'-0"

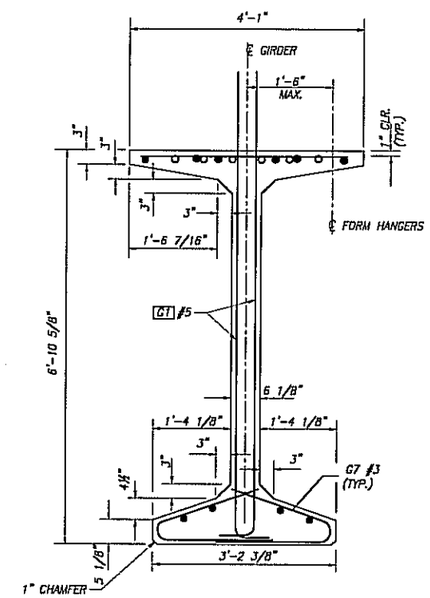

C / B10 SECTION
3/4"=1'-0"

BENDING DIAGRAM (ALL DIMENSIONS ARE OUT TO OUT)

MARK	LOCATION	SIZE	
G1	GIRDER STIRRUPS	5	
G2	GIRDER END STIRRUPS	5	
G3	GIRDER TOP FLANGE	5	STR.
G4	GIRDER LONGIT. FULL LENGTH	5	STR.
G5	GIRDER END LONGIT.	7	STR.
G6	GIRDER END TIES	W12	±
G7	GIRDER BOT. FLANGE TIES	3	
G9	GIRDER END LONGIT.	6	STR.

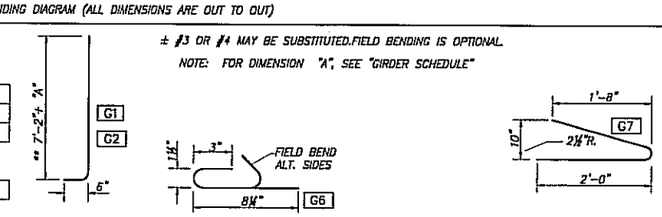

± #3 OR #4 MAY BE SUBSTITUTED.FIELD BENDING IS OPTIONAL.

NOTE: FOR DIMENSION "A", SEE "GIRDER SCHEDULE"

** SHALL BE CHECKED FOR EFFECT OF ROWY VERTICAL CURVE

50% SUBMITTAL

DESIGNED	GD, DS
DRAWN	JP, TR
CRP	341322
HOR.	AS NOTED
VERT.	AS NOTED
DATE	6/12/06
DWG:	B10
SHEET 41	OF

CALL 48 HOURS BEFORE YOU DIG 1-800-553-4344 "It's the Law" NORTHWEST UTILITIES NOTIFICATION CENTER

BARKHAND, P.E. DOUGLAS W. STATE OF WASHINGTON 24106 PROFESSIONAL ENGINEER EXPIRES OCT. 22, 2006

ENGINEERING PROGRAM
DESIGN SECTION

KLINELINE BRIDGE
PRESTRESSED CONCRETE GIRDER DETAILS
1 OF 2

proud past, promising future

CLARK COUNTY
WASHINGTON

Plotted on Jun 12, 2006 - 10:26am, Modified 06-11-06
H:\Project-Files\2005\05198 - Kineline Bridge Replacement\AutoCAD FILES\ B10

FED AID # BRM-4253 (012)

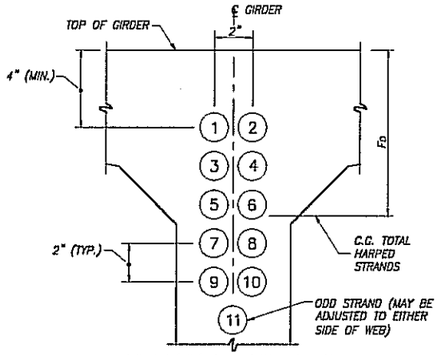

STRAND PATTERN AT GIRDER END

3"=1'-0"

HARPED STRAND LOCATION SEQUENCE SHALL BE AS SHOWN (1), (2) ETC.

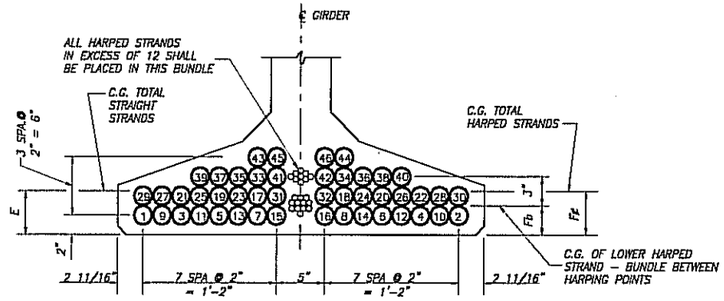

STRAIGHT STRAND LOCATION SEQUENCE SHALL BE AS SHOWN (1), (2) ETC.

STRAND PATTERN AT ℄ SPAN

1 1/2"=1'-0"

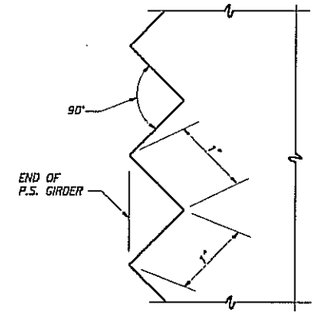

SAWTEETH ARE FULL WIDTH – USE SAWTOOTH KEYS FROM BOTTOM OF BOTTOM FLANGE TO BOTTOM OF LOWEST HARPED STRAND AS WELL AS TOP FLANGE ADJACENT TO HARPED STRANDS AS SHOWN IN VIEW B – WB3G GIRDER DETAILS 1 OF 3

SAWTOOTH DETAILS

1:1

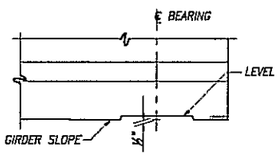

ELEVATION

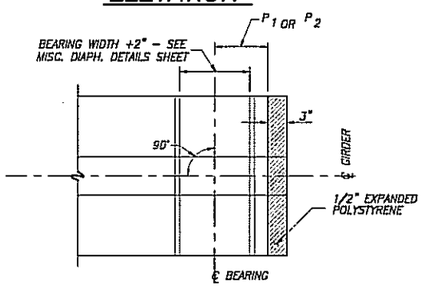

PLAN–BEARING RECESS AND BOTTOM FLANGE SPALL PROTECTION DETAIL

1"=1'-0"

GIRDER SCHEDULE

DIMENSION "A" AT ℄ BEARINGS =10 1/8"

BASED ON GIRDER DEFLECTION = "D" AT TIME OF SLAB PLACEMENT (120 DAYS)

SPAN	GIRDER	END 1 TYPE	END 2 TYPE	L	P_1	P_2	PLAN LENGTH (ALONG GIRDER GRADE)	MIN. CONC. COMPR. STRENGTH @ FINAL F'c (KSI)	MIN. CONC. COMPR. STRENGTH @ RELEASE F'ci (KSI)	HARPED NO. OF STRANDS	HARPED JACKING FORCE (KIPS)	STRAIGHT NO. OF STRANDS	STRAIGHT JACKING FORCE (KIPS)	TEMPORARY NO. OF STRANDS	TEMPORARY JACKING FORCE (KIPS)	LOCATION OF C.G. STRANDS (IN.) E	LOCATION OF C.G. STRANDS (IN.) FcE	LOCATION OF C.G. STRANDS (IN.) Fb	LOCATION OF C.G. STRANDS (IN.) Fo	C (IN.)	D @ 40 DAYS (IN.)	D @ 120 DAYS (IN.)	Ld (IN.)
1	ALL	A	A	–	–	–	–	–	–	–	–	–	–	–	–	–	–	–	–	–	–	–	–

TEMPORARY STRAND CUTTING SEQUENCE

1. ERECT AND BRACE GIRDERS.
2. REMOVE EXPANDED POLYSTYRENE IN 2" X 2" RECESSES IN TOP FLANGE OF GIRDERS.
3. CUT STRAND AND PLASTIC SLEEVE IN 2" X 2" RECESS.
4. REMOVE ALL MOISTURE IN RECESS PRIOR TO FILLING RECESS WITH GROUT.
5. CAST INTERMEDIATE & END DIAPHRAGMS.
6. PLACE DECK CONCRETE.
7. SEE DETAILS THIS SHEET FOR 2" RECESS BLOCKOUT DETAILS.

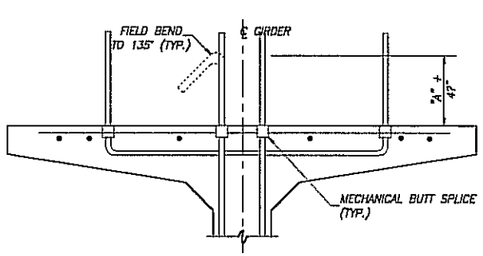

ALTERNATE STIRRUP DETAIL

1 1/2"=1'-0"

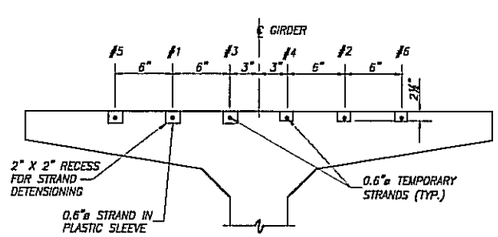

TEMPORARY STRAND BLOCKOUT DETAIL

1 1/2"=1'-0"

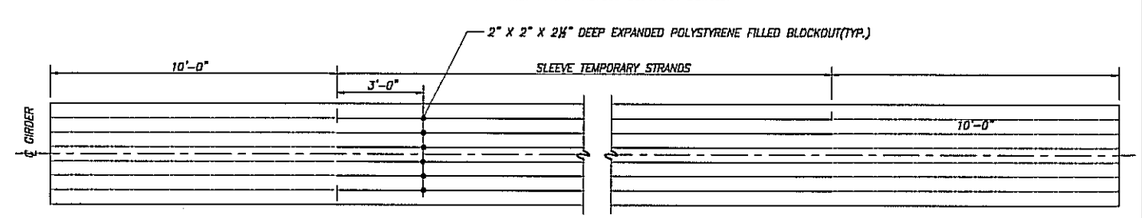

PLAN VIEW OF TEMPORARY STRANDS

3/8"=1'-0"

50% SUBMITTAL

DESIGNED	GD, DS
DRAWN	JP, TR
CRP	341322
HOR.	AS NOTED
VERT.	AS NOTED
DATE	6/12/06
DWG.	B11
SHEET	42 OF

CALL 48 HOURS BEFORE YOU DIG 1-800-553-4344 "It's the Law" NORTHWEST UTILITIES NOTIFICATION CENTER

DONALD R. BARKALOW P.E. STATE OF WASHINGTON 14386 REGISTERED PROFESSIONAL ENGINEER

D3K53 OCT. 12, 2006

ENGINEERING PROGRAM
DESIGN SECTION

KLINELINE BRIDGE
PRESTRESSED CONCRETE GIRDER DETAILS
2 OF 2

proud past, promising future

CLARK COUNTY WASHINGTON

Plotted on Jun 12, 2006 – 10:26am, Modified 06-11-06
H:\Project-Files\2005\05198 – Kineline Bridge Replacement\AutoCAD FILES\ B11

FED AID # BRM-4253 (012)

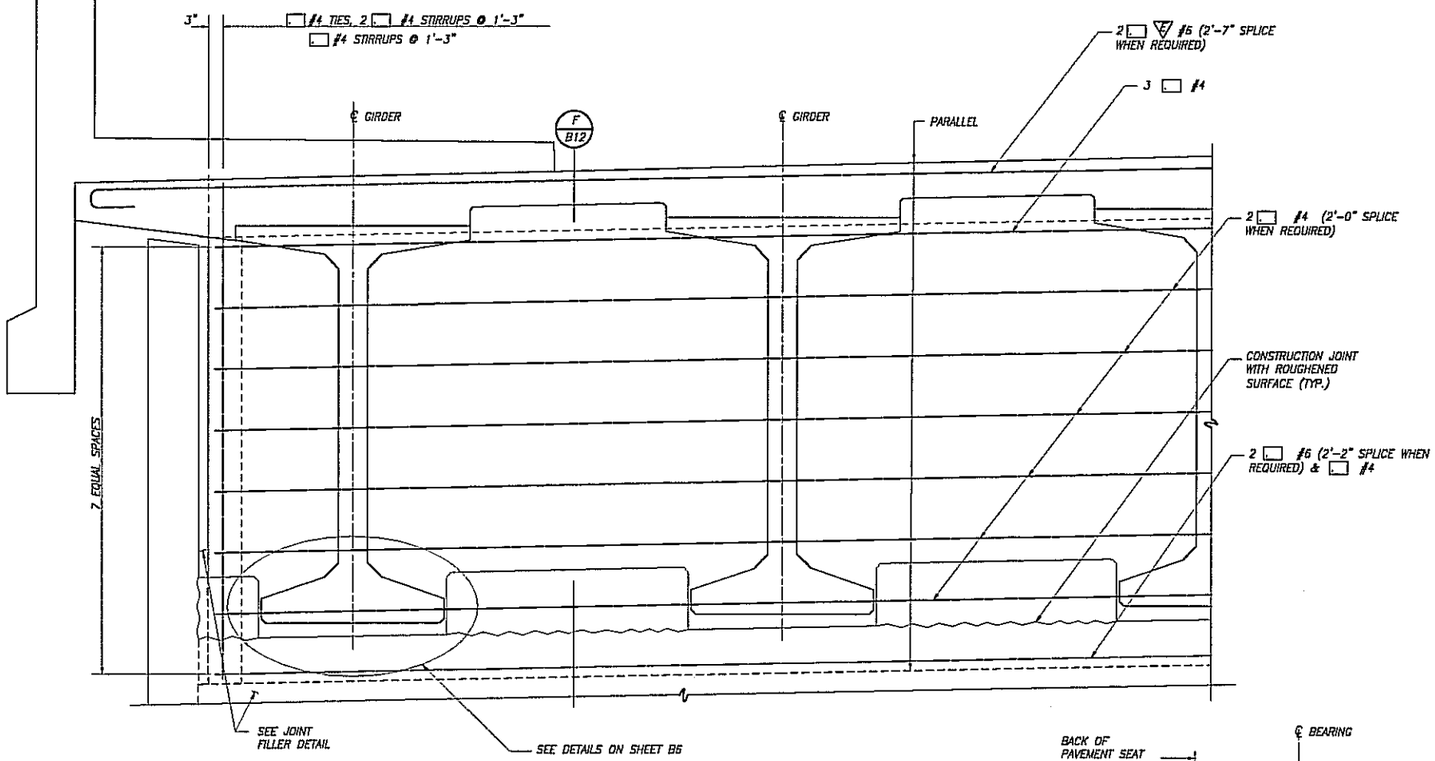

TYPICAL END DIAPHRAGM
3/4"=1'-0"

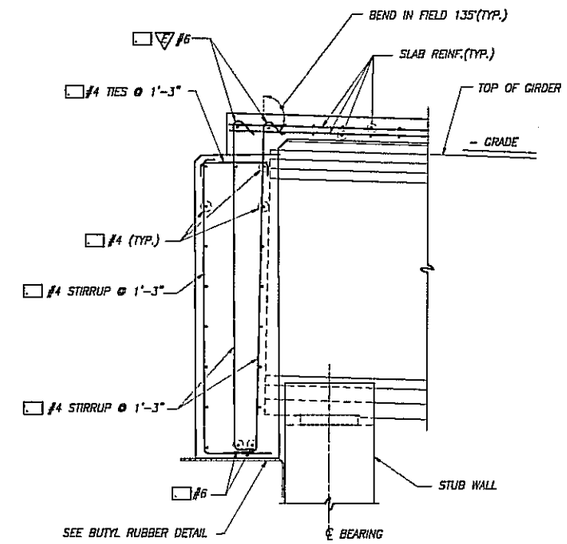

F B12 SECTION
3/4"=1'-0"

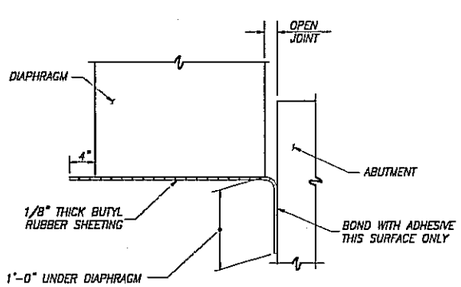

NOTE:
GIRDERS SHALL BE HELD RIGIDLY IN PLACE WHEN DIAPHRAGMS ARE PLACED.

ELEVATION BUTYL RUBBER @ DIAPHRAGM
1"=1'-0"

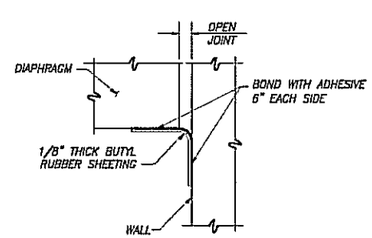

PLAN VIEW BUTYL RUBBER AT VERTICAL JOINTS
1"=1'-0"

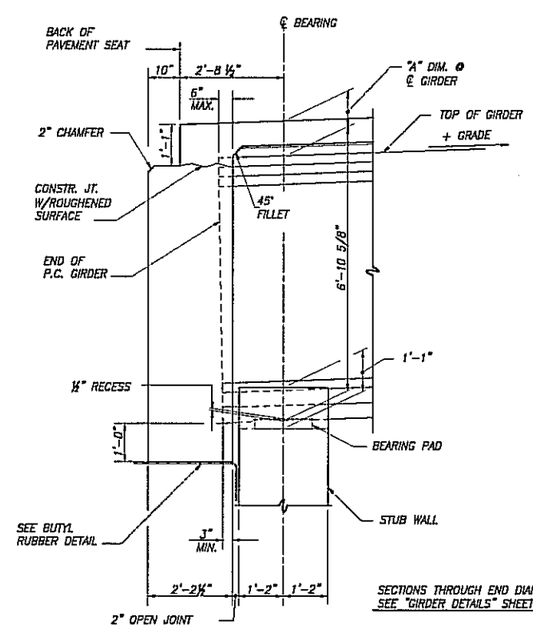

SECTIONS THROUGH END DIAPHRAGMS AT END PIERS
SEE "GIRDER DETAILS" SHEET FOR DIMENSION "A".

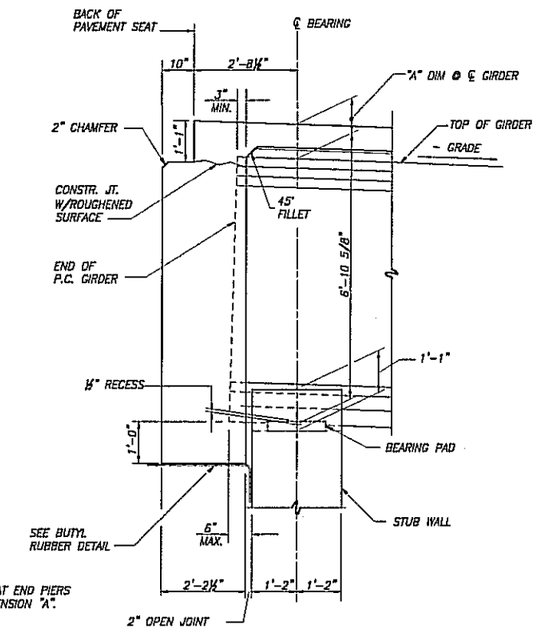

END DIAPHRAGM GEOMETRY
1/2"=1'-0"

50% SUBMITTAL

DESIGNED	GD, DS
DRAWN	JP, TR
CRP	341322
HOR.	AS NOTED
VERT.	AS NOTED
DATE	6/12/06
DWG:	B12
SHEET 43	OF

CALL 48 HOURS BEFORE YOU DIG 1-800-553-4344 "It's the Law" NORTHWEST UTILITIES NOTIFICATION CENTER

DOUGLAS W. SARGENTSON P.E. STATE OF WASHINGTON 23158 PROFESSIONAL ENGINEER
EXPIRES OCT. 22, 2006

ENGINEERING PROGRAM
DESIGN SECTION

KLINELINE BRIDGE
END DIAPHRAGM ON GIRDER DETAILS

proud past, promising future
CLARK COUNTY WASHINGTON

Plotted on Jun 12, 2006 - 10:27am, Modified 06-11-06
H:\Project-Files\2003\05158 - Kineline Bridge Replacement\AutoCAD FILES\ B12

FED AID # BRM-4253 (012)

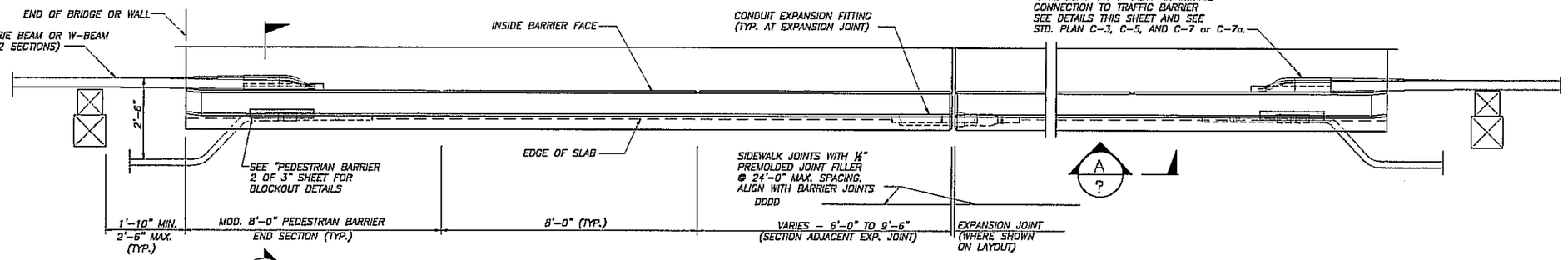

PLAN
PEDESTRIAN BARRIER

BARRIER CONTINUOUS BETWEEN ROADWAY EXPANSION JOINTS. CONSTRUCTION JOINTS WITH SHEAR KEYS ARE PERMISSIBLE AT DUMMY JOINT LOCATIONS. FORM JOINTS BETWEEN DUMMY JOINTS SHALL NOT BE PERMITTED.

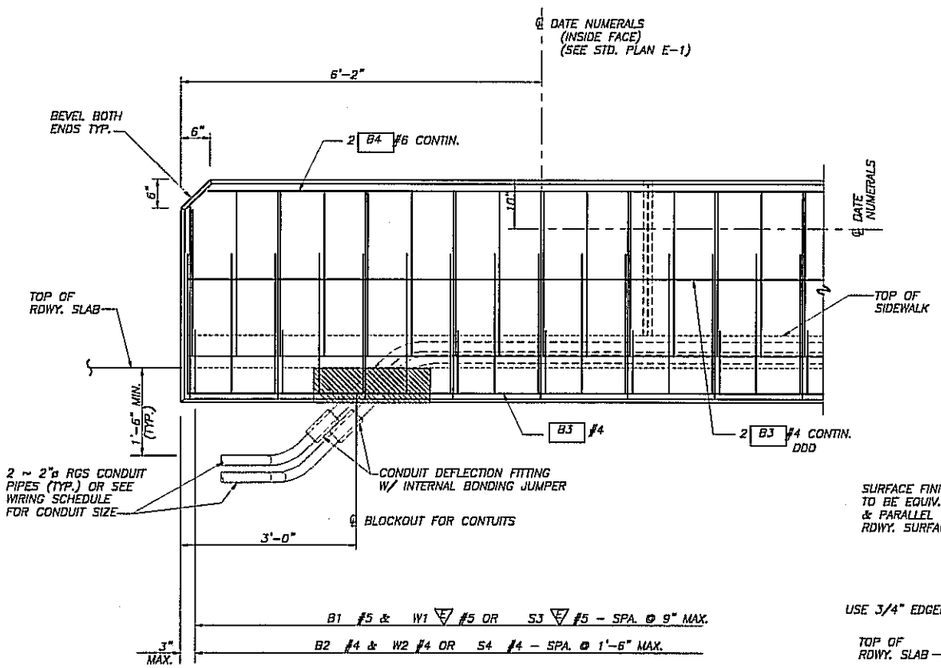

OUTSIDE ELEVATION
END OF MODIFIED PEDESTRIAN BARRIER

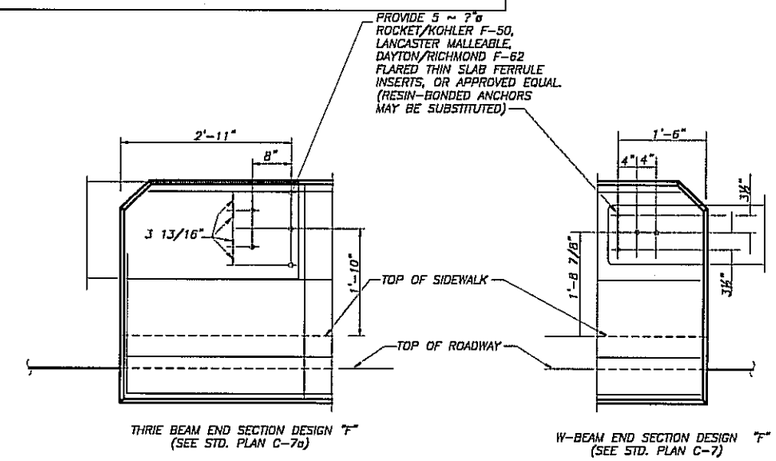

OUTSIDE ELEVATION PEDESTRIAN BARRIER
GUARDRAIL CONNECTION

(WHERE SHOWN ON LAYOUT)

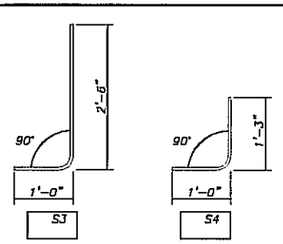

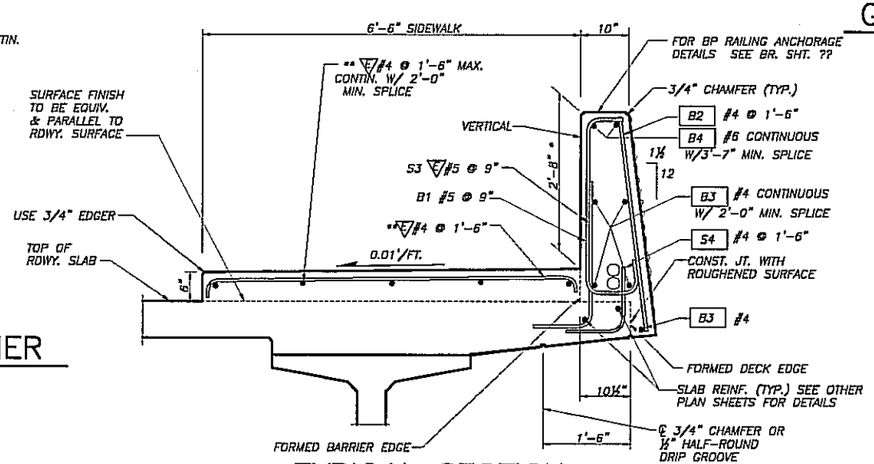

TYPICAL SECTION
PEDESTRIAN BARRIER

50% SUBMITTAL

DESIGNED	GD, DS
DRAWN	JP, TR
CRP	341322
HOR.	AS NOTED
VERT.	AS NOTED
DATE	6/12/06
DWG:	B13
SHEET 44	OF

CALL 48 HOURS BEFORE YOU DIG 1-800-553-4344 "It's the Law" NORTHWEST UTILITIES NOTIFICATION CENTER

BARRY LYNN P.E. STATE OF WASHINGTON BRIDGE & STRUCTURE ENGINEERING 12993 OCT. 22, 2006

ENGINEERING PROGRAM
DESIGN SECTION

KLINELINE BRIDGE
PEDESTRAIN BARRIER DETAILS 1 OF 3

proud past, promising future

CLARK COUNTY WASHINGTON

Plotted on Jun 12, 2006 - 10:27am, Modified 06-11-06
H:\Project-files\2005\05198 - Klineline Bridge Replacement\AutoCAD FILES\ B13

FED AID # BRM-4253 (012)

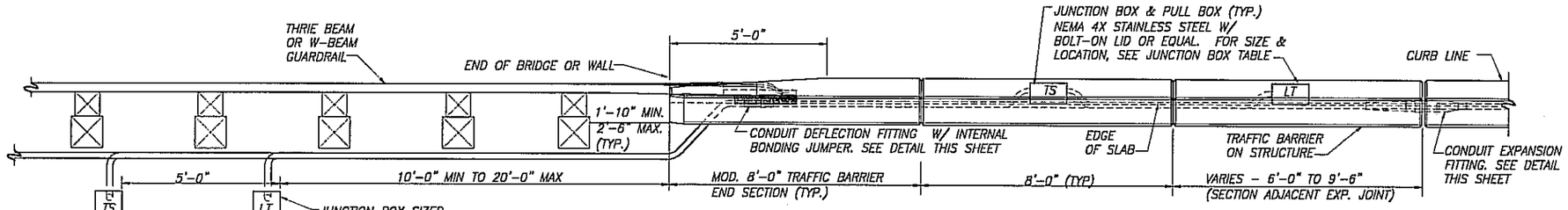

PLAN – TRAFFIC BARRIER

TYP. @ END OF MODIFIED TRAFFIC BARIER END SECTION WHERE THRIE BEAM END SECTION "DESIGN F" STD. PLAN C-7a OR GUARDRAIL END SECTION "DESIGN D OR F" STD PLAN C-5 IS USED

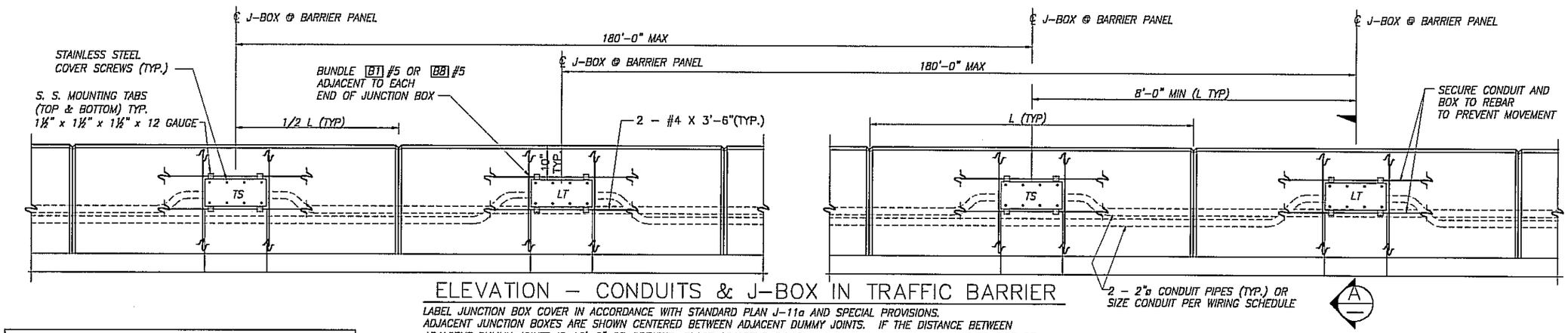

ELEVATION – CONDUITS & J-BOX IN TRAFFIC BARRIER

LABEL JUNCTION BOX COVER IN ACCORDANCE WITH STANDARD PLAN J-11a AND SPECIAL PROVISIONS.
ADJACENT JUNCTION BOXES ARE SHOWN CENTERED BETWEEN ADJACENT DUMMY JOINTS. IF THE DISTANCE BETWEEN ADJACENT DUMMY JOINTS IS 16'-0" OR GREATER, PLACE ADJACENT JUNCTION BOXES SYMETRICALLY ON EITHER SIDE OF THE CENTER OF ONE DUMMY PANEL WHILE MAINTAINING 8'-0" MINIMUM BETWEEN CENTER LINES OF THE JUNCTION BOXES.

NOTE TO DESIGNERS

MODIFY THE FOLLOWING TO MATCH PROJECT REQUIREMENTS:
1. BARRIER END SECTION.
2. REMOVE GUARDRAIL IF NOT CONNECTED TO BRIDGE ITEM.
3. CONDUIT ALIGNMENT

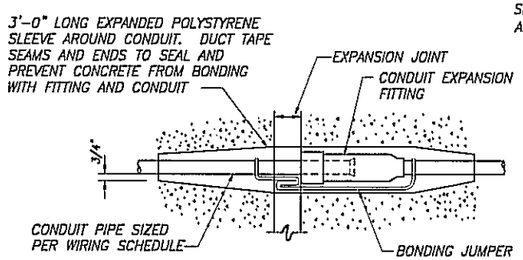

CONDUIT EXPANSION FITTING

CONDUIT FITTING – (TYPE AX FOR MOVEMENT OF ± 2") AT BRIDGE EXPANSION JOINTS

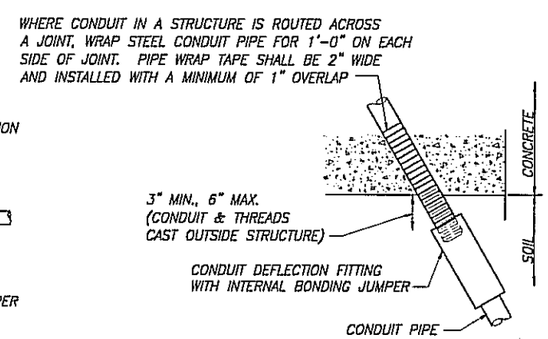

CONDUIT DEFLECTION FITTING A

CONDUIT FITTING – TYPE DX FOR DEFLECTION OF 30° AND ?" MOVEMENT. PLACE AT CONDUIT PIPE EXIT FROM STRUCTURE

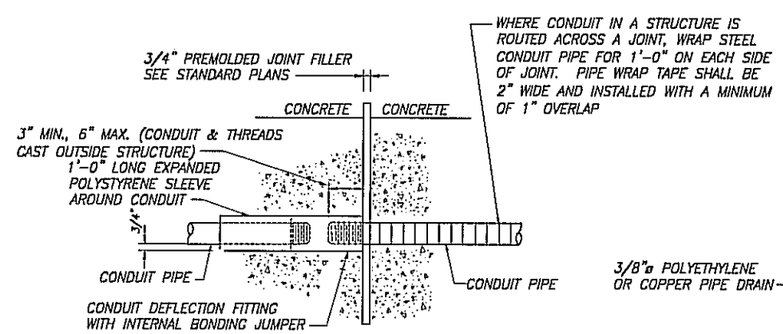

CONDUIT DEFLECTION FITTING B

CONDUIT FITTING – TYPE DX FOR DEFLECTION OF 30° AND 3/4" MOVEMENT. CONDUIT PIPES PLACED THROUGH RETAING WALL TRAFFIC BARRIER SHALL BE FITTED WITH DEFLECTION FITTINGS AT A MAXIMUM SPACING OF 120 FEET. THE DEFLECTION FITTINGS SHALL BE PLACED AT THE TRAFFIC BARRIER OPEN JOINT THAT COINCIDES WITH THE RETAINING WALL STEM EXPANSION JOINT NEAREST TO THE TRANSVERSE CONSTRUCTION JOINT IN THE WALL FOOTING.

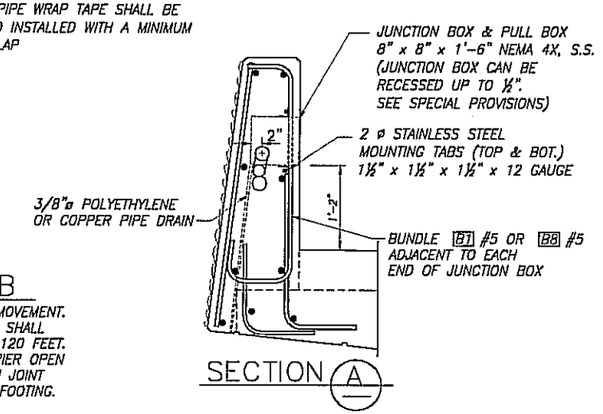

SECTION A

50% SUBMITTAL

DESIGNED	GD, DS
DRAWN	JP, TR
CRP	341322
HOR.	AS NOTED
VERT.	AS NOTED
DATE	6/12/06
DWG:	B15
SHEET 46	OF

CALL 48 HOURS BEFORE YOU DIG 1-800-553-4344 "It's the Law" NORTHWEST UTILITIES NOTIFICATION CENTER

STATE OF WASHINGTON DOUGLAS B. MACKINNON P.E. 22366 PROFESSIONAL ENGINEER
EXPIRES OCT. 22, 2006

ENGINEERING PROGRAM
DESIGN SECTION

KLINELINE BRIDGE
PEDESTRAIN BARRIER DETAILS
3 OF 3

proud past, promising future
CLARK COUNTY WASHINGTON

Plotted on Jun 12, 2006 - 10:27am, Modified 05-11-06
H:\Project-Files\2003\03198 - Klineline Bridge Replacement\AutoCAD FILES\ B15

FED AID # BRM-4253 (012)

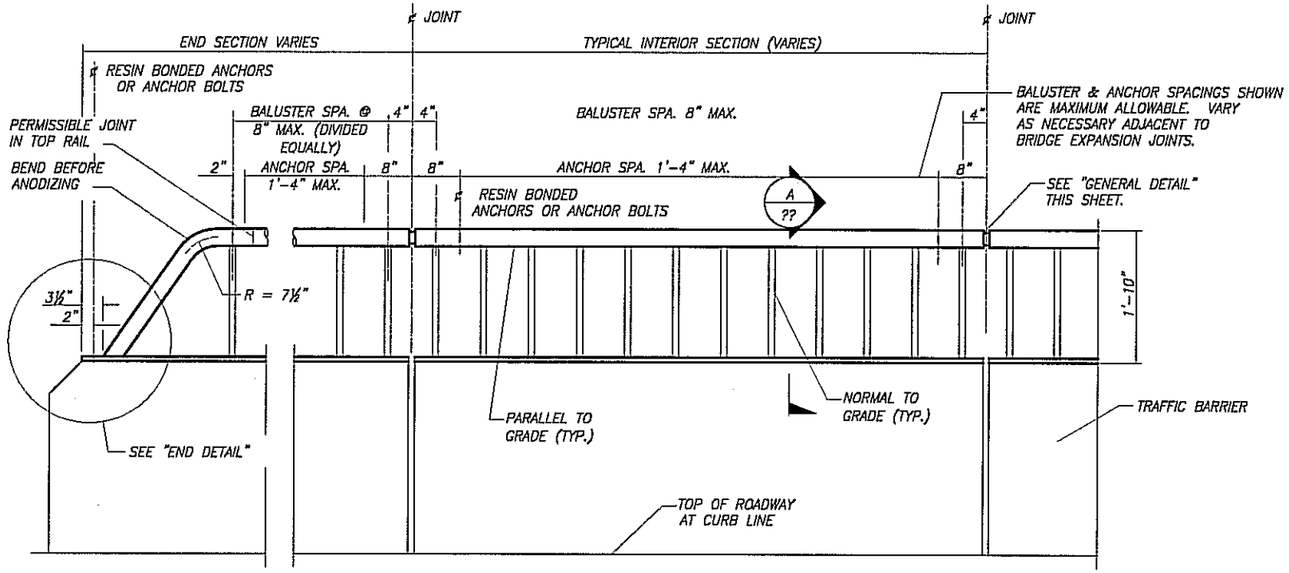

ELEVATION

BALUSTER AND GUARDRAIL SECTION ATTACHMENT DETAILS NOT SHOWN.

NOTES

1. PIPE RAILING, PIPE RAILING SPLICES, COVER PLATES AND BOTTOM EXTRUDED CHANNELS SHALL BE BENT TO THE HORIZONTAL CURVE WHERE THE RADIUS OF CURVATURE IS LESS THAN 200 FEET.
2. SHOP DRAWINGS OF RAILING SHALL BE SUBMITTED FOR APPROVAL SHOWING COMPLETE DIMENSIONS AND DETAILS OF FABRICATION AND INCLUDING AN ERECTION DIAGRAM. MATERIAL BEING USED SHALL BE SPECIFIED IN THE SHOP DRAWINGS.
3. PIPE RAILING, PIPE RAILING SPLICES, COVER PLATES AND BOTTOM EXTRUDED CHANNELS MAY BE HEATED TO NOT MORE THAN 400°F FOR A PERIOD NOT TO EXCEED 30 MINUTES TO FACILITATE FORMING OR BENDING HORIZONTAL CURVATURE.
4. CUTTING SHALL BE DONE BY SAWING OR MILLING AND ALL CUTS SHALL BE TRUE AND SMOOTH. FLAME CUTTING WILL NOT BE PERMITTED.
5. WELDING OF ALUMINUM SHALL CONFORM TO STD. SPEC. SECTION 9-28.14(3).
6. AFTER FABRICATION, POSTS SHALL BE HEAT TREATED IN ACCORDANCE WITH SECTION 6.5 OF THE AASHTO STANDARD SPECIFICATIONS FOR STRUCTURAL SUPPORTS FOR HIGHWAY SIGNS, LUMINARIES, AND TRAFFIC SIGNALS DATED 2001 AND INTERIMS THROUGH 2002.
7. ALL ALUMINUM PARTS SHALL BE GIVEN A (CLEAR OR BRONZE) ANODIC COATING OF AT LEAST 0.0006 INCHES THICK AND SEALED TO MEET THE REQUIREMENTS OF ASTM B 580 WITH A UNIFORM FINISH.
8. PIPE RAILING, PIPE BALUSTERS, PIPE RAILING SPLICES, SHALL BE ADEQUATELY WRAPPED TO INSURE SURFACE PROTECTION DURING HANDLING AND TRANSPORTATION TO THE JOB SITE.

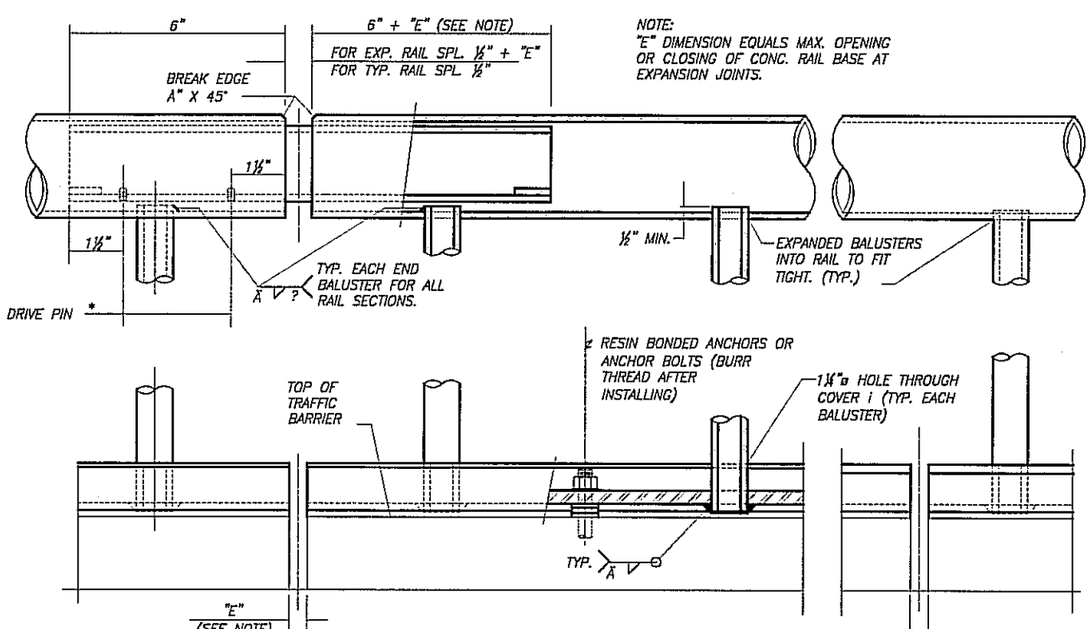

GENERAL DETAIL

50% SUBMITTAL

DESIGNED	GD, DS
DRAWN	JP, TR
CRP	341.322
HOR.	AS NOTED
VERT.	AS NOTED
DATE	6/12/06
DWG:	B16
SHEET 47	OF

CALL 48 HOURS BEFORE YOU DIG 1-800-553-4344 "It's the Law" NORTHWEST UTILITIES NOTIFICATION CENTER

STATE OF WASHINGTON DENNIS L. SUDKAMP P.E. 24158 REGISTERED PROFESSIONAL ENGINEER
DATE: OCT. 22, 2000

ENGINEERING PROGRAM
DESIGN SECTION

KLINELINE BRIDGE
BRIDGE RAILING TYPE BP DETAILS
1 OF 2

proud past, promising future
CLARK COUNTY WASHINGTON

Plotted on Jun 12, 2006 - 10:27am, Modified 05-11-06
H:\Project-Files\2005\05198 - Klineline Bridge Replacement\AutoCAD FILES\ B16

FED AID # BRM-4253 (012)

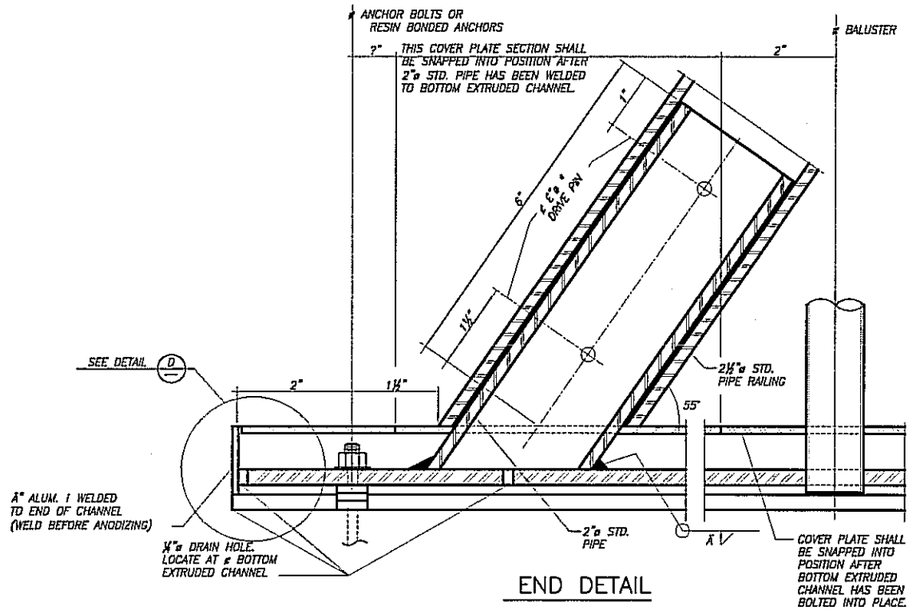

END DETAIL

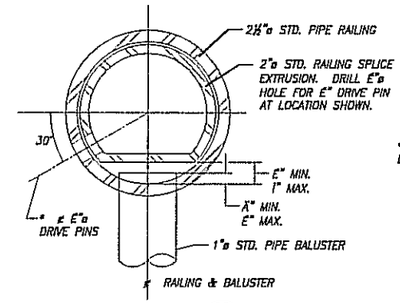

DETAIL B
OPTION #1

* LOCATE ON OPPOSITE SIDE OF TRAFFIC. DRIVE PINS SHALL BE DRIVEN FLUSH WITH THE OUTSIDE FACE OF THE RAILING.

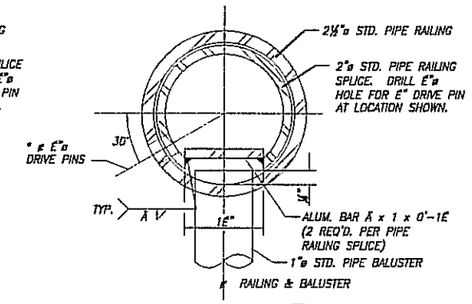

DETAIL B
OPTION #2

* LOCATE ON OPPOSITE SIDE OF TRAFFIC. DRIVE PINS SHALL BE DRIVEN FLUSH WITH THE OUTSIDE FACE OF THE RAILING.

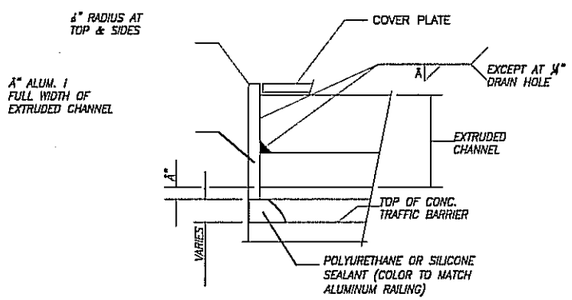

DETAIL D
DRAIN HOLES NOT SHOWN

	PART	MATERIAL SPECIFICATION
MAT'L		
ALUMINUM	PIPES (SEE NOTE 8)	ASTM B221– 6005–T5 ASTM B 241 OR B 429 6061–T6
ALUMINUM	EXTRUDED CHANNELS, COVER PLATES & BAR	ASTM B221– 6005–T5
STEEL	ANCHOR BOLTS, NUTS & WASHERS	AASHTO M164 (GALVANIZE IN ACCORDANCE WITH AASHTO SPECIFICATION M232)
STEEL	STRIP	ASTM A36
STEEL	DRIVE PINS	ASTM A–276 TYPE 302 STAINLESS STEEL

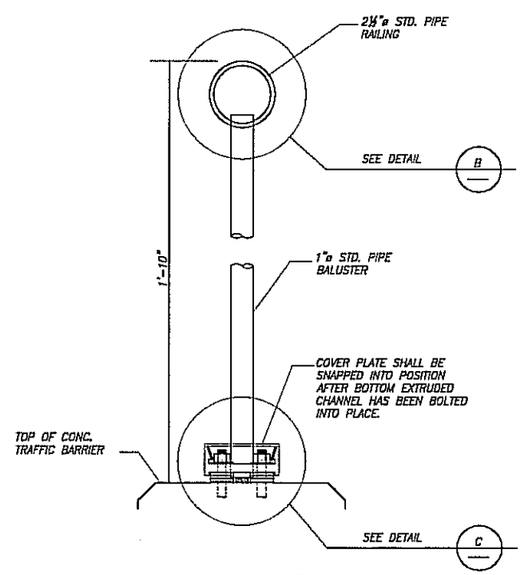

SECTION A
B16

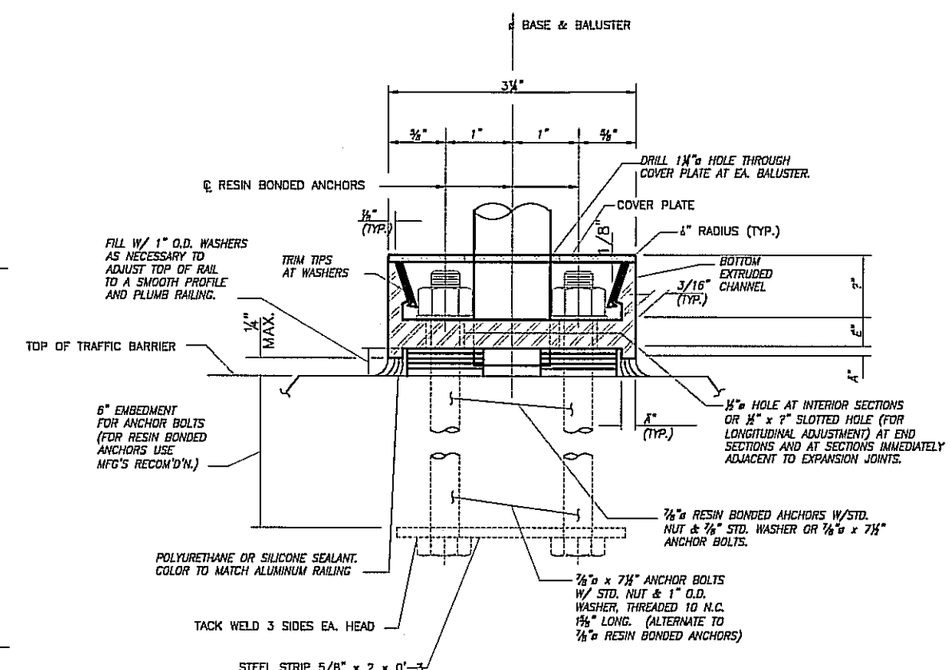

DETAIL C

ANCHOR BOLTS SHALL BE POSITIONED IN A JIG DURING WELDING.

50% SUBMITTAL

DESIGNED	GD, DS
DRAWN	JP, TR
CRP	341322
HOR.	AS NOTED
VERT.	AS NOTED
DATE	6/12/06
DWG:	B17
SHEET 48	OF

CALL 48 HOURS BEFORE YOU DIG 1-800-553-4344 "It's the Law" NORTHWEST UTILITIES NOTIFICATION CENTER

SARKINEN P.E. WASHINGTON HOFFMAN & ASSOCIATES, INC. PROFESSIONAL ENGINEERS STATE OF WASHINGTON
EXPIRES OCT. 02, 2006

ENGINEERING PROGRAM
DESIGN SECTION

KLINELINE BRIDGE
BRIDGE RAILING TYPE BP DETAILS
2 OF 2

proud past, promising future
CLARK COUNTY WASHINGTON

Plotted on Jun 12, 2006 – 10:27am, Modified 06-11-06
H:\Project-Files\2005\05198 – Klineline Bridge Replacement\AutoCAD FILES\ B17

FED AID # BRM-4253 (012)

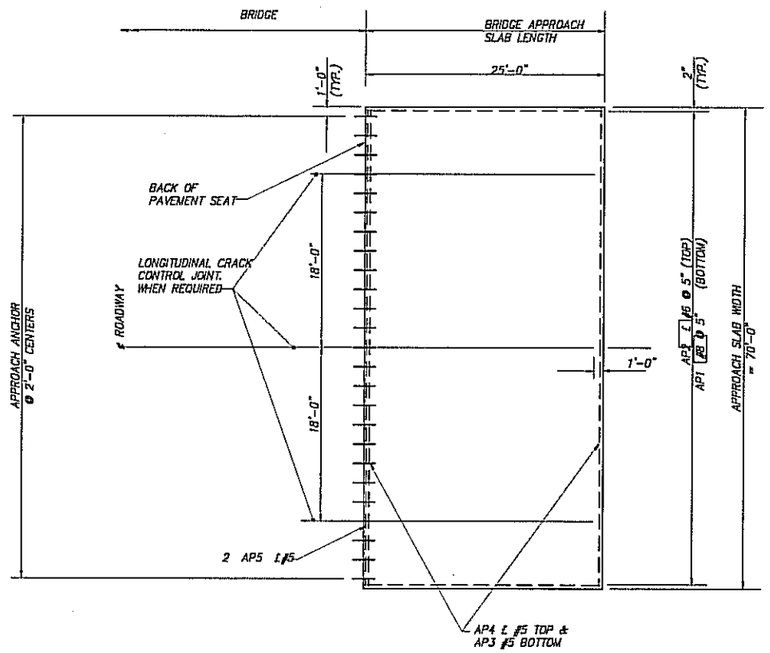

PLAN

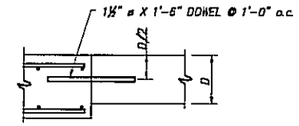

TYPICAL PCCP ROADWAY DOWEL BAR DETAIL

INSERT DOWELS PARALLEL TO CENTER LINE ALONG TRANSVERSE CONSTRUCTION JOINT.

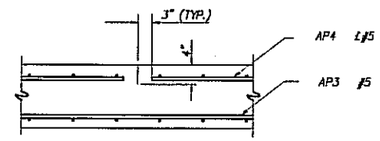

TYPICAL LONGITUDINAL CRACK CONTROL JOINT DETAIL

NOTES:

1. ALL EDGES OF BRIDGE APPROACH SLAB SHALL HAVE ½" RADIUS.
2. LONGITUDINAL JOINTS SHALL BE PLACED ON LANE LINES AND SHALL BE CONSTRUCTED AND SEALED IN ACCORDANCE WITH STD. SPEC. SECTION 5-05.3(8). JOINTS MAY BE EITHER A SAW CUT CRACK CONTROL JOINT OR A CONSTRUCTION JOINT. SAWCUT JOINTS SHALL TERMINATE 1'-0" BEFORE REACHING EDGE OF SLAB AND MUST BE SAW CUT AS SOON AS POSSIBLE AFTER PLACEMENT OF CONCRETE.

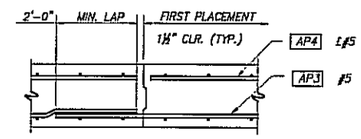

TYPICAL LONGITUDINAL CONSTRUCTION JOINT

EDGE FIRST POUR ONLY WITH A" RADIUS.

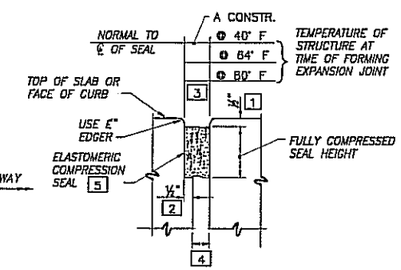

COMPRESSION SEAL

CONCRETE OPENING

1. USE ½" FOR ALL SEALS.
2. USE ½" FOR ALL SEALS.
3. COMPUTE "A CONSTR." PER EQUATION (12) @ 40° F, 64° F, AND 80° F
4. TO BE CHECKED BY THE DESIGNER. SHALL BE LARGE ENOUGH TO PREVENT CLOSURE UNDER THERMAL MOVEMENTS.
5. SEE BDM 8.4.1.A.1 AND EXAMPLE 8.4-B1 FOR COMPRESSION SEAL DESIGN AND SEE "COMPRESSION SEAL" TABLE ON THIS SHEET.

COMPRESSION SEAL TABLE

D.S. BROWN		WATSON BOWMAN ACME	
SEAL	W (in.)	SEAL	W (in.)
CV-2000	2	WA-200	2
CV-2502	2½	WA-250	2½
CV-3000	3	WA-300	3
CV-3500	3½	WA-350	3½
CV-4000	4	WA-400	4

TESTING SHALL BE PER AASHTO M-220 PRIOR TO USE.

NOTE:
COMPRESSION SEALS GREATER THAN FOUR INCHES WIDE SHOULD NOT BE USED

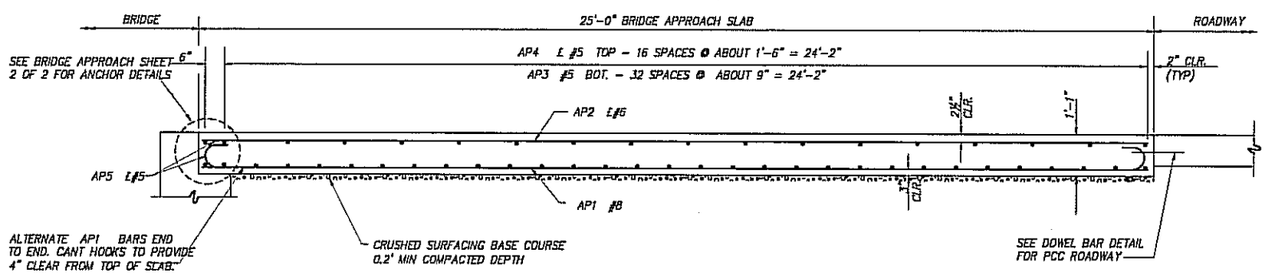

LONGITUDINAL SECTION

BAR LIST FOR STANDARD 10' X 25' BRIDGE APPROACH SLAB QUANTITY MODULE				
LOCATION	MARK #	SIZE	NO.	LENGTH
LONGITUDINAL BOTTOM	AP1	8	27	25'-7"
LONGITUDINAL TOP	AP2	£6	24	24'-8"
TRANSVERSE BOTTOM	AP3	5	33	9'-8"
TRANSVERSE TOP	AP4	£5	17	9'-8"
TRANSVERSE END BAR	AP5	£5	2	9'-8"

APPROXIMATE QUANTITIES (PER SY) FOR SLAB (BASED ON QUANTITY MODULE)	
SLAB EPOXY COATED REINFORCING BARS (TOP MAT)	38.52 LBS/SY
SLAB REINFORCING BARS (BOTTOM MAT)	79.80 LBS/SY
CONCRETE (CU. YDS.)	0.361 CY/SY
APPROACH ANCHORS AND PCC ROADWAY DOWELS	AS REQUIRED
10 - AP6 £#5 (IF REQUIRED)	105 LBS.

BENDING DETAIL FOR QUANTITIES

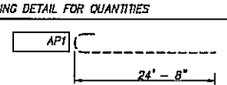

ALL REINFORCING BARS SHOWN ON THIS SHEET SHALL BE AASHTO M-31 UNLESS NOTED OTHERWISE.

£ = EPOXY COATED REINFORCING STEEL

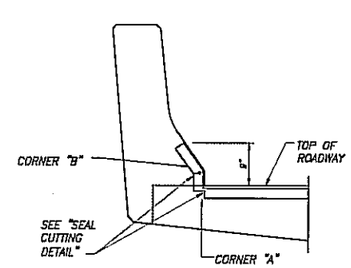

SECTION A

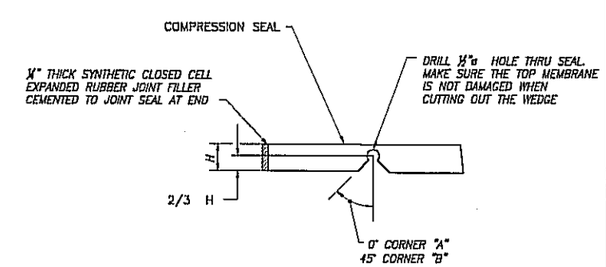

SEAL CUTTING DETAIL

50% SUBMITTAL

DESIGNED	GD, DS
DRAWN	JP, TR
CRP	341.322
HOR.	AS NOTED
VERT.	AS NOTED
DATE	6/12/06
DWG:	B18
SHEET 49	OF

CALL 48 HOURS BEFORE YOU DIG 1-800-553-4344 "It's the Law" NORTHWEST UTILITIES NOTIFICATION CENTER

STATE OF WASHINGTON — GARY A. NEU P.E. — 36136 — REGISTERED PROFESSIONAL ENGINEER — DATE OCT. 12, 2006

ENGINEERING PROGRAM
DESIGN SECTION

KLINELINE BRIDGE
APPROACH SLAB AND COMPRESSION SEAL DETAILS

proud past, promising future
CLARK COUNTY WASHINGTON

Plotted on Jun 12, 2006 - 10:27am, Modified 06-11-06
H:\Project-Files\2005\05198 - Kineline Bridge Replacement\AutoCAD FILES\ B18

FED AID # BRM-4253 (012)

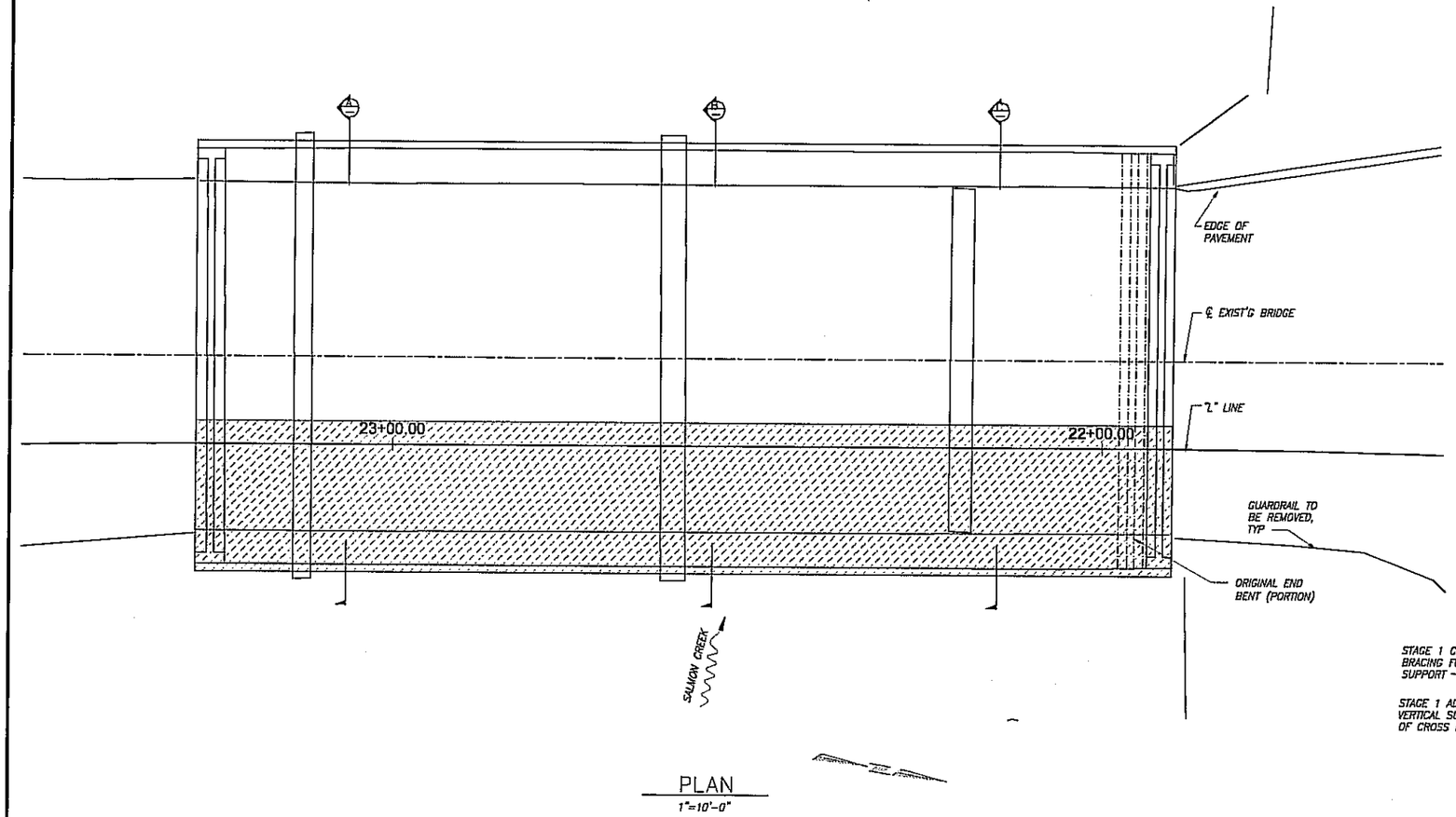

PLAN
1"=10'-0"

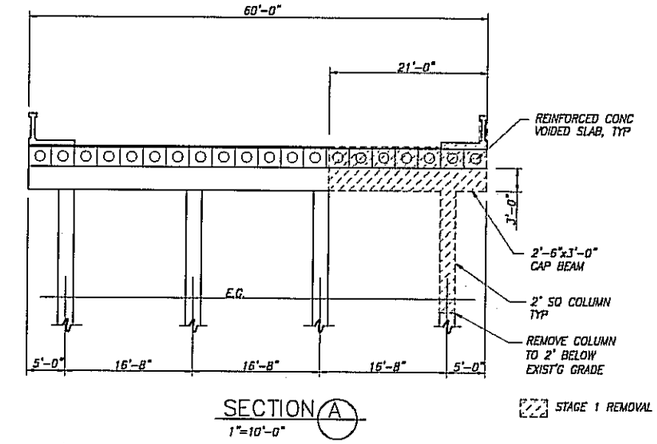

SECTION A
1"=10'-0"

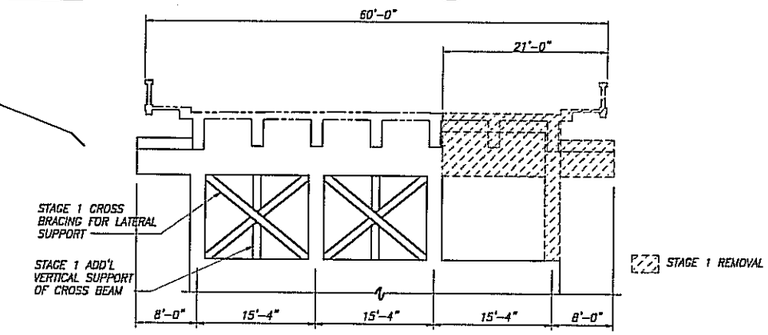

SECTION B
1"=10'-0"

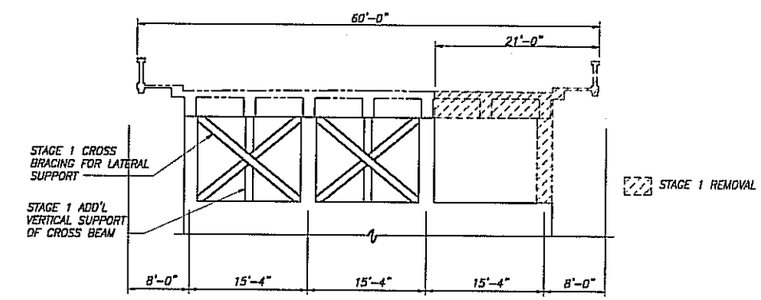

SECTION C
1"=10'-0"

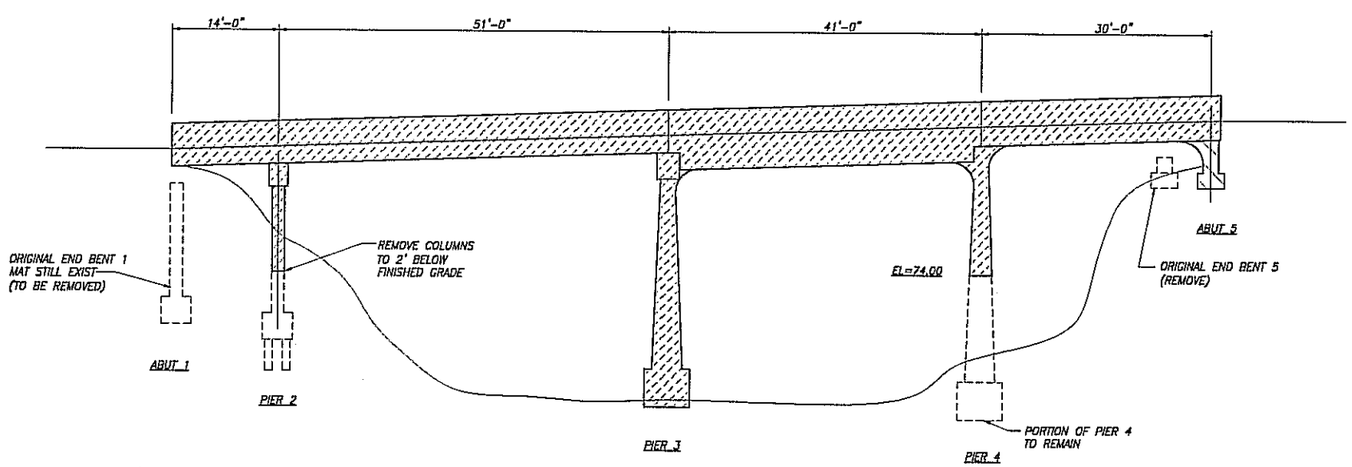

ELEVATION
1"=10'-0"

50% SUBMITTAL

DESIGNED	GD, DS
DRAWN	JP, TR
CRP	341322
HOR.	AS NOTED
VERT.	AS NOTED
DATE	6/12/06
DWG:	B19
SHEET 50	OF

CALL 48 HOURS BEFORE YOU DIG 1-800-553-4344 "It's the Law" NORTHWEST UTILITIES NOTIFICATION CENTER

DOUGLAS W. SABRATNEY P.E. STATE OF WASHINGTON 21196 PROFESSIONAL ENGINEER EXPIRES OCT. 22, 2006

ENGINEERING PROGRAM
DESIGN SECTION

KLINELINE BRIDGE
BRIDGE REMOVAL

proud past, promising future

CLARK COUNTY WASHINGTON

Plotted on Jun 12, 2006 – 10:27am, Modified 06-11-06
H:\Project-Files\2005\051198 – Kline Bridge Replacement\AutoCAD FILES\ B19

FED AID # BRM-4253 (012)

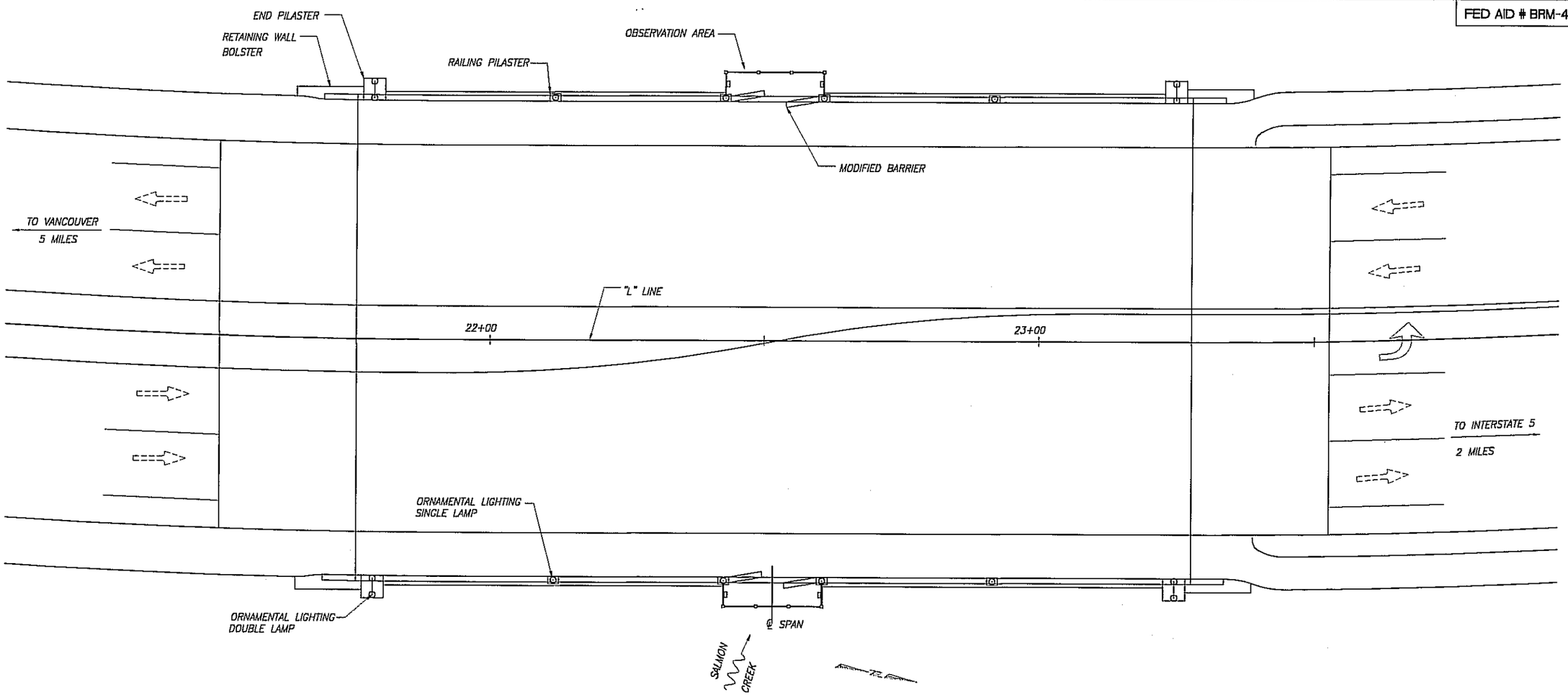

PLAN
1"=10'-0"

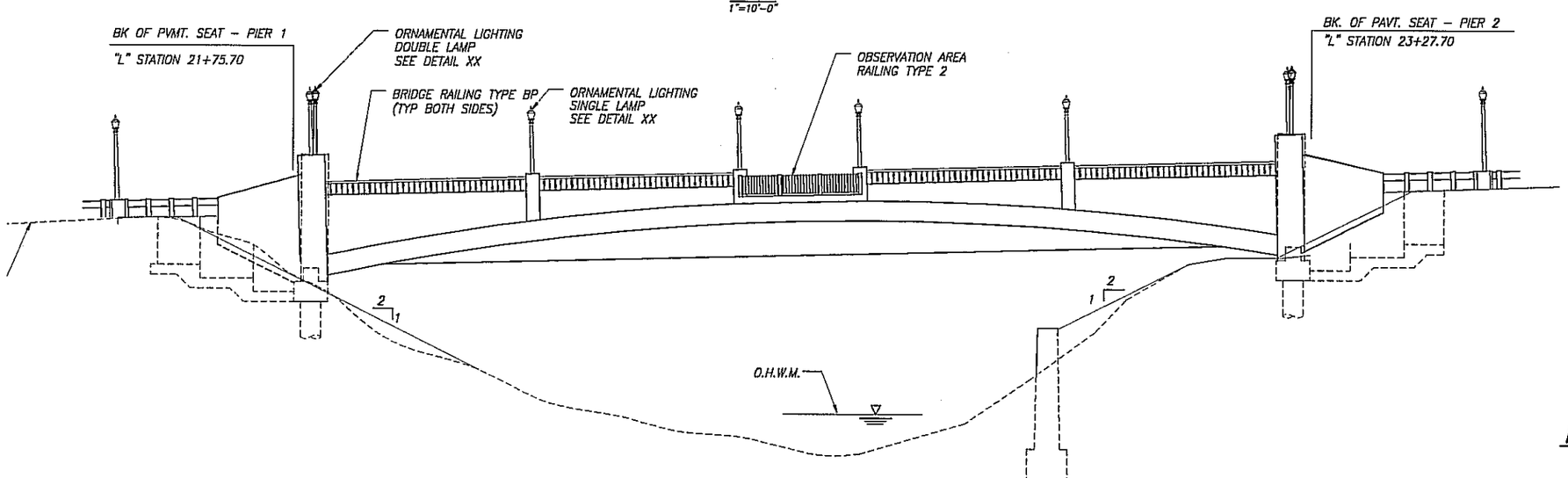

ELEVATION
1"=10'-0"

BID ALTERNATE

50% SUBMITTAL

DESIGNED	GD, DS
DRAWN	JP, TR
CRP	341322
HOR.	AS NOTED
VERT.	AS NOTED
DATE	6/12/06
DWG:	B20
SHEET 51	OF

CALL 48 HOURS BEFORE YOU DIG 1-800-553-4344 "It's the Law" NORTHWEST UTILITIES NOTIFICATION CENTER

DOUGLAS L. SUBKLEWE P.E. STATE OF WASHINGTON 18195 PROFESSIONAL ENGINEER EXPIRES OCT. 02, 2006

ENGINEERING PROGRAM
DESIGN SECTION

KLINELINE BRIDGE
FINISH PLAN AND ELEVATION

proud past, promising future

CLARK COUNTY WASHINGTON

Plotted on Jun 12, 2006 – 10:27am, Modified 06-11-06
H:\Project-Files\2003\03198 – Kineline Bridge Replacement\AutoCAD FILES\ B20

50% SUBMITTAL

GENERAL NOTES:

1. ATTENTION: WASHINGTON LAW REQUIRES YOU TO FOLLOW RULES ADOPTED BY THE NORTHWEST UTILITY NOTIFICATION CENTER. YOU MAY OBTAIN COPIES OF THESE RULES BY CALLING THE CENTER. THE CENTER BUSINESS NUMBER IS 1-800-553-4344.
2. THE CONTRACTOR SHALL BE SOLELY RESPONSIBLE FOR HAVING UTILITIES LOCATED PRIOR TO CONSTRUCTION ACTIVITIES.
3. THE CONTRACTOR SHALL IMMEDIATELY REPORT ANY DAMAGED UTILITIES TO THE AFFECTED UTILITY SERVICE.
4. ALL UTILITIES SHOWN ON THESE PLANS ARE APPROXIMATE LOCATIONS ONLY AND MUST BE VERIFIED IN THE FIELD PRIOR TO CONSTRUCTION.
5. THE BASE SURVEY FOR THIS PROJECT WAS COMPLETED BY MINISTER-GLAESER SURVEYING INC. ALL ELEVATIONS ARE BASED ON THE CLARK COUNTY DATUM AT THE SW CORNER OF THE KLINELINE BRIDGE (NGVD 29(47), NAD 83).
6. IN WATER WORK PERIOD IS JULY 15 - SEPTEMBER 30.

ABBREVIATIONS:

APPD	APPROVED
APPROX	APPROXIMATE
AVG	AVERAGE
BOT ELEV	BOTTOM ELEVATION
CL	CENTERLINE
CLSM	CONTROLLED LOW STRENGTH MATERIAL
CONC	CONCRETE
CONT	CONTINUED
CR	CRUSHED ROCK
CULV	CULVERT
DEFL	DEFLECTION
D	DEPTH
DET	DETAIL
DIA	DIAMETER
D/S	DOWNSTREAM
EF	EACH FACE
EW	EACH WAY
E	EASTING
EL	ELEVATION
ELJ	ENGINEERED LOG JAM
EQ	EQUAL
EXIST	EXISTING
FG	FINISH GRADE
FT	FOOT/FEET
GCS	GRADE CONTROL STRUCTURE
HORIZ	HORIZONTAL
HDPE	HIGH DENSITY POLYETHYLENE
IE	INVERT ELEVATION
LT	LEFT
LWD	LARGE WOODY DEBRIS
MAX	MAXIMUM
MIN	MINIMUM
N	NORTHING
NTS	NOT TO SCALE
O.C.	ON CENTER
OHW	ORDINARY HIGH WATER
PC	POINT OF CURVATURE
PRC	POINT OF REVERSE CURVATURE
PT	POINT OF TANGENCY
PR	PROPOSED
RT	RIGHT
RW	ROOT WAD
SS	SANITARY SEWER
SHT	SHEET(S)
SPECS	SPECIFICATIONS
SPP	SPECIES
SQ FT	SQUARE FOOT/SQUARE FEET
STD	STANDARD
STA	STATION
SD	STORM SEWER
TEMP	TEMPORARY
TCE	TEMPORARY CONSTRUCTION EASEMENT
TOC	TOP OF CONCRETE
TL	TOP OF LOG
TYP	TYPICAL
US	UPSTREAM
VERT	VERTICAL
W	WIDTH
W/	WITH
WBF	WIDTH - BANKFULL
WSE	WATER SURFACE ELEVATION

SHEET INDEX:

SR1	SHEET INDEX, GENERAL NOTES, LEGEND
SR2	ROUGHENED CHANNEL PLAN AND PROFILE RIVER STA 9+20 TO STA 14+60
SR3	ROUGHENED CHANNEL PLAN AND PROFILE RIVER STA 14+60 TO STA 19+80
SR4	CROSS SECTIONS
SR5	TYPICAL CROSS SECTIONS
SR6	GRADE CONTROL STRUCTURE RIVER STA 11+75 DETAILS
SR7	GRADE CONTROL STRUCTURE RIVER STA 14+30 DETAILS
SR8	GRADE CONTROL STRUCTURE RIVER STA 16+00 DETAILS
SR9	GRADE CONTROL STRUCTURE RIVER STA 18+00 DETAILS
SR10	CONSTRUCTED STREAMBED DETAILS
SR11	BANK TREATMENT DETAILS
SR12	STREAM HABITAT ENHANCEMENT DETAILS
SR13	STREAMBED DETAILS
SR14	PLANTING PLAN
SR15	PLANTING PLAN
SR16	PLANTING LEGEND
SR17	PLANTING DETAILS
SR18	STREAM DIVERSION PLAN AND PROFILE
SR19	STREAM DIVERSION PLAN AND PROFILE
SR20	STREAM DIVERSION NOTES AND DETAILS
SR21	EROSION CONTROL PLAN
SR22	EROSION CONTROL PLAN
SR23	EROSION CONTROL DETAILS

DESIGNED	KMV
DRAWN	EES
CRP	
HOR.	SHOWN
VERT.	
DATE	5/26/06
DWG:	SR1
SHEET	X OF X

CALL 48 HOURS BEFORE YOU DIG
1-800-553-4344
"It's the Law"
NORTHWEST NOTIFICATION CENTER

DESIGN & ENGINEERING DIVISION
DESIGN SECTION

SHEET INDEX, GENERAL NOTES, LEGEND

VIGIL AGRIMIS, INC.
Engineering, Landscape Architecture, Environmental Science
818 SE Morrison St., Suite 310
Portland, Oregon
97214
503.274.2010
fax: 503.274.2024
www.vigil-agrimis.com

CLARK COUNTY WASHINGTON

Path: \\KRAGEDO1\CAD\Plot Files Filename: SR1_COVER_KRAGEDO1 Plot date: May 31, 2006-01:06:41pm CAD User: eschult.
Xref Filename: | TITLE_BLK | KRAGEDO1_BASE | KRAGEDO1_SURVEY | KRAGEDO1_DRSB01 | KRAGEDO1_HES |

50% SUBMITTAL

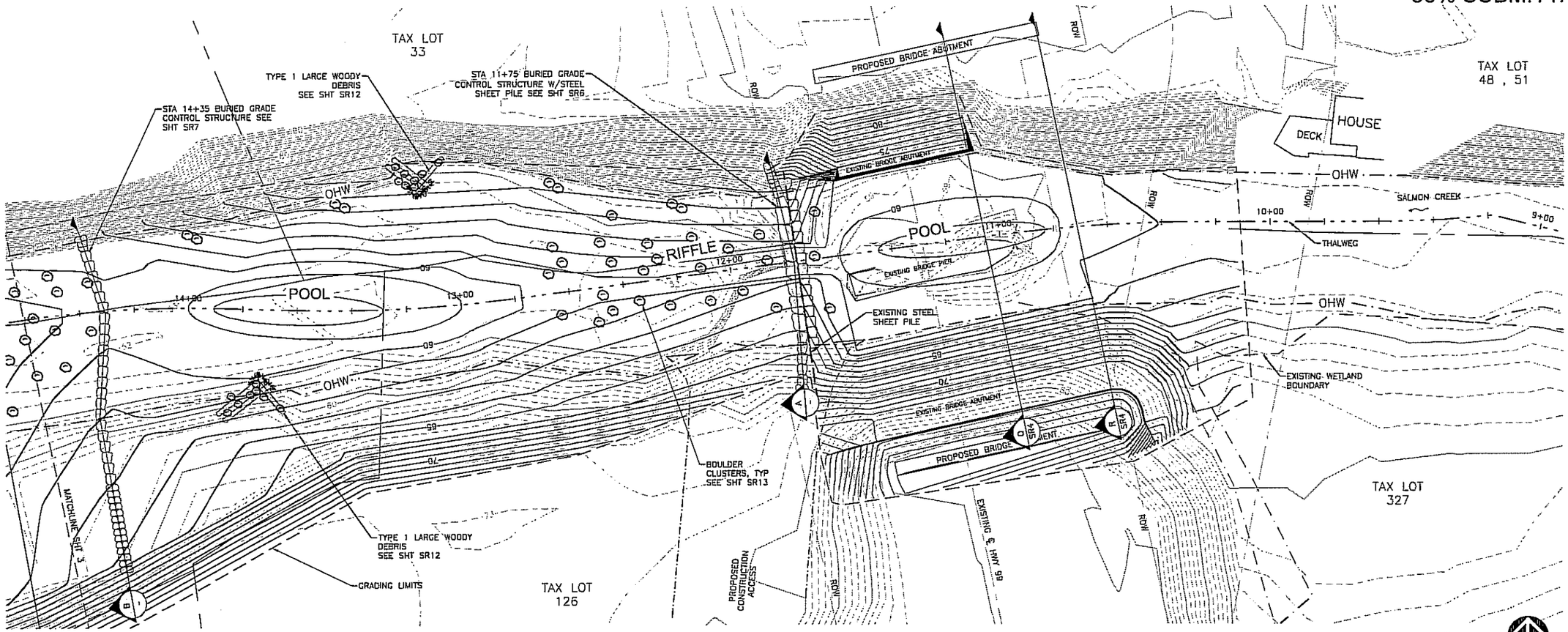

ROUGHENED CHANNEL PLAN - RIVER STA 9+20 TO STA 14+60

SCALE: 1" = 20' (FOR 22X34" SHEETS)

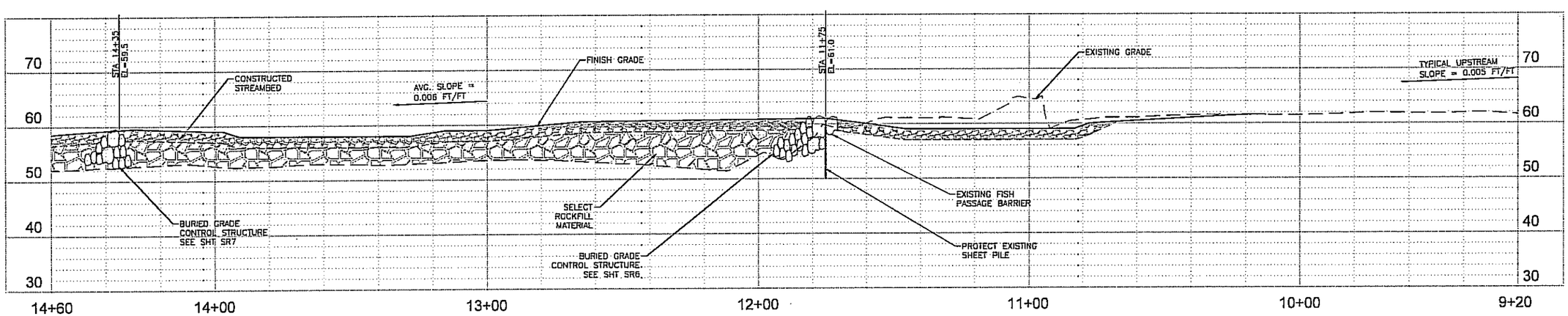

PROFILE AT PROPOSED THALWEG

HORIZONTAL SCALE: 1" = 20' (FOR 22X34" SHEETS)
VERTICAL SCALE: 1" = 10' (FOR 22X34" SHEETS)

DESIGNED	KMV
DRAWN	EES
CRP	
HOR.	SHOWN
VERT.	
DATE	5/26/06
DWG:	SR2
SHEET	X OF X

CALL 48 HOURS BEFORE YOU DIG 1-800-553-4344 "It's the Law" NORTHWEST UTILITY NOTIFICATION CENTER

DESIGN & ENGINEERING DIVISION
DESIGN SECTION

ROUGHENED CHANNEL
PLAN AND PROFILE
RIVER STA 9+20 TO STA 14+60

VIGIL AGRIMIS, INC.
Engineering, Landscape Architecture, Environmental Science
819 SE Morrison St., Suite 310
Portland, Oregon
97214
503.274.2010
fax: 503.274.2024
www.vigil-agrimis.com

CLARK COUNTY WASHINGTON

Path: \\FRACE01\CAD\Vigil Proj. Filename: ER1-3_RIVMAPROF_RIVHCE01 Plot date: May 31, 2006-04:29:17pm CAD User: estrada
Xref Filename: | TITLE_BLK | RIVBASEMAP_BSE | RIVBASEMAP_SURVEY | RIVHCE01_LEC | RIVHCE01_MVE | RIVHCE01_PRE | RIVHCE01_PRE_0-71.DS |

50% SUBMITTAL

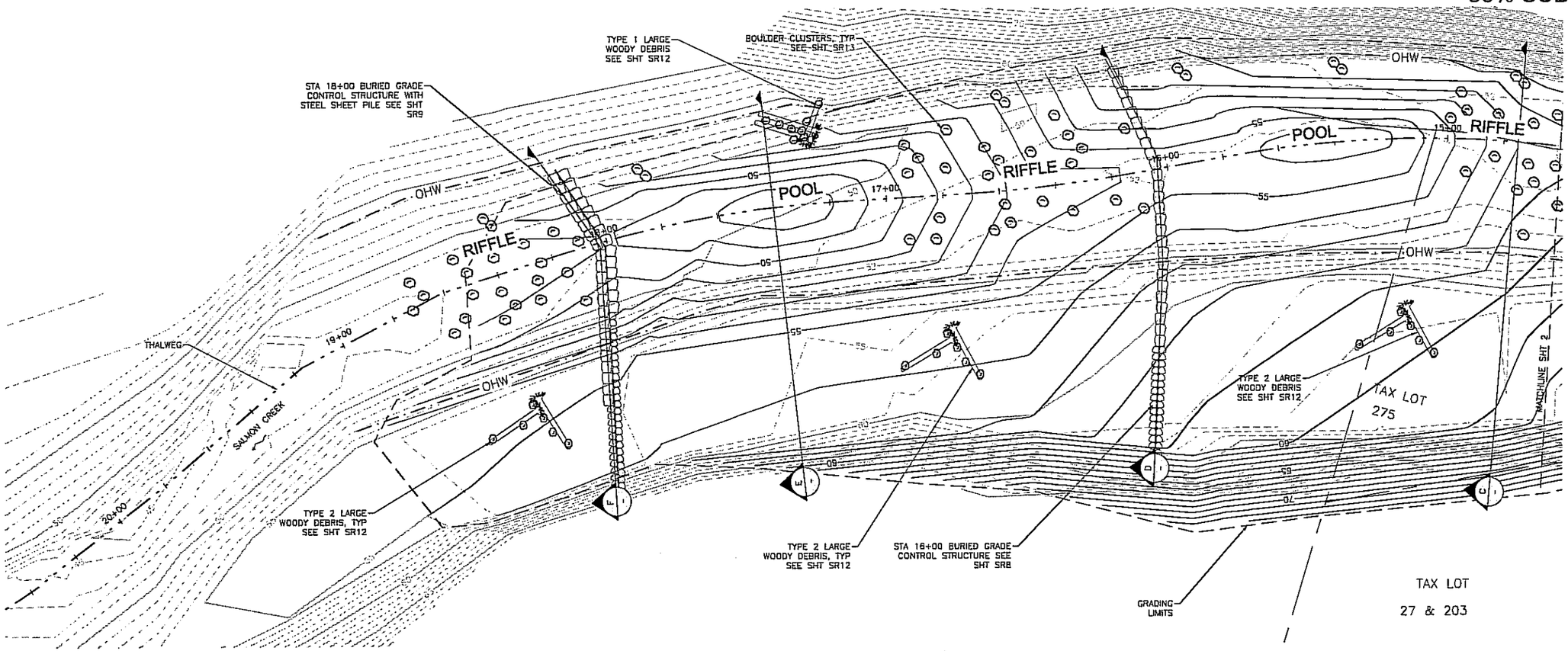

ROUGHENED CHANNEL PLAN - RIVER STA 14+60 TO STA 20+00

SCALE: 1" = 20' (FOR 22X34" SHEETS)

20 0 10 20 40
SCALE FEET

NORTH

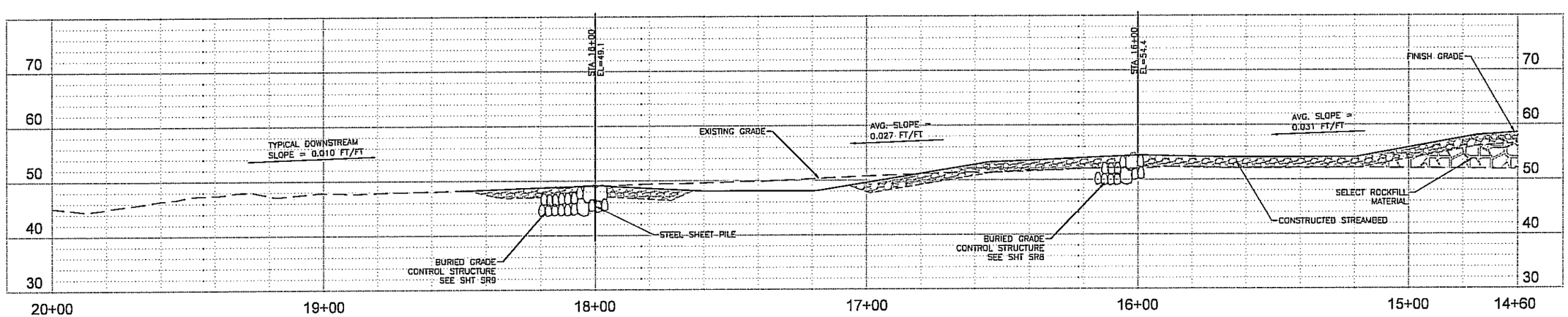

PROFILE AT PROPOSED THALWEG

HORIZONTAL SCALE: 1" = 20' (FOR 22X34" SHEETS)
VERTICAL SCALE: 1" = 10' (FOR 22X34" SHEETS)

DESIGNED	KMV
DRAWN	EES
CRP	
HOR.	SHOWN
VERT.	
DATE	5/26/06
DWG.	SR3
SHEET	x OF x

CALL 48 HOURS BEFORE YOU DIG 1-800-553-4344 "It's the Law" NORTHWEST UTILITY NOTIFICATION CENTER

DESIGN & ENGINEERING DIVISION
DESIGN SECTION

ROUGHENED CHANNEL PLAN AND PROFILE
RIVER STA 14+60 TO STA 20+00

VIGIL AGRIMIS, INC.
Engineering, Landscape Architecture, Environmental Science
819 SE Morrison St., Suite 310
Portland, Oregon
97214
503.274.2010
Fax: 503.274.2024
www.vigil-agrimis.com

CLARK COUNTY WASHINGTON

Path: \\KRAZE001\CAD\Rial Dwg Filename: | TITLE_BLK | KRAZE001_BASE | KRAZE001_SURVEY | KRAZE001_LIFE | KRAZE001_GRADE001 Plot date: May 31, 2006-04:39:56pm CAD User activity: Xref Filename: | KRAZE001_LIFE | KRAZE001_LIFE_SR1 | KRAZE001_LIFE_SR2 | KRAZE001_LIFE_SR3

50% SUBMITTAL

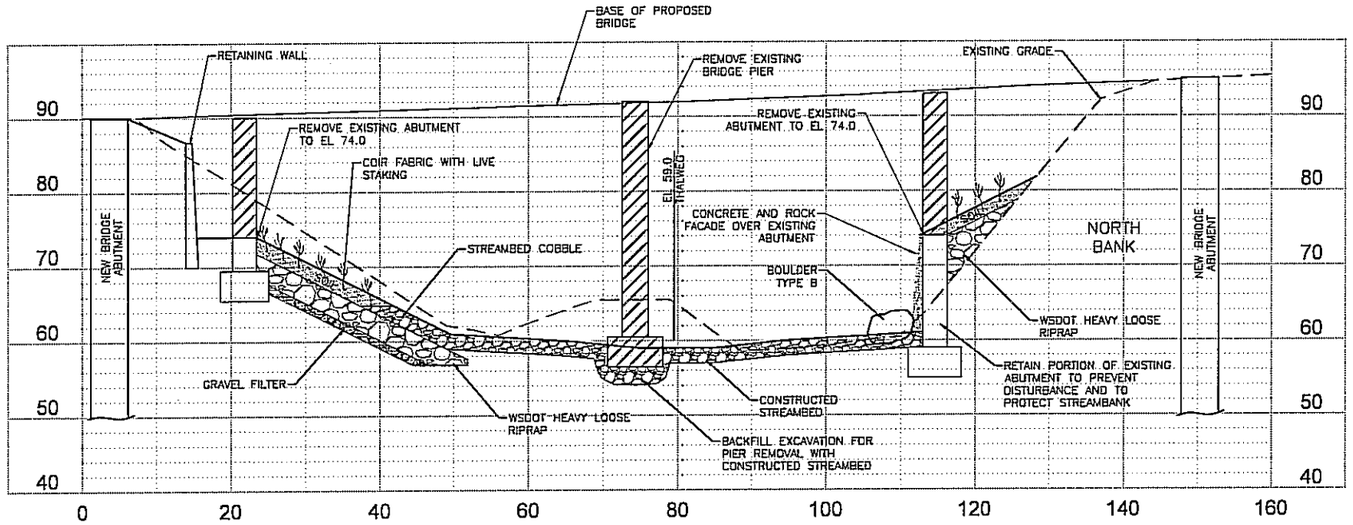

Q / SR2 SECTION - RIVER STA 11+05

HORIZONTAL SCALE: 1"=10'
VERTICAL SCALE: 1"=10'

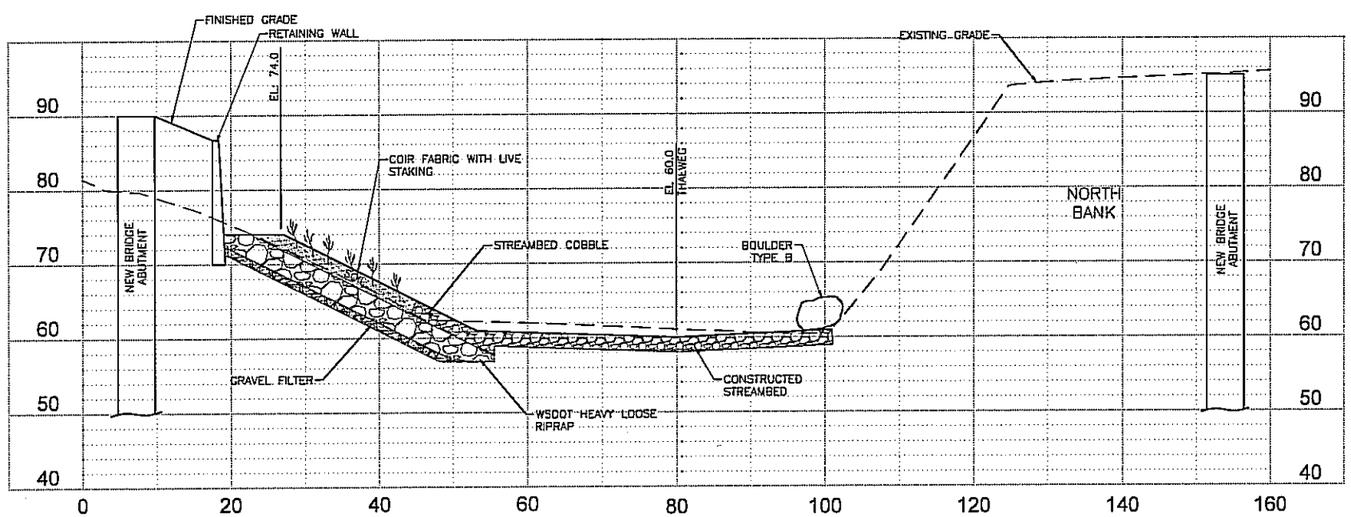

R / SR2 SECTION - RIVER STA 10+71

HORIZONTAL SCALE: 1"=10'
VERTICAL SCALE: 1"=10'

DESIGNED	KMV
DRAWN	ECS
CRP.	
HOR.	SHOWN
VERT.	
DATE	5/26/06
DWG:	SR4
SHEET	X OF X

CALL 48 HOURS BEFORE YOU DIG 1-800-553-4344 "It's the Law" NORTHWEST UTILITY NOTIFICATION CENTER

DESIGN & ENGINEERING DIVISION
DESIGN SECTION

CROSS SECTIONS

VIGIL AGRIMIS, INC.
Engineering, Landscape Architecture, Environmental Science
819 SE Morrison St., Suite 310
Portland, Oregon
97214
503.274.2010
fax: 503.274.2024
www.vigil-agrimis.com

CLARK COUNTY WASHINGTON

Path: \\KRACE01\CAD\Plot Dwg Filename: SR4_SECTION-S_KRACE01 Plot date: Mar 31, 2006-04:49:23pm CAD User: schulz
Xref Filename: TITLE_BLK | KRACE01_BASE | KRACE01_SURVEY | KRACE01_XREFSBM | KRACE01_MCS |

50% SUBMITTAL

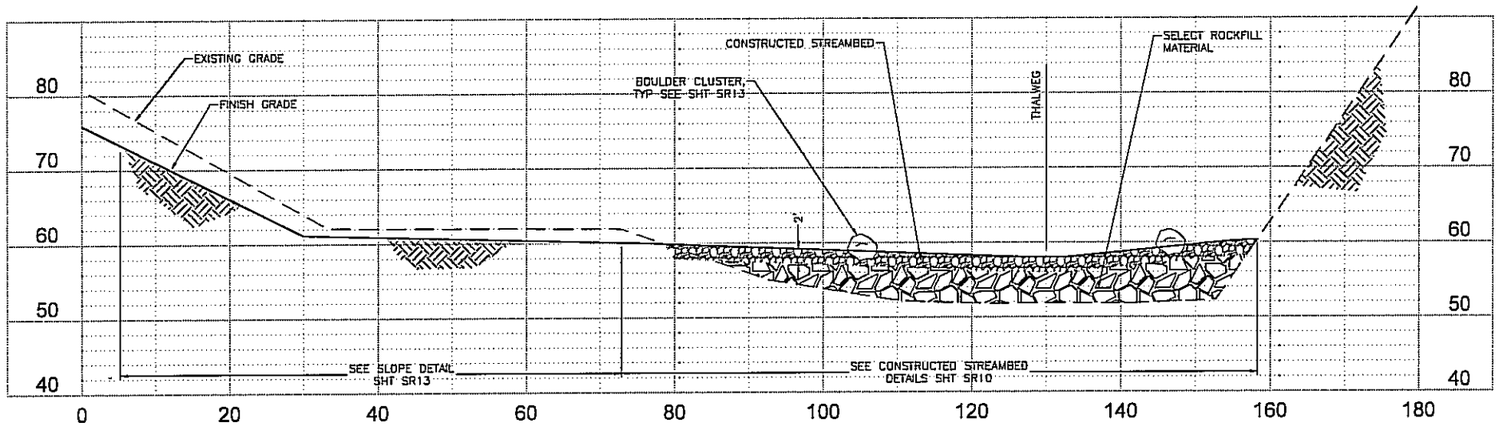

C SECTION - RIVER STA 14+75 - TYPICAL RIFFLE SECTION

SCALE: 1"=10' (FOR 22X34" SHEETS)

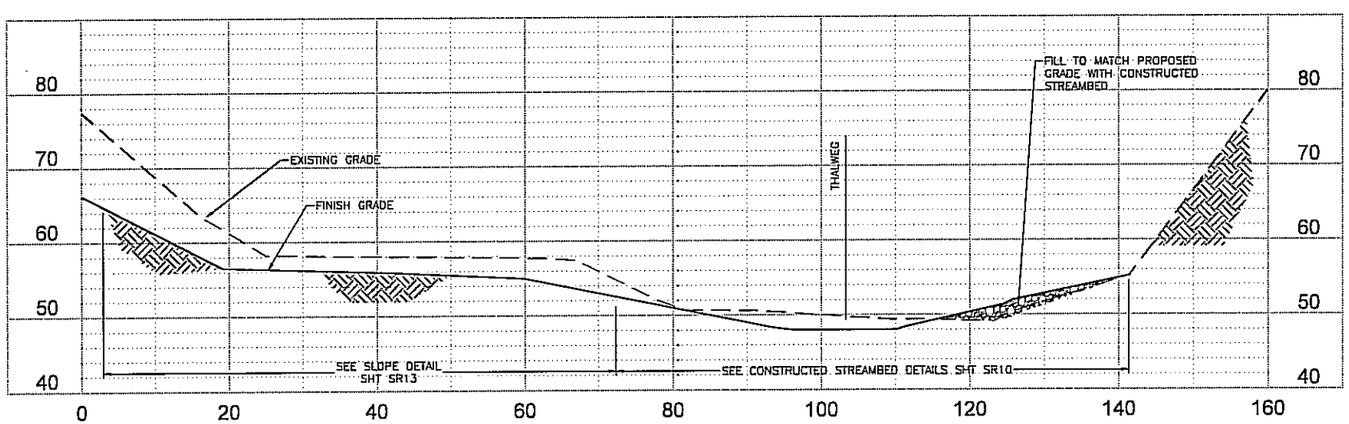

E SECTION - RIVER STA 17+40 - TYPICAL POOL SECTION

SCALE: 1"=10' (FOR 22X34" SHEETS)

DESIGNED KAV
DRAWN EES
CRP
HOR. SHOWN
VERT.
DATE 5/26/06
DWG. SR5
SHEET X OF X

CALL 48 HOURS BEFORE YOU DIG 1-800-553-4344 "It's the Law" NORTHWEST UTILITIES NOTIFICATION CENTER

DESIGN & ENGINEERING DIVISION
DESIGN SECTION

TYPICAL CROSS SECTIONS

VIGIL AGRIMIS, INC.
Engineering, Landscape Architecture, Environmental Science
819 SE Morrison St., Suite 310
Portland, Oregon
97214
503.274.2010
fax 503.274.2024
www.vigil-agrimis.com

CLARK COUNTY WASHINGTON

Path: \KRAGE01\CAD\Plot Dwg Filename: SR5_TYP_SECTIONS_KRAGE01 Plot date: May 31, 2006-04:54:32pm CAD User: exclude.
Xref Filename: TITLE_BLK | KRAGE01_BASE | KRAGE01_SURVEY | KRAGE01_UNIVERSAL | KRAGE01_LEC |

50% SUBMITTAL

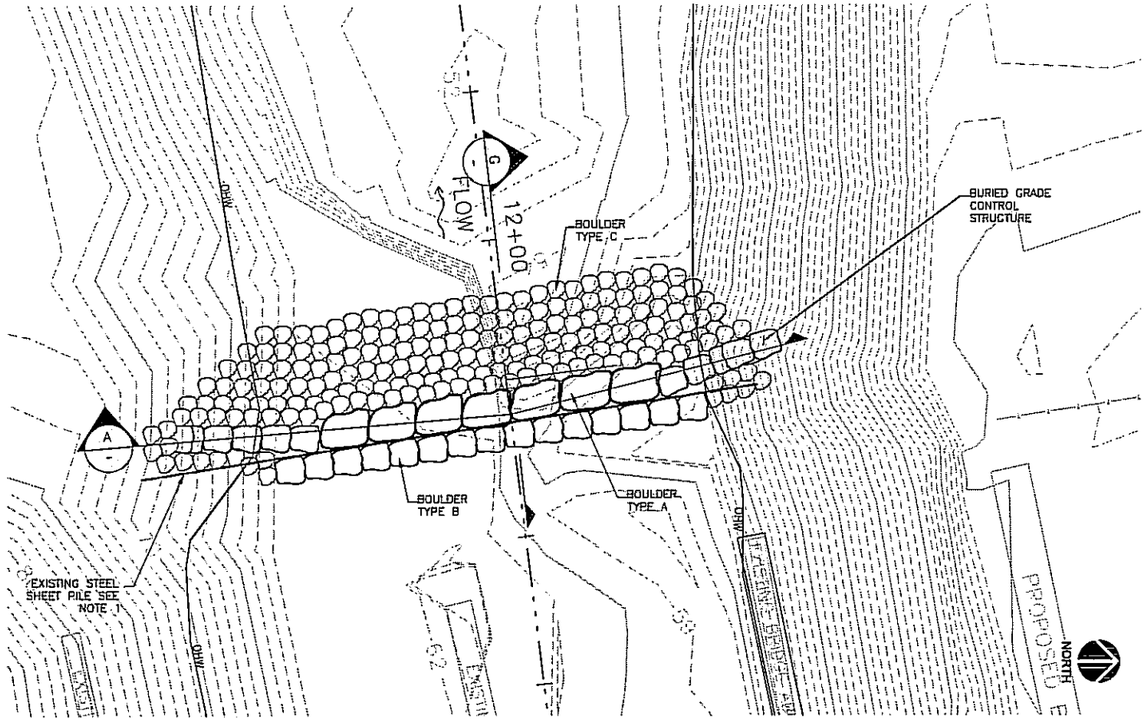

PLAN - GRADE CONTROL STRUCTURE STA 11+75

SCALE: 1" = 10' (FOR 22" X 34" SHEETS)

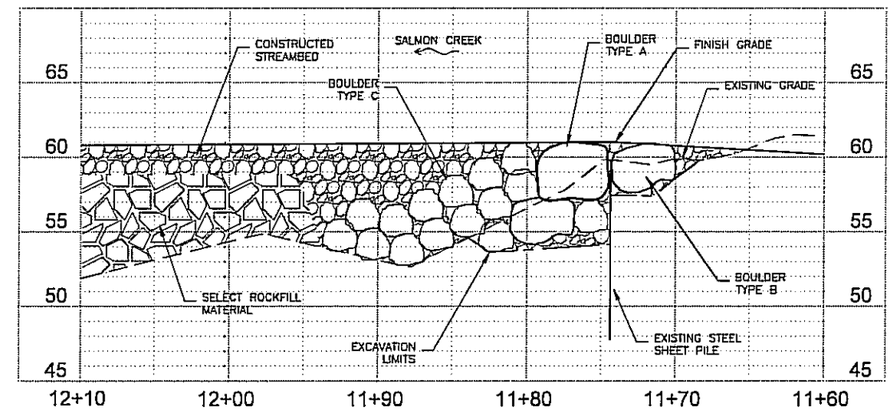

G PROFILE - THALWEG

SCALE: 1" = 5' (FOR 22" X 34" SHEETS)

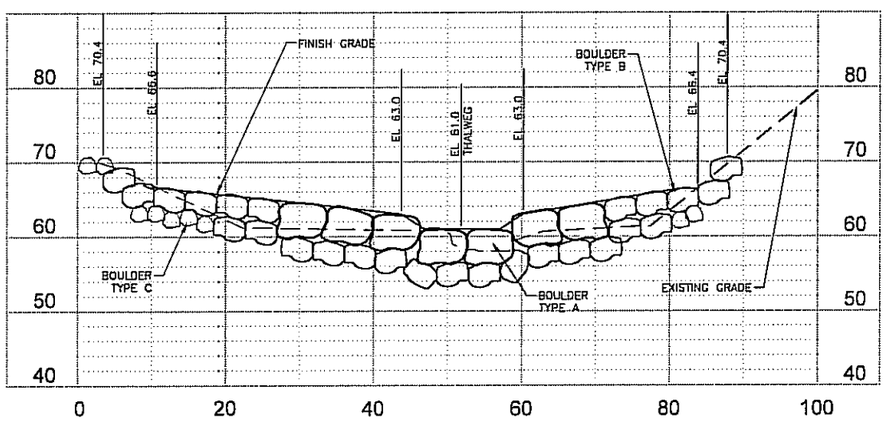

A CROSS SECTION STA 11+75

SCALE: 1" = 10' (FOR 22" X 34" SHEETS)

BOULDER SCHEDULE

LEGEND		MINIMUM WEIGHT (LBS)	MINIMUM * DIAMETER (FT)
	TYPE A BOULDER	24,000	6.5
	TYPE B BOULDER	3,750	3.5
	TYPE C BOULDER	750	2

* MINIMUM DIAMETER MEASURED AT INTERMEDIATE AXIS OF BOULDER
NOTE: BOULDER SIZES SHOWN FOR VIEWS AT 1"=10' SCALE (FOR 22"X34"SHEETS)

NOTES

1. LOCATION AND DEPTH SHOWN FOR EXISTING STEEL SHEET PILE IS APPROXIMATE. CONTRACTOR SHALL REVIEW CONDITION AND LOCATION OF STEEL SHEET WITH ENGINEER AFTER EXCAVATING AND REMOVING UNSUITABLE MATERIAL FROM THE CHANNEL AND PRIOR TO CONSTRUCTION OF THE GRADE CONTROL STRUCTURE.
2. SEE SHEET _____ FOR GRADE CONTROL STRUCTURE ASSEMBLY SEQUENCE.

DESIGNED	KMV
DRAWN	MJP
CRP	
HOR.	SHOWN
VERT.	N/A
DATE	5/26/06
DWG:	SR6
SHEET X	OF X

CALL 48 HOURS BEFORE YOU DIG 1-800-553-4344 "It's the Law" NORTHWEST UTILITIES NOTIFICATION CENTER

DESIGN & ENGINEERING DIVISION
DESIGN SECTION

GRADE CONTROL STRUCTURE
RIVER STA 11+75

VIGIL AGRIMIS, INC.
Engineering, Landscape Architecture, Environmental Science
519 SE Morrison St., Suite 310
Portland, Oregon
97214
503.274.2010
fax: 503.274.2024
www.vigilagrimis.com

CLARK COUNTY WASHINGTON

Path: \\KRAGE001\CAD\Proj Dwg Filename: SR6_CCS_DETAILS_KRAGE001 Plot date: May 31, 2006-05:10:14pm CAD User: eschulz.
Xref Filename: | TITLE_BLK | KRAGE001_DETAILS | KRAGE001_BASE | KRAGE001_SHTREF | KRAGE001_LINEWEIGHT | KRAGE001_LIBE |

50% SUBMITTAL

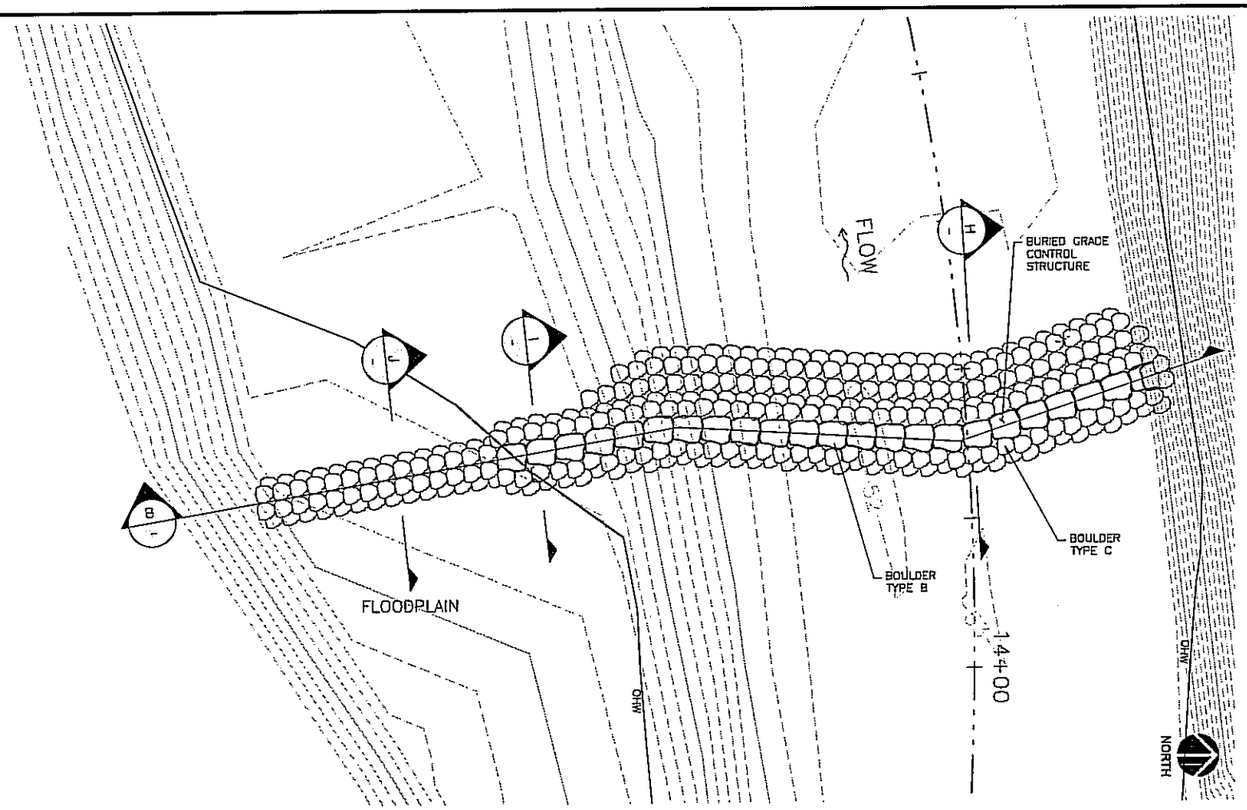

PLAN - BURIED GRADE CONTROL STRUCTURE RIVER STA 14+30

SCALE: 1" = 10' (FOR 22" X 34" SHEETS)

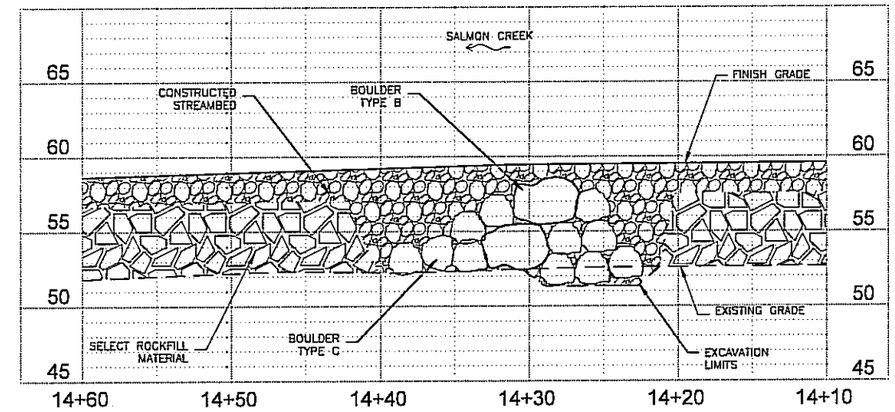

H PROFILE - THALWEG

SCALE: 1" = 5' (FOR 22" X 34" SHEETS)

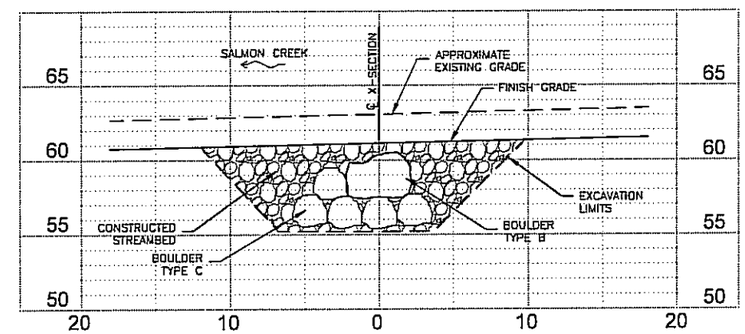

I SECTION - BURIED GCS TRANSITION TO FLOODPLAIN

SCALE: 1" = 5' (FOR 22" X 34" SHEETS)

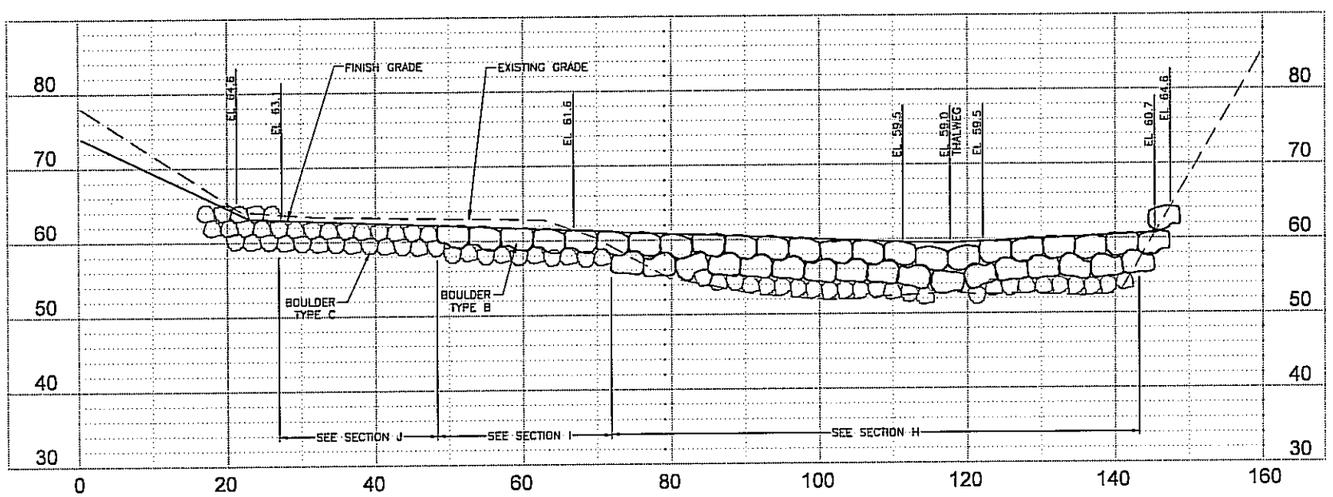

B SECTION - RIVER STA 14+30

SCALE: 1" = 5' (FOR 22" X 34" SHEETS)

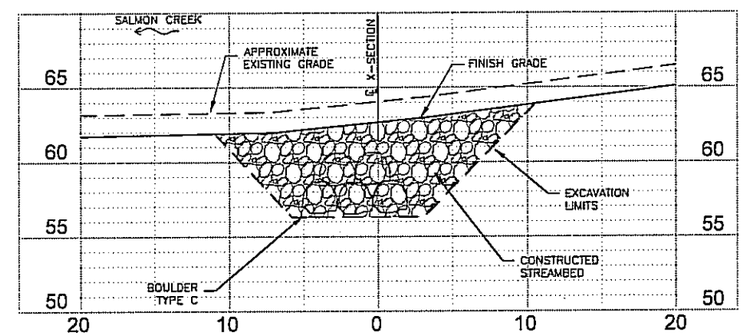

J SECTION - BURIED GCS WITHIN FLOODPLAIN

SCALE: 1" = 5' (FOR 22" X 34" SHEETS)

NOTES

1. SEE SHEET __ FOR GRADE CONTROL STRUCTURE ASSEMBLY SEQUENCE.
2. SEE SHEET SR6 FOR BOULDER SCHEDULE.

DESIGNED	KMV
DRAWN	MJP
CRP	
HOR.	SHOWN
VERT.	N/A
DATE	5/26/06
DWG:	SR7
SHEET	X OF X

CALL 48 HOURS BEFORE YOU DIG 1-800-553-4344 "It's the Law" NORTHWEST NOTIFICATION CENTER

DESIGN & ENGINEERING DIVISION
DESIGN SECTION

GRADE CONTROL STRUCTURE
RIVER STA 14+30

VIGIL AGRIMIS, INC.
Engineering, Landscape Architecture, Environmental Science
810 SE Morrison St., Suite 310
Portland, Oregon
97214
503.274.2010
fax: 503.274.2024
www.vigil-agrimis.com

CLARK COUNTY WASHINGTON

Path: \\KRAGE01\CAD\Plot Dwg Filename: SR7_GCS_DETAILS_KRAGE01 Plot date: May 31, 2006-01:58:09pm CAD User: eschulz.
Xref Filename: | TITLE_BLK | KRAGE01_DETAILS | KRAGE01_BASE | KRAGE01_SURVEY | KRAGE01_LANDSCAPE | KRAGE01_LIFE |

50% SUBMITTAL

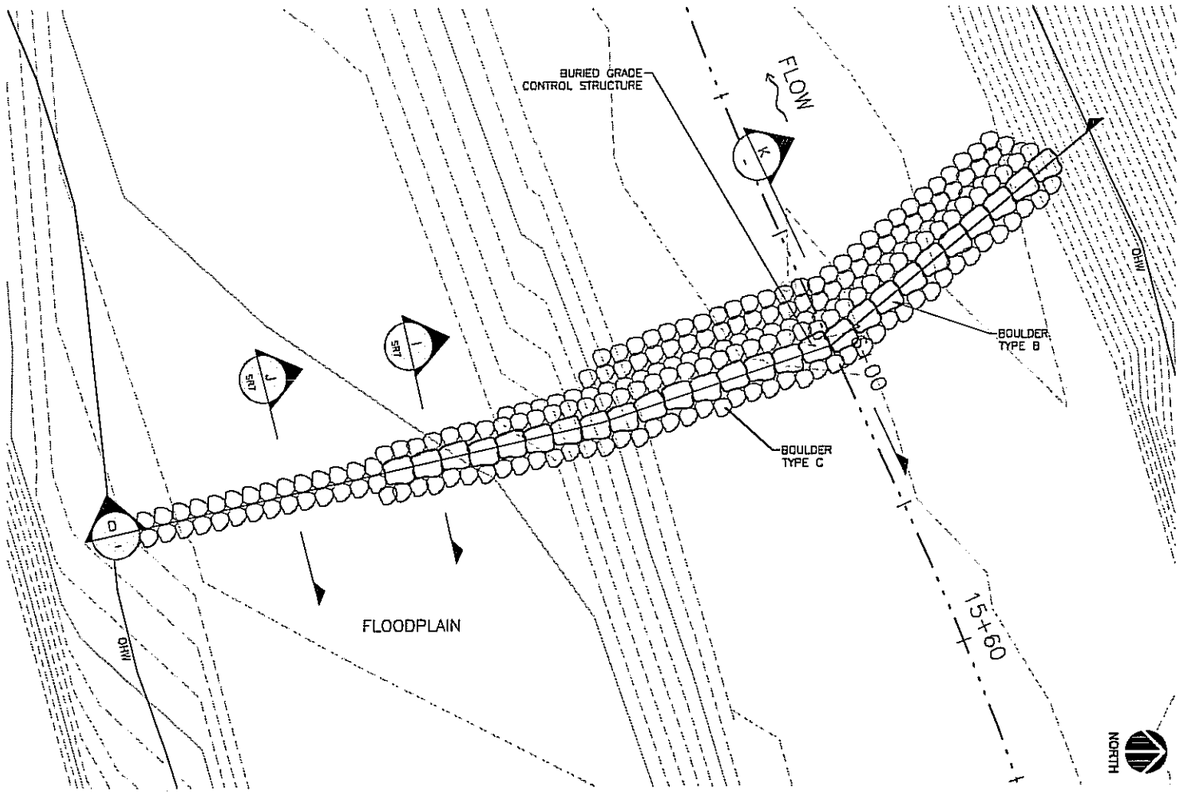

PLAN - BURIED GRADE CONTROL STRUCTURE RIVER STA 16+00

SCALE: 1" = 10' (FOR 22" X 34" SHEETS)

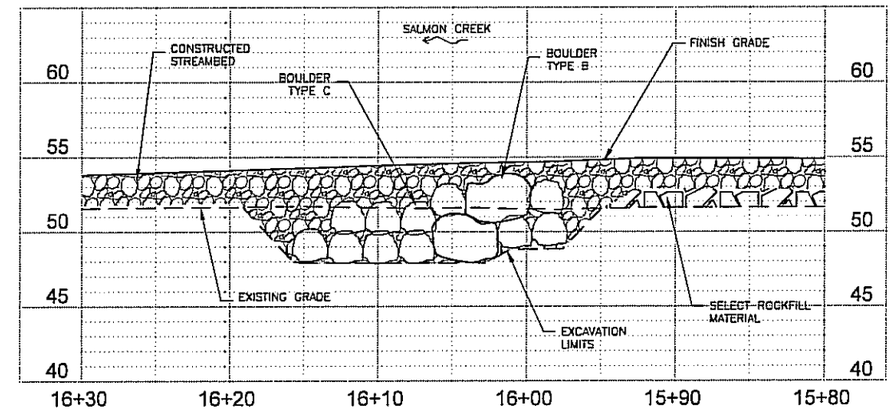

K PROFILE - THALWEG

SCALE: 1" = 5' (FOR 22" X 34" SHEETS)

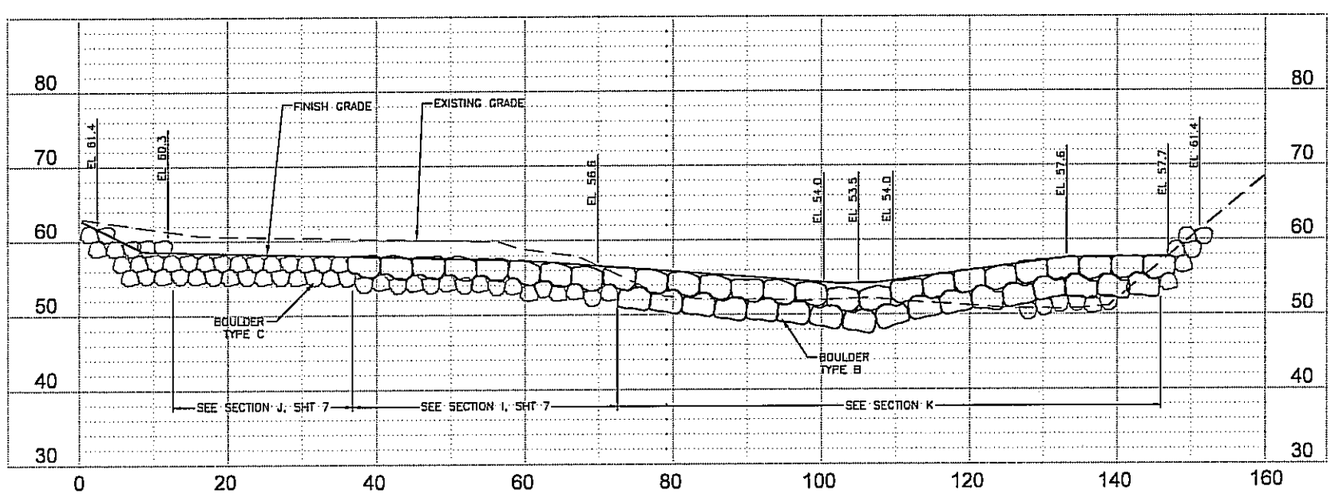

D SECTION - RIVER STA 16+00

SCALE: 1" = 10' (FOR 22" X 34" SHEETS)

NOTES

1. SEE SHEET __ FOR GRADE CONTROL STRUCTURE ASSEMBLY SEQUENCE.
2. SEE SHEET SR6 FOR BOULDER SCHEDULE.

DESIGNED	KMV
DRAWN	KJP
CRP	
HOR.	SHOWN
VERT.	N/A
DATE	5/26/06
DWG:	SRB
SHEET	X OF X

CALL 48 HOURS BEFORE YOU DIG 1-800-553-4344 "It's the Law" NORTHWEST UTILITY NOTIFICATION CENTER

DESIGN & ENGINEERING DIVISION
DESIGN SECTION

GRADE CONTROL STRUCTURE
RIVER STA 16+00

VIGIL AGRIMIS, INC.
Engineering, Landscape Architecture, Environmental Science
819 SE Morrison St., Suite 310
Portland, Oregon
97214
503.274.2010
fax: 503.274.2024
www.vigil-agrimis.com

CLARK COUNTY WASHINGTON

Path: \KRAGE001\SHD\Plot Dwg: Filename: SRB_GCS_DETAILS_KRAGE001 Plot date: May 31, 2006-05:02:55pm CAD User: asphalt.
File Filename: | TITLE_BLK | KRAGE001_DETAILS | KRAGE001_BASE | KRAGE001_SURVEY | KRAGE001_DIVERSION | KRAGE001_REC |

50% SUBMITTAL

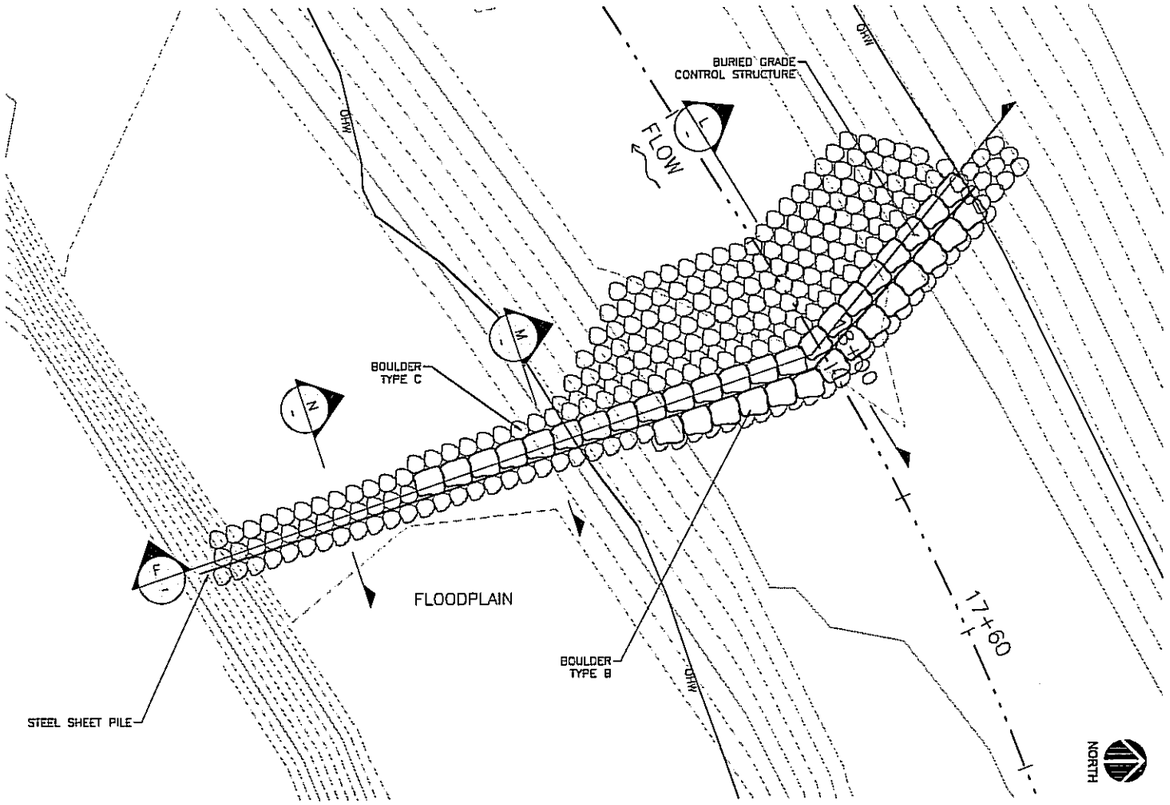

PLAN - BURIED GRADE CONTROL STRUCTURE RIVER STA 18+00

SCALE: 1" = 10' (FOR 22" X 34" SHEETS)

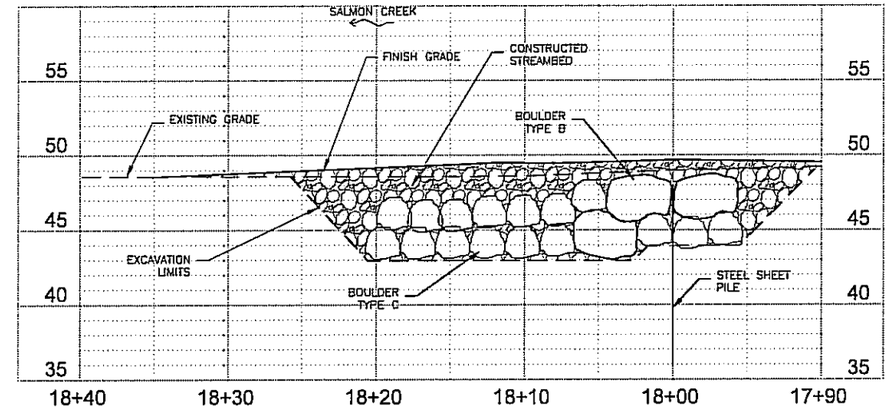

L PROFILE - THALWEG

SCALE: 1" = 5' (FOR 22" X 34" SHEETS)

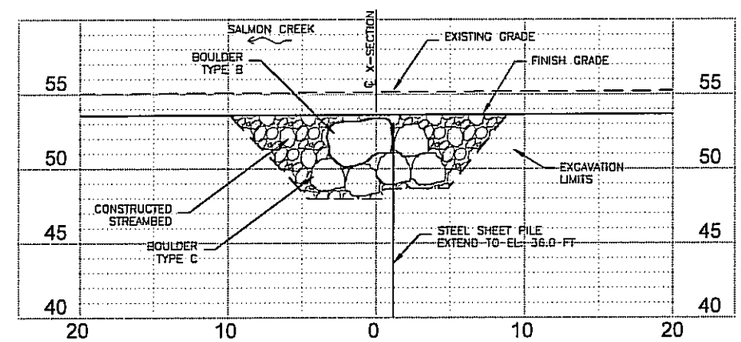

M SECTION - BURIED GCS TRANSITION TO FLOODPLAIN

SCALE: 1" = 5' (FOR 22" X 34" SHEETS)

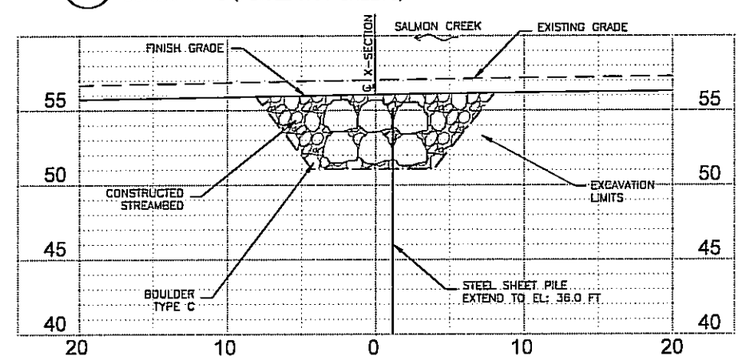

N SECTION - BURIED GCS IN FLOODPLAIN

SCALE: 1" = 5' (FOR 22" X 34" SHEETS)

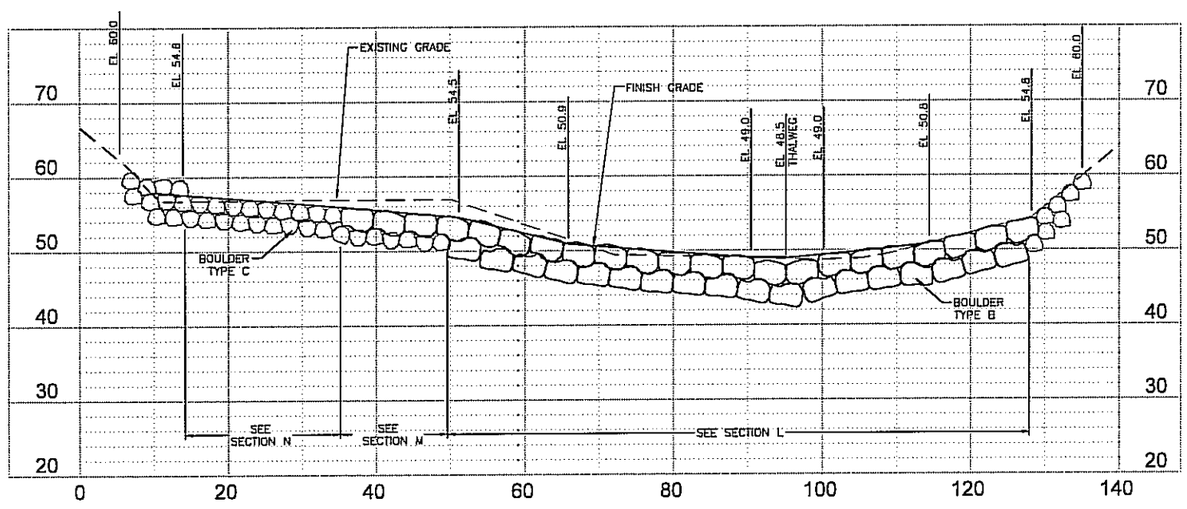

F CROSS SECTION RIVER STA 18+00

SCALE: 1" = 10' (FOR 22" X 34" SHEETS)

NOTES

1. SEE SHEET __ FOR GRADE CONTROL STRUCURE ASSEMBLY SEQUENCE.
2. SEE SHEET SR6 FOR BOULDER SCHEULE.

DESIGNED	KMV
DRAWN	KJP
CRP	
HOR.	SHOWN
VERT.	N/A
DATE	5/26/06
DWG:	SR9
SHEET	X OF X

CALL 48 HOURS BEFORE YOU DIG 1-800-553-4344 "It's the Law" NORTHWEST UTILITY NOTIFICATION CENTER

DESIGN & ENGINEERING DIVISION
DESIGN SECTION

GRADE CONTROL STRUCTURE
RIVER STA 18+00

VIGIL AGRIMIS, INC.
Engineering, Landscape Architecture, Environmental Science
818 SE Morrison St., Suite 310
Portland, Oregon
97214
503.274.2010
fax: 503.274.2024
www.vigil-agrimis.com

CLARK COUNTY WASHINGTON

Path: \\FRAZER\CAD\Plot Dwg Filename: SR9_GRC_DETAILS_KRAZER0 Plot date: Jun 01, 2006 - 10:07:52am CAD User: eschulz
Xref Filename: | TITLE_BLK | KRAZER0_LETAL2 | KRAZER0_BASE | KRAZER0_SHEET | KRAZER0_LAYERSET | KRAZER0_LIFE |

50% SUBMITTAL

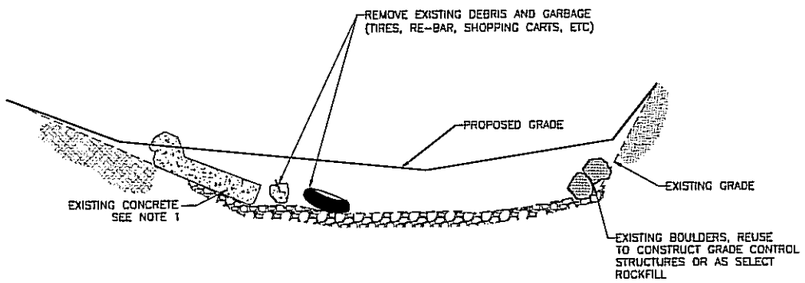

(A) TYPICAL EXISTING CONDITIONS

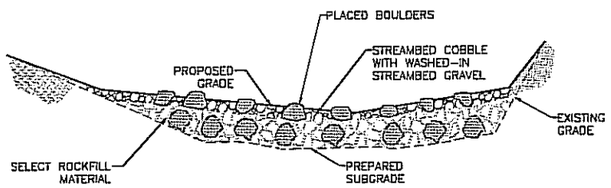

(B) PROPOSED CONDITIONS

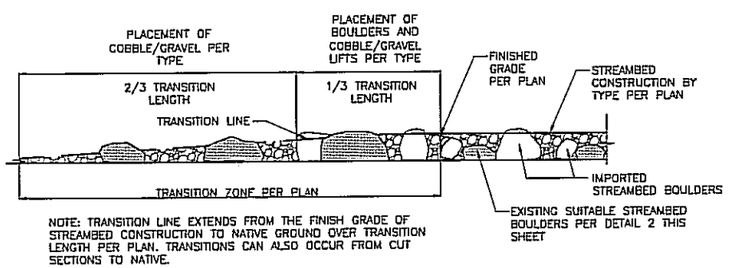

NOTE: TRANSITION LINE EXTENDS FROM THE FINISH GRADE OF STREAMBED CONSTRUCTION TO NATIVE GROUND OVER TRANSITION LENGTH PER PLAN. TRANSITIONS CAN ALSO OCCUR FROM CUT SECTIONS TO NATIVE.

(C) TRANSITION TO NATIVE GRADE ALONG CONSTRUCTED STREAMBED

1 STREAMBED CONSTRUCTION ON PREPARED EXISTING GRADE

NTS

SEQUENCING PLAN

1. INSTALL EROSION CONTROL MEASURES.
2. INSTALL STREAM DIVERSION AND DE-WATER THE STREAM.
3. REMOVE UNSUITABLE STREAMBED MATERIALS FROM CHANNEL AREA. THESE MAY INCLUDE BUT ARE NOT LIMITED TO: CONCRETE, VEGETATION, GARBAGE, WOOD, AND FINE GRAINED SOILS.
4. DISTRIBUTE SUITABLE STREAMBED MATERIALS UNIFORMLY ACROSS CHANNEL SECTION. THESE MAY INCLUDE: GRAVEL, COBBLE, AND BOULDERS.
5. CONSTRUCT STREAMBED ON TOP OF PREPARED EXISTING GRADE TO THE DEPTH INDICATED ON THE PLANS AND IN THE MANNER DESCRIBED IN THE SPECIFICATIONS.
6. INSTALL COIR FABRIC AND SEED.

STREAMBED MATERIAL TYPE	TYPICAL DEPTH (FT)	BOULDER (INCH)	COBBLE (INCH)	GRAVEL (INCH)
TYPE 1	2	24	4-12	.03 - 2.5

NOTE: REFER TO SPECIFICATIONS FOR DETAILS

2 TABLE OF CONSTRUCTED STREAMBED MATERIAL TYPES

NOTE:

1. SOME EXISTING CONCRETE WITHIN THE PROJECT SITE MAY BE RECYCLED AND USED AS SELECT ROCKFILL MATERIAL, FOLLOWING APPROVAL BY THE OWNER'S REPRESENTATIVE. PRIOR TO PLACEMENT, CONCRETE SHALL BE BROKEN INTO PIECES SMALLER THAN 2FT DIAMETER AND ALL STEEL REINFORCING SHALL BE CUT/TRIMED AND DISPOSED OF IN AN APPROVED OFF SITE DISPOSAL AREA. RECYCLED CONCRETE TO BE USED FOR SELECT ROCKFILL ONLY AND COVERED ENTIRELY WITH CONSTRUCTED STREAMBED.

DESIGNED	KMV
DRAWN	EES
CRP	
HOR.	SHOWN
VERT.	N/A
DATE	5/26/06
DWG.	SR10
SHEET	X OF X

CALL 48 HOURS BEFORE YOU DIG 1-800-553-4344 "It's the Law" NORTHWEST UTILITY NOTIFICATION CENTER

DESIGN & ENGINEERING DIVISION
DESIGN SECTION

CONSTRUCTED STREAMBED DETAILS

VIGIL AGRIMIS, INC.
Engineering Landscape Architecture Environmental Science
919 SE Morrison St., Suite 310
Portland, Oregon
97214
503.274.2010
fax: 503.274.2024
www.vigil-agrimis.com

CLARK COUNTY WASHINGTON

Path: \\KRAZE001\CAD\Plot Dwg Filename: SR10_CONST_STREAMBED_KRAZE001 Plot date: Jun 01, 2006-10:11:20am CAD User: estelle
Xref Filename: | TITLE_BLK | KRAZE001_DETAILS | KRAZE001_BASE | KRAZE001_SURVEY | KRAZE001_SITE | KRAZE001_GPS_3_71_95 | KRAZE001_DIVERSION |

50% SUBMITTAL

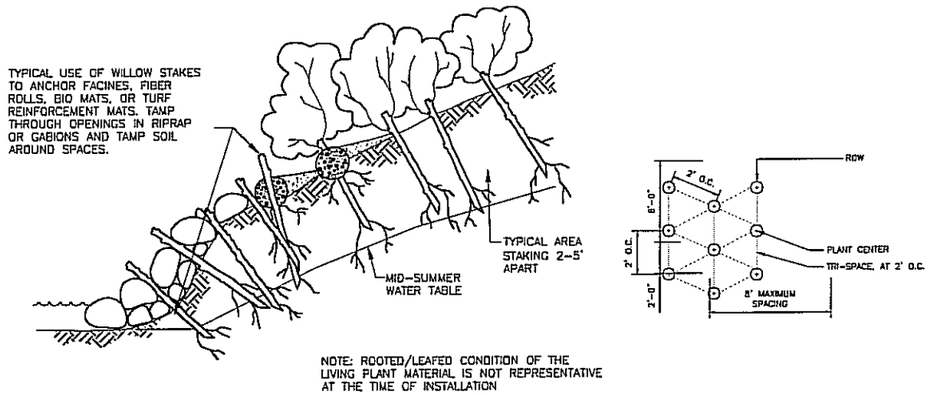

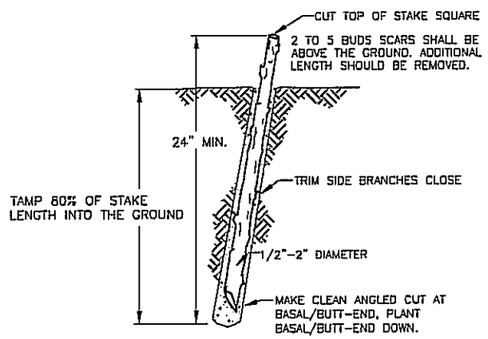

1 LIVE STAKES

NTS

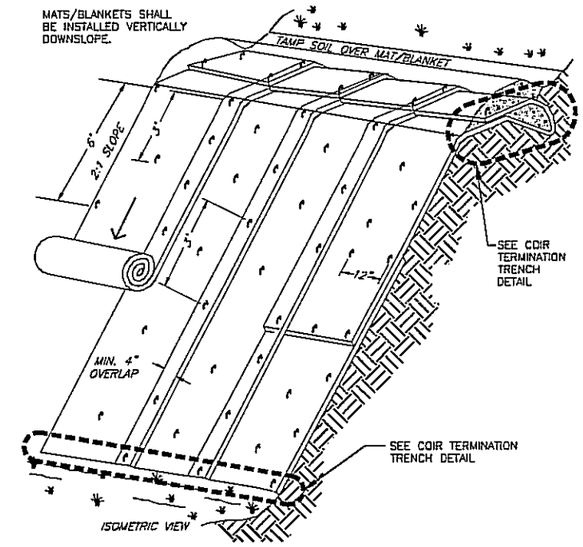

3 TYPICAL COIR FABRIC - SLOPE

NTS

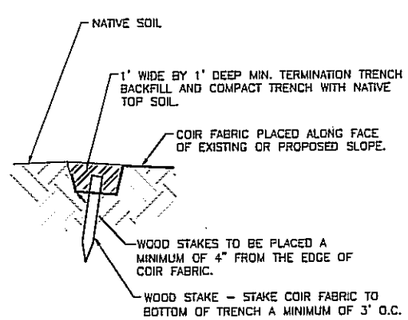

2 COIR TERMINATION TRENCH

NTS

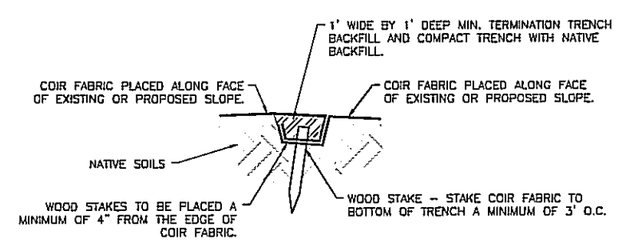

4 COIR TRANSITION TRENCH

NTS

DESIGNED	KMV
DRAWN	EES
CRP	
HOR.	SHOWN
VERT.	N/A
DATE	5/26/06
DWG.	SR11
SHEET	X OF X

CALL 48 HOURS BEFORE YOU DIG 1-800-553-4344 "It's the Law" NORTHWEST UTILITIES NOTIFICATION CENTER

DESIGN & ENGINEERING DIVISION
DESIGN SECTION

BANK TREATMENT DETAILS

VIGIL AGRIMIS, INC.
Engineering, Landscape Architecture, Environmental Science
815 SE Morrison St., Suite 310
Portland, Oregon
97214
503.274.2010
fax: 503.274.2024
www.vigil-agrimis.com

CLARK COUNTY WASHINGTON

Path: \\KRAGE001\CAD\Plot Dwg | Filename: SR11_BANK_STBL_KRAGE001 | Plot date: Jun 01, 2006 - 10:38:58am | CAD User: eschulz.
Plot Parameters: | TITLE_BLK | KRAGE01_SR11A3 | KRAGE01_BASE | KRAGE01_LAYER | KRAGE01_DIVISION | KRAGE01_LTE2 |

50% SUBMITTAL

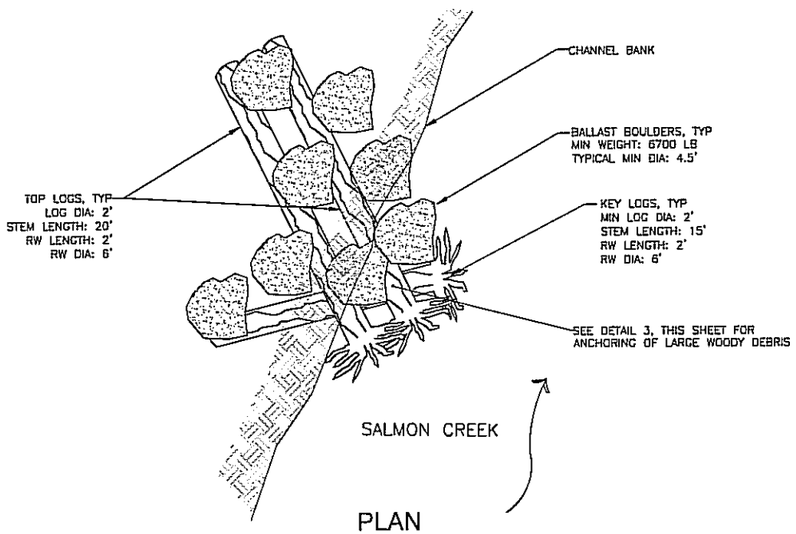

PLAN

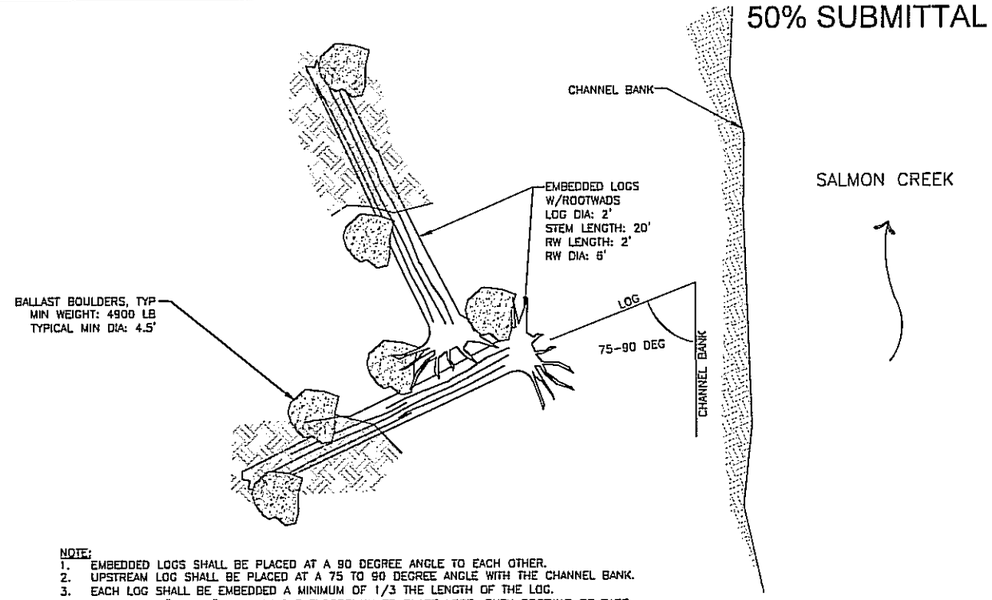

NOTE:
1. EMBEDDED LOGS SHALL BE PLACED AT A 90 DEGREE ANGLE TO EACH OTHER.
2. UPSTREAM LOG SHALL BE PLACED AT A 75 TO 90 DEGREE ANGLE WITH THE CHANNEL BANK.
3. EACH LOG SHALL BE EMBEDDED A MINIMUM OF 1/3 THE LENGTH OF THE LOG.
4. EXCAVATE A "CRADLE" AREA ON THE FLOODPLAIN TO PLACE LOGS. BURY ROOTWAD OF BASE MEMBERS 1/2 THE FAN DIAMETER INTO THE STREAMBED.

PLAN

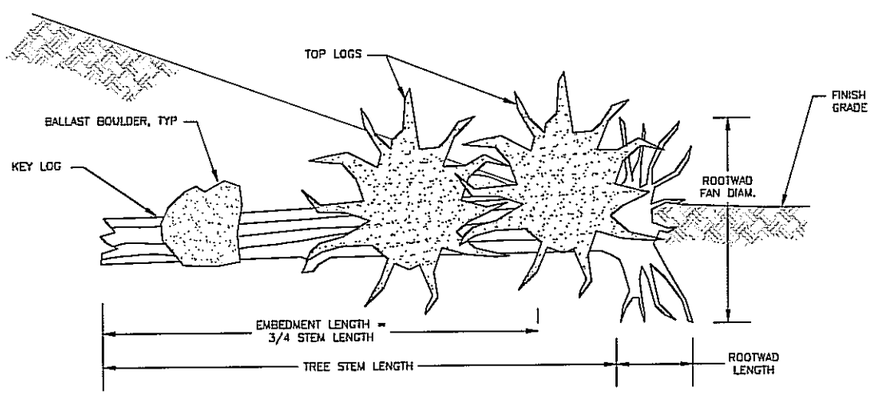

NOTES:
1. BURY 3/4 OF EACH LOG INTO BANK.
2. EXCAVATE A "CRADLE" AREA ON THE STREAMBED TO PLACE BASE MEMBERS. BURY ROOTWAD OF BASE MEMBERS 1/2 THE FAN DIAMETER INTO THE STREAMBED.
3. EACH LOG SHALL BE BALLASTED WITH AT LEAST TWO BOULDERS.

ELEVATION

1 TYPE 1 LARGE WOODY DEBRIS

NTS

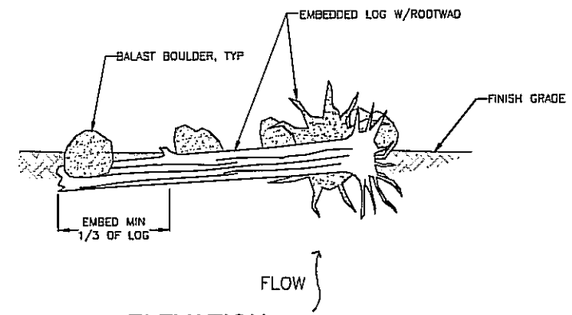

ELEVATION

2 TYPE 2 LARGE WOODY DEBRIS

NTS

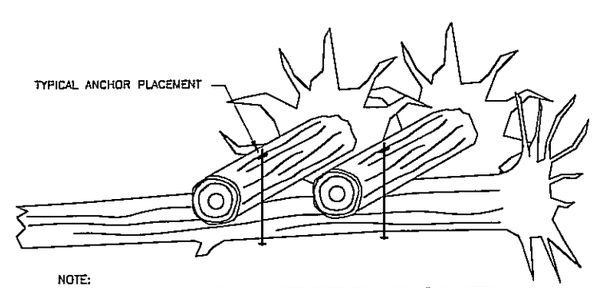

NOTE:
1. USE A307 HOT DIPPED GALVANIZED THREADED ROD, 1" DIAMETER, WITH HEAVY PLATE WASHERS AND NUTS, PRE-DRILL HOLE FOR THREADED ROD. DOUBLENUT THREADED ROD AND TRIM TO LESS THAN 1" FROM TOP NUT.

3 LARGE WOODY DEBRIS ANCHOR PLACEMENT

NTS

DESIGNED	KMV
DRAWN	MJP
CRP	
HOR.	SHOWN
VERT.	N/A
DATE	5/26/06
DWG:	SR12
SHEET	X OF X

CALL 48 HOURS BEFORE YOU DIG 1-800-553-4344 "It's the Law" NORTHWEST NOTIFICATION CENTER

DESIGN & ENGINEERING DIVISION
DESIGN SECTION

STREAM HABITAT ENHANCEMENT DETAILS

VIGIL AGRIMIS, INC.
Engineering, Landscape Architecture, Environmental Science
819 SE Morrison St., Suite 310
Portland, Oregon
97214
503.274.2010
fax: 503.274.2024
www.vigil-agrimis.com

CLARK COUNTY WASHINGTON

Plotted: \KRAGE01\CAD\Plot Dwg Filename: SR12_ST_HAB_DETAILS_KRAGE01 Plot date: Jun 01, 2006-10:43:43am CAD User: eschulz.
Xref Filename: | TITLE_BLK | KRAGE01_SURVEY | KRAGE01_DETAILS | KRAGE01_BASE | KRAGE01_INVERSON | KRAGE01_HEC |

50% SUBMITTAL

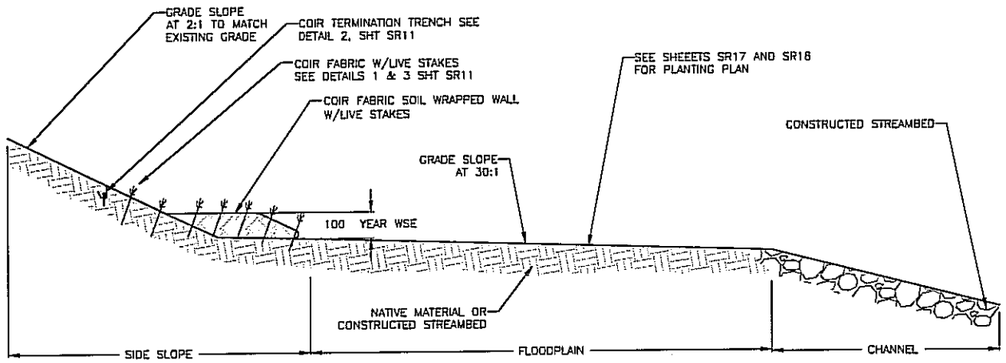

FLOODPLAIN

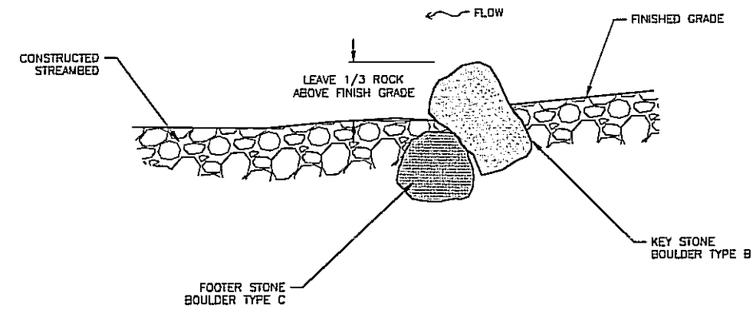

2 ELEVATION - TYPICAL BOULDER CLUSTER ROCK PLACEMENT
SCALE: NTS

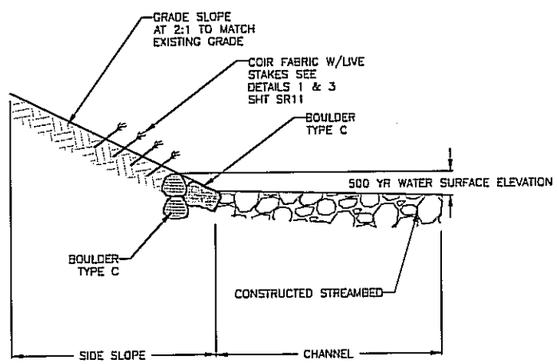

DOWNSTREAM OF BRIDGE SIDE SLOPE

1 TYPICAL CHANNEL SIDESLOPE DETAILS
SCALE: NTS

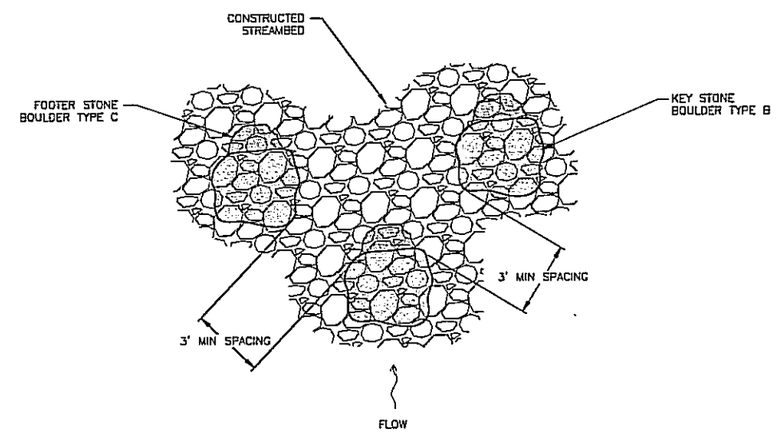

NOTES:

1. BOULDER CLUSTERS SHALL BE RANDOMLY PLACED IN THE FOLLOWING ARANGEMENT AT A DISTANCE OF 10FT TO 12FT APART.
2. NO MORE THAN 5 BOULDERS MAY BE PLACED IN ONE CROSS SECTION OF THE CHANNEL.

3 PLAN - TYPICAL BOULDER CLUSTER ROCK PLACEMENT
SCALE: NTS

NOTES

1. SEE SHEET SR6 FOR BOULDER SCHEDULE

DESIGNED	KMV
DRAWN	MJP
CRP	
HOR.	SHOWN
VERT.	N/A
DATE	5/26/06
DWG:	SR13
SHEET	X OF X

CALL 48 HOURS BEFORE YOU DIG 1-800-553-4344 "It's the Law" NORTHWEST UTILITY NOTIFICATION CENTER

DESIGN & ENGINEERING DIVISION
DESIGN SECTION

STREAMBED DETAILS

VIGIL AGRIMIS, INC.
Engineering Landscape Architecture Environmental Science
819 SE Morrison St., Suite 310
Portland, Oregon
97214
503.274.2010
fax: 503.274.2024
www.vigil-agrimis.com

CLARK COUNTY WASHINGTON

Path: \\KRAGE001\CAD\Plot Dwg Filename: SR13_STRMBD_DETAILS_KRAGE001 Plot date: Jun 01, 2006-10:47:04am CAD User: pschulz
Xref Filename: | TITLE_BLK | KRAGE001_DETAILS | KRAGE001_BASE | KRAGE001_SURVEY | KRAGE001_DIVERSION | KRAGE001_LINE |

50% SUBMITTAL

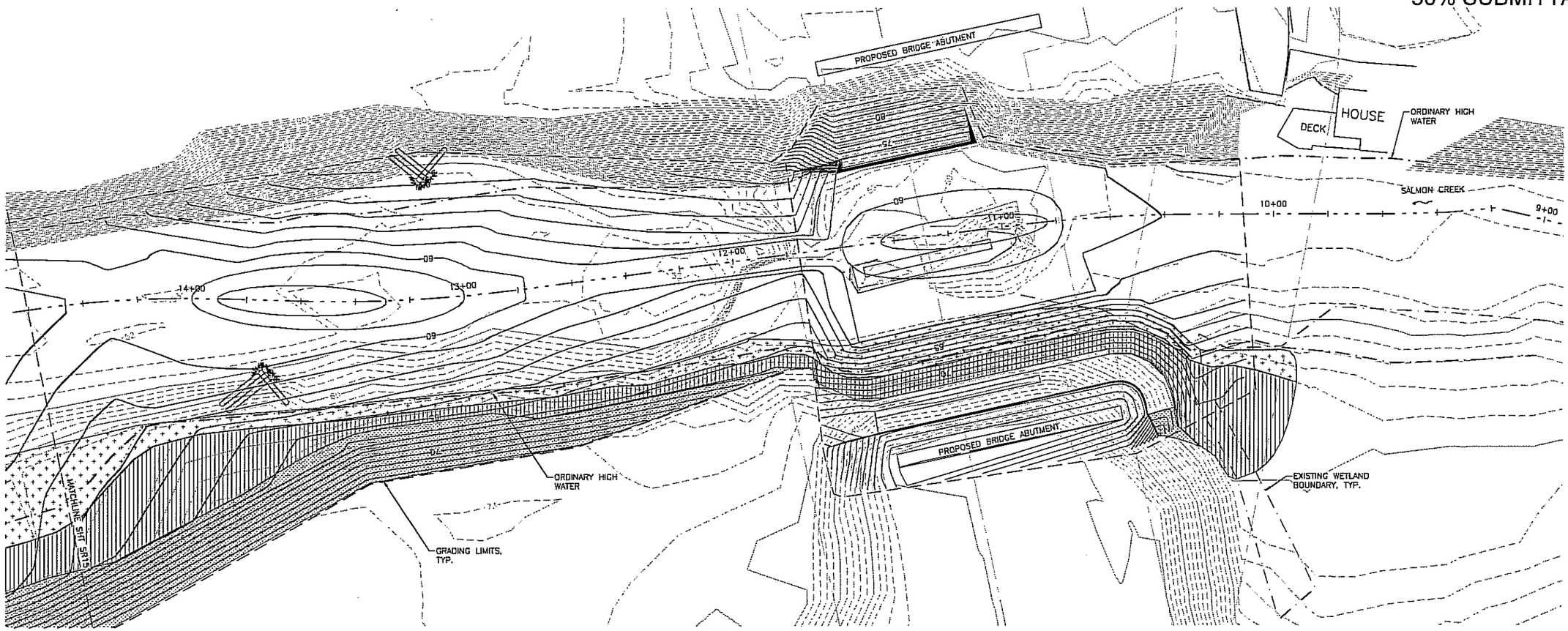

PLANTING PLAN

SCALE: 1" = 20' (FOR 22X34" SHEETS)

20 0 10 20 40
SCALE FEET

NORTH

PLANTING LEGEND

UPLAND

TRANSITIONAL

RIPARIAN

NOTES

1. SEE SHEET SR16 FOR SPECIES COMPOSITION AND QUANTITIES.
2. SEE SHEET SR17 FOR PLANTING DETAILS AND NOTES

DESIGNED	RCR
DRAWN	RCR
CRP	
HOR.	SHOWN
VERT.	N/A
DATE	5/26/06
DWG:	SR14
SHEET	X OF X

CALL 48 HOURS BEFORE YOU DIG 1-800-553-4344 "It's the Law" NORTHWEST UTILITIES NOTIFICATION CENTER

DESIGN & ENGINEERING DIVISION
DESIGN SECTION

PLANTING PLAN

VIGIL AGRIMIS, INC.
Engineering, Landscape Architecture, Environmental Science
819 SE Morrison St., Suite 310
Portland, Oregon
97214
503.274.2010
fax: 503.274.2024
www.vigil-agrimis.com

CLARK COUNTY WASHINGTON

Path: \\KRAGE001\CAD\Plat Dwg Filename: SR14-17_PLANTING_PLAN_KRAGE001 Plot date: Jun 01, 2006 - 10:50:59am CAD User: eschulz.
Xref Filename: | TITLE_BLK | KRAGE001_BASE | KRAGE001_SITREC | KRAGE001_DIVISION | KRAGE001_LTE |

50% SUBMITTAL

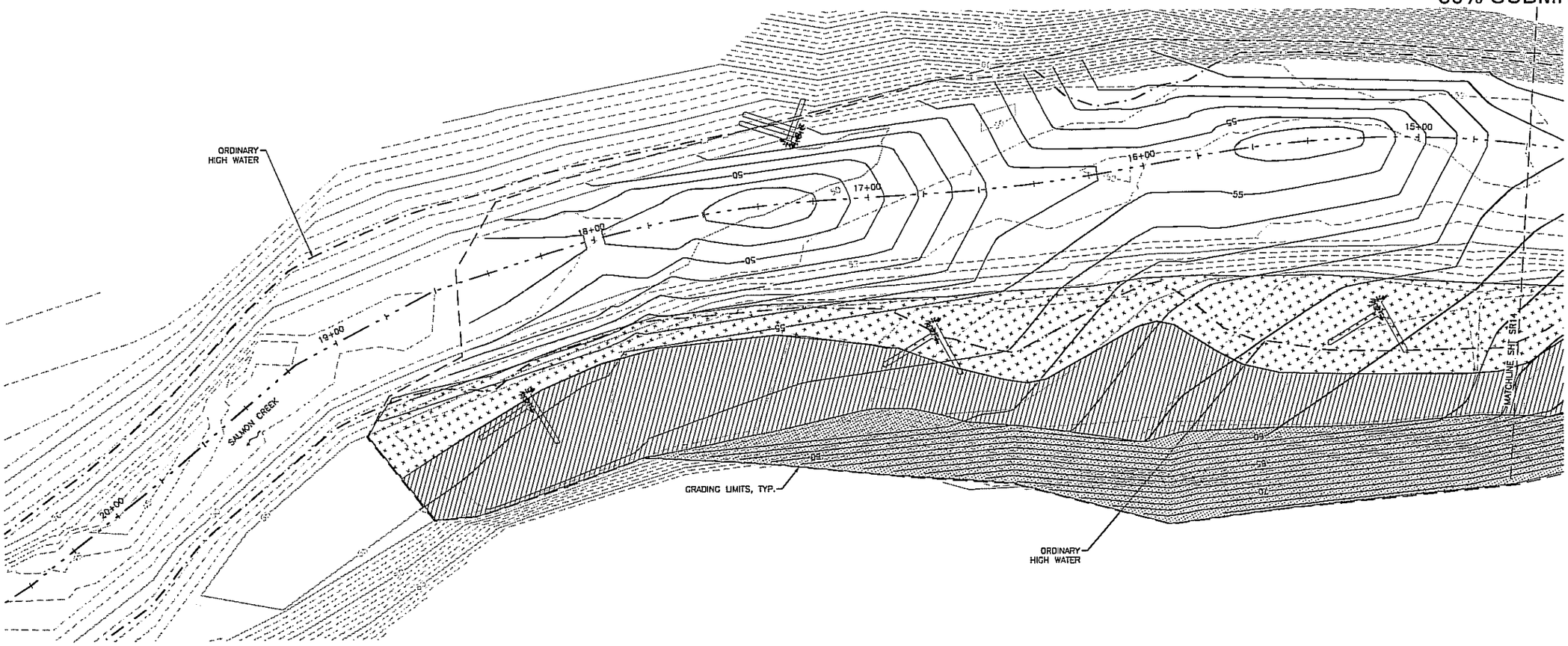

PLANTING PLAN

SCALE: 1" = 20' (FOR 22X34" SHEETS)

20 0 10 20 40
SCALE FEET

NORTH

PLANTING LEGEND

- UPLAND
- TRANSITIONAL
- RIPARIAN

NOTES

1. SEE SHEET SR16 FOR SPECIES COMPOSITION AND QUANTITIES.
2. SEE SHEET SR17 FOR PLANTING DETAILS AND NOTES

DESIGNED	RCR
DRAWN	RCR
CRP	
HOR.	SHOWN
VERT.	N/A
DATE	5/26/05
DWG:	SR15
SHEET	X OF X

CALL 48 HOURS BEFORE YOU DIG 1-800-553-4344 "It's the Law" NORTHWEST UTILITY NOTIFICATION CENTER

DESIGN & ENGINEERING DIVISION
DESIGN SECTION

PLANTING PLAN

VIGIL AGRIMS, INC.
Engineering, Landscape Architecture, Environmental Science
810 SE Morrison St., Suite 310
Portland, Oregon
97214
503.274.2010
fax: 503.274.2024
www.vigil-agrims.com

CLARK COUNTY WASHINGTON

Path: \\KRAZE01\CAD\Plat 0-9 Filename: SR14-17_PLANTING_PLAN_KRAZE01 Plot date: Jun 01, 2006-11:00:30am CAD User: eschulz.
Xref Filename: | TITLE_BLK | KRAZE01_BASE | KRAZE01_SURVEY | KRAZE01_INVERSION | KRAZE01_VEC |

50% SUBMITTAL

PLANTING LEGEND

UPLAND – 11,139 SF/.26 ACRES

WOODY PLANT MIX

ABBR.	QTY.	SYMBOL	BOTANICAL /COMMON NAME	SIZE	CONDITION
ACMA	28		Acer macrophyllum / big-leaf maple	3 GAL.	CONTAINER
POTR	4		Populus balsamifera ssp. trichocarpa / black cottonwood	3 GAL.	CONTAINER
PSME	11		Pseudotsuga menziesii / Douglas fir	3 GAL.	CONTAINER
THPL	28		Thuja plicata / Western red cedar	3 GAL.	CONTAINER
AMAL	47		Amelanchier alnifolia / western serviceberry	2 GAL.	CONTAINER
ACCI	28		Acer circinatum / vine maple	3 GAL.	CONTAINER
COCO	9		Corylus cornuta / beaked hazelnut	2 GAL.	CONTAINER
HODI	19		Holodiscus discolor / oceanspray	2 GAL.	CONTAINER
MAAQ	13		Mahonia aquifolium / Oregon grape	2 GAL.	CONTAINER
OECE	9		Oemleria cerasiformis / osoberry\	2 GAL.	CONTAINER
POMU	19		Polystichum munitum / sword fern	1 GAL.	CONTAINER
SARA	9		Sambucus racemosa / red elderberry	2 GAL.	CONTAINER
SYAL	38		Symphoricarpos albus / snowberry	1 GAL.	CONTAINER

SEED MIX

ABBR.			BOTANICAL /COMMON NAME	
BRVU			Bromus vulgaris / Columbia brome	See specifications for details on seed mix.
FEOC			Festuca occidentalis / Western fescue	
ELGL			Elymus glaucus / blue wild rye	
GLOC			Glyceria occidentalis / western mannagrass	
TEGR			Tellima grandiflora / fringe-cup	

TRANSITIONAL – 16,265 SF/.37 ACRES

WOODY PLANT MIX

ABBR.	QTY.	SYMBOL	BOTANICAL /COMMON NAME	SIZE	CONDITION
ALRU	47		Alnus rubra / red alder	3 GAL.	CONTAINER
POTR	10		Populus balsamifera ssp. trichocarpa / black cottonwood	3 GAL.	CONTAINER
RHPU	36		Rhamnus purshiana / cascara	3 GAL.	CONTAINER
THPL	10		Thuja plicata / Western red cedar	3 GAL.	CONTAINER
ACCI	14		Acer circinatum / vine maple	3 GAL.	CONTAINER
AMAL	68		Amelanchier alnifolia / western serviceberry	2 GAL.	CONTAINER
COSE	109		Cornus sericea / red-osier dogwood	2 GAL.	CONTAINER
POMU	41		Polystichum munitum / sword fern	1 GAL.	CONTAINER
RUSP	14		Rubus spectabilis / salmonberry	2 GAL.	CONTAINER
SARA	14		Sambucus racemosa / red elderberry	2 GAL.	CONTAINER
SYAL	14		Symphoricarpos albus / snowberry	1 GAL.	CONTAINER

SEED MIX

ABBR.			BOTANICAL /COMMON NAME	
BRVU			Bromus vulgaris / Columbia brome	See specifications for details on seed mix.
CAHE			Carex hendersonii / Henderson sedge	
ELGL			Elymus glaucus / blue wild rye	
GLOC			Glyceria occidentalis / western mannagrass	
TEGR			Tellima grandiflora / fringe cup	

RIPARIAN – 12,979 SF/.30 ACRES

WOODY PLANT MIX

ABBR.	QTY.	SYMBOL	BOTANICAL /COMMON NAME	SIZE	CONDITION
ALRU	20		Alnus rubra / red alder	3 GAL.	CONTAINER
FRLA	22		Fraxinus latifolia / Oregon ash	3 GAL.	CONTAINER
POTR	20		Populus balsamifera ssp. trichocarpa / black cottonwood	3 GAL.	CONTAINER
RHPU	21		Rhamnus purshiana / cascara	3 GAL.	CONTAINER
ATFI	11		Athyrium filix-femina / lady fern	1 GAL.	CONTAINER
COSE	43		Cornus sericea / red-osier dogwood	2 GAL.	CONTAINER
LOIN	22		Lonicera involucrata / black twinberry	2 GAL.	CONTAINER
PHCA	43		Physocarpus capitatus / ninebark	2 GAL.	CONTAINER
RONU	22		Rosa nutkana / Nootka rose	2 GAL.	CONTAINER
RUSP	11		Rubus spectabilis / salmonberry	2 GAL.	CONTAINER
SASC	22		Salix scouleriana / Scouler's willow	LIVE STAKES	
SASE	11		Salix sessifolia / soft-leaved willow	LIVE STAKES	
SASI	11		Salix sitchensis / Sitka willow	LIVE STAKES	
SARA	11		Sambucus racemosa / red elderberry	2 GAL.	CONTAINER
SPDO	11		Spiraea douglasii / Douglas spirea	1 GAL.	CONTAINER

SEED MIX

ABBR.			BOTANICAL /COMMON NAME	
ALPL			Alisma plantago-aquatica / American water plantain	See specifications for details on seed mix.
BRVU			Bromus vulgaris / Columbia brome	
CADEW			Carex deweyana / Dewey sedge	
FERU			Festuca rubra rubra / red fescue	
JUEF			Juncus effusus / soft rush	
SCMI			Scirpus microcarpus / small-fruited bulrush	
TOME			Tolmeia menziesii / piggy-back plant	

PLANTING LEGENDS

COMMUNITY-SPECIFIC PLANTING NOTES:

UPLAND

1. ACER CIRCINATUM AND POLYSTICHUM MUNITUM SHALL BE PLANTED WITH AND ON THE NORTH SIDE OF EITHER THUJA PLICATA OR PSEUDOTSUGA MENZIESII.

TRANSITIONAL

1. THUJA PLICATA SHALL BE PLANTED ON THE NORTH SIDE OF OTHER PLANTINGS, ENABLING IT TO BE PARTIALLY SHADED.
2. ACER CIRCINATUM SHALL BE PLANTED WITH AND ON THE NORTH SIDE OF OTHER, PREFERABLY LARGER PLANTINGS.

RIPARIAN

1. ATHYRIUM FILIX-FEMINA SHALL BE PLANTED ON THE NORTH SIDE OF OTHER TREE AND SHRUB PLANTINGS, IDEALLY IN THE WETTEST AREAS.

DESIGNED	RCR
DRAWN	RCR
CRP	
HOR.	SHOWN
VERT.	N/A
DATE	5/26/06
DWG.	SR16
SHEET	X OF X

CALL 48 HOURS BEFORE YOU DIG 1-800-553-4344 "It's the Law" NORTHWEST UTILITIES NOTIFICATION CENTER

DESIGN & ENGINEERING DIVISION
DESIGN SECTION

PLANTING LEGEND

VIGIL AGRIMIS, INC.
Engineering Landscape Architecture Environmental Science
819 SE Morrison St, Suite 310
Portland, Oregon
97214
503.274.2010
fax: 503.274.2024
www.vigil-agrimis.com

CLARK COUNTY WASHINGTON

Path: \\KRAGE001\CAD\Plat Dwg Filenames: SR14-17_PLANTING_PLAN_KRAGE001 Plot date: Jun 01, 2006-11:02:15am CAD User: eschulz.
Ref Filenames: | TITLE_BLK | KRAGE001_BASE | KRAGE001_SURVEY | KRAGE001_UNDERGDN | KRAGE001_HEC |

50% SUBMITTAL

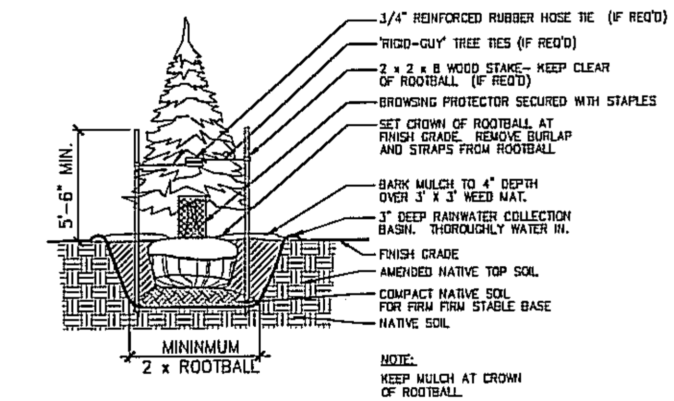

1 EVERGREEN TREE PLANTING
SCALE: NTS

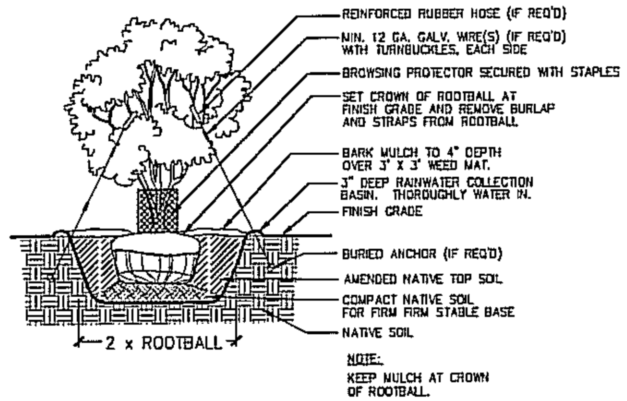

2 MULTI-STEM TREE PLANTING
SCALE: NTS

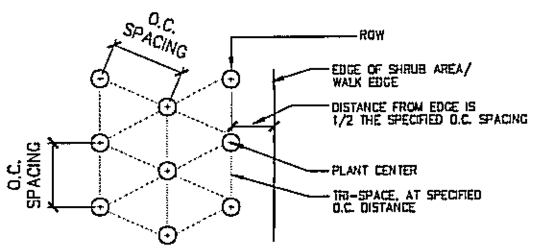

3 TYP. PLANT SPACING
SCALE: NTS

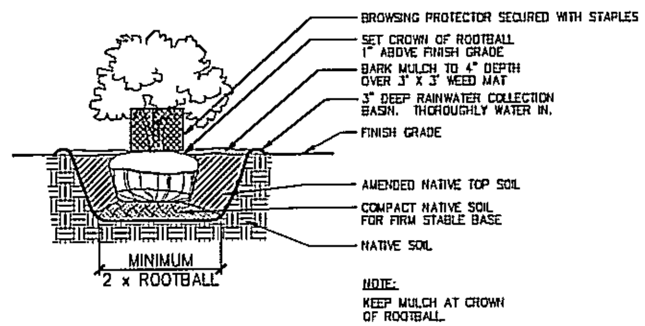

4 CONTAINER SHRUB & GROUND COVER PLANTING
SCALE: NTS

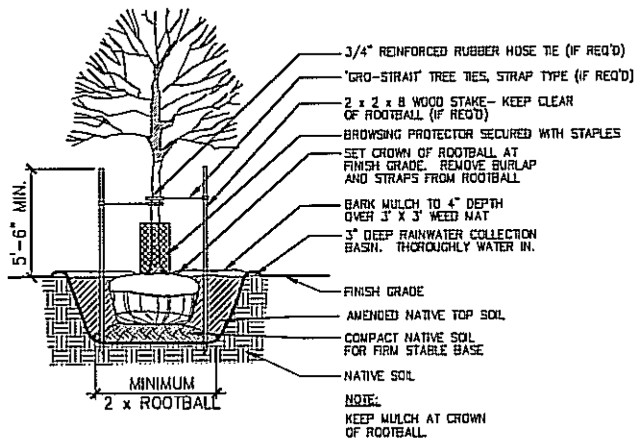

5 DECIDUOUS TREE PLANTING
SCALE: NTS

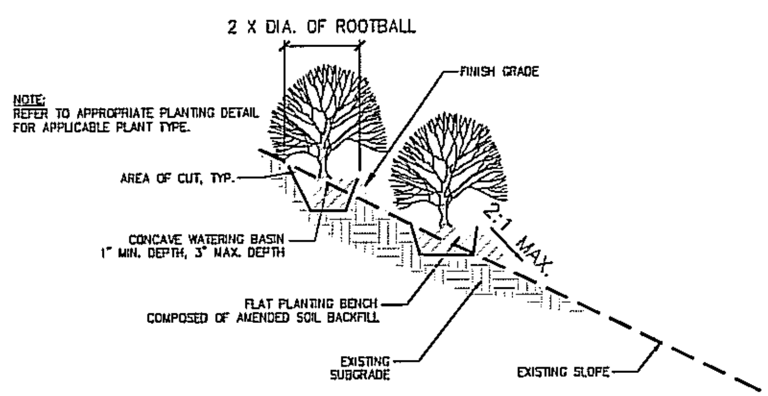

6 TREE, SHRUB & HERB PLANTING ON SLOPING SURFACES
SCALE: NTS

PLANTING DETAILS & NOTES

GENERAL NOTES:

1. CONTRACTOR SHALL VERIFY ALL QUANTITIES, MEASUREMENTS AND SITE CONDITIONS.

2. EMERGENT SEED AREAS SHALL RECEIVE COIR BLANKET STAPLED INTO PLACE AFTER FINE GRADING AND SEEDING ARE COMPLETED.

3. CONTRACTOR SHALL REMOVE ALL STRUCTURES AND ORNAMENTAL LANDSCAPING, INCLUDING HOLLY, IVY, AND LAUREL, PRIOR TO COMMENCEMENT OF WORK.

4. CONTRACTOR SHALL COORDINATE WEED ERADICATION WITH CLARK COUNTY WEED MANAGEMENT. PHYSICAL REMOVAL OF WEEDS BY THE CONTRACTOR SHALL BE PERMISSIBLE. HERBICIDE USE AND CHEMICAL ERADICATION SHALL BE PERFORMED BY CLARK COUNTY. CONTROL BLACKBERRIES, THISTLE, TEASEL, PURPLE LOOSESTRIFE, SCOT'S BROOM, REED CANARYGRASS, ENGLISH IVY AND JAPANESE KNOTWEED WHICH MAY DEVELOP ON SITE FOR DURATION OF WARRANTY PERIOD.

5. CONTRACTOR SHALL REPAIR AND SEED ALL AREAS DISTURBED THROUGHOUT COURSE OF CONSTRUCTION WITH APPROPRIATE SEED MIX AND APPLICATION RATE AS PRESCRIBED IN PLANT LEGEND AND SPECIFICATIONS. CONTRACTOR MAY SELECT SEEDING METHOD WITH APPROVAL OF CLARK COUNTY REPRESENTATIVE. AREAS WHICH FAIL TO ESTABLISH UNIFORM COVER SHALL BE RESEEDED AS NECESSARY.

6. INSTALLATION OF WOODY PLANT MATERIALS, INCLUDING CONTAINERS AND LIVE STAKES, IS EXCLUDED FROM THE BRIDGE CONTRACT.

PLANTING NOTES:

1. ALL PLANT MATERIALS USED SHALL BE GROWN IN CLARK COUNTY VICINITY, AND GROWN WITHIN 50 MILES OF THE PROJECT SITE. PLANT MATERIAL SHALL BE PROPAGATED FROM NATIVE SEED SOURCES, LOCAL TO OREGON OR WASHINGTON, WEST OF THE CASCADES. PROVIDE ONLY SOUND, HEALTHY, VIGOROUS PLANTS, FREE OF DEFECTS, DISEASES AND ALL FORMS OF INFESTATION.

2. A PRE-PLANTING MEETING WILL BE HELD UPON COMPLETION OF FINE-GRADING. LANDSCAPE CONTRACTOR SHALL CONTACT OWNER'S REPRESENTATIVE A MINIMUM OF TWO WORKING DAYS IN ADVANCE. PRIOR TO THE MEETING, LANDSCAPE CONTRACTOR MUST SUBMIT SAMPLES OF COMPOST, BARK MULCH, SEED, BROWSE PROTECTORS, AND NURSERY SHIPPING LIST TO OWNER'S REPRESENTATIVE FOR APPROVAL. THE CONTRACTOR WILL STAKE OR FLAG PROPOSED PLANT LOCATIONS, INCLUDING THE CORNERS OF AREAS SHOWN FOR EMERGENT PLANTS, GROUND COVER AND SHRUB MASSES. OWNER'S REPRESENTATIVE WILL PROVIDE DIRECTION AND MAKE ADJUSTMENTS TO PLANT LOCATIONS AT THIS TIME. NO PLANTING WILL BE PERFORMED BEFORE THIS MEETING.

3. PLANTING PERIOD IS WEATHER DEPENDENT, MID-NOVEMBER TO MID-MARCH, AND PLANTING SEQUENCE SHALL BE ADJUSTED ACCORDING TO SOIL MOISTURE. ALL PLANTINGS SHALL BE COMPLETE BY THE FIFTEENTH OF MARCH UNLESS PLANTING PERIOD IS EXTENDED BY OWNER'S REPRESENTATIVE AS A RESULT OF CONTINUING MILD WEATHER. HERBACEOUS WETLAND MAY BE PLANTED IN LATE SUMMER IF GROUNDWATER MOISTENS THOSE PLANTING AREAS. HOWEVER, WOODY PLANT MATERIALS SHALL NOT BE PLANTED UNTIL FALL RAINS HAVE MOISTENED UPLAND LOCATIONS

4. KEEP PLANTS MOIST AND SHADED UNTIL INSTALLATION. DO NOT LEAVE THEM IN THE SUN OR LET THEM DRY OUT. THOROUGHLY WATER IN NEWLY PLANTED AREAS AND SATURATE EMERGENT PLANTS WITHIN 12 HOURS AFTER INSTALLATION.

5. DIG, PACK, TRANSPORT AND HANDLE ALL PLANTS WITH CARE TO ENSURE PROTECTION FROM INJURY. STORE PLANTS IN THE MANNER NECESSARY TO ACCOMMODATE THEIR HORTICULTURAL REQUIREMENTS. HEEL-IN PLANTS TO PROTECT ROOT BALLS AND KEEP THEM FROM DRYING OUT.

6. USE COMPOST AS SPECIFIED IN SPECIAL PROVISION SECTION 8-02.3(5) AND 8-02.3(6) OR EQUAL APPROVED BY CLARK COUNTY.

7. ALL PLANTS, MATERIALS, PLANTING AND SEEDING ACTIVITIES SHALL CONFORM IN SIZE AND GRADE TO THE 'AMERICAN STANDARD FOR NURSERY STOCK'. INFERIOR PLANTS SEED, OR WORKMANSHIP SHALL BE REJECTED BY OWNER'S REPRESENTATIVE.

8. PLANTS SHALL NOT BE INSTALLED WITHIN 5 FEET OF FENCE OR WITHIN 20 FEET OF CULVERT, INLET OR MANHOLE.

9. PLANT SUBSTITUTION REQUEST MUST BE SUBMITTED TO CLARK COUNTY REPRESENTATIVE FOR APPROVAL.

10. CONTRACTOR SHALL PROVIDE THREE-YEAR PLANT WARRANTY AFTER ACCEPTANCE OF PLANTING. THE CONTRACTOR SHALL REPLACE ALL DEAD OR UNHEALTHY PLANTS FOUND BY OWNER'S REPRESENTATIVE AT THE END OF EACH ESTABLISHMENT PERIOD UNDER WARRANTY.

11. CONTRACTOR SHALL MAINTAIN WEEKLY; OR AS NEEDED TO PROVIDE ADEQUATE WATERING OF INSTALLED PLANTS TO ENSURE HEALTH AND SURVIVAL. CONTRACTOR SHALL BE RESPONSIBLE FOR THE ON-GOING HEALTH AND VIGOR OF PLANTS DURING THE PLANT ESTABLISHMENT PERIOD AS SPECIFIED IN SECTION 8-02.3(13) OF THE AMENDMENTS TO THE STANDARD SPECIFICATIONS. MAINTNENANCE SHALL INCLUDE MOW TALL GRASS/WEEDS, MONITOR TREE STAKES AND GUYS TO ENSURE PROPER SUPPORT WITHOUT DAMAGE TO TREE, AND RE-APPLY BARK MULCH AS NEEDED.

12. MITIGATION PLANTING SEQUENCE:
    - A. DIG A HOLE TWICE THE DIMENSION OF THE PLANT CONTAINER TO BE INSTALLED.
    - B. IF SOIL LACKS SUFFICIENT ORGANIC MATTER, ADD AN EQUAL PORTION OF COMPOST TO THE EXCAVATED NATIVE SOIL AND MIX THOROUGHLY UNTIL UNIFORM CONSISTENCY, BREAKING UP CHUNKS OF SOIL, REMOVING LARGE ROCKS AND INORGANIC DEBRIS.
    - C. IF SOIL IS DRY, ADD WATER TO HOLE TO THOROUGHLY WET SOIL PRIOR TO PLANTING.
    - D. REMOVE PLANT FROM CONTAINER WITH CARE TO PREVENT TEARING OR BREAKING ROOTS WITH WEIGHT OF SOIL. IF PLANT IS ROOT BOUND, MAKE A FEW VERTICAL CUTS IN THE ROOT BALL TO STIMULATE NEW ROOT GROWTH.

      PLACE PLANT IN CENTER OF HOLE ON FIRM GROUND TO PREVENT FUTURE SETTLING. THE ROOT CROWN OF THE PLANT SHALL BE AT THE SAME LEVEL AS THE FINISH GRADE.

      BACK FILL AMENDED NATIVE SOIL IN HOLE, REMOVING AIR POCKETS AND FIRMING SOIL AROUND ROOT BALL WITH HANDS.

      THE ROOT BALLS OF PLANTS SHALL NOT BE OUTSIDE OF CONTAINER AND EXPOSED TO AIR LONGER THAN THE NECESSARY TIME REQUIRED TO INSTALL PLANT IN THE GROUND.

      FILL HOLE UNTIL SOIL MEETS THE ROOT CROWN OF THE PLANT. THE ROOT CROWN SHALL NOT BE BURIED FOR ANY PROLONGED LENGTH OF TIME OTHER THAN NECESSARY DURING INSTALLATION OF PLANT.
    - E. USE EXCESS SOIL TO MAKE A 3 INCH BERM WITH AN APPROXIMATE 2 FOOT DIAMETER SURROUNDING THE PLANT, TO FORM A WATERING BASIN.
    - F. KEEP PLANTS MOIST AND SHADED UNTIL INSTALLATION. DO NOT LEAVE THEM IN THE SUN OR LET THEM DRY OUT. THOROUGHLY WATER IN NEWLY PLANTED AREAS AND SATURATE EMERGENT PLANTS WITHIN 12 HOURS AFTER INSTALLATION.
    - G. WATERING OF INSTALLED PLANTS SHALL CONTINUE AS NEEDED, UNTIL WEATHER ALLOWS CESSATION TO ENSURE HEALTH AND VIGOR OF PLANTS.
    - H. INSTALL APPROVED WEED MAT AROUND PLANT PER MANUFACTURER SPECIFICATIONS AND FIRMLY SECURE TO GROUND WITH STAPLES.
    - I. INSTALL APPROVED ANIMAL PROTECTOR AND FIRMLY SECURE TO GROUND. INSTALLED PLANTS SHALL NOT BE LEFT UNPROTECTED OVER NIGHT.
    - J. PLACE MULCH TO A DEPTH OF 4 INCHES AROUND THE PLANT, COVERING THE WEED MAT ENTIRELY.
    - K. STAKE ONLY PLANTS WHICH ARE NOT STABILIZED IN GROUND AND REQUIRE ADDITIONAL SUPPORT. IF NECESSARY, STAKE ACCORDING TO DETAIL SHOWN.
    - L. TREES REMOVED DURING CONSTRUCTION SHALL BE SALVAGED AND PLACED IN MITIGATION SITE AS DIRECTED BY OWNER'S REPRESENTATIVE.
    - M. EXCAVATE AND REMOVE A MINIMUM OF 24 INCHES OF SOIL IN AREAS COLONIZED BY REED CANARYGRASS OUTSIDE WETLAND BOUNDARY. BRING DISTURBED AREAS TO GRADE WITH CLEAN, WEED AND WEED SEED FREE TOPSOIL AS APPROVED BY OWNER'S REPRESENTATIVE. DISPOSE OF REED CANARYGRASS AND EXCAVATED SOIL OFF SITE.

DESIGNED	RCR
DRAWN	RCR
CRP	
HOR.	SHOWN
VERT.	N/A
DATE	5/26/06
DWG:	SR17
SHEET	X OF X

CALL 48 HOURS BEFORE YOU DIG 1-800-553-4344 "It's the Law"

DESIGN & ENGINEERING DIVISION
DESIGN SECTION

PLANTING DETAILS & NOTES

VIGIL AGRIMIS, INC.
819 SE Morrison St, Suite 310
Portland, Oregon
97214
503 274.2010
fax 503 274.2024
www.vigil-agrimis.com

CLARK COUNTY WASHINGTON

50% SUBMITTAL

NOTES:
1. DIVERSION PIPE TO REMAIN BETWEEN STATIONS 3+00 AND 4+80. FILL ABANDONED PIPE WITH CLSM.

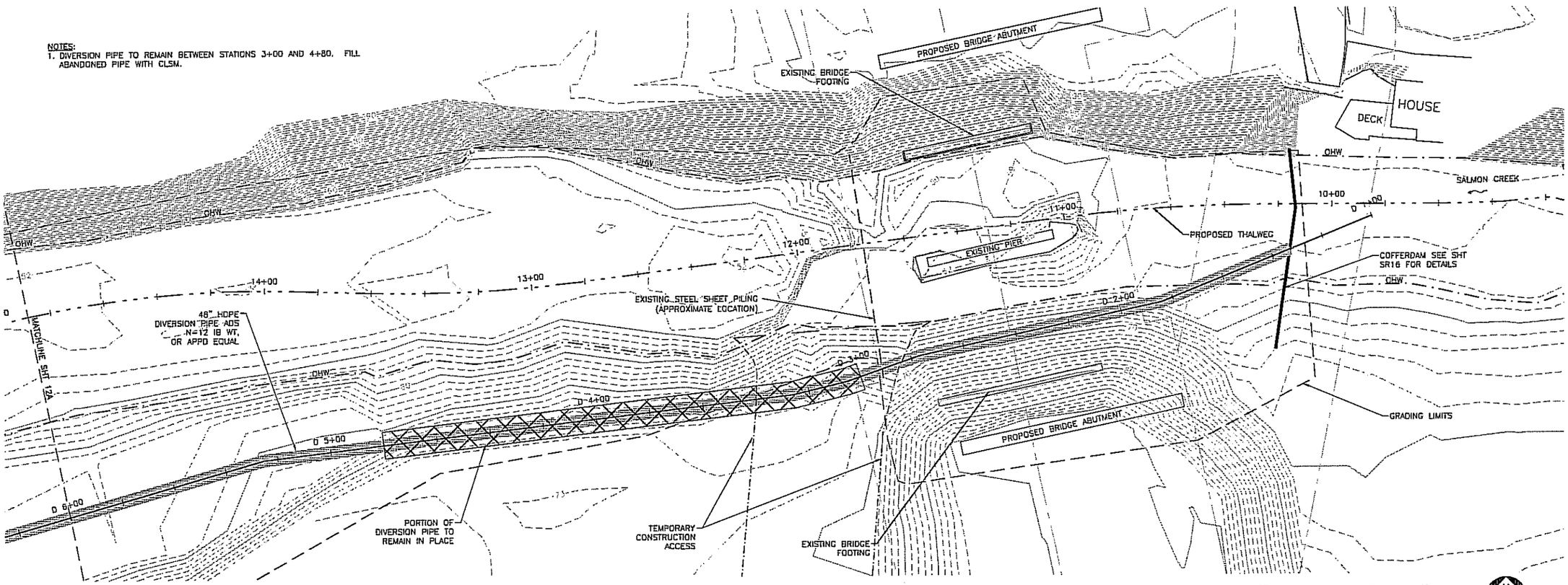

PLAN - STREAM DIVERSION STA D 1+00 TO STA D 6+00

SCALE: 1" = 20' (FOR 22X34" SHEETS)

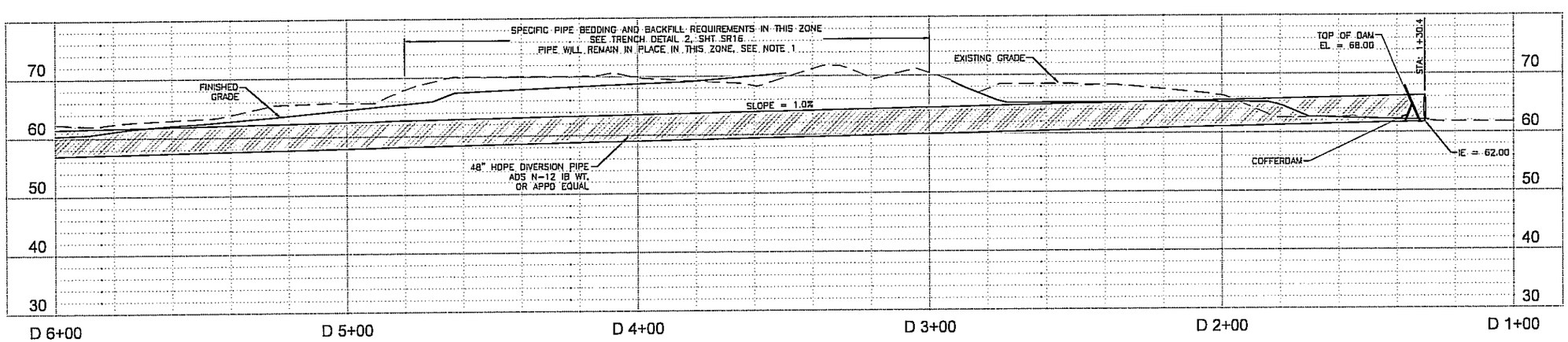

PROFILE DIVERSION PIPE STA D 1+00 TO STA D 6+00

HORIZONTAL SCALE: 1" = 20' (FOR 22X34" SHEETS)
VERTICAL SCALE: 1" = 10' (FOR 22X34" SHEETS)

DESIGNED	KMV
DRAWN	EES
CRP	
HOR.	SHOWN
VERT.	
DATE	5/26/06
DWG:	SR18
SHEET	X OF X

CALL 48 HOURS BEFORE YOU DIG 1-800-553-4344 "It's the Law" NORTHWEST UTILITIES NOTIFICATION CENTER

DESIGN & ENGINEERING DIVISION
DESIGN SECTION

STREAM DIVERSION
PLAN AND PROFILE

VIGIL AGRIMIS, INC.
Engineering, Landscape Architecture, Environmental Science
819 SE Morrison St., Suite 310
Portland, Oregon
97214
503.274.2010
fax: 503.274.2024
www.vigil-agrimis.com

CLARK COUNTY WASHINGTON

Path: \\KRAGE01\CAD\Plot Dwg Filename: SR18-19_DIVERSION_PP_KRAGE001 Plot date: Jun 01, 2006-11:05:21am CAD User: eschutz.
Xref Filenames: TITLE_BLK | KRAGE001_BASE | KRAGE001_SURVEY | KRAGE001_DIVERSION | KRAGE001_HEC |

50% SUBMITTAL

NOTES:
1. PLACE JERSEY BARRIER SO TOP OF BARRIER IS ABOVE OR LEVEL WITH TOP OF DIVERSION PIPE.

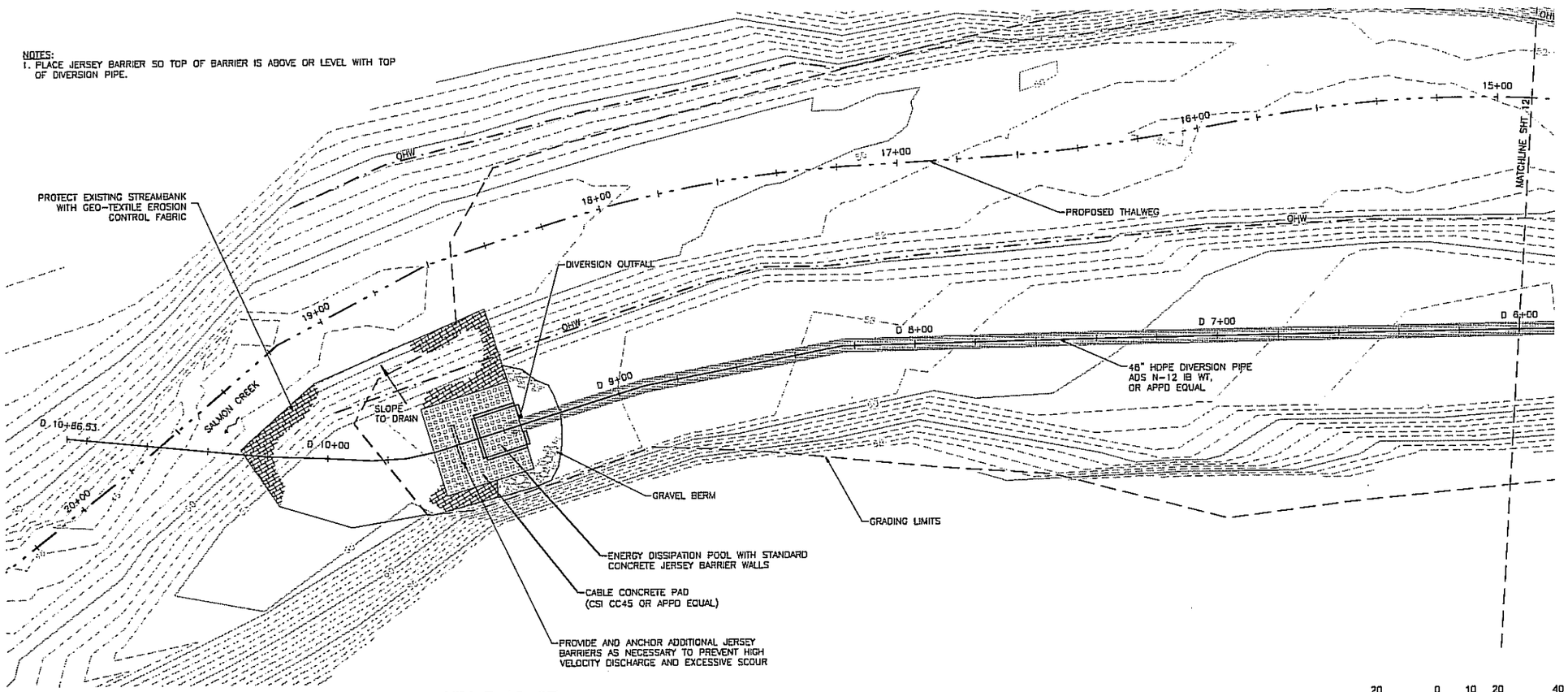

PLAN - STREAM DIVERSION STA D 6+00 TO STA D 10+87

SCALE: 1" = 20' (FOR 22X34" SHEETS)

20 0 10 20 40
SCALE FEET

NORTH

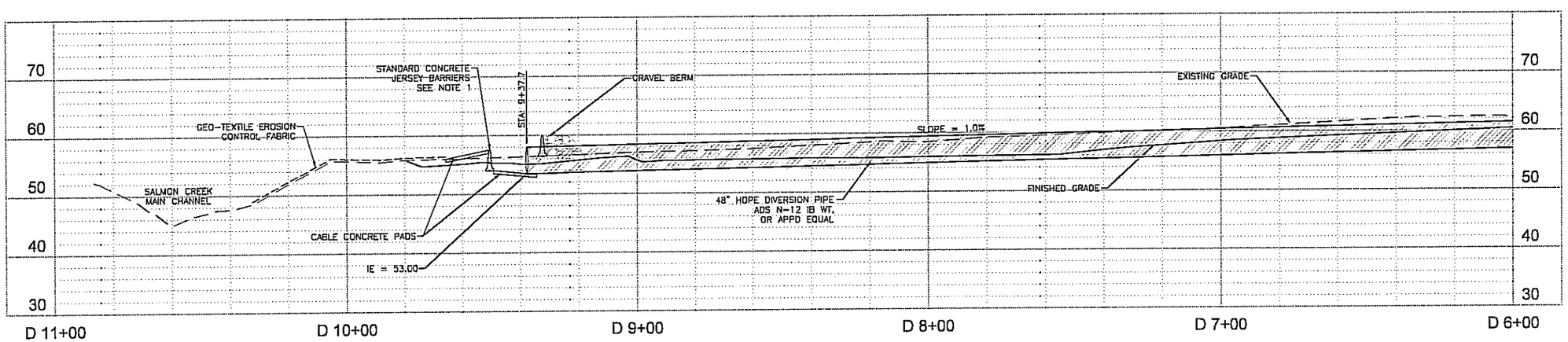

PROFILE - DIVERSION PIPE STA D 6+00 TO STA D 10+87

HORIZONTAL SCALE: 1" = 20' (FOR 22X34" SHEETS)
VERTICAL SCALE: 1" = 10' (FOR 22X34" SHEETS)

DESIGNED	KMV
DRAWN	EES
CRP	
HOR.	SHOWN
VERT.	
DATE	5/26/06
DWG.	SR19
SHEET	X OF X

CALL 48 HOURS BEFORE YOU DIG 1-800-553-4344 "It's the Law" NORTHWEST UTILITY NOTIFICATION CENTER

DESIGN & ENGINEERING DIVISION
DESIGN SECTION

STREAM DIVERSION
PLAN AND PROFILE

VIGIL AGRIMIS, INC.
Engineering Landscape Architecture Environmental Science
819 SE Morrison St., Suite 310
Portland, Oregon
97214
503.274.2010
fax: 503.274.2024
www.vigil-agrimis.com

CLARK COUNTY WASHINGTON

Path: \\RAGE001\CAD\Plot Dwg Filename: SR19-19_DIVERSION_PP_KRAGE001 Plot date: Jun 01, 2006-1:09:57am CAD User: eshult.
Xref Filename: | TITLE_BLK | KRAGE001_BASE | KRAGE001_SURVEY | KRAGE001_DIVERSION | KRAGE001_VEC |

50% SUBMITTAL

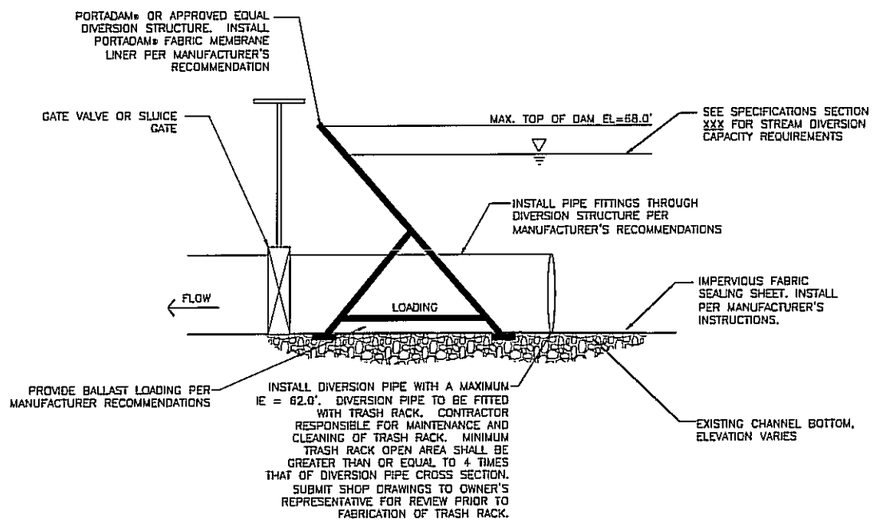

SECTION A-A'

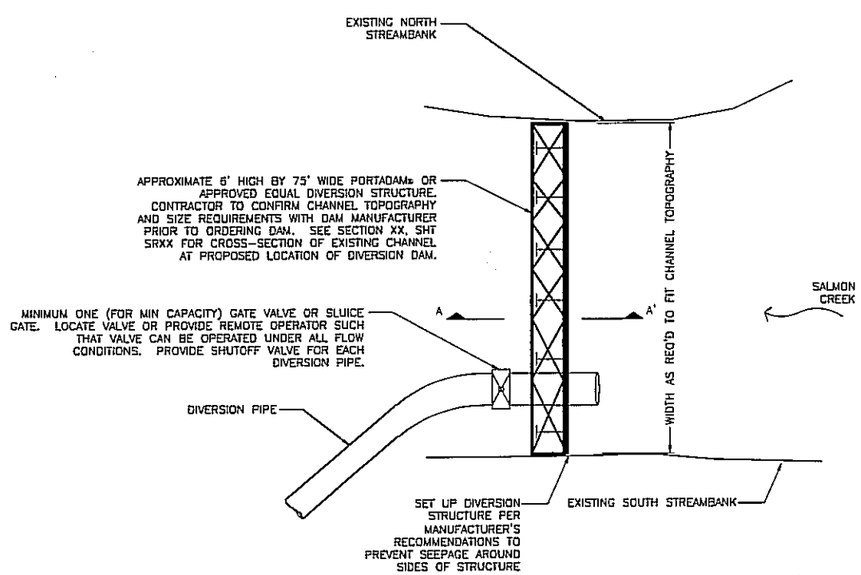

PLAN

1 COFFER DAM DETAIL

NTS

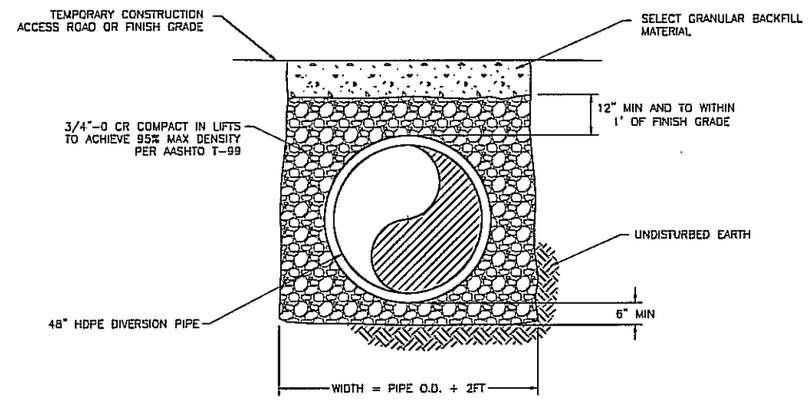

2 DIVERSION PIPE TRENCH DETAIL

NTS

DESIGNED	KMV
DRAWN	EES
CRP	
HOR.	SHOWN
VERT.	N/A
DATE	5/26/06
DWG:	SR20
SHEET	X OF X

CALL 48 HOURS BEFORE YOU DIG 1-800-553-4344 "It's the Law" NORTHWEST UTILITY NOTIFICATION CENTER

DESIGN & ENGINEERING DIVISION
DESIGN SECTION

STREAM DIVERSION
NOTES AND DETAILS

VIGIL AGRIMIS, INC.
Engineering, Landscape Architecture, Environmental Science
819 SE Morrison St., Suite 310
Portland, Oregon
97214
503.274.2010
fax: 503.274.2024
www.vigilagrimis.com

CLARK COUNTY WASHINGTON

Path: V:\RAGE001\CAD\Plot Dwg Filename: SR20_DW_DETAILS_KRAGE001 Plot date: Jun 01, 2006-11:11:15am CAD User: eschulz.
Xref Filename: TITLEBLK1

50% SUBMITTAL

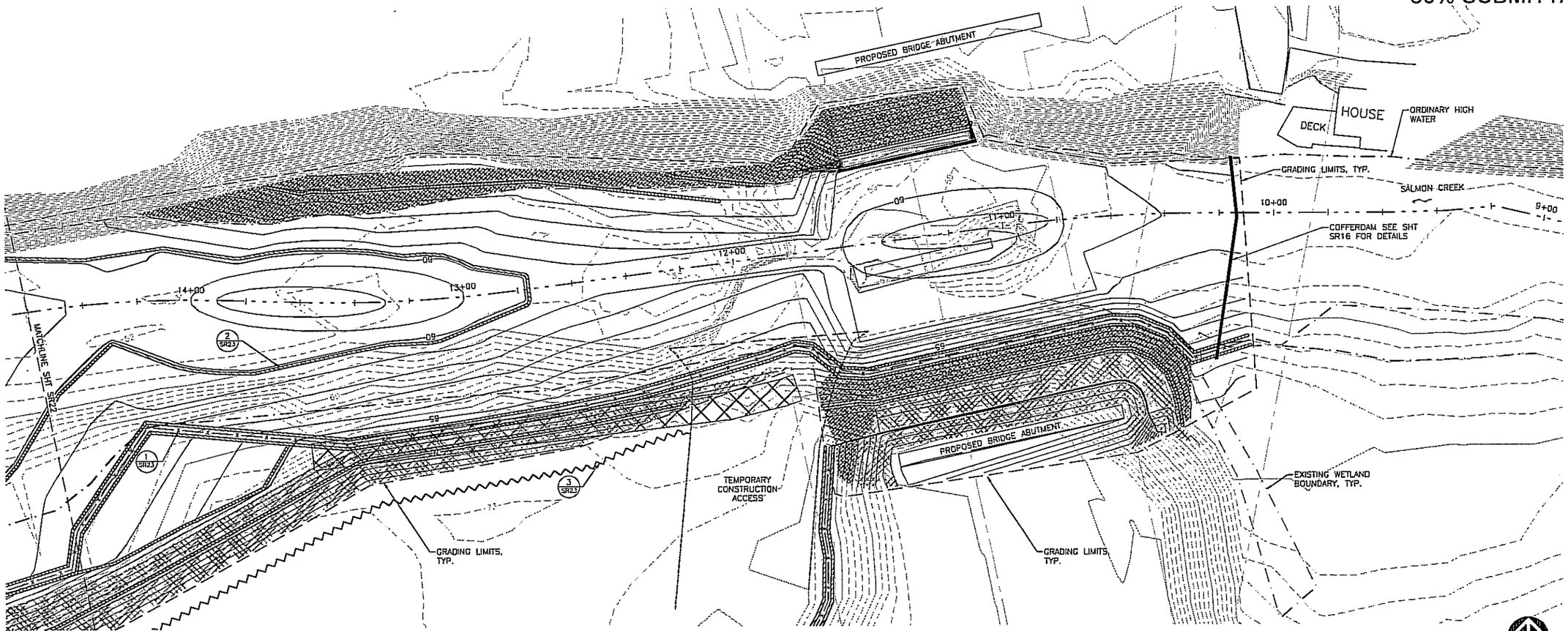

EROSION CONTROL PLAN

SCALE: 1" = 20' (FOR 22X34" SHEETS)

LEGEND

- STRAW WATTLES
- EXCLUSION ZONE FENCE / WORK LIMIT LINE
- COIR EROSION CONTROL FABRIC
- COIR EROSION CONTROL FABRIC W/LIVE STAKES
- CLEARING AND GRUBBING LIMITS
- SEDIMENT FENCE

DESIGNED	RCR
DRAWN	RCR
CRP	
HOR.	SHOWN
VERT.	N/A
DATE	5/26/06
DWG:	SR21
SHEET	X OF X

CALL 48 HOURS BEFORE YOU DIG 1-800-553-4344 "It's the Law" NORTHWEST UTILITY NOTIFICATION CENTER

DESIGN & ENGINEERING DIVISION
DESIGN SECTION

EROSION CONTROL PLAN

VIGIL AGRIMIS, INC.
Engineering, Landscape Architecture, Environmental Science
519 SW Morrison St., Suite 310
Portland, Oregon
97214
503.274.2010
fax: 503.274.2024
www.vigil-agrimis.com

CLARK COUNTY WASHINGTON

Path: \\VRAZE001\CAD\Plat Dwg Filename: SR21-23_EROS_CONTR_PLAN_VRAZE001 Plot date: Jun 01, 2006-11:14:10am CAD User: eschulz.
Xref Filename: | TITLE_BLK | KRAZE001_BASE | KRAZE001_SURVEY | KRAZE001_DIVERSION | KRAZE001_HEC |

50% SUBMITTAL

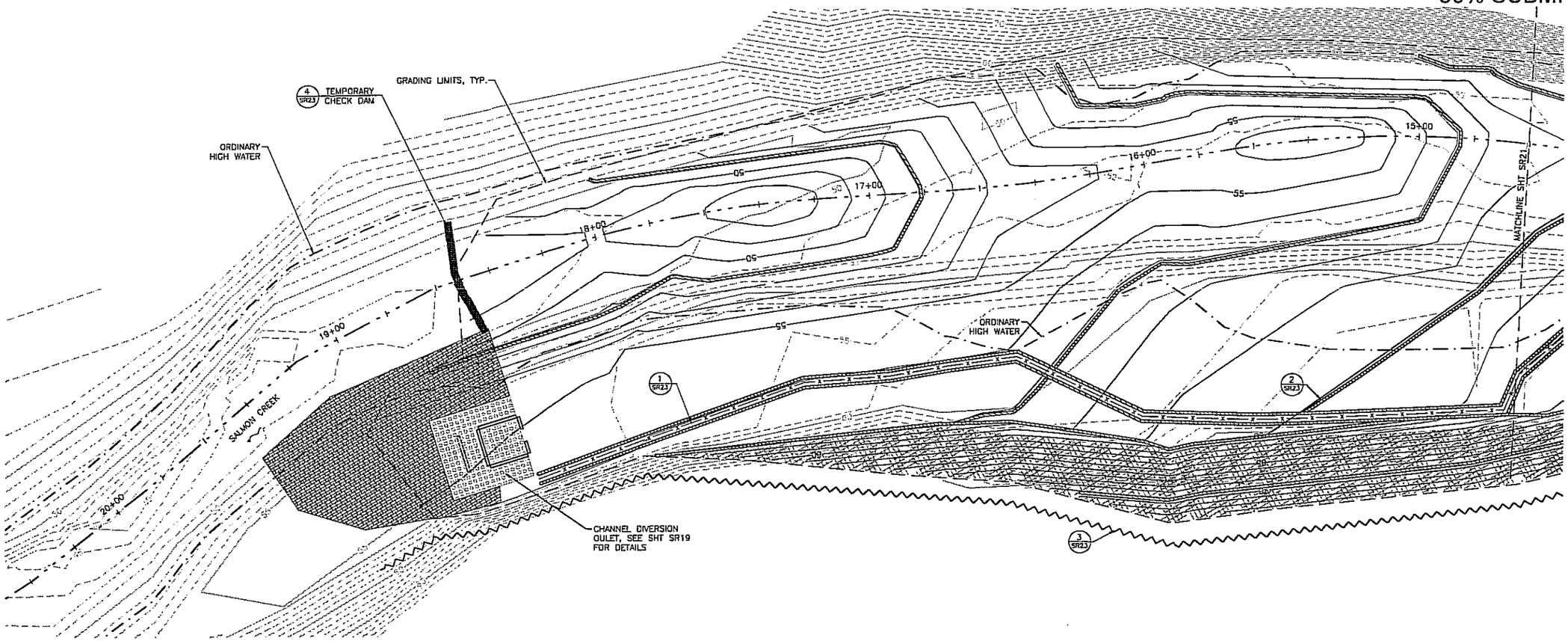

EROSION CONTROL PLAN

SCALE: 1" = 20' (FOR 22X34" SHEETS)

20 0 10 20 40
SCALE FEET

NORTH

LEGEND

- STRAW WATTLES
- EXCLUSION ZONE FENCE / WORK LIMIT LINE
- COIR EROSION CONTROL FABRIC
- COIR EROSION CONTROL FABRIC W/LIVE STAKES
- CLEARING AND GRUBBING LIMITS
- SEDIMENT FENCE

DESIGNED	RCR
DRAWN	RCR
CRP	
HOR.	SHOWN
VERT.	N/A
DATE	5/26/05
DWG:	SR22
SHEET	X OF X

CALL 48 HOURS BEFORE YOU DIG 1-800-553-4344 "It's the Law" NORTHWEST UTILITY NOTIFICATION CENTER

DESIGN & ENGINEERING DIVISION
DESIGN SECTION

EROSION CONTROL PLAN

VIGIL AGRIMIS, INC.
Engineering, Landscape Architecture, Environmental Science
819 SE Morrison St., Suite 310
Portland, Oregon
97214
503.274.2010
fax: 503.274.2024
www.vigil-agrimis.com

CLARK COUNTY WASHINGTON

Path: \\RAGE00\CAD\Plat Dwg Filename: SR21-23_EROS_CONT_PLAN_RAGE00 Plot date: Jun 01, 2006-11:52am CAD User: eschulz
Xref Filename: | TITLE_BLK | RAGE00_BASE | RAGE00_SURVEY | RAGE00_DIVERSION | RAGE00_REC |

50% SUBMITTAL

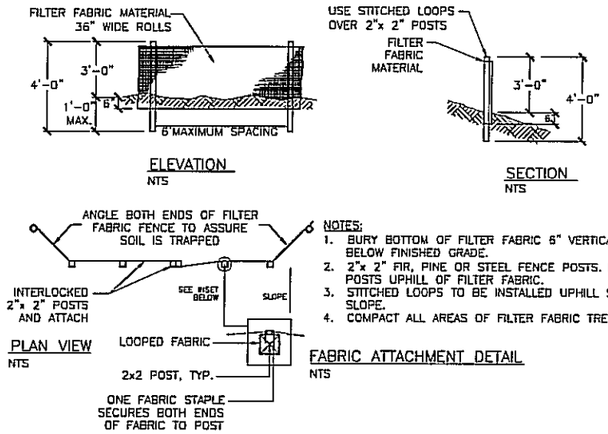

NOTES:
1. BURY BOTTOM OF FILTER FABRIC 6" VERTICALLY BELOW FINISHED GRADE.
2. 2"x 2" FIR, PINE OR STEEL FENCE POSTS. INSTALL POSTS UPHILL OF FILTER FABRIC.
3. STITCHED LOOPS TO BE INSTALLED UPHILL SIDE OF SLOPE.
4. COMPACT ALL AREAS OF FILTER FABRIC TRENCH.

1 SEDIMENT FENCE
NTS

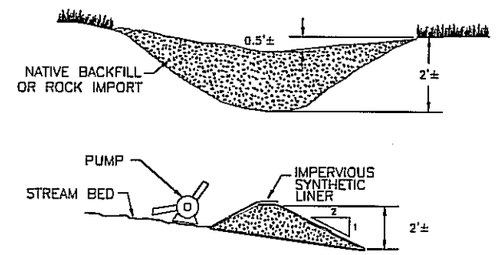

NOTE:
1. A ROCK CHECK DAM AS SHOWN, SHALL BE CONSTRUCTED TO CAPTURE RUNOFF FROM CONSTRUCTION ZONE. (STREAMBED MATERIAL IS PREFERABLE BECAUSE IT MAY BE USED FOR CONSTRUCTED STREAMBED FOLLOWING GRADING.)
2. CAPTURED RUNOFF SHALL BE PUMPED TO CHANNEL DIVERSION OUTLET AREA FOR FILTERING.

4 TEMPORARY CHECK DAM
NTS

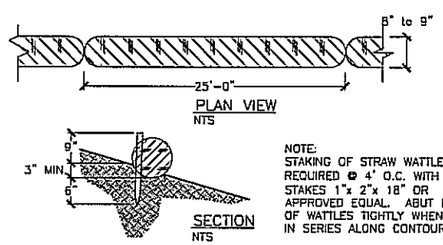

NOTE:
STAKING OF STRAW WATTLES REQUIRED @ 4' O.C. WITH WOOD STAKES 1"x 2"x 18" OR APPROVED EQUAL. ABUT ENDS OF WATTLES TIGHTLY WHEN USED IN SERIES ALONG CONTOURS.

1 STRAW WATTLE DETAIL
SCALE: NTS

2 STRAW WATTLE
NTS

NOTES:
1. 2"x 2" STEEL FENCE POSTS. INSTALL AS SHOWN ON PLANS.
2. FASTEN FABRIC TO FENCE PER MANUFACTURERS RECOMMENDATION.
3. ENSURE ALL POSTS ARE SET FIRM AND STABLE INTO GROUND MIN. 2'-0" DEPTH.

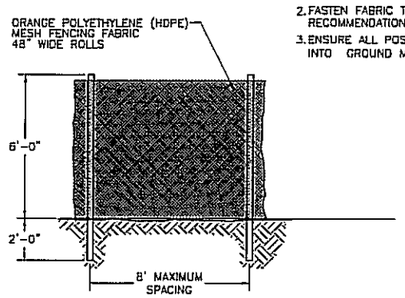

3 EXCLUSION ZONE FENCE
NTS

EROSION CONTROL NOTES:

1. THE CONTRACTOR SHALL INSTALL AND MAINTAIN BMP'S AS SHOWN AND PERFORM ALL ACTIONS NECESSARY TO PREVENT EROSION, AND CONTROL SEDIMENT FROM LEAVING THE CONSTRUCTION SITE. SITE CONTRACTOR SHALL COMPLY WITH CLARK COUNTY CODE CHAPTER 40.380.050.
2. ALL EROSION CONTROL MEASURES SHALL BE IN-PLACE AND IN WORKING CONDITION PRIOR TO DISTURBING AND EXPOSING ANY SOIL SURFACES (I.E. SILT FENCE, CONSTRUCTION ENTRANCE, SEDIMENTATION BARRIERS, SEDIMENTATION TRAPS).
3. ALL EROSION PREVENTION AND CONTROL BMP'S SHALL BE MAINTAINED AND REPAIRED AS NEEDED TO INSURE CONTINUED PERFORMANCE OF THEIR INTENDED FUNCTION. NEEDED REPAIRS SHALL BE MADE AS SOON AS PRACTICABLE. THEY ARE TO REMAIN IN PLACE AND OPERATIONAL DURING ALL PHASES OF CONSTRUCTION. CONSTRUCTION ACTIVITIES SHALL NOT CONTINUE OR RESUME UNTIL REPAIRS TO EROSION CONTROL FACILITIES ARE MADE AND THE FACILITIES ARE FUNCTIONAL. ANY SEDIMENT LEAVING THE SITE OR DISCHARGING TO A SENSITIVE AREA SHALL BE STOPPED AND CONTROLLED IMMEDIATELY. CONTAMINATED AREAS SHALL BE CLEANED AND RESTORED.
4. CLEARING LIMITS AND WORK AREA LIMITS SHALL BE DELINEATED AND MARKED. DO NOT DISTURB MORE AREA THAN NEEDED FOR CONSTRUCTION REQUIREMENTS.
5. ALL SENSITIVE OR CRITICAL AREAS (WETLANDS, STEEP SLOPES, NATURAL WATERWAYS), AND BUFFERS SHALL ALL BE CLEARLY DELINEATED AND CLEARLY MARKED, AND PROTECTED FROM SEDIMENT DEPOSITION.
6. SEDIMENT LADEN RUNOFF SHALL BE PREVENTED FROM ENTERING ALL EXISTING STORM WATER CATCH BASINS AND INLETS AFFECTED BY CONSTRUCTION.
7. NO EXPOSED, BARE SOILS SHALL REMAIN UN-STABILIZED FOR MORE THAN TWO DAYS DURING THE PERIOD OF OCTOBER 1 THRU APRIL 30 OR FOR MORE THAN SEVEN DAYS DURING THE PERIOD OF MAY 1 THRU SEPTEMBER 30. ALL DISTURBED SOIL SURFACES SHALL BE STABILIZED BY A SUITABLE APPLICATION OF "BEST MANAGEMENT PRACTICES".
8. WHERE FEASIBLE, NO MORE THAN 500 FEET OF TRENCH SHALL BE OPEN AT ONE TIME. EXCAVATED MATERIAL SHALL BE PLACED ON THE UPHILL SIDE OF TRENCHES PROVIDED IT DOES NOT CONFLICT WITH SAFETY REQUIREMENTS.
9. DEWATERING DEVICES SHALL DISCHARGE INTO A SEDIMENT TRAP OR SEDIMENT POND. NO DISCHARGE SHALL BE MADE TO A PAVED STREET OR STORMWATER COLLECTION SYSTEM WITHOUT FIRST REMOVING SEDIMENT.
10. CUT AND FILL SLOPES SHALL BE CONSTRUCTED IN A MANNER THAT WILL MINIMIZE EROSION. EROSION SHALL BE CONTROLLED AND PREVENTED BY SUCH MEASURES AS ROUGHENING THE SURFACE, INSTALLATION OF INTERCEPTOR DITCHES, TERRACING, COVERING WITH MATTING, MULCH OR PLASTIC SHEETING. RUNOFF SHALL BE PREVENTED FROM ENTERING A SLOPE AND FROM UNDERCUTTING THE BASE OF SLOPES.
11. ANY SOIL OR DEBRIS TRANSPORTED ONTO ROADWAYS AND SIDEWALKS SHALL BE REMOVED. DEPOSITS SHALL BE COMPLETELY REMOVED BY SHOVELING AND/OR SWEEPING. WASHING SHALL NOT BE UTILIZED UNLESS SPECIFICALLY APPROVED IN WRITING BY THE COUNTY.
12. ALL CONVEYANCE CHANNELS, BOTH TEMPORARY AND PERMANENT SHALL BE STABILIZED TO PREVENT EROSION OF THE CHANNEL. STABILIZATION SHALL EXTEND TO AREAS AT OUTLETS AND DOWNSTREAM REACHES VULNERABLE TO EROSION RESULTING FROM FLOW DISCHARGING FROM THE CHANNEL.
13. IF BMP'S SHOWN ARE UTILIZED BUT ARE INSUFFICIENT TO PREVENT SEDIMENT FROM REACHING WATER BODIES, ADJACENT PROPERTIES, OR PUBLIC RIGHT-OF-WAY; ADDITIONAL BMP'S SHALL BE IMPLEMENTED IMMEDIATELY TO PREVENT FURTHER ENCROACHMENT OF SEDIMENT.
14. STABILIZED AREAS SHALL BE PROVIDED FOR EMPLOYEE PARKING AND STORAGE OF CONSTRUCTION MATERIALS. ERODIBLE STOCKPILES OF EARTHEN MATERIALS, SUCH AS TOPSOIL, SILTY AND CLAYEY SOILS; AND LANDSCAPE MATERIALS, SHALL BE COVERED WHEN NOT BEING INCORPORATED IN THE WORK. EROSION CONTROL BMP'S SHALL BE UTILIZED AS NECESSARY TO PREVENT SEDIMENT LADEN RUNOFF LEAVING OR SEDIMENT BEING TRANSPORTED FROM THESE AREAS FROM VEHICLE ACTIVITY.
15. ALL POLLUTANTS OTHER THAN SEDIMENT THAT OCCUR DURING CONSTRUCTION SHALL BE HANDLED AND DISPOSED OF IN A MANNER THAT DOES NOT CAUSE CONTAMINATION OF STORM WATER.
16. THE CONTRACTOR SHALL KEEP AN INSPECTION LOG OF THE CONDITION OF THE EROSION CONTROL FACILITIES. EROSION CONTROL FACILITIES SHALL BE INSPECTED AT LEAST WEEKLY AND AFTER EACH RAINFALL. THE INSPECTION LOG SHALL BE KEPT AT THE PROJECT SITE AT A DESIGNATED LOCATION AND SHALL BE AVAILABLE FOR REVIEW BY THE COUNTY. AN INDIVIDUAL THAT HAS SUCCESSFULLY COMPLETED THE COUNTY'S EROSION CONTROL CERTIFICATION COURSE SHALL PERFORM INSPECTION AND MAINTAIN THE LOG.
17. ALL TEMPORARY BMP'S SHALL BE REMOVED WITHIN 30 DAYS AFTER FINAL SITE DESTABILIZATION IS ACHIEVED. TRAPPED SEDIMENT SHALL BE DEPOSITED AND STABILIZED ON SITE. AREAS DISTURBED RESULTING FROM REMOVAL SHALL BE PERMANENTLY STABILIZED.
18. CONSTRUCTION SHALL NOT BE CONSIDERED COMPLETE AND ACCEPTABLE UNTIL ALL DISTURBED SOIL SURFACES HAVE BEEN PROTECTED FROM EROSION WITH PERMANENT LANDSCAPING, COVERING WITH IMPERVIOUS SURFACES, RESTORED TO ORIGINAL UNDISTURBED CONDITION OR PERMANENTLY STABILIZED.
19. DURING DRY WEATHER CONSTRUCTION PERIODS THE CONTRACTOR SHALL PROVIDE PROJECT-SPECIFIC DUST CONTROL MEASURES THAT MAY INCLUDE: SEEDING, MULCHING MATTING, WATER, TACKIFIER, OR CHEMICAL SOIL STABILIZERS. THE CONTRACTOR SHALL MAINTAIN THE DUST CONTROL MEASURE THROUGH DRY WEATHER PERIODS UNTIL ALL DISTURBED AREAS HAVE BEEN STABILIZED. IMMEDIATELY RE-STABILIZE AREAS DISTURBED BY CONTRACTOR'S OPERATIONS OR OTHER ACTIVITIES (WIND, WATER, VANDALISM, ETC.).
20. MAINTENANCE AND REPAIR OF HEAVY EQUIPMENT AND VEHICLES WHICH INVOLVE POTENTIAL CONTAMINANTS (OIL, SOLVENTS, HYDRAULIC FLUID, ETC.) MUST BE CONDUCTED IN A MANNER WHICH PREVENTS CONTAMINATION OF SOILS, SURFACE WATER AND GROUND WATER. TARPS, DRIP PANS, OR OTHER APPROPRIATE MEASURES SHALL BE USED AS NECESSARY.
21. STRIPPING, TOPSOIL, AND UNSUITABLE MATERIAL STOCKPILES SHALL BE HYDROSEEDED WITH "REGREEN WHEAT X WHEAT GRASS HYBRID" BY HOBBS AND HOPKINS (OR APPROVED EQUAL). MAINTENANCE OF STOCKPILE AREAS AND REAPPLICATION OF HYDROSEED COVERING SHALL BE REQUIRED IF BARE SOIL IS PRESENT. DURING WINTER AND WET WEATHER CONDITIONS, STOCKPILES SHALL BE COVERED WITH PLASTIC SHEETING PER CLARK COUNTY DEPARTMENT OF PUBLIC WORKS STANDARD DETAIL E-16.

DESIGNED	RCR
DRAWN	RCR
CRP	
HOR.	SHOWN
VERT.	N/A
DATE	5/26/06
DWG:	SR23
SHEET	X OF X

CALL 48 HOURS BEFORE YOU DIG 1-800-553-4344 "It's the Law" NORTHWEST UTILITIES NOTIFICATION CENTER

DESIGN & ENGINEERING DIVISION
DESIGN SECTION

EROSION CONTROL DETAILS & NOTES

VIGIL AGRIMIS, INC.
Engineering, Landscape Architecture, Environmental Science
810 SE Morrison St., Suite 310
Portland, Oregon
97214
503.274.2010
fax 503.274.2022
www.vigil-agrimis.com

CLARK COUNTY WASHINGTON

Path: \\RAGE001\CAD\Plot Dwg Filename: SR21-23_EROS_CONT_PLAN_KRAGE001 Plot date: Jun 01, 2006-11:16:21am CAD User: vachuls.
Xref Filename: | TITLE_BLK | KRAGE001_BASE | KRAGE001_SURVEY | KRAGE001_DIVERSION | KRAGE001_REC |