CAPITAL IMPROVEMENTS PROGRAM
COUNTY ROAD PROJECT # 381122

NE 179TH STREET

INTERSTATE 5 TO NE 50TH AVENUE

PLANS FOR THE CONSTRUCTION OF
ROADWAYS, STORM DRAINAGE, RETAINING WALLS, AND SIGNALS

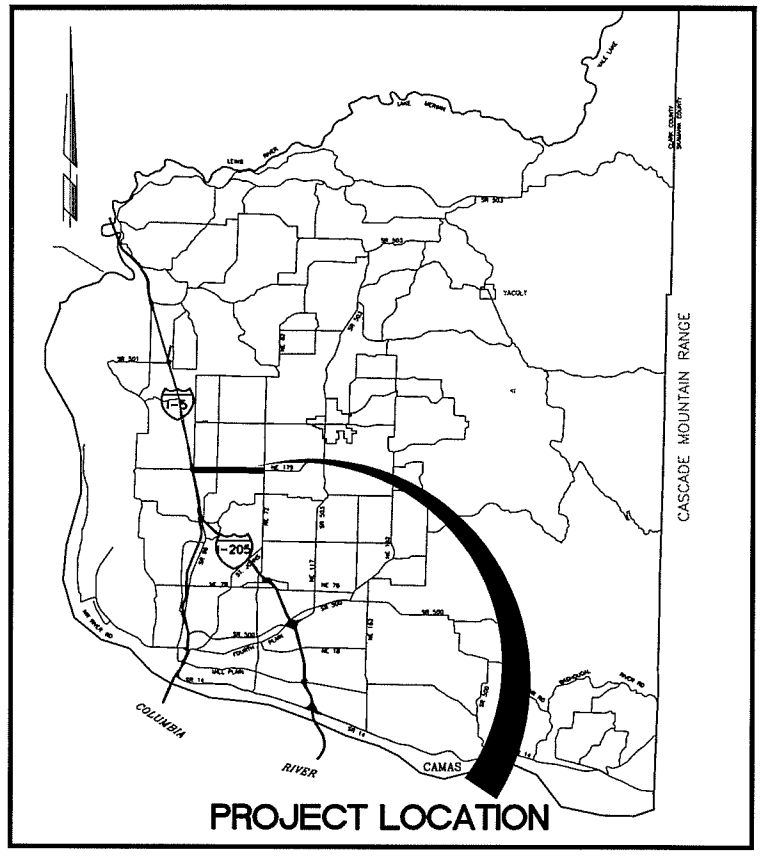

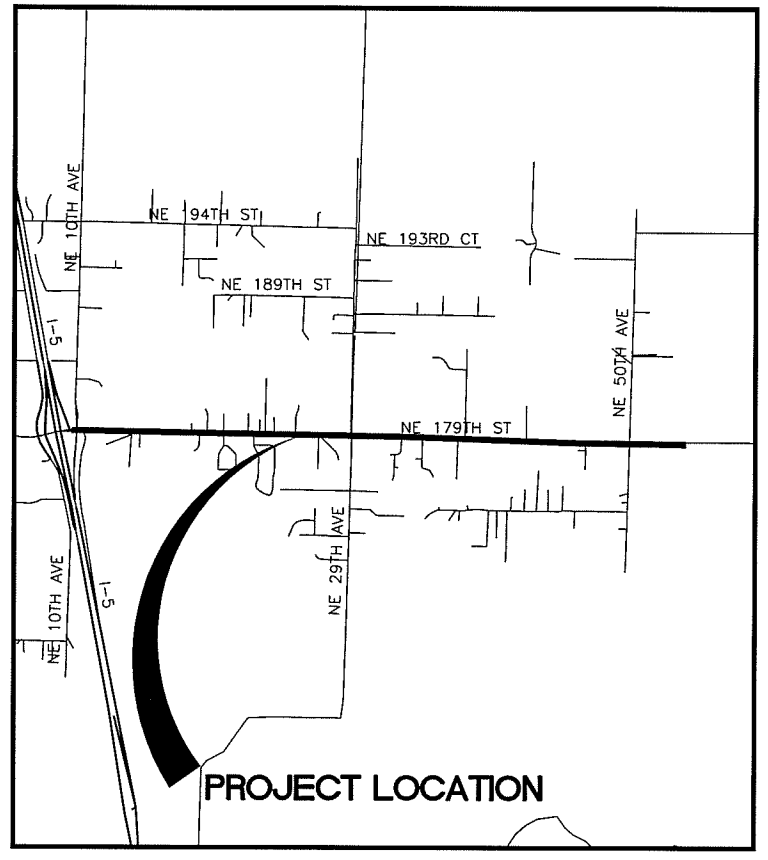

INDEX OF SHEETS

1 CV1 COVER SHEET
2 SQ1 SUMMARY OF QUANTITIES AND LEGEND
3 TS1 TYPICAL SECTIONS
4 TS2 TYPICAL SECTIONS
5 HV1 HORIZONTAL AND VERTICAL CONTROL
6 EC1 EROSION CONTROL PLAN
7 EC2 EROSION CONTROL PLAN
8 EC3 EROSION CONTROL PLAN
9 EC4 EROSION CONTROL PLAN
10 EC5 EROSION CONTROL DETAILS
11 EC6 EROSION CONTROL DETAILS
12 RD1 ROADWAY DETAILS
13 RD2 ROADWAY DETAILS
14 DD1 DRAINAGE DETAILS I
15 DD2 DRAINAGE DETAILS II
16 DD3 DRAINAGE DETAILS III
17 DD4 DRAINAGE DETAILS IV
18 DD5 DRAINAGE DETAILS V
19 DD6 DRAINAGE DETAILS VI
20 DSC1 STREAM CROSSING DETAILS I
21 DSC2 STREAM CROSSING DETAILS II
22 DSC3 STREAM CROSSING DETAILS III
23 SWF1 STORMWATER FACILITY #1
24 SWF1A STORMWATER FACILITY #1; STAKING PLAN
25 SWF1B STORMWATER FACILITY #1; ACCESS ROAD
26 SWF2 STORMWATER FACILITY #2
27 SWF2A STORMWATER FACILITY #2; STAKING PLAN
28 SWF3 STORMWATER FACILITY #3
29 SWF3A STORMWATER FACILITY #3; STAKING PLAN
30 SWF3B STORMWATER FACILITY #3; ACCESS ROAD
31 SWF4 STORMWATER FACILITY #4
32 SWF4A STORMWATER FACILITY #4; STAKING PLAN
33 W01 RETAINING WALLS
34 W02 RETAINING WALLS
35 W03 RETAINING WALLS
36 W04 RETAINING WALLS
37 W05 RETAINING WALLS
38 W06 RETAINING WALLS
39 WD01 RETAINING WALL DETAILS
40 WD02 RETAINING WALL DETAILS
41 WD03 RETAINING WALL DETAILS
42 B1 WHIPPLE CREEK CROSSING (STA 44+50)
43 B2 WHIPPLE CREEK CROSSING STAGING PLANS
44 B3 CREEK CROSSING (STA 72+50)
45 B4 CREEK CROSSING (STA 2+50) NE 29TH AVE
46 B5 TRIBUTARY MILL CREEK CROSSING (STA 91+30)
47 B6 SRW WALL SECTIONS
48 B7 MSE WALL SECTIONS
49 B8 LOCK & LOAD WALL SECTIONS
50 B9 WALL STAGING PLANS
51 B10 WALL STAGING PLANS
52 PP1 PLAN & PROFILE NE 179TH STREET (STA 23+00 TO 28+00)
53 PP2 PLAN & PROFILE NE 179TH STREET (STA 28+00 TO 33+00)
54 PP3 PLAN & PROFILE NE 179TH STREET (STA 33+00 TO 38+00)
55 PP4 PLAN & PROFILE NE 179TH STREET (STA 38+00 TO 43+00)
56 PP5 PLAN & PROFILE NE 179TH STREET (STA 43+00 TO 48+00)
57 PP6 PLAN & PROFILE NE 179TH STREET (STA 48+00 TO 53+00)
58 PP7 PLAN & PROFILE NE 179TH STREET (STA 53+00 TO 58+00)
59 PP8 PLAN & PROFILE NE 179TH STREET (STA 58+00 TO 63+00)
60 PP9 PLAN & PROFILE NE 179TH STREET (STA 63+00 TO 68+00)
61 PP10 PLAN & PROFILE NE 179TH STREET (STA 68+00 TO 73+00)
62 PP11 PLAN & PROFILE NE 179TH STREET (STA 73+00 TO 78+00)
63 PP12 PLAN & PROFILE NE 179TH STREET (STA 78+00 TO 83+00)
64 PP13 PLAN & PROFILE NE 179TH STREET (STA 83+00 TO 88+00)
65 PP14 PLAN & PROFILE NE 179TH STREET (STA 88+00 TO 93+00)
66 PP15 PLAN & PROFILE NE 179TH STREET (STA 93+00 TO 98+00)
67 PP16 PLAN & PROFILE NE 179TH STREET (STA 98+00 TO 103+00)
68 PP17 PLAN & PROFILE NE 179TH STREET (STA 103+00 TO 108+00)
69 PP18 PLAN & PROFILE NE 179TH STREET (STA 108+00 TO 113+00)
70 PP19 PLAN & PROFILE NE 179TH STREET (STA 113+00 TO 118+00)
71 PP20 PLAN & PROFILE NE 179TH STREET (STA 118+00 TO 123+00)
72 PP21 PLAN & PROFILE NE 179TH STREET (STA 123+00 TO 128+00)
73 PP22 PLAN & PROFILE NE 179TH STREET (STA 128+00 TO EOP)
74 PP23 PLAN & PROFILE NE 29TH AVE – NORTH
75 PP24 PLAN & PROFILE NE 29TH AVE – SOUTH (STA. 0+00 TO STA 5+00)
76 PP25 PLAN & PROFILE NE 50TH AVE – NORTH
77 PP26 PLAN & PROFILE NE 50TH AVE – SOUTH
78 PP27 PLAN & PROFILE NE 29TH AVE – SOUTH (STA 5+00 TO STA 10+00)
79 DP1 DRAINAGE PLAN NE 179TH STREET (STA 23+00 TO 28+00)
80 DP2 DRAINAGE PLAN NE 179TH STREET (STA 28+00 TO 33+00)
81 DP3 DRAINAGE PLAN NE 179TH STREET (STA 33+00 TO 38+00)
82 DP4 DRAINAGE PLAN NE 179TH STREET (STA 38+00 TO 43+00)
83 DP5 DRAINAGE PLAN NE 179TH STREET (STA 43+00 TO 48+00)
84 DP6 DRAINAGE PLAN NE 179TH STREET (STA 48+00 TO 53+00)
85 DP7 DRAINAGE PLAN NE 179TH STREET (STA 53+00 TO 58+00)
86 DP8 DRAINAGE PLAN NE 179TH STREET (STA 58+00 TO 63+00)
87 DP9 DRAINAGE PLAN NE 179TH STREET (STA 63+00 TO 68+00)
88 DP10 DRAINAGE PLAN NE 179TH STREET (STA 68+00 TO 73+00)
89 DP11 DRAINAGE PLAN NE 179TH STREET (STA 73+00 TO 78+00)
90 DP12 DRAINAGE PLAN NE 179TH STREET (STA 78+00 TO 83+00)
91 DP13 DRAINAGE PLAN NE 179TH STREET (STA 83+00 TO 88+00)
92 DP14 DRAINAGE PLAN NE 179TH STREET (STA 88+00 TO 93+00)
93 DP15 DRAINAGE PLAN NE 179TH STREET (STA 93+00 TO 98+00)
94 DP16 DRAINAGE PLAN NE 179TH STREET (STA 98+00 TO 103+00)
95 DP17 DRAINAGE PLAN NE 179TH STREET (STA 103+00 TO 108+00)
96 DP18 DRAINAGE PLAN NE 179TH STREET (STA 108+00 TO 113+00)
97 DP19 DRAINAGE PLAN NE 179TH STREET (STA 113+00 TO 118+00)
98 DP20 DRAINAGE PLAN NE 179TH STREET (STA 118+00 TO 123+00)
99 DP21 DRAINAGE PLAN NE 179TH STREET (STA 123+00 TO 128+00)
100 DP22 DRAINAGE PLAN NE 179TH STREET (STA 128+00 TO EOP)
101 DP23 DRAINAGE PLAN NE 29TH AVE – NORTH
102 DP24 DRAINAGE PLAN NE 29TH AVE – SOUTH (STA 0+00 TO STA 5+00)
103 DP25 DRAINAGE PLAN NE 50TH AVE – NORTH
104 DP26 DRAINAGE PLAN NE 50TH AVE – SOUTH
105 DP27 DRAINAGE PLAN NE 29TH AVE – SOUTH (STA 5+00 TO STA 10+00)
106 SC1 STREAM CROSSING #1 (WHIPPLE CREEK; STA 44+34)
107 SC2 STREAM CROSSING #2 (STA 72+46)
108 SC3 STREAM CROSSING #3 (STA 91+40)
109 SC4 STREAM CROSSING #4 (STA 2+57, NE 29TH AVE)
110 I01 INTERSECTION PLAN
111 I02 INTERSECTION PLAN
112 SS1 SIGNING & STRIPING PLAN
113 SS2 SIGNING & STRIPING PLAN
114 SS3 SIGNING & STRIPING PLAN
115 SS4 SIGNING & STRIPING PLAN
116 NE 10TH AVE/NE 179TH ST SIGNAL PLAN
117 NE 10TH AVE/NE 179TH ST DETECTION LOGIC SCHEMATIC
118 NE 10TH AVE/NE 179TH ST SIGNAL POLE/SYSTEM DETAILS
119 NE 29TH AVE/NE 179TH ST SIGNAL PLAN
120 NE 29TH AVE/NE 179TH ST DETECTION LOGIC SCHEMATIC
121 NE 29TH AVE/NE 179TH ST SIGNAL POLE/SYSTEM DETAILS
122 NE 50TH AVE/NE 179TH ST SIGNAL PLAN
121 NE 50TH AVE/NE 179TH ST DETECTION LOGIC SCHEMATIC
122 NE 50TH AVE/NE 179TH ST SIGNAL POLE/SYSTEM DETAILS

MICHAEL M. EMRICK
STATE OF WASHINGTON
29030
REGISTERED PROFESSIONAL ENGINEER
EXPIRES:MAY 26, 2005

JOHN MILNE
STATE OF WASHINGTON
31148
REGISTERED PROFESSIONAL ENGINEER
EXPIRES:JULY 7, 2005

COMMISSIONERS:

CRAIG A. PRIDEMORE, Chair
BETTY SUE MORRIS, Commissioner
JUDIE STANTON, Commissioner

CLARK COUNTY
WASHINGTON
proud past, promising future

90% PLANS

DEPARTMENT OF
PUBLIC WORKS

PRELIMINARY

Quality Assurance	Project Manager	Public Works Director/ County Engineer
Greg Shafer, P.E. DATE:	Linda Small DATE:	Peter Capell, P.E. DATE:

ENG #2003–XXXXX

CLARK COUNTY
WASHINGTON
proud past, promising future

Recommended for Approval

Grading _____ Erosion _____

Storm Water Plan _____

Development Review Manager Date

DESIGN AND ENGINEERING DIVISION- DESIGN SECTION

N:\CIP\PROJECTS\381122-NE179th-East\DESIGN\Dwg\179thECOV.dwg, 12/19/2003 3:15:35 PM, kerlinr

SUMMARY OF QUANTITIES

109.07	MOBILIZATION	L.S.	1
109.10	MINOR CHANGE	CALC.	1
110.00	TRAFFIC CONTROL LABOR	HOUR	4000
110.10	TRAFFIC CONTROL SUPERVISOR	HOUR	720
110.30	TEMPORARY TRAFFIC CONTROL DEVICES	L.S.	1
110.40	CONSTRUCTION SIGNS CLASS "A"	S.F.	650
201.00	CLEARING AND GRUBBING	ACRE	6.7
201.20	ROADSIDE CLEANUP	EST.	1
201.31	CREEK BED RESTORATION	L.S.	2
202.00	REMOVAL OF STRUCTURES AND OBSTRUCTION	L.S.	1
203.10	ROADWAY EXCAVATION (INCL. HAUL)	C.Y.	73800
203.20	EMBANKMENT COMPACTION	C.Y.	117000
203.34	COMMON BORROW (INCL. HAUL)	C.Y.	50000
203.50	SAWCUT EXISTING (ASPHALT) PAVEMENT	L.F.	300
203.51	SAWCUT EXISTING CONCRETE	L.F.	0
207.00	WATER	MGAL	1500
212.11	SOIL LINER	S.Y.	12300
404.50	CRUSHED SURFACING BASE COURSE	TON	93820
504.02	ASPHALT CONCRETE PAVEMENT CL. A	TON	12000
504.03	ASPHALT CONCRETE PAVEMENT CL. E	TON	23280
504.14	PLANING BITUMINOUS PAVEMENT	S.Y.	0
505.00	CEMENT CONCRETE APPROACH, 3-DAY	S.Y.	1084
612.31	SOUND WALL	S.F.	10500
612.41	GEOGRID SOIL REINFORCEMENT FABRIC (FOR WALL)	S.F.	0
612.51	MODULAR BLOCK RET. WALL	S.F.	65000
701.00	TRENCH SAFETY SYSTEM	L.F.	7800
704.10	STORM SEWER PIPE, 10 IN. DIAM.	L.F.	1670
704.12	STORM SEWER PIPE, 12 IN. DIAM.	L.F.	3900
704.18	STORM SEWER PIPE, 18 IN. DIAM.	L.F.	1650
704.24	STORM SEWER PIPE, 24 IN. DIAM.	L.F.	2040
704.30	STORM SEWER PIPE, 30 IN. DIAM.	L.F.	0
704.36	STORM SEWER PIPE, 36 IN. DIAM.	L.F.	0
	11'-7" CM PIPE ARCH	L.F.	520
705.10	MANHOLE 48 IN. DIAM. TYPE 1	EACH	24
705.3	MANHOLE 60 IN. DIAM. TYPE 1	EACH	4
705.51	MODIFIED RISER OUTLET	EACH	4
705.60	PRECAST CONCRETE DRYWELL	EACH	0
705.62	CONCRETE CURB INLET	EACH	0
705.63	CONCRETE COMBINATION CURB INLET	EACH	54
705.65	CONCRETE DITCH INLET	EACH	4
705.70	AREA DRAIN	EACH	0
705.80	ADJUST MANHOLE/ CATCH BASIN/ INLET/ DRYWELL METHOD 1	EACH	12
706.01	STANDARD PRECAST STORMFILTER UNIT	EACH	0
708.00	PLUGGING EXISTING PIPE	EACH	0
711.00	ADJUST WATER/GAS VALVE RIM, COVER & FRAME	EACH	25
801.05	STORMWATER FACILITY EXCAVATION (INCL HAUL)	C.Y.	17500
801.21	EROSION CONTROL SEEDING AND MULCHING	ACRE	6.7
801.21	EROSION CONTROL BLANKET	S.Y.	0
801.35	SILT FENCE	L.F.	10750
801.40	STABILIZED CONSTRUCTION ENTRANCE	EACH	2
801.41	TIRE WASH	EACH	2
801.50	INLET PROTECTION	EACH	54
801.53	EROSION CONTROL REINSPECTION FEE	EACH	1
801.56	ESC LEAD	HOUR	240
801.57	SPILL PREVENTION PLAN	L.S.	1
802.02	TOPSOIL TYPE B	C.Y.	2050
	COMPOST AMENDED TOPSOIL	C.Y.	7200
802.05	BARK CHIP MULCH	C.Y.	2400
802.09	ENVIRONMENTAL RESTORATION	L.S.	0
802.24	PSIPE - 1-3/4 IN. CALIPER TREES (Acer platanoides "Crimson Sentry")	EACH	350
802.25	PSIPE - 1-3/4 IN. CALIPER TREES (Prunus)	EACH	0
802.40	PSIPE - SHRUB, EVERGREEN, 1 GAL. (Lavandul angustifolia)	EACH	2100
802.45	PSIPE - SHRUB, EVERGREEN, 2 GAL. (Viburnum davidii)	EACH	1600
802.51	PSIPE - SHRUB, DECIDUOUS, 2 GAL. (Spirea japonica "Goldflame")	EACH	1600
802.63	PSIPE - GROUNDCOVER, 1 GAL (Arctostaphylos uva-ursi)	EACH	7200
802.63	PSIPE - GROUNDCOVER, 1 GAL (Cottoneaster dammeri "Coral Beauty")	EACH	0
802.91	STORMWATER FACILITY SEEDING AND MULCHING	ACRE	3.0
802.95	TURF REINFORCEMENT	S.Y.	0.0
804.00	CEMENT CONC. BARRIER CURB	L.F.	18200
804.01	CEMENT CONC. BARRIER CURB AND GUTTER	L.F.	20800
807.10	TYPE C PRECAST TRAFFIC CURB	L.F.	955
804.20	EXTRUDED CURB, TYPE 1	L.F.	0
811.00	BEAM GUARDRAIL TYPE 1	L.F.	4100
811.13	BEAM GUARDRAIL FLARED TERMINAL	EACH	20
811.17	BEAM GUARDRAIL TRANSITION SECTION TYPE E	EACH	0
812.10	COATED CHAIN LINK FENCE - TYPE 1	L.F.	4400
812.23	DOUBLE 20 FT. COATED CHAIN LINK GATE	EACH	4
812.53	FENCE REMOVAL	L.F.	2500
814.01	CEMENT CONCRETE SIDEWALK	S.Y.	12800
815.30	HAND PLACED RIP RAP	C.Y.	10
818.00	MAILBOX SUPPORT, TYPE 1	EACH	35
818.20	MAILBOX SUPPORT, TYPE 2	EACH	2
820.30	TRAFFIC SIGNAL SYSTEM	L.S.	1

LEGEND

- ROW LINE
- NEW EDGE OF PAVEMENT
- NEW CURB LINE
- NEW CENTER LINE
- NEW FENCE LINE
- NEW STORM DRAIN OR CULVERT
- NEW FILL LIMITS
- NEW CUT LIMITS
- SAWCUT LINE
- PERMANENT SLOPE EASEMENT
- NEW SILT FENCE
- EXISTING EDGE OF PAVEMENT
- EXISTING CURB LINE
- EXISTING CENTER LINE
- EXISTING FENCE LINE
- EXISTING TELEPHONE LINE
- EXISTING WATER LINE
- EXISTING UNDERGROUND ELECTRIC
- EXISTING SANITARY SEWER LINE
- EXISTING STORM DRAINAGE
- EXISTING GAS LINE
- EXISTING CULVERT
- EXISTING DITCH CENTER LINE
- EXISTING GUARDRAIL

SYMBOLS

- NEW CATCH BASIN (CB)
- NEW MANHOLE (MH)
- NEW CURB INLET (CI)
- NEW COMBINATION CURB INLET (CCI)
- NEW MAIL BOX
- NEW HANDICAP RAMP
- CURVE TABLE
- EXISTING TRANSFORMER
- EXISTING ELEC TOWER
- EXISTING SANITARY SEWER MH
- EXISTING FIRE HYDRANT
- EXISTING CLEAN OUT
- EXISTING GAS VALVE
- EXISTING WATER METER
- EXISTING WATER VALVE
- EXISTING SIGNAL POLE
- EXISTING TELEPHONE VAULT
- EXISTING TELEVISION BOX
- EXISTING WELL
- EXISTING BRUSH LINE
- EXISTING HEDGE
- EXISTING CURB INLET (CI)
- EXISTING CATCH BASIN (CB)
- EXISTING STORM MH
- EXISTING MISC MH
- EXISTING SHRUB
- EXISTING CONIFEROUS TREE
- EXISTING DECIDUOUS TREE
- EXISTING SIGN
- EXISTING DECIDUOUS TREE
- EXISTING J BOX
- EXISTING TELEPHONE MANHOLE
- EXISTING TELEPHONE POLE
- EXISTING LIGHT
- EXISTING GUY ANCHOR
- EXISTING POWER POLE
- EXISTING MAIL BOX
- EXISTING TELEPHONE PEDESTAL
- EXISTING SPRINKLER HEAD
- TRAVERSE POINT
- TEST HOLE

PRELIMINARY

DESIGNED	MME
DRAWN	RK
CRP	381122
HOR.	NA
VERT.	NA
DATE	12/22/03
DWG:	S01
SHEET X	OF X

CALL 48 HOURS BEFORE YOU DIG
1-800-553-4344
"It's the Law"
NORTHWEST UTILITIES NOTIFICATION CENTER

STEVEN M. EDWICK
STATE OF WASHINGTON
29030
PROFESSIONAL ENGINEER
EXPIRES MAY 26, 2005

DESIGN & ENGINEERING DIVISION
DESIGN SECTION

NE 179TH STREET (I-5 TO NE 50TH AVE)
SUMMARY OF QUANTITIES AND LEGEND

proud past, promising future
CLARK COUNTY
WASHINGTON

N:\CIP\PROJECTS\381122-NE179th-East\DESIGN\Dwg\179thESQ01.dwg, 12/16/2003 10:42:08 AM, kerlinr

① TAPERS FROM 35' TO 23'
STA 79+00 LT TO
STA 79+88 LT

② TAPERS FROM 35' TO 23'
STA 79+00 RT TO
STA 85+00 RT

③ VARIES. SEE PLAN/PROFILE SHEETS FOR SIDEWALK LOCATIONS

④ TAPERS FROM 23' TO 12'
STA 129+80 TO
STA 135+80

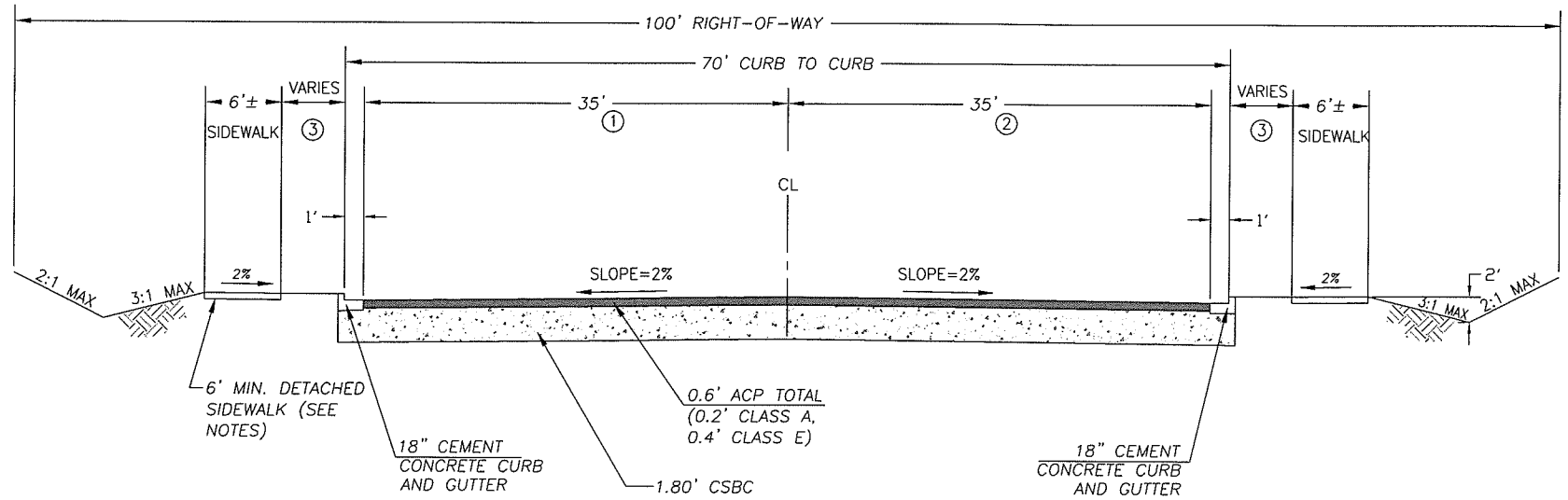

NE 179TH STREET
STA 31+97.5 TO 85+00

PRELIMINARY

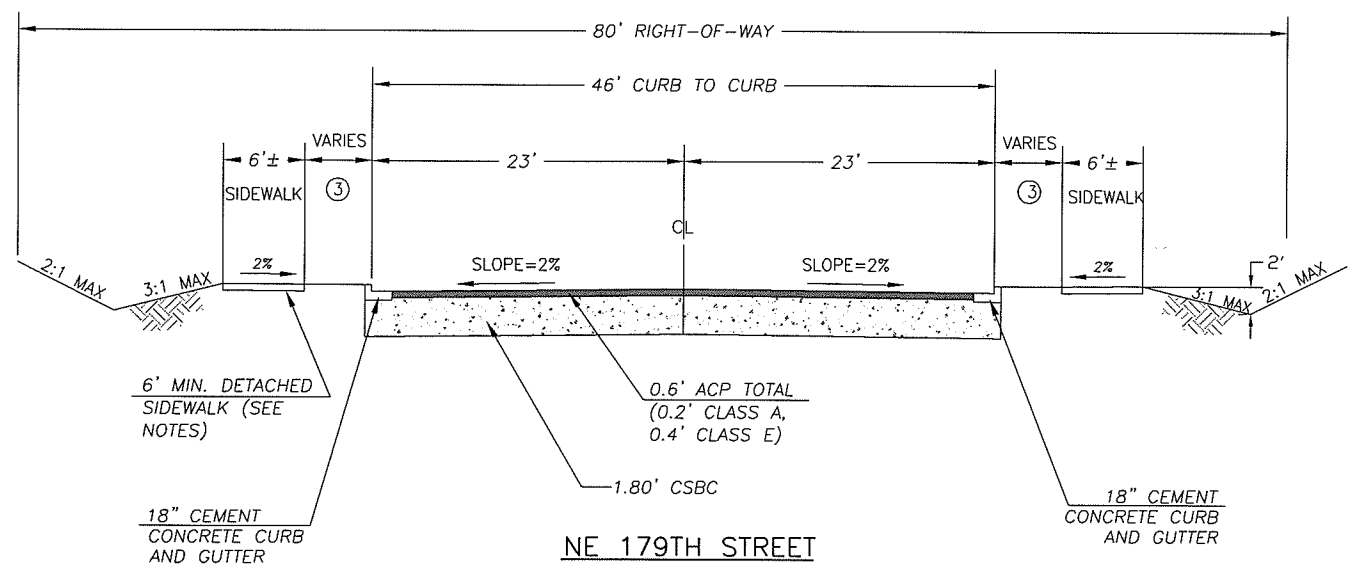

NE 179TH STREET
STA 85+00 TO 129+80

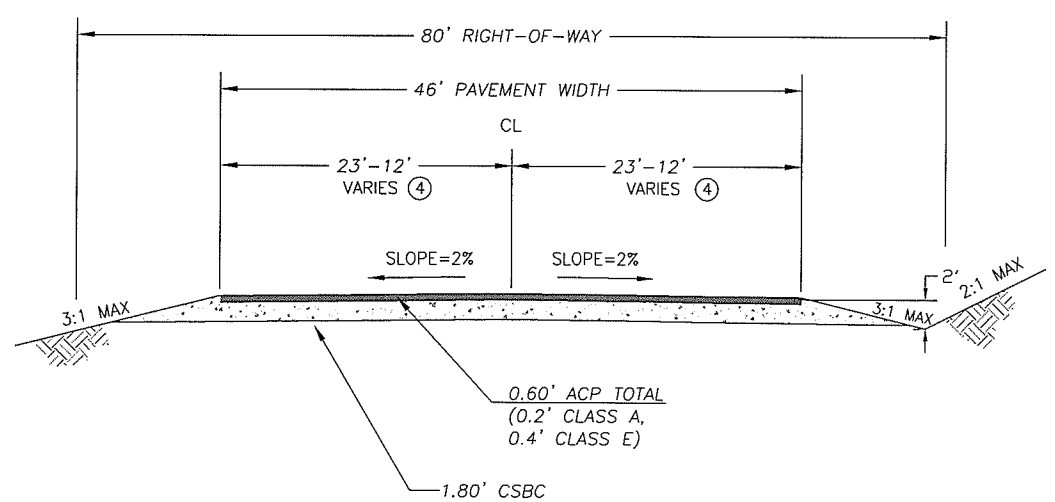

NE 179TH STREET (EAST OF NE 50TH AVE)
STA 129+80 TO 135+80

DESIGNED	MME
DRAWN	RK
CRP	381122
HOR.	NA
VERT.	NA
DATE	12/22/03
DWG:	TS1
SHEET X	OF X

CALL 48 HOURS BEFORE YOU DIG 1-800-553-4344 "It's the Law" NORTHWEST UTILITIES NOTIFICATION CENTER

MICHAEL M. EBERLE STATE OF WASHINGTON 37005 REGISTERED PROFESSIONAL ENGINEER EXPIRES JANUARY 26, 2004

DESIGN & ENGINEERING DIVISION
DESIGN SECTION

NE 179TH STREET (I-5 TO NE 50TH AVE)
TYPICAL SECTIONS

proud past, promising future
CLARK COUNTY WASHINGTON

N:\CIP\PROJECTS\381122-NE179th-East\DESIGN\Dwg\179thETS1-2.dwg, 12/16/2003 10:42:33 AM, kerlinr

① TAPERS FROM 23' TO 9.7'±
(MATCH EXISTING)
STA 0+80.36 LT TO
STA 1+55.00 LT

② TAPERS FROM 23' TO 12.2'±
(MATCH EXISTING)
STA 0+80.36 RT TO
STA 1+55.00 RT

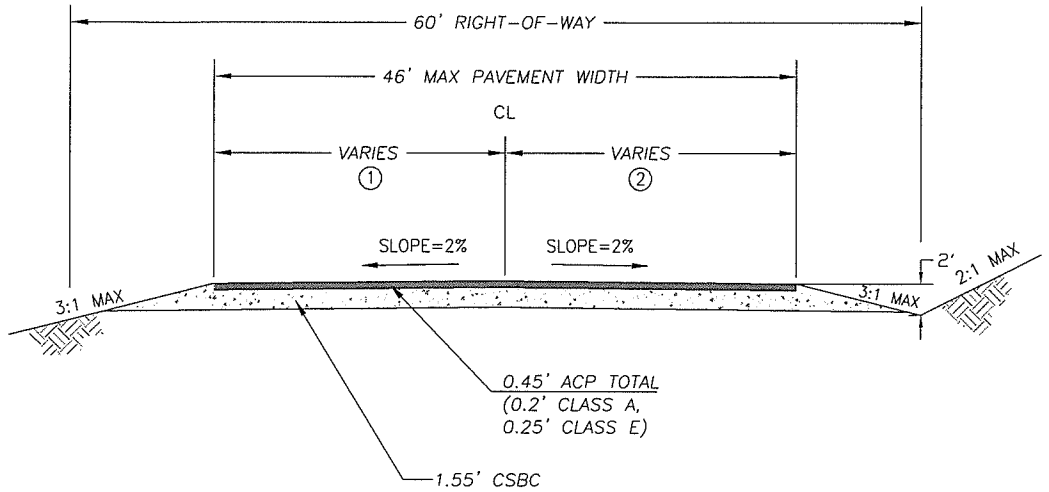

NE 29TH AVENUE (NORTH)
STA 0+00 TO 2+40

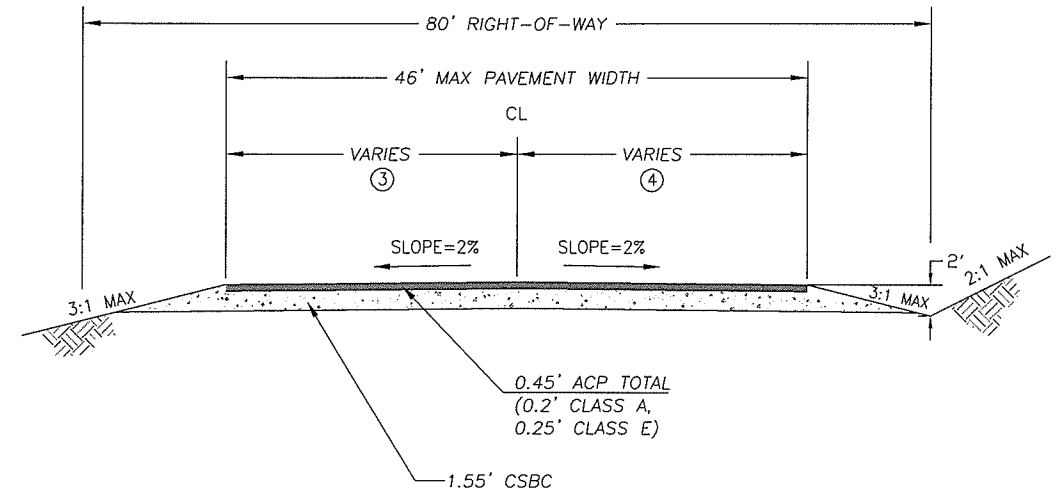

NE 50TH AVENUE (NORTH)
STA 0+00 TO XX+XX

③ TAPERS FROM 23' TO 11.2'±
(MATCH EXISTING)
STA 0+67.07 LT TO
STA 1+60.00 LT

④ TAPERS FROM 23' TO 11.0'±
(MATCH EXISTING)
STA 0+69.76 RT TO
STA 1+60.00 RT

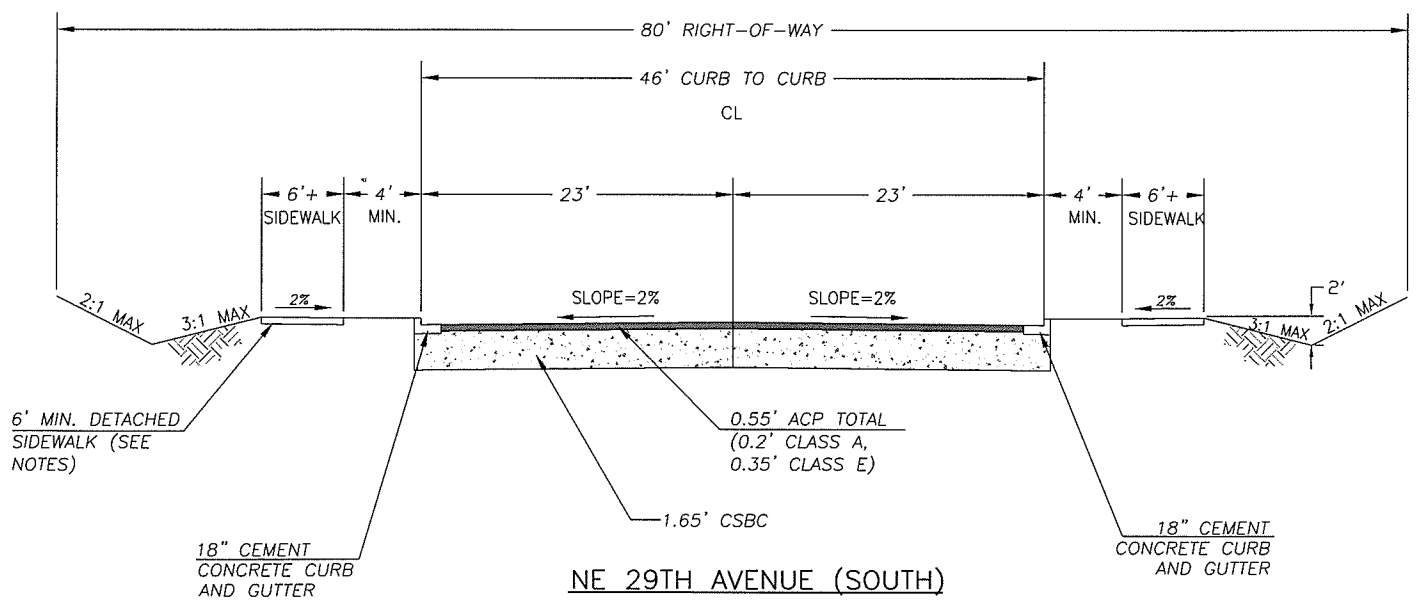

NE 29TH AVENUE (SOUTH)
STA 0+00 TO 4+31

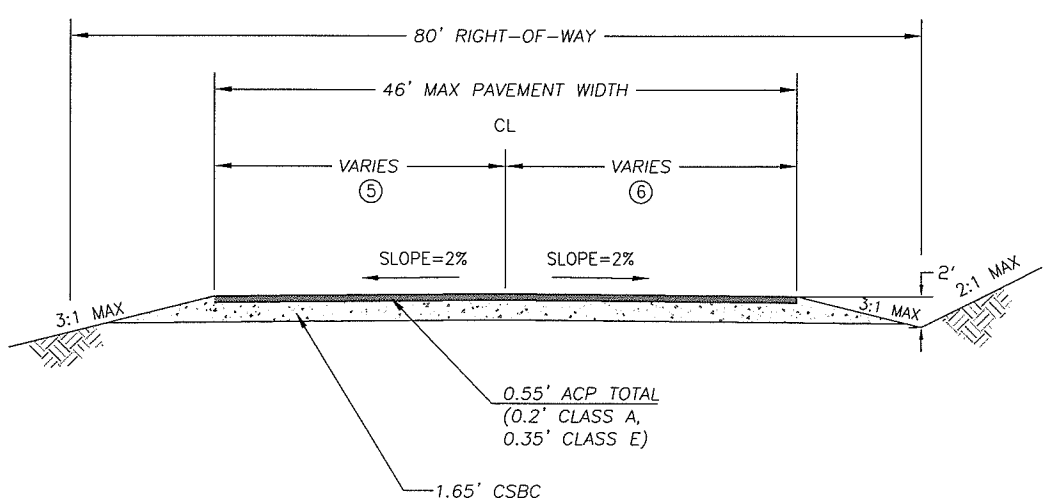

NE 50TH AVENUE (SOUTH)
STA 0+00 TO 3+40

⑤ TAPERS FROM 23' TO 7.8'±
(MATCH EXISTING)
STA 0+69+.04 RT TO
STA 2+00.00 RT

⑥ TAPERS FROM 23' TO 15.5'±
(MATCH EXISTING)
STA 0+66.19 LT TO
STA 2+00.00 LT

PRELIMINARY

DESIGNED	MME
DRAWN	RK
CRP	381122
HOR.	NA
VERT.	NA
DATE	12/22/03
DWG:	TS2
SHEET X	OF X

CALL 48 HOURS BEFORE YOU DIG
1-800-553-4344
"It's the Law"
NORTHWEST UTILITIES NOTIFICATION CENTER

STATE OF WASHINGTON
MICHAEL M. ELDRICK
27600
REGISTERED PROFESSIONAL ENGINEER
EXPIRES MAY 28, 2003

DESIGN & ENGINEERING DIVISION
DESIGN SECTION

NE 179TH STREET (I-5 TO NE 50TH AVE)
TYPICAL SECTIONS

proud past, promising future
CLARK COUNTY
WASHINGTON

N:\CIP\PROJECTS\381122-NE179th-East\DESIGN\Dwg\179thETS1-2.dwg, 12/16/2003 10:42:46 AM, kerlinr

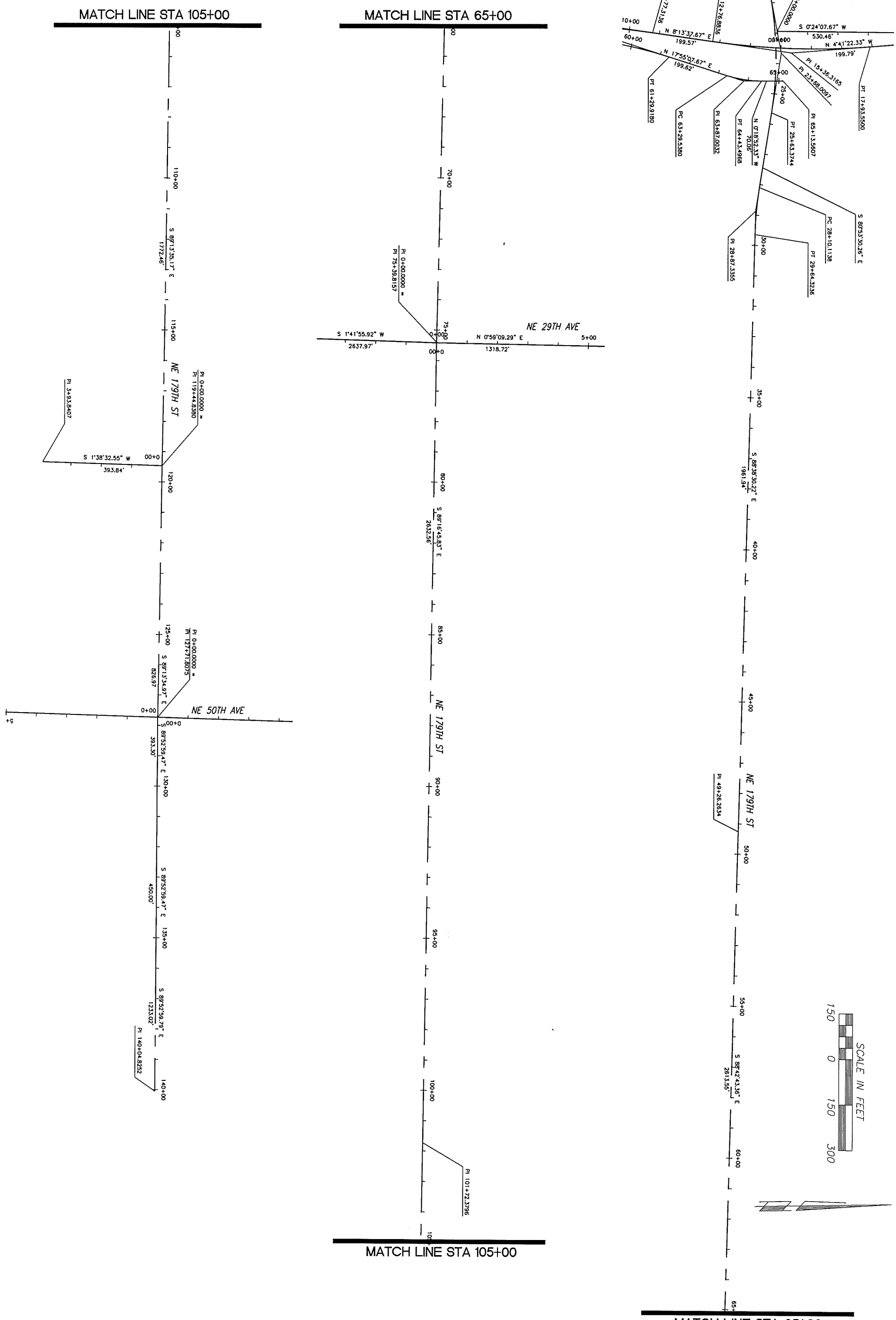

CLARK COUNTY
WASHINGTON
proud past, promising future

DESIGN & ENGINEERING DIVISION
DESIGN SECTION

NW 179TH STREET (I-5 TO NE 50TH AVE)
HORIZONTAL AND VERTICAL CONTROL

MICHAEL M. ENRICK
STATE OF WASHINGTON
29030
REGISTERED
PROFESSIONAL ENGINEER
EXPIRES: MAY 26, 2003

CALL 48 HOURS BEFORE YOU DIG
1-800-553-4344
"It's the Law"
NORTHWEST UTILITIES NOTIFICATION CENTER

DESIGNED	MME
DRAWN	RK
CRP	381122
HOR.	1"=100'
VERT.	NA
DATE	12/22/03
DWG:	HV1
SHEET X	OF X

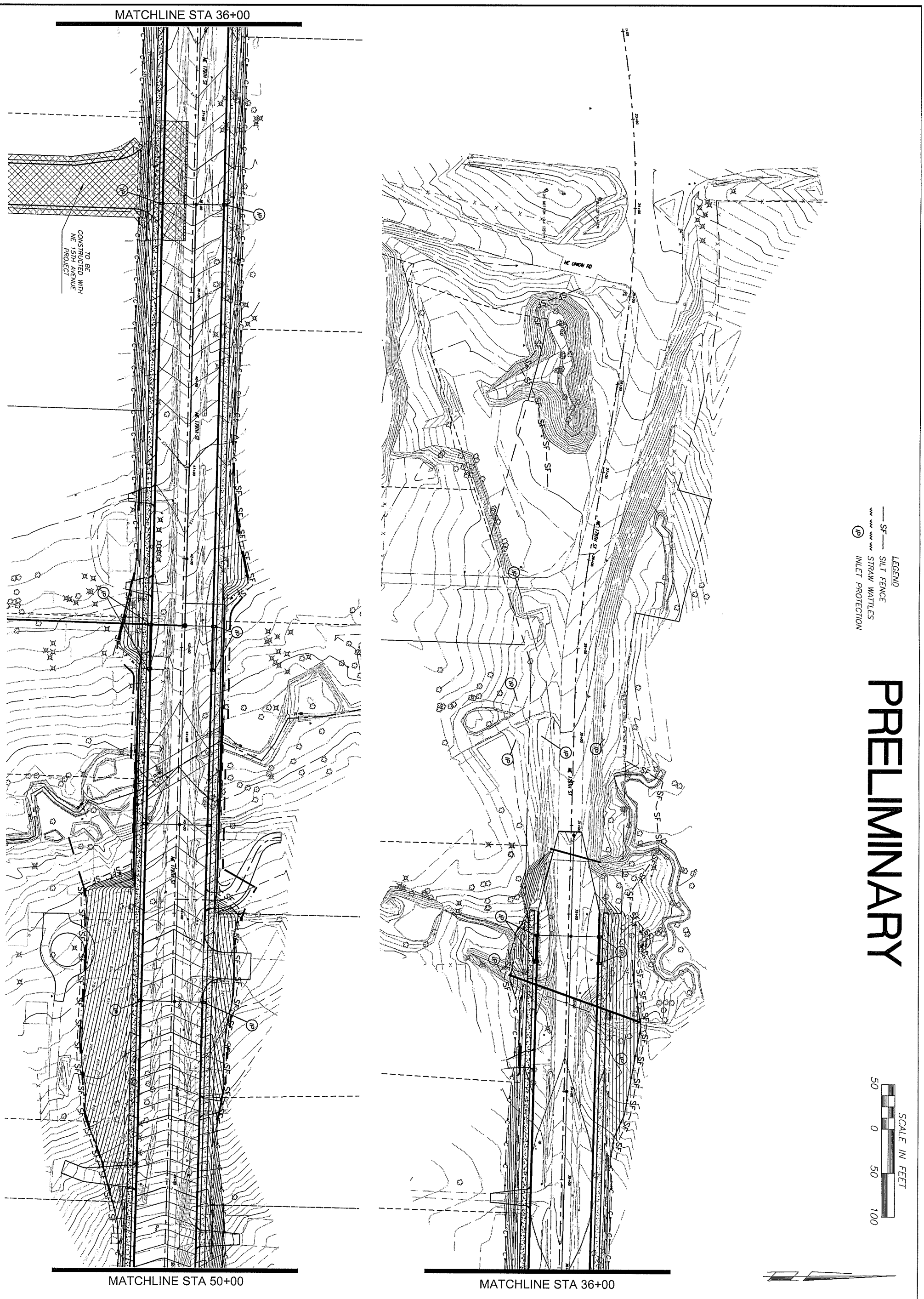

proud past, promising future

CLARK COUNTY
WASHINGTON

DESIGN & ENGINEERING DIVISION
DESIGN SECTION

NE 179TH STREET (I-5 TO NE 50TH AVE)
EROSION CONTROL PLAN

MICHAEL M. EMRICK
STATE OF WASHINGTON
29030
REGISTERED
PROFESSIONAL ENGINEER
EXPIRES: MAY 26, 2005

CALL 48 HOURS BEFORE YOU DIG
1-800-553-4344
"It's the Law"
NORTHWEST UTILITIES NOTIFICATION CENTER

DESIGNED	MME
DRAWN	RK
CRP	381122
HOR.	50
VERT.	NA
DATE	12/22/03
DWG:	EC1
SHEET X	OF X

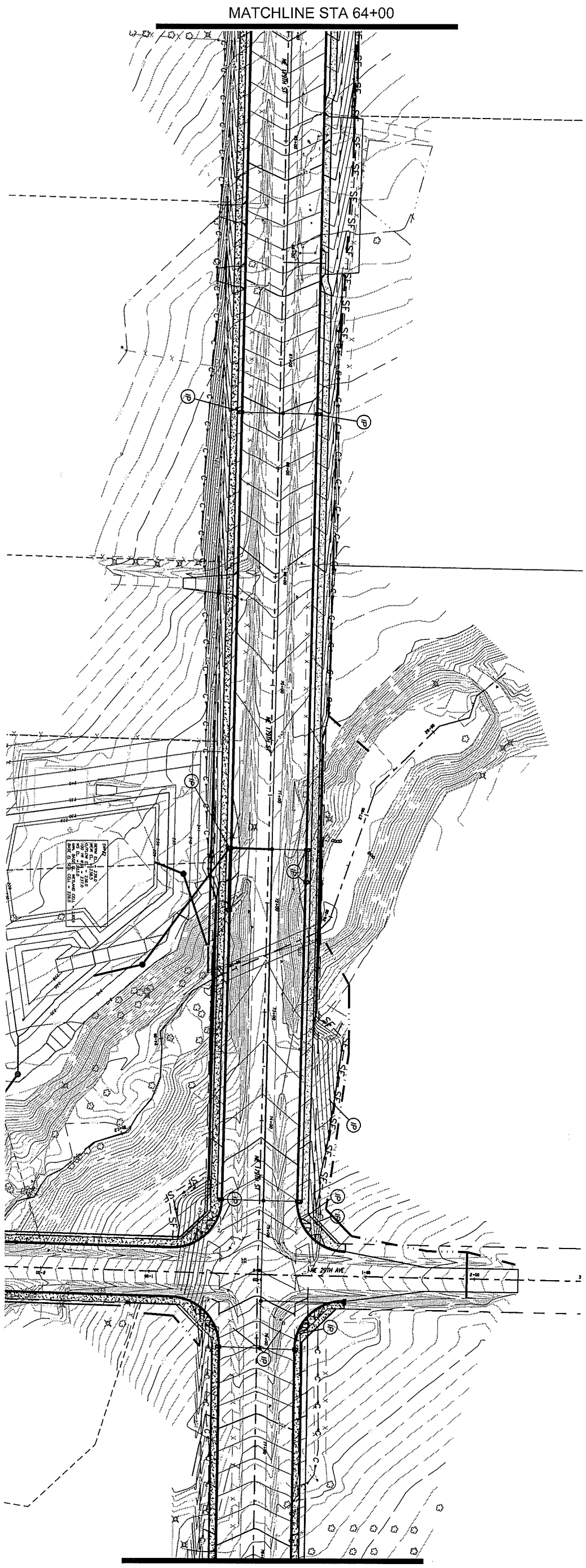

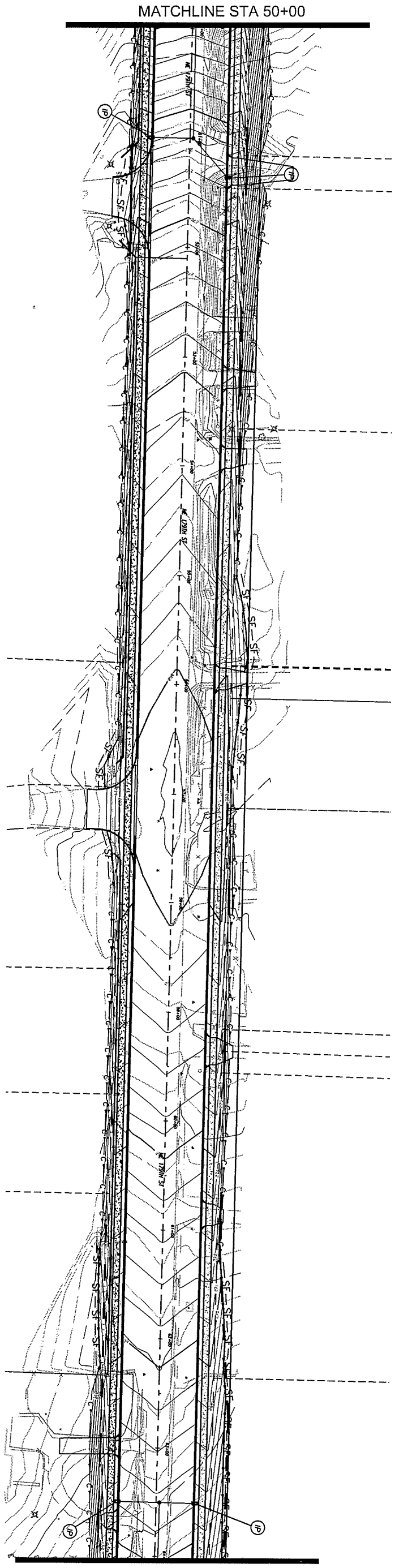

LEGEND
— SF — SILT FENCE
STRAW WATTLES
(IP) INLET PROTECTION

PRELIMINARY

SCALE IN FEET
50 0 50 100

proud past, promising future
CLARK COUNTY
WASHINGTON

DESIGN & ENGINEERING DIVISION
DESIGN SECTION

NE 179TH STREET (I-5 TO NE 50TH AVE)
EROSION CONTROL PLAN

MICHAEL M. EMRICK
STATE OF WASHINGTON
28030
REGISTERED
PROFESSIONAL ENGINEER
EXPIRES: MAY 26, 2005

CALL 48 HOURS BEFORE YOU DIG
1-800-553-4344
"It's the Law"
NORTHWEST UTILITIES NOTIFICATION CENTER

DESIGNED	MME
DRAWN	RK
CRP	381122
HOR.	50
VERT.	NA
DATE	12/22/03
DWG:	EC2
SHEET X	OF X

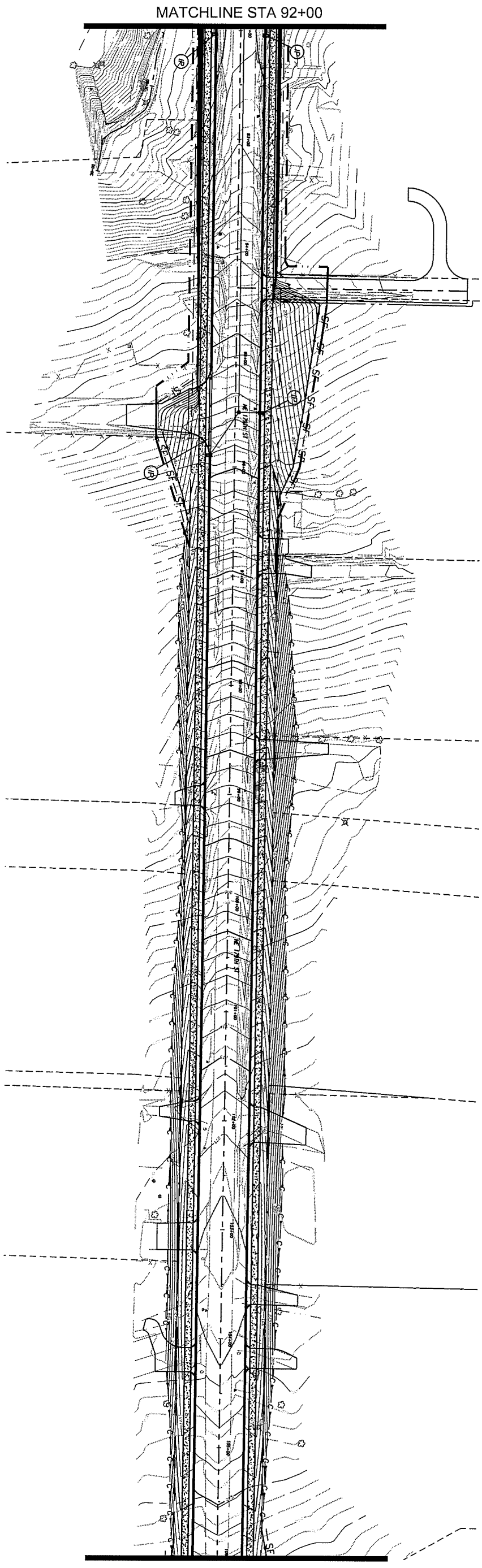

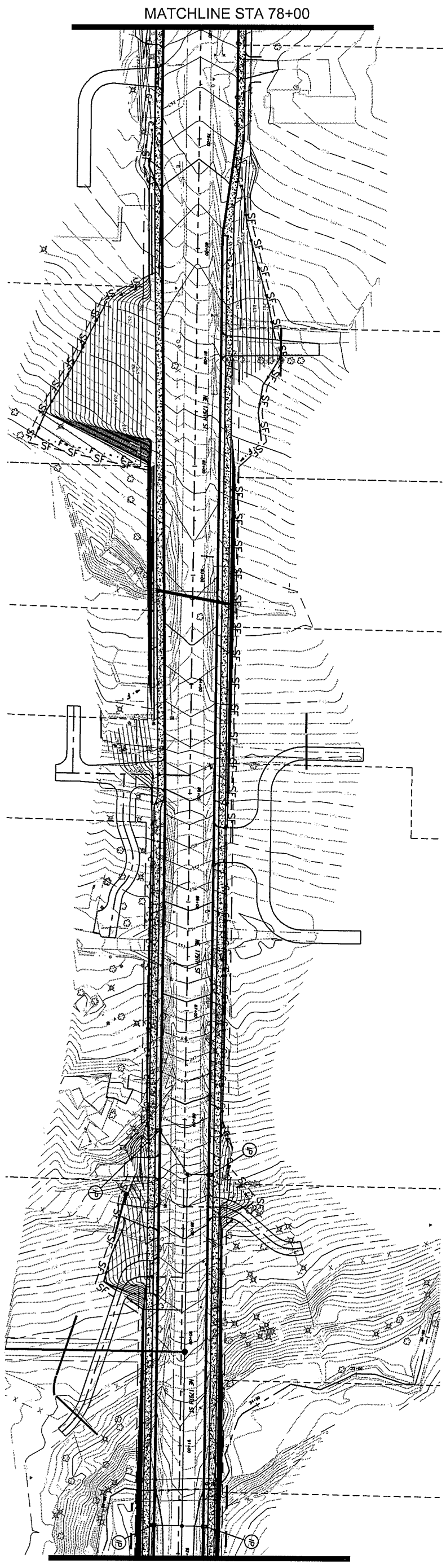

LEGEND
SF SILT FENCE
STRAW WATTLES
IP INLET PROTECTION

PRELIMINARY

SCALE IN FEET
50 0 50 100

proud past, promising future
CLARK COUNTY
WASHINGTON

DESIGN & ENGINEERING DIVISION
DESIGN SECTION

NE 179TH STREET (I-5 TO NE 50TH AVE)
EROSION CONTROL PLAN

MICHAEL M. EMRICK
STATE OF WASHINGTON
29030
REGISTERED
PROFESSIONAL ENGINEER
EXPIRES: MAY 26, 2005

CALL 48 HOURS BEFORE YOU DIG
1-800-553-4344
"It's the Law"
NORTHWEST UTILITIES NOTIFICATION CENTER

DESIGNED	MME
DRAWN	RK
CRP	381122
HOR.	50
VERT.	NA
DATE	12/22/03
DWG:	EC3
SHEET X	OF X

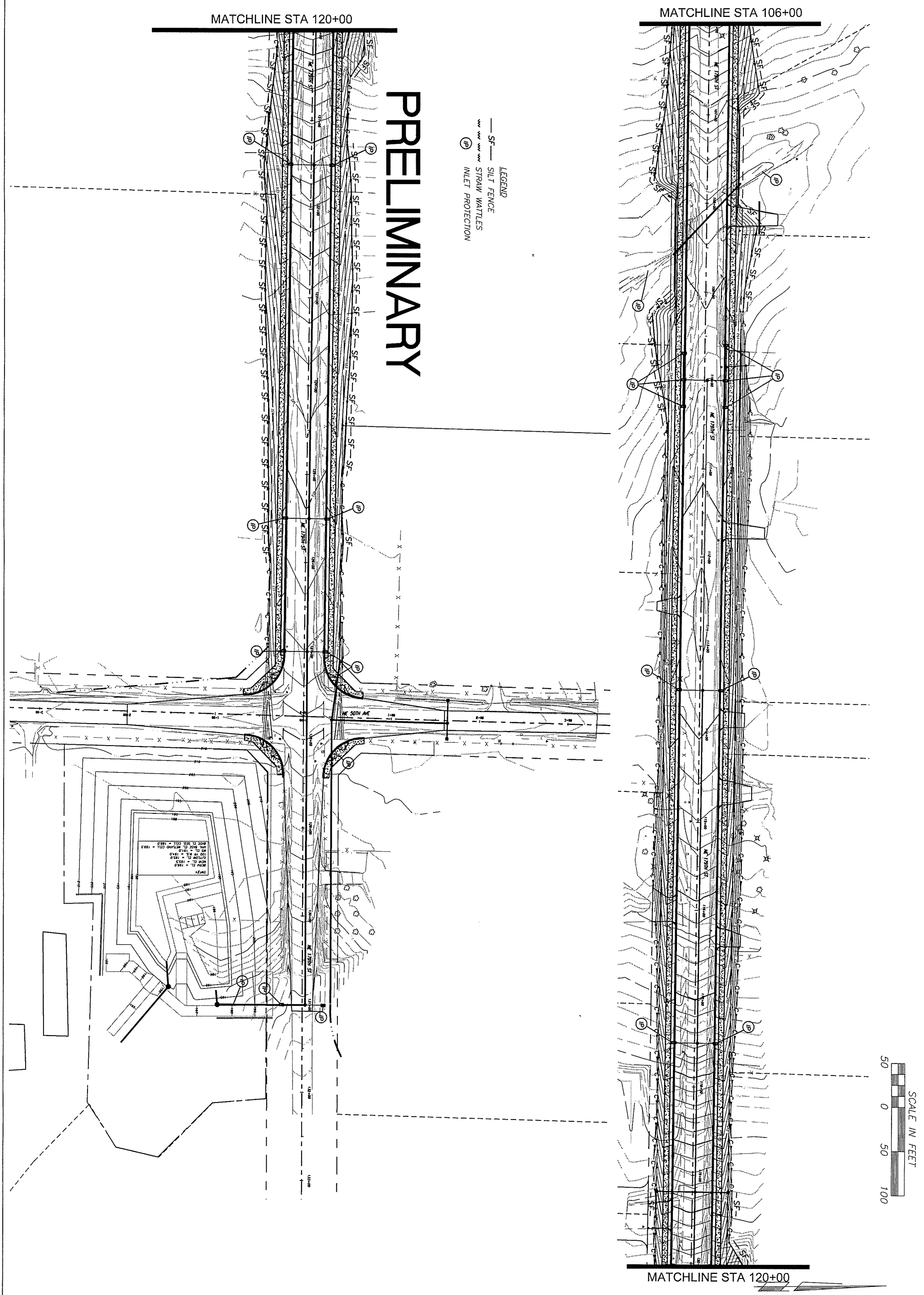

CLARK COUNTY
WASHINGTON
proud past, promising future

DESIGN & ENGINEERING DIVISION
DESIGN SECTION

NE 179TH STREET (I-5 TO NE 50TH AVE)
EROSION CONTROL PLAN

MICHAEL M. ENRICK
STATE OF WASHINGTON
29030
REGISTERED
PROFESSIONAL ENGINEER
EXPIRES: MAY 26, 2005

CALL 48 HOURS BEFORE YOU DIG
1-800-553-4344
"It's the Law"
NORTHWEST UTILITIES NOTIFICATION CENTER

DESIGNED	MME
DRAWN	RK
CRP	381122
HOR.	50
VERT.	NA
DATE	12/22/03
DWG:	EC4
SHEET X	OF X

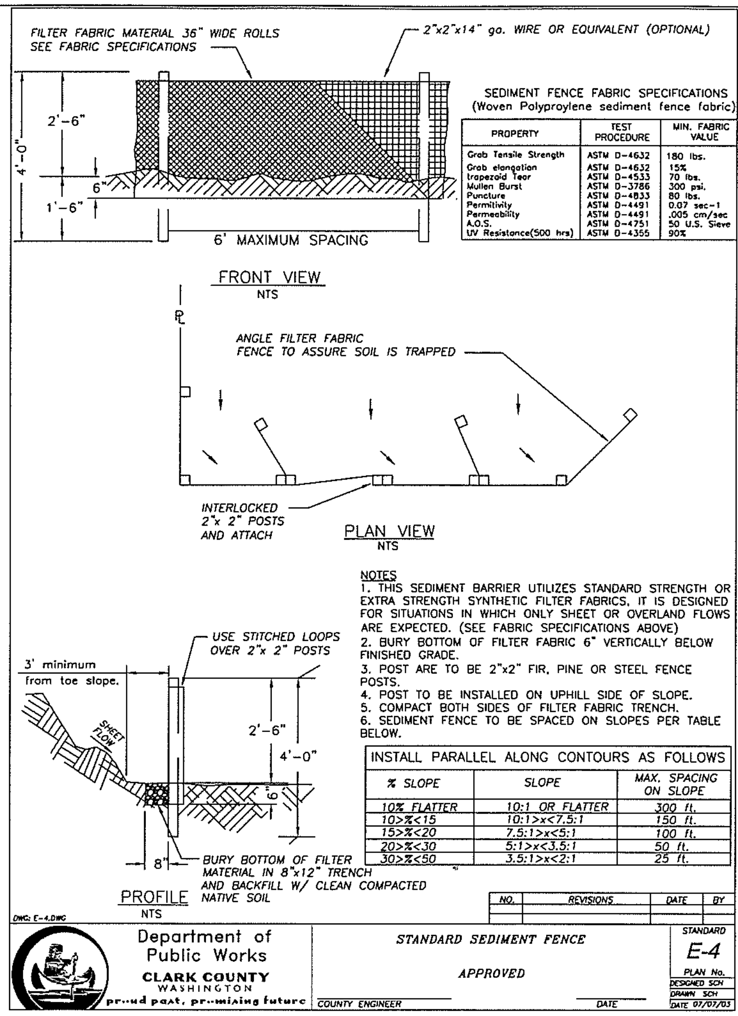

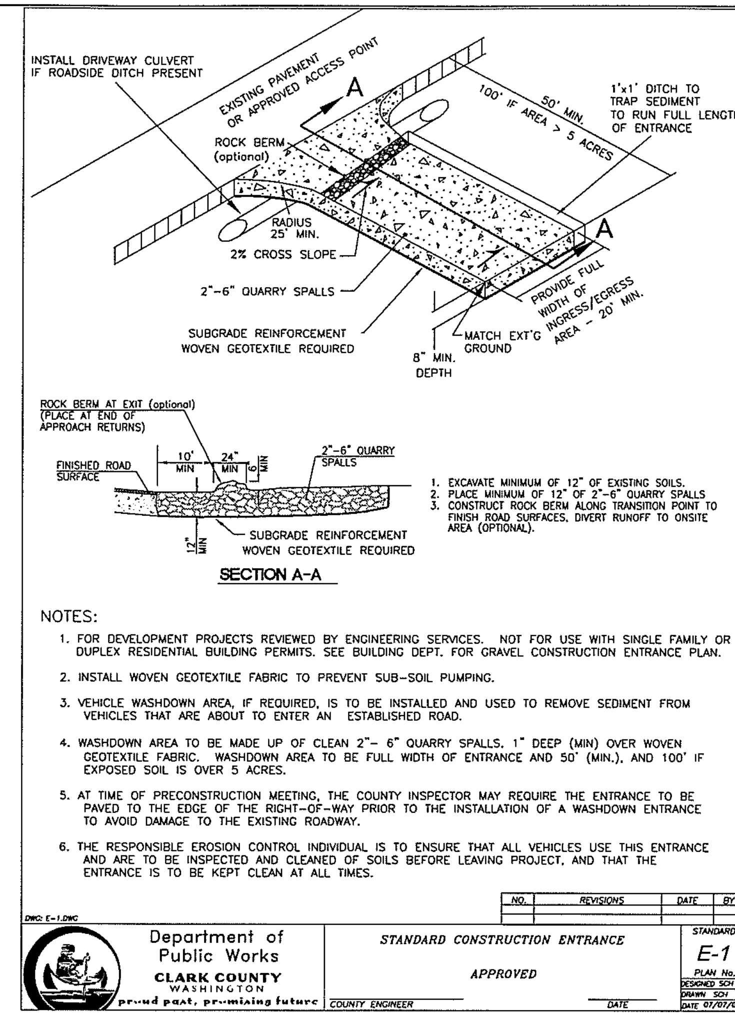

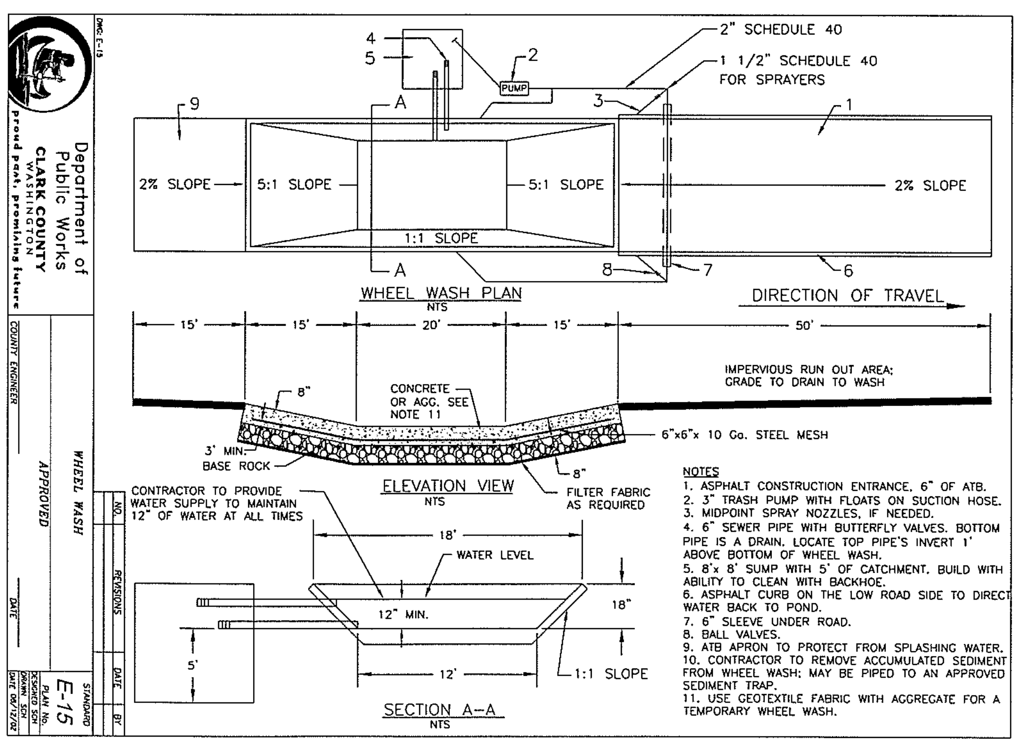

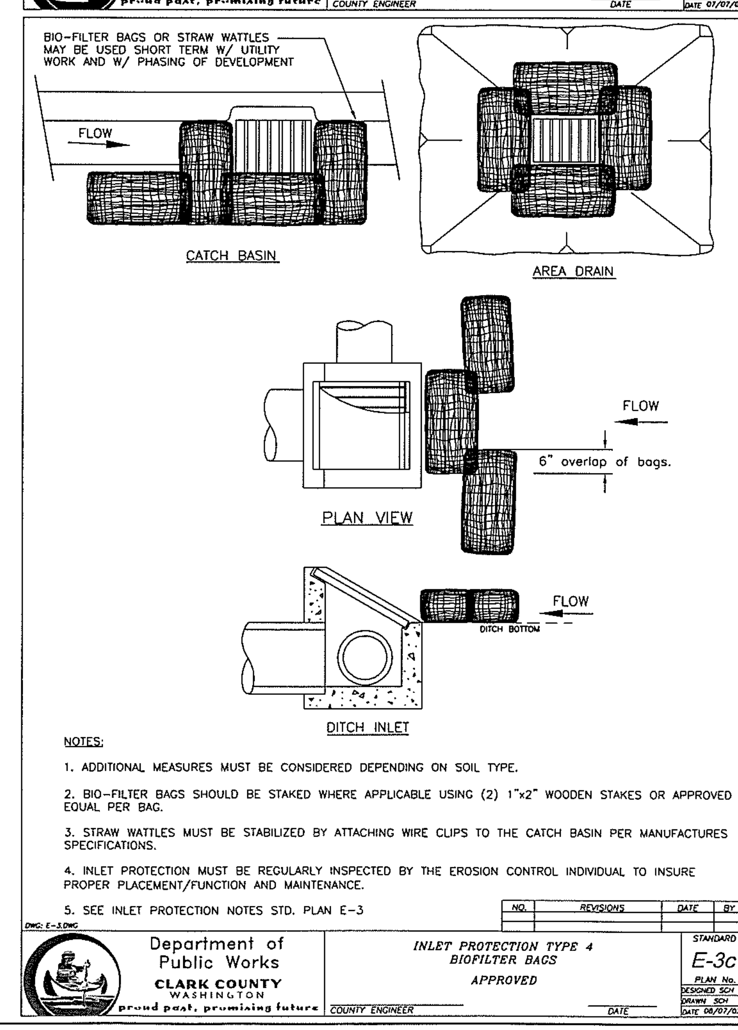

PRELIMINARY

STANDARD NOTES FOR EROSION CONTROL PLAN

1. The Contractor shall install and maintain BMP's as shown and perform all actions necessary to prevent erosion, and control sediment from leaving the construction site. Site Contractor shall comply with Clark County Code Chapter 13 .29, Article IV.

2. All erosion control measures shall be in-place and in working condition prior to disturbing and exposing any soil surfaces (i.e. silt fence, construction entrance, sedimentation barriers, sedimentation traps).

3. All erosion prevention and control BMP's shall be maintained and repaired as needed to insure continued performance of their intended function. Needed repairs shall be made as soon as practicable. They are to remain in place and operational during all phases of construction. Construction activities shall not continue or resume until repairs to erosion control facilities are made and the facilities are functional. Any sediment leaving the site or discharging to a sensitive area shall be stopped and controlled immediately. Contaminated areas shall be cleaned and restored.

4. Clearing limits and work area limits shall be delineated and marked. Do not disturb more area than needed for construction requirements.

5. All sensitive or critical areas (wetlands, steep slopes, natural waterways), and buffers shall all be clearly delineated and clearly marked, and protected from sediment deposition.

6. Sediment laden runoff shall be prevented from entering all existing storm water catch basins and inlets affected by construction.

7. No exposed, bare soils shall remain unstabilized for more than two days during the period October 1 thru April 30 or for more than seven days during the period of May 1 through September 30. All disturbed soil surfaces shall be stabilized by a suitable application of "Best Management Practices".

8. Where feasible, no more than 500 feet of trench shall be open at one time. Excavated material shall be placed on the up-hill side of trenches provided it does not conflict with safety requirements.

9. Dewatering devices shall discharge into a sediment trap or sediment pond. No discharge shall be made to a paved street or stormwater collection system without first removing sediment.

10. Cut and fill slopes shall be constructed in a manner that will minimize erosion. Erosion shall be controlled and prevented by such measures as roughening the surface, installation of interceptor ditches, terracing, covering with matting, mulch or plastic sheeting. Runoff shall be prevented from entering a slope and from undercutting the base of slopes.

11. Any soil or debris transported onto roadways and sidewalks shall be removed. Deposits shall be completely removed by shoveling and/or sweeping. Washing shall not be utilized unless specifically approved in writing by the County.

12. All permanent infiltration systems shall be isolated and protected from sediment laden runoff entering to avoid risk of reducing the ability of the systems to infiltrate. Isolation and protection shall not be removed until the drainage area tributary to the system is completely stabilized.

13. All conveyance channels, both temporary and permanent shall be stabilized to prevent erosion of the channel. Stabilization shall extend to areas at outlets and downstream reaches vulnerable to erosion resulting from flow discharging from the channel.

14. If BMP's shown are utilized but are insufficient to prevent sediment from reaching water bodies, adjacent properties, or public rights-of-way; additional BMP's shall be implemented immediately to prevent further encroachment of sediment.

15. Stabilized areas shall be provided for employee parking and storage of construction materials. Erodeable stockpiles of earthen materials, such as topsoil, silty and clayey soils; and landscape materials, shall be covered when not being incorporated in the work. Erosion control BMP's shall be utilized as necessary to prevent sediment laden runoff from leaving or sediment being transported from these areas from vehicle activity.

16. All pollutants other than sediment that occur during construction shall be handled and disposed of in a manner that does not cause contamination of storm water.

17. The Contractor shall keep an inspection log of the condition of the erosion control facilities. Erosion control facilities shall be inspected at least weekly and after each rainfall. The inspection log shall be kept at the project site at a designated location and shall be available for review by the County. An individual that has successfully completed the County's Erosion Control Certification course shall perform inspections and maintain the

18. All temporary BMP's shall be removed within 30 days after final site stabilization is achieved. Trapped sediment shall be deposited and stabilized on site. Areas disturbed resulting from removal shall be permanently stabilized.

19. Construction shall not be considered complete and acceptable until all disturbed soil surfaces have been protected from erosion with permanent landscaping, covering with impervious surfaces, restored to original undisturbed condition or permanently stabilized.

20. Vegetated stabilization and landscaping shall be fertilized, watered and maintained to insure that growth of vegetation is established and sustained.

21. During dry weather construction periods the contractor shall provide project-specific dust control measures that may include: Seeding, Mulching, Matting, Water, Tackifier, or Chemical Soil Stabilizers. The contractor shall maintain the dust control measures through dry weather periods until all disturbed areas have been stabilized. Immediately re-stabilize areas disturbed by contractor's operations or other activities (wind, water, vandalism, etc.).

NOTE:
SIGNIFICANT VARIATION AND DEGREE OF EROSION CONTROL EFFORT IS DICTATED BY WEATHER CONDITIONS. THE DEVELOPER AND CONTRACTOR SHOULD BE PREPARED TO PROVIDE EXTRA EROSION CONTROL PROVISIONS AND EFFORT DURING WINTER AND WET WEATHER CONDITIONS BEYOND THAT NORMALLY REQUIRED DURING SUMMER AND DRY WEATHER CONDITIONS. FINE GRAINED AND UNCONSOLIDATED SOILS ON SLOPING SITES MAY BECOME UNSTABLE WHEN SUBJECT TO EXCESSIVE MOISTURE.

Notes:
1. Asphalt construction entrance 6 in. asphalt treated base (ATB).
2. 3-inch trash pump with floats on the suction hose.
3. Midpoint spray nozzles, if needed.
4. 6-inch sewer pipe with butterfly valves. Bottom one is a drain. Locate top pipe's invert 1 foot above bottom of wheel wash.
5. 8 foot x 8 foot sump with 5 feet of catch. Build so can be cleaned with trackhoe.
6. Asphalt curb on the low road side to direct water back to pond.
7. 6-inch sleeve under road.
8. Ball valves.
9. 15 foot. ATB apron to protect ground from splashing water.

DESIGN & ENGINEERING DIVISION
DESIGN SECTION

NE 179TH STREET (I-5 TO NE 50TH AVE)
EROSION CONTROL DETAILS

CLARK COUNTY WASHINGTON
proud past, promising future

CALL 48 HOURS BEFORE YOU DIG
1-800-553-4344
"It's the Law"
NORTHWEST UTILITIES NOTIFICATION CENTER

MICHAEL M. EMRICK, STATE OF WASHINGTON, 29030 REGISTERED PROFESSIONAL ENGINEER
EXPIRES MAY 26, 2003

DESIGNED	MME
DRAWN	RK
CRP	381122
HOR.	NA
VERT.	NA
DATE	12/22/03
DWG:	EC5
SHEET X	OF X

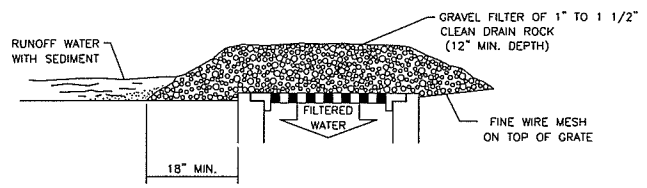

GRAVEL & WIRE MESH

NOT TO BE USED IN TRAVELED WAY IF
IT MAY RESULT IN A TRAFFIC HAZARD

INLET PROTECTION NOTES:

1. INLET PROTECTION IS INTENDED TO PREVENT COARSE SEDIMENT FROM ENTERING STORM DRAINAGE SYSTEMS BY FILTERING RUNOFF AND RETAINING SEDIMENT BEFORE IT REACHES A DRAINAGE OR STORM SEWER SYSTEM.

2. PLACE INLET PROTECTION IN AREAS WHERE WATER CAN POND, AND WHERE PONDING WILL NOT HAVE ADVERSE IMPACTS.

3. INLET PROTECTION MUST ALLOW FOR OVERFLOW IN A SEVERE STORM EVENT.

4. INLET PROTECTION TYPES INCLUDE: TYPE 1 – GRAVEL AND WIRE MESH
TYPE 2 – MASONRY AND ROCK
TYPE 3 – SEDIMENT FENCE
TYPE 4 – BIOFILTER BAGS
TYPE 5 – CATCH BASIN INSERT

5. INSPECT ONCE PER WEEK ON ACTIVE SITES, ONCE EVERY TWO WEEKS ON INACTIVE SITES, AND WITHIN 24 HOURS FOLLOWING A 0.5 INCH RAIN EVENT.

6. CLEAN INLET PROTECTION DURING AND AFTER EACH SIGNIFICANT STORM AND REMOVE SEDIMENT FROM BEHIND STRUCTURE AFTER EVERY STORM.

7. IF ROCK BECOMES CLOGGED WITH SEDIMENT, IT MUST BE CAREFULLY REMOVED FROM THE INLET AND EITHER CLEANED OR REPLACED.

8. ASSESS THE IMPACT OF ALLOWING WATER TO POND AT THE INLET AND PROVIDE AN OVERFLOW WEIR OR SOME OTHER TYPE OF RELIEF AS NEEDED.

9. CONSIDER THE EFFECT OF PLACING OBSTRUCTIONS AT INLETS ON GRADE MAY HAVE ON THEIR EFFICIENCY.

10. USE MECHANICAL MEANS TO REMOVE SEDIMENT DEPOSITS (SHOVEL, BROOM, SWEEPER/VACTOR UNIT).

11. REMOVE SEDIMENT ACCUMULATED ON OR AROUND THE PROTECTION AS NEEDED TO MAINTAIN INTENDED FUNCTION.

12. REPAIR OR REPLACE MATERIALS AS NEEDED TO ENSURE PROPER FUNCTION.

NO.	REVISIONS	DATE	BY

DWG: E-3.DWG

Department of Public Works
CLARK COUNTY
WASHINGTON
proud past, promising future

INLET PROTECTION TYPE 1
GRAVEL AND WIRE MESH

APPROVED

COUNTY ENGINEER DATE

STANDARD E-3
PLAN No.
DESIGNED SCH
DRAWN SCH
DATE 08/01/02

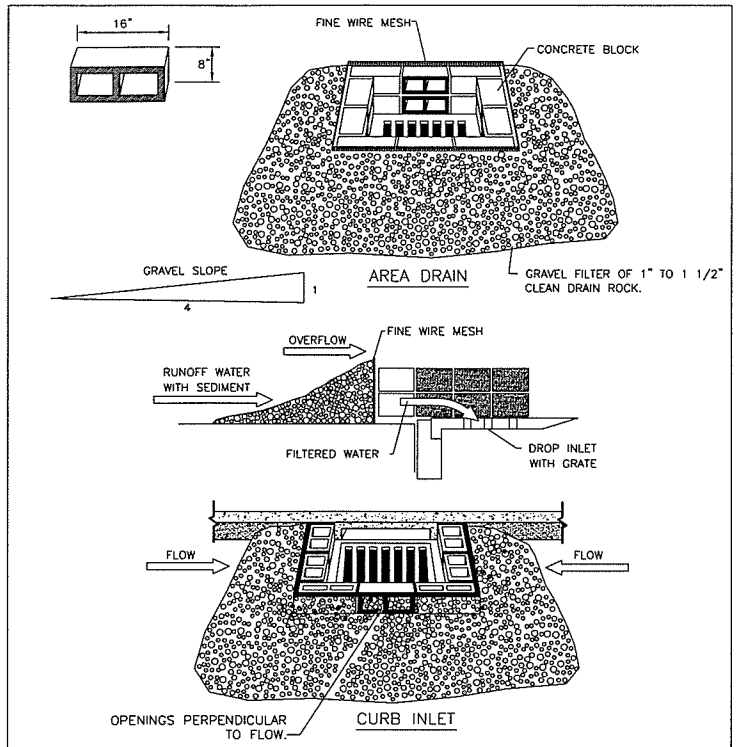

BLOCK AND GRAVEL INLET BARRIERS

NOT TO BE USED IN TRAVELED WAY IF
IT MAY RESULT IN A TRAFFIC HAZARD

NOTE:
1. BLOCKS SHALL BE STACKED WITH THE OPENINGS ON THE TOP AND BOTTOM EXCEPT FOR THE CENTER BLOCKS. CENTER BLOCKS WILL HAVE OPENINGS PERPENDICULAR TO FLOW.
1. SEE INLET PROTECTION NOTES STD. PLAN E-3

NO.	REVISIONS	DATE	BY

DWG: E-3.DWG

Department of Public Works
CLARK COUNTY
WASHINGTON
proud past, promising future

INLET PROTECTION TYPE 2
MASONRY AND ROCK

APPROVED

COUNTY ENGINEER DATE

STANDARD E-3a
PLAN No.
DESIGNED SCH
DRAWN SCH
DATE 08/01/02

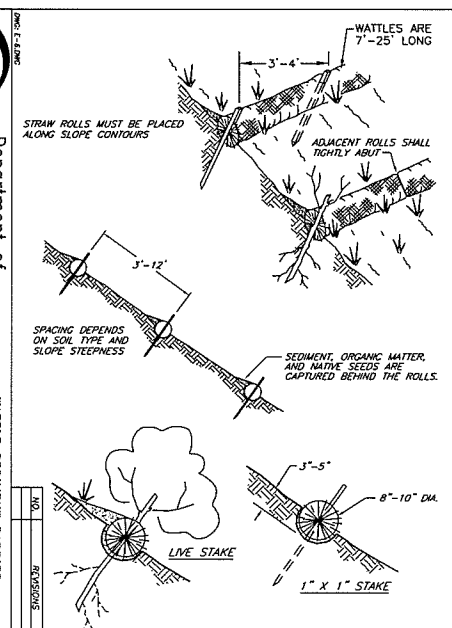

WATTLE DETAIL

NTS

WATTLES STAKED ALONG THE CONTOUR OF NEWLY CONSTRUCTED OR DISTURBED SLOPES. CAN OFTEN BE USED TO REPLACE SEDIMENT FENCES ON STEEP SLOPES.

Construction Specifications:
Prepare the slope before the wattling procedure is started.

Shallow gullies should be smoothed as work progresses.

Dig small trenches across the slope on contour, to place rolls in. The trench should be deep enough to accommodate half the thickness of the roll. When the soil is loose and uncompacted, the trench should be deep enough to bury the roll 2/3 of its thickness because the ground will settle.

It is critical that rolls are installed perpendicular to water movement, parallel to the slope contour.

Start building trenches and install rolls from the bottom of the slope and work up.

Construct trenches at contour intervals of 3–12 feet apart depending on steepness of slope. The steeper the slope, the closer together the trenches.

Lay the roll along the trenches fitting it snugly against the soil. Make sure no gaps exist between the soil and the straw wattle.

Use a straight bar to drive holes through the wattle and into the soil for the willow or wooden stakes.

Drive the stake through prepared hole into soil. Leave only 1 or 2 inches of stake exposed above roll.

If using willow stakes refer to Live Staking BMP.

Install stakes at least every 4 feet apart through the wattle. Additional stakes may be driven on the downslope side of the trenches on highly erosive or very steep slopes.
Inspection and Maintenance:

Inspect the straw rolls and the slopes after significant storms. Make sure the rolls are in contact with the soil.

Repair any rills or gullys promptly.

Reseed or replant vegetation if necessary until the slope is stabilized.

DWG: E-6.DWG

Department of Public Works
CLARK COUNTY
WASHINGTON
proud past, promising future

WATTLE SEDIMENT BARRIER

APPROVED

COUNTY ENGINEER DATE

STANDARD E-6
PLAN No.
DESIGNED SCH
DRAWN SCH
DATE 08/06/03

NO.	REVISIONS	DATE	BY

PRELIMINARY

DESIGNED MME
DRAWN RK
CRP 381122
HOR. NA
VERT. NA
DATE 12/22/03
DWG: EC6
SHEET X OF X

CALL 48 HOURS BEFORE YOU DIG
1-800-553-4344
"It's the Law"
NORTHWEST UTILITIES NOTIFICATION CENTER

MICHAEL M. EARCK
STATE OF WASHINGTON
REGISTERED PROFESSIONAL ENGINEER
EXPIRES MAR 29, 2003

DESIGN & ENGINEERING DIVISION
DESIGN SECTION

NE 179TH STREET (I-5 TO NE 50TH AVE)
EROSION CONTROL DETAILS

proud past, promising future
CLARK COUNTY
WASHINGTON

N:\CIPPROJECTS\381122-NE179th-East\DESIGN\Dwgs\179thEEC5-6.dwg, 12/16/2003 10:48:35 AM, kerlinr

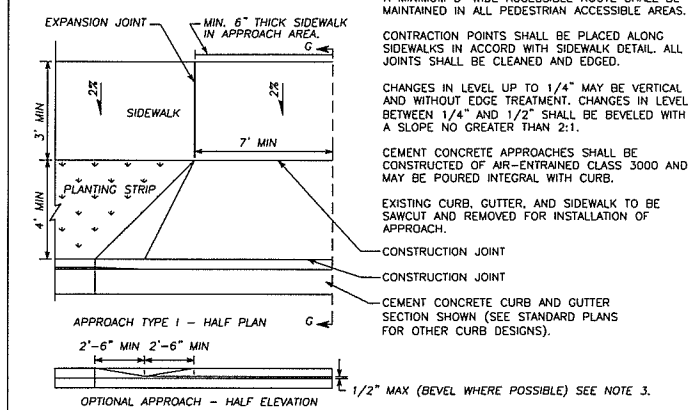

NOTES:

A MINIMUM 3' WIDE ACCESSIBLE ROUTE SHALL BE MAINTAINED IN ALL PEDESTRIAN ACCESSIBLE AREAS.

CONTRACTION POINTS SHALL BE PLACED ALONG SIDEWALKS IN ACCORD WITH SIDEWALK DETAIL. ALL JOINTS SHALL BE CLEANED AND EDGED.

CHANGES IN LEVEL UP TO 1/4" MAY BE VERTICAL AND WITHOUT EDGE TREATMENT. CHANGES IN LEVEL BETWEEN 1/4" AND 1/2" SHALL BE BEVELED WITH A SLOPE NO GREATER THAN 2:1.

CEMENT CONCRETE APPROACHES SHALL BE CONSTRUCTED OF AIR-ENTRAINED CLASS 3000 AND MAY BE POURED INTEGRAL WITH CURB.

EXISTING CURB, GUTTER, AND SIDEWALK TO BE SAWCUT AND REMOVED FOR INSTALLATION OF APPROACH.

NOTE: USE TYPE 1 APPROACH ONLY WHEN A SIDEWALK IS USED AT THE BACK OF THE APPROACH.

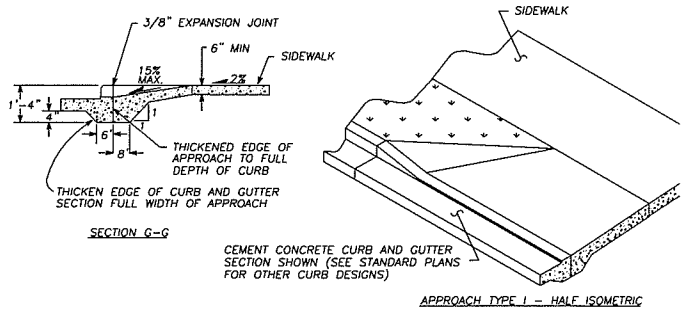

DWG: CONC30MK

NO.	REVISIONS	DATE	BY

Department of Public Works
CLARK COUNTY WASHINGTON
proud past, promising future

DETAIL – TYPE 1
CEMENT CONCRETE APPROACH
APPROVED
PETER CAPELLI
COUNTY ENGINEER
8/22/00
DATE

14

DESIGNED
DRAWN
DATE 7/24/00

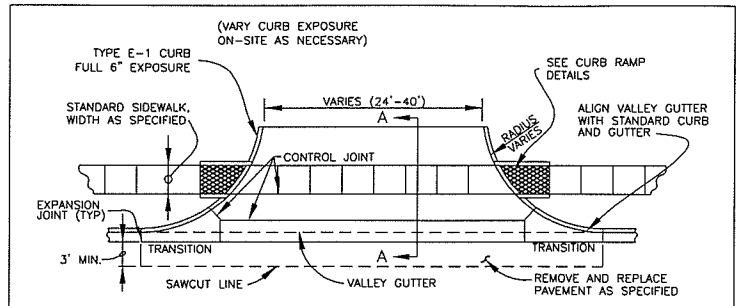

PLAN VIEW
COMMERCIAL DRIVEWAY ENTRANCE

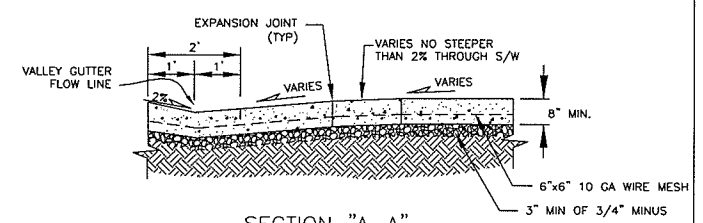

SECTION "A-A"

NOTES:

1. CONCRETE SHALL BE 3300 PSI (MIN. BREAKING STRENGTH @ 28 DAYS) WITH SLUMP BETWEEN 1 1/2" TO 3". TOTAL AIR CONTENT (% BY VOLUME OF CONCRETE) SHALL NOT BE LESS THAN 4% OR MORE THAN 7%. MEDIUM BROOM FINISH PARALLEL TO DRIVEWAY CENTERLINE.
2. ALL JOINTS SHALL BE FINISHED WITH 1/4" RADIUS EDGE UNLESS OTHERWISE NOTED.
3. DRIVEWAYS EXCEEDING 15' IN TOTAL WIDTH SHALL HAVE ADDITIONAL LONGITUDINAL JOINTS AS DIRECTED. CONTROL JOINT SPACING SHALL NOT EXCEED 15'.
4. DRIVEWAY SHALL BE CONSTRUCTED WITH REINFORCING STEEL (6x6 10 GA WIRE MESH), MIN. 3" COVER.
5. ALL EXISTING EDGES SHALL BE SAW CUT.
6. COMPACT SUBGRADE TO 95% OF MAXIMUM DENSITY.
7. EXISTING CURB SHALL BE REMOVED TO EXISTING JOINT OR SAWCUT SUCH THAT 3' MIN. OF NEW STREET SECTION IS CONSTRUCTED ADJACENT TO NEW DRIVEWAY.
8. MAXIMUM 2% CROSS SLOPE ACROSS PEDESTRIAN CROSSING.

DWG: F17.DWG

NO.	REVISIONS	DATE	BY

Department of Public Works
CLARK COUNTY WASHINGTON
proud past, promising future

MAJOR COMMERCIAL CONCRETE APPROACH
APPROVED
COUNTY ENGINEER
DATE

F17

DESIGNED SCH
DRAWN SCH
DATE 07/07/03

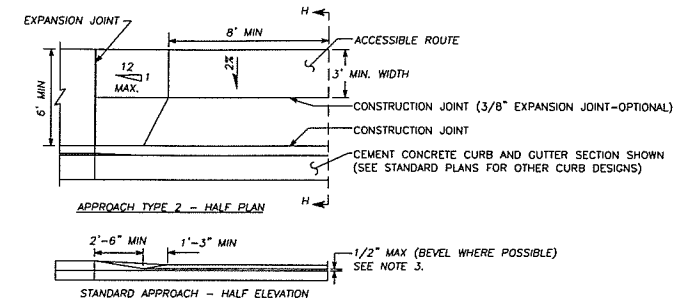

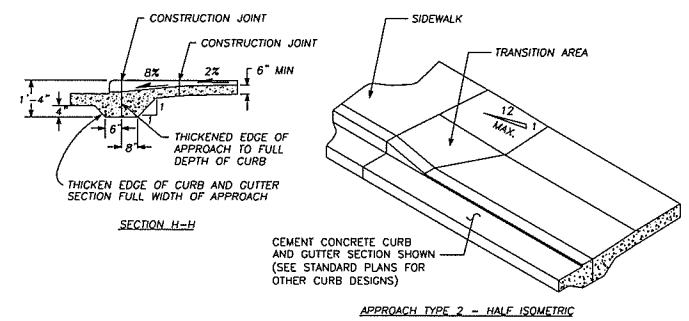

NOTES:

1. A MINIMUM 3' WIDE ACCESSIBLE ROUTE SHALL BE MAINTAINED IN ALL PEDESTRIAN ACCESSIBLE AREAS.
2. CONTRACTION JOINTS SHALL BE PLACED ALONG SIDEWALKS IN ACCORD WITH SIDEWALK DETAIL. ALL JOINTS SHALL BE CLEANED AND EDGED.
3. CHANGES IN LEVEL UP TO 1/4" MAY BE VERTICAL AND WITHOUT EDGE TREATMENT. CHANGES IN LEVEL BETWEEN 1/4" AND 1/2" SHALL BE BEVELED WITH A SLOPE NO GREATER THAN 2:1.
4. CEMENT CONCRETE APPROACHES SHALL BE CONSTRUCTED OF AIR-ENTRAINED CONCRETE CLASS 3000 AND MAY BE POURED INTEGRAL WITH CURB.
5. EXISTING CURB, GUTTER AND SIDEWALK TO BE SAWCUT AND REMOVED FOR INSTALLATION OF APPROACH.

DWG: STDAPRCH

NO.	REVISIONS	DATE	BY

Department of Public Works
CLARK COUNTY WASHINGTON
proud past, promising future

CEMENT CONCRETE APPROACH
DETAIL – TYPE 2
APPROVED
PETER CAPELLI
COUNTY ENGINEER
8/22/00
DATE

15

DESIGNED
DRAWN
DATE 7/24/00

DESIGNED	MME
DRAWN	RK
CRP	381122
HOR.	NA
VERT.	NA
DATE	12/22/03
DWG:	RD1
SHEET X	OF X

CALL 48 HOURS BEFORE YOU DIG
1-800-553-4344
"It's the Law"
NORTHWEST UTILITIES NOTIFICATION CENTER

MICHAEL W. LAPOINTE
STATE OF WASHINGTON
29030
REGISTERED PROFESSIONAL ENGINEER
EXPIRES MAY 26, 2005

DESIGN & ENGINEERING DIVISION
DESIGN SECTION

NE 179TH STREET (I-5 TO NE 50TH AVE)
ROADWAY DETAILS

PRELIMINARY

CLARK COUNTY WASHINGTON
proud past, promising future

ROADWAY SHOULDER INCLUDES LAWN AND LANDSCAPE

SHOULDER ROCK:

1. 0.50 ft. minimum depth (1 1/4" minus) crushed rock. (Clark County Approved Material).
2. Compacted to 95% of maximum density. See trench zone.
3. Rock shall extend from E.O.P. to the back of trench at approx. .05 Ft./Ft. slope.

LAWN & LANDSCAPE AREAS:

1. A County approved top soil shall be placed 0.50 Ft. in depth.
2. Area to be restored to match existing.

TRENCH ZONE:

Where the distance from E.O.T. to E.O.P. is less than or equal to the depth of the trench; these conditions shall apply:

1. Granular backfill as approved by local agency or W.S.D.O.T. specifications for granular backfill. Compacted to 95% of maximum density in the trench zone using method C compaction as per Section 2-03.3 (14).
2. Native material may be used if approved prior to construction.
3. Trench zone width -- see below.
4. Shoulder rock or landscaped sections as applicable.

CONDITIONS:

1. A copy of the permit and requirements shall be on the job site at all times.
2. The permit holder shall be responsible for all restoration and maintence of ditches, shoulders, driveways, landscaping, ect.
3. Call Clark County at 397-2446 twenty-four hours prior to commencing work.

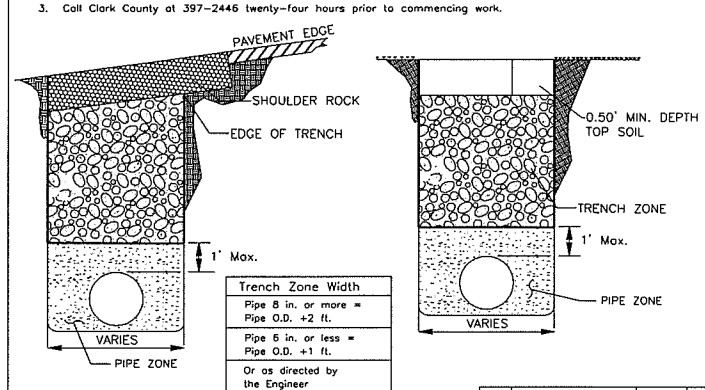

Trench Zone Width
Pipe 8 in. or more = Pipe O.D. +2 ft.
Pipe 6 in. or less = Pipe O.D. +1 ft.
Or as directed by the Engineer

DWG: TRENCH-SHOULDER

NO.	REVISIONS	DATE	BY
1	NOTE, ENG #	05/03/01	PK

Department of Public Works
CLARK COUNTY WASHINGTON
proud past, promising future

ROADWAY SHOULDER
INCLUDES LAWN & LANDSCAPE
APPROVED
PETER CAPELLI
COUNTY ENGINEER
5/4/01
DATE

U5

DESIGNED
DRAWN
DATE 5/18/01

OPEN CUT UTILITY TRENCH BACKFILL DETAIL (COLLECTOR OR ARTERIAL)

SURFACING:

1. All A.C.P. shall be saw cut to provide a straight, clean edge prior to paving.
2. The cut line shall be one continuous straight line from the outer excavation limits of manhole, valve box, etc. to manhole, valve box, etc.
3. Pave with an 0.5 ft. minimum compacted depth A.C.P., or match existing or design section, whichever is greater.
4. Lifts for A.C.P. shall be an 0.15 ft. minimum and 0.35 ft. maximum for non-surface lifts (0.25' maximum for surface lift); the temperature shall be 250 degree minimum, 350 degree maximum, compacted to 92% of the theoretical maximum.
5. All joints shall be tacked, sealed and sanded.
6. When surfacing exists on both sides of the trench, new A.C.P. will be a minimum of 40" wide.
7. Trench shall be plated until paved.
   *For longitudinal installation, full lane restoration shall be required or as directed by Clark County.
   For transverse installation refer to surfacing restoration of detail U6.

BASE COURSE:

1. 0.80 ft. minimum depth (1-1/4" minus) C.S.B.C. (W.S.D.O.T. approved material).
2. Compacted to 95% of maximum density. See trench zone.
3. Equivalent depth of A.T.B. may be substituted.
4. For transverse or diagonal trenches in existing roadway pavement, CDF (as defined in the standard specifications section 2-09.3(1)E) will be used for a minimum of 3' in depth or from 6" above the top of the pipe to the bottom of full pavement section which ever is less.

TRENCH ZONE:

1. Granular backfill as approved by local agency or W.S.D.O.T. specifications for granular backfill. Compacted to 95% of maximum density in the trench zone using method C compaction as per Section 2-03.3 (14).
2. Native material may be used if approved prior to construction.
3. Trench zone width -- see below.

PIPE ZONE:

1. Pipe zone material optional, or as specified by utility owner and approved by the Department.
2. 1.0 ft. maximum from top of the pipe.

CONDITIONS:

1. A copy of the permit and requirements shall be on the job site at all times.
2. The permit holder shall be responsible for all restoration and maintenance of ditches, shoulders, driveways, landscaping, etc.
3. Call Clark County at 397-2446 twenty-four hours prior to commencing work.

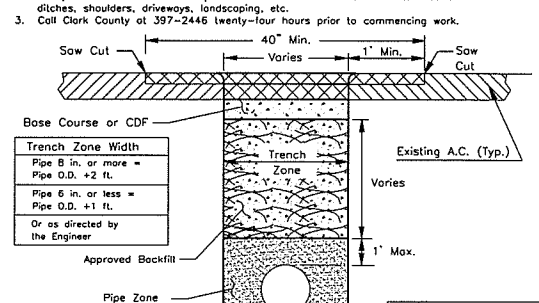

Trench Zone Width
Pipe 8 in. or more = Pipe O.D. +2 ft.
Pipe 6 in. or less = Pipe O.D. +1 ft.
Or as directed by the Engineer

DWG: TRENCH-COLLECTOR

NO.	REVISIONS	DATE	BY
1	NOTE, ENG #	05/03/01	PK
2	ILLUSTRATIVE CHANGE	07/10/01	PK

Department of Public Works
CLARK COUNTY WASHINGTON
proud past, promising future

OPEN CUT UTILITY TRENCH BACKFILL DETAIL
COLLECTOR OR ARTERIAL ROADWAY
APPROVED
PETER CAPELLI
COUNTY ENGINEER
7/20/01
DATE

U1

DESIGNED
DRAWN
DATE 7/10/01

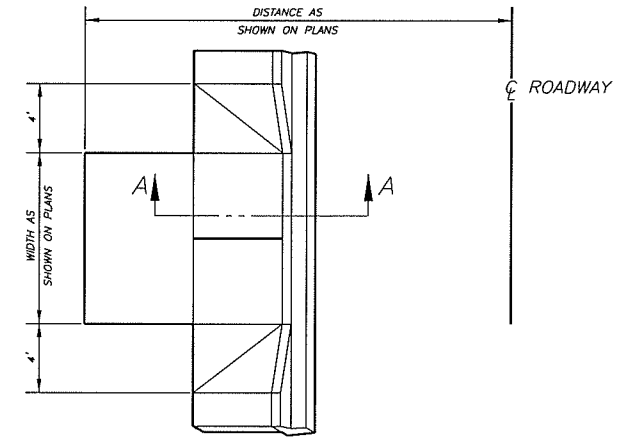

TYPICAL DRIVEWAY ENTRANCE

NTS

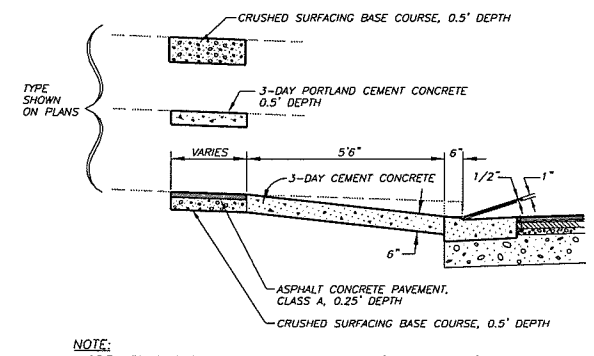

NOTE:
INCREASED PVT THICKNESS FOR INDUSTRIAL/COMMERCIAL/SCHOOL USES, PER APPROACH DETAIL TYPE 2 (ABOVE).

SECTION A-A

NTS

N:\CIP\PROJECTS\381122-NE179th-East\DESIGN\Dwg\179thERD1-2.dwg, 12/16/2003 10:49:30 AM, kerlinr

NEW CONSTRUCTION
FOR USE WITH SIDEWALKS LOCATED ANYWHERE IN THE RIGHT-OF-WAY

NOTES:

RAMPS TO BE POURED SEPARATELY FROM SIDEWALK.

CROSSWALKS TO BE CENTERED ON SIGNAL POLE TO POLE CENTERLINES. CURB RAMP TO BE CENTERED WITHIN CROSSWALK.

SIDEWALK SLOPE TO BE 2% MAXIMUM RADIALLY AROUND CORNER SECTION. SINGLE RAMPS CAN BE INSTALLED.

TRAFFIC SIGNAL POLE LOCATED ON RP-RP LINE AT 11' IN FROM CURB FACE.

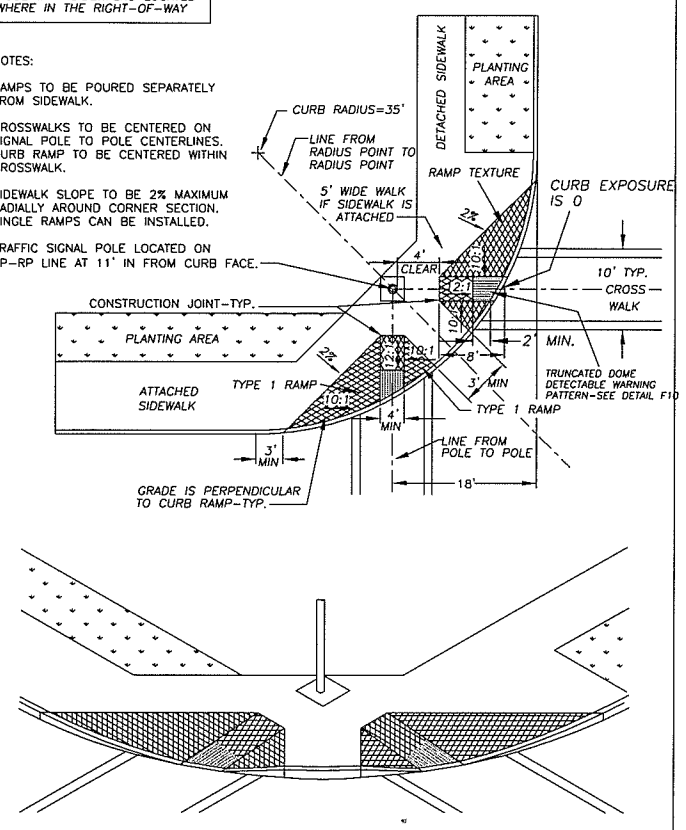

NO.	REVISIONS	DATE	BY
1	TRUNCATED DOMES	6/14/03	SCH

DWG: F1.DWG

Department of Public Works
CLARK COUNTY WASHINGTON
proud past, pro-raising future

TYPE 1 RAMP

APPROVED

Peter Capen
COUNTY ENGINEER — DATE 8/22/03

STANDARD F1
PLAN No.
DESIGNED DB
DRAWN KB
DATE 7/24/00

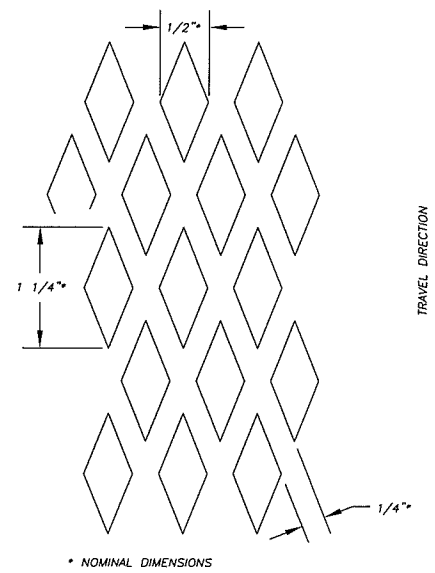

* NOMINAL DIMENSIONS

RAMP TEXTURE DETAIL

RAMP TEXTURE IS TO BE DONE WITH AN EXPANDED METAL GRATE PLACED AND REMOVED FROM WET CONCRETE TO LEAVE A DIAMOND PATTERN AS SHOWN. THE LONG AXIS OF THE DIAMOND PATTERN SHALL BE IN THE DIRECTION OF TRAVEL. GROOVES SHALL BE 1/8" DEEP AND 1/4" WIDE. ALTERNATIVE TEXTURE PATTERNS SHALL BE APPROVED BY COUNTY ENGINEER BEFORE USE.

NO.	REVISIONS	DATE	BY

DWG: F11.dwg

Department of Public Works
CLARK COUNTY WASHINGTON
proud past, pro-raising future

RAMP TEXTURE DETAIL

APPROVED

Peter Capen
COUNTY ENGINEER — DATE 8/22/03

STANDARD F11
PLAN No.
DESIGNED DB
DRAWN KB
DATE 7/24/00

CEMENT CONCRETE APPROACH

STATION	WIDTH (FT)	TYPE	STATION	WIDTH (FT)	TYPE
33+65 (RT)	18	1	80+89 (LT)	18	2
33+21 (RT)	18	1	84+83 (RT)	25	2
41+30 (RT)	18	1	85+47 (LT)	32	1
42+32 (RT)	18	1	88+44 (RT)	18	1
45+84 (LT)	18	1	88+80 (LT)	18	1
46+85 (LT)	30	COMMERCIAL	88+90 (RT)	18	1
48+17 (LT)	18	1	89+45 (RT)	30	1
48+98 (RT)	25	1	94+35 (LT)	20	1
49+66 (LT)	18	1	95+49 (RT)	40	COMMERCIAL
51+30 (LT)	25	1	96+81 (LT)	32	1
51+55 (RT)	36	COMMERCIAL	98+58 (LT)	18	1
53+19 (LT)	18	1	99+01 (RT)	18	1
53+93 (LT)	18	1	101+91 (RT)	18	1
55+93 (LT)	20	1	102+03 (LT)	32	1
57+15 (RT)	36	COMMERCIAL	103+06 (RT)	25	1
59+35 (LT)	25	1	103+59 (LT)	18	1
60+85 (LT)	20	1	104+17 (LT)	18	1
62+99 (RT)	15	1	104+19 (RT)	22	1
63+68 (RT)	15	1	108+14 (LT)	22	1
64+88 (LT)	22	2	109+75 (LT)	18	1
65+68 (RT)	16	1	111+70 (LT)	18	1
66+11 (LT)	20	2	112+56 (RT)	18	1
66+24 (RT)	18	1	113+83 (LT)	18	1
69+08 (RT)	18	1	114+66 (LT)	27	1
71+90 (RT)	18	1	115+99 (RT)	27	1
78+05 (RT)	16	2	116+30 (LT)	20	1
78+35 (LT)	18	2	119+45 (RT)	30	1
78+44 (RT)	18	2			

PRELIMINARY

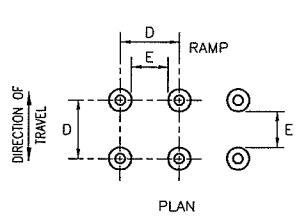

	MIN.	MAX.
D	1 5/8"	2 3/8"
E	5/8"	1 1/2"
F	7/16"	3/4"
G	7/8"	1 7/16"

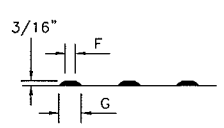

ELEVATION

TRUNCATED DOMES (SEE NOTE 2)
DETECTABLE WARNING
PATTERN DETAIL

NOTES

1. AVOID PLACING DRAINAGE STRUCTURES, JUNCTION BOXES OR OTHER OBSTRUCTIONS IN FRONT OF RAMP ACCESS AREA.

2. THE DETECTABLE WARNING PATTERNS CAN BE CREATED BY ANY MEANS THAT WILL ACHIEVE THE TRUNCATED DOME DIMENSIONS AND SPACING SHOWN.

3. PLACE TRUNCATED DOME DETECTABLE WARNING TEXTURE IN THE LOWER 24" OF THE THROAT OF THE RAMP ONLY. ARRANGE DOMES USING IN-LINE PATTERN ONLY AS SHOWN. COLOR OF TEXTURE SHALL BE SAFETY YELLOW, SEE COUNTY INSPECTOR FOR SPECIFICATIONS.

4. FOR CONSTRUCTION OF SIDEWALK RAMPS OUTSIDE OF PUBLIC RIGHT-OF-WAY, CHECK WITH STATE BUILDING CODES.

NO.	REVISIONS	DATE	BY

DWG: F10.DWG

Department of Public Works
CLARK COUNTY WASHINGTON
proud past, pro-raising future

TRUNCATED DOME DETECTABLE WARNING PATTERN

APPROVED

COUNTY ENGINEER — DATE

STANDARD F10
PLAN No.
DESIGNED SCH
DRAWN SCH
DATE 8/15/03

JOINT SPACING:
SURFACE JOINTS - 5'
CONTROL JOINTS - 15'
EXPANSION JOINTS AT, STRUCTURES, OBSTRUCTIONS, OR AS DIRECTED BY THE INSPECTOR.

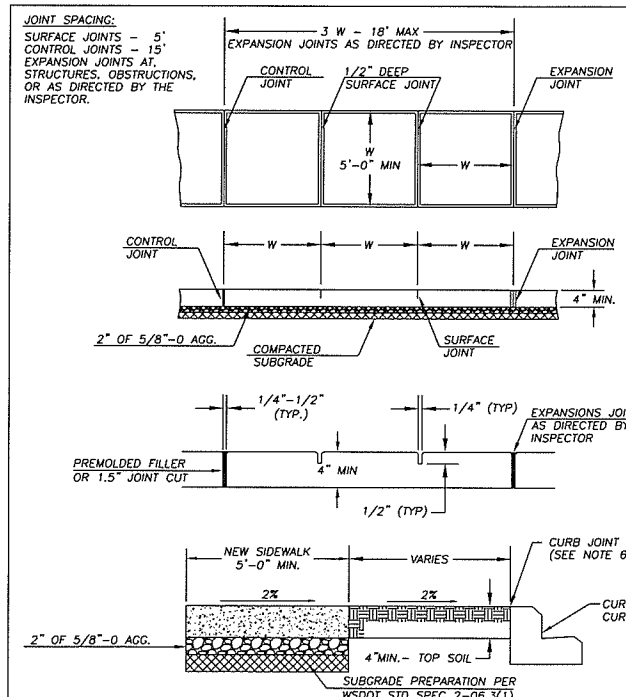

NOTES:

1. CONCRETE SHALL BE 3,000 PSI MIN. (CLASS 3000), 3 1/2" SLUMP (MAX.)

2 FINISH SHALL BE MEDIUM BROOM PERPENDICULAR TO PEDESTRIAN TRAFFIC UNLESS OTHERWISE DIRECTED.

3. ALL EXISTING EDGES SHALL BE SAWCUT.

4. NO FILLER REQUIRED FOR SURFACE JOINTS.

5. ALL JOINTS AND EDGES SHALL BE FINISHED WITH 1/4" RADIUS EDGER (3" SMOOTH EACH SIDE)

6. FOR SIDEWALKS ADJACENT TO THE CURB AND POURED AT THE SAME TIME AS THE CURB, THE JOINT BETWEEN THEM SHALL BE A TROWELED JOINT WITH A MIN. 1/2" RADIUS.

NO.	REVISIONS	DATE	BY
1	CHANGE SUBGRADE &	07/28/02	KB
2	4" BASE AGG. & NOTES	10/07/02	SCH

DWG: F12.dwg

Department of Public Works
CLARK COUNTY WASHINGTON
proud past, pro-raising future

SIDEWALK DETAIL

APPROVED

COUNTY ENGINEER — DATE

STANDARD F12
PLAN No.
DESIGNED DB
DRAWN KB
DATE 10/08/02

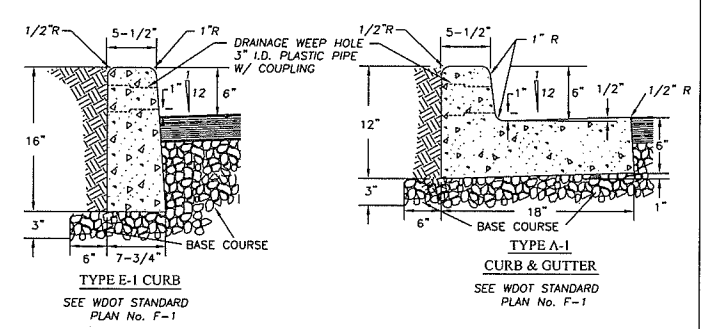

NOTES

1. CONCRETE SHALL BE 3000 PSI MIN. (CLASS 3000) 3 1/2" SLUMP (MAX.)

2. CURBS ADJACENT TO PAVEMENT OR SIDEWALK TO HAVE EXPANSION AND/OR CONTRACTION JOINTS TO MATCH EXISTING PATTERNS.

3. 3/8" EXPANSION JOINTS TO BE PROVIDED AT EACH POINT OF TANGENCY OF THE CURB, COLD JOINTS, EACH SIDE OF INLET STRUCTURES AND DRIVEWAYS. MATERIAL TO BE PRE-MOLDED, ASPHALT IMPREGNATED AND NON EXTRUDING.

4. CONTRACTION JOINT SPACING NOT TO EXCEED 15 FEET. THE DEPTH OF THE JOINT SHALL BE AT LEAST 1-1/2 INCHES. WEEP HOLES TO BE CENTERED WITH CONTRACTION JOINTS.

5. BASE COURSE SHALL BE TO SUBGRADE OF STREET SECTION OR 3 INCHES, WHICHEVER IS GREATER, AND SHALL EXTEND 6" BEHIND THE CURB.

6. DRAINAGE WEEP HOLES TO BE 3" I.D. PLASTIC PIPE WITH COUPLING. FINISH PIPE END FLUSH WITH FACE OF CURB.

7. GROUT ANY VOIDS IN CONCRETE SURROUNDING PIPE.

8. DRAINAGE ACCESS THROUGH EXISTING CURBS SHALL BE CORE DRILLED.

9. CURB TO BE BRUSH FINISHED. ALL EXISTING EDGES SHALL BE SAWCUT.

10. ALL MATERIALS AND WORKMANSHIP FOR TYPE E-1 & A-1 SHALL BE IN ACCORDANCE WITH WDOT STANDARD PLAN No. F-1, APPROVED 7/18/97 OR MOST CURRENT REVISION.

NO.	REVISIONS	DATE	BY

DWG: F18-18a.DWG

Department of Public Works
CLARK COUNTY WASHINGTON
proud past, pro-raising future

CONCRETE CURBS

APPROVED

COUNTY ENGINEER — DATE

STANDARD F18
PLAN No.
DESIGNED SCH
DRAWN SCH
DATE 07/24/02

DESIGNED	MME
DRAWN	RK
CRP	381122
HOR.	NA
VERT.	NA
DATE	12/22/03
DWG:	RD2
SHEET X	OF X

CALL 48 HOURS BEFORE YOU DIG
1-800-553-4344
"It's the Law"
NORTHWEST UTILITIES NOTIFICATION CENTER

STATE OF WASHINGTON
RICHARD W. KIRCK
29030
PROFESSIONAL ENGINEER
EXPIRES: MAY 26, 2005

DESIGN & ENGINEERING DIVISION
DESIGN SECTION

NE 179TH STREET (I-5 TO NE 50TH AVE)
ROADWAY DETAILS

proud past, pro-raising future
CLARK COUNTY WASHINGTON

N:\CIP\PROJECTS\381122-NE179th-East\DESIGN\Dwg\179thERD1-2.dwg, 12/16/2003 10:49:52 AM, kerlinr

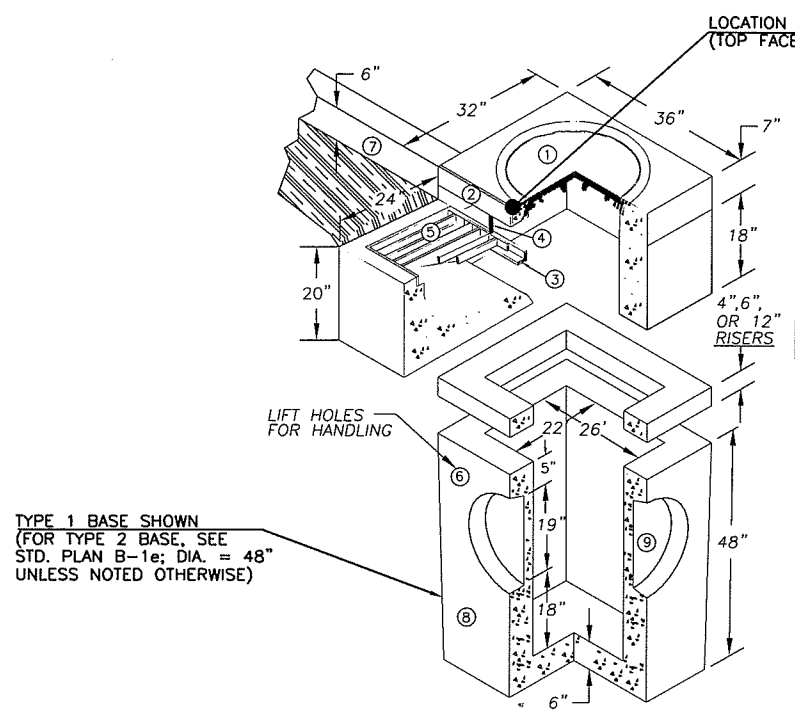

#	
1	24"ALUMINUM LOCKING FRAME & COVER
2	2 1/2"x3 1/2"x1/4"x 35 7/8" GALVANIZED ANGLE IRON
3	2"x2 1/2"x1/4"x33" GALVANIZED ANGLE IRON
4	2 EA. #4 TRASH BARS @12" O.C.
5	24 3/4"x 28 1/2" GALVANIZED GRATE
6	2 EA. BASE UNIT LIFT HOLES
7	6" CURB AND 18" GUTTERS
8	STANDARD TYPE 1 BASE UNIT
9	PIPE KNOCKOUTS ALL FOUR SIDES.

WEIGHT:

TOP WEIGHT 420 LB.

RISER WITH GRATE
WEIGHT 1920 LB.

BASE WEIGHT 2200 LB.

NOTES:

1 REINFORCING FOR INLET UNIT 3 EA. #4 HORIZONTAL BARS.
2 REINFORCING FOR TOP UNIT 2 EA. #3 HORIZONTAL BARS
3 REINFORCING FOR INLET SLOPED BASE, 4x4 MESH
4 GUTTER IS TAPERED DOWN TO GRATE INLET
5 ALL CONCRETE IS 4,000 PSI MIN.
6 ALL REBAR MEETS ASTM A615 GRADE 60.

COMBINATION CURB INLET

NTS

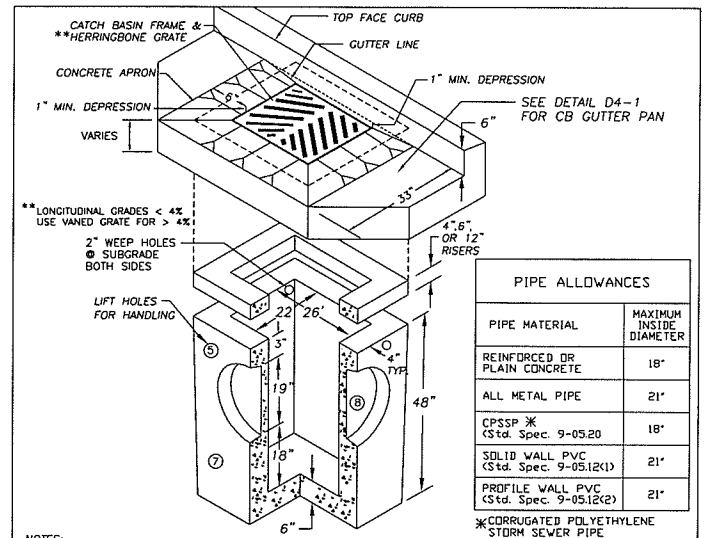

PIPE ALLOWANCES	
PIPE MATERIAL	MAXIMUM INSIDE DIAMETER
REINFORCED OR PLAIN CONCRETE	18"
ALL METAL PIPE	21"
CPSSP ✱ (Std. Spec. 9-05.20	18"
SOLID WALL PVC (Std. Spec. 9-05.12(1)	21"
PROFILE WALL PVC (Std. Spec. 9-05.12(2)	21"

✱CORRUGATED POLYETHYLENE STORM SEWER PIPE

NOTES:

1. CURB INLET TO BE CONSTRUCTED IN ACCORDANCE WITH ASTM C478 (AASHTO) M 199) & C890 UNLESS SHOWN ON PLANS OR NOTED IN STANDARD SPECIFICATIONS.
2. REINFORCING FOR INLET UNIT, 3 EA. #4 HORIZONTAL BARS.
3. REINFORCING FOR TOP UNIT, 2 EA. #3 HORIZONTAL BARS.
4. ALL REBAR TO MEET ASTM A615 GRADE 60.
5. AS AN ACCEPTABLE ALTERNATIVE TO REBAR, WELDED WIRE FABRIC HAVING A MIN. AREA OF 0.12 SQUARE INCHES PER FOOT MAY BE USED. WELDED WIRE FABRIC SHALL COMPLY TO ASTM A497. WIRE FABRIC SHALL NOT BE PLACED IN KNOCKOUTS.
6. ALL REINFORCED CAST-IN-PLACE CONCRETE SHALL BE CLASS 4,000.
7. PRECAST BASES SHALL BE FURNISHED WITH CUTOUTS OR KNOCKOUTS. KNOCKOUTS SHALL HAVE A WALL THICKNESS OF 2" MIN. ALL PIPE SHALL BE INSTALLED IN FACTORY PROVIDED KNOCKOUTS. UNUSED KNOCKOUTS NEED NOT BE GROUTED IF WALL IS LEFT INTACT.
8. KNOCKOUTS OR CUTOUT HOLE SIZE IS EQUAL TO PIPE OUTER DIAM. PLUS INLET WALL THICKNESS.
9. ROUND KNOCKOUTS MAY BE ON ALL 4 SIDES WITH MAX. DIAM. OF 20".
10. THE MAX. DEPTH FROM THE FINISHED GRADE TO THE PIPE INVERT IS 5'-0".
11. ANY PROTRUDING ENDS OF PIPES SHALL BE TRIMMED FLUSH WITH THE INSIDE WALLS AND GROUTED TO THE SATISFACTION OF ENGINEER.
12. CATCH BASIN FRAME AND GRATE SHALL BE IN ACCORDANCE WITH WDOT STANDARD SPECIFICATIONS AND MEET THE STRENGTH REQUIREMENTS OF FEDERAL SPECIFICATION RR-F-621D. MATING SURFACES SHALL BE FINISHED TO ASSURE NON-ROCKING FIT WITH ANY COVER POSITION.
13. FRAME MAY BE INSTALLED WITH FLANGE DOWN OR CAST INTO RISER.
14 INSTALL REMOVABLE APWA TYPE 60A TRAP OR EQUAL, SEE STD. PLAN D2.1.
15. CONTRACTOR SHALL HAVE THE OPTION OF FURNISHING PRECAST OR CAST-IN-PLACE INLET STRUCTURES, UNLESS SPECIFIED.

NO.	REVISIONS	DATE	BY

DWG: D4-0.1.DWG

Department of Public Works
CLARK COUNTY
WASHINGTON
proud past, promising future

STANDARD CATCH BASIN
TYPE 1
APPROVED

COUNTY ENGINEER — DATE

STANDARD D4-0
PLAN No.
DESIGNED SCH
DRAWN SCH
DATE 07/01/03

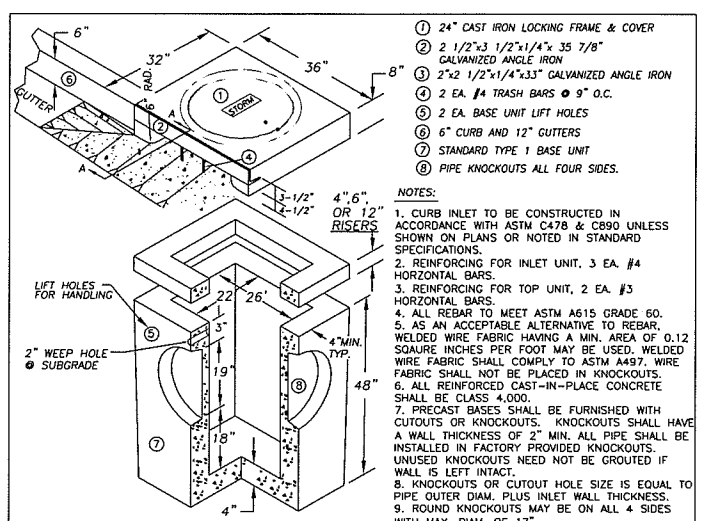

① 24" CAST IRON LOCKING FRAME & COVER
② 2 1/2"x3 1/2"x1/4"x 35 7/8" GALVANIZED ANGLE IRON
③ 2"x2 1/2"x1/4"x33" GALVANIZED ANGLE IRON
④ 2 EA. #4 TRASH BARS @ 9" O.C.
⑤ 2 EA. BASE UNIT LIFT HOLES
⑥ 6" CURB AND 12" GUTTERS
⑦ STANDARD TYPE 1 BASE UNIT
⑧ PIPE KNOCKOUTS ALL FOUR SIDES.

NOTES:

1. CURB INLET TO BE CONSTRUCTED IN ACCORDANCE WITH ASTM C478 & C890 UNLESS SHOWN ON PLANS OR NOTED IN STANDARD SPECIFICATIONS.
2. REINFORCING FOR INLET UNIT, 3 EA. #4 HORIZONTAL BARS.
3. REINFORCING FOR TOP UNIT, 2 EA. #3 HORIZONTAL BARS.
4. ALL REBAR TO MEET ASTM A615 GRADE 60.
5. AS AN ACCEPTABLE ALTERNATIVE TO REBAR, WELDED WIRE FABRIC HAVING A MIN. AREA OF 0.12 SQUARE INCHES PER FOOT MAY BE USED. WELDED WIRE FABRIC SHALL COMPLY TO ASTM A497. WIRE FABRIC SHALL NOT BE PLACED IN KNOCKOUTS.
6. ALL REINFORCED CAST-IN-PLACE CONCRETE SHALL BE CLASS 4,000.
7. PRECAST BASES SHALL BE FURNISHED WITH CUTOUTS OR KNOCKOUTS. KNOCKOUTS SHALL HAVE A WALL THICKNESS OF 2" MIN. ALL PIPE SHALL BE INSTALLED IN FACTORY PROVIDED KNOCKOUTS. UNUSED KNOCKOUTS NEED NOT BE GROUTED IF WALL IS LEFT INTACT.
8. KNOCKOUTS OR CUTOUT HOLE SIZE IS EQUAL TO PIPE OUTER DIAM. PLUS INLET WALL THICKNESS.
9. ROUND KNOCKOUTS MAY BE ON ALL 4 SIDES WITH MAX. DIAM. OF 17".
10. THE MAX. DEPTH FROM THE FINISHED GRADE TO THE PIPE INVERT IS 5'-0".
11. ANY PROTRUDING ENDS OF PIPES SHALL BE TRIMMED FLUSH WITH THE INSIDE WALLS AND GROUTED TO THE SATISFACTION OF ENGINEER.
12. GUTTER IS TAPERED DOWN TO INLET.
13. INSTALL REMOVABLE APWA TYPE 60A TRAP OR EQUAL, SEE STD. PLAN D2.1.
14. CONTRACTOR SHALL HAVE THE OPTION OF FURNISHING PRECAST OR CAST-IN-PLACE INLET STRUCTURES, UNLESS SPECIFIED.

TYPE 1 CURB INLET

NTS

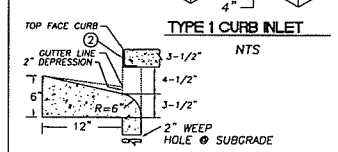

SECTION A-A

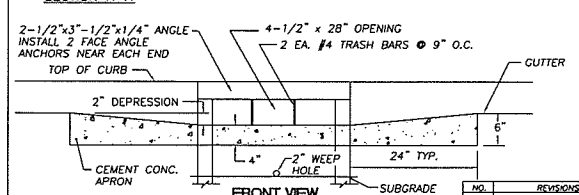

FRONT VIEW

NO.	REVISIONS	DATE	BY

DWG: D2-0.DWG

Department of Public Works
CLARK COUNTY
WASHINGTON
proud past, promising future

STANDARD TYPE 1
CURB INLET
APPROVED

COUNTY ENGINEER — DATE

STANDARD D2.0
PLAN No.
DESIGNED SCH
DRAWN SCH
DATE 09/09/02

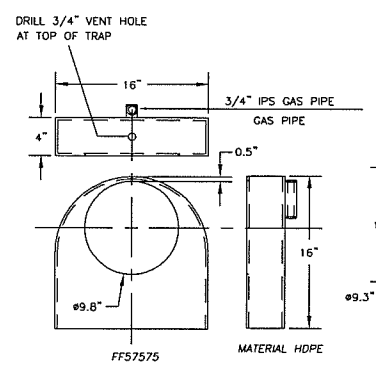

LOW PROFILE ELBOW

NTS

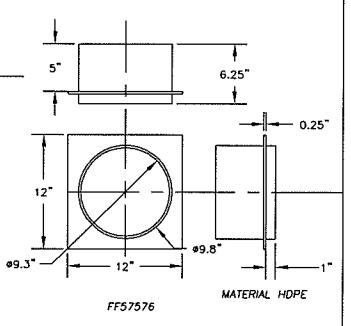

ELBOW INSERT

NTS

ZYMARK BRAND OR EQUIVALENT

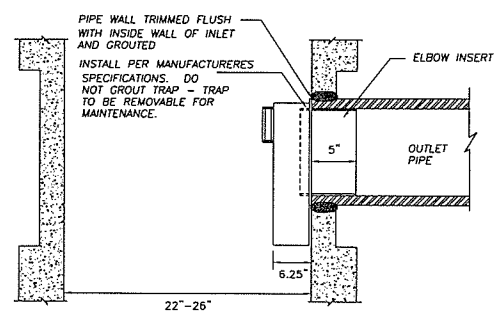

NO.	REVISIONS	DATE	BY

DWG: D2-1.DWG

Department of Public Works
CLARK COUNTY
WASHINGTON
proud past, promising future

CATCH BASIN
OUTLET PIPE TRAP
APPROVED

COUNTY ENGINEER — DATE

STANDARD D2.1
PLAN No.
DESIGNED SCH
DRAWN SCH
DATE 09/23/02

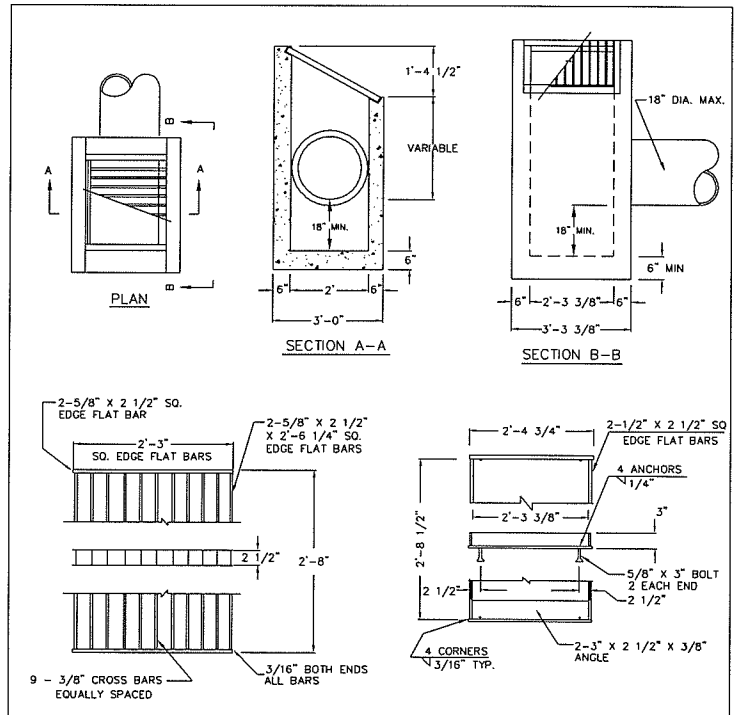

NOTES:

1. DITCH INLET CONSTRUCTION IN ACCORDANCE WITH ASTM C-478
2. CATCH BASIN, FRAME, AND GRATES SHALL BE FLAT BAR STEEL OR APPROVED EQUAL.
3. INSIDE FRAME DIMENSIONS: 2'-3 3/8"x 2'-8 1/2"".
4. 3/8" CROSS BARS SHALL BE FLUSH WITH THE GRATE SURFACE AND MAY BE FILLET WELDED, RESISTANCE WELDED OR ELECTROFORGED TO BEARING BARS.

NO.	REVISIONS	DATE	BY

DWG: D5.DWG

Department of Public Works
CLARK COUNTY
WASHINGTON
proud past, promising future

DITCH INLET
APPROVED

COUNTY ENGINEER — DATE

STANDARD D6
PLAN No.
DESIGNED SCH
DRAWN SCH
DATE 08/17/02

DESIGNED	JM
DRAWN	RK
CRP	381122
HOR.	NA
VERT.	NA
DATE	12/22/03
DWG:	DD1
SHEET	OF

CALL 48 HOURS BEFORE YOU DIG
1-800-553-4344
"It's the Law"
NORTHWEST UTILITIES NOTIFICATION CENTER

STATE OF WASHINGTON
MICHAEL D. WASHINGTON
STATE REGISTERED PROFESSIONAL ENGINEER
EXPIRES: OCT. 7, 2005.

DESIGN & ENGINEERING DIVISION
DESIGN SECTION

NE 179TH STREET (I-5 TO NE 50TH AVE)
DRAINAGE DETAILS I

proud past, promising future
CLARK COUNTY
WASHINGTON

N:\CIP\PROJECTS\381122-NE179th-East\DESIGN\Dwg\179thEDD1_old.dwg, 12/17/2003 10:24:33 AM, kerlinr

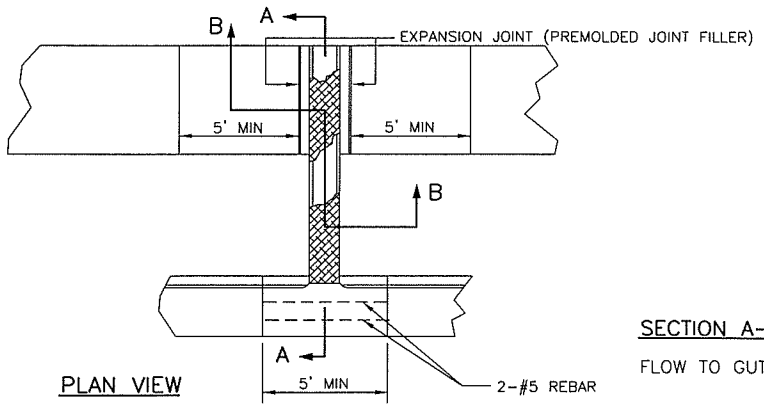

PLAN VIEW

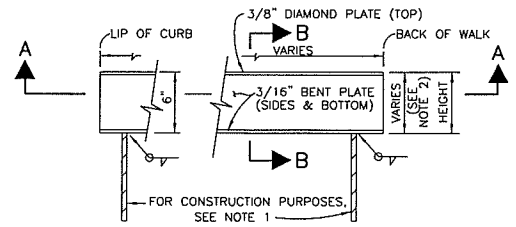

SIDEWALK CHASE ELEVATION

SECTION A-A

FLOW TO GUTTER

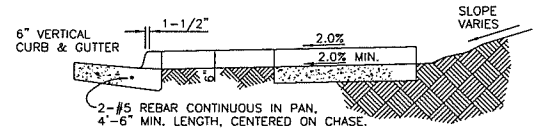

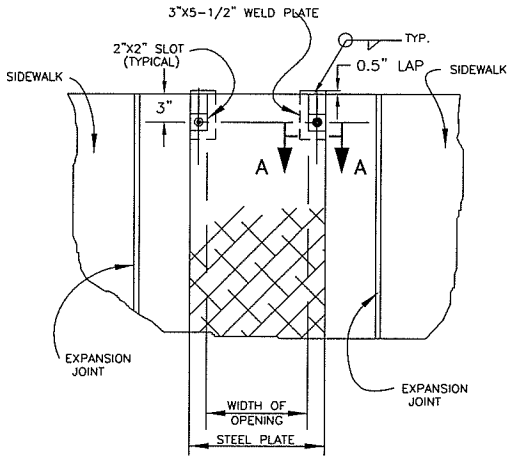

NOTE: REMOVABLE PLATE SHALL HAVE TWO (2) ANCHOR BOLTS LOCATED AS SHOWN ABOVE AT EACH END OF THE CHASE.

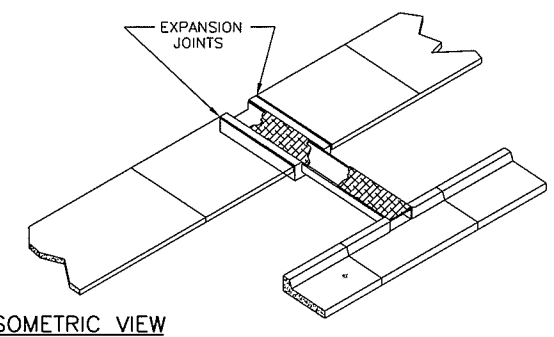

ISOMETRIC VIEW

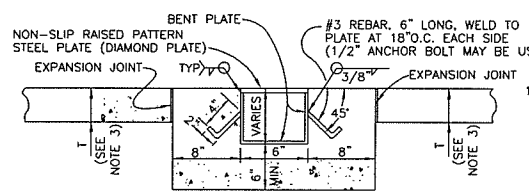

SECTION B-B

NOTES

1. 18"-#4 REBAR: WELD ONE BAR NEAR EACH END OF TUBE; SUPPLY AT LEAST TWO BARS PER TUBE, MORE IF CONTRACTOR DEEMS APPROPRIATE. REBAR IS USED TO SUPPORT AND ALIGN TUBE UNTIL CONCRETE IS PLACED.
2. HEIGHT OF SIDEWALK CHASE SHALL MATCH CURB HEIGHT, I.E., HEIGHT FROM FLOWLINE TO TOP OF CURB.
3. T = THICKNESS OF WALK.
4. ALL STEEL SHALL BE GALVANIZED

SIDEWALK CHASE

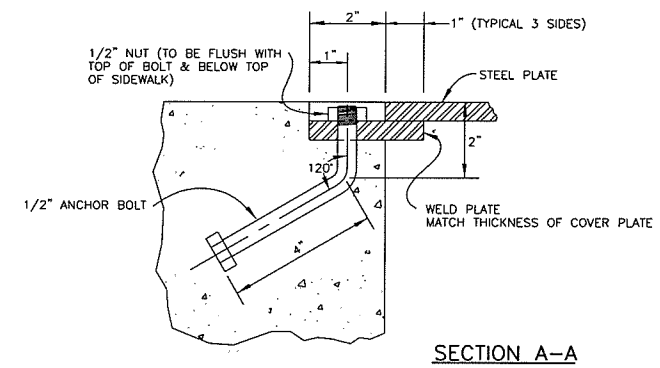

SECTION A-A

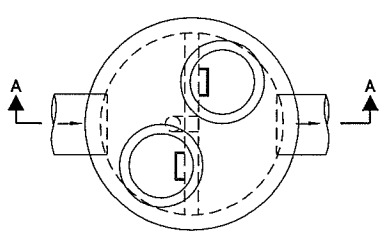

PLAN VIEW

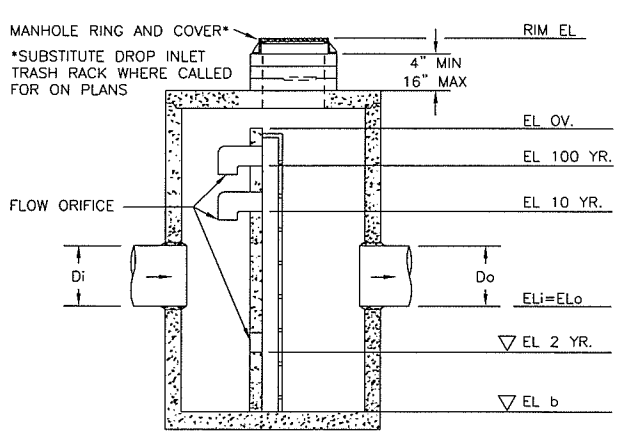

SECTION A-A

OUTLET CONTROL STRUCTURE

(MODIFIED CATCH BASIN TYPE 2)

N.T.S.

OUTLET CONTROL STRUCTURE
TABLE OF DIMENSIONS/ELEVATIONS

		SWF #1	SWF #2	SWF #3	SWF #4
CB DIAM.	A.	84"	84"	84"	84"
PIPE DIAMS	Di	24"	24"	18"	24"
	Do	24"	24"	18"	24"
ELEVATIONS	ELb	222.0	230.0	206.0	188.0
	ELi=ELo	225.0	233.0	209.0	191.0
	EL 2 yr	224.0	232.0	208.0	190.0
	EL 10 yr	2XX.XX	2XX.XX	2XX.XX	2XX.XX
	EL 100 yr	228.0	237.0	212.0	194.0
	EL OV.	228.5	237.5	212.5	194.5
	RIM EL	NA	NA	N.A.	N.A.
	DEBRIS RACK GRATE	229.0	238.0	213.0	195.0
ORIFICE DIA (FT)	d 2 yr	0.XXX	0.XXX	0.XXX	0.XXX
	d 10 yr	0.XXX	0.XXX	0.XXX	0.XXX
	d 100 yr	0.XXX	0.XXX	0.XXX	0.XXX

OUTLET CONTROL STRUCTURE

NOTES:
1. SEE WDOT STANDARD PLAN B-3a FOR CONSTRUCTION DETAILS AND ADDITIONAL INFORMATION.
2. CONTRACTOR TO SUBMIT DETAILED SHOP DRAWINGS FOR EACH STRUCTURE FOR ENGINEER'S REVIEW AND APPROVAL PRIOR TO FABRICATION AND INSTALLATION.

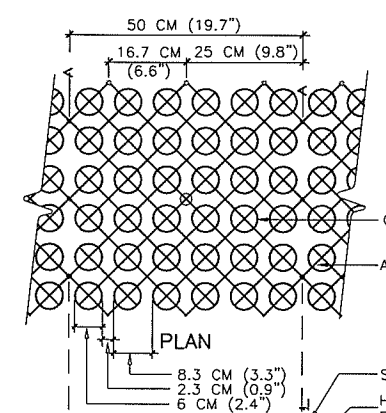

SPECIFICATIONS

UNIT SIZE – 50 CM X 50 CM X 2.5 CM (20" X 20" X 1")

UNIT WEIGHT – 510 GRAMS (18 OZ.) OR 2.0 KG (4.5 POUNDS)

STRENGTH – 402 KG/CM (5720 PSI)

COLOR – BLACK (STANDARD)

RESIN – HDPE (WITH SOME POST-CONSUMER RECYCLED CONTENT)

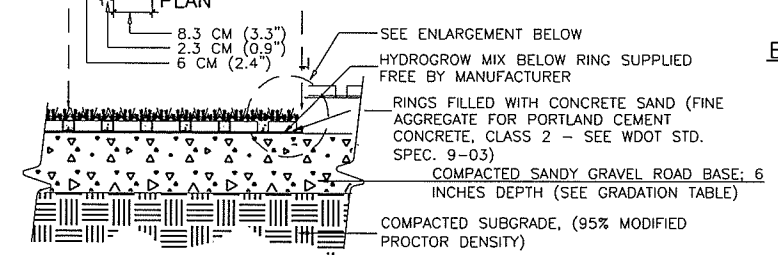

SECTION

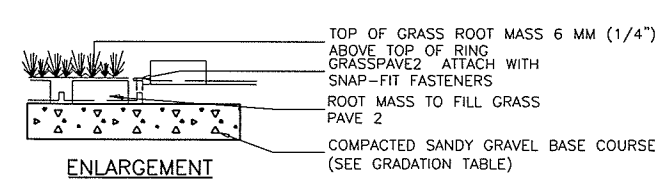

ENLARGEMENT

POROUS PAVER DETAIL

NOT TO SCALE

BASE COURSE GRADATION

SEIVE SIZE	% PASSING
3/4"	100
3/8"	85
#4 SCREEN	60
#40 SCREEN	30
#200 SCREEN	<3

NOTES

1. POROUS PAVERS SHALL BE "GRASSPAVE 2" OR APPROVED EQUAL ("GRASSPAVE" SHOWN)
2. INSTALL PER MANUFACTURERS INSTRUCTIONS AND AS DIRECTED BY ENGINEER.
3. GRASS MIX AS FOR STORMWATER FACILITY
4. PROVISION & INSTALLATION OF ALL MATERIALS INCLUDING BASE COURSE INCLUDED IN COST FOR POROUS PAVER BID ITMES.

DESIGNED	JM
DRAWN	RK
CRP	381122
HOR.	NTS
VERT.	NTS
DATE	12/22/03
DWG:	DD2
SHEET	OF

CALL 48 HOURS BEFORE YOU DIG 1-800-553-4344 "It's the Law" NORTHWEST UTILITIES NOTIFICATION CENTER

STATE OF WASHINGTON JAMES MILLER 19331 PROFESSIONAL ENGINEER EXPIRES JULY 7, 2005

DESIGN & ENGINEERING DIVISION
DESIGN SECTION

NE 179TH STREET (I-5 TO NE 50TH AVE)
DRAINAGE DETAILS II

proud past, promising future
CLARK COUNTY WASHINGTON

N:\CIP\PROJECTS\381122-NE179th-East\DESIGN\Dwg\179thEDD2.dwg, 12/17/2003 10:25:37 AM, kerlinr

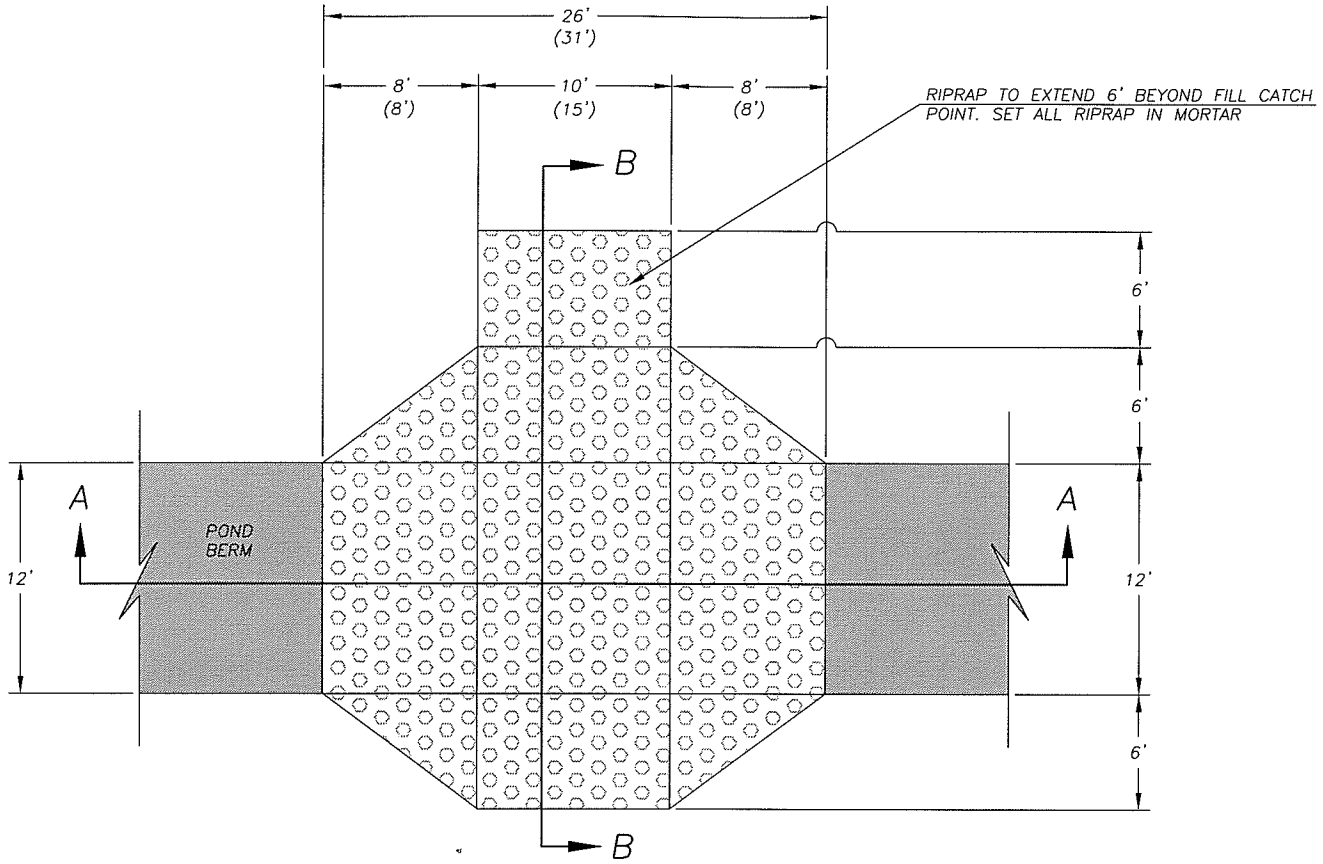

PLAN VIEW
NTS

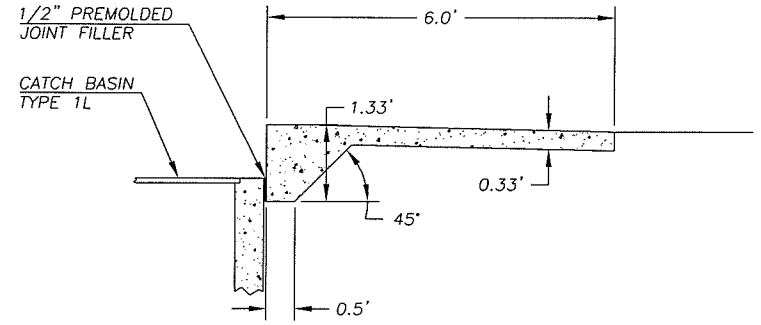

THICKENED CURB SIDEWALK
NTS
TYP. STA 14+23 LT TO STA 14+40 LT

Fed. Aid No.
STPR 1068(001)

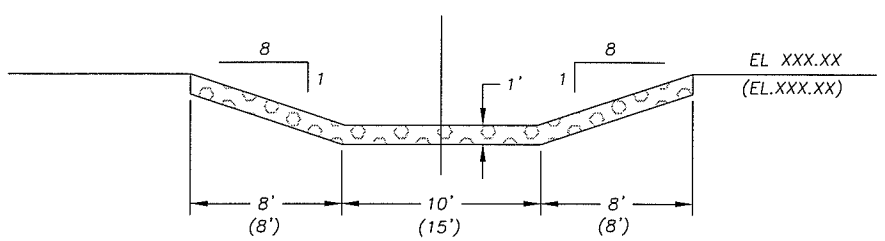

SECTION A–A
NTS

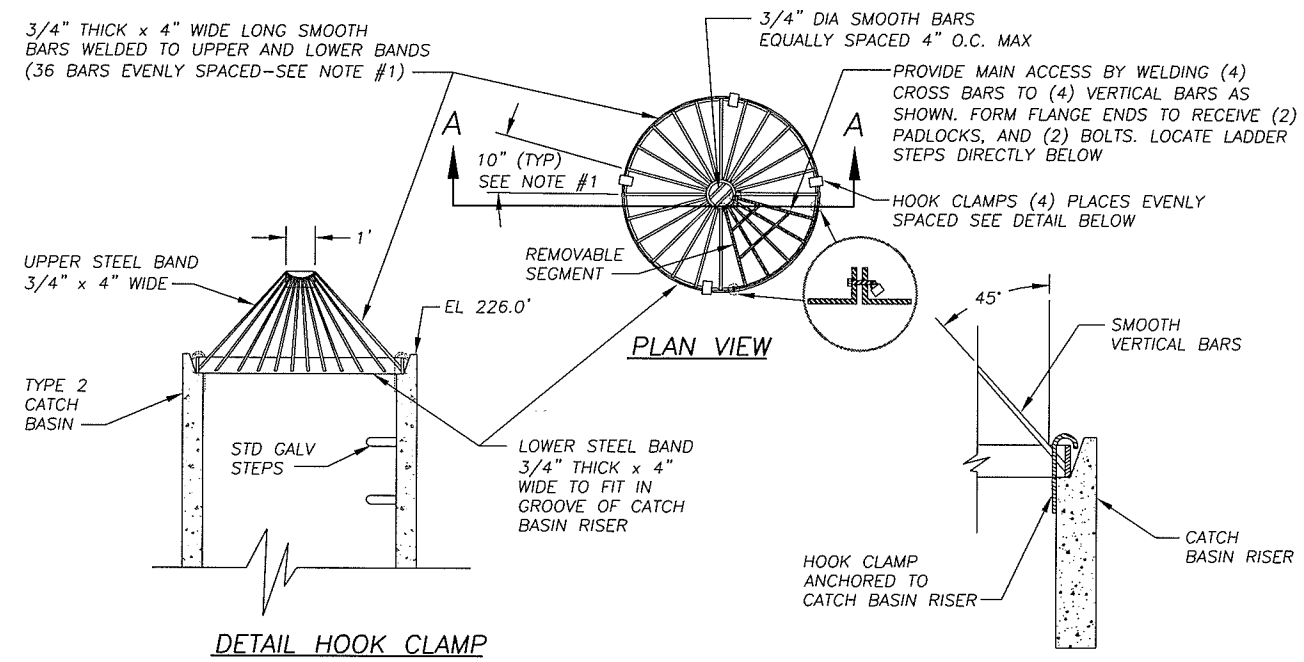

DROP INLET TRASH RACK
NTS

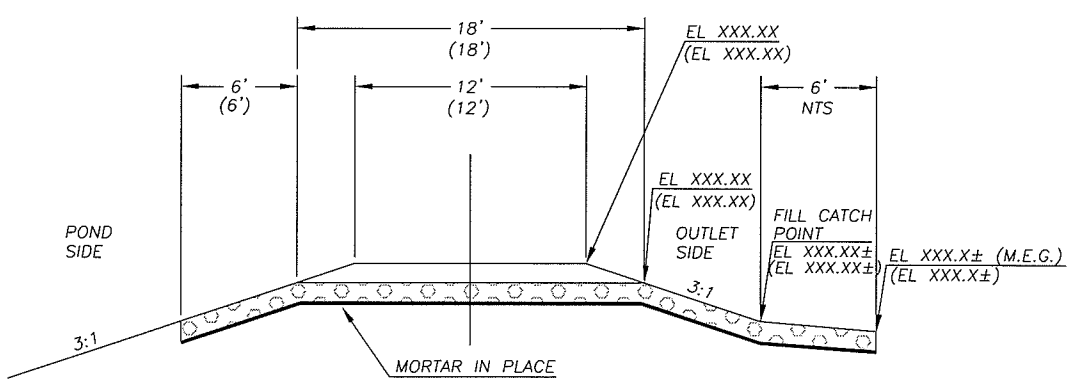

SECTION B–B
NTS

OVERFLOW WEIR SWCF #1
(SWCF #1)

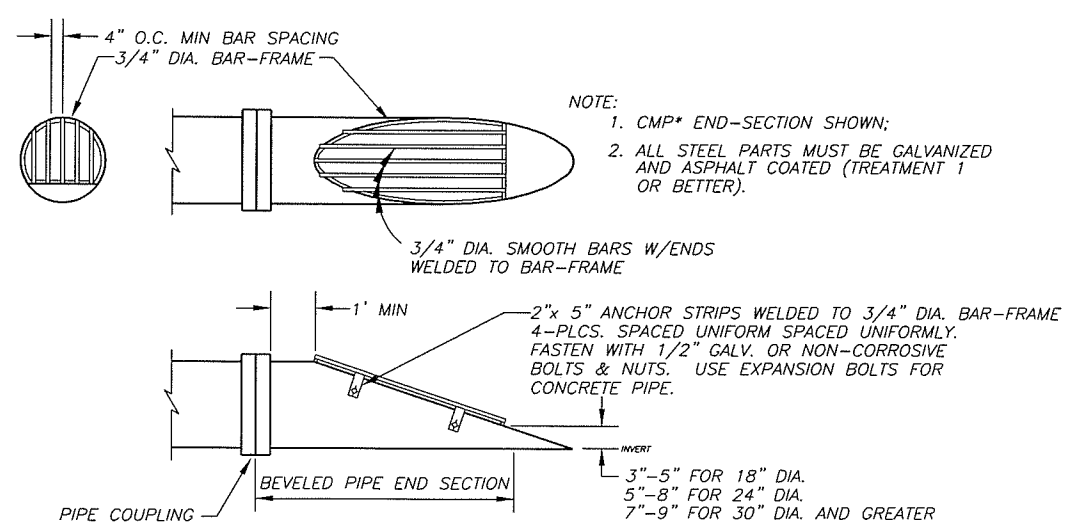

DEBRIS RACK

PRELIMINARY

DESIGNED	JM
DRAWN	BK
CRP	381122
HOR.	NA
VERT.	NA
DATE	12/22/03
DWG:	DD3
SHEET	OF

CALL 48 HOURS BEFORE YOU DIG 1–800–553–4344 "It's the Law" NORTHWEST UTILITIES NOTIFICATION CENTER

STATE OF WASHINGTON JOHN F. BARNETT 15417 REGISTERED PROFESSIONAL ENGINEER EXPIRES MARCH 17, 2005

DESIGN & ENGINEERING DIVISION
DESIGN SECTION

NE 179TH STREET (I–5 TO NE 50TH AVE)
DRAINAGE DETAILS III

proud past, promising future
CLARK COUNTY WASHINGTON

N:\CIP\PROJECTS\381122-NE179th-East\DESIGN\Dwg\179thEDD3.dwg, 12/17/2003 10:26:12 AM, kerlinr

FLOW SPLITTER MANHOLE DETAIL
(Modified Catch Basin Type 2)

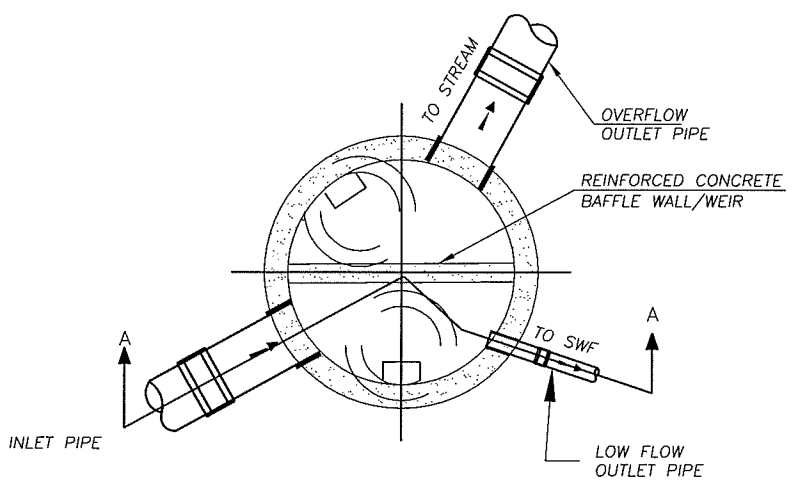

PLAN
N.T.S

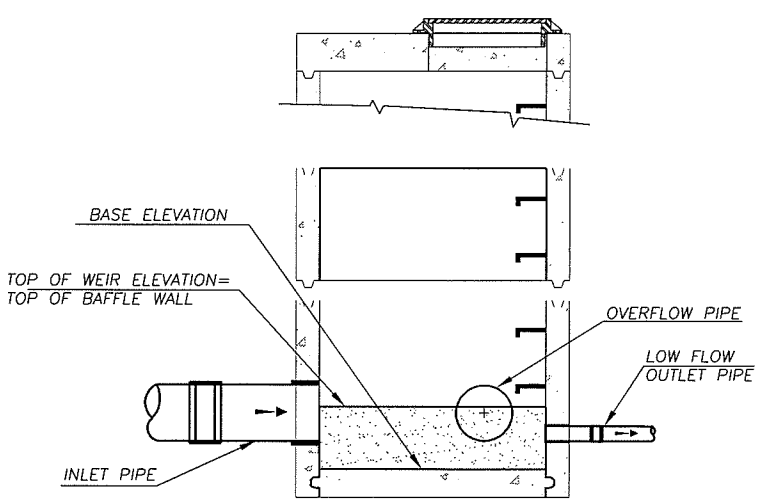

SECTION A–A
N.T.S

NOTES:
1. SEE PLANS FOR STRUCTURE LOCATIONS AND SIZES
2. SEE WDOT STANDARD PLAN B–3A. NO ORIFICES OR ELBOWS REQUIRED IN BAFFLE WALL.
3. DUAL MANHOLE OPENINGS REQUIRED.

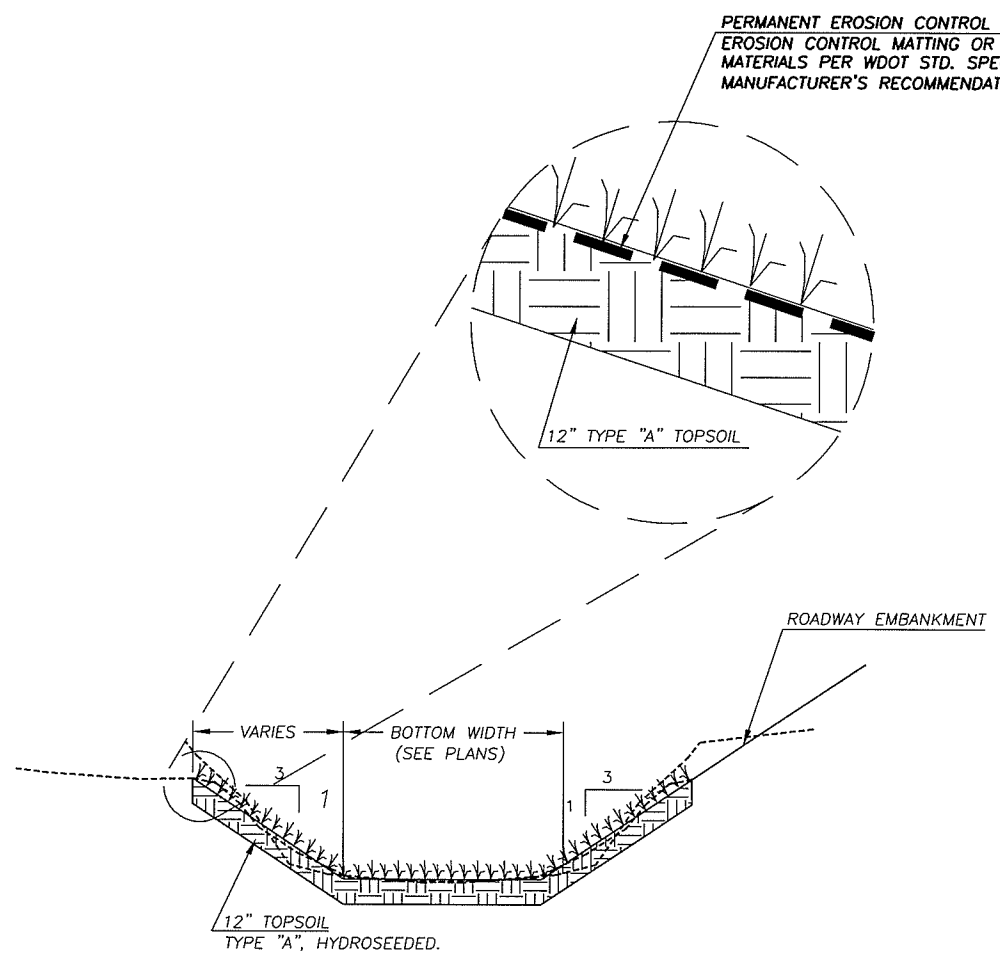

DITCH/TOE OF EMBANKMENT PROTECTION
(PERMANENT EROSION CONTROL BLANKET)
N.T.S.

NOTES:
1. PERMANENT EROSION CONTROL BLANKET PER WDOT STD. SPEC. 9–14.5. INSTALL PER MANUFACTURER'S RECOMMENDATIONS.
2. EXTEND PERMANENT EROSION CONTROL 3' (VERTICA) ABOVE DITCH INVERT (BOTH SIDES)

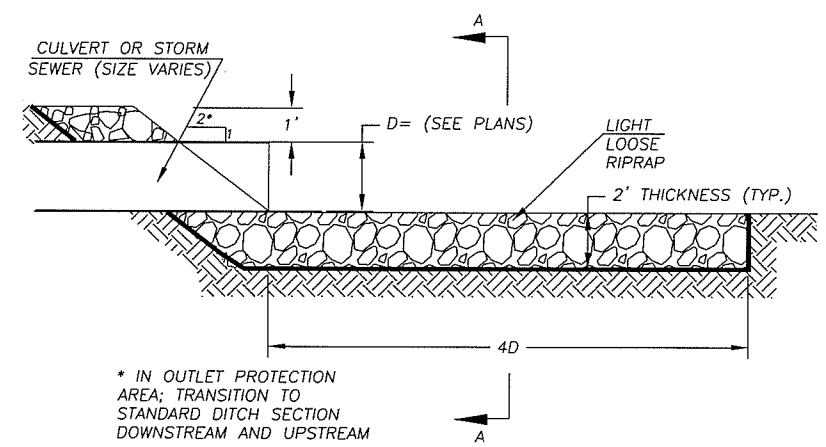

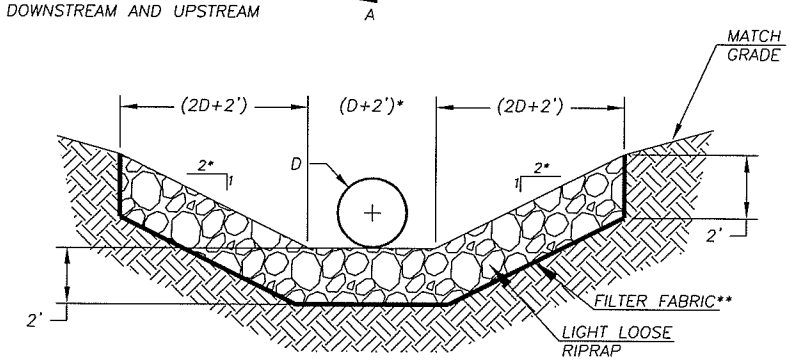

SECTION A–A

** CONSTRUCTION GEOTEXTILE FOR SEPARATION OR SOIL STABILIZATION (WSDOT 9–33, TABLE 3)

OUTFALL DISCHARGE PROTECTION
N.T.S.

DESIGNED	JM
DRAWN	RK
CRP	381122
HOR.	NA
VERT.	NA
DATE	12/22/03
DWG:	DD4
SHEET	OF

CALL 48 HOURS BEFORE YOU DIG 1-800-553-4344 "It's the Law" NORTHWEST UTILITIES NOTIFICATION CENTER

STEVEN D. MILLER STATE OF WASHINGTON 21148 REGISTERED PROFESSIONAL ENGINEER
EXPIRES JULY 7, 2005

DESIGN & ENGINEERING DIVISION
DESIGN SECTION

NE 179TH STREET (I-5 TO NE 50TH AVE)
DRAINAGE DETAILS IV

proud past, promising future
CLARK COUNTY WASHINGTON

N:\CIP\PROJECTS\381122-NE179th-East\DESIGN\Dwg\179thEDD4.dwg, 12/17/2003 10:26:41 AM, kerlinr

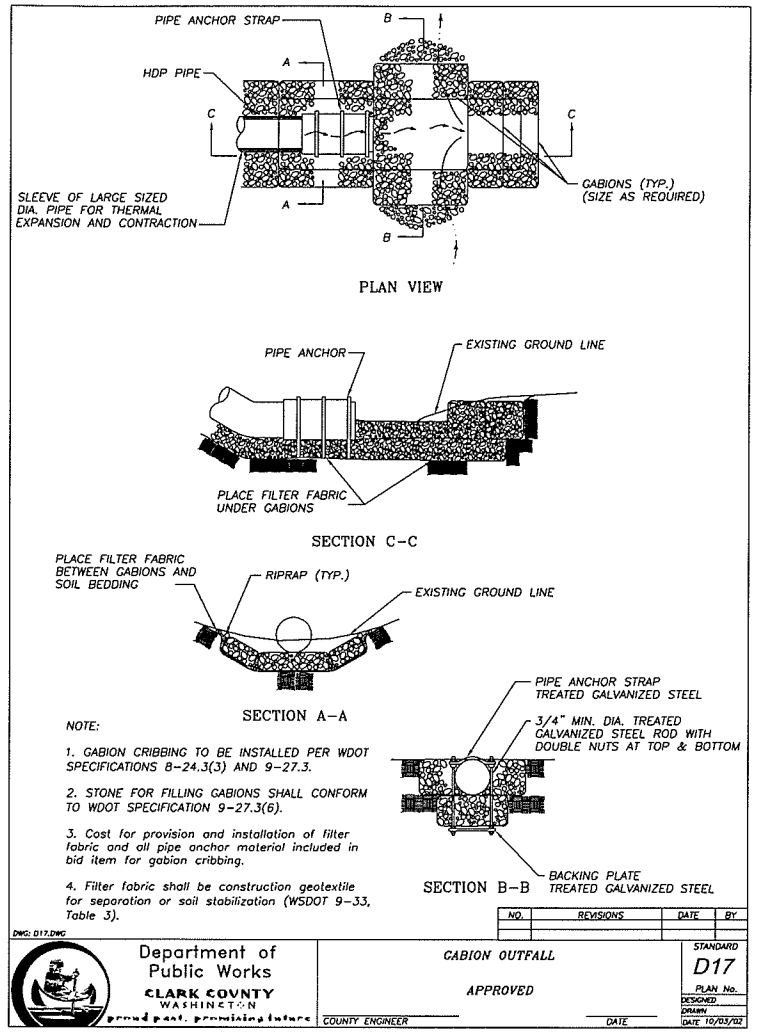

NOTE:

1. GABION CRIBBING TO BE INSTALLED PER WDOT SPECIFICATIONS 8-24.3(3) AND 9-27.3.

2. STONE FOR FILLING GABIONS SHALL CONFORM TO WDOT SPECIFICATION 9-27.3(6).

3. Cost for provision and installation of filter fabric and all pipe anchor material included in bid item for gabion cribbing.

4. Filter fabric shall be construction geotextile for separation or soil stabilization (WSDOT 9-33, Table 3).

DWG: D17.DWG

NO.	REVISIONS	DATE	BY

Department of Public Works
CLARK COUNTY
WASHINGTON
proud past, promising future

CABION OUTFALL

APPROVED

COUNTY ENGINEER DATE

STANDARD D17
PLAN No.
DESIGNED
DRAWN
DATE 10/03/02

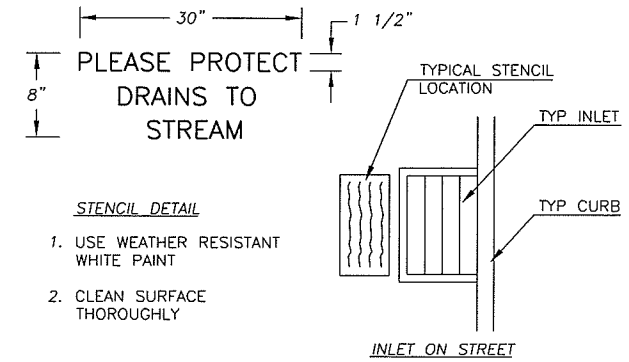

STENCIL DETAIL

1. USE WEATHER RESISTANT WHITE PAINT
2. CLEAN SURFACE THOROUGHLY

INLET STENCIL DETAIL

NTS

DESIGNED	JM
DRAWN	RK
CRP	381122
HOR.	NA
VERT.	NA
DATE	12/22/03
DWG:	DD5
SHEET	OF

CALL 48 HOURS BEFORE YOU DIG
1-800-553-4344
"It's the Law"
NORTHWEST UTILITIES NOTIFICATION CENTER

STATE OF WASHINGTON
MILLIE
REGISTERED PROFESSIONAL ENGINEER
EXPIRES JULY 7, 2005

DESIGN & ENGINEERING DIVISION
DESIGN SECTION

NE 179TH STREET (I-5 TO NE 50TH AVE)
DRAINAGE DETAILS V

proud past, promising future
CLARK COUNTY
WASHINGTON

N:\CIP\PROJECTS\381122-NE179th-East\DESIGN\Dwg\179thEDD5.dwg, 12/17/2003 10:31:57 AM, kerlinr

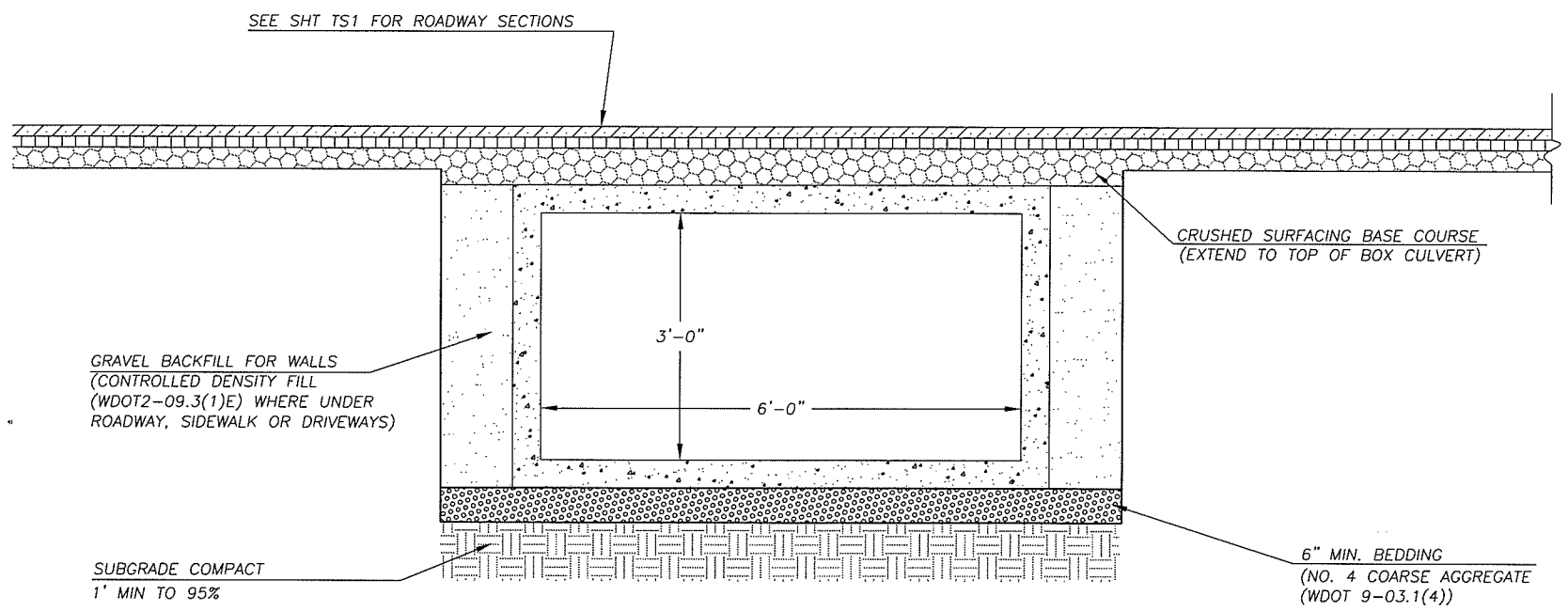

NOTES:

1. CONTRACTOR SHALL FURNISH ALL SOILS INFORMATION NECESSARY, COMPLETE STRUCTURAL DESIGN AND SUBMIT DETAILED SHOP DRAWINGS FOR ENGINEER'S REVIEW AND APPROVAL. BOTH PRE-CAST AND CAST-IN-PLACE DESIGNS ARE ACCEPTABLE, SUBJECT TO REVIEW AND APPROVAL.
2. ALL REINFORCED CONCRETE DESIGN SHALL BE TO WSDOT DESIGN MANUAL M 22-01. DESIGN SHALL BE H20 LOADING TO ASTM850
3. APPROXIMATE DEPTHS OF COVER OVER THE CENTERLINE OF THE BOX CULVERT ARE SHOWN ON THE PLAN PROFILES. THE CONTRACTOR SHALL COMPUTE MINIMUM DEPTHS OF COVER FOR DESIGN PURPOSES USING THE DETAILED GEOMETRIC INFORMATION PROVIDED ON THE ROADWAY PROFILE SHEETS AND THE TYPICAL SECTIONS.
4. PAYMENT SHALL BE BY LINEAL FOOT OF BOX CULVERT INSTALLED. ALL INVESTIGATION, DESIGN, CONCRETE, REINFORCING, BEDDING, BACKFILL, MANHOLES, BLOCKOUTS, BULKHEADS AND ALL OTHER ITEMS ARE INCIDENTAL TO THIS UNIT PRICE.

REINFORCED CONCRETE BOX CULVERT (DESIGN-BUILD)

N.T.S.

DESIGNED	JM
DRAWN	RK
CRP	381122
HOR.	NA
VERT.	NA
DATE	12/22/03
DWG:	DD6
SHEET	OF

CALL 48 HOURS BEFORE YOU DIG
1-800-553-4344
"It's the Law"
NORTHWEST UTILITIES NOTIFICATION CENTER

STATE OF WASHINGTON
MILAN J. THOMAS
REGISTERED
PROFESSIONAL ENGINEER
EXPIRES JULY 7, 2005

DESIGN & ENGINEERING DIVISION
DESIGN SECTION

NE 179TH STREET (I-5 TO NE 50TH AVE)
DRAINAGE DETAILS VI

proud past, promising future
CLARK COUNTY
WASHINGTON

N:\CIP\PROJECTS\381122-NE179th-East\DESIGN\Dwg\179thEDD6.dwg, 12/17/2003 10:28:57 AM, kerlinr

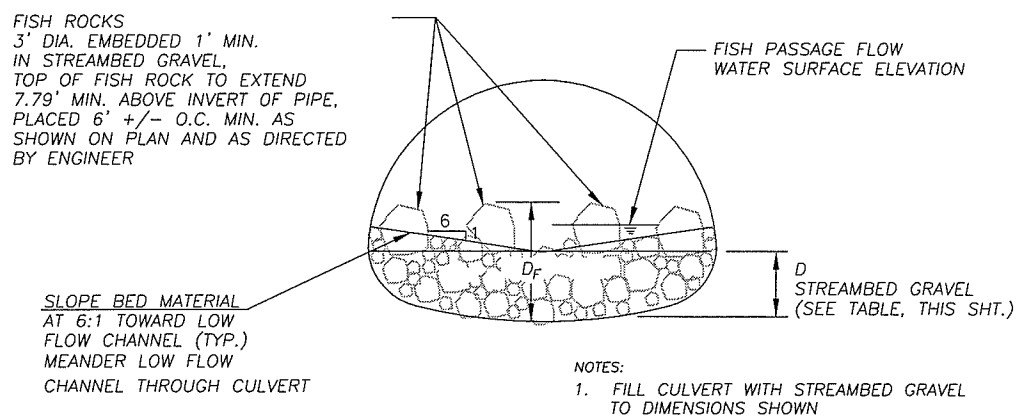

NOTES:
1. FILL CULVERT WITH STREAMBED GRAVEL TO DIMENSIONS SHOWN

CULVERT CROSS SECTION

N.T.S.

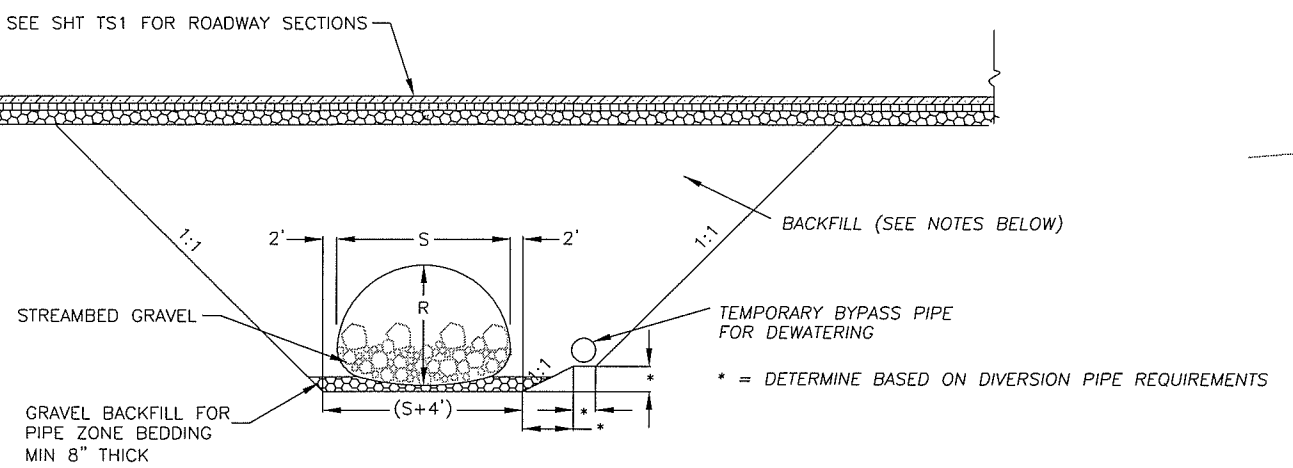

* = DETERMINE BASED ON DIVERSION PIPE REQUIREMENTS

CULVERT TRENCH DETAIL

N.T.S.

NOTES:
1. FOR STRUCTURAL PLATE PIPE ARCH, BACKFILL TO BE IMPORTED, CLEAN, WELL- GRADED GRANULAR MATERIAL (AASHTO M 145 FOR SOIL CLASSIFICATION A-1, A-2 OR A-3)
2. PIPE INSTALLATION PER MANUFACTURER'S SPECIFICATIONS. CONTACT PIPE MANUFACTURER TO PROVIDE ON-SITE ASSISTANCE PRIOR TO ASSEMBLY.
3. BACKFILL SHALL BE PLACED SYMMETRICALLY ON EACH SIDE OF THE STRUCTURE IN 6" TO 8" LIFTS.
4. PLACEMENT, BACKFILL AND COMPACTION TO BE AS DIRECTED BY ENGINEER.
5. ALL PAVING INCLUDED IN PAVEMENT BID ITEMS
6. ALL BEDDING, BACKFILL AND INSTALLATION INCLUDED IN BID ITEM FOR PIPE. FILL INSIDE PIPE PAID UNDER SEPARATE BID ITEMS.

CULVERT LOCATION	STRUCTURE TYPE	S	R	D	D_F
CULVERT #?	STRUCTURAL PLATE PIPE ARCH				
CULVERT #?	STRUCTURAL PLATE PIPE ARCH				

CULVERT DIMENSIONS

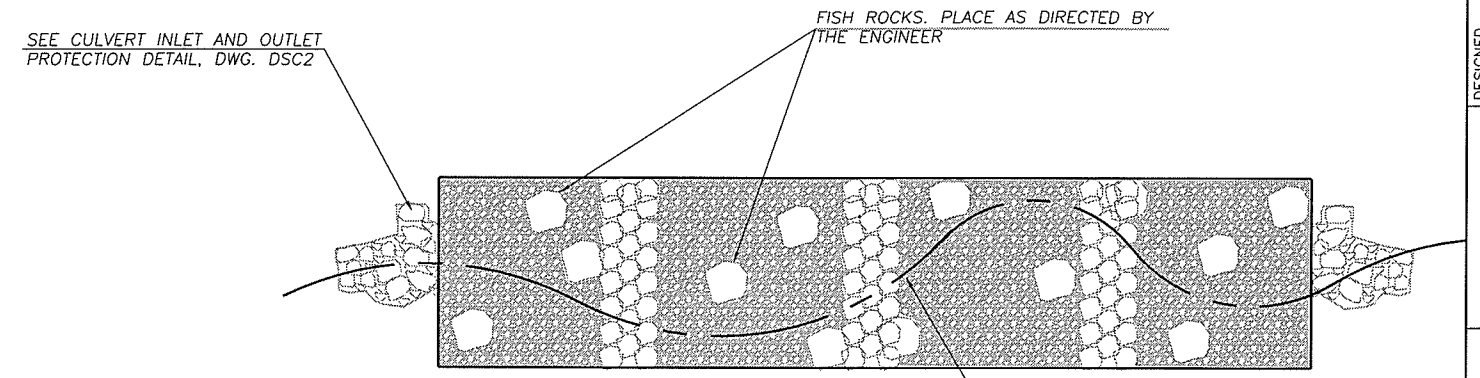

PLAN

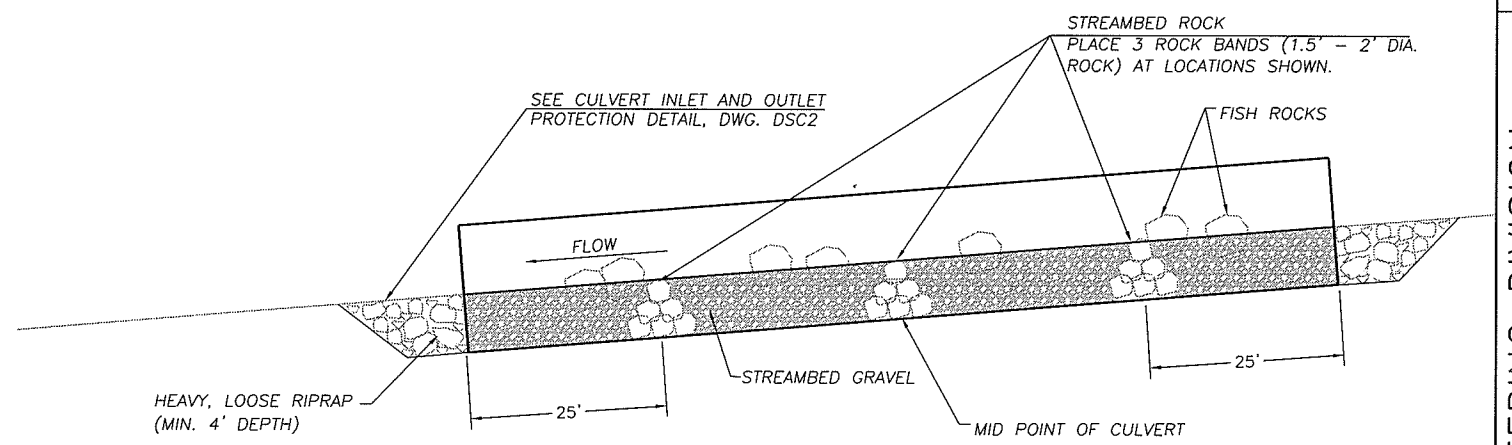

PROFILE

TYPICAL CULVERT LAYOUT

N.T.S.

SEIVE SIZE	PERCENT FINER
No. 10	50 Max.
No. 40	30 Max.
No. 100	—
No. 200	15 Max.
LIQUID LIMIT	—
PLASTICITY INDEX	6 Max.
USUAL TYPES OF SIGNIFICANT CONSTITUENT MATERIALS	Stone Fragments Gravel and Sand

BACKFILL GRADATION

CULVERT #1		CULVERT #2		CULVERT #3		CULVERT #4	
Diameter (in)	Percent Finer	Diameter (in)	Percent Finer	Diameter (in)	Percent Finer	Diameter (in)	Percent Finer
10	100	14	100	10	100	14	100
5	85-95	5	85-95	5	85-95	5	85-95
2	65-75	2	65-75	2	65-75	2	65-75
1/4	30-40	1/2	30-40	1/4	30-40	1/2	30-40
0.03	10-15	0.04	10-15	0.03	10-15	0.04	10-15

GRADATION FOR STREAMBED GRAVEL

1. STREAMBED GRAVEL TO BE WELL-GRADED GRAVEL PIT MATERIAL, QUARRIED. ANGULAR MATERIAL IS NOT ACCEPTABLE.

2. STREAMBED GRAVEL TO BE TESTED AND GRADATION CONFIRMED AT GRAVEL PIT PRIOR TO DELIVERY TO SITE.

DESIGNED	JM
DRAWN	JM
CRP	381122
HOR.	AS SHOWN
VERT.	AS SHOWN
DATE	12/22/03
DWG:	DSC1
SHEET	OF

CALL 48 HOURS BEFORE YOU DIG
1-800-553-4344
"It's the Law"
NORTHWEST UTILITIES NOTIFICATION CENTER

STATE OF WASHINGTON
JAMES L. MILNE
31148
PROFESSIONAL ENGINEER
EXPIRES: JULY 7, 2005

DESIGN & ENGINEERING DIVISION
DESIGN SECTION

NE 179TH STREET (I-5 TO NE 50TH AVE)
STREAM CROSSING DETAILS 1

proud past, promising future
CLARK COUNTY
WASHINGTON

N:\CIP\PROJECTS\381122-NE179th-East\DESIGN\Dwg\179thEDSC1.dwg, 12/16/2003 1:39:10 PM, kerlinr

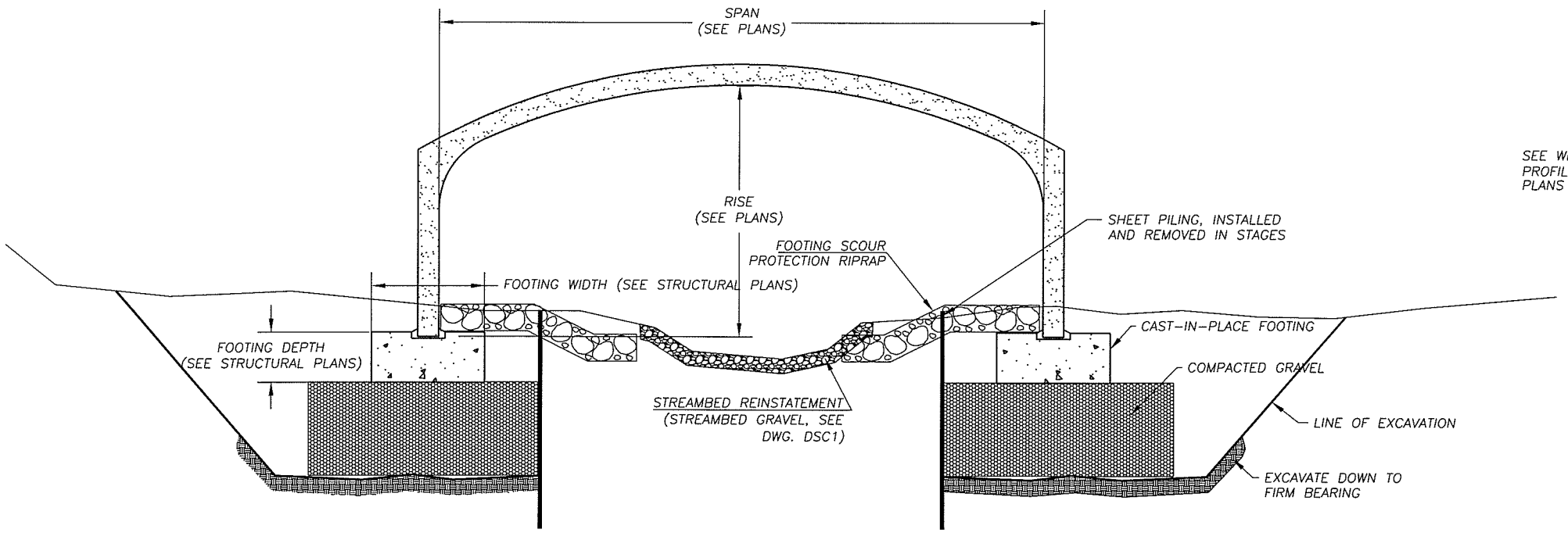

CULVERT CROSS SECTION ("CON-SPAN")

N.T.S.

NOTES:
1. SEE PLAN AND PROFILE SHEETS FOR DETAILED LAYOUT AND ELEVATION INFORMATION.
2. SEE STRUCTURAL DESIGN SHEETS FOR FOUNDATION DESIGN AND RIPRAP SCOUR PROTECTION.
3. DESIGN OF "CON-SPAN" BRIDGE STRUCTURE TO BE PROVIDED BY MANUFACTURER
4. SEE DWG. DSC3 FOR SPECIFICATIONS FOR CON-SPAN BRIDGE SYSTEMS.

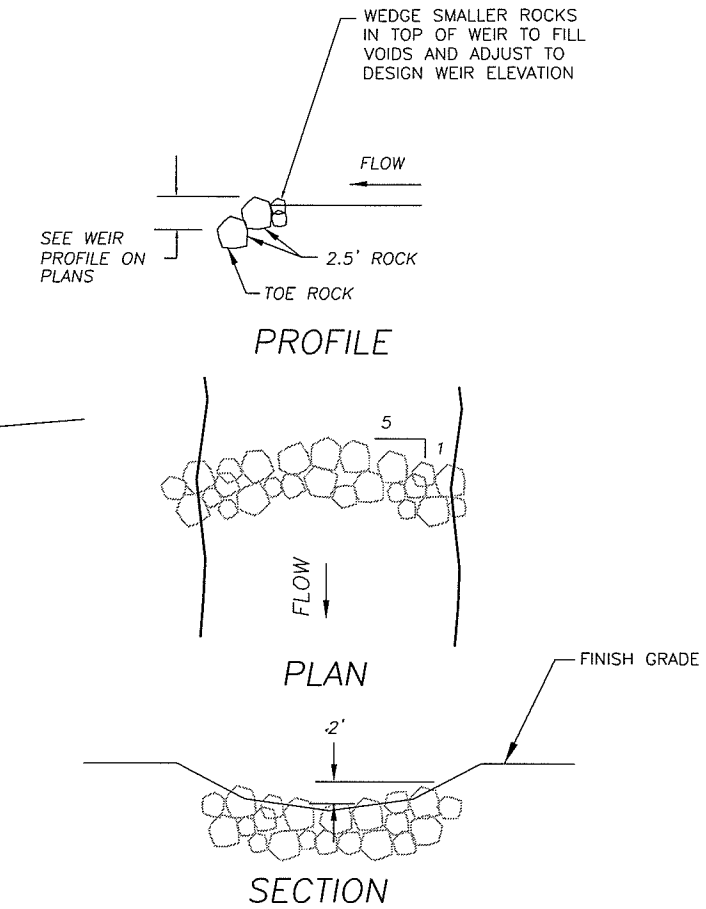

ROCK WEIR DETAIL

N.T.S.

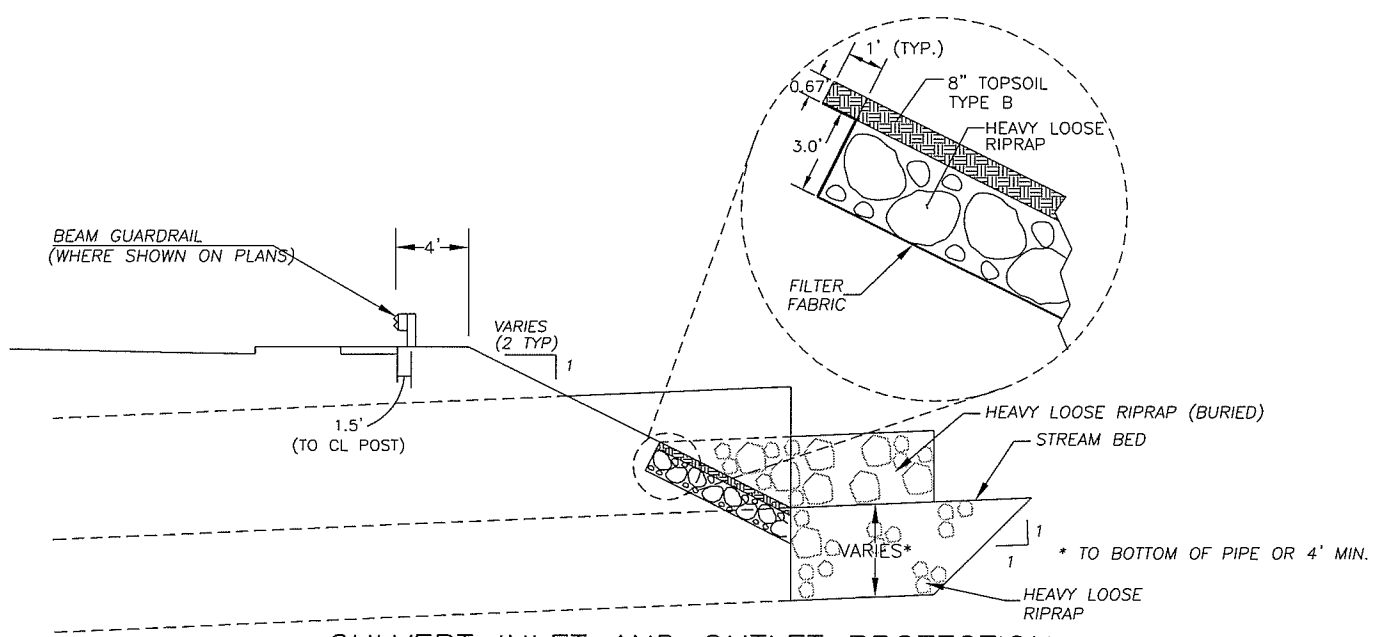

CULVERT INLET AND OUTLET PROTECTION

N.T.S.

NOTES:
1. SEE PLAN AND PROFILE SHEETS FOR DETAILED LAYOUT AND ELEVATION INFORMATION.
2. FILTER FABRIC SHALL BE CONSTRUCTION GEOTEXTILE FOR SEPARATION OR SOIL STABILIZATION TO WDOT 9-33 (TABLE-3). INSTALL LINER PER MANUFACTURER'S SPECIFICATIONS.
3. ALL COSTS FOR 8" TOPSOIL TYPE B INCLUDED IN UNIT COST FOR HEAVY LOOSE RIPRAP (BURIED).
4. FOR BEAM GUARDRAIL, SEE WSDOT STD. PLAN C-1.
5. WHERE DRIVEN BEAM MAY IMPACT CULVERT, PROVIDE 12'-6" SPAN PLACEMENT PER WDOT STD PLAN C-2K.

DESIGNED	JM
DRAWN	JM
CRP	381122
HOR.	AS SHOWN
VERT.	AS SHOWN
DATE	12/22/03
DWG:	DSC2
SHEET	OF

CALL 48 HOURS BEFORE YOU DIG
1-800-553-4344
"It's the Law"
NORTHWEST UTILITIES NOTIFICATION CENTER

STATE OF WASHINGTON
MARK E. JOHNSON
31148
PROFESSIONAL ENGINEER
EXPIRES JULY 7, 2005

DESIGN & ENGINEERING DIVISION
DESIGN SECTION

NE 179TH STREET (I-5 TO NE 50TH AVE)
STREAM CROSSING DETAILS II

proud past, promising future
CLARK COUNTY
WASHINGTON

N:\CIP\PROJECTS\381122-NE179th-East\DESIGN\Dwg\179thEDSC2.dwg, 12/16/2003 1:40:17 PM, kerlinr

SPECIFICATIONS FOR MANUFACTURE AND INSTALLATION OF CON/SPAN BRIDGE SYSTEMS

1. DESCRIPTION

This work shall consist of constructing a Con/Span culvert in accordance with these specifications and in reasonably close conformity with the lines, grades, design and dimensions shown on the plans or as established by the Engineer.

2. TYPES

Precast reinforced concrete Con/Span culverts manufactured in accordance with this specification shall be designated by span and rise.

3. MATERIALS – CONCRETE

The concrete for the culverts shall be air-entrained when installed in areas subject to freeze-thaw conditions, composed of Portland cement, fine and coarse aggregates, admixtures and water. Concrete shall contain 6 ± 2 percent air. The air entraining admixture shall conform to AASHTO M154.

3.1 Portland Cement – Shall conform to the requirements of ASTM Specifications C150-Type I, Type II, or Type III cement.

3.2 Coarse Aggregate – Shall consist of stone having a maximum size of 1 inch. Aggregate shall meet requirements for ASTM C33.

3.3 Water Reducing Admixture – The manufacturer may submit for approval by the Engineer, a water-reducing admixture for the purpose of increasing workability and reducing the water requirement for the concrete.

3.4 Calcium Chloride – The addition to the mix of calcium chloride or admixtures containing calcium chloride will not be permitted.

4. MATERIALS – STEEL REINFORCEMENT AND HARDWARE

All reinforcing steel for the culverts shall be fabricated and placed in accordance with the detailed shop drawings submitted by the manufacturer.

4.1 Steel Reinforcement – Reinforcement shall consist of welded wire fabric conforming to ASTM Specification A 185 or A 497, or deformed billet steel bars conforming to ASTM Specification A 615, Grade 60. Longitudinal distribution reinforcement may consists of welded wire fabric or deformed billet-steel bars.

5. MANUFACTURE

5.1 Mixture – The aggregates, cement and water shall be proportioned and mixed in a batch mixer to produce a homogeneous concrete meeting the strength requirements of this specification. The proportion of Portland cement in the mixture shall not be less than 564 pounds (6 sacks) per cubic yard of concrete.

5.2 Curing – The precast concrete culvert units shall be cured for a sufficient length of time so that the concrete will develop the specified compressive strength in 28 days or less. Any one of the following methods of curing or combinations thereof shall be used:

5.2.1. Steam Curing – The culverts may be low pressure, steam cured by a system that will maintain a moist atmosphere.

5.2.2. Water Curing – The culverts may be water cured by any method that will keep the sections moist.

5.2.3. Membrane Curing – A sealing membrane conforming to the requirements of ASTM Specification C 309 may be applied and shall be left intact until the required concrete compressive strength is attained. The concrete temperature at the time of application shall be within + 10 degrees F of the atmospheric temperature. All surfaces shall be kept moist prior to the application of the compounds and shall be damp when the compound is applied.

5.3 Forms – the forms used in manufacture shall be sufficiently rigid and accurate to maintain the culvert dimensions within the permissible variations given in Section 7. All casting surfaces shall be of a smooth material.

5.4 Handling – Handling devices or holes shall be permitted in each culvert for the purpose of handling and setting.

5.5 Storage – The culverts shall be stored in such a manner to prevent cracking or damage. The units shall not be stored in an upright position until the compressive strength is a minimum of 4,000 psi.

REVISED 7/21/00 SPEC1.DWG
REVISED 7/14/97 SPEC1.DWG
REVISED 4/4/96 SPEC1.DWG
REVISED 3/5/96 SPEC1.DWG
REVISED 11/14/94 SPEC1.DWG
REVISED 5-25-94 SPEC1.DWG
REVISED 9-10-93 SPEC1.DWG

6. DESIGN

6.1 The culvert dimension and reinforcement details shall be as prescribed in the plan and the shop drawings provided by the manufacturer subject to the provisions of Section 7. The minimum concrete compressive strength shall be 4,000 psi. The minimum steel yield strength shall be 60,000 psi.

The culverts are designed in accordance with the "Standard Specifications for Highway Bridges" adopted by the American Association of State Highway and Transportation Officials, 1996. A minimum of one foot of cover above the crown of the culvert is required in the installed condition. (Unless noted otherwise and designed accordingly.)

6.2 Placement of Reinforcement – The cover of concrete over the outside circumferential reinforcement shall be 2 inches minimum. The cover of concrete over the inside circumferential reinforcement shall be 1 1/2 inches minimum. The clear distance of the end circumferential wires shall not be less than one inch nor more than two inches from the ends of the culvert.
Reinforcement shall be assembled utilizing single or multiple layers of welded wire fabric, or utilizing a single layer of deformed billet-steel bars. The welded wire fabric shall be composed of circumferential and longitudinal wires meeting the spacing requirements of 6.4 and shall contain sufficient longitudinal wires extending through the culvert to maintain the shape and position of the reinforcement. Longitudinal distribution reinforcement may be welded wire fabric or deformed billet-steel bars and shall meet the spacing requirements of 6.4. The ends of the longitudinal distribution reinforcement shall be not more than 3 inches from the ends of the culvert.

6.3 Bending of Reinforcement – The outside and inside circumferential reinforcing steel for the corners of the culvert shall be bent to such an angle that is approximately equal to the configuration of the culvert's outside corner.

6.4 Laps, Welds, and Spacing – Tension splices in the circumferential reinforcement shall be made by lapping. Laps may be tack welded together for assembly purposes. For smooth welded wire fabric, the overlap shall meet the requirements of ACI 12.8 and 12.19. For deformed welded wire fabric, the overlap shall meet the requirements of ACI 12.7 and 12.18. For deformed billet-steel bars, the overlap shall meet the requirements of ACI 12.2. For splices other than tension splices, the overlap shall be a minimum of 12" for welded wire fabric or deformed billet-steel bars. The spacing center to center of the circumferential wires in a wire fabric sheet shall be not less than 2 inches nor more than 4 inches. For the wire fabric, the spacing center to center of the longitudinal wires shall not be more than 8 inches. The spacing center to center of the longitudinal distribution steel for either line of reinforcing in the top slab shall be not more than 16 inches.

7. PERMISSIBLE VARIATIONS

7.1 Internal Dimensions – The internal dimension shall vary not more than 1% from the design dimensions nor more than 1-1/2 inches whichever is less. The haunch dimensions shall vary not more than 3/4 inch from the design dimension.

7.2 Slab and Wall Thickness – The slab and wall thickness shall not be less than that shown in the design by more than 1/4 inch. A thickness more than that required in the design shall not be cause for rejection.

7.3 Length of Opposite Surfaces – Variations in laying lengths of two opposite surfaces of the culvert shall not be more than 5/8 inch in any culvert section, except where beveled ends for laying of curves are specified by the purchaser.

7.4 Length of Section – The underrun in length of a section shall not be more than 1/2 inch in any culvert.

7.5 Position of Reinforcement – The maximum variation in position of the reinforcement shall be + 1/2 inch. In no case shall the cover over the reinforcement be less than 1 inches for the outside circumferential steel or be less than 1 inch for the inside circumferential steel as measured to the external or internal surface of the culvert. These tolerances or cover requirements do not apply to mating surfaces of the joints.

7.6 Area of Reinforcement – The areas of steel reinforcement shall be the design steel areas as shown in the manufacturer's shop drawings. Steel areas greater than those required shall not be cause for rejection. The permissible variation in diameter of any reinforcement shall conform to the tolerances prescribed in the ASTM Specification for that type of reinforcement.

8. TESTING AND INSPECTION

8.1 Type of Test Specimen – Concrete compressive strength shall be determined from compression tests made on cylinders or cores. For cylinder testing a minimum of 4 cylinders shall be taken during each production run. For core testing, one core shall be cut from a culvert section selected at random from each group of 15 culverts or less of a particular size and production run. For each continuous production run, each group of 15 culverts of a single size or fraction thereof shall be considered separately for the purpose of testing and acceptance. A production run shall be considered continuous if not interrupted for more than 3 consecutive days.

8.2 Compression Testing – Cylinders shall be made and tested as prescribed by the ASTM C 39 Specification. Cores shall be obtained and tested for compressive strength in accordance with the provisions of the ASTM C 497 Specification.

8.3 Acceptability of Cylinder Tests – Failure of any of the 28 day test cylinders to meet 90 percent of the minimum compressive strength requirement can be cause for rejection.

8.4 Acceptability of Core Tests – The compressive strength of the concrete in each group of culverts as defined in 8.1 is acceptable when the core test strength is equal to or greater than the design concrete strength. When the compressive strength of the core tested is less than the design concrete strength, the culvert from which that core was taken may be recored. When the compressive strength of the recore is equal to or greater than the design concrete strength, the compressive strength of the concrete in that group of culverts is acceptable.

8.4.1 When the compressive strength of any recore is less than the design concrete strength, the culvert from which that core was taken shall be rejected. Two culverts from the remainder of the group shall be selected at random and one core shall be taken from each. If the compressive strength of both cores is equal to or greater than the design concrete strength, the compressive strength of the remainder of that group of culverts is acceptable. If the compressive strength of either of the two cores tested is less than the design concrete strength, the remainder of the group of culverts shall be rejected or, at the option of the manufacturer, each culvert of the remainder of the group shall be cored and accepted individually, and any of these culverts that have cores with less than the design concrete strength shall be rejected.

8.4.2 Plugging Core Holes – The core holes shall be plugged and sealed by the manufacturer in a manner such that the culvert will meet all of the test requirements of this specification. Culverts so sealed shall be considered satisfactory for use.

8.4.3 Test Equipment – Every manufacturer furnishing culverts under this specification shall furnish all facilities and personnel necessary to carryout the test required.

9. JOINTS

The culverts shall be produced with flat butt ends. The ends of the culvert shall be such that when the sections are laid together they will make a continuous line of culverts with a smooth interior free of appreciable irregularities, all compatible with the permissible variations – in Section 7. The joint width shall not exceed 3/4 inches.

10. WORKMANSHIP AND FINISH

The culverts shall be substantially free of fractures. The ends of the culverts shall be normal to the walls and centerline of the culvert section, within the limits of the variations given in section 7, except where beveled ends are specified. The surface of the culverts shall be a smooth steel form or troweled surface. Trapped air pockets causing surface defects shall be considered as part of a smooth steel form finish.

11. REPAIRS

Culverts may be repaired, if necessary, because of imperfections in manufacture or handling damage and will be acceptable if, in the opinion of the purchaser, the repairs are sound, properly finished and cured, and the repaired section conforms to the requirements of this specification.

12. INSPECTION

The quality of materials, the process of manufacture, and the finished culverts shall be subject to inspection by the purchaser.

13. REJECTION

Culverts shall be subject to rejection on account of any of the specification requirements. Individual culverts may be rejected because of any of the following:

13.1 Fractures or cracks passing through the wall, except for a single end crack that does not exceed one half the thickness of the wall.

13.2 Defects that indicate proportioning, mixing, and molding not in compliance with Section 5.

13.3 Honeycombed or open texture.

13.4 Damaged ends, where such damage would prevent making a satisfactory joint.

14. MARKING

Each culvert shall be clearly marked by waterproof paint. The following shall be shown on the inside of the vertical leg of the culvert section:

Culvert Section Span X Culvert Rise

Date of Manufacture

Name or trademark of the manufacturer

15. CONSTRUCTION REQUIREMENTS

15.1 Footings – the culverts shall be installed on either precast or cast-in-place concrete footings. The design size and elevation of the footings shall be as determined by the Engineer. A three inch deep keyway shall be formed in the top surface of the footing three inches clear of the inside and outside faces of the culvert, unless specified otherwise on the plans. The footings shall be given a smooth float finish and shall reach a compressive strength of 2,000 psi before placement of the culvert sections. The completed footing surface shall be constructed in accordance with grades shown on the plans. When tested with a 10 foot straight edge, the surface shall not vary more than 1/4 inch in 10 feet. If a precast concrete footing is used, the contractor shall prepare a 4 inch thick layer of compacted granular material the full width of the footing prior to placing the precast footing.

15.2 Placement of the Culverts – The culverts shall be placed as shown on the Engineer's plan drawings. Special care shall be taken in setting the culverts to the true line and grade. The culverts shall be set on 6" X 6" masonite or steel shims. A minimum of 1/2 inch gap shall be provided between the footing and the bottom of the culverts vertical legs. The gap shall be filled with cement grout (Portland cement and water or cement mortar composed of one part Portland cement and three parts of sand, by volume, and water.)

15.3 External Protection of Joints – The butt joint made by two adjoining culverts shall be covered with a 7/8" x 1 3/8" (1 1/4" round equivalent) piece of butyl rope and a minimum of a 9 inch wide joint wrap. The surface shall be free of dirt before applying the joint material. A primer compatible with the joint wrap to be used shall be applied for a minimum width of nine inches on each side of the joint. The external wrap shall be either EZ-WRAP RUBBER by PRESS-SEAL GASKET CORPORATION, SEAL WRAP by MAR MAC MANUFACTURING CO. INC. or approved equal. The joint shall be covered continuously from the bottom of one culvert section leg, across the top of the arch and to the opposite culvert section leg. Any laps that result in the joint wrap shall be a minimum of six inches long with the overlap running downhill.

In addition to the joints between units, the joint between the end unit and the headwall shall also be sealed. If using precast wingwalls, the joint between the end bridge unit and the wingwall shall be sealed with this type of wrap or at the discretion of the Engineer, filter fabric shall be substituted.

During the backfilling operation, care shall be taken to keep the joint wrap in its proper location over the joint.

15.4 Backfill – Backfill shall be considered as all replaced excavation and new embankment adjacent to the Con/Span bridge units and wingwalls. The project construction and material specifications which include the specifications for excavation for structures and roadway excavation and embankment construction shall apply except as modified in this section.

No backfill shall be placed against any structural elements until they have been approved by the Engineer.

Backfill against a waterproofed surface shall be placed carefully to avoid damage to the waterproofing material.

Mechanical tampers or approved compacting equipment shall be used to compact all backfill and embankment immediately adjacent to each side of the culvert and over the top of the culvert until it is covered to a minimum depth of one foot. The backfill within four feet of each side of the culvert shall be placed in lifts of eight inches or less (loose depth). Heavy compaction equipment shall not be operated in this area or over the culvert until it is covered to a depth of one foot.

Lightweight dozers and graders may be operated over culverts having one foot of compacted cover, but heavy earth moving equipment (larger than a D-4 Dozer weighing in excess of 12 tons and having track pressures of eight psi or greater) shall require two feet of cover unless the design cover is less than two feet. In no case shall equipment operating in excess of the design load (HS20 or HS25) be permitted over the culvert unless approved by Con/Span.

Any additional fill and subsequent excavation required to provide this minimum cover shall be made at no additional cost to the project.

As a precaution against introducing unbalanced stresses in the culvert, when placing backfill at no time shall the difference between the heights of fill on opposite sides of the culvert exceed 24".

Backfill in front of wingwalls shall be carried to ground lines shown in the plans.

BACKFILL DESCRIPTION

Group Classification	A-1: A-1-a	A-1: A-1-b	A-3	A-2: A-2-4	A-2: A-2-5	A-2: A-2-6	A-2: A-2-7	A-4
Sleeve Analysis, Percent Passing								
No. 10	50 max.							
No. 40	30 max.	50 max.	51 max.					
No. 200	15 max.	25 max.	10 max.	35 max.	35 max.	35 max.	35 max.	36 min.
Characteristics of Fraction Passing No. 40								
Liquid Limit				40 max.	41 min.	40 max.	41 min.	40 max.
Plasticity Index	6 max.		N.P.	10 max.	10 max.	11 min.	11 min.	10 max.
Usual Types of Significant Constituent Materials	Stone Fragments, Gravel & Sand		Fine Sand	Silty or Clayey Gravel and Sand				Silty Soils
General Rating as Subgrade			Excellent to Good					Fair to Poor

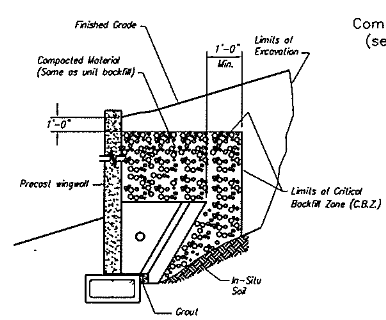

WINGWALL BACKFILL REQUIREMENTS

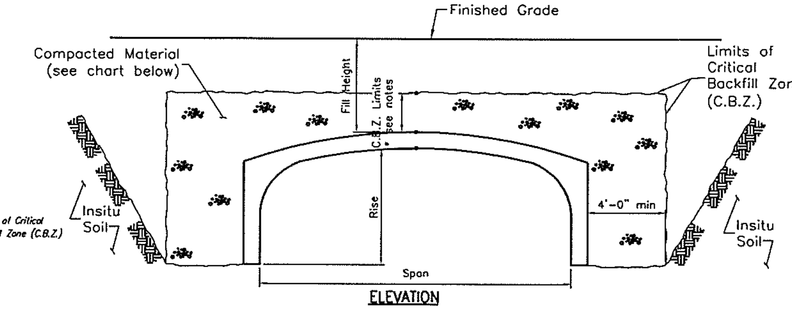

ELEVATION

NOTES
1. SEE CON/SPAN SPECIFICATIONS SECTION 15.4 FOR BACKFILL SPECIFICATIONS.
*2. FOR FILL HEIGHTS GREATER THAN 2'-0", C.B.Z. LIMIT SHALL BE 2'-0" ABOVE ARCH CROWN. FOR FILL HEIGHTS LESS THAN 2'-0", THE FINISHED GRADE SHALL BE THE BOUNDARY LINE FOR THE C.B.Z.
3. BACKFILLING OPERATIONS WITHIN THE C.B.Z. SHALL BE PERFORMED IN LIFTS OF 8" OR LESS (LOOSE DEPTH).
4. MAXIMUM DRY DENSITY SHALL BE DETERMINED BY AASHTO T-99 OR OTHER APPROVED METHODS.
5. BACKFILL SHALL BE COMPACTED IN LAYERS UNTIL THE DENSITY IS NOT LESS THAN 95% OF THE MAXIMUM DRY DENSITY.

SPAN	FILL HEIGHT	ACCEPTABLE MATERIAL INSIDE C.B.Z.	ACCEPTABLE MATERIAL OUTSIDE C.B.Z.
≤ 24'-0"	≥ 12'-0"	A1, A3	**
	< 12'-0"		**
≤ 24'-0"		A1, A2, A3, A4	
> 24'-0"	ALL	A1, A3	**

** EMBANKMENT MATERIAL PER PROJECT SPECIFICATIONS

BACKFILL REQUIREMENTS

NOTICE
The design and information shown on this drawing is provided as a service to the project owner, engineer and contractor by CON/SPAN Bridge Systems Incorporated. They are intended for use in the design and construction of the project in conjunction with CON/SPAN Bridge Systems Incorporated. Any unauthorized use or reproduction of this information is strictly prohibited. CON/SPAN Bridge Systems Incorporated.

If discrepancies between the supplied information and actual field conditions are encountered as site work progresses, these discrepancies must be reported to CON/SPAN Bridge Systems Incorporated, immediately for re-evaluation of the design. CON/SPAN Bridge Systems Incorporated accepts no liability for designs based on inaccurate information supplied by others.

The CON/SPAN Arch Culvert and wingwalls are protected by one or more of the following U.S. Patent Numbers 4595314, 4687371, 4797030, 4854775, 4993872.

CLARK COUNTY WASHINGTON
proud past, promising future

DESIGN & ENGINEERING DIVISION
DESIGN SECTION

NE 179TH STREET (I-5 TO NE 50TH AVE)
STREAM CROSSING DETAILS III

JOHN MILNE, STATE OF WASHINGTON, 31148, REGISTERED PROFESSIONAL ENGINEER
EXPIRES JULY 7, 2005

CALL 48 HOURS BEFORE YOU DIG
1-800-553-4344
"It's the Low"
NORTHWEST UTILITIES NOTIFICATION CENTER

DESIGNED	JM
DRAWN	JM
CRP	381122
HOR.	AS SHOWN
VERT.	AS SHOWN
DATE	12/22/03
DWG:	DSC3
SHEET	OF

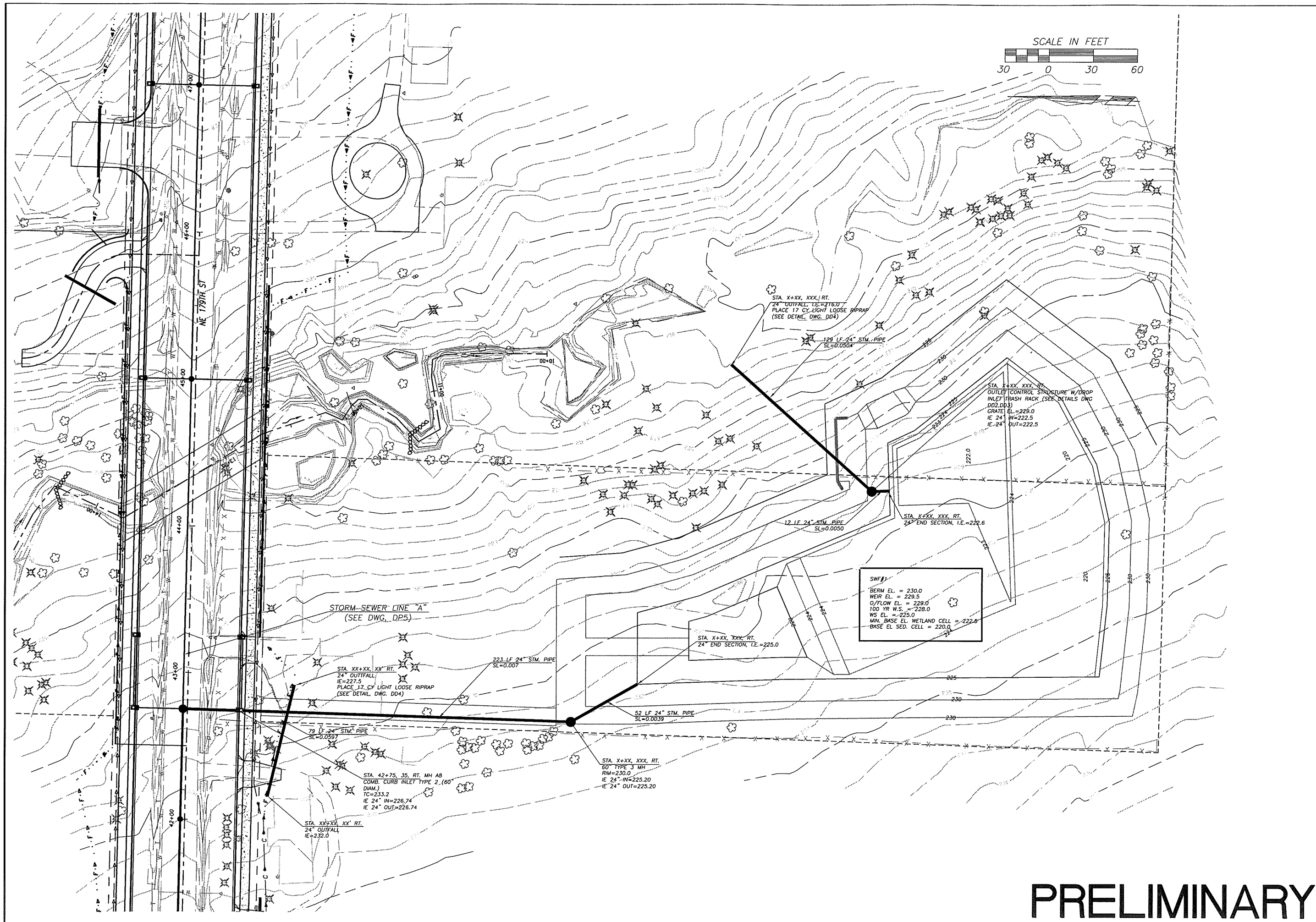

PRELIMINARY

DESIGNED	JM
DRAWN	JM
CRP	381122
HOR.	30
VERT.	NA
DATE	12/22/03
DWG:	SWF1
SHEET X	OF X

CALL 48 HOURS BEFORE YOU DIG
1-800-553-4344
"It's the Law"
NORTHWEST UTILITIES NOTIFICATION CENTER

STEVEN M. OTTO WASHINGTON 31148 PROFESSIONAL ENGINEER
EXPIRES JULY 7, 2005

DESIGN & ENGINEERING DIVISION
DESIGN SECTION

NE 179TH STREET (I-5 TO NE 50TH AVE)
STORMWATER FACILITY #1

proud past, promising future
CLARK COUNTY WASHINGTON

N:\CIP\PROJECTS\381122-NE179th-East\DESIGN\Dwg\179thEswf1-4.dwg, 12/17/2003 10:11:53 AM, kurlinr

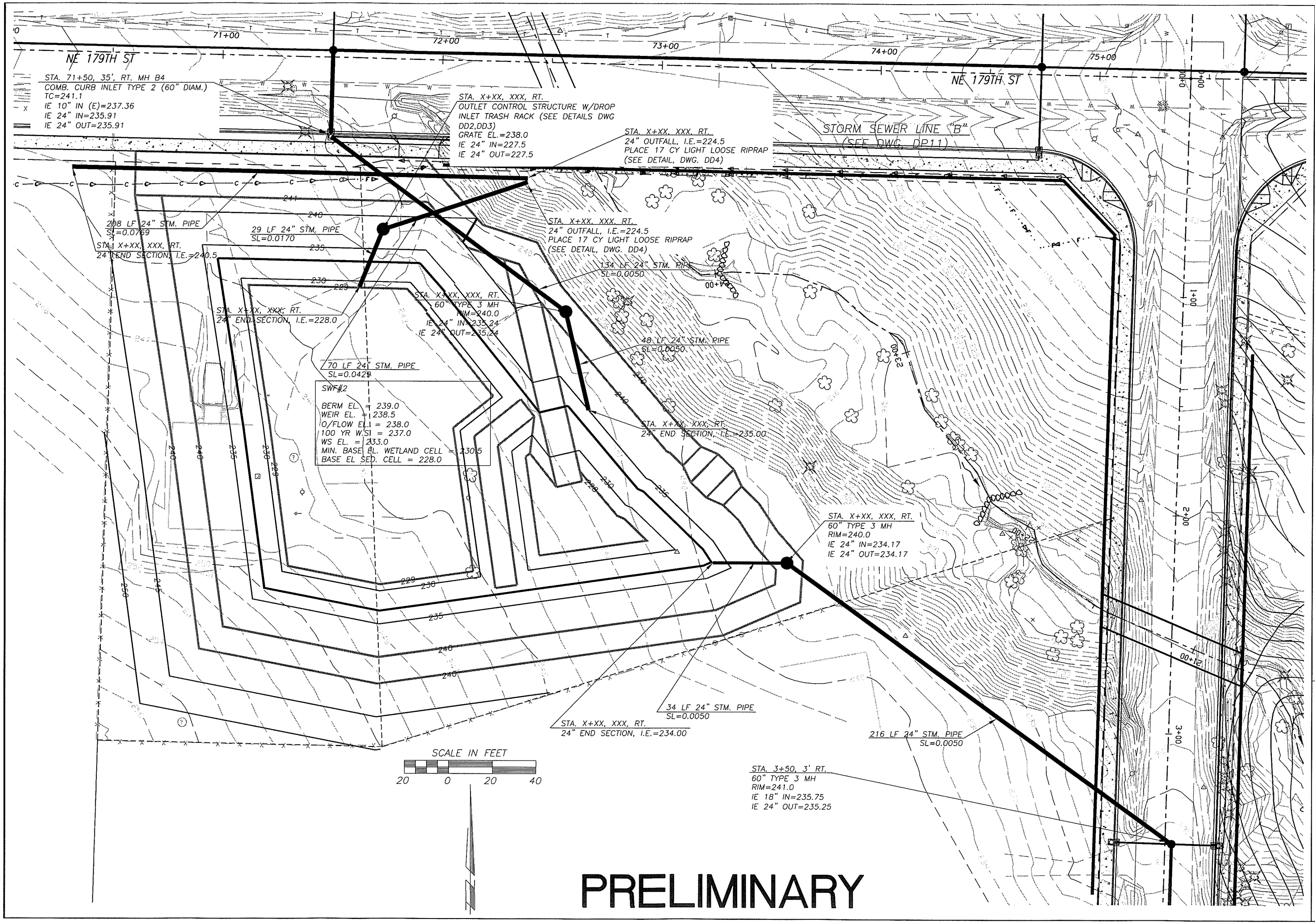

DESIGNED	JM
DRAWN	JM
CRP	381122
HOR.	20
VERT.	NA
DATE	12/22/03
DWG:	SWF2
SHEET X	OF X

CALL 48 HOURS BEFORE YOU DIG
1-800-553-4344
"It's the Law"
NORTHWEST UTILITIES NOTIFICATION CENTER

STATE OF WASHINGTON
JOHN D. MILLER
PROFESSIONAL ENGINEER
EXPIRES JULY 7, 2005

DESIGN & ENGINEERING DIVISION
DESIGN SECTION

NE 179TH STREET (I-5 TO NE 50TH AVE)
STORMWATER FACILITY #2

proud past, promising future
CLARK COUNTY
WASHINGTON

N:\CIP\PROJECTS\381122-NE179th-East\DESIGN\Dwg\179thEswf1-4.dwg, 12/17/2003 9:16:22 AM, kerlinr

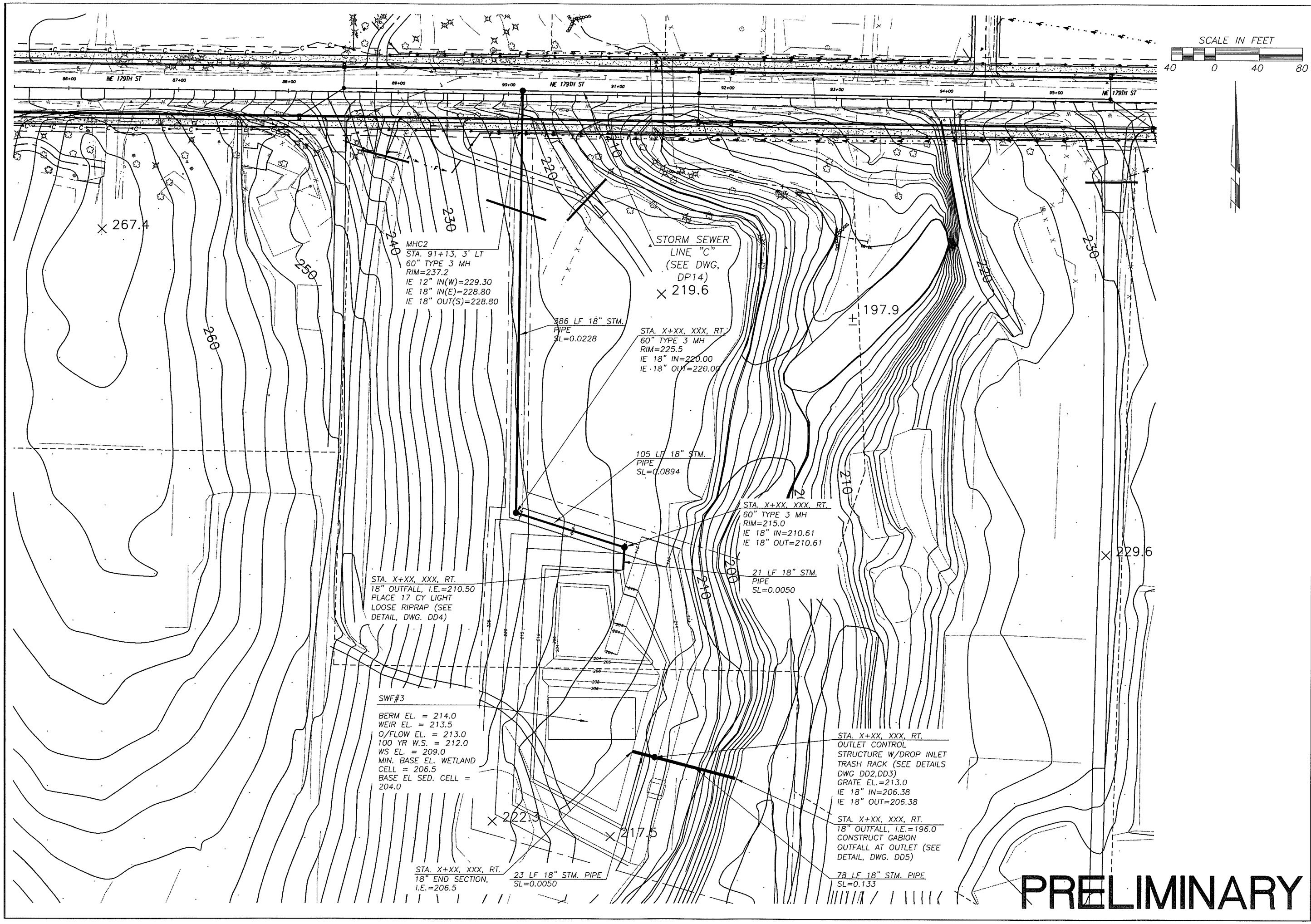

DESIGNED	JM
DRAWN	JM
CRP	381122
HOR.	30
VERT.	NA
DATE	12/22/03
DWG:	SWF3
SHEET X	OF X

CALL 48 HOURS BEFORE YOU DIG
1-800-553-4344
"It's the Law"
NORTHWEST UTILITIES NOTIFICATION CENTER

EXPIRES JULY 7, 2005

DESIGN & ENGINEERING DIVISION
DESIGN SECTION

NE 179TH STREET (I-5 TO NE 50TH AVE)
STORMWATER FACILITY #3

proud past, promising future
CLARK COUNTY WASHINGTON

N:\CIP\PROJECTS\381122-NE179th-East\DESIGN\Dwg\179thEswf1-4.dwg, 12/17/2003 9:55:48 AM, kerlinr

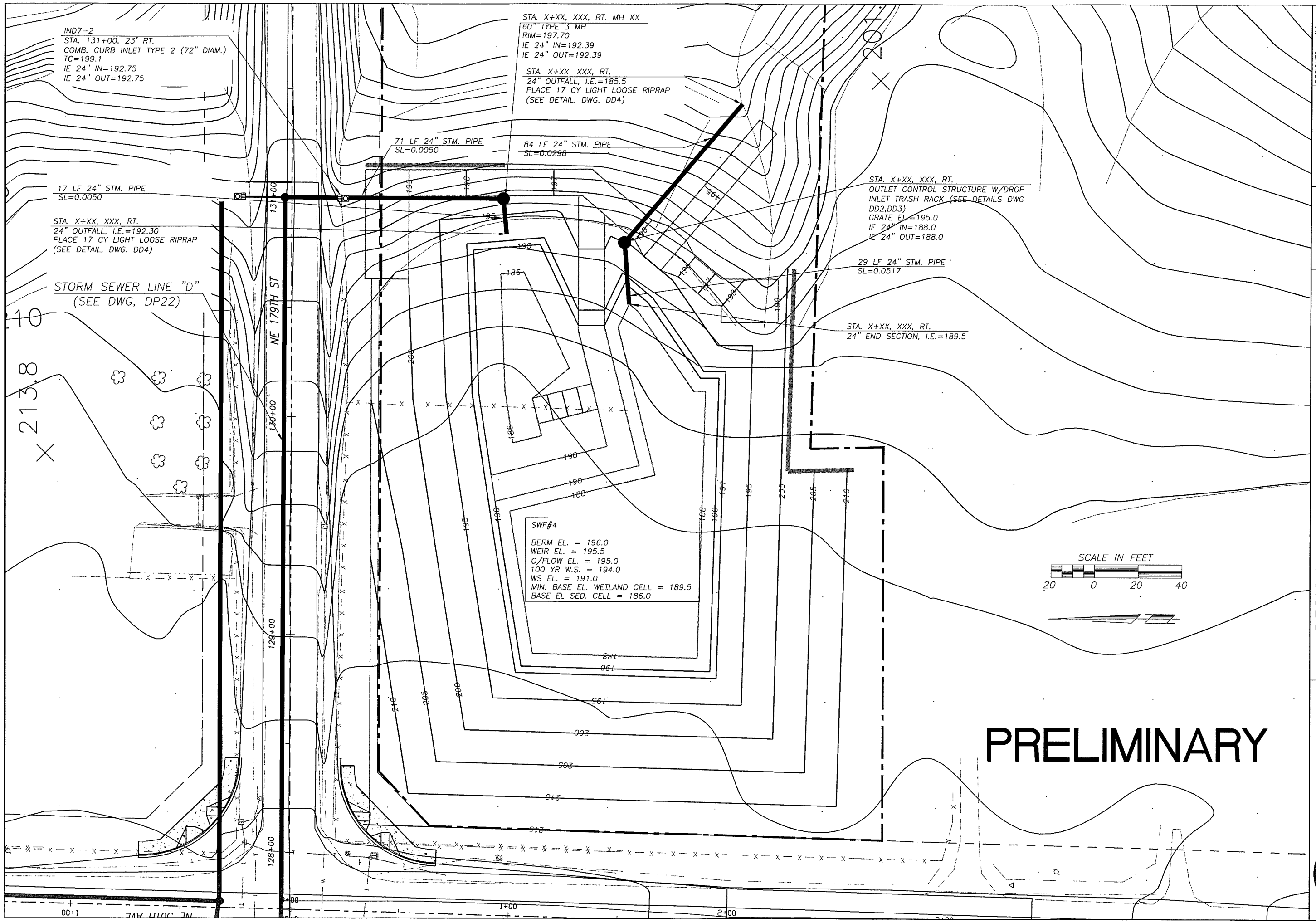

DESIGNED	JM
DRAWN	JM
CRP	381122
HOR.	20
VERT.	NA
DATE	12/22/03
DWG:	SWF4
SHEET X	OF X

CALL 48 HOURS BEFORE YOU DIG
1-800-553-4344
"It's the Law"
NORTHWEST UTILITIES NOTIFICATION CENTER

JOHN MILLINE
STATE OF WASHINGTON
31146
REGISTERED PROFESSIONAL ENGINEER
EXPIRES: JULY 7, 2005

DESIGN & ENGINEERING DIVISION
DESIGN SECTION

NE 179TH STREET (I-5 TO NE 50TH AVE)
STORMWATER FACILITY #4

proud past, promising future
CLARK COUNTY
WASHINGTON

N:\CIP\PROJECTS\381122-NE179th-East\DESIGN\Dwg\179thEswfl-4.dwg, 12/17/2003 10:09:47 AM, kerlinr

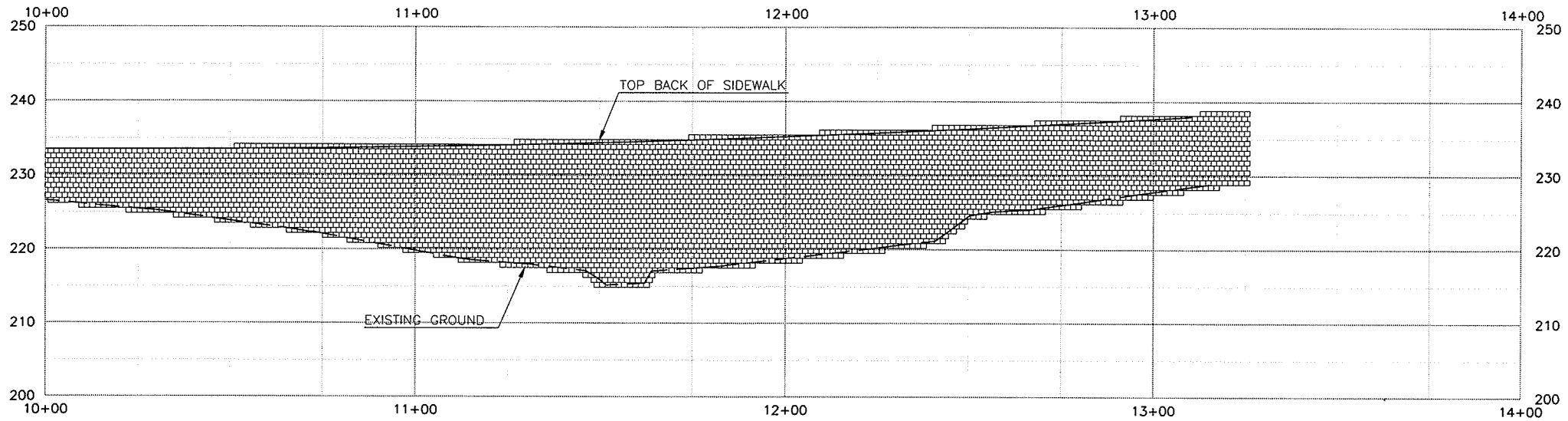

WALL 1

STA 42+50 TO 45+75 (LT SIDE)

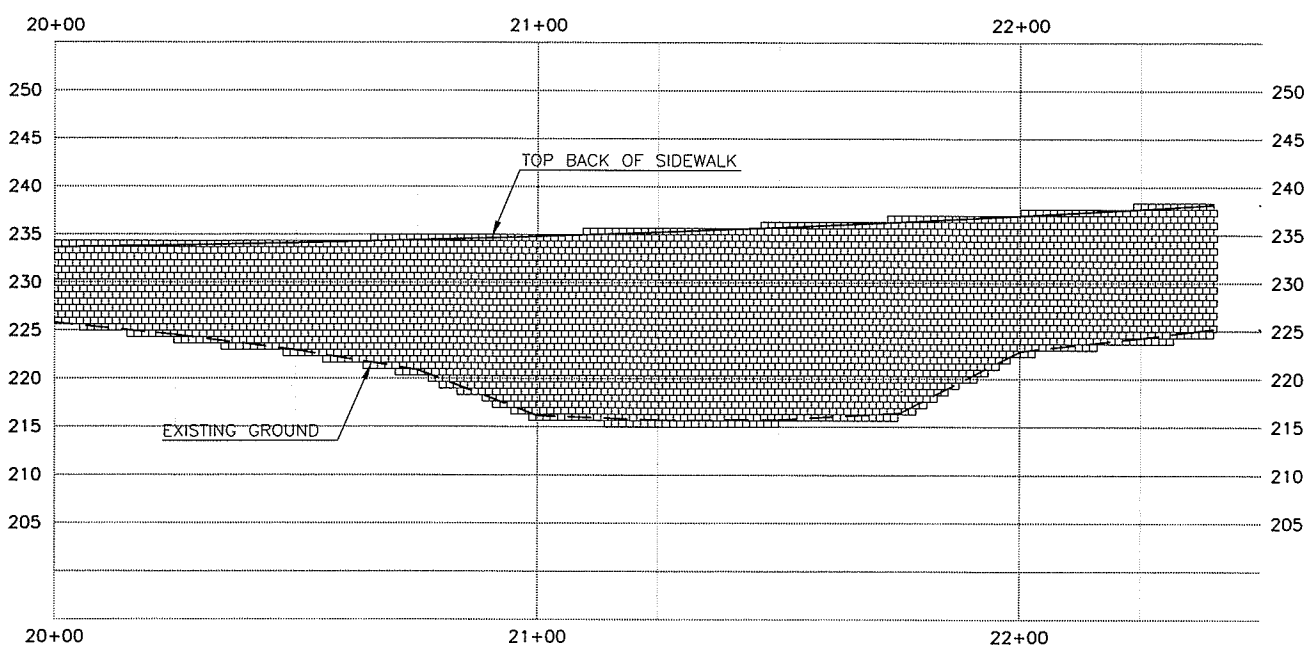

WALL 2

STA 43+25 TO 45+65 (RT SIDE)

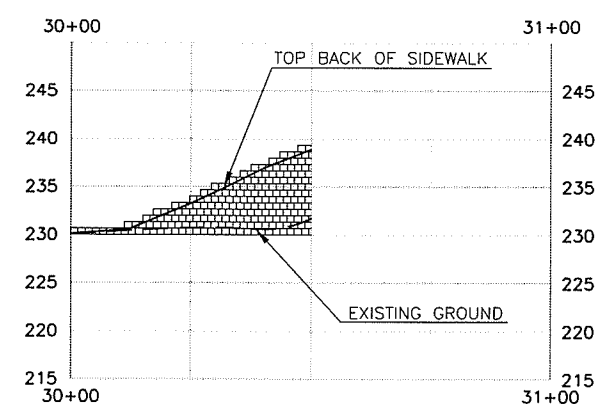

WALL 3

STA 45+71.06 TO 46+00.79 (LT SIDE)

DESIGNED	MME
DRAWN	KB
CRP	381122
HOR.	1"=20'
VERT.	1"=5'
DATE	12/22/03
DWG:	W01
SHEET	OF

CALL 48 HOURS BEFORE YOU DIG 1-800-553-4344 "It's the Law" NORTHWEST UTILITIES NOTIFICATION CENTER

MICHAEL M. ERDICE STATE OF WASHINGTON 29630 REGISTERED PROFESSIONAL ENGINEER

EXPIRES MAY 26, 2005

DESIGN & ENGINEERING DIVISION
DESIGN SECTION

NE 179TH STREET (I-5 TO NE 50TH AVE)
RETAINING WALLS

proud past, promising future

CLARK COUNTY WASHINGTON

N:\CIP\PROJECTS\381122-NE179th-East\DESIGN\Dwg\179THW01-7.dwg, 12/18/2003 6:16:17 AM, kerlinr

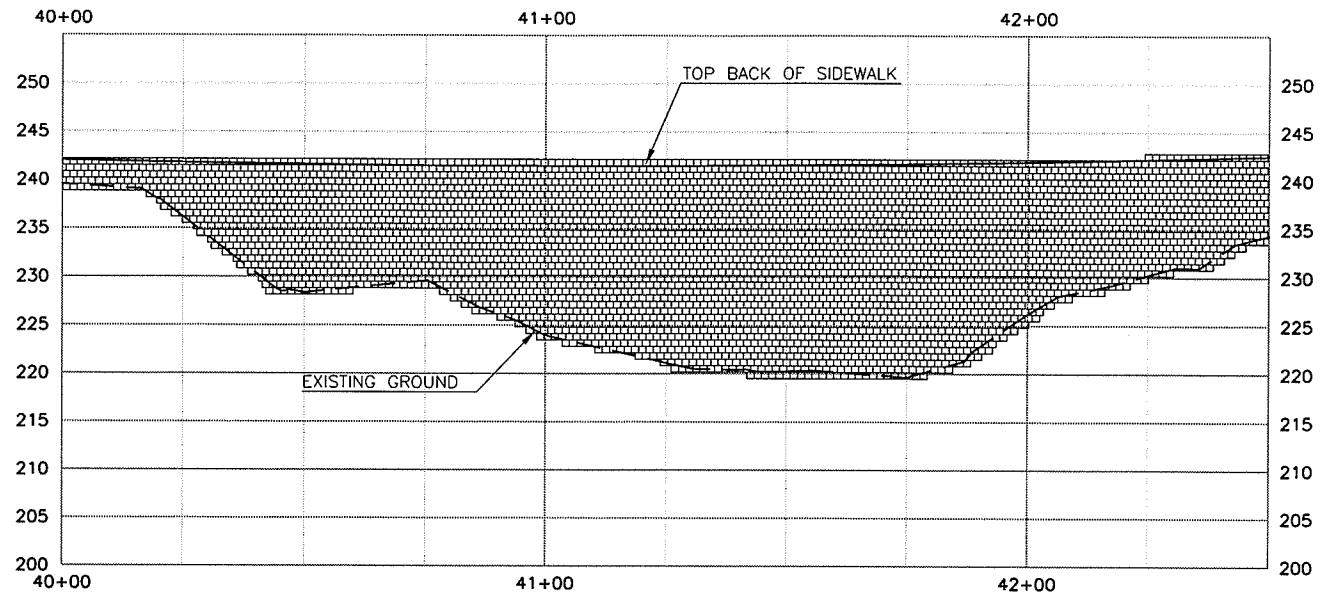

WALL 4

STA 70+50 TO 73+00 (LT SIDE)

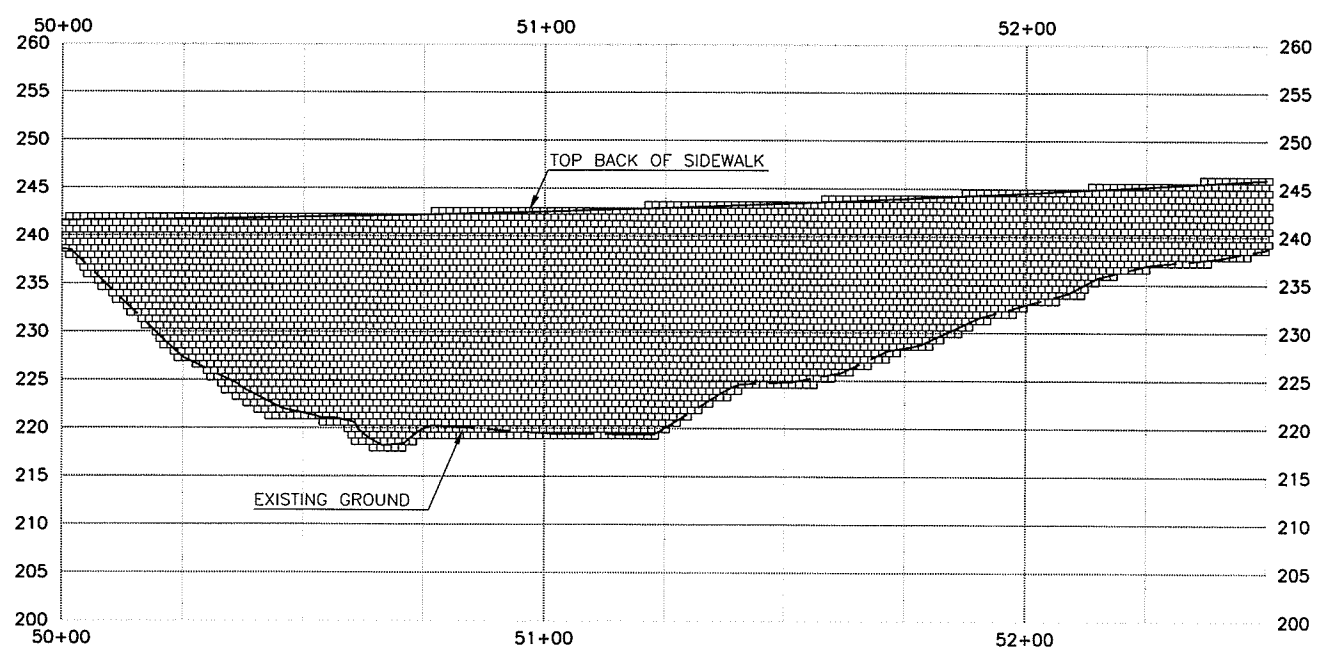

WALL 5

STA 72+00 TO 74+50 (RT SIDE)

DESIGNED	MME
DRAWN	KB
CRP	381122
HOR.	1"=20'
VERT.	1"=5'
DATE	12/22/03
DWG:	W02
SHEET	OF

CALL 48 HOURS BEFORE YOU DIG
1-800-553-4344
"It's the Law"
NORTHWEST UTILITIES NOTIFICATION CENTER

MICHAEL M. ERDICK
STATE OF WASHINGTON
29035
PROFESSIONAL ENGINEER
EXPIRES MAY 26, 2005

DESIGN & ENGINEERING DIVISION
DESIGN SECTION

NE 179TH STREET (I-5 TO NE 50TH AVE)
WALLS

proud past, promising future
CLARK COUNTY
WASHINGTON

N:\CIP\PROJECTS\381122-NE179th-East\DESIGN\Dwg\179THW01-7.dwg, 12/18/2003 6:16:46 AM, kerlinr

N:\CIP\PROJECTS\38\122-NE179th-East\DESIGN\Dwg\179THW01-7.dwg, 12/18/2003 6:17:22 AM, kerlinr

WALL 8

STA 79+50 TO 80+25 (RT SIDE)

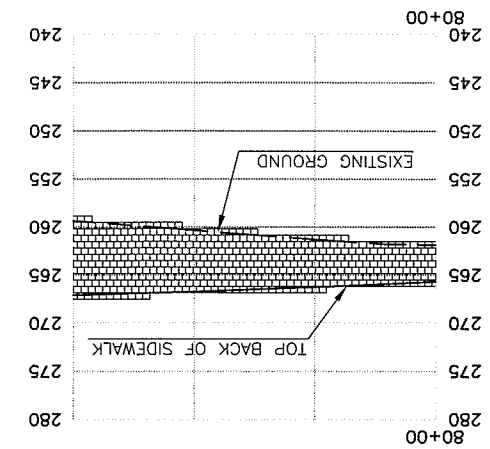

WALL 9

STA 82+00 TO 85+00 (LT SIDE)

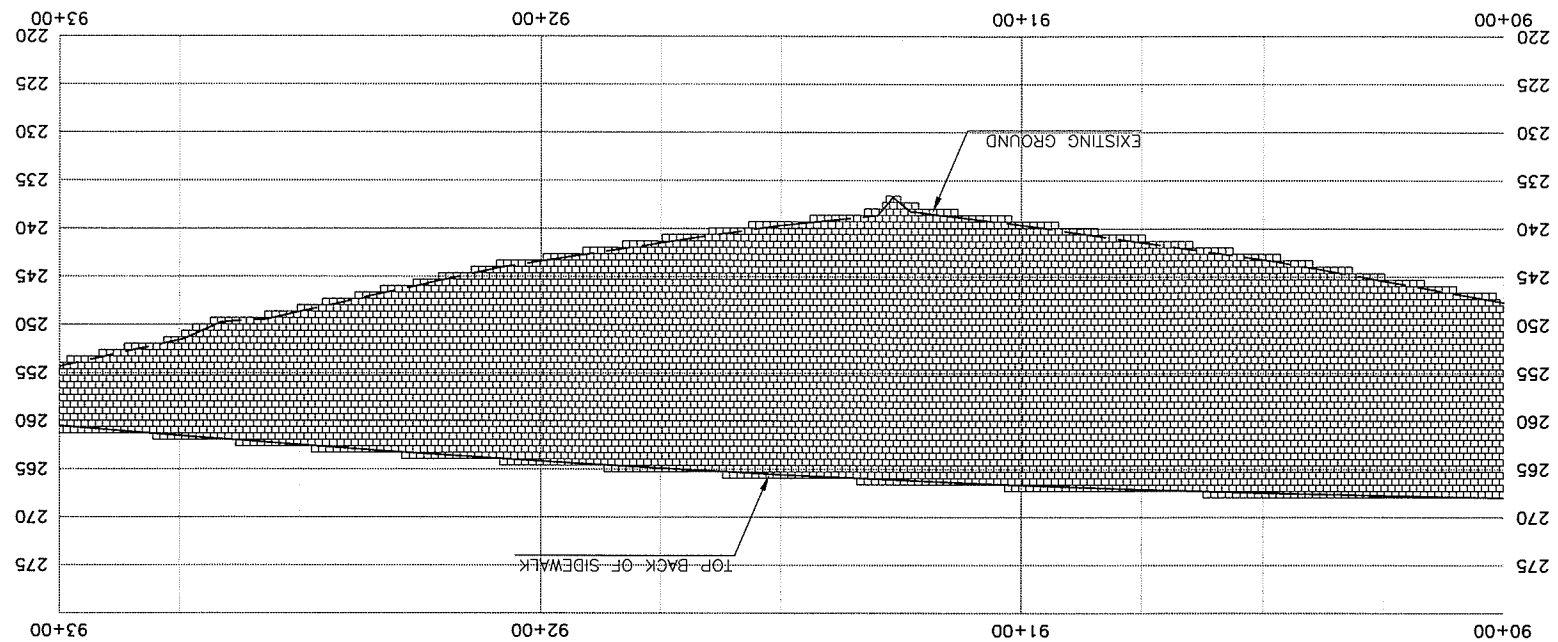

WALL 6

STA 75+72.3 TO 78+23.5 (LT SIDE)

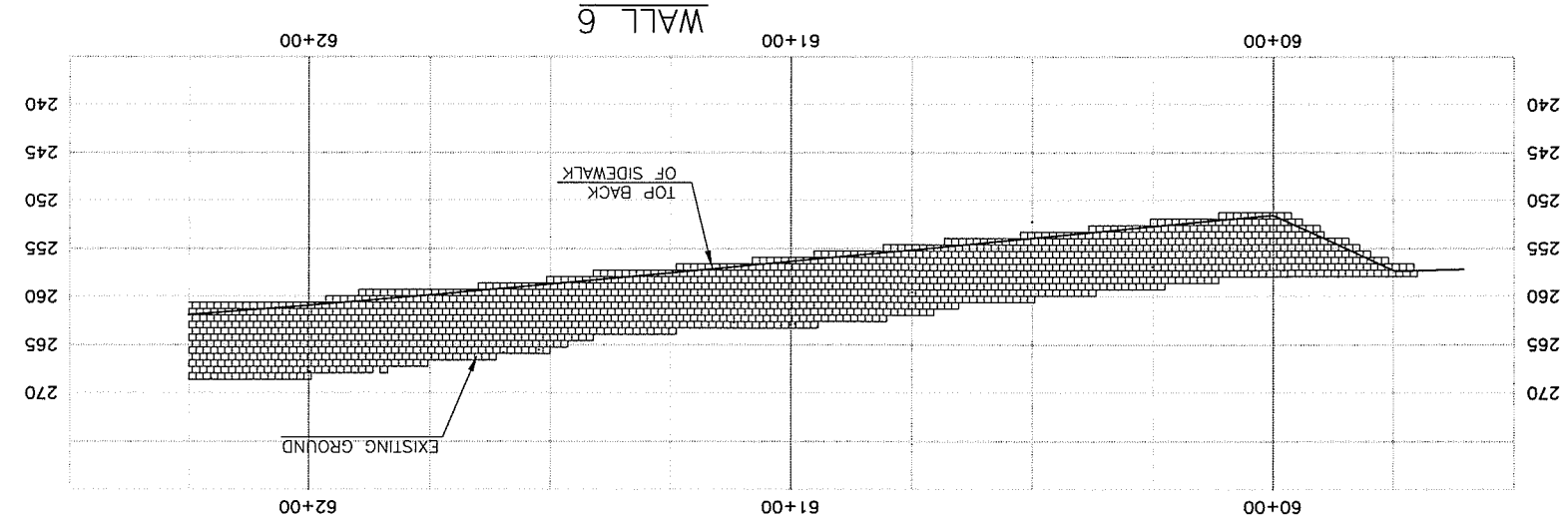

WALL 7

STA 78+47 TO 79+00 (LT SIDE)

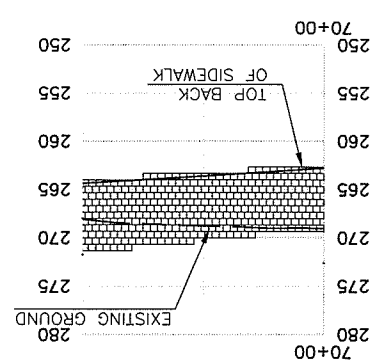

DESIGN & ENGINEERING DIVISION

DESIGN SECTION

NE 179TH STREET (I-5 TO NE 50TH AVE)
RETAINING WALLS

CLARK COUNTY WASHINGTON
proud past, promising future

MICHAEL M. KERLINR
STATE OF WASHINGTON
38122
REGISTERED PROFESSIONAL ENGINEER
EXPIRES MAY 28, 2003

CALL 48 HOURS BEFORE YOU DIG
1-800-553-4344
"It's the Law"
NORTHWEST UTILITIES NOTIFICATION CENTER

DESIGNED	MME		
DRAWN	KB		
CRP	38122		
HOR.	1"=20'		
VERT.	1"=5'		
DATE	12/22/03		
DWG:	WO3		
SHEET		OF	

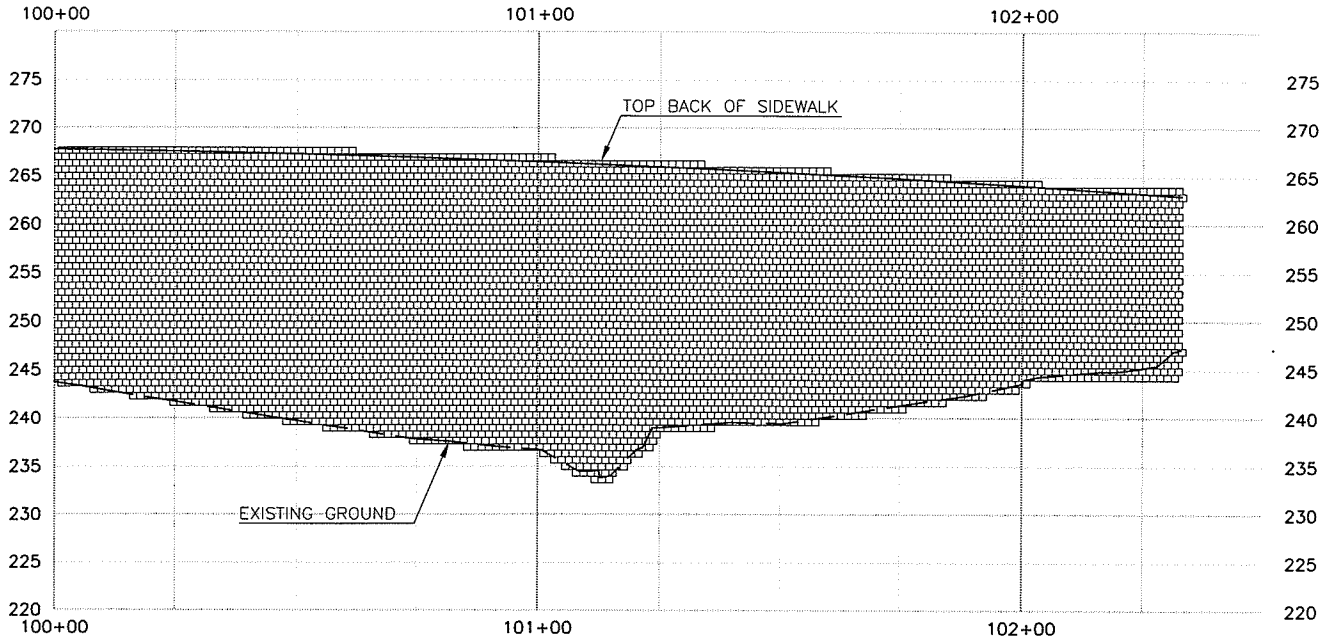

WALL 10

STA 82+00 TO 84+33 (RT SIDE)

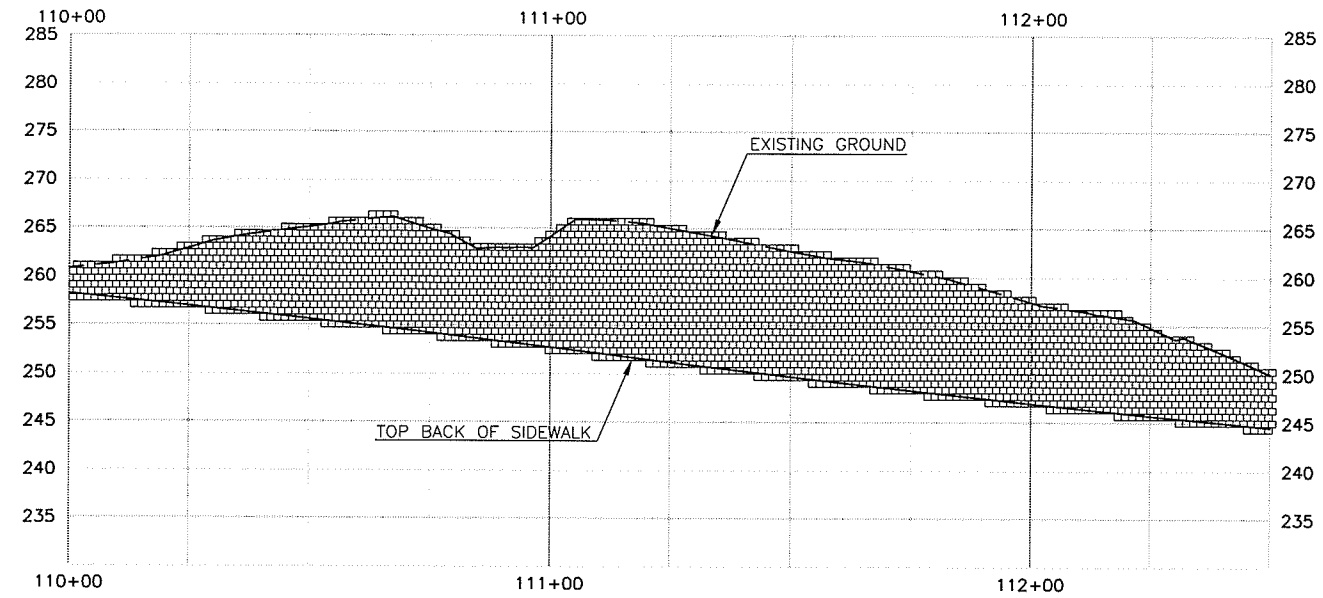

WALL 11

STA 85+50 TO 88+00 (RT SIDE)

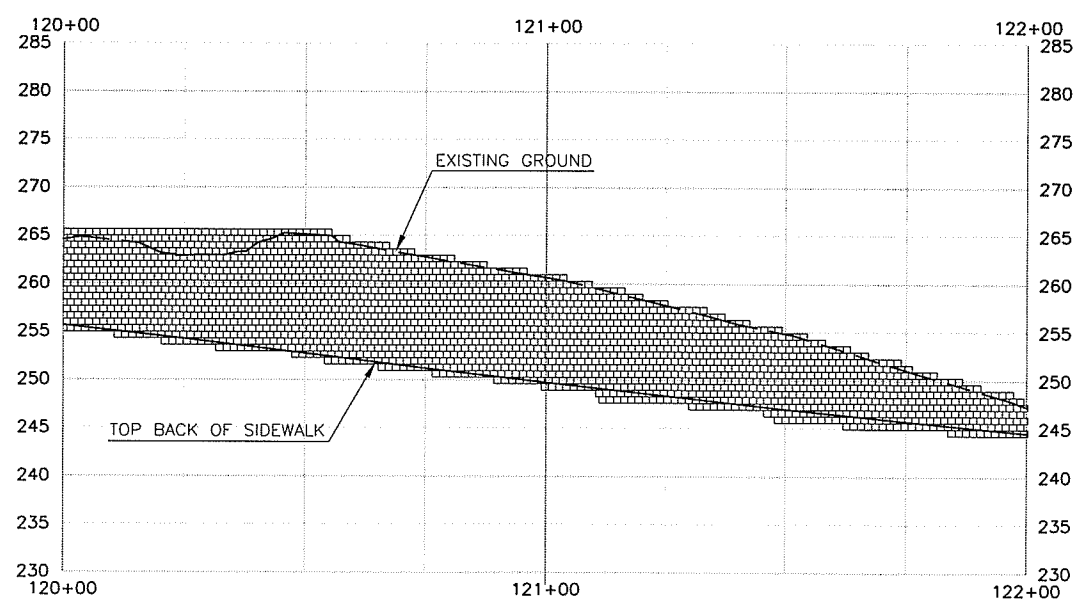

WALL 12

STA 86+00 TO 88+00 (LT SIDE)

DESIGNED	MME
DRAWN	KB
CRP	381122
HOR.	1"=20'
VERT.	1"=5'
DATE	22/22/03
DWG:	W04
SHEET	OF

CALL 48 HOURS BEFORE YOU DIG
1-800-553-4344
"It's the Law"
NORTHWEST UTILITIES NOTIFICATION CENTER

STATE OF WASHINGTON
BRIAN M. EDWICK
29320
REGISTERED PROFESSIONAL ENGINEER
EXPIRES: MAY 26, 2005

DESIGN & ENGINEERING DIVISION
DESIGN SECTION

NE 179TH STREET (I-5 TO NE 50TH AVE)
RETAINING WALLS

proud past, promising future
CLARK COUNTY
WASHINGTON

N:\CIP\PROJECTS\381122-NE179th-East\DESIGN\Dwg\179THW01-7.dwg, 12/18/2003 6:18:05 AM, kerlinr

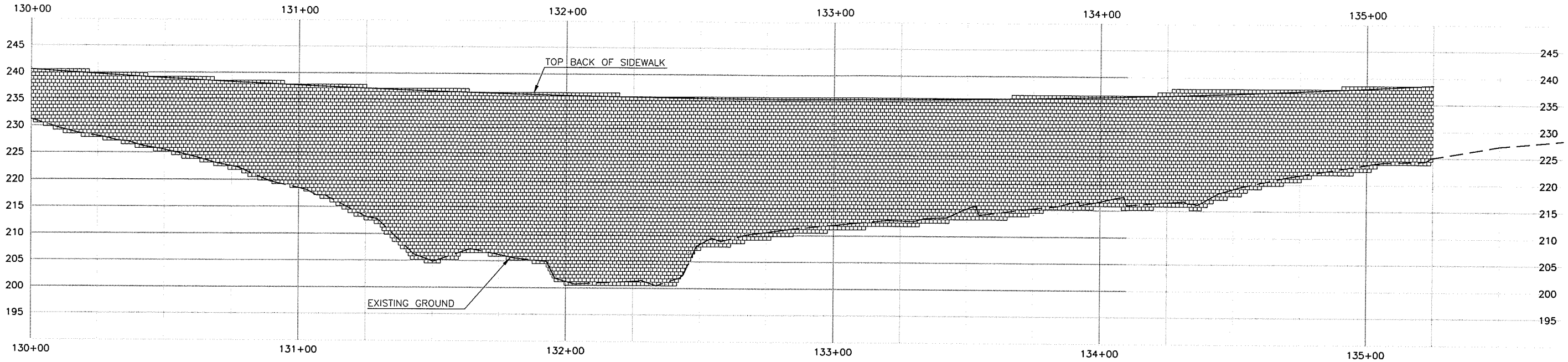

WALL 13

STA 89+00 TO 94+25 (LT SIDE)

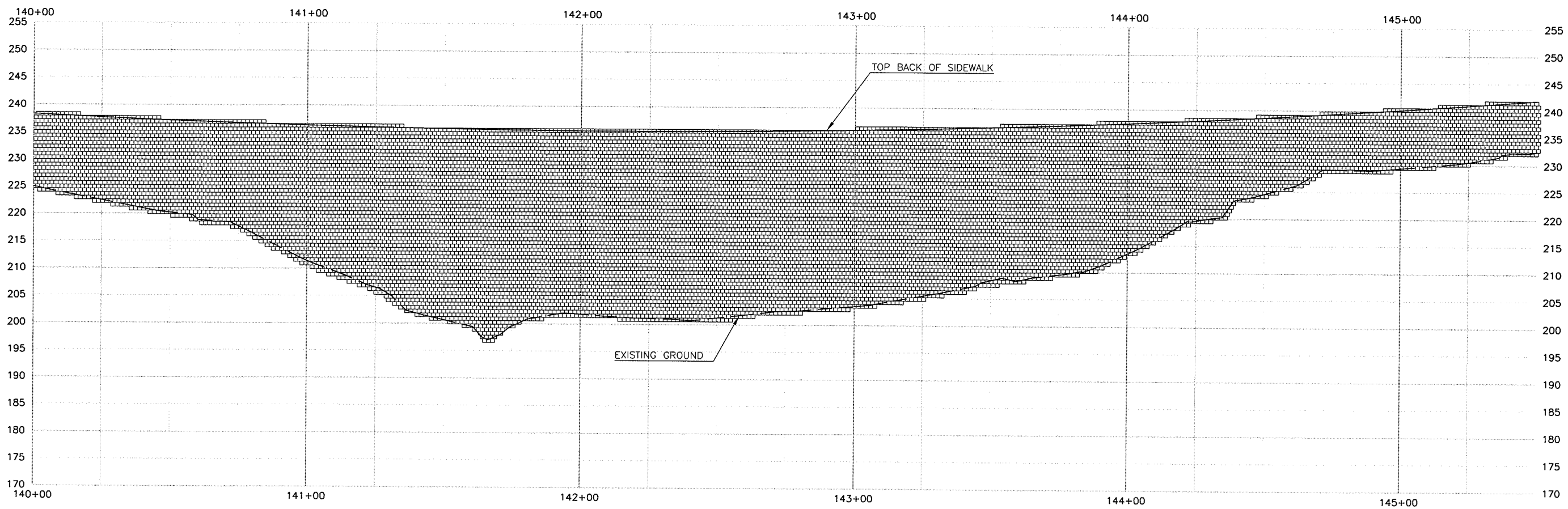

WALL 14

STA 89+75 TO 95+25 (RT SIDE)

DESIGNED MME
DRAWN KB
CRP 381122
HOR. 1"=20'
VERT. 1"=5'
DATE 12/22/03
DWG: W05
SHEET OF

CALL 48 HOURS BEFORE YOU DIG
1-800-553-4344
"It's the Law"
NORTHWEST UTILITIES NOTIFICATION CENTER

MICHAEL W. KRUCK
STATE OF WASHINGTON
24035
PROFESSIONAL ENGINEER
EXPIRES MAY 26, 2005

DESIGN & ENGINEERING DIVISION
DESIGN SECTION

NE 179TH STREET (I-5 TO NE 50TH AVE)
RETAINING WALLS

proud past, promising future
CLARK COUNTY
WASHINGTON

N:\CIP\PROJECTS\381122-NE179th-East\DESIGN\Dwg\179THW01-7.dwg, 12/18/2003 6:19:23 AM, kerlinr

N:\CIP\PROJECTS\381122-NE179th-East\DESIGN\Dwg\179THW01-7.dwg, 12/18/2003 6:26:45 AM, kerlinr

WALL 15

STA 107+00 TO 108+00 (LT SIDE)

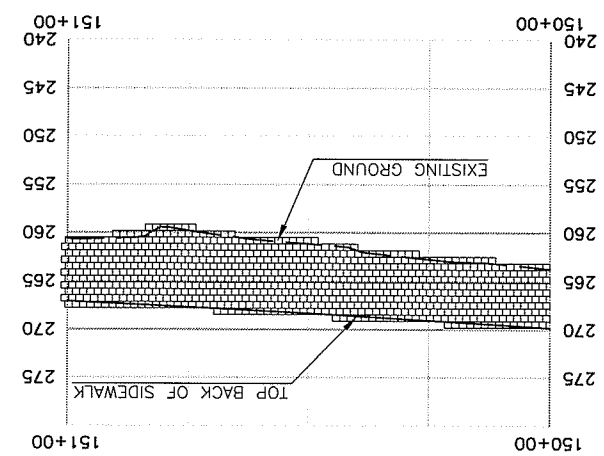

WALL 16

STA 108+00 TO 109+00 (RT SIDE)

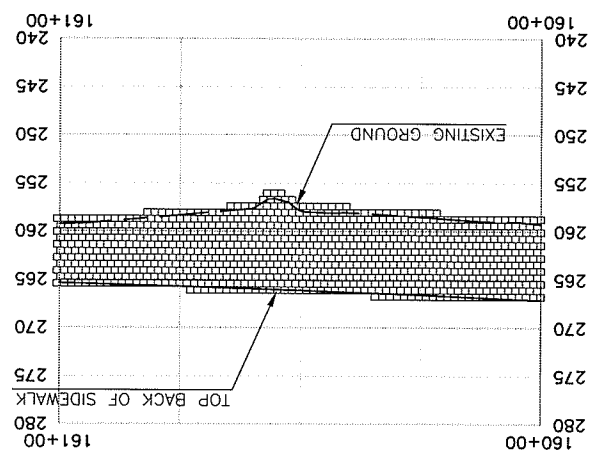

CLARK COUNTY WASHINGTON

proud past, promising future

DESIGN & ENGINEERING DIVISION

DESIGN SECTION

NE 179TH STREET (I-5 TO NE 50TH AVE)

RETAINING WALLS

MICHAEL M. EDWARDS
STATE OF WASHINGTON
29930
PROFESSIONAL ENGINEER
EXPIRES MAY 26, 2005

CALL 48 HOURS BEFORE YOU DIG
1-800-553-4344
"It's the Law"
NORTHWEST UTILITIES NOTIFICATION CENTER

DESIGNED	MME		
DRAWN	KB		
CRP	381122		
HOR.	1"=20'		
VERT.	1"=5'		
DATE	12/22/03		
DWG:	W06		
SHEET		OF	

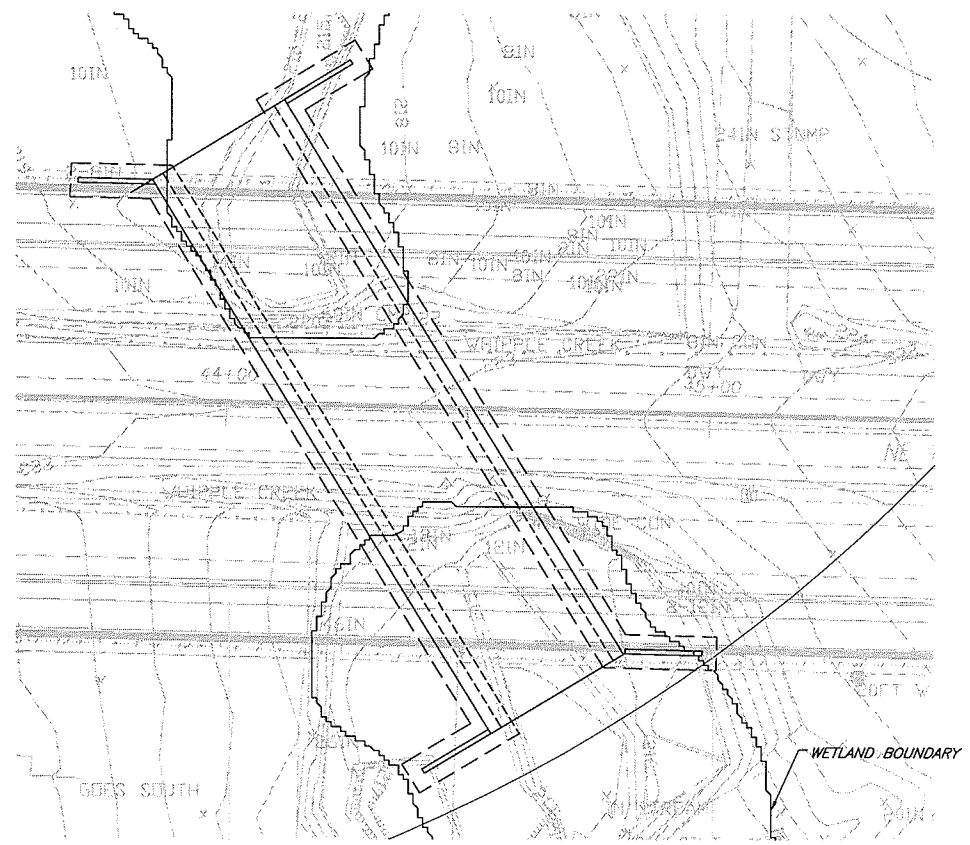

SCALE 1"=20'-0"

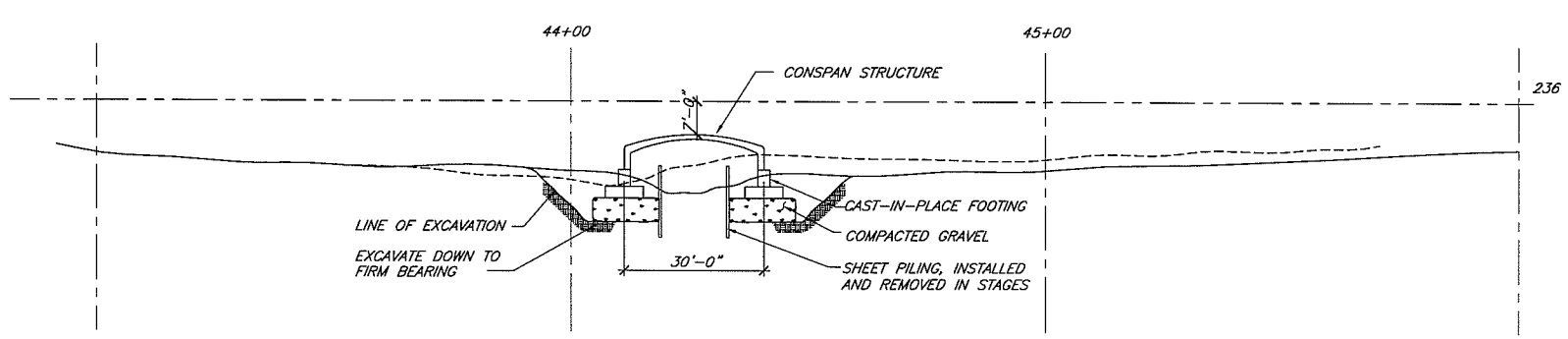

SCALE 1"=20'-0"

90% PLANS

DESIGNED	DS
DRAWN	TR
CRP	38112
HOR.	1
VERT.	1
DATE	DEC 2003
DWG:	B1
SHEET	OF

CALL 48 HOURS BEFORE YOU DIG
1-800-553-4344
"It's the Law"
NORTHWEST UTILITIES NOTIFICATION CENTER

DONOVAN L. SARGENT, STATE OF WASHINGTON, 24158, REGISTERED PROFESSIONAL ENGINEER
EXPIRES OCT. 22, 2004

DESIGN & ENGINEERING DIVISION
DESIGN SECTION

NE 179th STREET (I-5 TO NE 50th AVE)
WHIPPLE CREEK CROSSING (STA 44+50)

proud past, promising future
CLARK COUNTY WASHINGTON

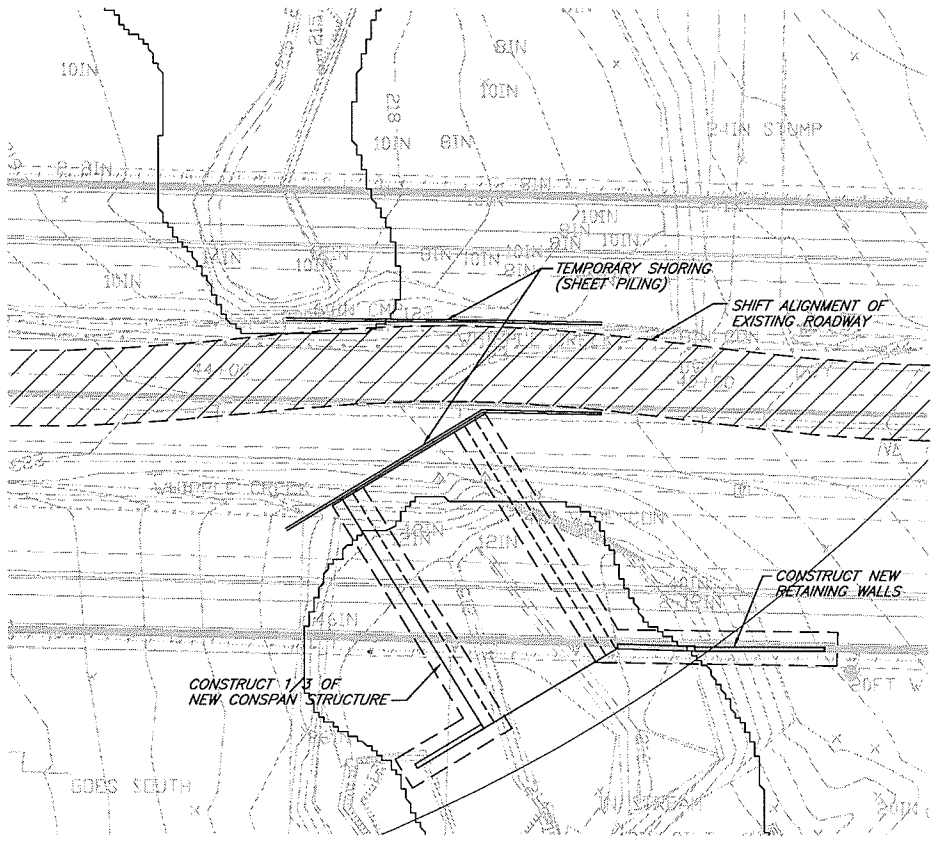

STAGE 1
SCALE 1"=20'-0"

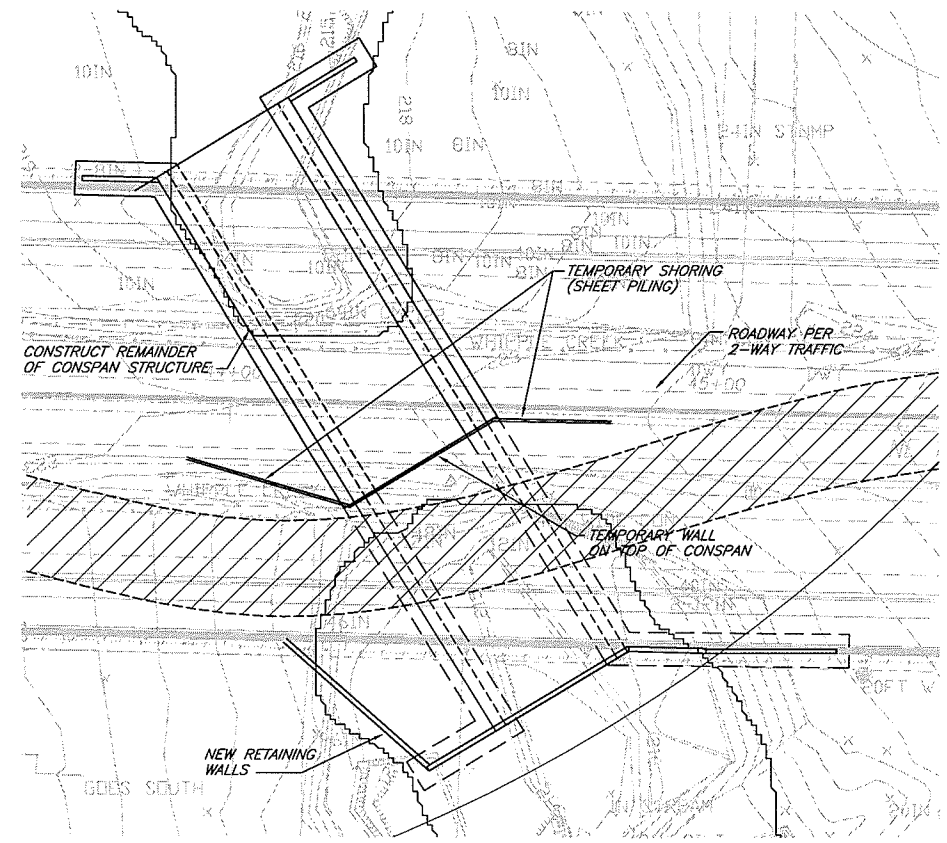

STAGE 2
SCALE 1"=20'-0"

90% PLANS

DESIGNED	DS
DRAWN	TR
CRP	38112
HOR.	1
VERT.	1
DATE	DEC 2003
DWG:	B2
SHEET	OF

CALL 48 HOURS BEFORE YOU DIG
1-800-553-4344
"It's the Law"
NORTHWEST UTILITIES NOTIFICATION CENTER

DOUGLAS W. SALOMON P.E.
STATE OF WASHINGTON
MEMBERS
24138
PROFESSIONAL
EXPIRES OCT. 22, 2004

DESIGN & ENGINEERING DIVISION
DESIGN SECTION

NE 179th STREET (I-5 TO NE 50th AVE)
WHIPPLE CREEK CROSSING (STAGING PLANS)

proud past, promising future
CLARK COUNTY
WASHINGTON

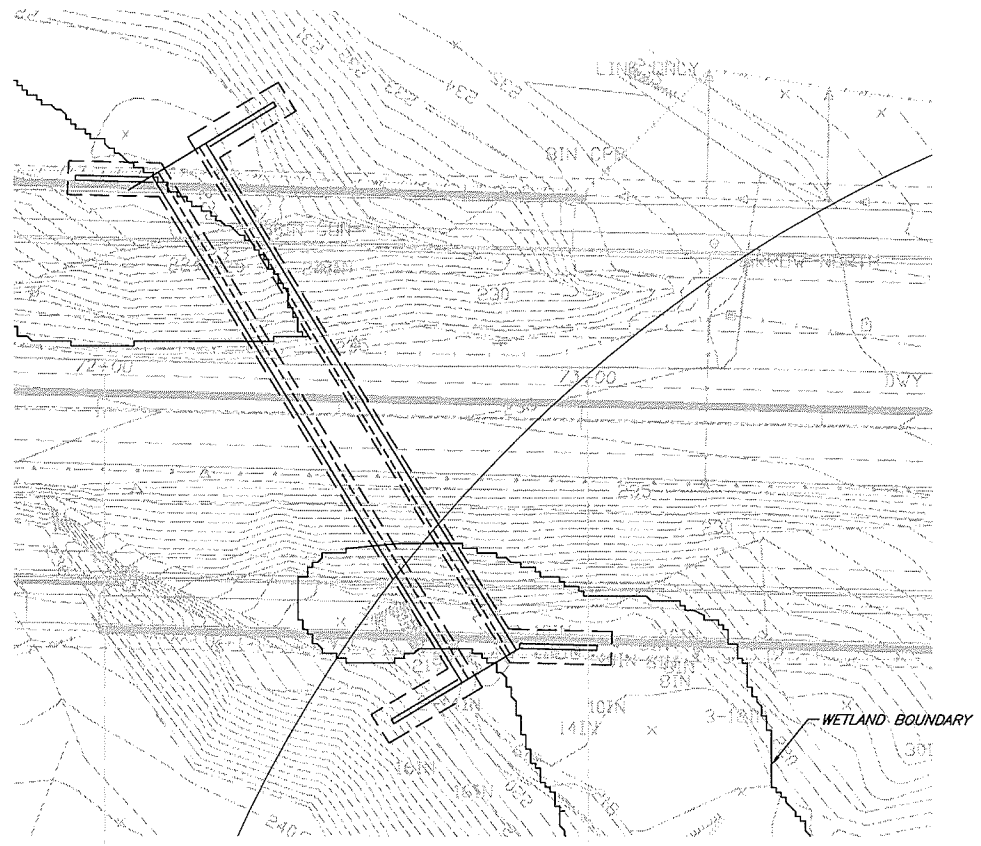

SCALE 1"=20'-0"

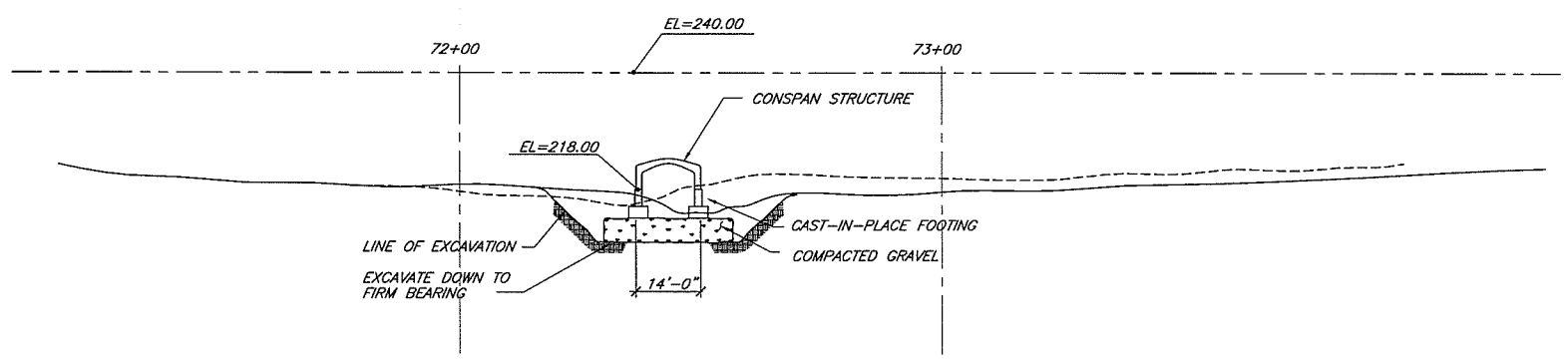

SCALE 1"=20'-0"

90% PLANS

DESIGNED	DS
DRAWN	TR
CRP	38112
HOR.	1
VERT.	1
DATE	DEC 2003
DWG:	B3
SHEET	OF

CALL 48 HOURS BEFORE YOU DIG
1-800-553-4344
"It's the Law"
NORTHWEST UTILITIES NOTIFICATION CENTER

DOUGLAS W. SARGENTON P.E. WASHINGTON 24138 STATE PROFESSIONAL ENGINEER
EXPIRES OCT. 22, 2004

DESIGN & ENGINEERING DIVISION
DESIGN SECTION

NE 179th STREET (1-5 TO NE 50th AVE)
CREEK CROSSING (STA 72+50)

proud past, promising future
CLARK COUNTY WASHINGTON

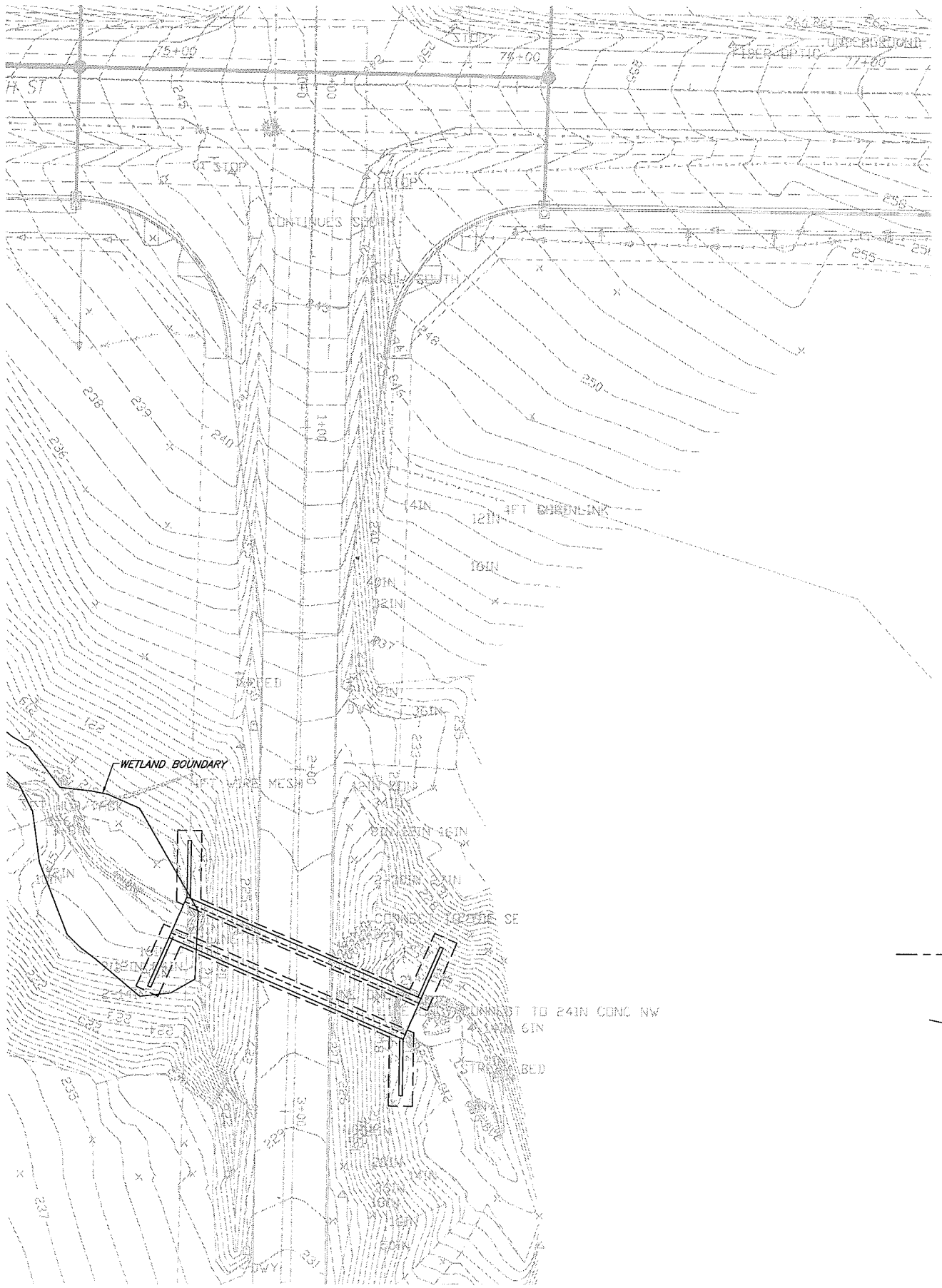

SCALE 1"=20'-0"

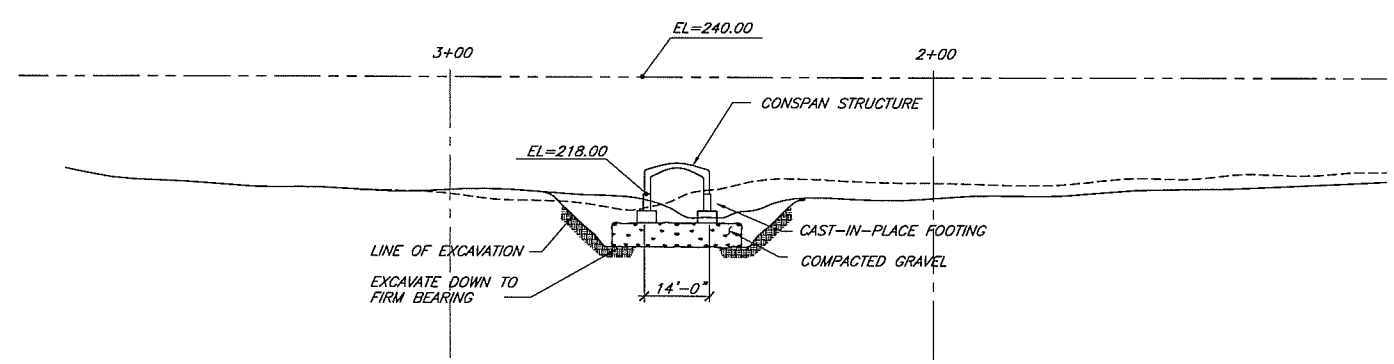

SCALE 1"=20'-0"

90% PLANS

DESIGNED	DS
DRAWN	TR
CRP	38112
HOR.	1
VERT.	1
DATE	DEC 2003
DWG.	B4
SHEET	OF

CALL 48 HOURS BEFORE YOU DIG
1-800-553-4344
"It's the Law"
NORTHWEST UTILITIES NOTIFICATION CENTER

DOUGLAS J. SARKYNEN P.E.
STATE OF WASHINGTON
PROFESSIONAL ENGINEER
EXPIRES OCT. 22, 2004

DESIGN & ENGINEERING DIVISION
DESIGN SECTION

NE 179th STREET (1-5 TO NE 50th AVE)
CREEK CROSSING (STA 2+50) NE 29th AVE

proud past, promising future
CLARK COUNTY
WASHINGTON

90% PLANS

SCALE 1"=20'-0"

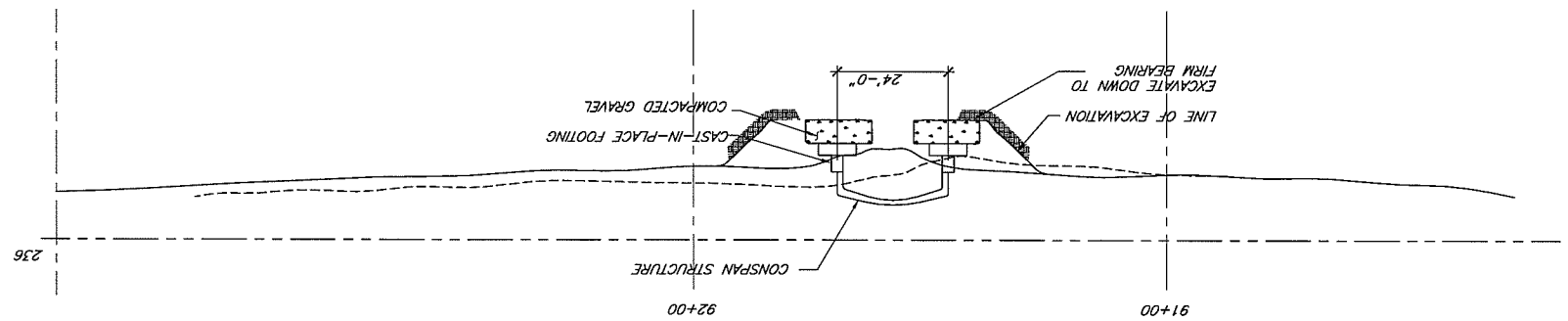

SCALE 1"=20'-0"

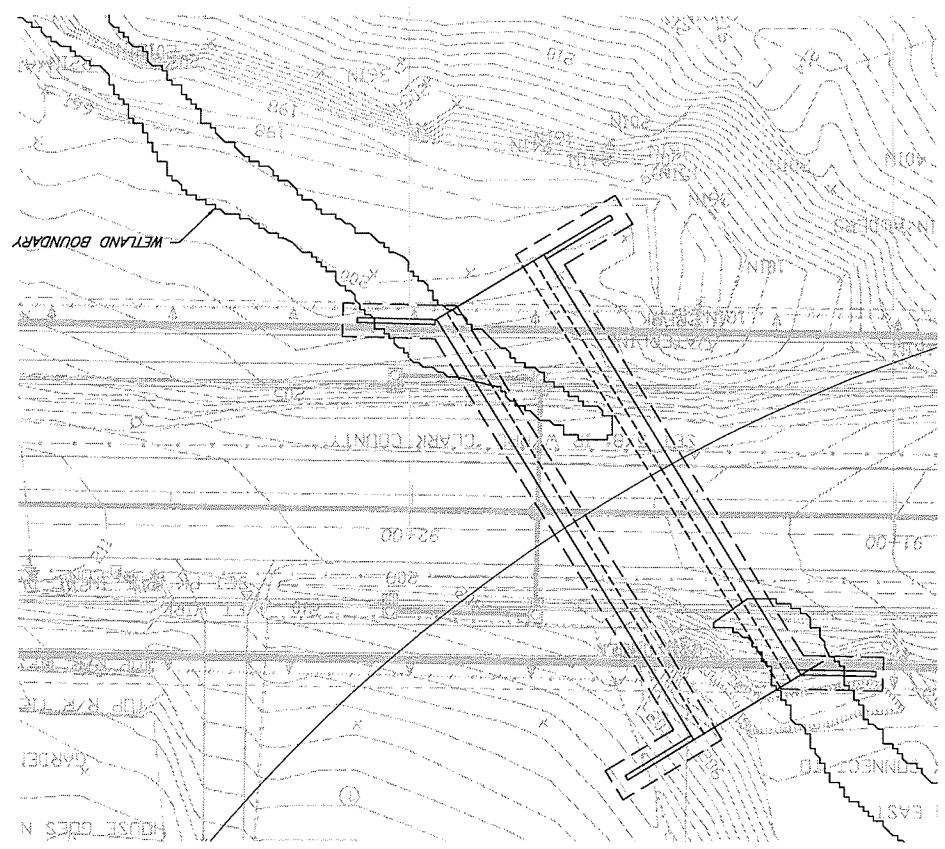

CLARK COUNTY
WASHINGTON
proud past, promising future

DESIGN & ENGINEERING DIVISION
DESIGN SECTION

NE 179th STREET (I-5 TO NE 50th AVE)
TRIBUTARY MILL CREEK CROSSING (STA 91+30)

DOUGLAS A. SALMEN
STATE OF WASHINGTON
PROFESSIONAL ENGINEER
EXPIRES OCT. 22, 2004

CALL 48 HOURS BEFORE YOU DIG
1-800-553-4344
"It's the Law"
NORTHWEST UTILITIES NOTIFICATION CENTER

DESIGNED	DS		
DRAWN	TR		
CRP	38112		
HOR.	1		
VERT.	1		
DATE	DEC 2003		
DWG:	B5		
SHEET		OF	

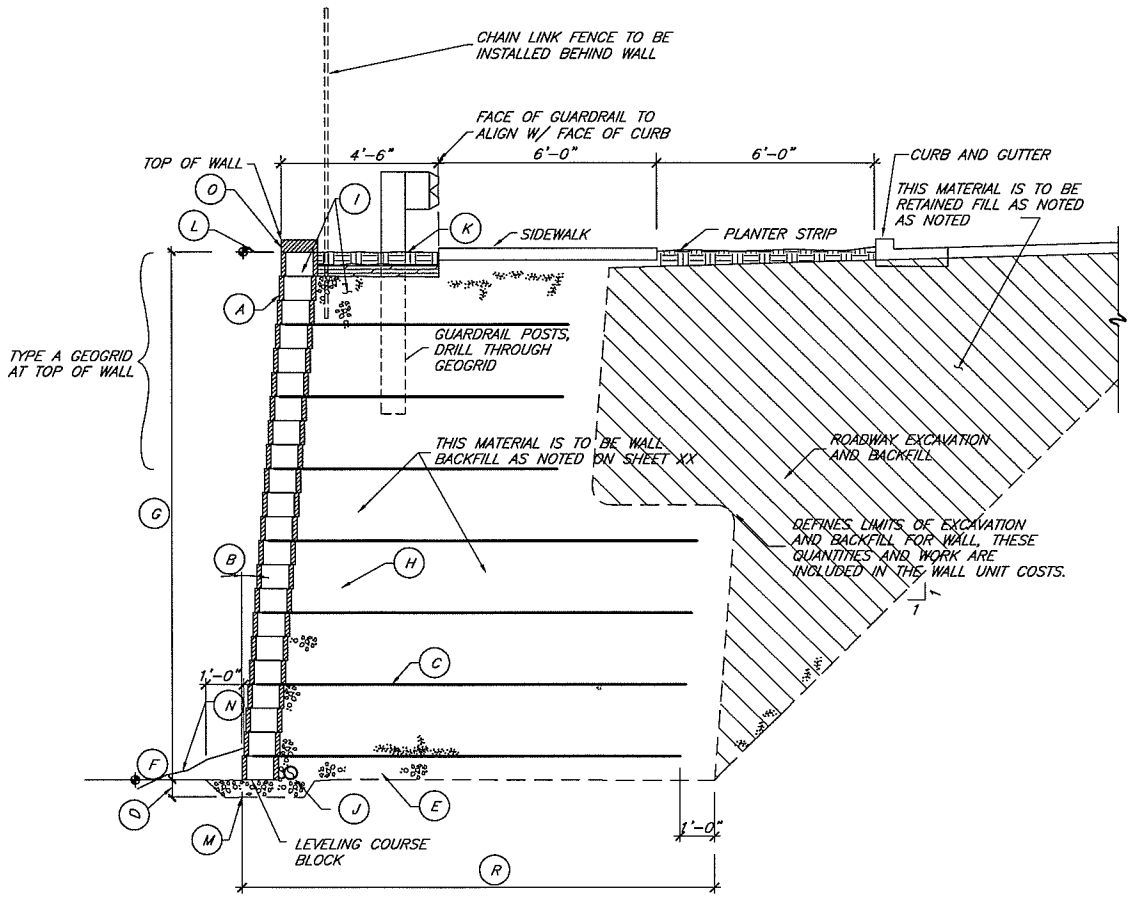

A / B6 WALL SECTION – EXCAVATION & FILL CRITERIA

NTS

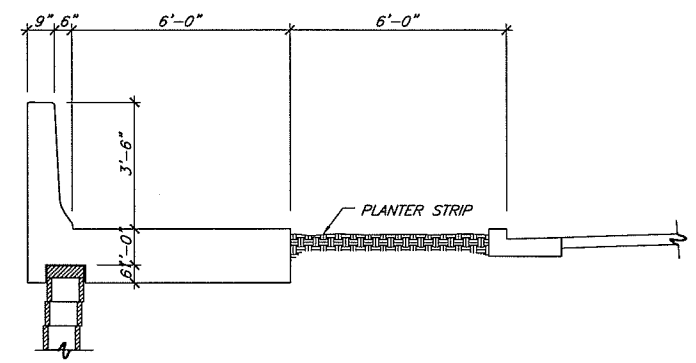

B / B6 CONCRETE BARRIER DETAIL

NTS

WALL SECTION NOTES

- (A) KEYSTONE 8" HIGH STD UNITS.
- (B) 4.4 DEGREE WALL BATTER.
- (C) GEOGRID. SEE WALL ELEVATION AND GEOGRID SCHEDULE FOR TYPE, LENGTH, ELEVATION.
- (D) 6" MINIMUM OF 9.03.12 (2) GRAVEL. UNDER 1ST BLOCK COURSE.
- (E) EXCAVATE DOWN TO UNDISTURBED NATIVE SOIL OR OVER-EXCAVATE AND PROVIDE 6" MIN. COMPACTED GRANULAR FILL.
- (F) MINIMUM BOTTOM OF WALL ELEVATION. VERIFY DEPTH BELOW FINISHED GRADE PER WALL ELEVATIONS.
- (G) WALL HEIGHT SHOWN ON WALL ELEVATION.
- (H) REINFORCED FILL: SEE NOTES ON SHEET XX
- (I) 3/4" MINUS ANGULAR FREE DRAINING CRUSHED ROCK.
- (J) 4" ø PERFORATED DRAIN PIPE. DRAIN TO TOE OF SLOPING GROUND. PROVIDE OUTLETS THROUGH WALL @ 80' INTERVALS.
- (K) 4" OF TOP SOIL OVER 4" OF LOW PERMEABILITY CLAY.
- (L) GROUND AT BACK OF WALL, SEE WALL ELEVATIONS.
- (M) SUB GRADE SHALL BE INSPECTED BY THE ENGINEER PRIOR TO PLACEMENT OF CRUSHED ROCK BASE PAD. CRUSHED ROCK BASE TO BE THE SAME AS FOR REINFORCED FILL
- (N) FINISHED GRADE
- (O) GLUE CAP UNITS PER BLOCK MANUFACTURER'S RECOMMENDATIONS.
- (P) RETAINED FILL, SEE NOTE ON XX
- (R) GEOGRID LENGTH, SEE GEOGRID SCHEDULE ON W01 AND XX.

90% PLANS

DESIGNED	DS
DRAWN	TR
CRP	38112
HOR.	1
VERT.	1
DATE	DEC 2003
DWG:	B6
SHEET.	OF .

CALL 48 HOURS BEFORE YOU DIG 1-800-553-4344 "It's the Law" NORTHWEST UTILITIES NOTIFICATION CENTER

DOUGLAS A. SABRACHNEY P.E. STATE OF WASHINGTON 21198 PROFESSIONAL ENGINEER
EXPIRES OCT. 22, 2004

DESIGN & ENGINEERING DIVISION
DESIGN SECTION

NE 179th STREET (1-5 TO NE 50th AVE)
SRW WALL SECTION

proud past, promising future
CLARK COUNTY WASHINGTON

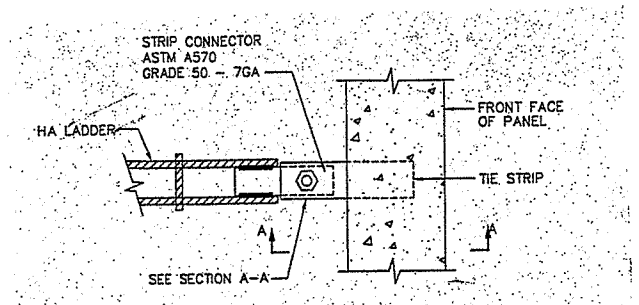

PARTIAL PLAN AT
HA LADDER CONNECTION

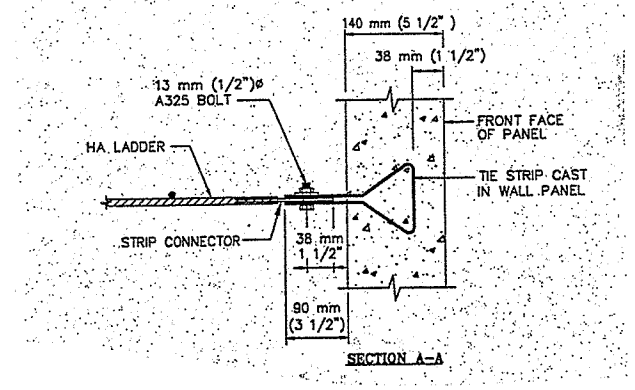

SECTION A–A

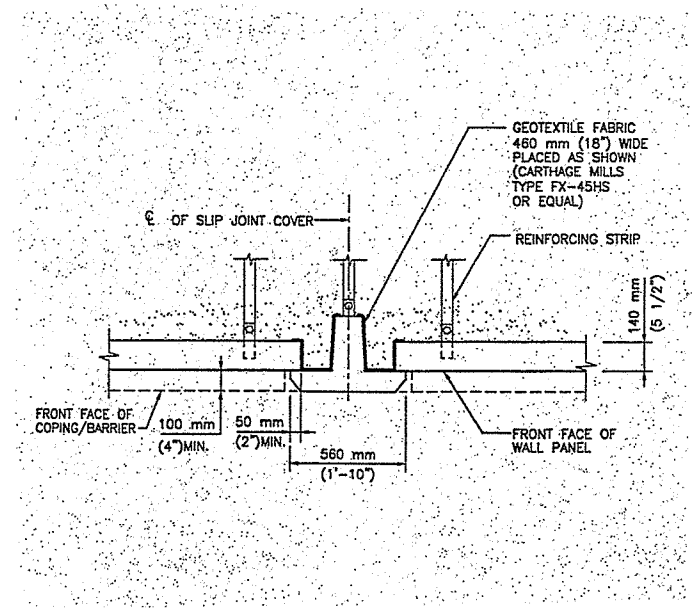

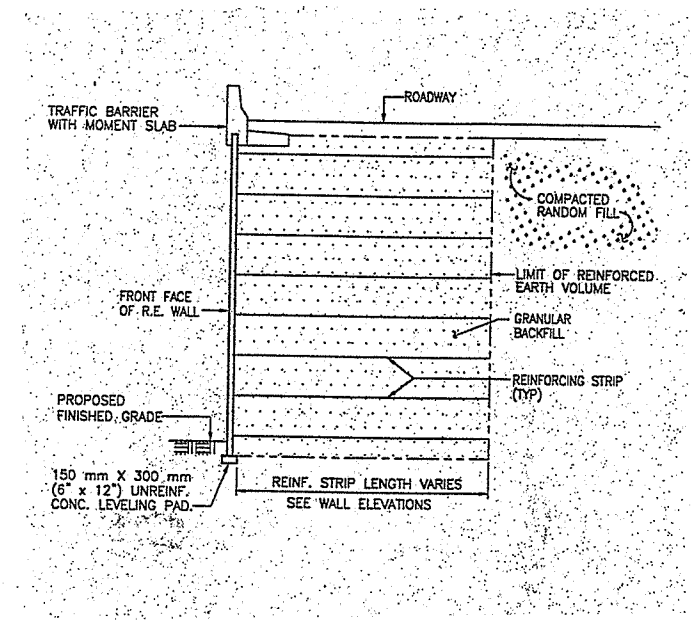

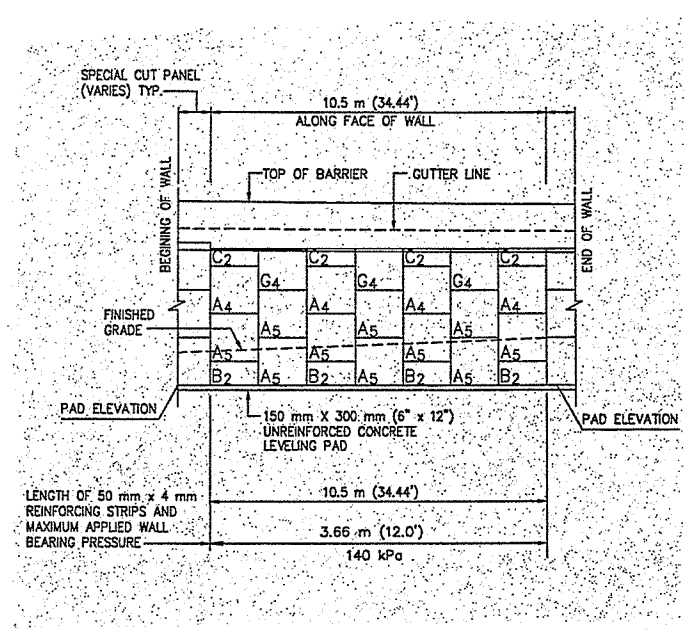

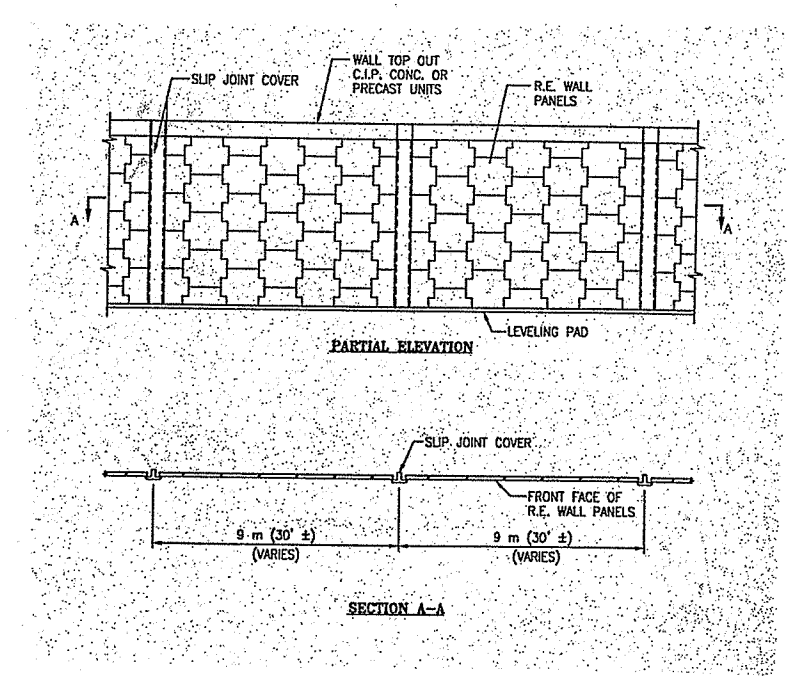

SECTION A–A

90% PLANS

DESIGNED	DS
DRAWN	TR
CRP	38112
HOR.	1
VERT.	1
DATE	DEC 2003
DWG.	B7
SHEET	OF

CALL 48 HOURS BEFORE YOU DIG
1–800–553–4344
"It's the Law"
NORTHWEST UTILITIES NOTIFICATION CENTER

DOUGLAS L. SARKEYNEN P.E.
STATE OF WASHINGTON
24136
REGISTERED PROFESSIONAL ENGINEER
OCT. 22, 2004

DEPARTMENT OF PUBLIC WORKS

DESIGN & ENGINEERING DIVISION
DESIGN SECTION

NE 179th STREET (1–5 TO NE 50th AVE)
MSE WALL SECTIONS

proud past, promising future
CLARK COUNTY
WASHINGTON

N:\Doug–S\03–278 179th\ B7

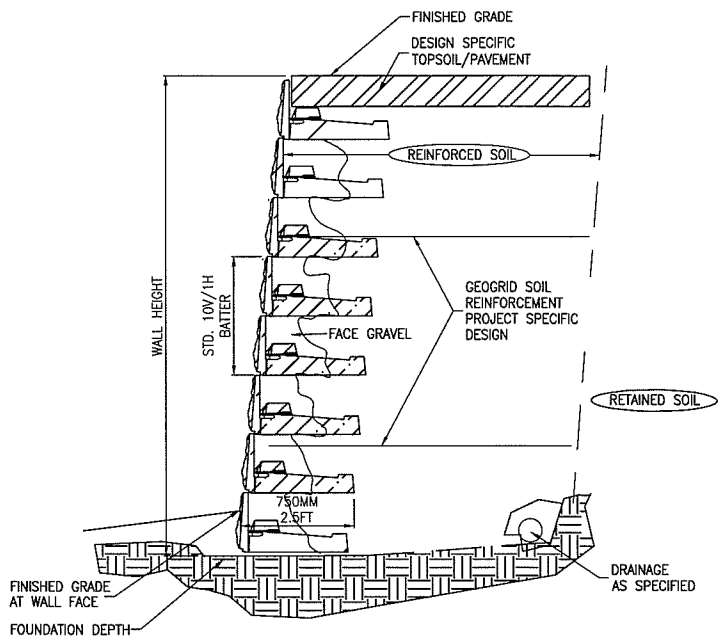

1. WALL HEIGHT (H) IS THE TOTAL HEIGHT FROM TOP INCLUDING EMBEDMENT.
2. MINIMUM EMBEDMENT IS 150MM (6") OR H/20
3. REINFORCED SOIL – AS SHOWN SAND/GRAVEL 34 DEG. 120#FT3
4. FINISHED GRADE TO PROVIDE FOR POSITIVE DRAINAGE
5. FOUNDATION ROW SET ON GRADED AND COMPACT SOIL OR GRANULAR PAD
6. ALL BACKFILL TO BE COMPACTED TO 95% MAX. DENSITY "
7. GRADING AT TOP OF WALL AND EMBEDMENT AS SPECIFIED
8. FACE GRAVEL – 300MM (12") LAYER OF 20MM (3/4") CRUSHED GRAVEL LESS THAN 6% PASSING #200 SIEVE
9. SPECIFIC PROJECT DESIGN DENOTES GEOGRID TYPE AND LENGTH

NOTES:
1. INSTALLATION TO BE COMPLETED IN ACCORDANCE WITH MANUFACTURER'S SPECIFICATIONS.
2. DO NOT SCALE DRAWINGS.
3. FINAL DESIGN SHALL BE PREPARED BY A REGISTERED ENGINEER FAMILIAR WITH SPECIFIC SITE CONDITIONS.

1/B8 **RETAINING WALL USING GOEGRID**
SECTION

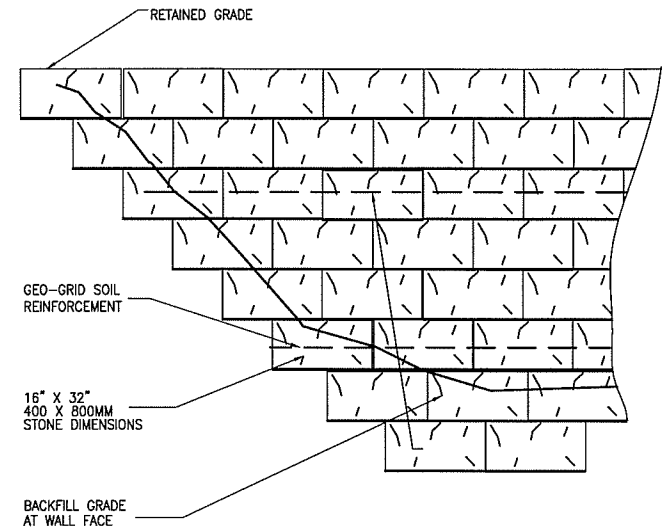

NOTES:
1. INSTALLATION TO BE COMPLETED IN ACCORDANCE WITH MANUFACTURER'S SPECIFICATIONS.
2. DO NOT SCALE DRAWINGS.
3. FINAL DESIGN SHALL BE PREPARED BY A REGISTERED ENGINEER FAMILIAR WITH SPECIFIC SITE CONDITIONS.

1/B8 **RETAINING WALL USING GOEGRID**
ELEVATION

90% PLANS

DESIGNED	DS
DRAWN	TR
CRP	38112
HOR.	1
VERT.	1
DATE	DEC 2003
DWG:	B8
SHEET	OF

CALL 48 HOURS BEFORE YOU DIG
1-800-553-4344
"It's the Law"
NORTHWEST UTILITIES NOTIFICATION CENTER

DOUGLAS W. SAYRE-MEN P.E. SUBMITTED
STATE OF WASHINGTON
24138
REGISTERED PROFESSIONAL ENGINEER
EXPIRES OCT. 22, 2004

DESIGN & ENGINEERING DIVISION
DESIGN SECTION

NE 179th STREET (1-5 TO NE 50th AVE)
LOCK + BLOCK WALL DETAILS

proud past, promising future
CLARK COUNTY
WASHINGTON

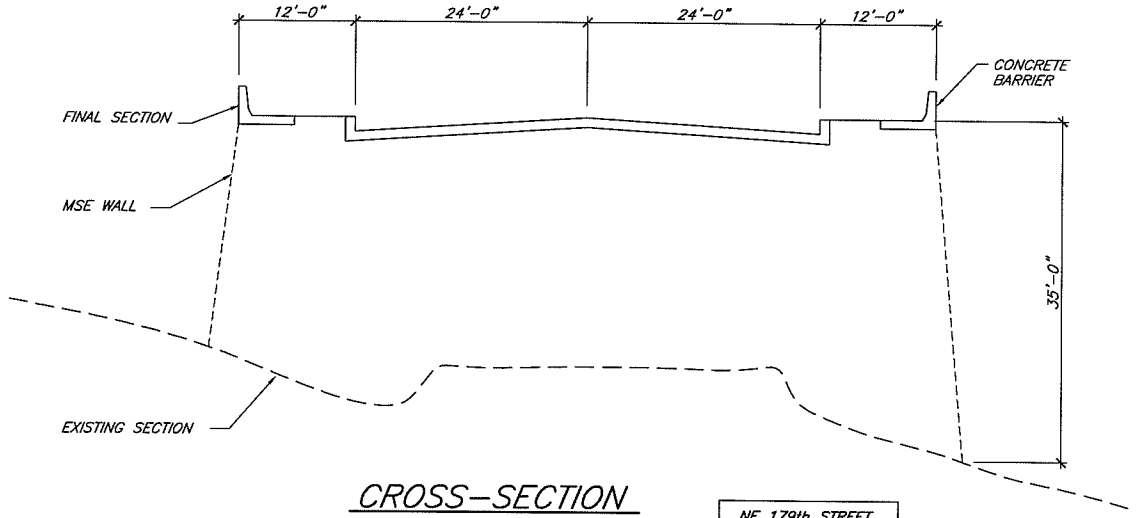

CROSS-SECTION

1"=10'

NE 179th STREET
SM 80+00 – 85+00
SM 89+00 – 95+00

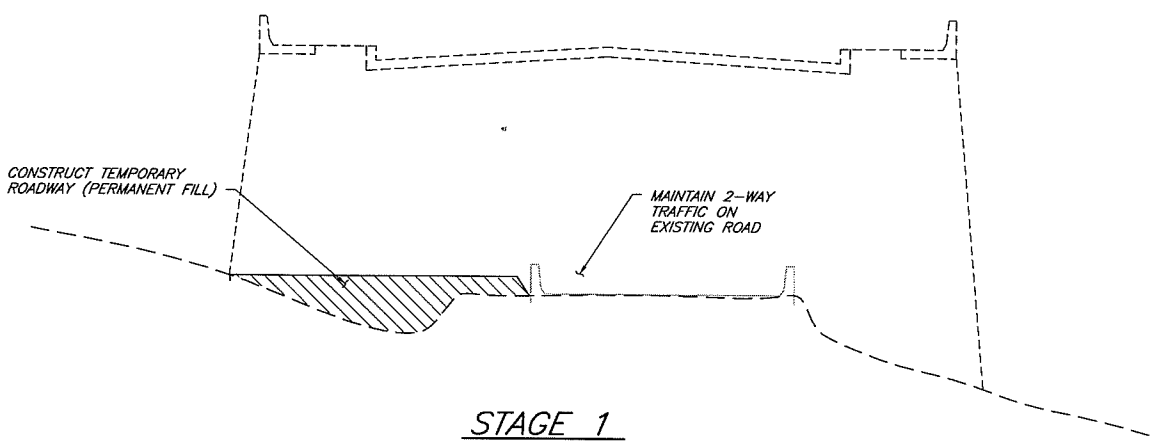

STAGE 1

1"=10'

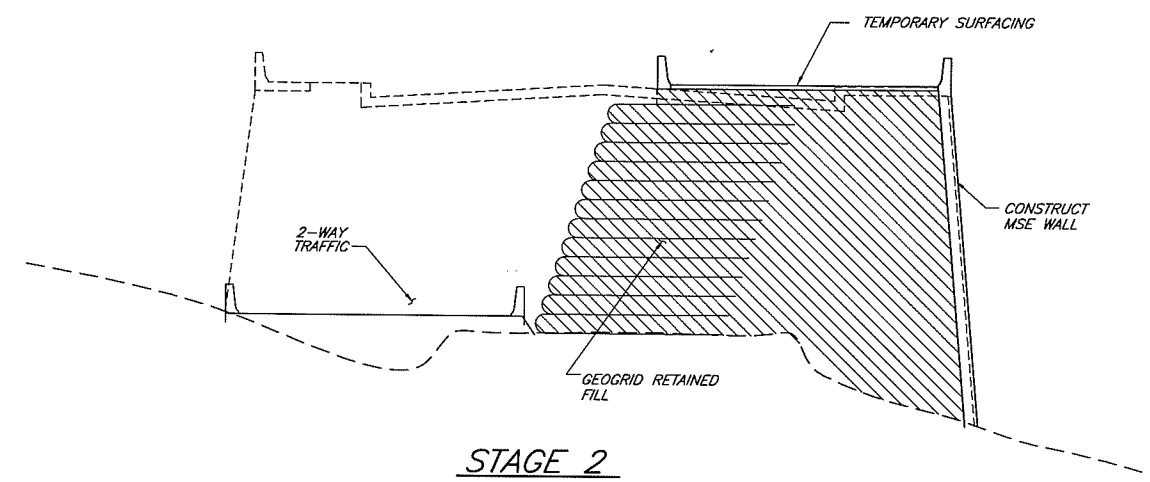

STAGE 2

1"=10'

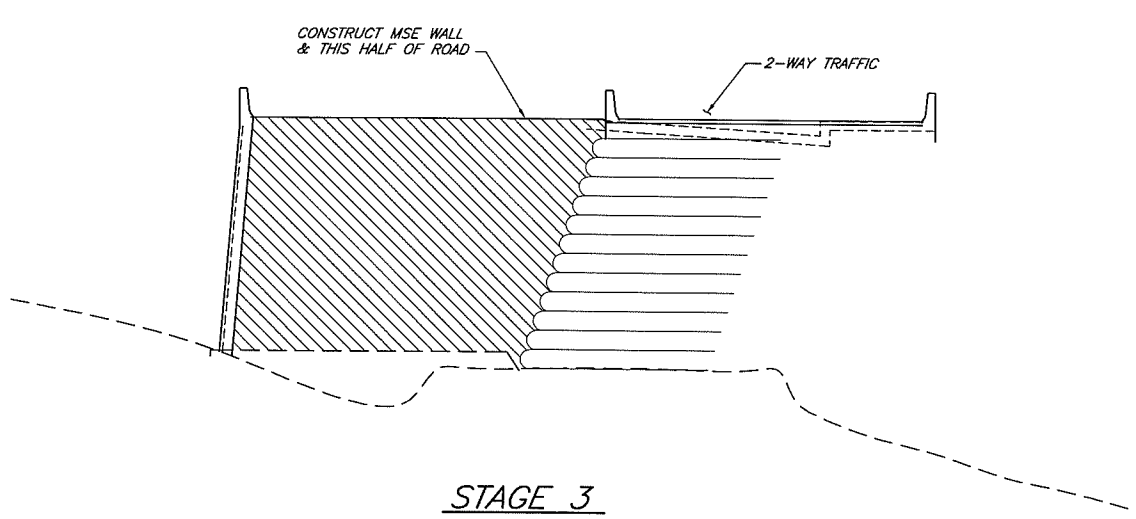

STAGE 3

1"=10'

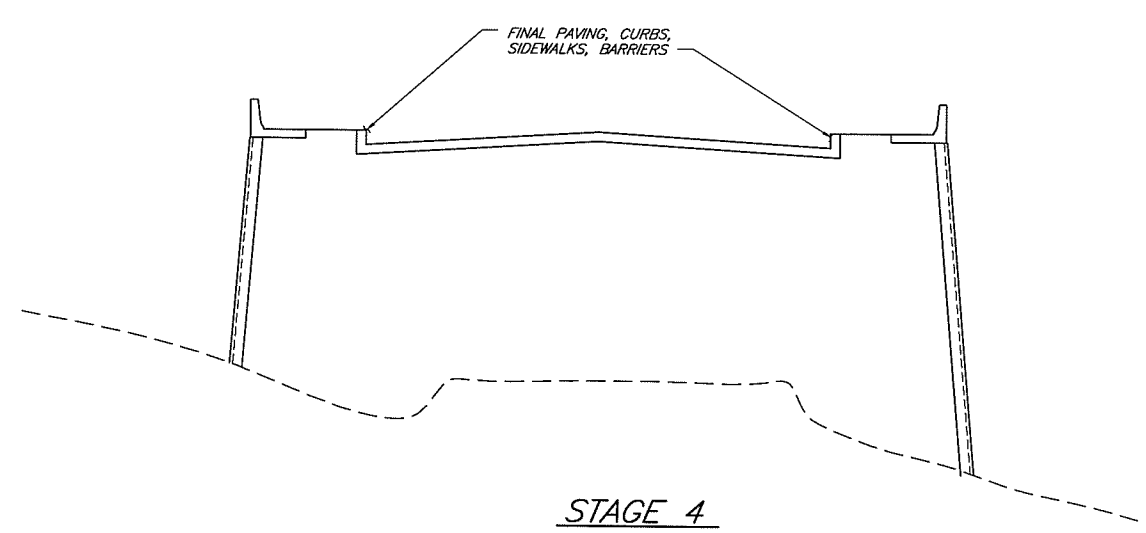

STAGE 4

1"=10'

90% PLANS

DESIGNED	DS
DRAWN	TR
CRP	38112
HOR.	1
VERT.	1
DATE	DEC 2003
DWG:	B9
SHEET	OF

CALL 48 HOURS BEFORE YOU DIG
1-800-553-4344
"It's the Law"
NORTHWEST UTILITIES NOTIFICATION CENTER

SARGANEN P.E. STATE OF WASHINGTON 54186 REGISTERED PROFESSIONAL ENGINEER
EXPIRES OCT. 22, 2004

DESIGN & ENGINEERING DIVISION
DESIGN SECTION

NE 179th STREET (I-5 TO NE 50th AVE)
WALL STAGING PLANS

proud past, promising future
CLARK COUNTY
WASHINGTON

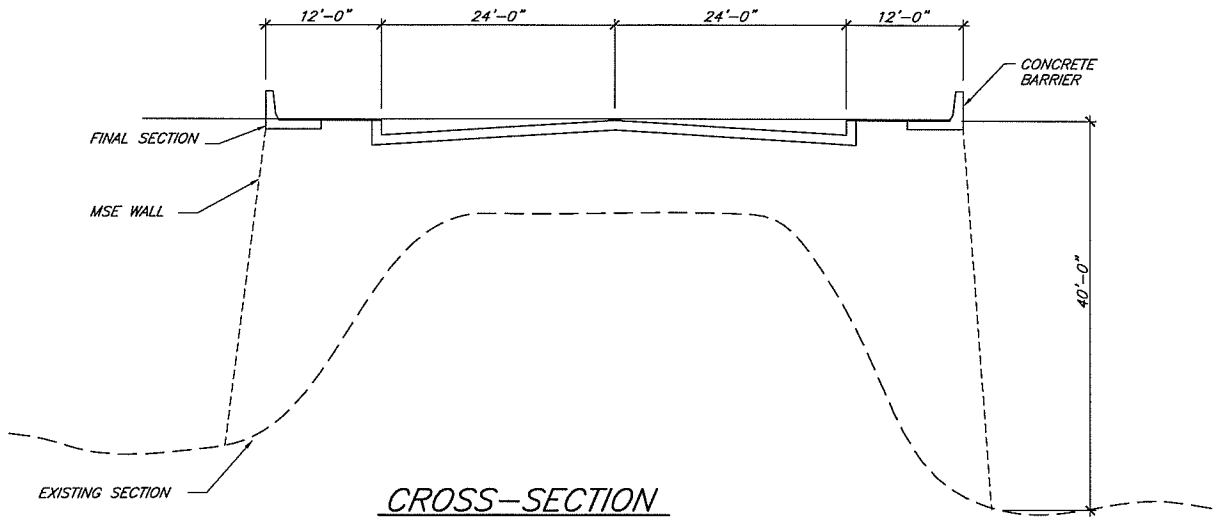

CROSS-SECTION

1"=20'

NE 179th STA 71+50 – 73+00
NE 29th STA 1+00 – 4+00

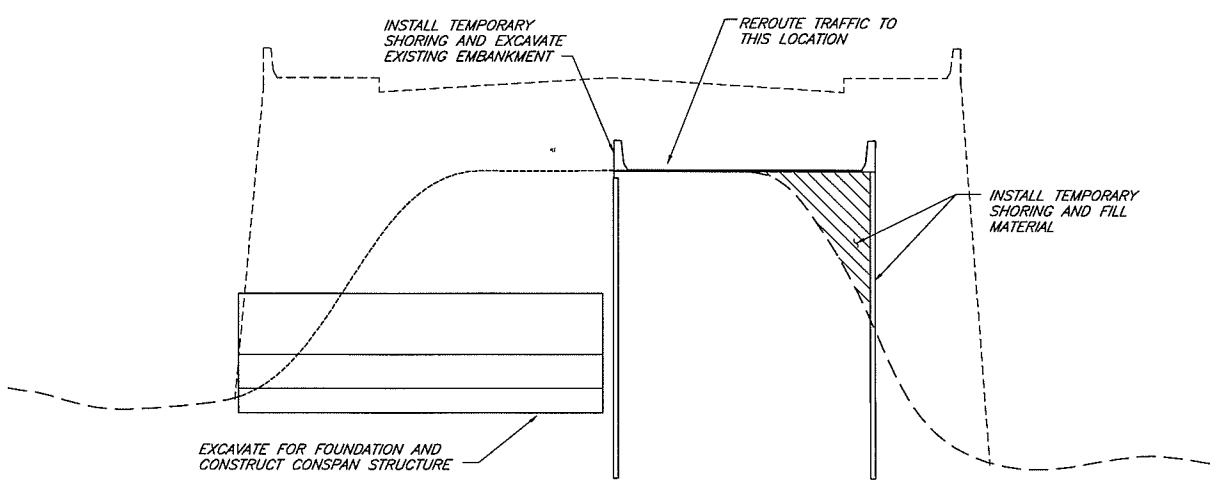

STAGE 1

1"=10'

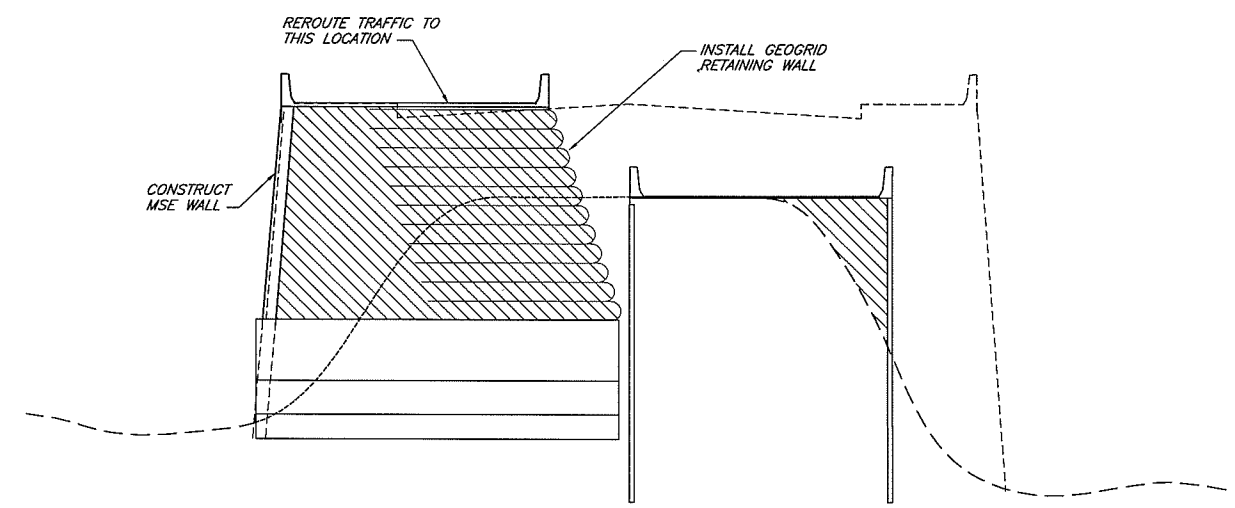

STAGE 2

1"=10'

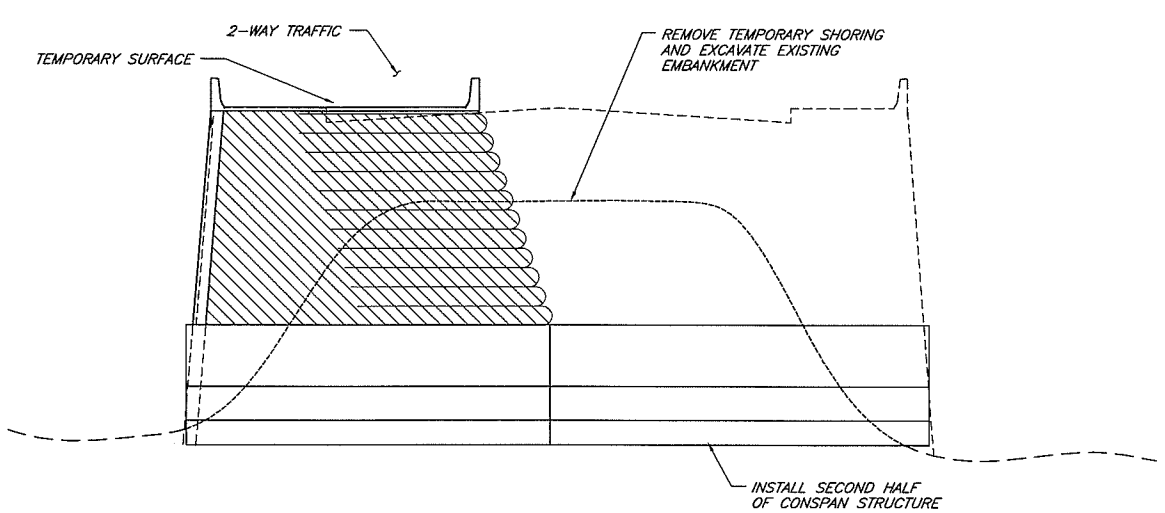

STAGE 3

1"=10'

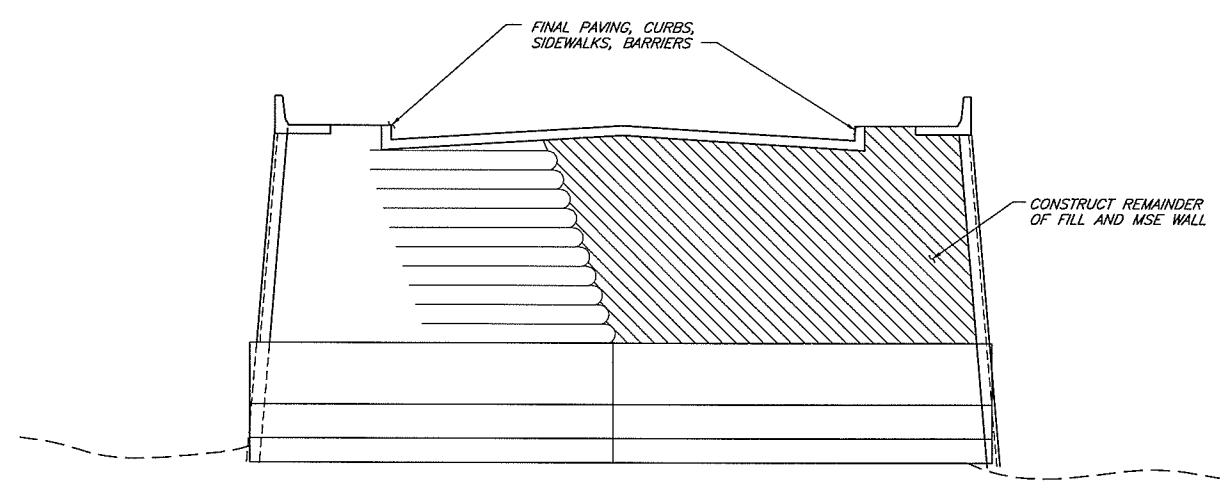

1"=10'

STAGE 4

1"=10'

90% PLANS

DESIGNED	DS
DRAWN	TR
CRP	38112
HOR.	1
VERT.	1
DATE	DEC 2003
DWG:	B10
SHEET	OF

CALL 48 HOURS BEFORE YOU DIG
1-800-553-4344
"It's the Law"
NORTHWEST UTILITIES NOTIFICATION CENTER

DOUGLAS L. SARGENT
STATE OF WASHINGTON
24138
REGISTERED PROFESSIONAL ENGINEER
EXPIRES OCT. 22, 2004

DESIGN & ENGINEERING DIVISION
DESIGN SECTION

NE 179th STREET (1-5 TO NE 50th AVE)
WALL STAGING PLANS

proud past, promising future
CLARK COUNTY
WASHINGTON

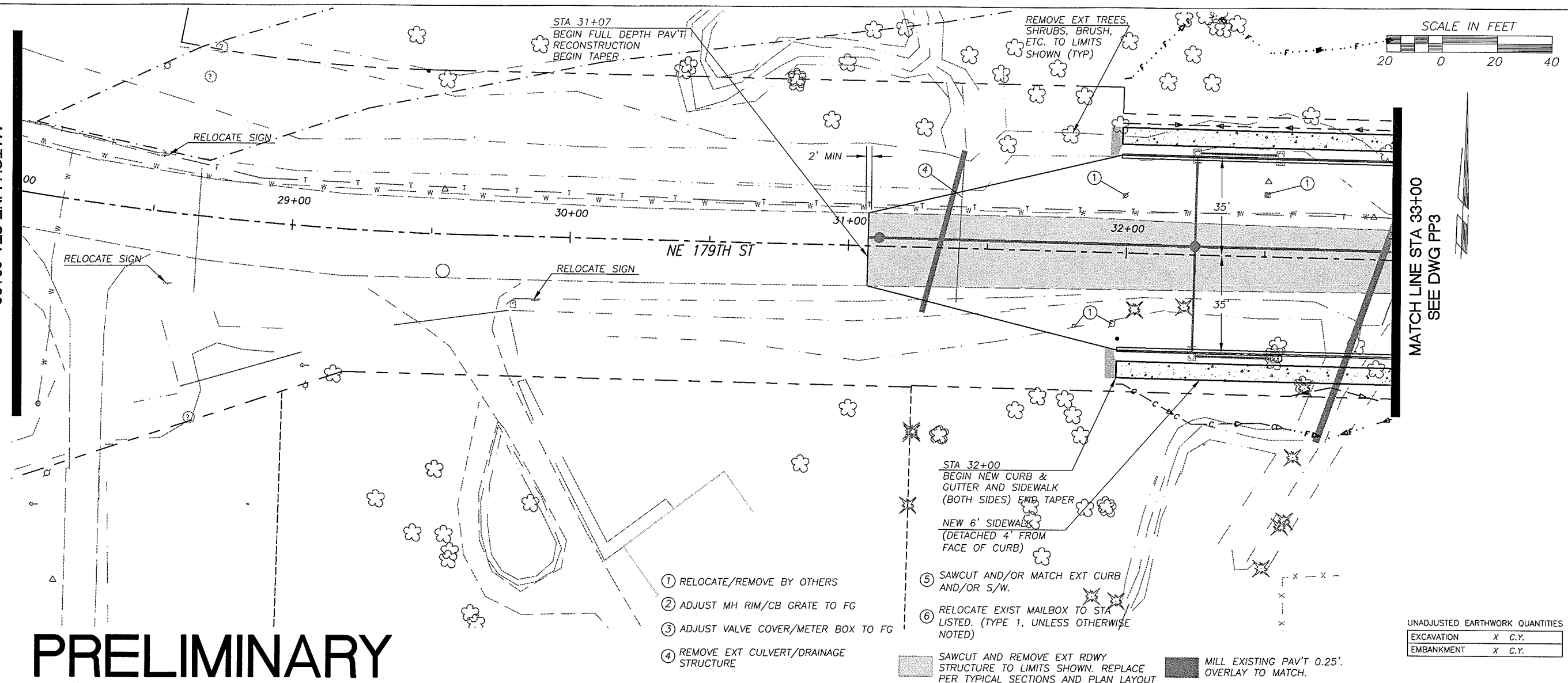

PRELIMINARY

UNADJUSTED EARTHWORK QUANTITIES

EXCAVATION	X C.Y.
EMBANKMENT	X C.Y.

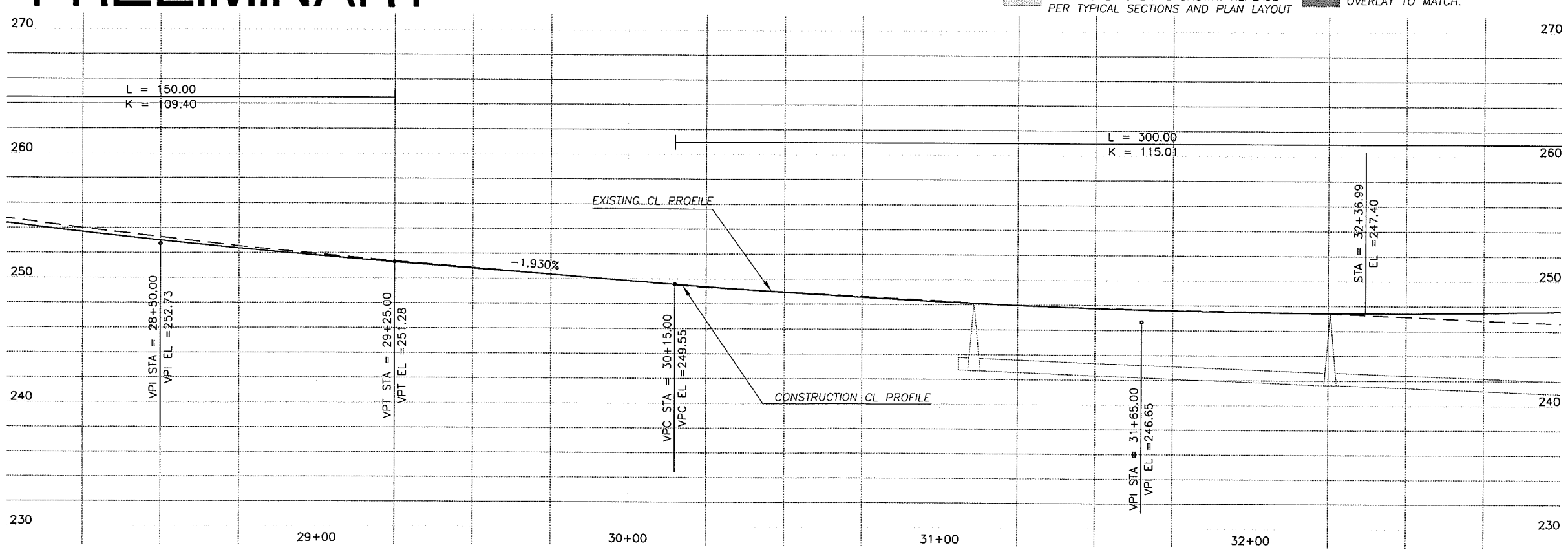

DESIGNED	RK		
DRAWN	MME		
CRP	381122	HOR.	20
VERT.	5	DATE	12/22/03
DWG:	PP2	SHEET X	OF X

CALL 48 HOURS BEFORE YOU DIG
1-800-553-4344
"It's the Law"
NORTHWEST UTILITIES NOTIFICATION CENTER

STEVEN M. EDWICK
STATE OF WASHINGTON
29630
REGISTERED PROFESSIONAL ENGINEER
EXPIRES MAY 28, 2005

DESIGN & ENGINEERING DIVISION
DESIGN SECTION

NE 179TH STREET (I-5 TO NE 50TH AVE)
PLAN & PROFILE STA 28+00 TO STA 33+00

proud past, promising future
CLARK COUNTY
WASHINGTON

N:\CIP\PROJECTS\381122-NE179th-Etsi\DESIGN\Dwg\179thEPP2.dwg, 12/18/2003 1:11:37 PM, kerlinr

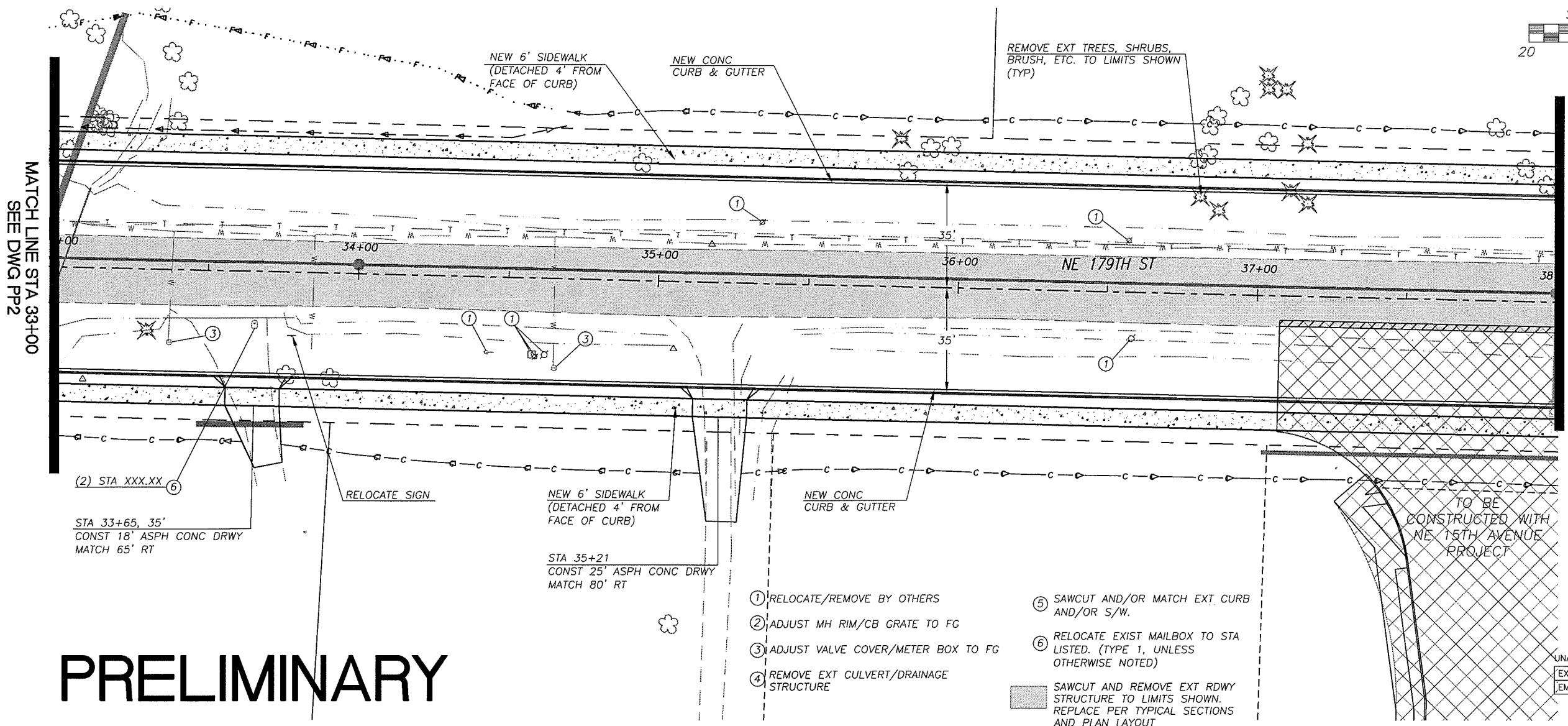

PRELIMINARY

1. RELOCATE/REMOVE BY OTHERS
2. ADJUST MH RIM/CB GRATE TO FG
3. ADJUST VALVE COVER/METER BOX TO FG
4. REMOVE EXT CULVERT/DRAINAGE STRUCTURE
5. SAWCUT AND/OR MATCH EXT CURB AND/OR S/W.
6. RELOCATE EXIST MAILBOX TO STA LISTED. (TYPE 1, UNLESS OTHERWISE NOTED)

SAWCUT AND REMOVE EXT RDWY STRUCTURE TO LIMITS SHOWN. REPLACE PER TYPICAL SECTIONS AND PLAN LAYOUT

UNADJUSTED EARTHWORK QUANTITIES

EXCAVATION	X	C.Y.
EMBANKMENT	X	C.Y.

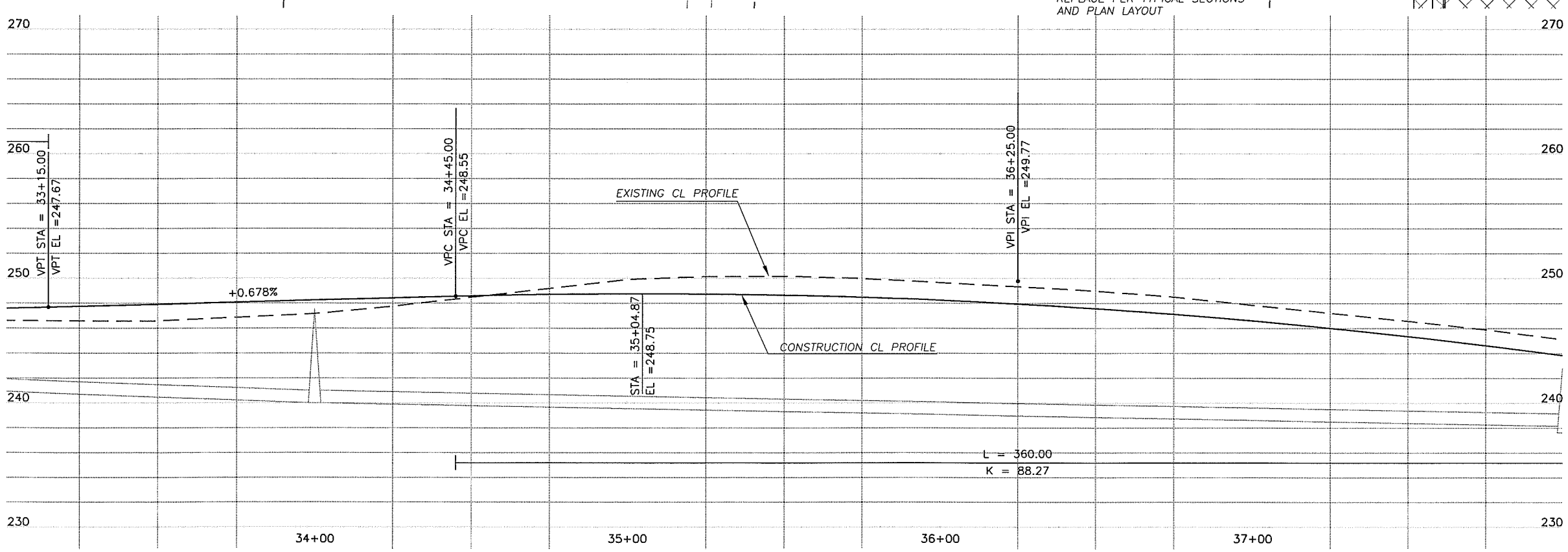

DESIGNED MME
DRAWN RK
CRP 381122
HOR. 20
VERT. 5
DATE 12/22/03
DWG: PP3
SHEET X OF X

CALL 48 HOURS BEFORE YOU DIG 1-800-553-4344 "It's the Law" NORTHWEST UTILITIES NOTIFICATION CENTER

STEVEN M. EMICK STATE OF WASHINGTON 20115 REGISTERED PROFESSIONAL ENGINEER
EXPIRES JULY 13, 2005

DESIGN & ENGINEERING DIVISION
DESIGN SECTION

NE 179TH STREET (I-5 TO NE 50TH AVE)
PLAN & PROFILE STA 33+00 TO STA 38+00

proud past, promising future
CLARK COUNTY WASHINGTON

N:\CIP\PROJECTS\381122-NE179th-East\DESIGN\Dwg\179thEPP3.dwg, 12/18/2003 1:12:39 PM, kerlinr

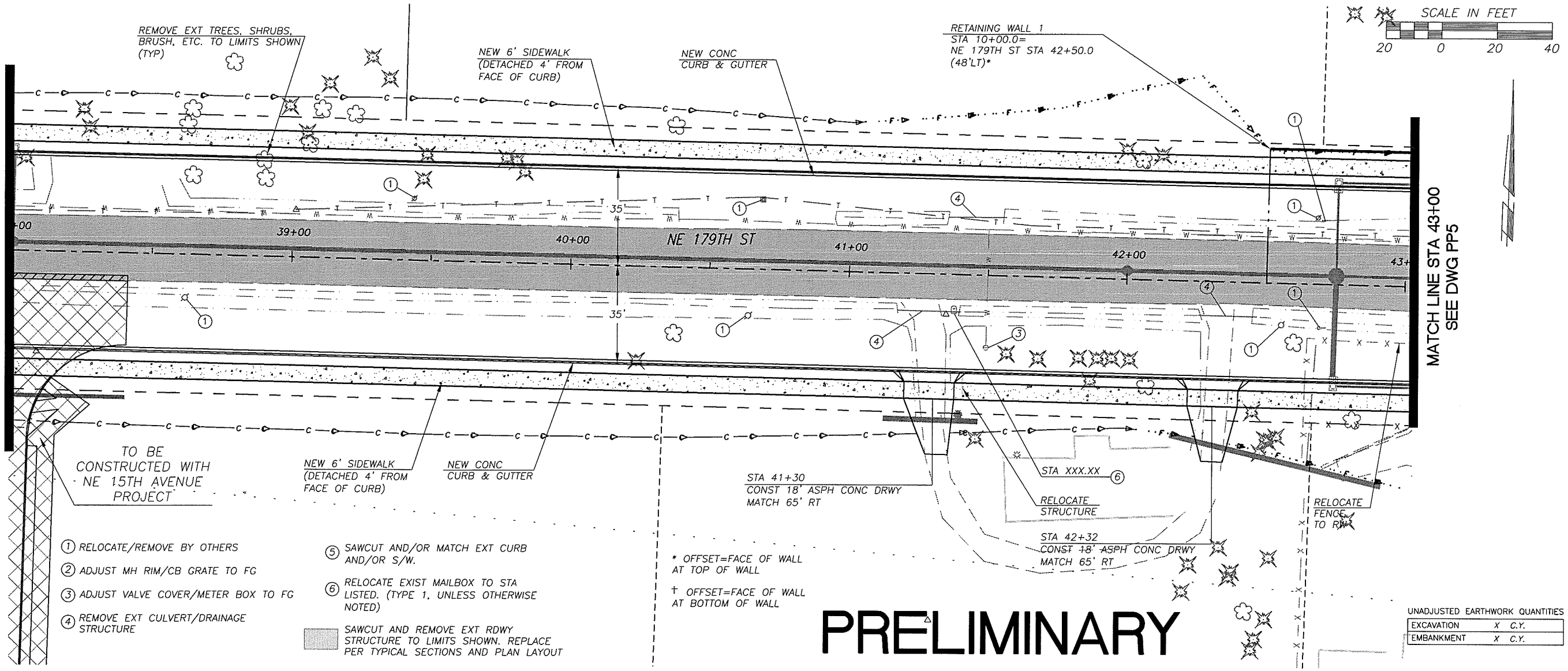

1. RELOCATE/REMOVE BY OTHERS
2. ADJUST MH RIM/CB GRATE TO FG
3. ADJUST VALVE COVER/METER BOX TO FG
4. REMOVE EXT CULVERT/DRAINAGE STRUCTURE
5. SAWCUT AND/OR MATCH EXT CURB AND/OR S/W.
6. RELOCATE EXIST MAILBOX TO STA LISTED. (TYPE 1, UNLESS OTHERWISE NOTED)

SAWCUT AND REMOVE EXT RDWY STRUCTURE TO LIMITS SHOWN. REPLACE PER TYPICAL SECTIONS AND PLAN LAYOUT

UNADJUSTED EARTHWORK QUANTITIES

EXCAVATION	X	C.Y.
EMBANKMENT	X	C.Y.

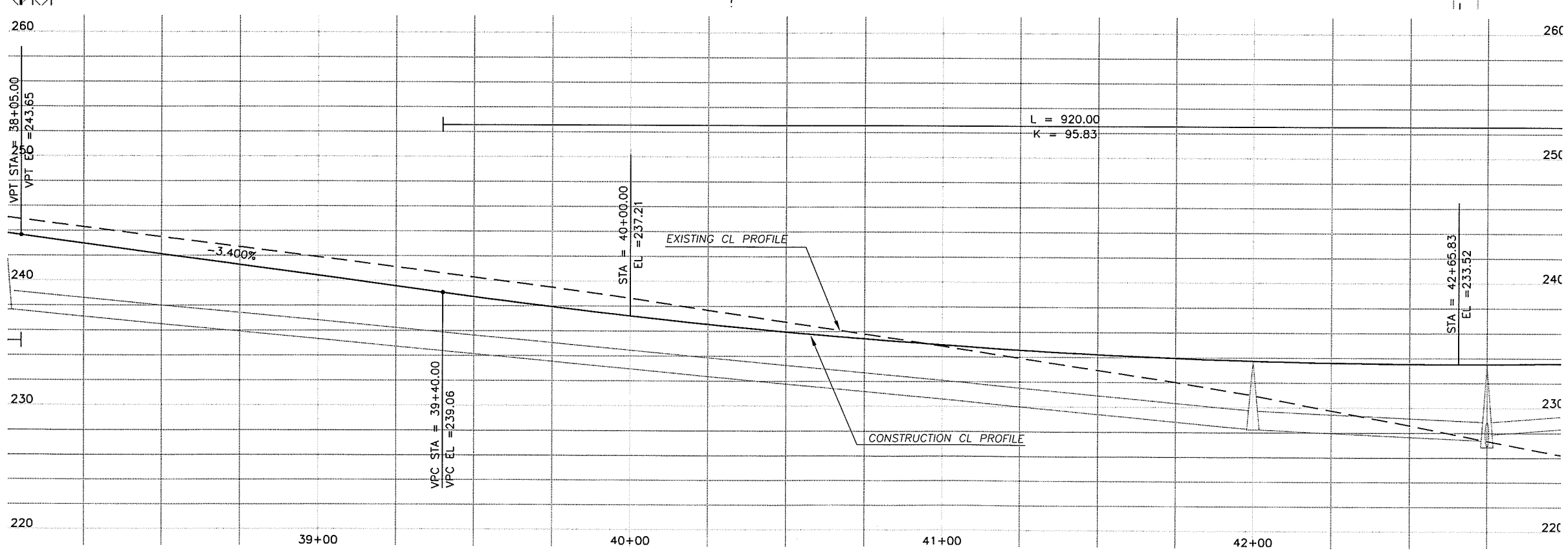

DESIGNED MME
DRAWN RK
CRP 381122
HOR. 20
VERT. 5
DATE 12/22/03
DWG: PP4
SHEET X OF X

CALL 48 HOURS BEFORE YOU DIG
1-800-553-4344
"It's the Law"
NORTHWEST UTILITIES NOTIFICATION CENTER

JOHN M. BIRCK
STATE OF WASHINGTON
29303
REGISTERED PROFESSIONAL ENGINEER
EXPIRES MAY 26, 2005

DESIGN & ENGINEERING DIVISION
DESIGN SECTION

NE 179TH STREET (I-5 TO NE 50TH AVE)
PLAN & PROFILE STA 38+00 TO STA 43+00

proud past, promising future
CLARK COUNTY
WASHINGTON

N:\CIP\PROJECTS\381122-NE179th-East\DESIGN\Dwg\179thEPP4.dwg, 12/13/2003 12:46:28 PM, kerlinr

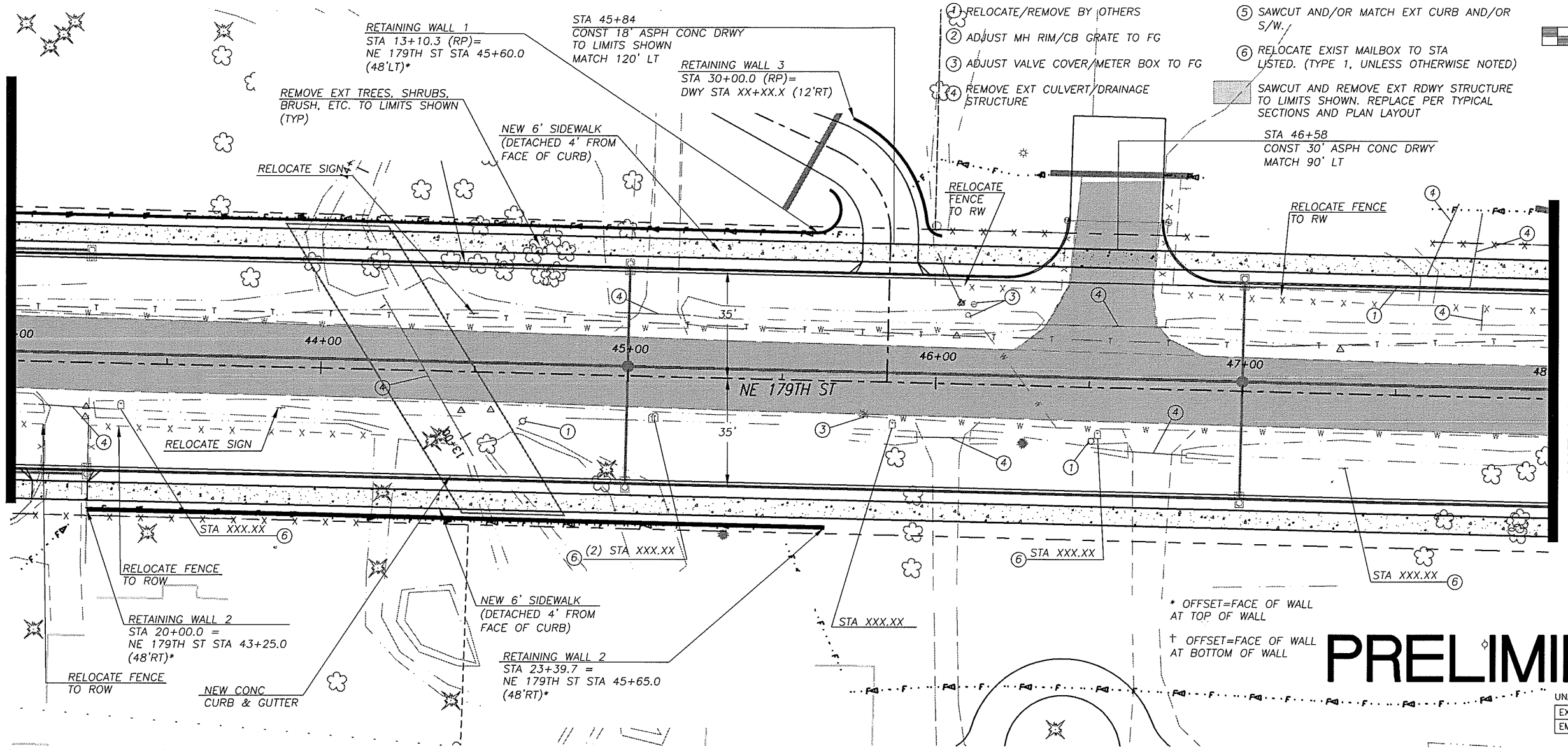

PRELIMINARY

UNADJUSTED EARTHWORK QUANTITIES

EXCAVATION	X	C.Y.
EMBANKMENT	X	C.Y.

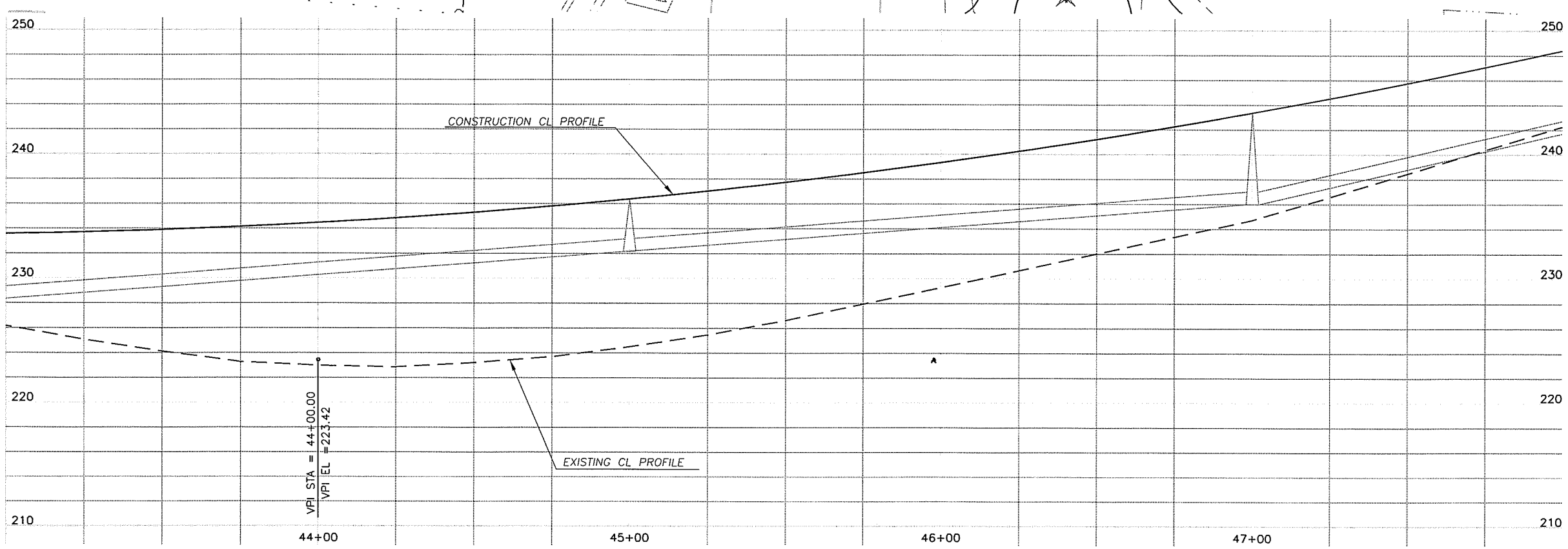

DESIGNED MME
DRAWN RK
CRP 381122
HOR. 20
VERT. 5
DATE 12/22/03
DWG: PP5
SHEET X OF X

CALL 48 HOURS BEFORE YOU DIG 1-800-553-4344 "It's the Law" NORTHWEST UTILITIES NOTIFICATION CENTER

MICHAEL M. EMRICK STATE OF WASHINGTON 20015 REGISTERED PROFESSIONAL ENGINEER EXPIRES JAN 26, 2005

DESIGN & ENGINEERING DIVISION
DESIGN SECTION

NE 179TH STREET (I-5 TO NE 50TH AVE)
PLAN & PROFILE STA 43+00 TO STA 48+00

proud past, promising future
CLARK COUNTY WASHINGTON

N:\CIP\PROJECTS\381122-NE179th-East\DESIGN\Dwg\179thEPP5.dwg, 12/13/2003 1:08:01 PM, kerlinr

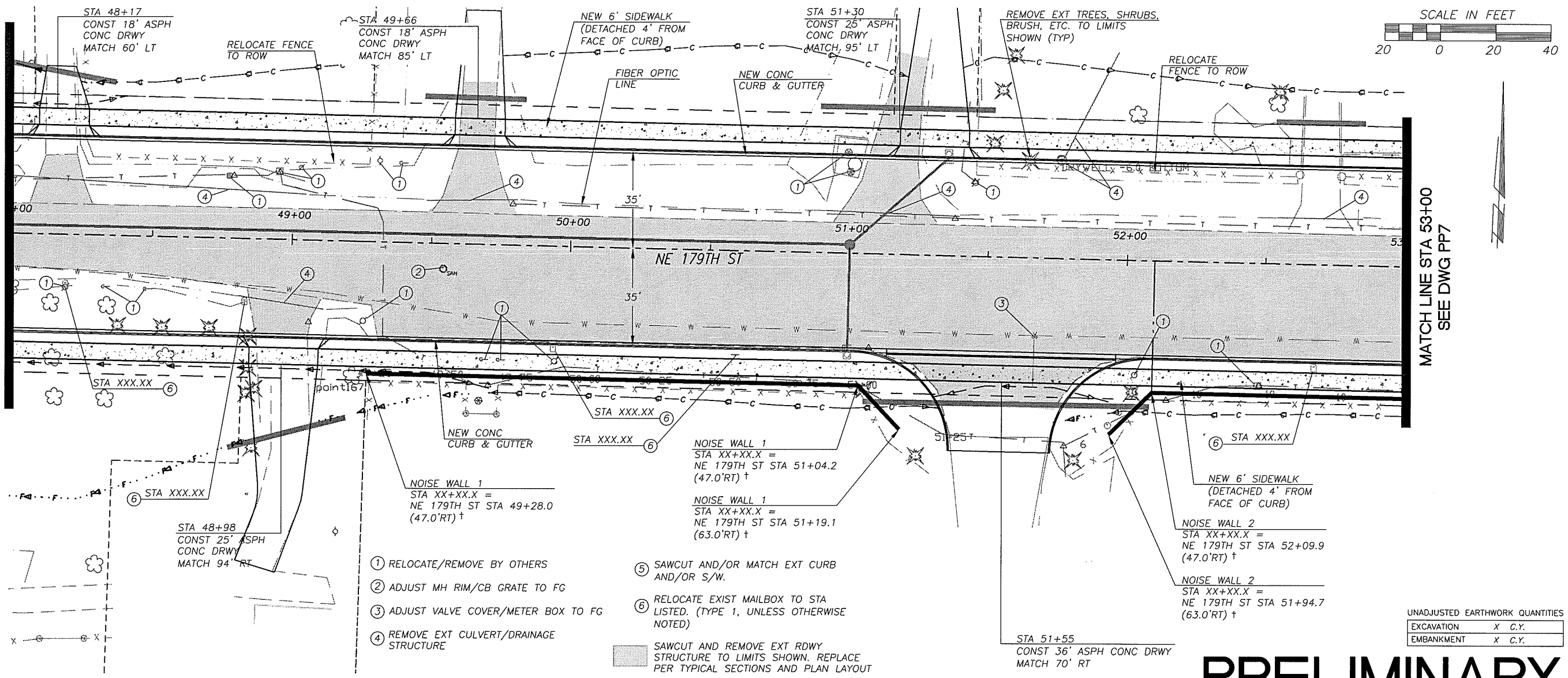

1. RELOCATE/REMOVE BY OTHERS
2. ADJUST MH RIM/CB GRATE TO FG
3. ADJUST VALVE COVER/METER BOX TO FG
4. REMOVE EXT CULVERT/DRAINAGE STRUCTURE
5. SAWCUT AND/OR MATCH EXT CURB AND/OR S/W.
6. RELOCATE EXIST MAILBOX TO STA LISTED. (TYPE 1, UNLESS OTHERWISE NOTED)

SAWCUT AND REMOVE EXT RDWY STRUCTURE TO LIMITS SHOWN. REPLACE PER TYPICAL SECTIONS AND PLAN LAYOUT

UNADJUSTED EARTHWORK QUANTITIES

EXCAVATION	X C.Y.
EMBANKMENT	X C.Y.

PRELIMINARY

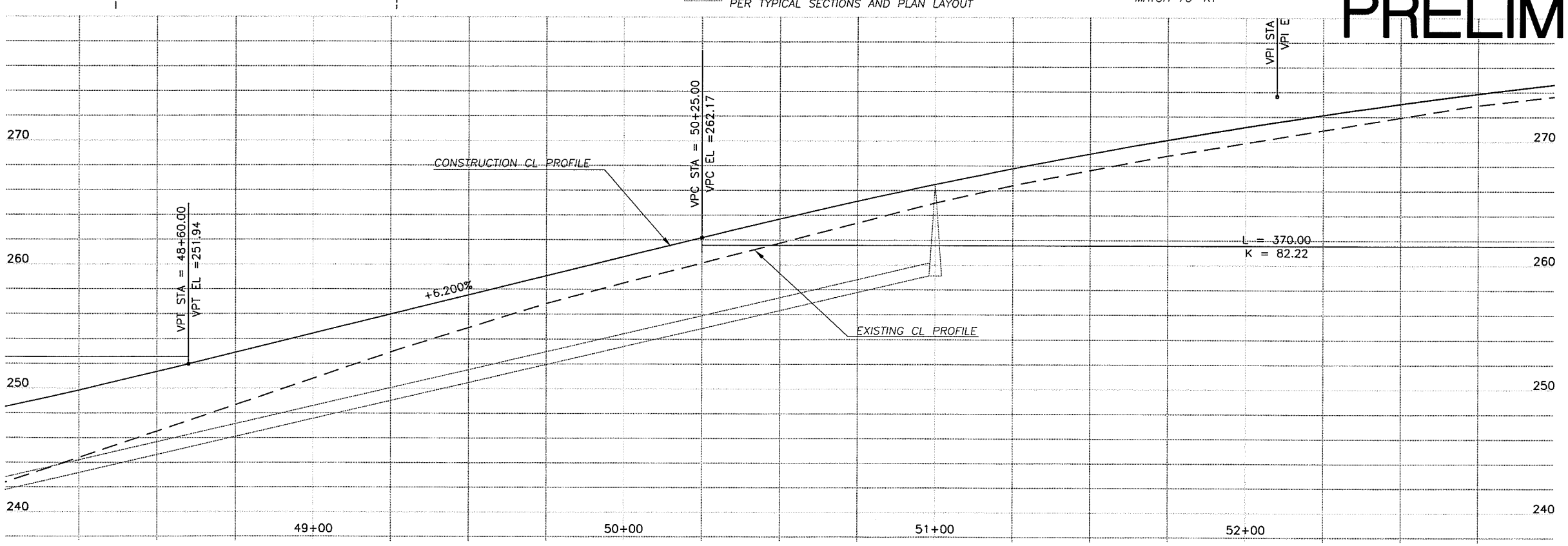

DESIGNED	MME
DRAWN	RK
CRP	381122
HOR.	20
VERT.	5
DATE	12/22/03
DWG:	PP6
SHEET X	OF X

CALL 48 HOURS BEFORE YOU DIG 1-800-553-4344 "It's the Law" NORTHWEST UTILITIES NOTIFICATION CENTER

EARL M. EMERICK STATE OF WASHINGTON 20213 REGISTERED PROFESSIONAL ENGINEER EXPIRES-MAY 26, 2003

DESIGN & ENGINEERING DIVISION
DESIGN SECTION

NE 179TH STREET (I-5 TO NE 50TH AVE)
PLAN & PROFILE STA 48+00 TO STA 53+00

proud past, promising future
CLARK COUNTY WASHINGTON

N:\CIP\PROJECTS\381122-NE179th-East\DESIGN\Dwg\179thEPP6.dwg, 12/18/2003 1:14:16 PM, kerlinr

PRELIMINARY

SCALE IN FEET
20 0 20 40

MATCH LINE STA 53+00
SEE DWG PP6

RELOCATE FENCE TO 20' BOW

RELOCATE FENCE TO ROW

STA 53+19
CONST 18' ASPH CONC DRWY MATCH 65' LT

STA 53+93
CONST 18' ASPH CONC DRWY MATCH 60' LT

FIBER OPTIC LINE

NEW CONC CURB & GUTTER

NEW 6' SIDEWALK (DETACHED 4' FROM FACE OF CURB)

STA 55+93
CONST 20' ASPH CONC DRWY MATCH 65' LT

REMOVE EXT TREES, SHRUBS, BRUSH, ETC. TO LIMITS SHOWN (TYP.)

RELOCATE FENCE

54+00 55+00 56+00 57+00 58

35'

NE 179TH ST

35'

STA XXX.XX (2)

STA XXX.XX

NEW CONC CURB & GUTTER

NEW 6' SIDEWALK (DETACHED 4' FROM FACE OF CURB)

STA XXX.XX

NOISE WALL 2
STA XX+XX.X = NE 179TH ST STA 56+66.9 (47.0'RT) †

NOISE WALL 2
STA XX+XX.X = NE 179TH ST STA 56+73.3 (54.0'RT) †

STA 57+15 CONST 36' ASPH CONC DRWY MATCH 80' RT

NOISE WALL 3
STA XX+XX.X = NE 179TH ST STA 57+61.9 (47.0'RT) †

NOISE WALL 3
STA XX+XX.X = NE 179TH ST STA 57+55.3 (54.0'RT) †

MATCH LINE STA 58+00
SEE DWG PP9

1. RELOCATE/REMOVE BY OTHERS
2. ADJUST MH RIM/CB GRATE TO FG
3. ADJUST VALVE COVER/METER BOX TO FG
4. REMOVE EXT CULVERT/DRAINAGE STRUCTURE
5. SAWCUT AND/OR MATCH EXT CURB AND/OR S/W.
6. RELOCATE EXIST MAILBOX TO STA LISTED. (TYPE 1, UNLESS OTHERWISE NOTED)

SAWCUT AND REMOVE EXT RDWY STRUCTURE TO LIMITS SHOWN. REPLACE PER TYPICAL SECTIONS AND PLAN LAYOUT

UNADJUSTED EARTHWORK QUANTITIES

EXCAVATION	X	C.Y.
EMBANKMENT	X	C.Y.

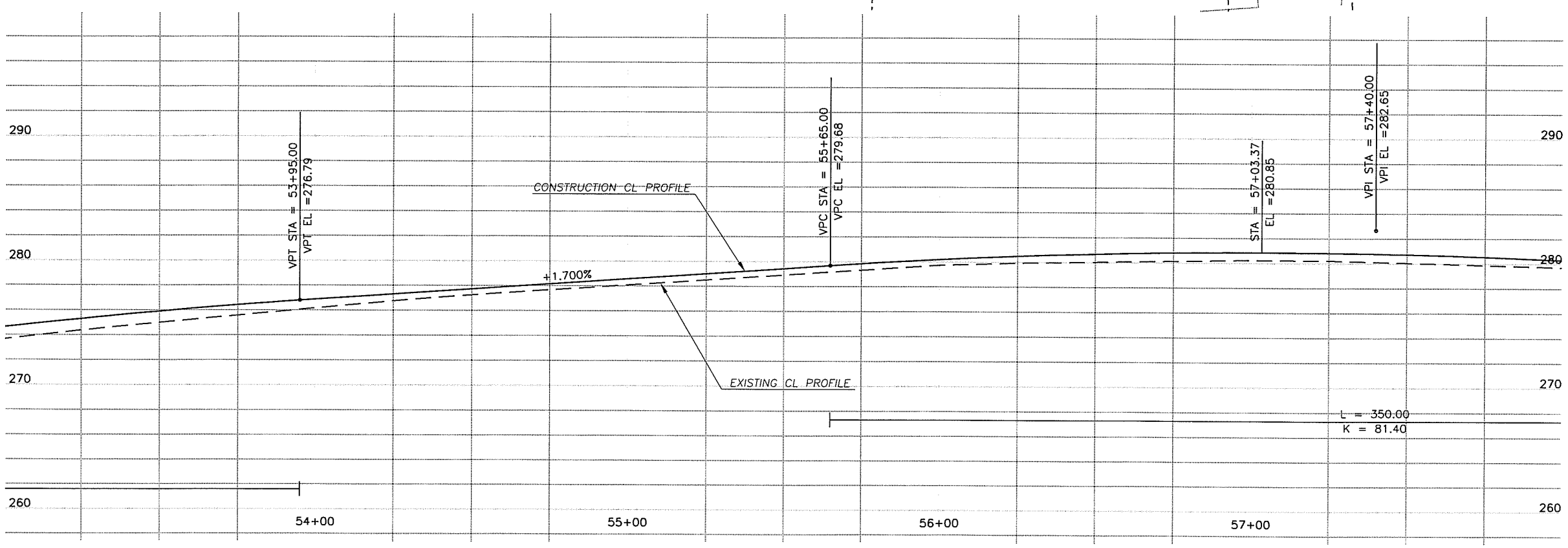

DESIGNED MME
DRAWN RK
CRP 381122
HOR. 20
VERT. 5
DATE 12/22/03
DWG: PP7
SHEET X OF X

CALL 48 HOURS BEFORE YOU DIG
1-800-553-4344
"It's the Law"
NORTHWEST UTILITIES NOTIFICATION CENTER

STATE OF WASHINGTON
JEFFREY M. BURLOK
29030
PROFESSIONAL ENGINEER
EXPIRES MAY 26, 2005

DESIGN & ENGINEERING DIVISION
DESIGN SECTION

NE 179TH STREET (I-5 TO NE 50TH AVE)
PLAN & PROFILE STA 53+00 TO STA 58+00

proud past, promising future
CLARK COUNTY WASHINGTON

N:\CIP\PROJECTS\381122-NE179th-East\DESIGN\Dwg\179thEPP7.dwg, 12/13/2003 1:35:40 PM, kerlinr

PRELIMINARY

SCALE IN FEET
20 0 20 40

MATCH LINE STA 58+00
SEE DWG PP7

FIBER OPTIC LINE

STA 59+35
CONST 25' ASPH CONC DRWY
MATCH 60' LT

RELOCATE STRUCTURES (2)

NEW 6' SIDEWALK
(DETACHED 4' FROM FACE OF CURB)

NEW CONC CURB & GUTTER

STA 60+85
CONST 20' ASPH CONC DRWY
MATCH 55' LT

RELOCATE STRUCTURE

59+00 60+00 61+00 62+00 63

35' 35'

NE 179TH ST

MATCH LINE STA 63+00
SEE DWG PP9

STA XXX.XX

STA XXX.XX (4)

NEW CONC. CURB & GUTTER

NEW 6' SIDEWALK
(DETACHED 4' FROM FACE OF CURB)

NOISE WALL 3
STA XX+XX.X =
NE 179TH ST STA 62+34.5
(47.0'RT) †

STA 62+99
CONST 15' ASPH CONC DRWY
MATCH 90' RT

REMOVE EXT TREES, SHRUBS, BRUSH, ETC. TO LIMITS SHOWN (TYP)

1. RELOCATE/REMOVE BY OTHERS
2. ADJUST MH RIM/CB GRATE TO FG
3. ADJUST VALVE COVER/METER BOX TO FG
4. REMOVE EXT CULVERT/DRAINAGE STRUCTURE
5. SAWCUT AND/OR MATCH EXT CURB AND/OR S/W.
6. RELOCATE EXIST MAILBOX TO STA LISTED. (TYPE 1, UNLESS OTHERWISE NOTED)

SAWCUT AND REMOVE EXT RDWY STRUCTURE TO LIMITS SHOWN. REPLACE PER TYPICAL SECTIONS AND PLAN LAYOUT

UNADJUSTED EARTHWORK QUANTITIES

EXCAVATION	X	C.Y.
EMBANKMENT	X	C.Y.

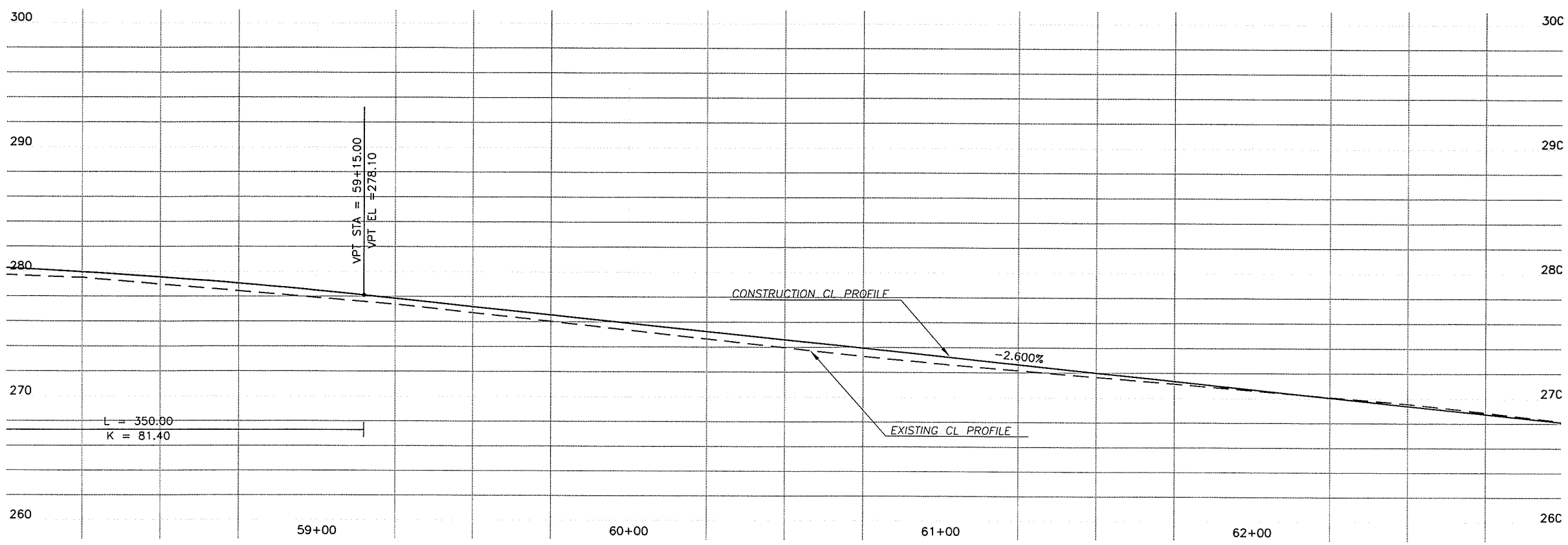

DESIGNED	MME
DRAWN	RK
CRP	381122
HOR.	20
VERT.	5
DATE	12/22/03
DWG:	PP8
SHEET X	OF X

CALL 48 HOURS BEFORE YOU DIG 1-800-553-4344 "It's the Law" NORTHWEST UTILITIES NOTIFICATION CENTER

MICHAEL M. EARLICK STATE OF WASHINGTON 29532 REGISTERED PROFESSIONAL ENGINEER EXPIRES: MAY 28, 2005

DESIGN & ENGINEERING DIVISION
DESIGN SECTION

NE 179TH STREET (I-5 TO NE 50TH AVE)
PLAN & PROFILE STA 58+00 TO STA 63+00

proud past, promising future
CLARK COUNTY WASHINGTON

N:\CIP\PROJECTS\381122-NE179th-East\DESIGN\Dwg\179thEPP8.dwg, 12/13/2003 1:42:54 PM, kerlinr

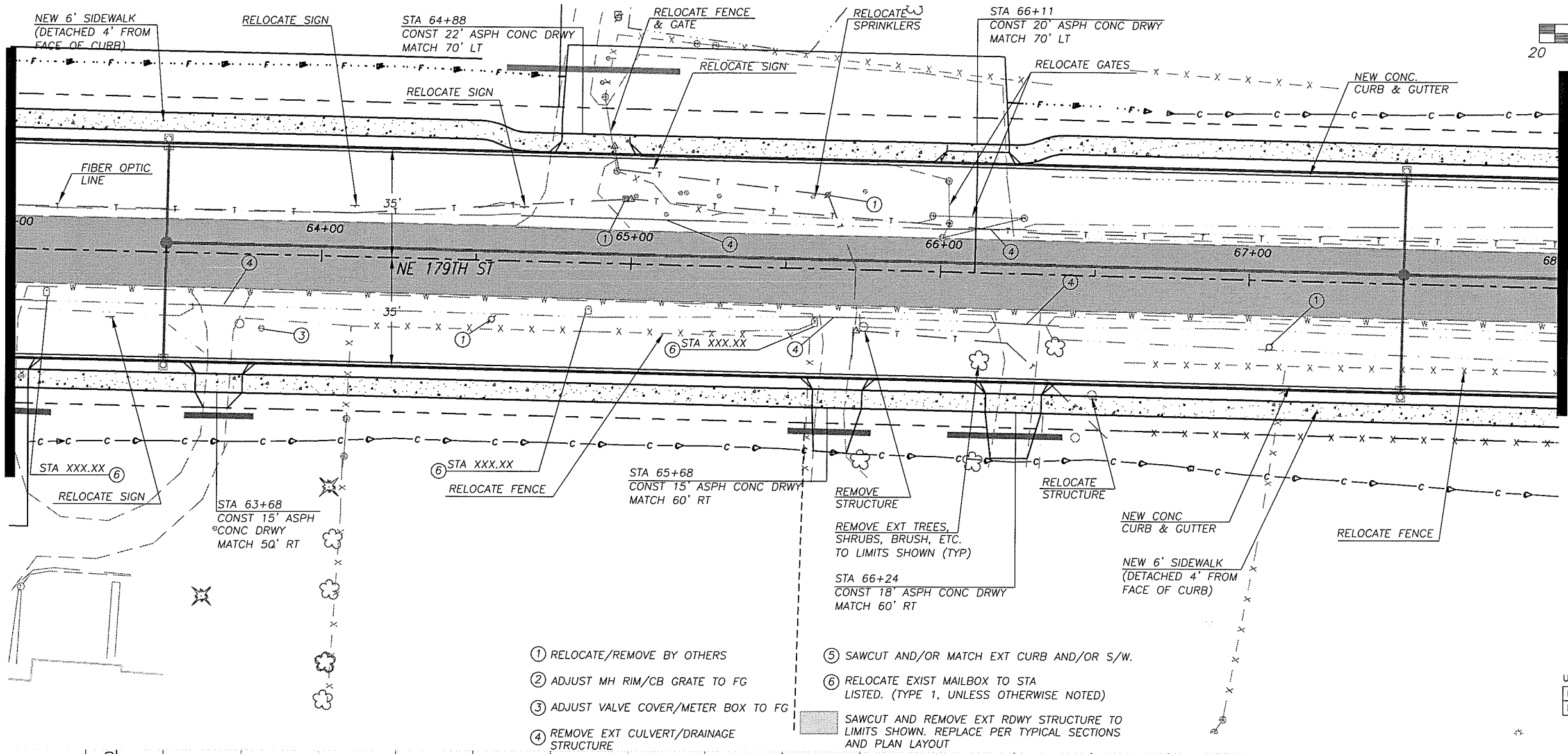

1. RELOCATE/REMOVE BY OTHERS
2. ADJUST MH RIM/CB GRATE TO FG
3. ADJUST VALVE COVER/METER BOX TO FG
4. REMOVE EXT CULVERT/DRAINAGE STRUCTURE
5. SAWCUT AND/OR MATCH EXT CURB AND/OR S/W.
6. RELOCATE EXIST MAILBOX TO STA LISTED. (TYPE 1, UNLESS OTHERWISE NOTED)

SAWCUT AND REMOVE EXT RDWY STRUCTURE TO LIMITS SHOWN. REPLACE PER TYPICAL SECTIONS AND PLAN LAYOUT

UNADJUSTED EARTHWORK QUANTITIES

EXCAVATION	X C.Y.
EMBANKMENT	X C.Y.

PRELIMINARY

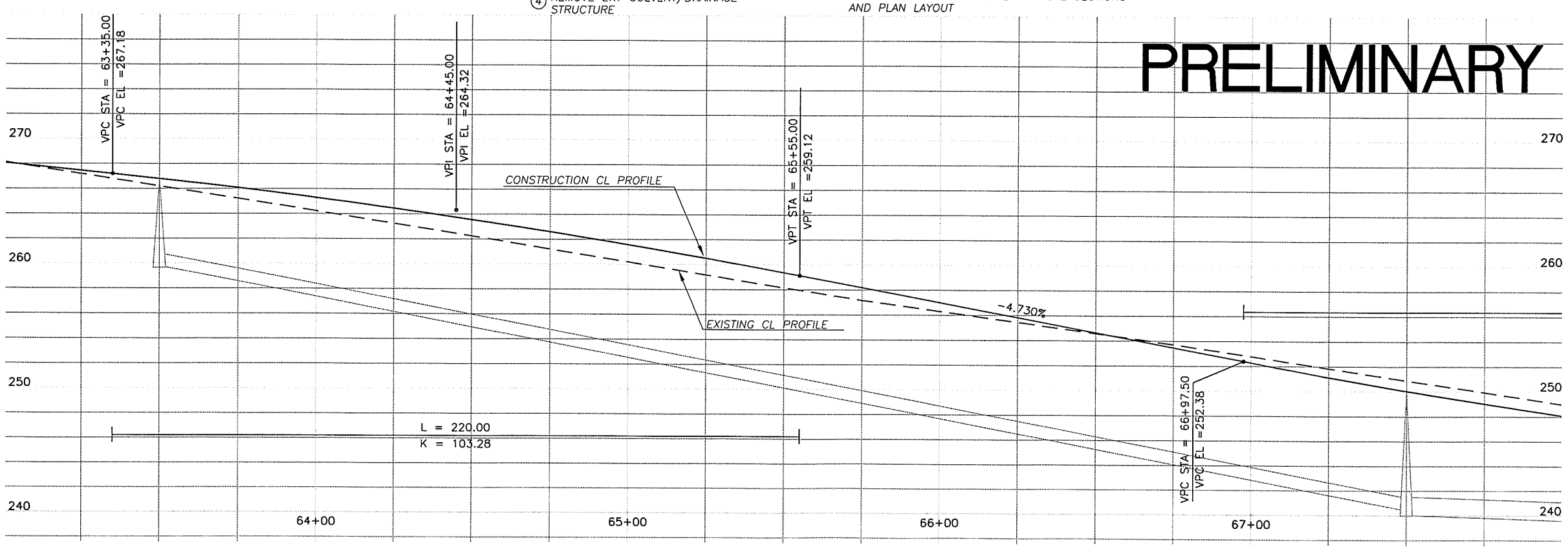

DESIGNED	MME
DRAWN	RK
CRP	381122
HOR.	20
VERT.	5
DATE	12/22/03
DWG:	PP9
SHEET X	OF X

CALL 48 HOURS BEFORE YOU DIG 1-800-553-4344 "It's the Law" NORTHWEST UTILITIES NOTIFICATION CENTER

EARL M. EMRICK STATE OF WASHINGTON 29330 REGISTERED PROFESSIONAL ENGINEER EXPIRES: MAY 26, 2005

DESIGN & ENGINEERING DIVISION
DESIGN SECTION

NE 179TH STREET (I-5 TO NE 50TH AVE)
PLAN & PROFILE STA 63+00 TO STA 68+00

proud past, promising future

CLARK COUNTY WASHINGTON

N:\CIP\PROJECTS\381122-NE179th-East\DESIGN\Dwg\179thEPP9.dwg, 12/13/2003 1:45:58 PM, kerlinr

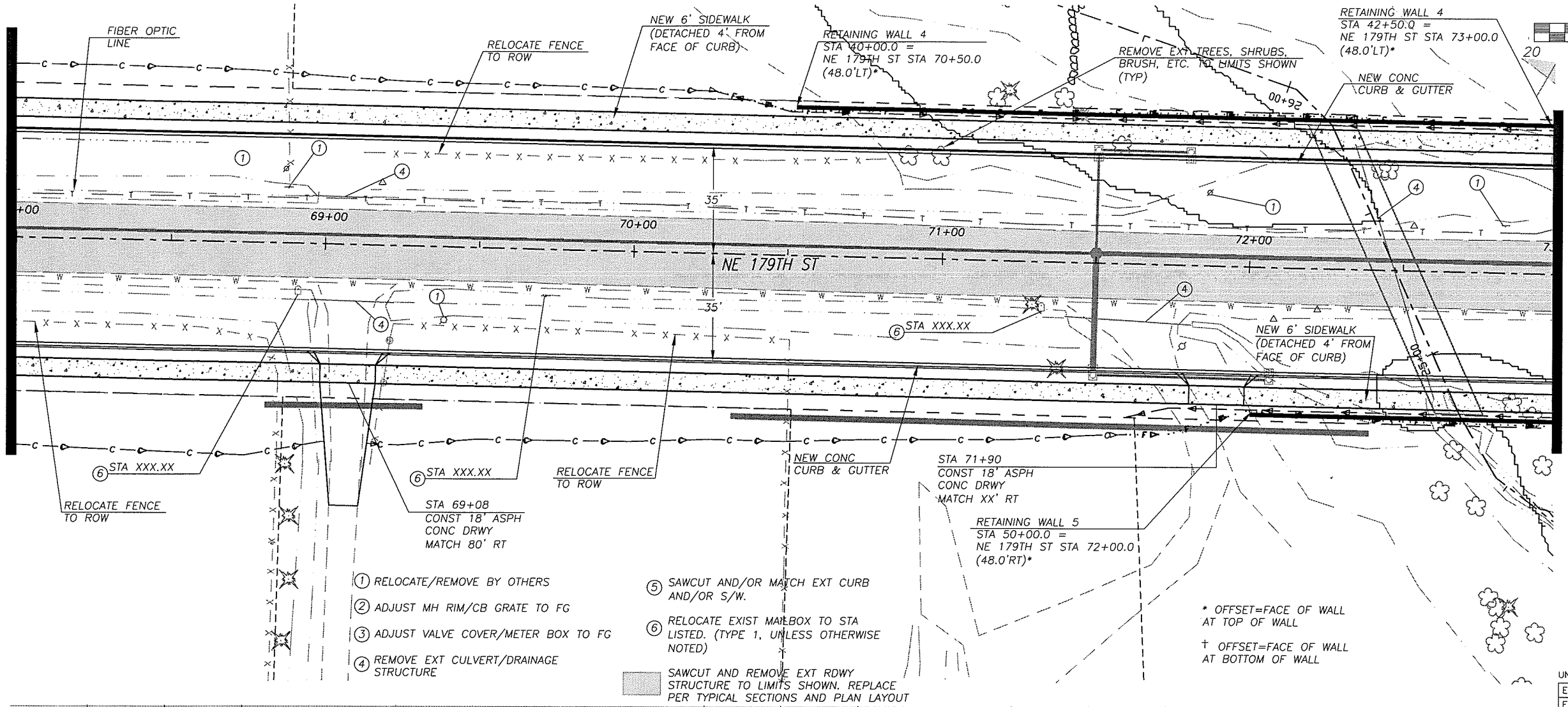

UNADJUSTED EARTHWORK QUANTITIES

EXCAVATION	X C.Y.
EMBANKMENT	X C.Y.

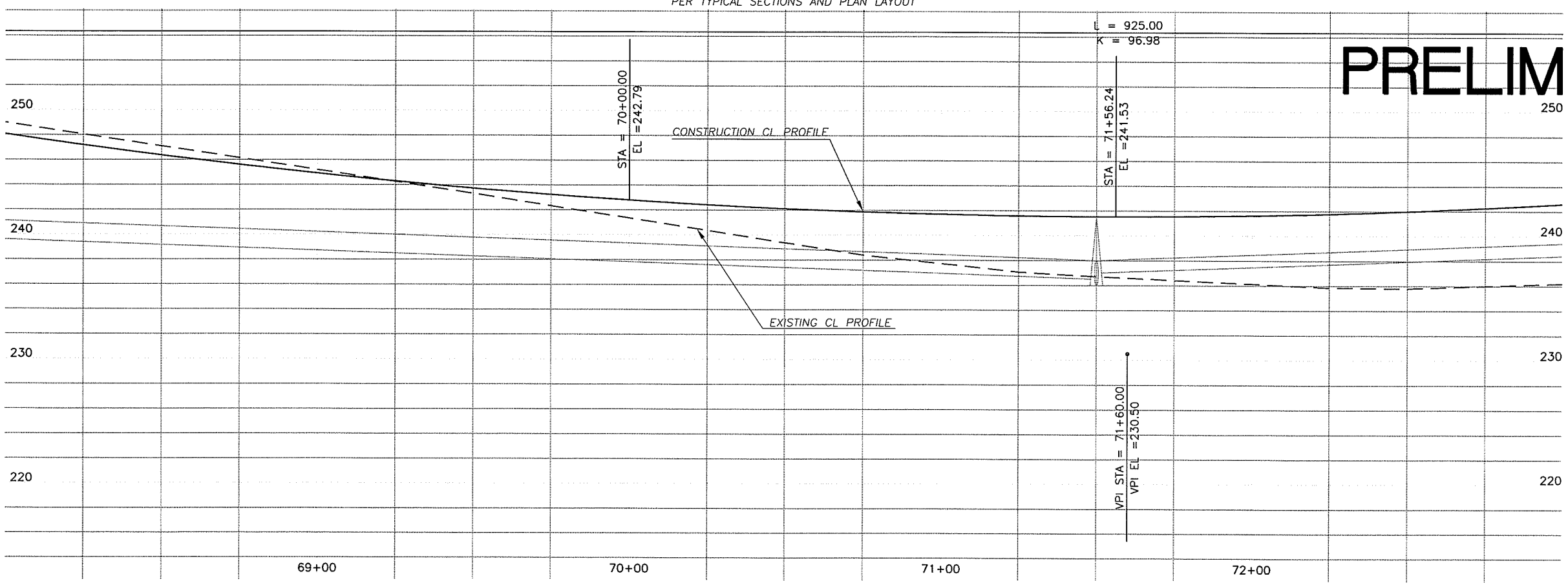

DESIGNED	MME
DRAWN	RK
CRP	381122
HOR.	20
VERT.	5
DATE	12/22/03
DWG:	PP10
SHEET X	OF X

CALL 48 HOURS BEFORE YOU DIG
1-800-553-4344
"It's the Law"
NORTHWEST UTILITIES NOTIFICATION CENTER

STATE OF WASHINGTON
RICHARD M. BURCK
29030
REGISTERED PROFESSIONAL ENGINEER
EXPIRES: MAY 26, 2005

DESIGN & ENGINEERING DIVISION
DESIGN SECTION

NE 179TH STREET (I-5 TO NE 50TH AVE)
PLAN & PROFILE STA 68+00 TO STA 73+00

proud past, promising future
CLARK COUNTY
WASHINGTON

N:\CIP\PROJECTS\381122-NE179th-East\DESIGN\Dwg\179thEPP10.dwg, 12/18/2003 1:16:46 PM, kerlinr

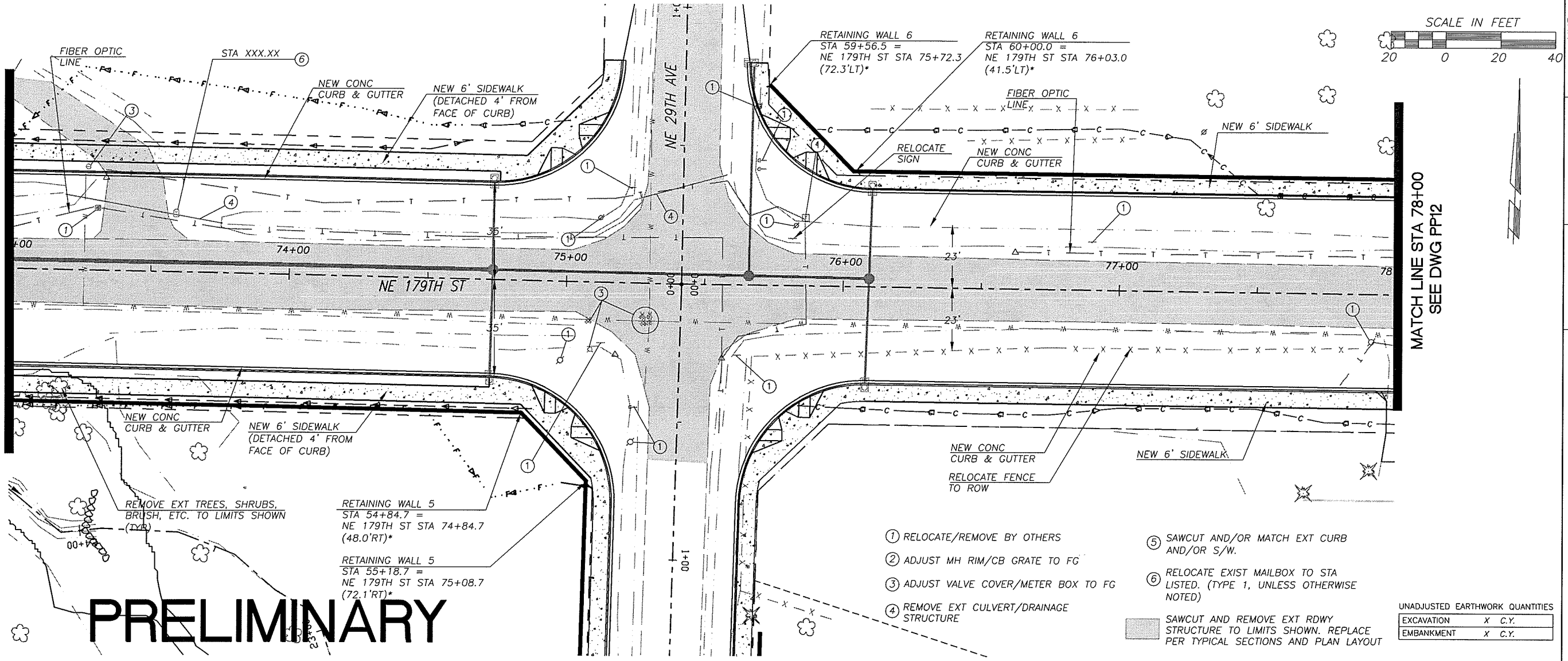

PRELIMINARY

UNADJUSTED EARTHWORK QUANTITIES

EXCAVATION	X	C.Y.
EMBANKMENT	X	C.Y.

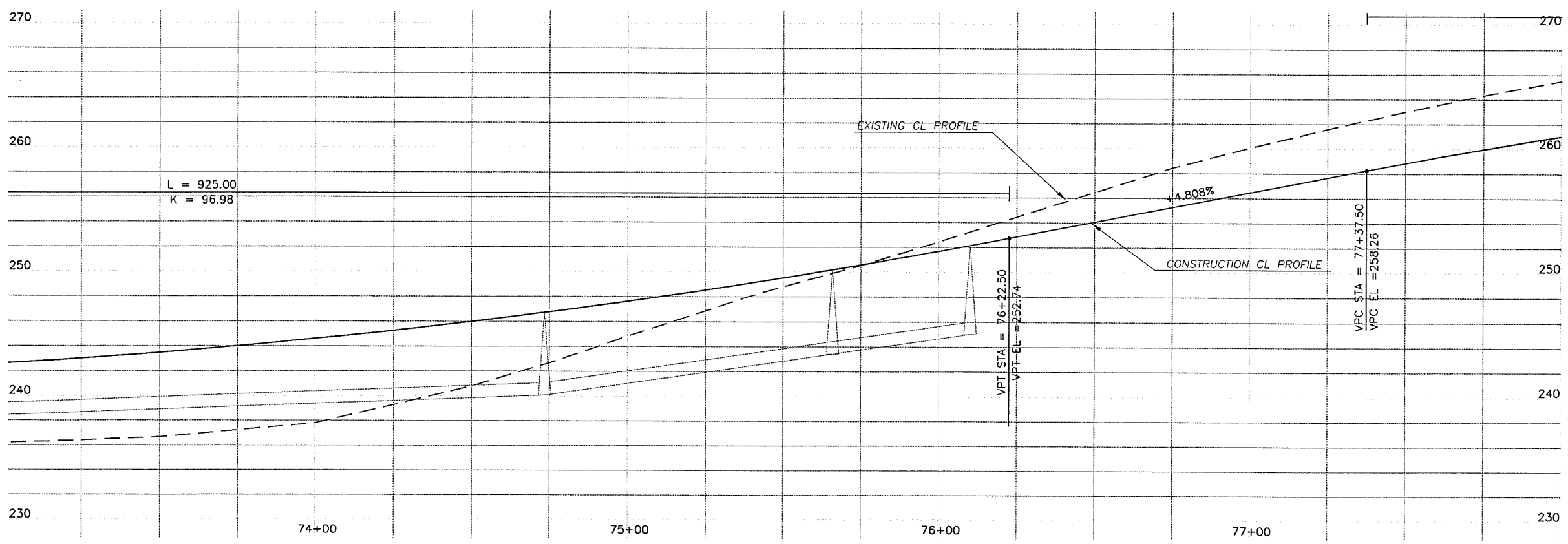

DESIGNED	MME
DRAWN	RK
CRP	381122
HOR.	20
VERT.	5
DATE	12/22/03
DWG:	PP11
SHEET X	OF X

CALL 48 HOURS BEFORE YOU DIG 1-800-553-4344 "It's the Law" NORTHWEST UTILITIES NOTIFICATION CENTER

STATE OF WASHINGTON MICHAEL M. ERICKSON 29630 REGISTERED PROFESSIONAL ENGINEER EXPIRES: MAY 26, 2005

DESIGN & ENGINEERING DIVISION
DESIGN SECTION

NE 179TH STREET (I-5 TO NE 50TH AVE)
PLAN & PROFILE STA 73+00 TO STA 78+00

proud past, promising future
CLARK COUNTY WASHINGTON

N:\CIP\PROJECTS\381122-NE179th-East\DESIGN\Dwg\179thEPP11.dwg, 12/18/2003 1:18:04 PM, kerlinr

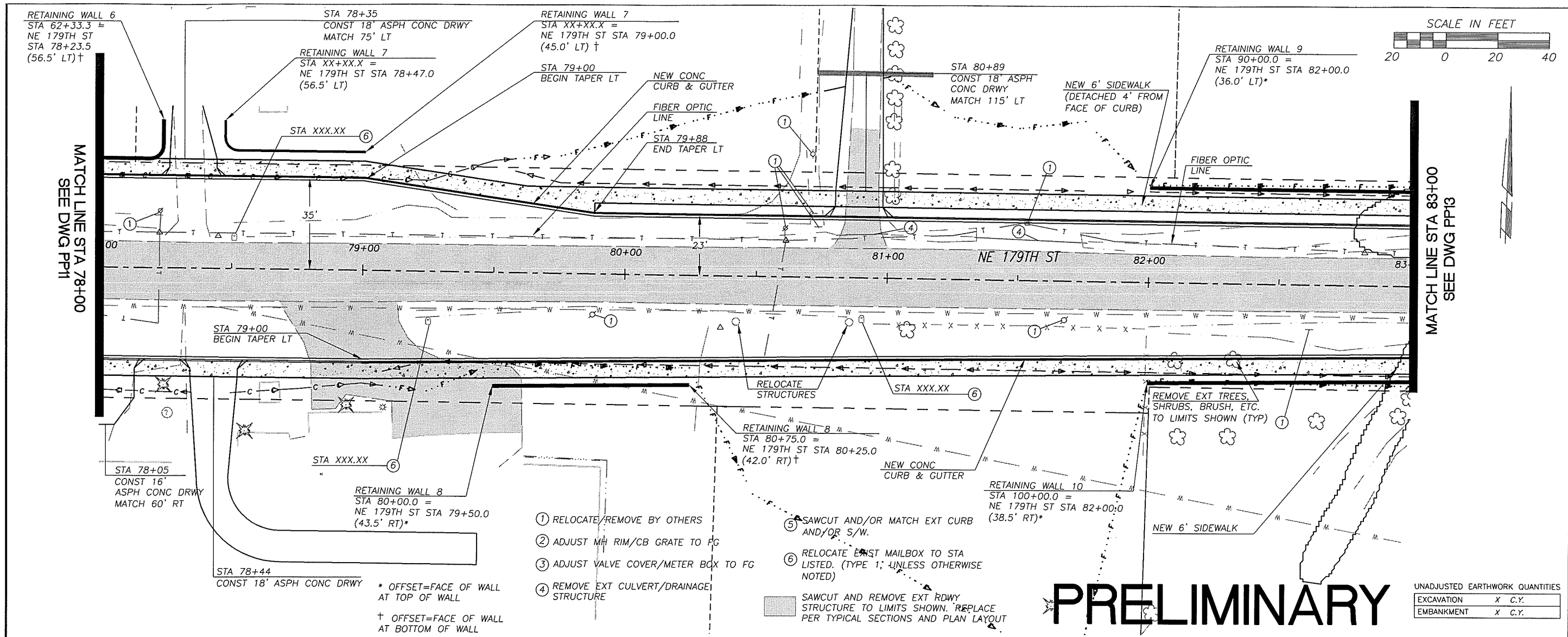

UNADJUSTED EARTHWORK QUANTITIES

EXCAVATION	X	C.Y.
EMBANKMENT	X	C.Y.

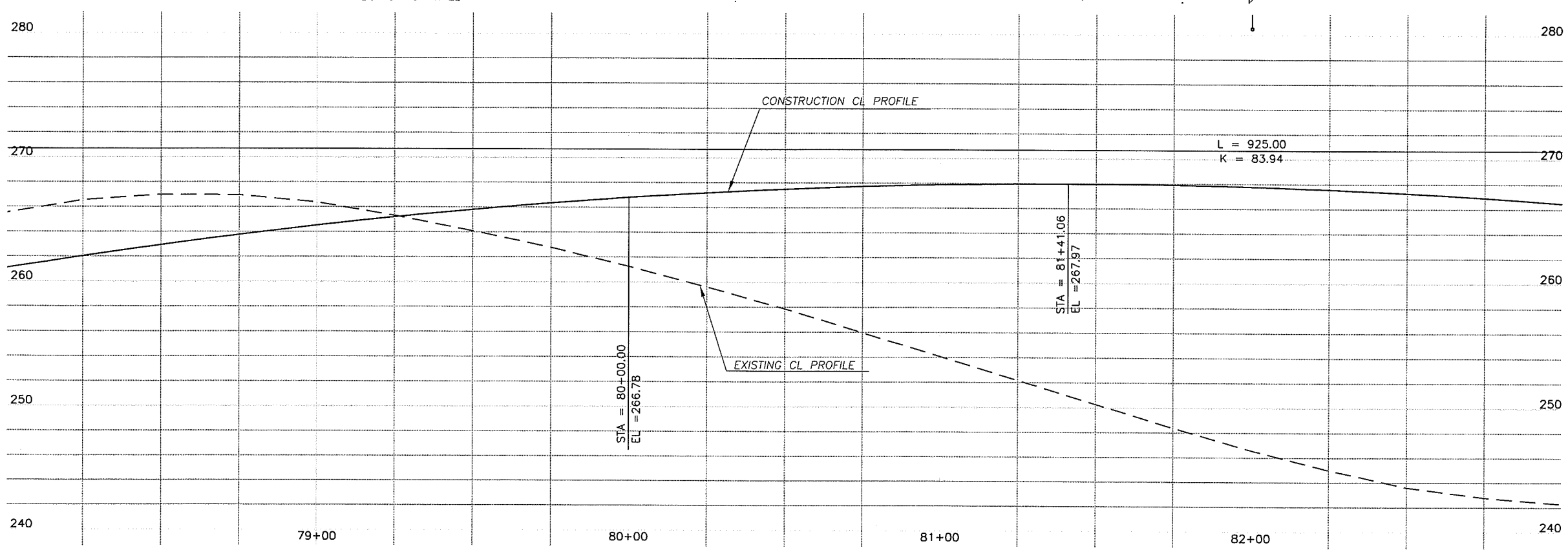

DESIGNED	MME		
DRAWN	RK		
CRP	381122	HOR.	20
		VERT.	5
		DATE	12/22/03
		DWG:	PP12
		SHEET X	OF X

CALL 48 HOURS BEFORE YOU DIG
1-800-553-4344
"It's the Law"
NORTHWEST UTILITIES NOTIFICATION CENTER

STEVEN M. ERICKSON
STATE OF WASHINGTON
29930
REGISTERED PROFESSIONAL ENGINEER
EXPIRES MAY 28, 2005

DESIGN & ENGINEERING DIVISION
DESIGN SECTION

NE 179TH STREET (I-5 TO NE 50TH AVE)
PLAN & PROFILE STA 78+00 TO STA 83+00

proud past, promising future
CLARK COUNTY
WASHINGTON

N:\CIP\PROJECTS\381122-NE179th-East\DESIGN\Dwg\179thEPP12.dwg, 12/18/2003 1:19:03 PM, kerlinr

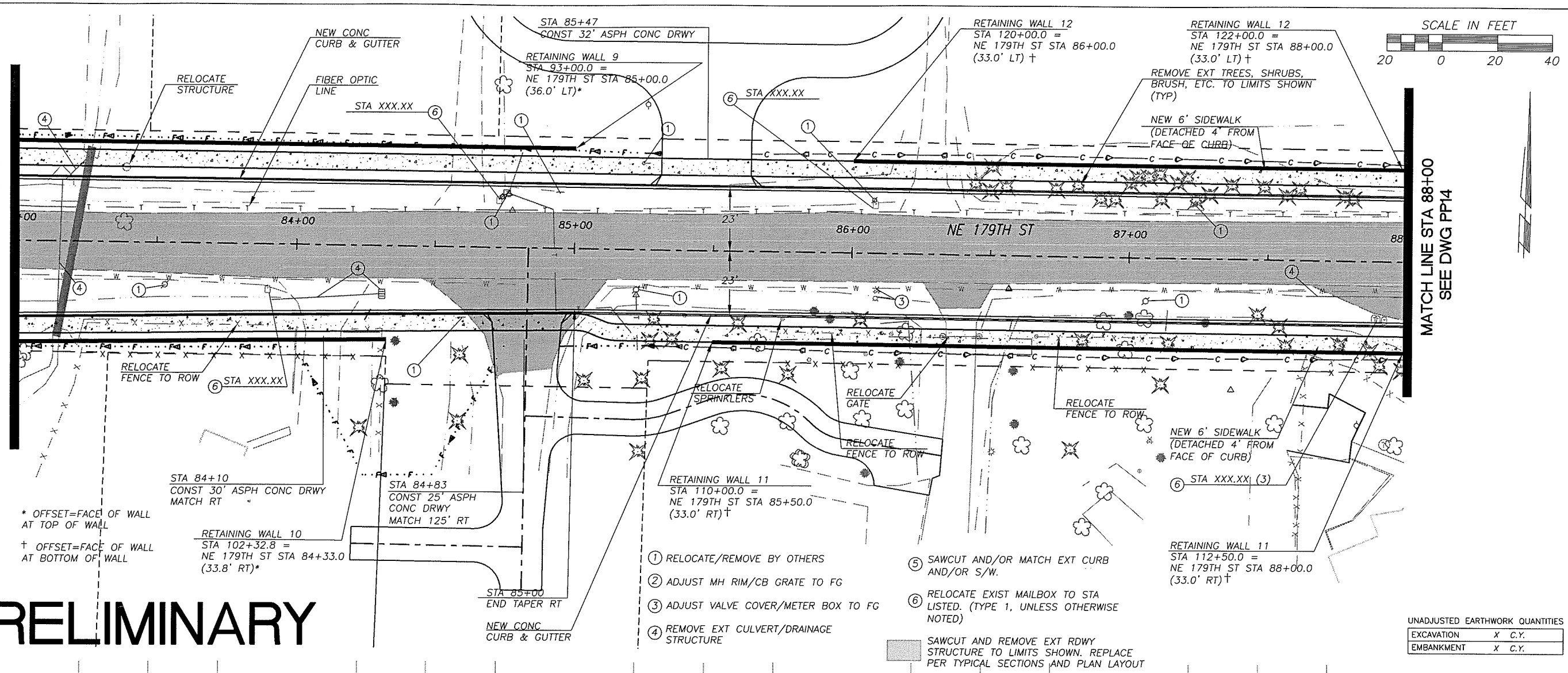

PRELIMINARY

UNADJUSTED EARTHWORK QUANTITIES

EXCAVATION	X	C.Y.
EMBANKMENT	X	C.Y.

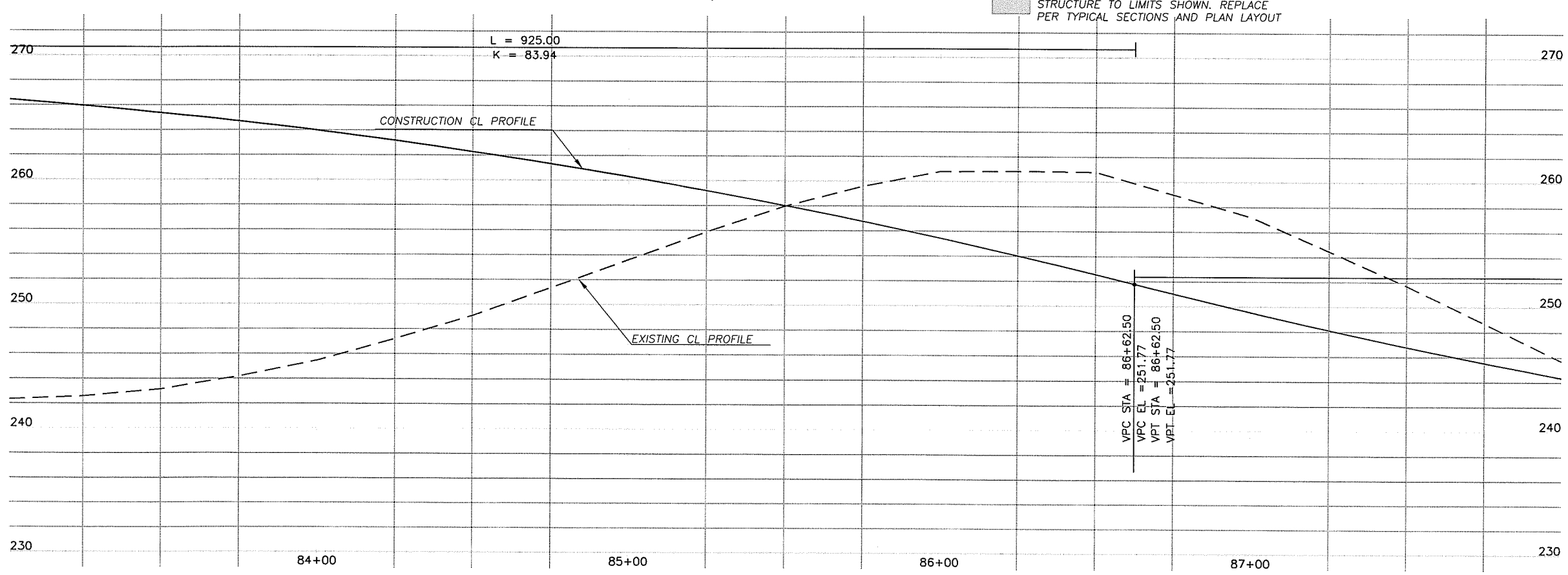

DESIGNED MME
DRAWN RK
CRP 381122
HOR. 20
VERT. 5
DATE 12/22/03
DWG: PP13
SHEET X OF X

CALL 48 HOURS BEFORE YOU DIG
1-800-553-4344
"It's the Law"
NORTHWEST UTILITIES NOTIFICATION CENTER

STATE OF WASHINGTON
MICHAEL R. BURCK
29930
REGISTERED PROFESSIONAL ENGINEER
EXPIRES: MAY 26, 2005

DESIGN & ENGINEERING DIVISION
DESIGN SECTION

NE 179TH STREET (I-5 TO NE 50TH AVE)
PLAN & PROFILE STA 83+00 TO STA 88+00

proud past, promising future
CLARK COUNTY WASHINGTON

N:\CIP\PROJECTS\381122-NE179th-East\DESIGN\Dwg\179thEPP13.dwg, 12/13/2003 3:13:53 PM, kerlinr

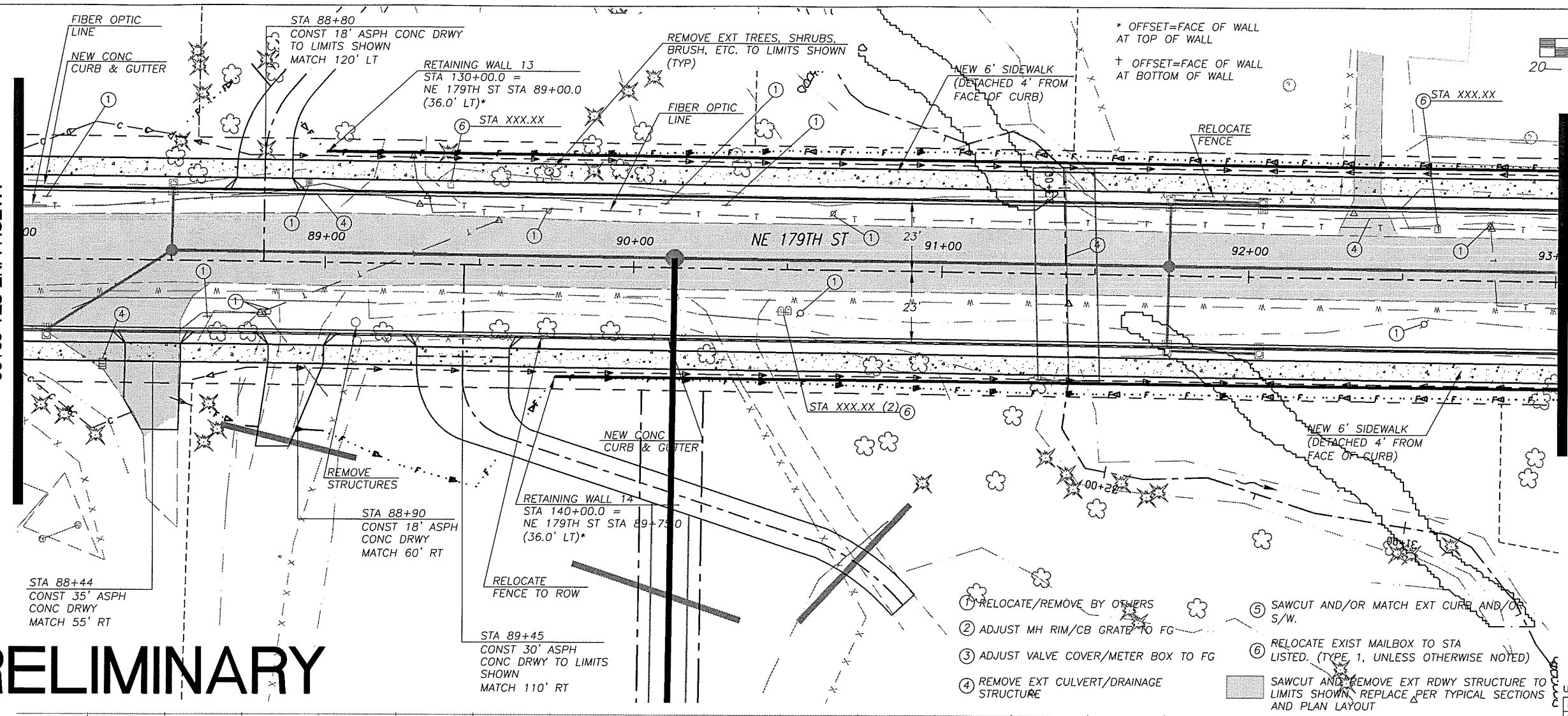

UNADJUSTED EARTHWORK QUANTITIES	
EXCAVATION	X C.Y.
EMBANKMENT	X C.Y.

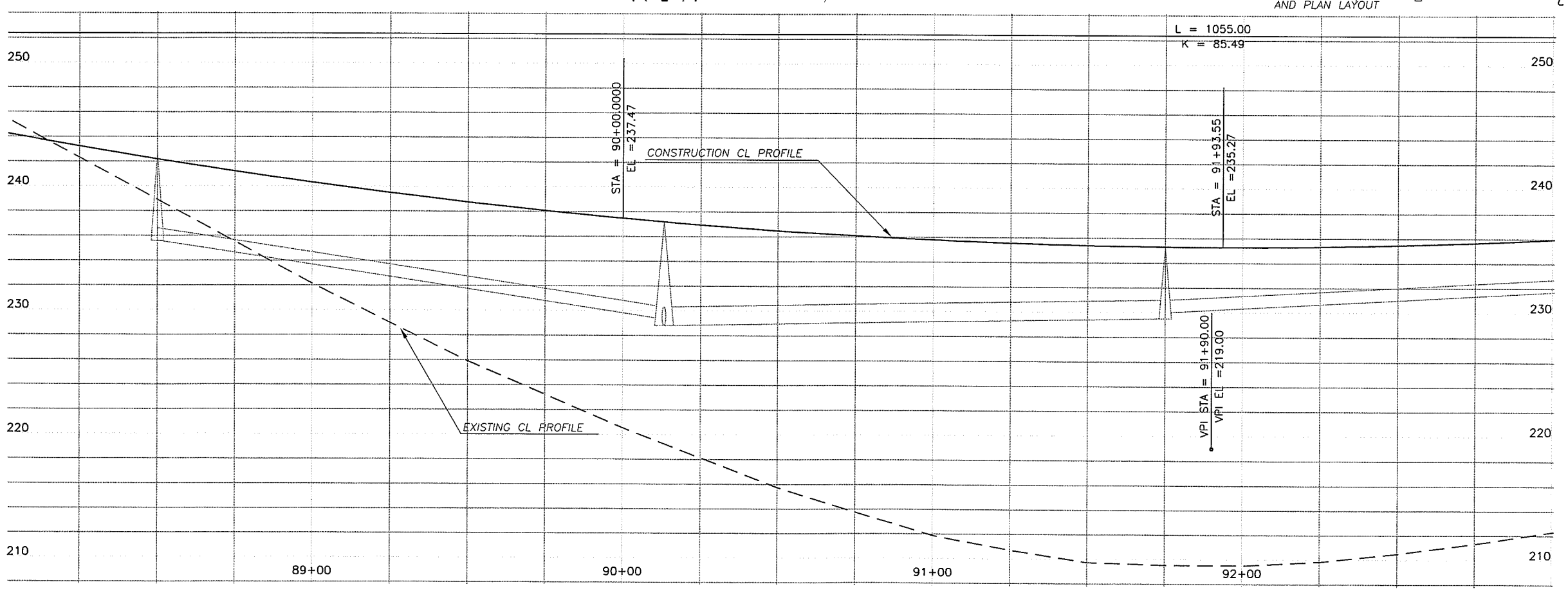

DESIGNED	MME		
DRAWN	RK		
CRP	381122	HOR.	20
		VERT.	5
		DATE	12/22/03
		DWG:	PP14
		SHEET X	OF X

CALL 48 HOURS BEFORE YOU DIG 1-800-553-4344 "It's the Law" NORTHWEST UTILITIES NOTIFICATION CENTER

STEVEN M. EDRICK STATE OF WASHINGTON 29035 REGISTERED PROFESSIONAL ENGINEER EXPIRES: MAY 26, 2005

DESIGN & ENGINEERING DIVISION
DESIGN SECTION

NE 179TH STREET (I-5 TO NE 50TH AVE)
PLAN & PROFILE STA 88+00 TO STA 93+00

proud past, promising future
CLARK COUNTY WASHINGTON

N:\CIP\PROJECTS\381122-NE179th-East\DESIGN\Dwg\179thEPP14.dwg, 12/18/2003 1:22:11 PM, kerlinr

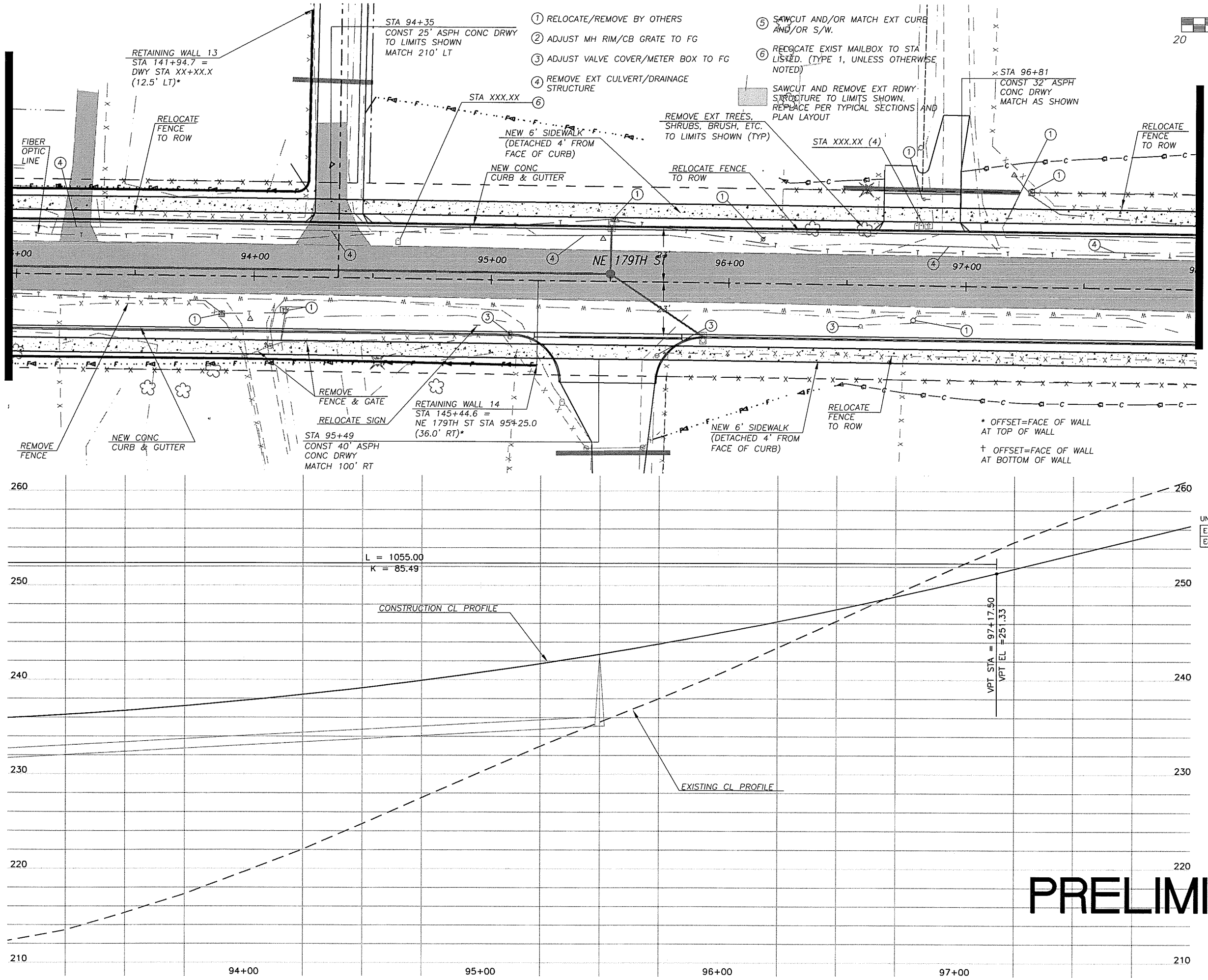

UNADJUSTED EARTHWORK QUANTITIES

EXCAVATION	X C.Y.
EMBANKMENT	X C.Y.

PRELIMINARY

DESIGNED MME
DRAWN RK
CRP 381122
HOR. 20
VERT. 5
DATE 12/22/03
DWG: PP15
SHEET X OF X

CALL 48 HOURS BEFORE YOU DIG 1-800-553-4344 "It's the Law" NORTHWEST UTILITIES NOTIFICATION CENTER

STATE OF WASHINGTON STEVEN L. MORRICK 29030 REGISTERED PROFESSIONAL ENGINEER EXPIRES: MAY 26, 2005

DESIGN & ENGINEERING DIVISION
DESIGN SECTION

NE 179TH STREET (I-5 TO NE 50TH AVE)
PLAN & PROFILE STA 93+00 TO STA 98+00

proud past, promising future
CLARK COUNTY WASHINGTON

N:\CIP\PROJECTS\381122-NE179th-East\DESIGN\Dwg\179thEPP15.dwg, 12/13/2003 3:47:31 PM, kerlinr

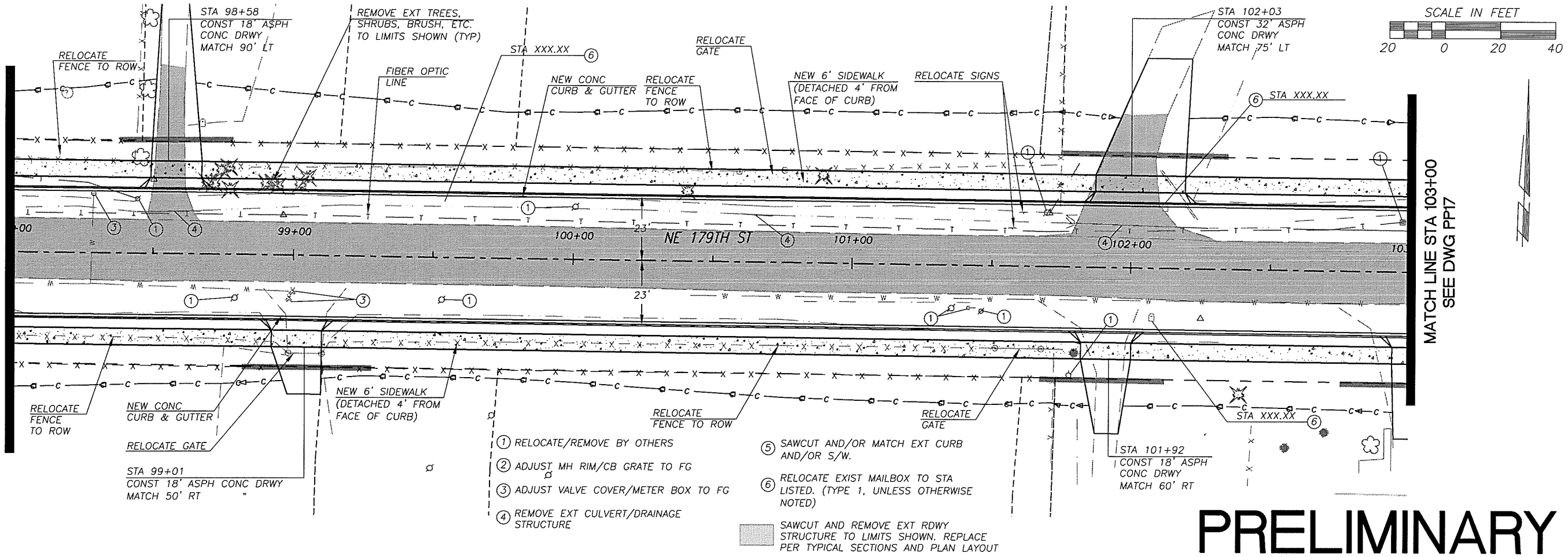

PRELIMINARY

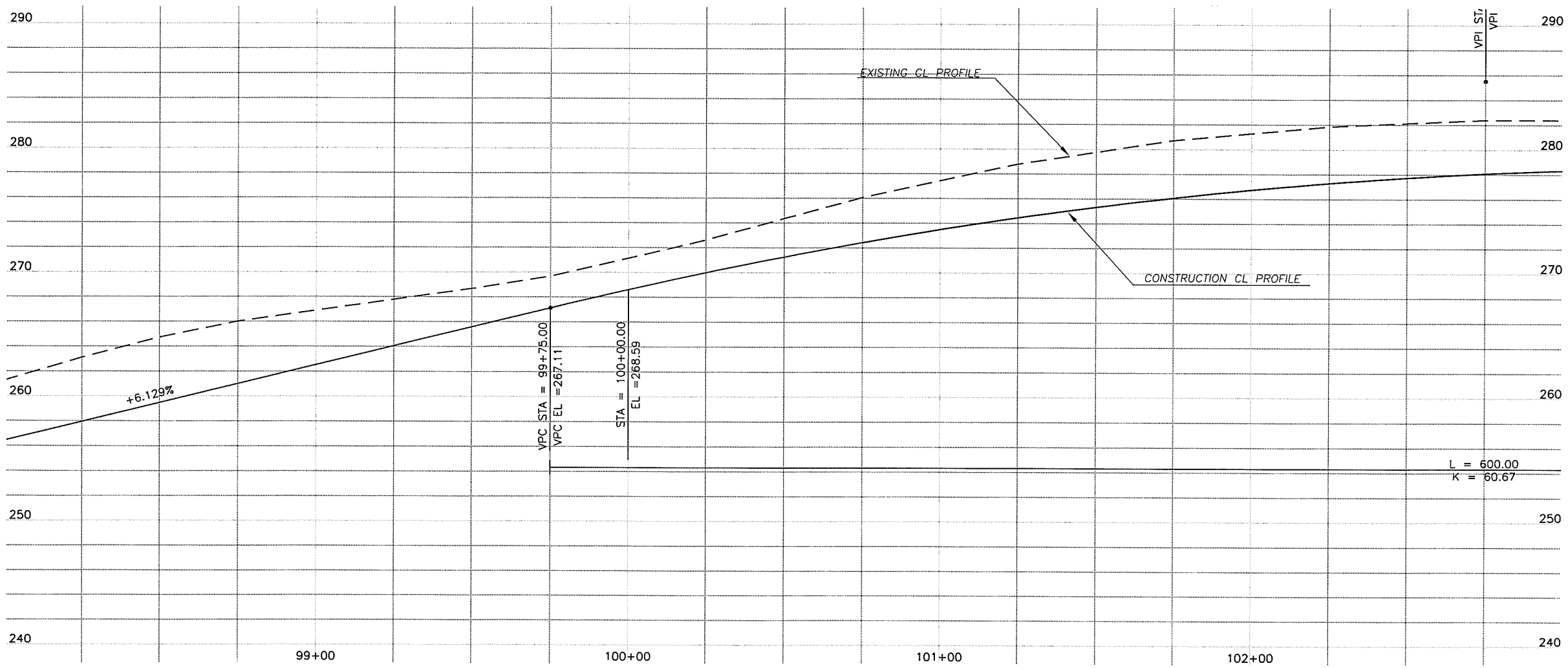

UNADJUSTED EARTHWORK QUANTITIES

EXCAVATION	X	C.Y.
EMBANKMENT	X	C.Y.

DESIGNED	MME
DRAWN	RK
CRP	381122
HOR.	20
VERT.	5
DATE	12/22/03
DWG:	PP16
SHEET X	OF X

CALL 48 HOURS BEFORE YOU DIG
1-800-553-4344
"It's the Law"
NORTHWEST UTILITIES NOTIFICATION CENTER

MICHAEL R. LAMBRICK
STATE OF WASHINGTON
29030
REGISTERED PROFESSIONAL ENGINEER
EXPIRES: MAY 26, 2005

DESIGN & ENGINEERING DIVISION
DESIGN SECTION

NE 179TH STREET (I-5 TO NE 50TH AVE)
PLAN & PROFILE STA 98+00 TO STA 103+00

proud past, promising future
CLARK COUNTY
WASHINGTON

N:\CI\PROJECTS\381122-NE179th-East\DESIGN\Dwg\179thEPP16.dwg, 12/13/2003 4:00:13 PM, kerlinr

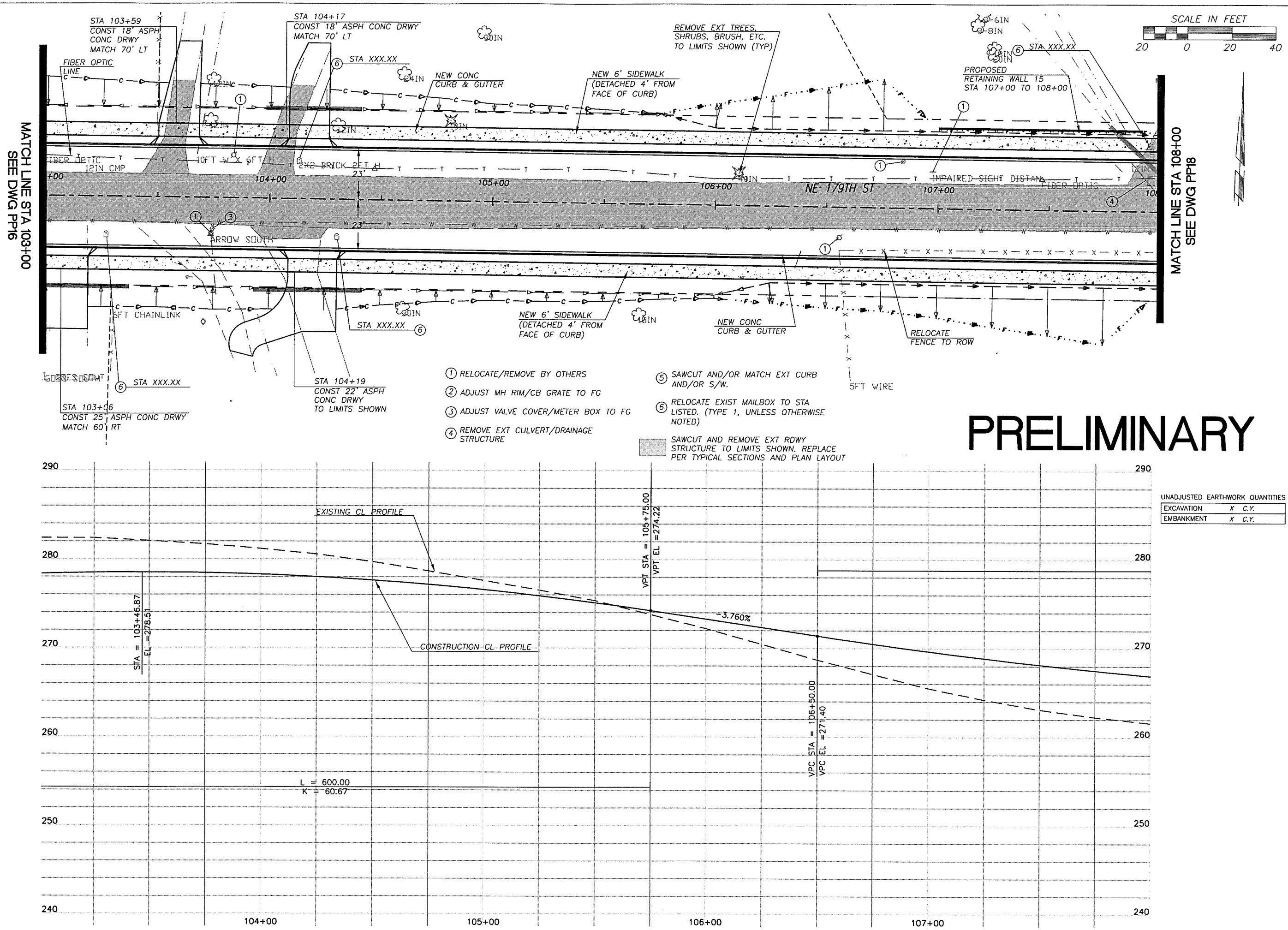

UNADJUSTED EARTHWORK QUANTITIES

EXCAVATION	X	C.Y.
EMBANKMENT	X	C.Y.

DESIGNED	MME
DRAWN	RK
CRP	381122
HOR.	20
VERT.	5
DATE	12/22/03
DWG:	PP17
SHEET X	OF X

CALL 48 HOURS BEFORE YOU DIG
1-800-553-4344
"It's the Law"
NORTHWEST UTILITIES NOTIFICATION CENTER

RICHARD M. GERLICK
STATE OF WASHINGTON
29030
PROFESSIONAL ENGINEER
EXPIRES: MAY 26, 2005

DESIGN & ENGINEERING DIVISION
DESIGN SECTION

NE 179TH STREET (I-5 TO NE 50TH AVE)
PLAN & PROFILE STA 103+00 TO STA 108+00

proud past, promising future
CLARK COUNTY
WASHINGTON

N:\CIP\PROJECTS\381122-NE179th-East\DESIGN\Dwg\179thEPP17.dwg, 12/16/2003 8:10:53 AM, kerlintr

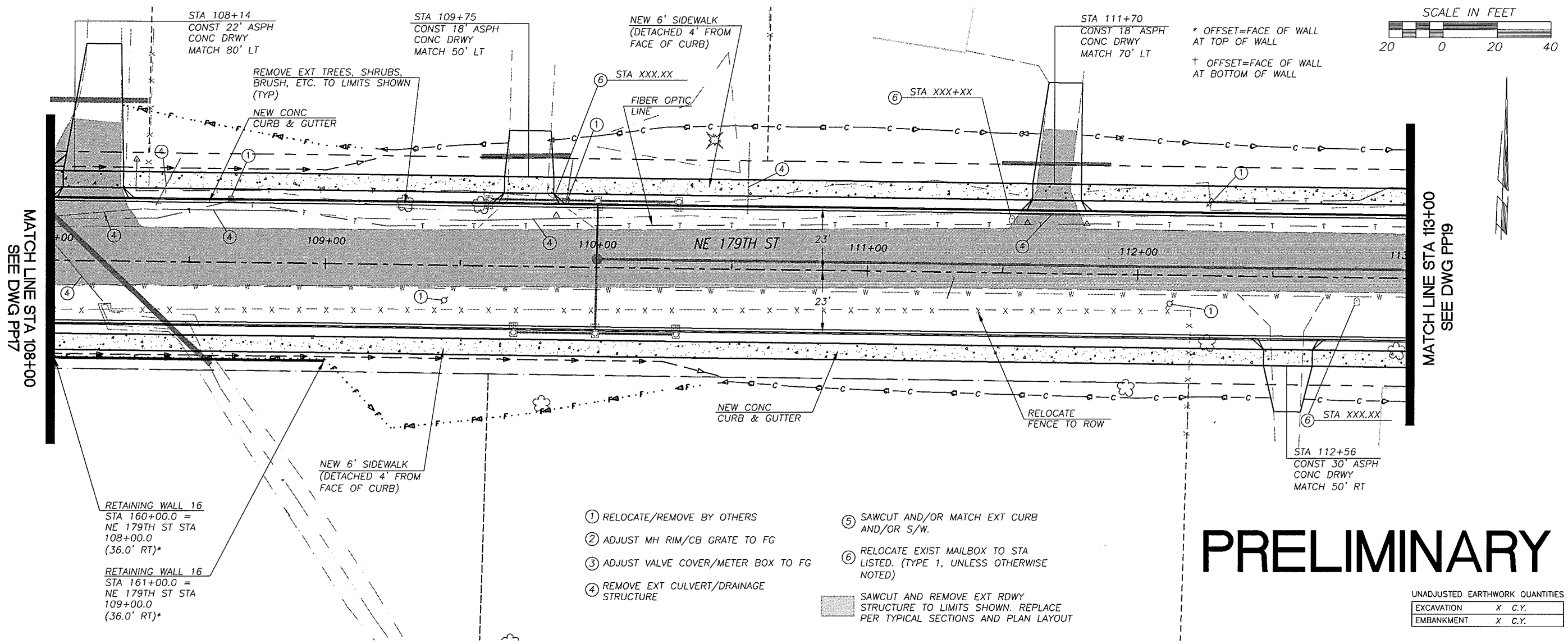

1. RELOCATE/REMOVE BY OTHERS
2. ADJUST MH RIM/CB GRATE TO FG
3. ADJUST VALVE COVER/METER BOX TO FG
4. REMOVE EXT CULVERT/DRAINAGE STRUCTURE
5. SAWCUT AND/OR MATCH EXT CURB AND/OR S/W.
6. RELOCATE EXIST MAILBOX TO STA LISTED. (TYPE 1, UNLESS OTHERWISE NOTED)

SAWCUT AND REMOVE EXT RDWY STRUCTURE TO LIMITS SHOWN. REPLACE PER TYPICAL SECTIONS AND PLAN LAYOUT

PRELIMINARY

UNADJUSTED EARTHWORK QUANTITIES

EXCAVATION	X	C.Y.
EMBANKMENT	X	C.Y.

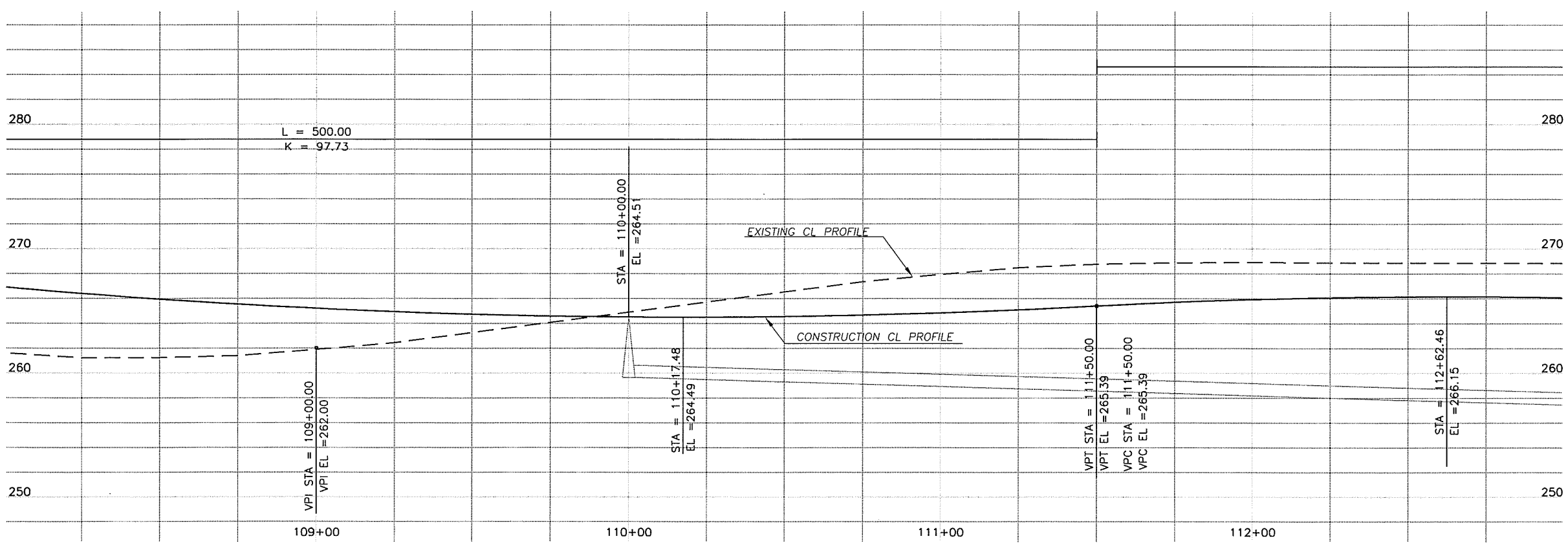

DESIGNED MME
DRAWN RK
CRP 381122
HOR. 20
VERT. 5
DATE 12/22/03
DWG: PP18
SHEET X OF X

CALL 48 HOURS BEFORE YOU DIG
1-800-553-4344
"It's the Law"
NORTHWEST UTILITIES NOTIFICATION CENTER

RAEL M. EARICK
STATE OF WASHINGTON
20030
REGISTERED PROFESSIONAL ENGINEER
EXPIRES MAY 28, 2005

DESIGN & ENGINEERING DIVISION
DESIGN SECTION

NE 179TH STREET (I-5 TO NE 50TH AVE)
PLAN & PROFILE STA 108+00 TO STA 113+00

CLARK COUNTY
WASHINGTON
proud past, promising future

N:\CIP\PROJECTS\381122-NE179th-East\DESIGN\Dwg\179thEPP18.dwg, 12/16/2003 10:07:50 AM, kerlinr

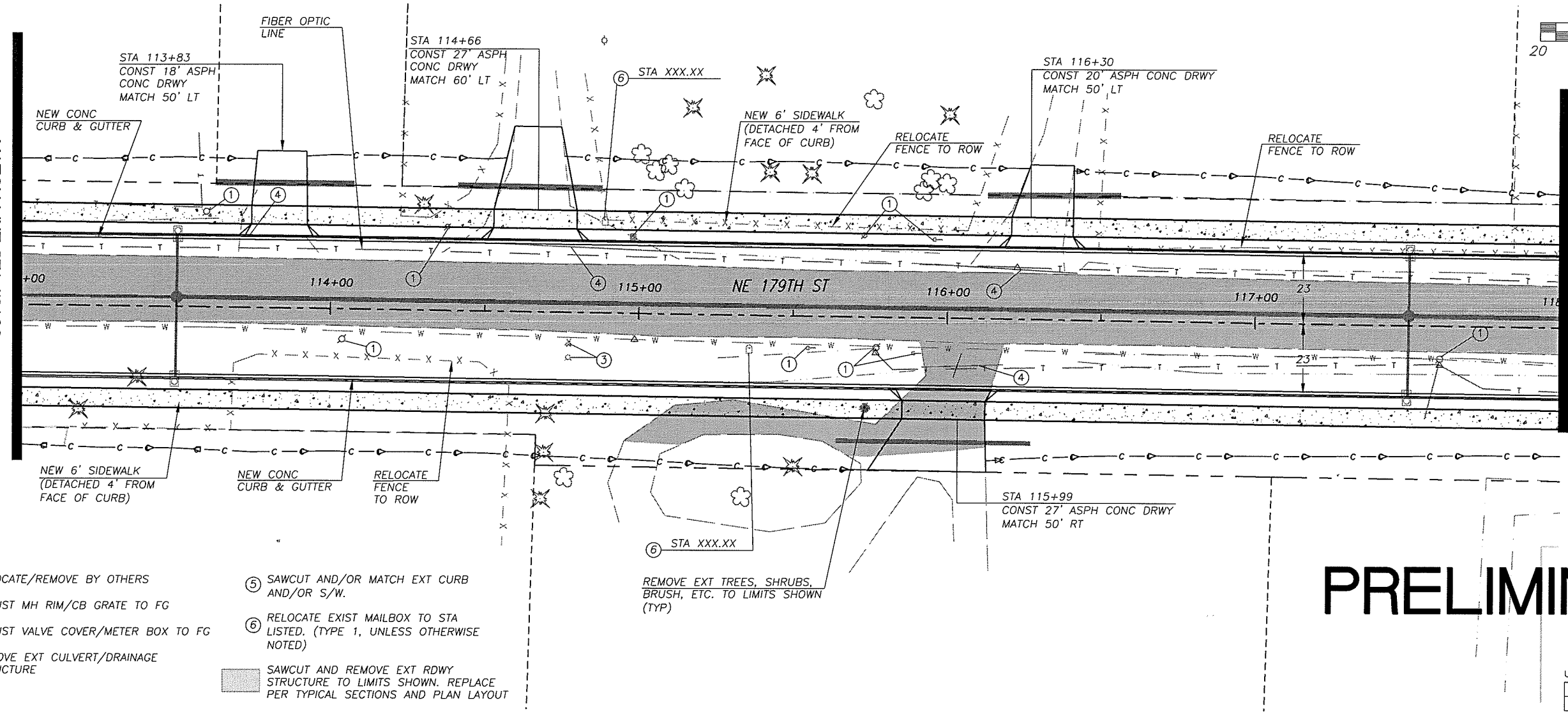

PRELIMINARY

1. RELOCATE/REMOVE BY OTHERS
2. ADJUST MH RIM/CB GRATE TO FG
3. ADJUST VALVE COVER/METER BOX TO FG
4. REMOVE EXT CULVERT/DRAINAGE STRUCTURE
5. SAWCUT AND/OR MATCH EXT CURB AND/OR S/W.
6. RELOCATE EXIST MAILBOX TO STA LISTED. (TYPE 1, UNLESS OTHERWISE NOTED)

SAWCUT AND REMOVE EXT RDWY STRUCTURE TO LIMITS SHOWN. REPLACE PER TYPICAL SECTIONS AND PLAN LAYOUT

UNADJUSTED EARTHWORK QUANTITIES

EXCAVATION	X C.Y.
EMBANKMENT	X C.Y.

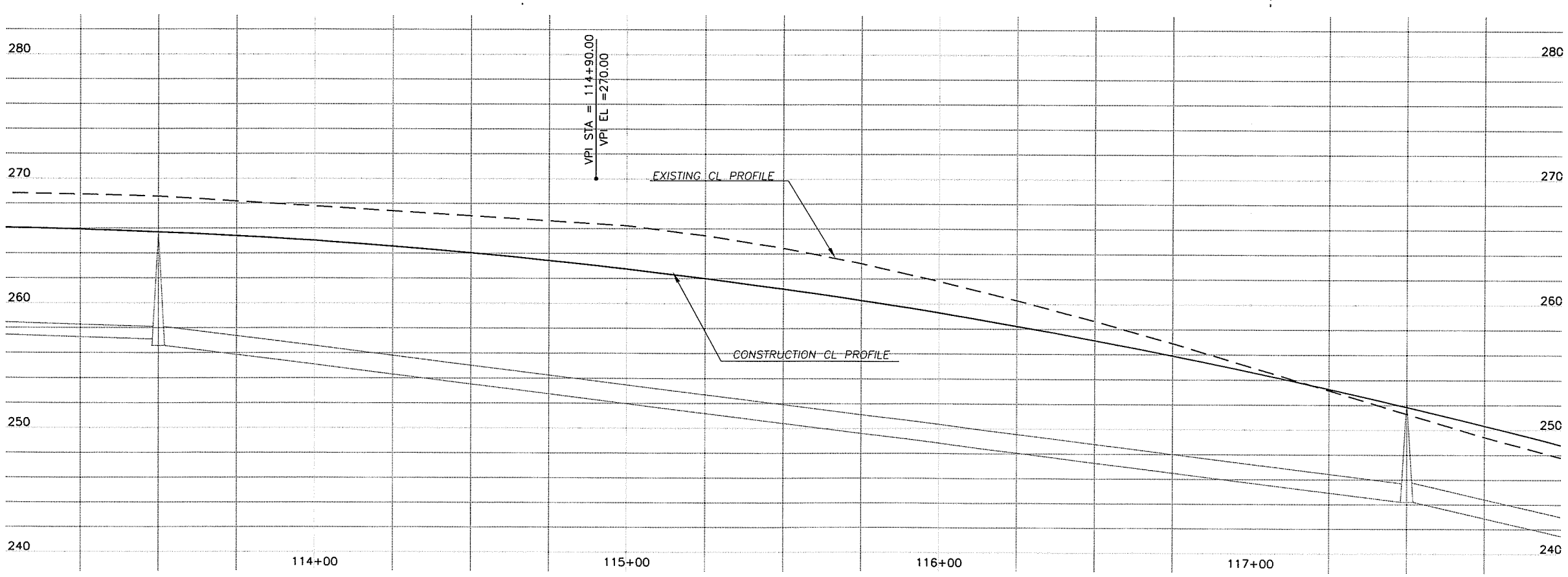

DESIGNED	MME
DRAWN	RK
CRP	381122
HOR.	20
VERT.	5
DATE	12/22/03
DWG:	PP19
SHEET X	OF X

CALL 48 HOURS BEFORE YOU DIG
1-800-553-4344
"It's the Law"
NORTHWEST UTILITIES NOTIFICATION CENTER

MICHAEL M. BARLICK
STATE OF WASHINGTON
29030
REGISTERED PROFESSIONAL ENGINEER
EXPIRES MAY 26, 2005

DESIGN & ENGINEERING DIVISION
DESIGN SECTION

NE 179TH STREET (I-5 TO NE 50TH AVE)
PLAN & PROFILE STA 113+00 TO STA 118+00

proud past, promising future
CLARK COUNTY
WASHINGTON

N:\CIP\PROJECTS\381122-NE179th-East\DESIGN\Dwg\179thEPP19.dwg, 12/16/2003 10:10:06 AM, kerlinr

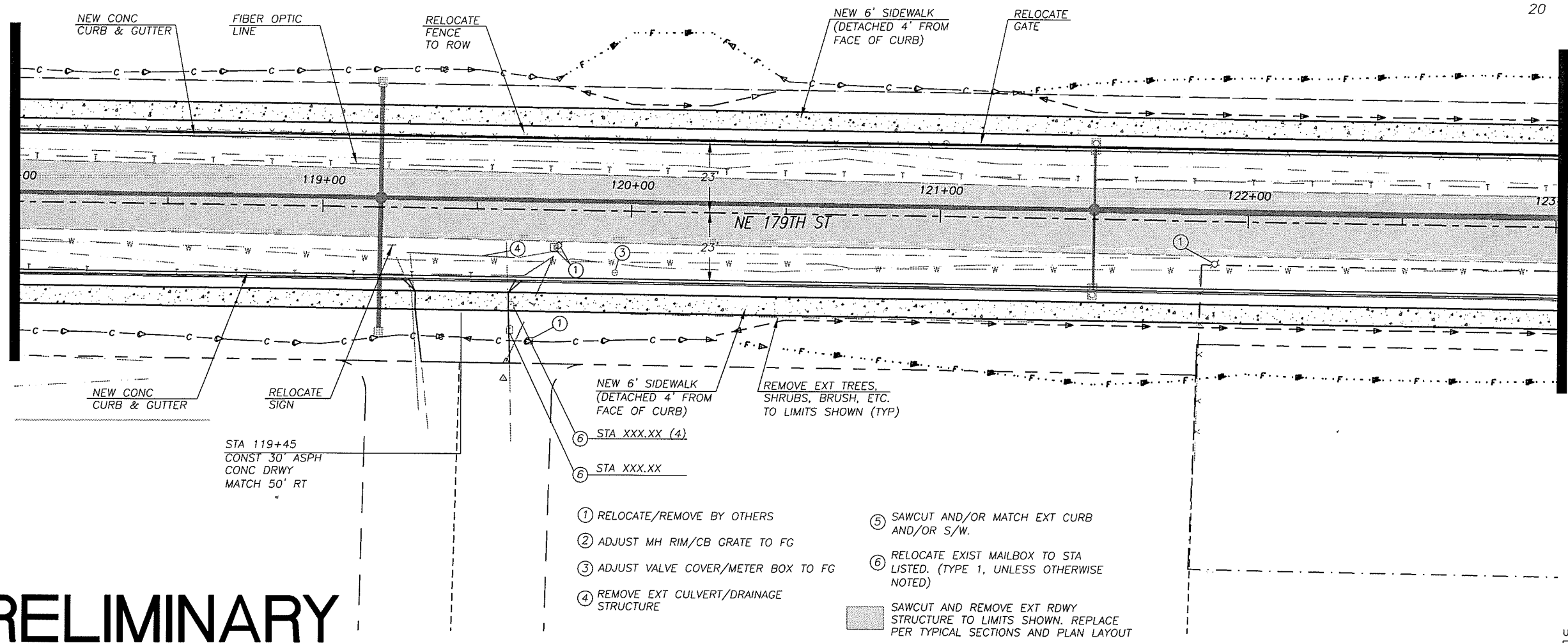

PRELIMINARY

1. RELOCATE/REMOVE BY OTHERS
2. ADJUST MH RIM/CB GRATE TO FG
3. ADJUST VALVE COVER/METER BOX TO FG
4. REMOVE EXT CULVERT/DRAINAGE STRUCTURE
5. SAWCUT AND/OR MATCH EXT CURB AND/OR S/W.
6. RELOCATE EXIST MAILBOX TO STA LISTED. (TYPE 1, UNLESS OTHERWISE NOTED)

SAWCUT AND REMOVE EXT RDWY STRUCTURE TO LIMITS SHOWN. REPLACE PER TYPICAL SECTIONS AND PLAN LAYOUT

UNADJUSTED EARTHWORK QUANTITIES

EXCAVATION	X	C.Y.
EMBANKMENT	X	C.Y.

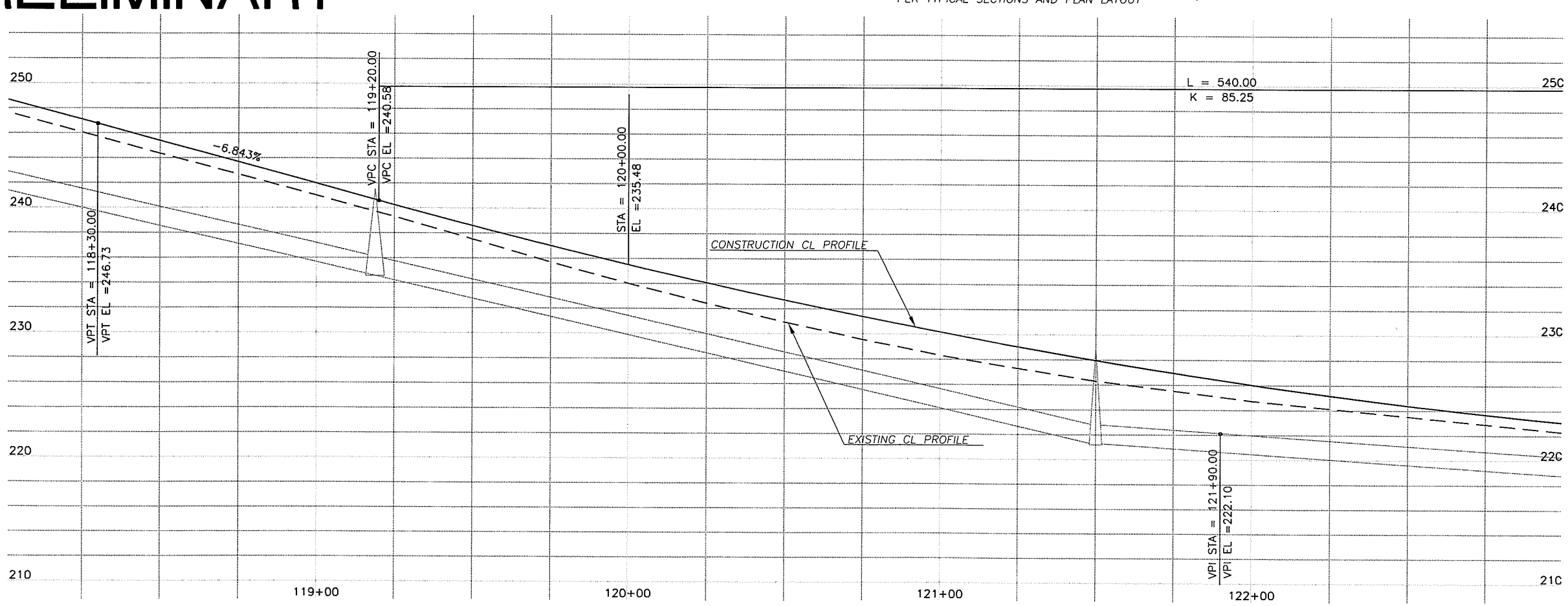

DESIGNED	MME
DRAWN	RK
CRP	381122
HOR.	20
VERT.	5
DATE	12/22/03
DWG:	PP20
SHEET X	OF X

CALL 48 HOURS BEFORE YOU DIG 1-800-553-4344 "It's the Law" NORTHWEST UTILITIES NOTIFICATION CENTER

MICHAEL M. EDRICK STATE OF WASHINGTON 29030 REGISTERED PROFESSIONAL ENGINEER EXPIRES: MAY 26, 2005

DESIGN & ENGINEERING DIVISION
DESIGN SECTION

NE 179TH STREET (I-5 TO NE 50TH AVE)
PLAN & PROFILE STA 118+00 TO STA 123+00

proud past, promising future
CLARK COUNTY WASHINGTON

N:\CIP\PROJECTS\381122-NE179th-East\DESIGN\Dwg\179thEPP20.dwg, 12/18/2003 1:24:45 PM, kerlinr

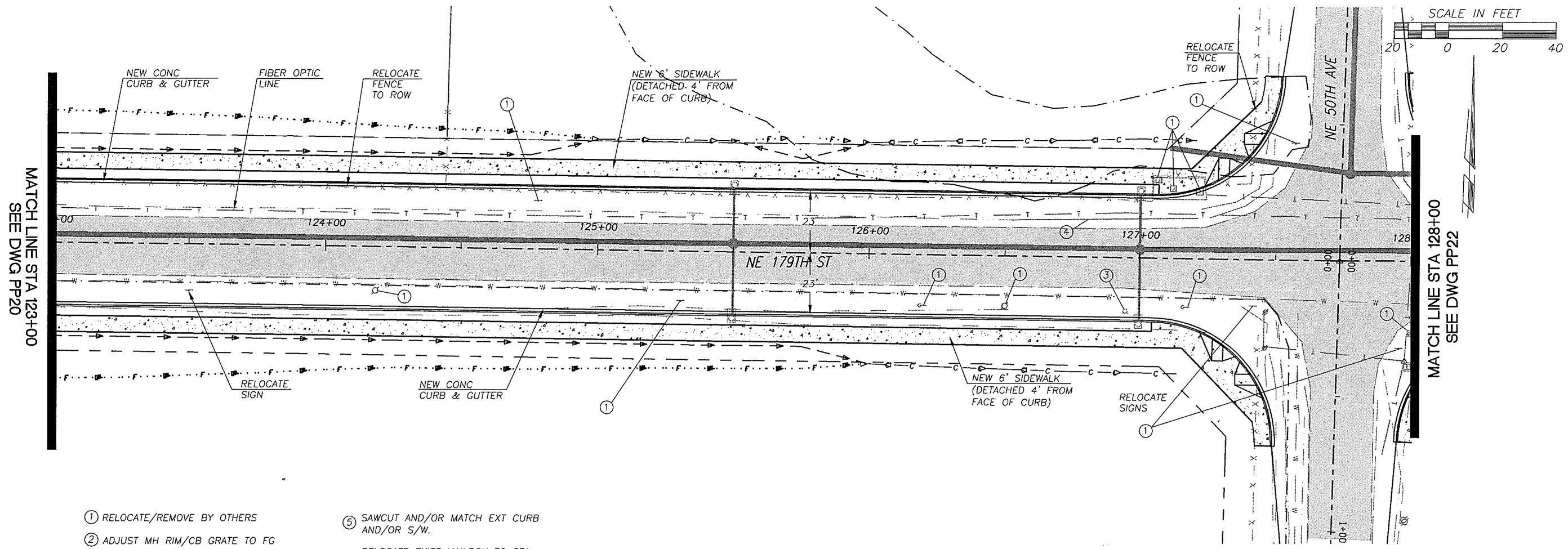

1. RELOCATE/REMOVE BY OTHERS
2. ADJUST MH RIM/CB GRATE TO FG
3. ADJUST VALVE COVER/METER BOX TO FG
4. REMOVE EXT CULVERT/DRAINAGE STRUCTURE
5. SAWCUT AND/OR MATCH EXT CURB AND/OR S/W.
6. RELOCATE EXIST MAILBOX TO STA LISTED. (TYPE 1, UNLESS OTHERWISE NOTED)

SAWCUT AND REMOVE EXT RDWY STRUCTURE TO LIMITS SHOWN. REPLACE PER TYPICAL SECTIONS AND PLAN LAYOUT

PRELIMINARY

UNADJUSTED EARTHWORK QUANTITIES

EXCAVATION	X C.Y.
EMBANKMENT	X C.Y.

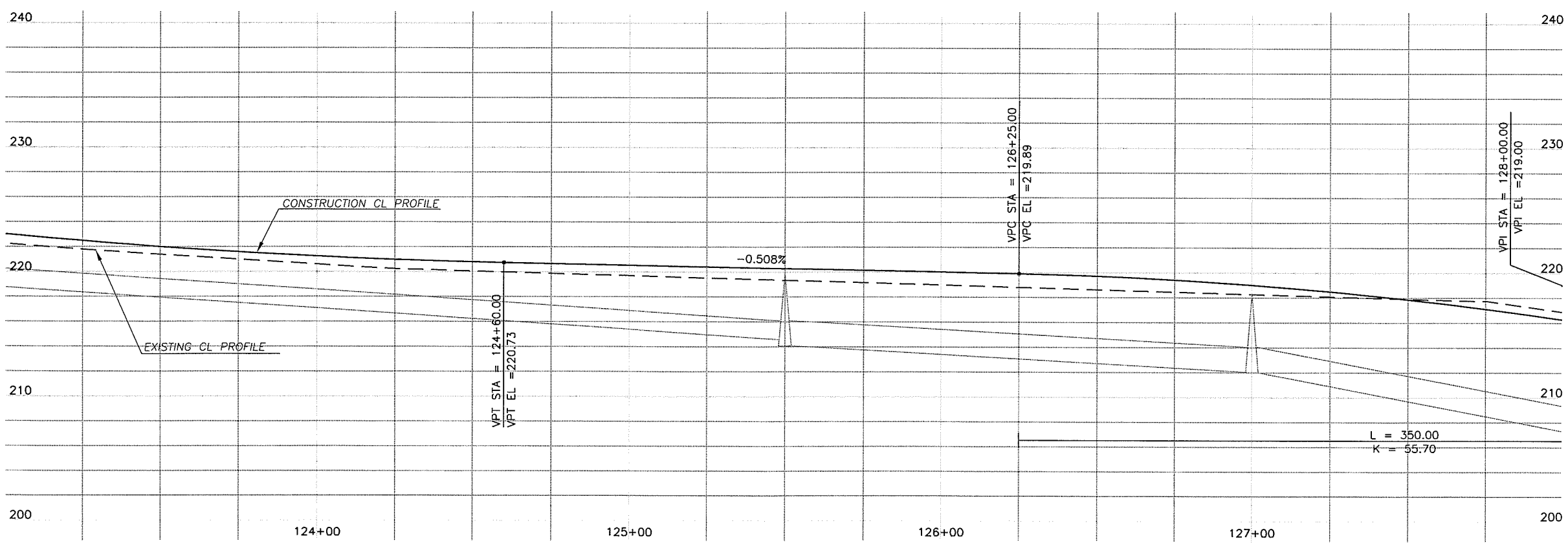

DESIGNED MME
DRAWN RK
CRP 381122
HOR. 20
VERT. 5
DATE 12/22/03
DWG: PP21
SHEET X OF X

CALL 48 HOURS BEFORE YOU DIG 1-800-553-4344 "It's the Law" NORTHWEST UTILITIES NOTIFICATION CENTER

MICHAEL M. EADDICK STATE OF WASHINGTON 29035 REGISTERED PROFESSIONAL ENGINEER
EXPIRES: MAY 26, 2005

DESIGN & ENGINEERING DIVISION
DESIGN SECTION

NE 179TH STREET (I-5 TO NE 50TH AVE)
PLAN & PROFILE STA 123+00 TO STA 128+00

proud past, promising future
CLARK COUNTY WASHINGTON

N:\CIP\PROJECTS\381122-NE179th-East\DESIGN\Dwg\179thEPP21.dwg, 12/18/2003 1:25:30 PM, kerlinr

PRELIMINARY

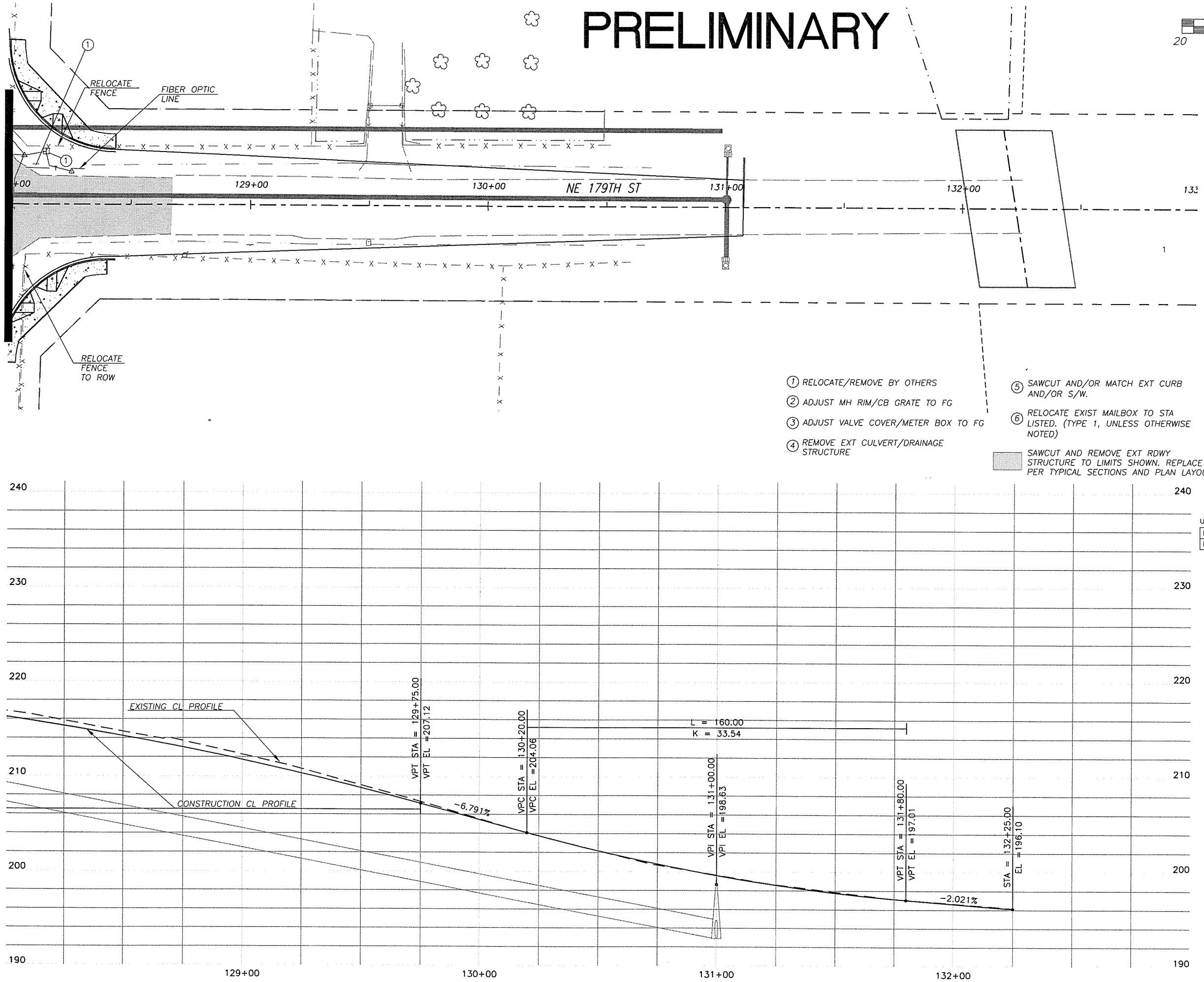

UNADJUSTED EARTHWORK QUANTITIES

EXCAVATION	X	C.Y.
EMBANKMENT	X	C.Y.

DESIGNED	MME
DRAWN	RK
CRP	381122
HOR.	20
VERT.	5
DATE	12/22/03
DWG:	PP22
SHEET X	OF X

CALL 48 HOURS BEFORE YOU DIG
1-800-553-4344
"It's the Law"
NORTHWEST UTILITIES NOTIFICATION CENTER

STATE OF WASHINGTON
RAFAEL M. EARLICK
20030
REGISTERED PROFESSIONAL ENGINEER
EXPIRES: MAY 26, 2005

DESIGN & ENGINEERING DIVISION
DESIGN SECTION

NE 179TH STREET (I-5 TO NE 50TH AVE)
PLAN & PROFILE STA 128+00 TO EOP

proud past, promising future
CLARK COUNTY
WASHINGTON

N:\CIP\PROJECTS\381122-NE179th-East\DESIGN\Dwg\179thEPP22.dwg, 12/18/2003 1:27:23 PM, kerlinr

PRELIMINARY

SCALE IN FEET

20 0 20 40

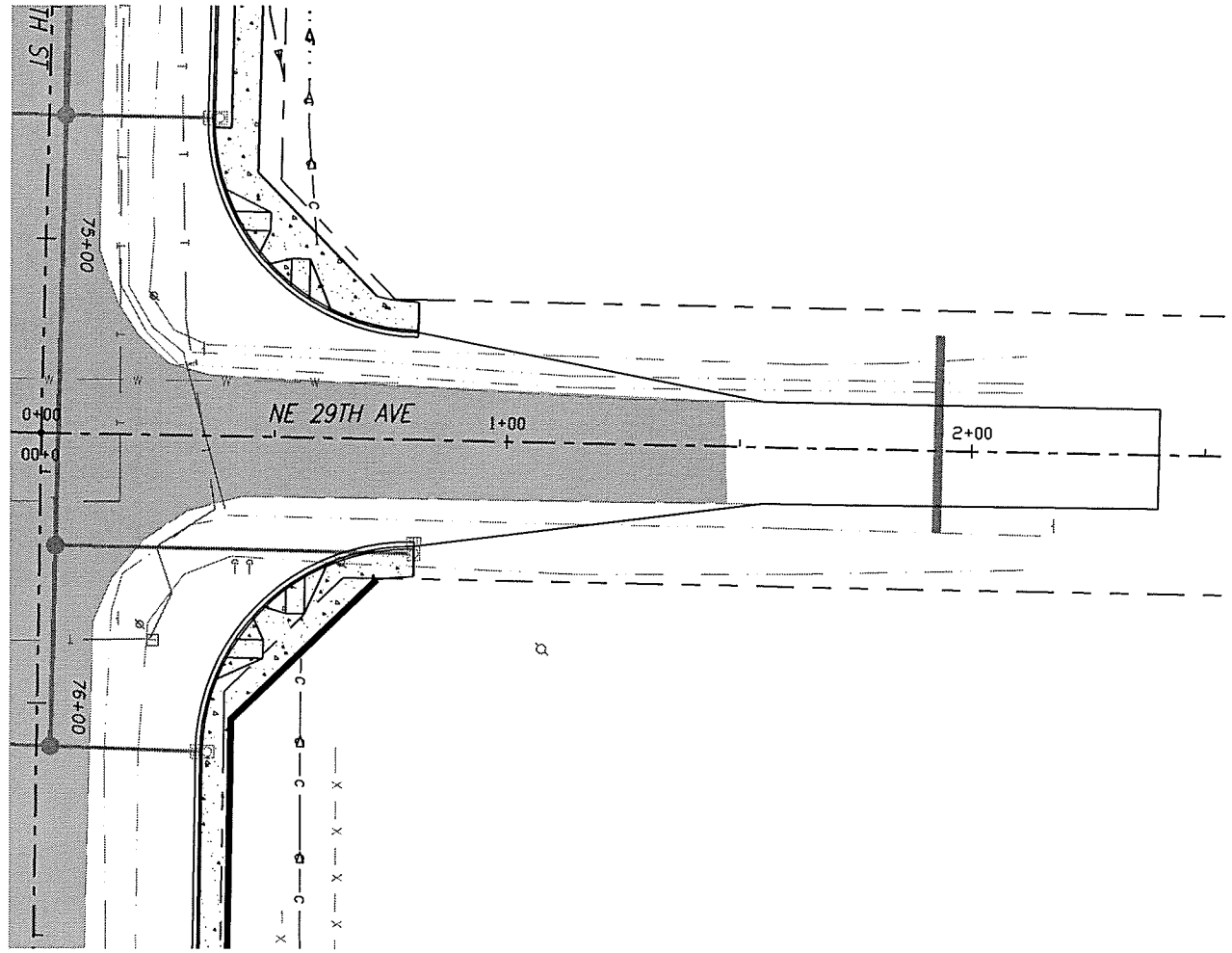

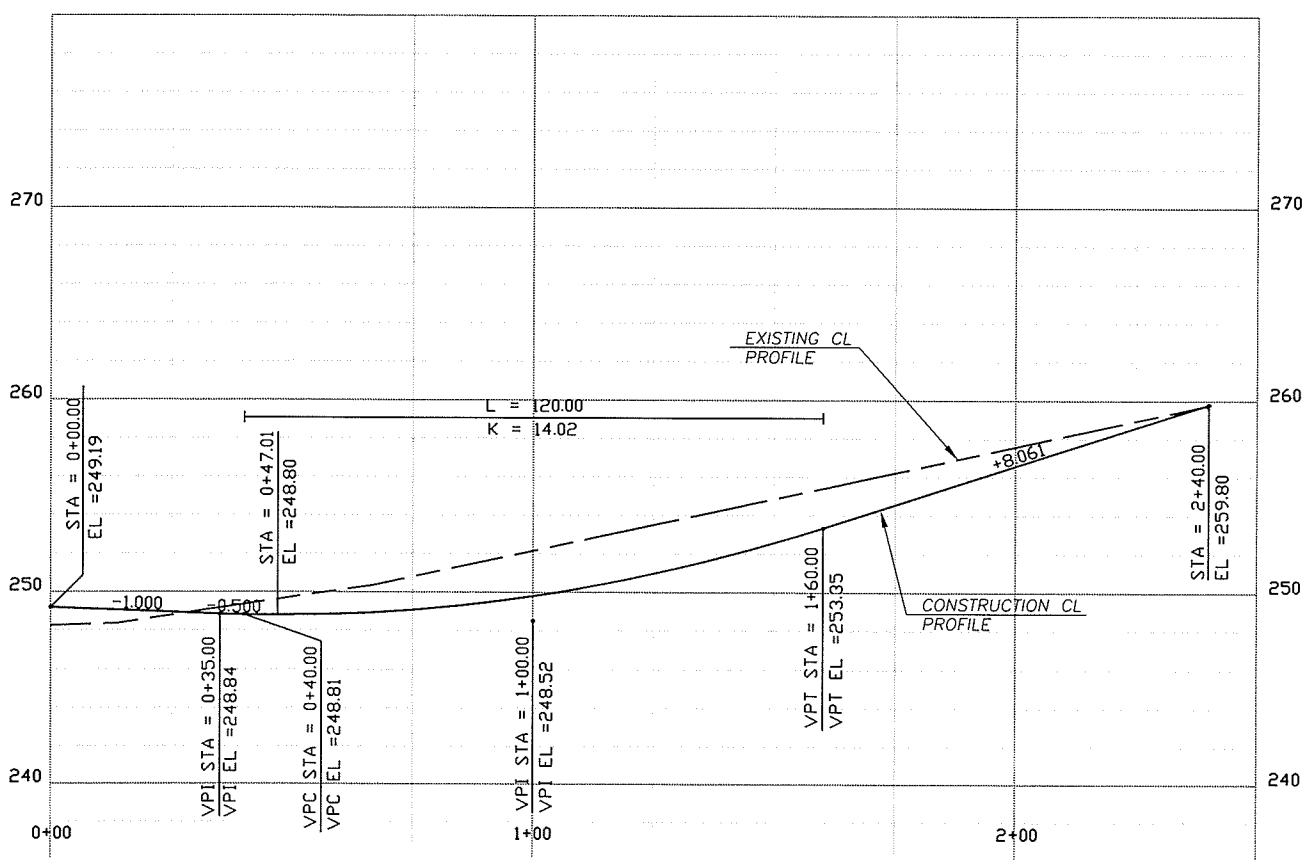

1. RELOCATE/REMOVE BY OTHERS
2. ADJUST MH RIM/CB GRATE TO FG
3. ADJUST VALVE COVER/METER BOX TO FG
4. REMOVE EXT CULVERT/DRAINAGE STRUCTURE
5. SAWCUT AND/OR MATCH EXT CURB AND/OR S/W.
6. RELOCATE EXIST MAILBOX TO STA LISTED. (TYPE 1, UNLESS OTHERWISE NOTED)

SAWCUT AND REMOVE EXT RDWY STRUCTURE TO LIMITS SHOWN. REPLACE PER TYPICAL SECTIONS AND PLAN LAYOUT

UNADJUSTED EARTHWORK QUANTITIES

EXCAVATION	X	C.Y.
EMBANKMENT	X	C.Y.

DESIGNED	MME
DRAWN	RK
CRP	381122
HOR.	20
VERT.	5
DATE	12/22/03
DWG:	PP23
SHEET X	OF X

CALL 48 HOURS BEFORE YOU DIG
1-800-553-4344
"It's the Law"
NORTHWEST UTILITIES NOTIFICATION CENTER

MICHAEL M. EDRICA
STATE OF WASHINGTON
20030
REGISTERED PROFESSIONAL ENGINEER
EXPIRES: MAY 28, 2005

DESIGN & ENGINEERING DIVISION
DESIGN SECTION

NE 179TH STREET (I-5 TO NE 50TH AVE)
PLAN & PROFILE (NE 29TH AVE - NORTH)

proud past, promising future
CLARK COUNTY
WASHINGTON

N:\CIP\PROJECTS\381122-NE179th-East\DESIGN\Dwg\179thEPP23.DWG, 12/16/2003 10:18:34 AM, kerlinr

PRELIMINARY

SCALE IN FEET
20 0 20 40

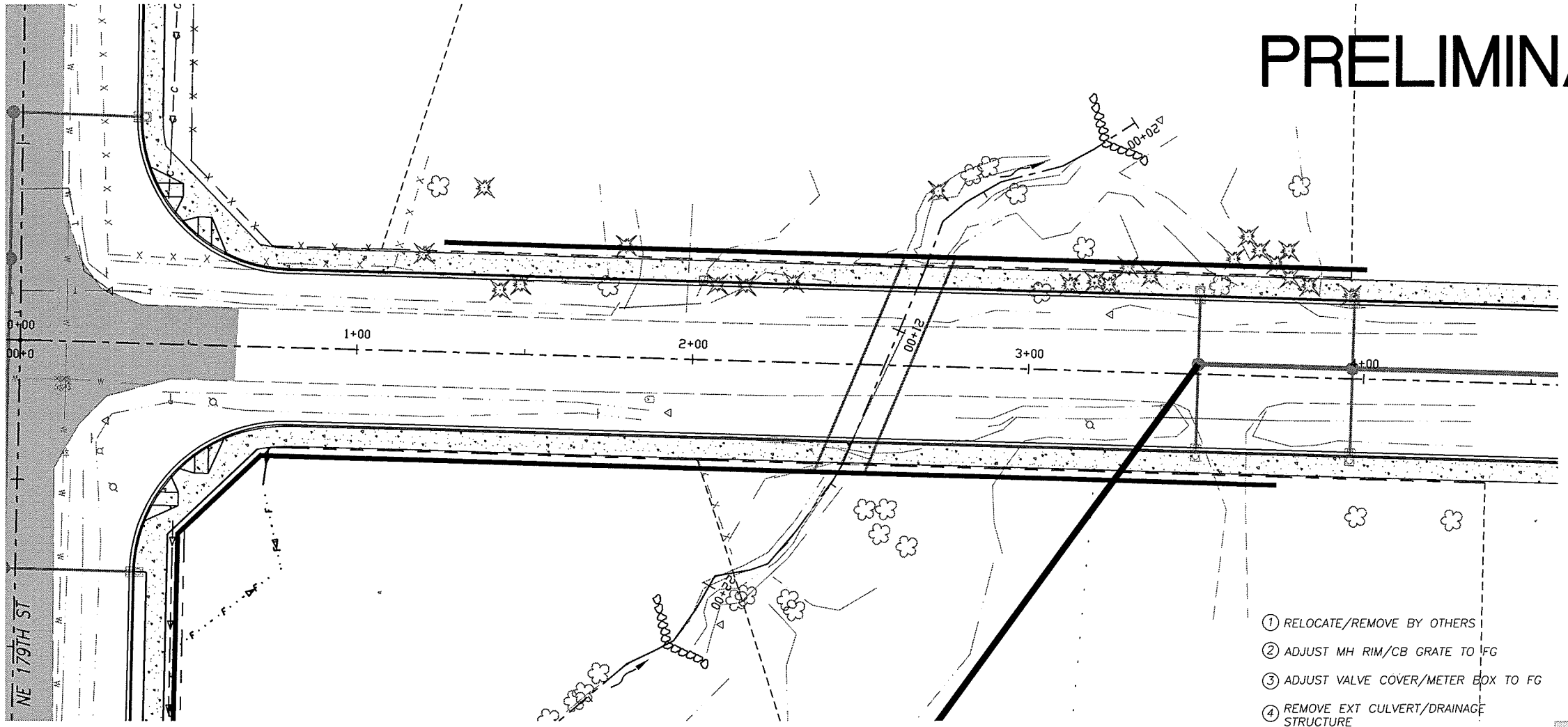

1. RELOCATE/REMOVE BY OTHERS
2. ADJUST MH RIM/CB GRATE TO FG
3. ADJUST VALVE COVER/METER BOX TO FG
4. REMOVE EXT CULVERT/DRAINAGE STRUCTURE
5. SAWCUT AND/OR MATCH EXT CURB AND/OR S/W.
6. RELOCATE EXIST MAILBOX TO STA LISTED. (TYPE 1, UNLESS OTHERWISE NOTED)

SAWCUT AND REMOVE EXT RDWY STRUCTURE TO LIMITS SHOWN. REPLACE PER TYPICAL SECTIONS AND PLAN LAYOUT

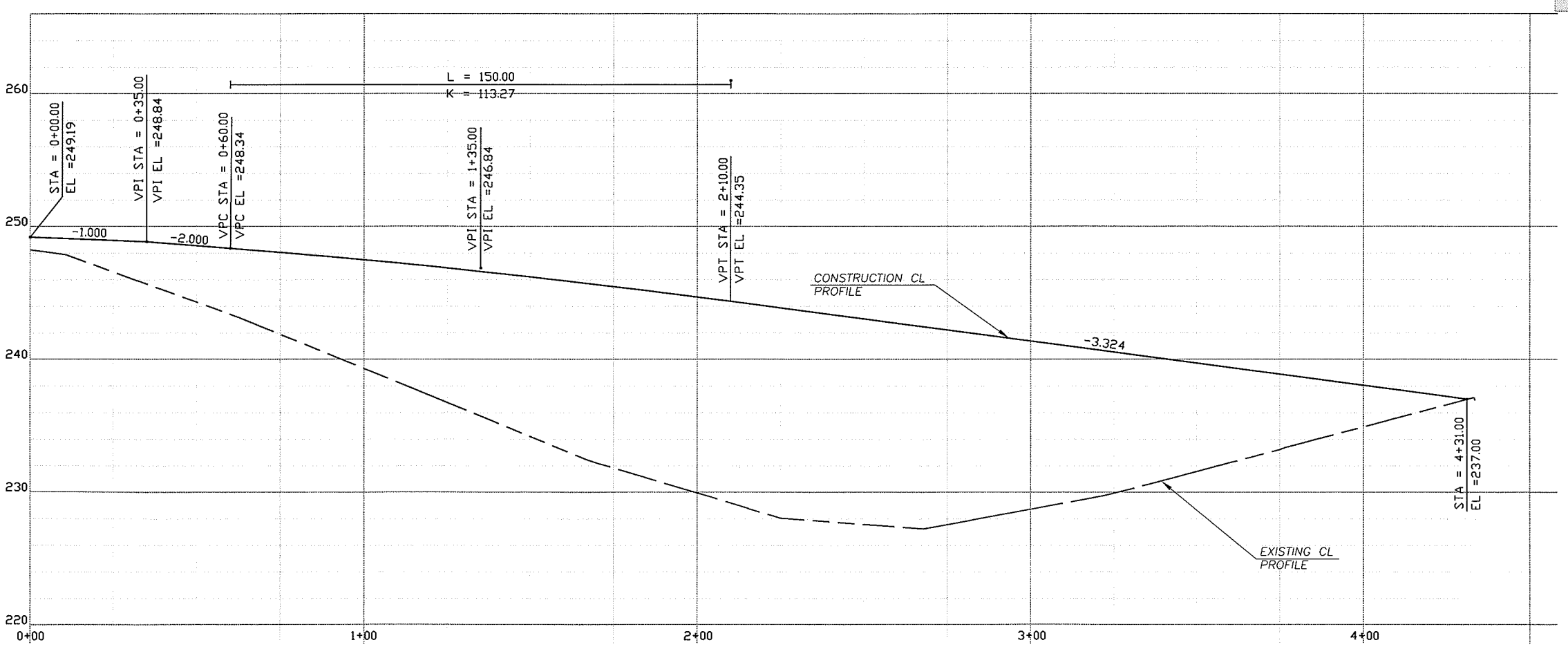

UNADJUSTED EARTHWORK QUANTITIES

EXCAVATION	X	C.Y.
EMBANKMENT	X	C.Y.

DESIGNED	MME
DRAWN	RK
CRP	381122
HOR.	20
VERT.	5
DATE	12/22/03
DWG:	PP24
SHEET X	OF X

CALL 48 HOURS BEFORE YOU DIG
1-800-553-4344
"It's the Law"
NORTHWEST UTILITIES NOTIFICATION CENTER

MICHAEL M. EMRICK
STATE OF WASHINGTON
29630
REGISTERED PROFESSIONAL ENGINEER
EXPIRES:JULY 20, 2005

DESIGN & ENGINEERING DIVISION
DESIGN SECTION

NE 179TH STREET (I-5 TO NE 50TH AVE)
PLAN & PROFILE (NE 29TH AVE - SOUTH)

proud past, promising future
CLARK COUNTY
WASHINGTON

N:\CIP\PROJECTS\381122-NE179th-East\DESIGN\Dwg\179thEPP24.dwg, 12/16/2003 10:30:16 AM, kerlinr

PRELIMINARY

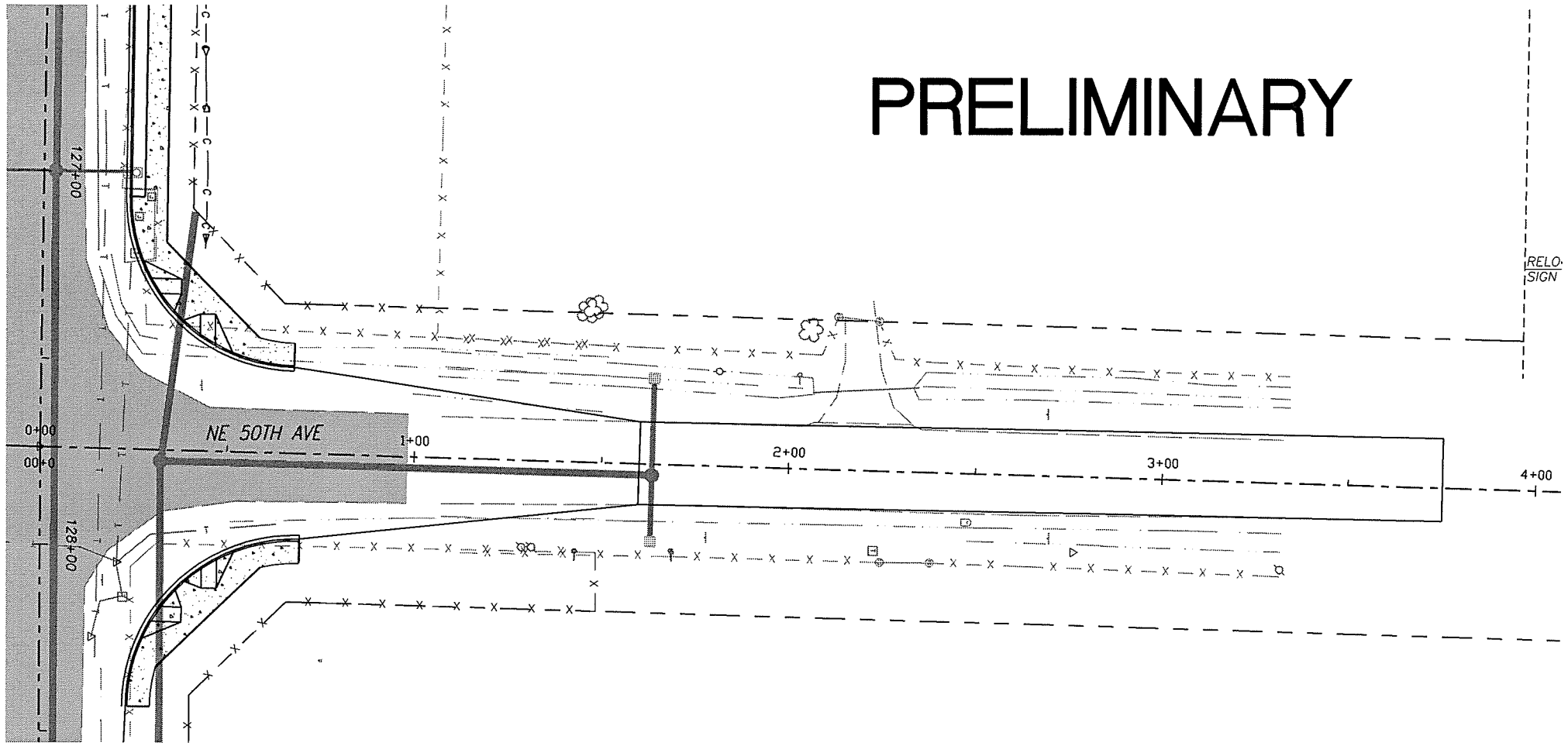

SCALE IN FEET

20 0 20 40

① RELOCATE/REMOVE BY OTHERS

② ADJUST MH RIM/CB GRATE TO FG

③ ADJUST VALVE COVER/METER BOX TO FG

④ REMOVE EXT CULVERT/DRAINAGE STRUCTURE

⑤ SAWCUT AND/OR MATCH EXT CURB AND/OR S/W.

⑥ RELOCATE EXIST MAILBOX TO STA LISTED. (TYPE 1, UNLESS OTHERWISE NOTED)

SAWCUT AND REMOVE EXT RDWY STRUCTURE TO LIMITS SHOWN. REPLACE PER TYPICAL SECTIONS AND PLAN LAYOUT

UNADJUSTED EARTHWORK QUANTITIES

EXCAVATION	X	C.Y.
EMBANKMENT	X	C.Y.

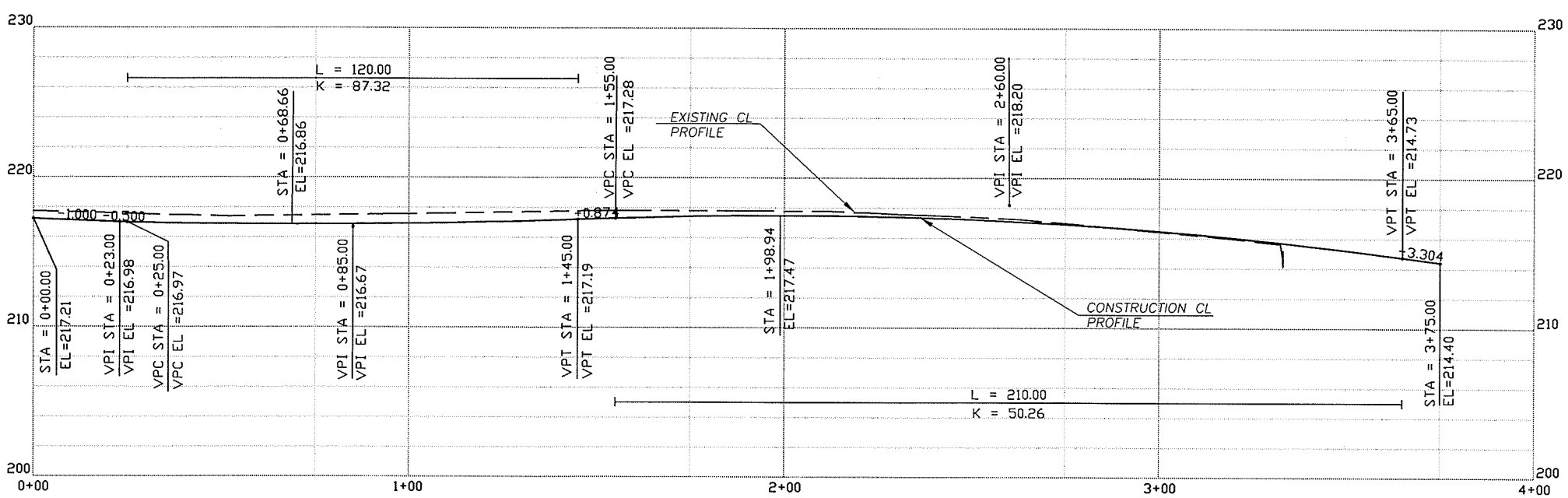

DESIGNED	MME
DRAWN	RK
CRP	381122
HOR.	20
VERT.	5
DATE	12/22/03
DWG:	PP25
SHEET X	OF X

CALL 48 HOURS BEFORE YOU DIG 1-800-553-4344 "It's the Law" NORTHWEST UTILITIES NOTIFICATION CENTER

STATE OF WASHINGTON MICHAEL A. BURDICK 29930 REGISTERED PROFESSIONAL ENGINEER EXPIRES MAY 26, 2005

DESIGN & ENGINEERING DIVISION
DESIGN SECTION

NE 179TH STREET (I-5 TO NE 50TH AVE)
PLAN & PROFILE (NE 50TH AVE - NORTH)

proud past, promising future

CLARK COUNTY WASHINGTON

N:\CIP\PROJECTS\381122-NE179th-East\DESIGN\Dwg\179thEPP25.dwg, 12/16/2003 10:31:26 AM, kerlinr

PRELIMINARY

SCALE IN FEET
20 0 20 40

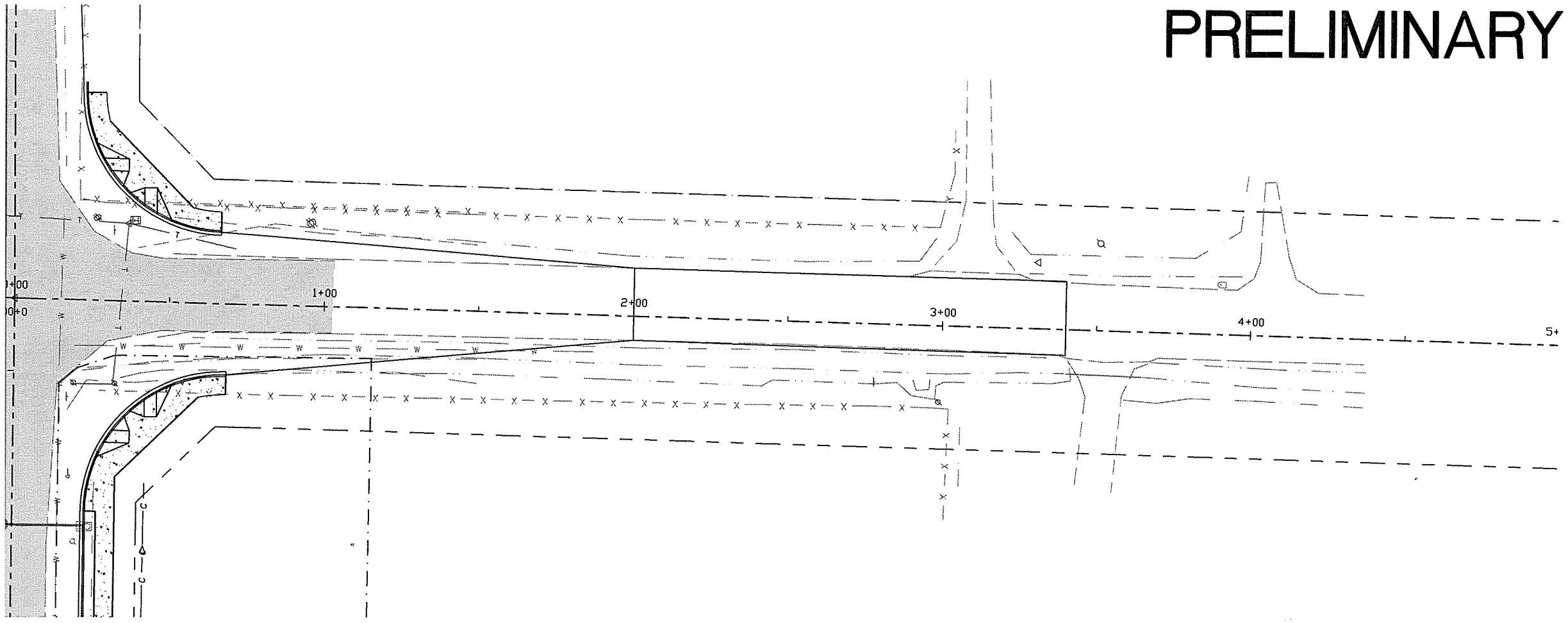

① RELOCATE/REMOVE BY OTHERS

② ADJUST MH RIM/CB GRATE TO FG

③ ADJUST VALVE COVER/METER BOX TO FG

④ REMOVE EXT CULVERT/DRAINAGE STRUCTURE

⑤ SAWCUT AND/OR MATCH EXT CURB AND/OR S/W.

⑥ RELOCATE EXIST MAILBOX TO STA LISTED. (TYPE 1, UNLESS OTHERWISE NOTED)

SAWCUT AND REMOVE EXT RDWY STRUCTURE TO LIMITS SHOWN. REPLACE PER TYPICAL SECTIONS AND PLAN LAYOUT

UNADJUSTED EARTHWORK QUANTITIES

EXCAVATION	X	C.Y.
EMBANKMENT	X	C.Y.

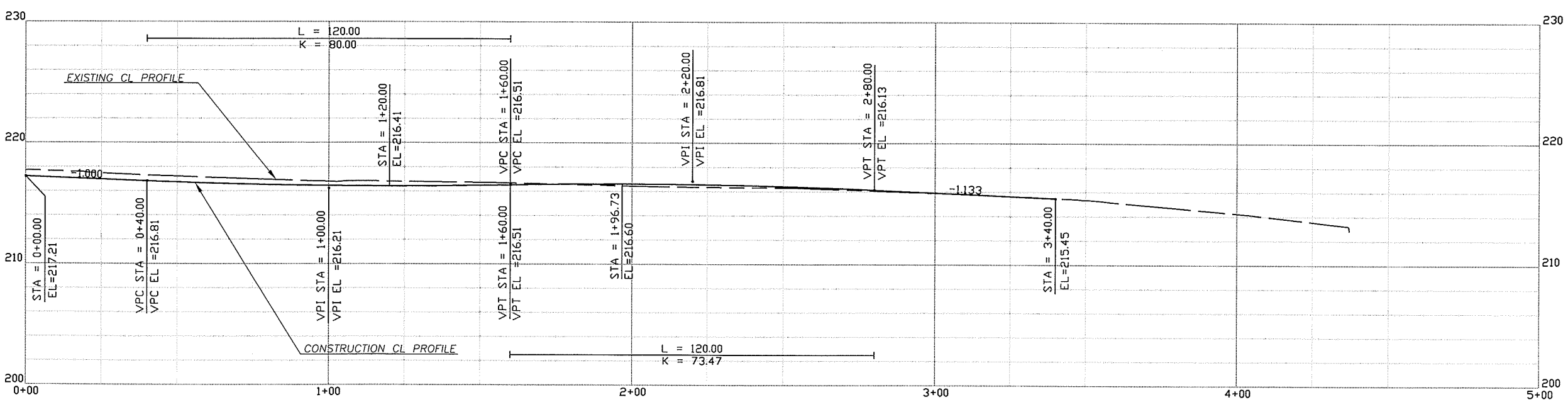

DESIGNED MME
DRAWN RK
CRP 381122
HOR. 20
VERT. 5
DATE 12/22/03
DWG: PP26
SHEET X OF X

CALL 48 HOURS BEFORE YOU DIG
1-800-553-4344
"It's the Law"
NORTHWEST UTILITIES NOTIFICATION CENTER

RAFEL M. ERDICK
STATE OF WASHINGTON
29030
REGISTERED PROFESSIONAL ENGINEER
EXPIRES: MAY 26, 2005

DESIGN & ENGINEERING DIVISION
DESIGN SECTION

NE 179TH STREET (I-5 TO NE 50TH AVE)
PLAN & PROFILE (NE 50TH AVE - SOUTH)

proud past, promising future
CLARK COUNTY
WASHINGTON

N:\CIP\PROJECTS\381122-NE179th-East\DESIGN\Dwg\179thEPP26.dwg, 12/18/2003 1:29:25 PM, kerlinr

PRELIMINARY

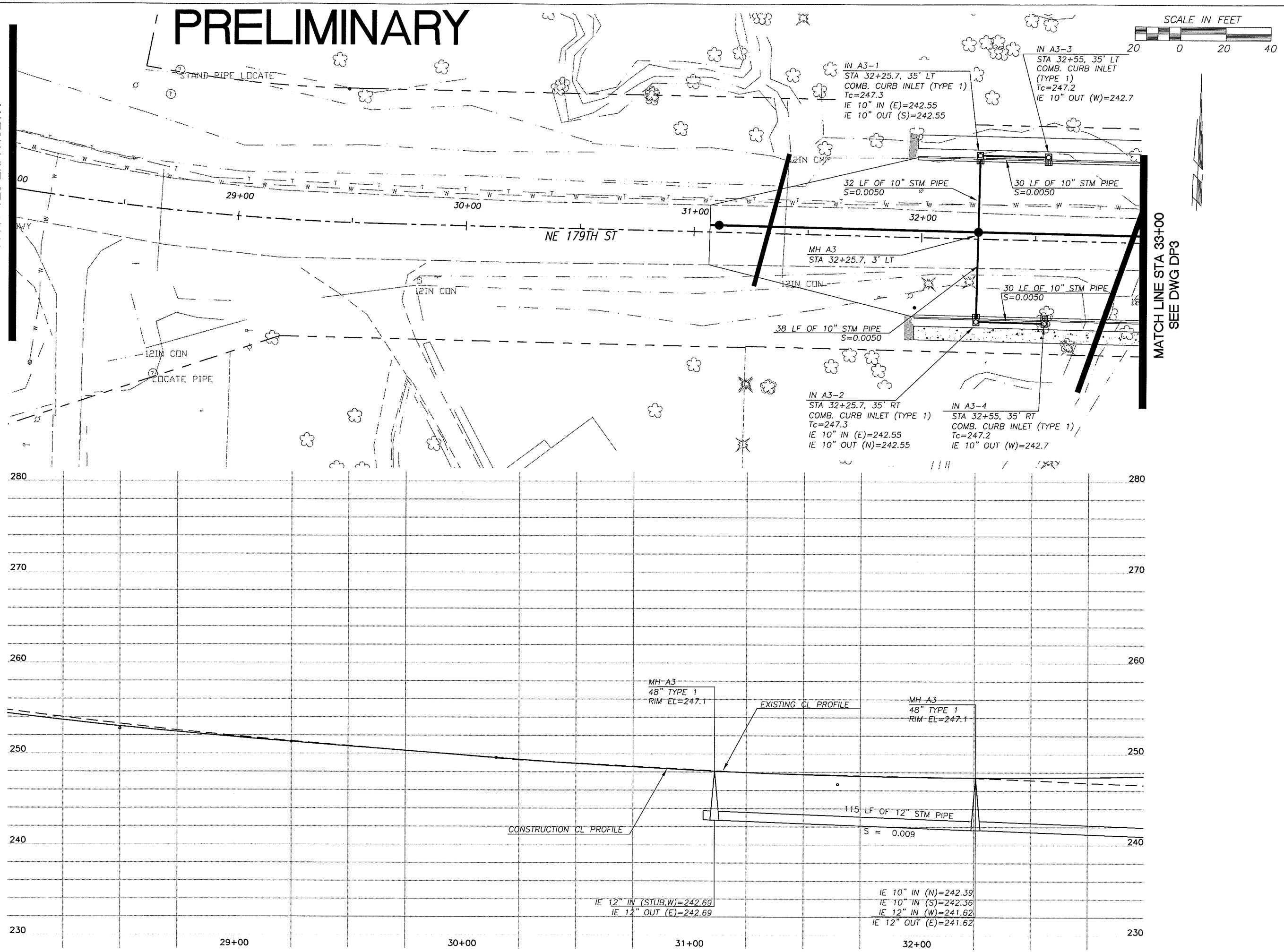

DESIGNED	JM
DRAWN	RK
CRP	381122
HOR.	20
VERT.	5
DATE	12/22/03
DWG:	DP2
SHEET	OF

CALL 48 HOURS BEFORE YOU DIG
1-800-553-4344
"It's the Law"
NORTHWEST UTILITIES NOTIFICATION CENTER

STATE OF WASHINGTON
MICHAEL J. WILLIS
REGISTERED PROFESSIONAL ENGINEER
EXPIRES JULY 7, 2005

DESIGN & ENGINEERING DIVISION
DESIGN SECTION

NE 179TH STREET (I-5 TO NE 50TH AVE)
DRAINAGE PLAN STA 28+00 TO STA 33+00

proud past, promising future
CLARK COUNTY
WASHINGTON

N:\CIP\PROJECTS\381122-NE179th-East\DESIGN\Dwg\179hEDP2.dwg, 12/16/2003 2:39:44 PM, kurtinr

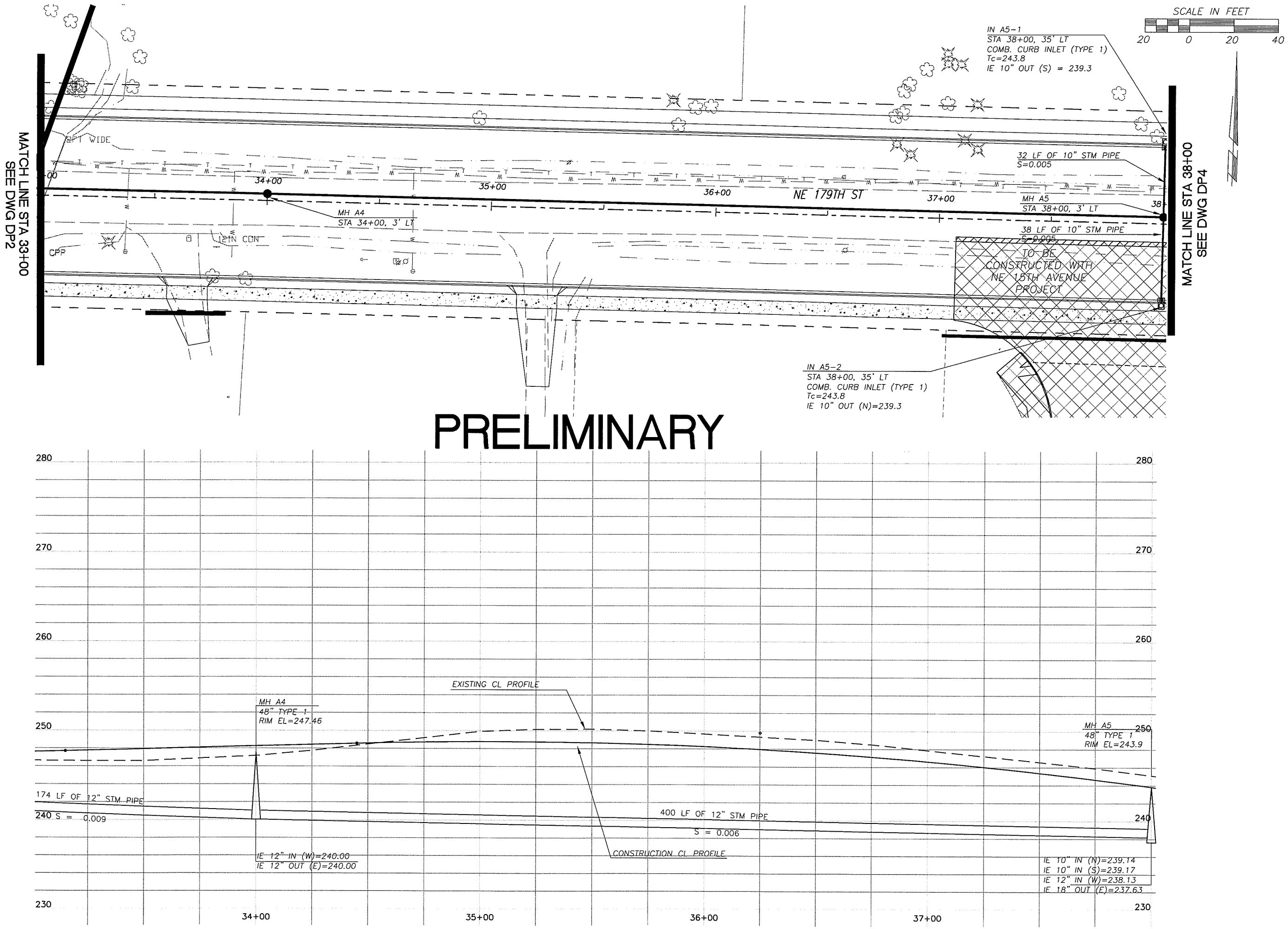

DESIGNED JM
DRAWN RK
CRP 381122
HOR. 20
VERT. 5
DATE 12/22/03
DWG: DP3
SHEET X OF X

CALL 48 HOURS BEFORE YOU DIG
1-800-553-4344
"It's the Law"
NORTHWEST UTILITIES NOTIFICATION CENTER

MILLER, STEVEN D. STATE OF WASHINGTON 22135 REGISTERED PROFESSIONAL ENGINEER
EXPIRES: JULY 7, 2005

DESIGN & ENGINEERING DIVISION
DESIGN SECTION

NE 179TH STREET (I-5 TO NE 50TH AVE)
DRAINAGE PLAN STA 33+00 TO STA 38+00

proud past, promising future
CLARK COUNTY WASHINGTON

N:\CIP\PROJECTS\381122-NE179th-East\DESIGN\Dwg\179thEDP3.dwg, 12/16/2003 2:43:43 PM, kerlinr

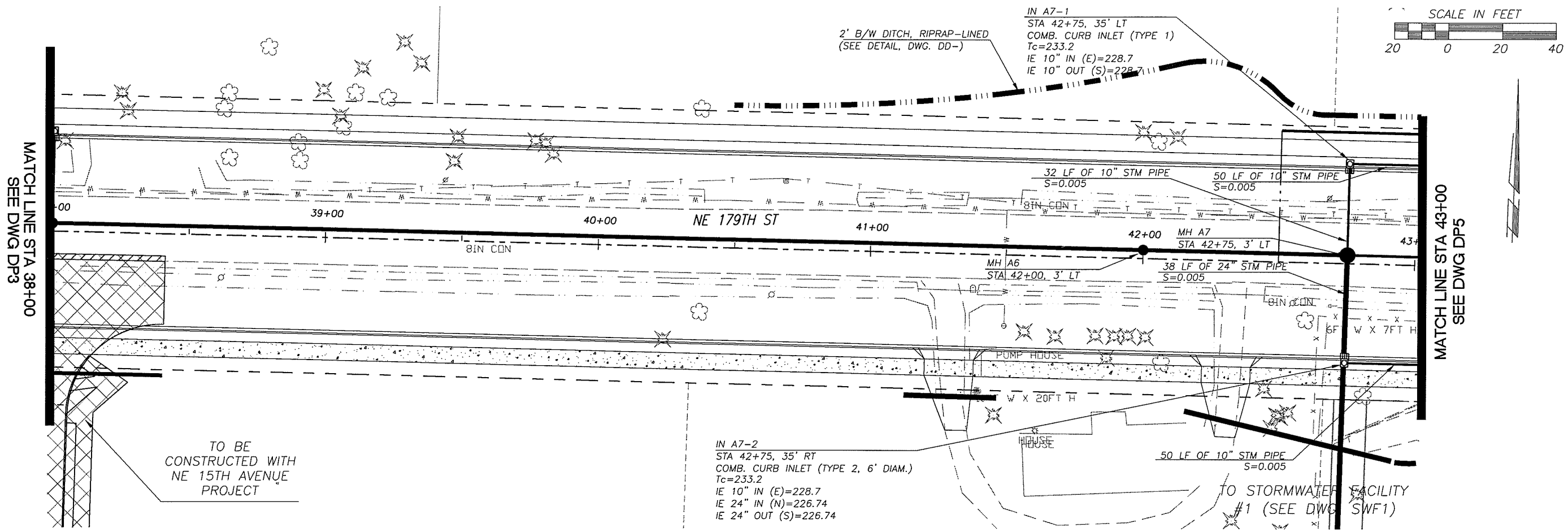

PRELIMINARY

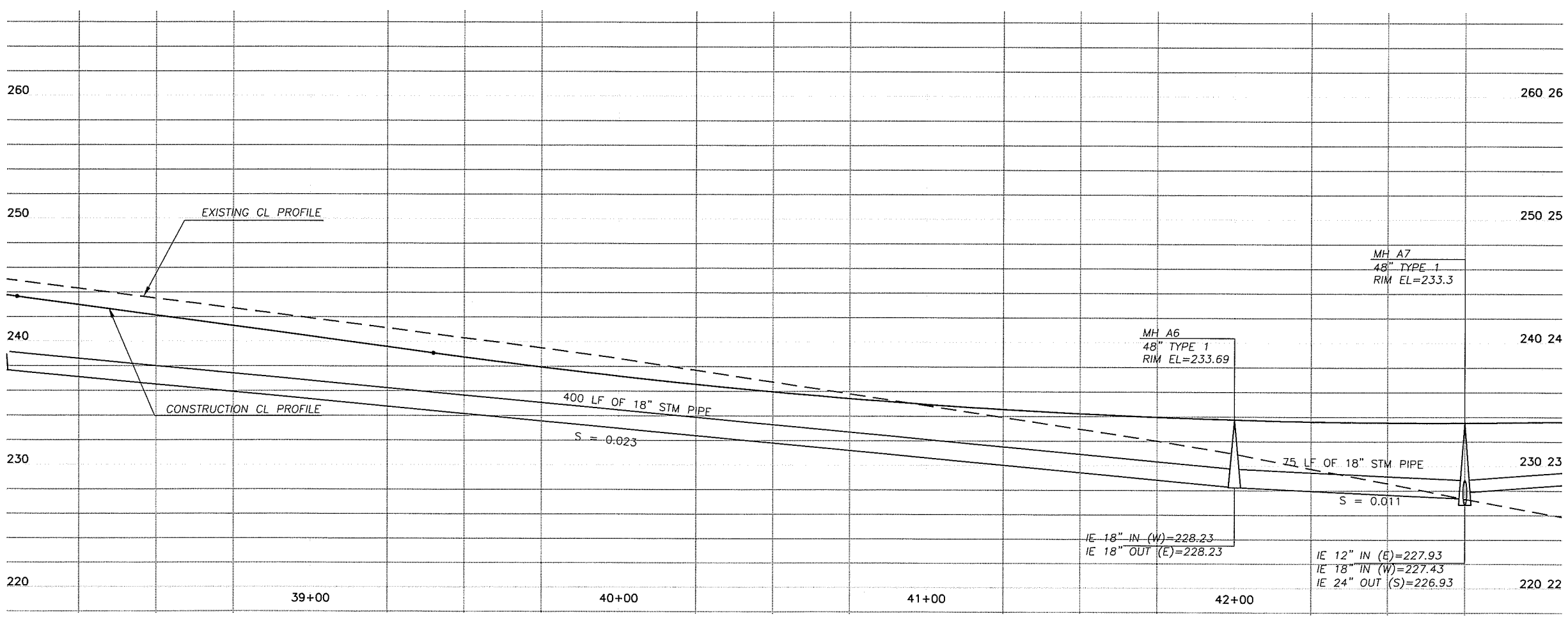

DESIGNED	JM
DRAWN	RK
CRP	381122
HOR.	20
VERT.	5
DATE	12/22/03
DWG:	DP4
SHEET	OF

CALL 48 HOURS BEFORE YOU DIG 1-800-553-4344 "It's the Law" NORTHWEST UTILITIES NOTIFICATION CENTER

STATE OF WASHINGTON 31148 REGISTERED PROFESSIONAL ENGINEER
EXPIRES: JULY 7, 2005

DESIGN & ENGINEERING DIVISION
DESIGN SECTION

NE 179TH STREET (I-5 TO NE 50TH AVE)
DRAINAGE PLAN STA 38+00 TO STA 43+00

proud past, promising future
CLARK COUNTY WASHINGTON

N:\CIP\PROJECTS\381122-NE179th-East\DESIGN\Dwg\179thEDP4.dwg, 12/16/2003 3:00:24 PM, kerlinr

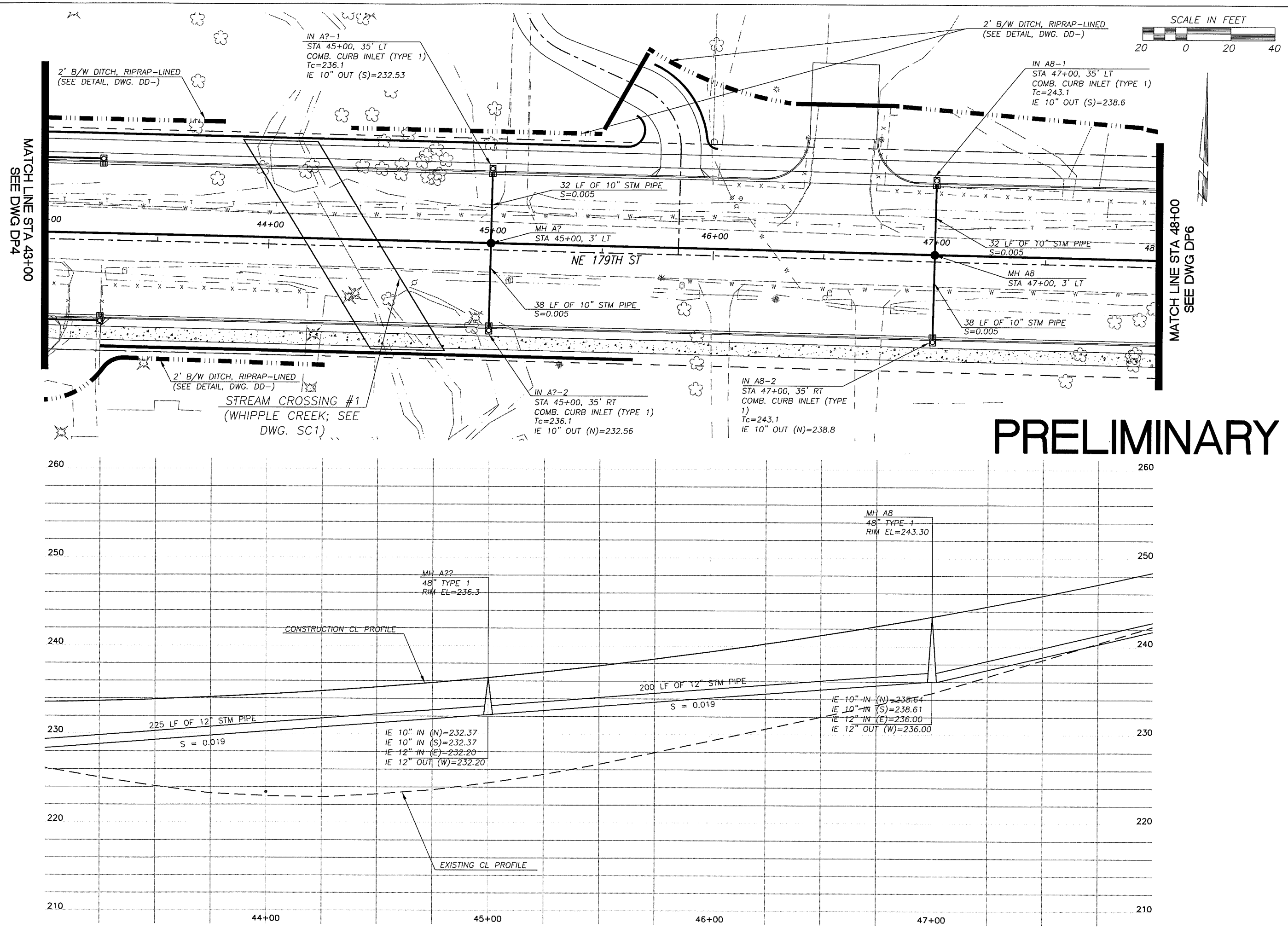

DESIGNED	JM
DRAWN	RK
CRP	381122
HOR.	20
VERT.	5
DATE	12/22/03
DWG:	DP5
SHEET	OF

CALL 48 HOURS BEFORE YOU DIG 1-800-553-4344 "It's the Law" NORTHWEST UTILITIES NOTIFICATION CENTER

STATE OF WASHINGTON MILLER 37148 REGISTERED PROFESSIONAL ENGINEER
EXPIRES JULY 7, 2005

DESIGN & ENGINEERING DIVISION
DESIGN SECTION

NE 179TH STREET (I-5 TO NE 50TH AVE)
DRAINAGE PLAN STA 43+00 TO STA 48+00

CLARK COUNTY WASHINGTON
proud past, promising future

N:\CIP\PROJECTS\381122-NE179th-East\DESIGN\Dwg\179thEDP5.dwg, 12/16/2003 3:17:06 PM, kerlinr

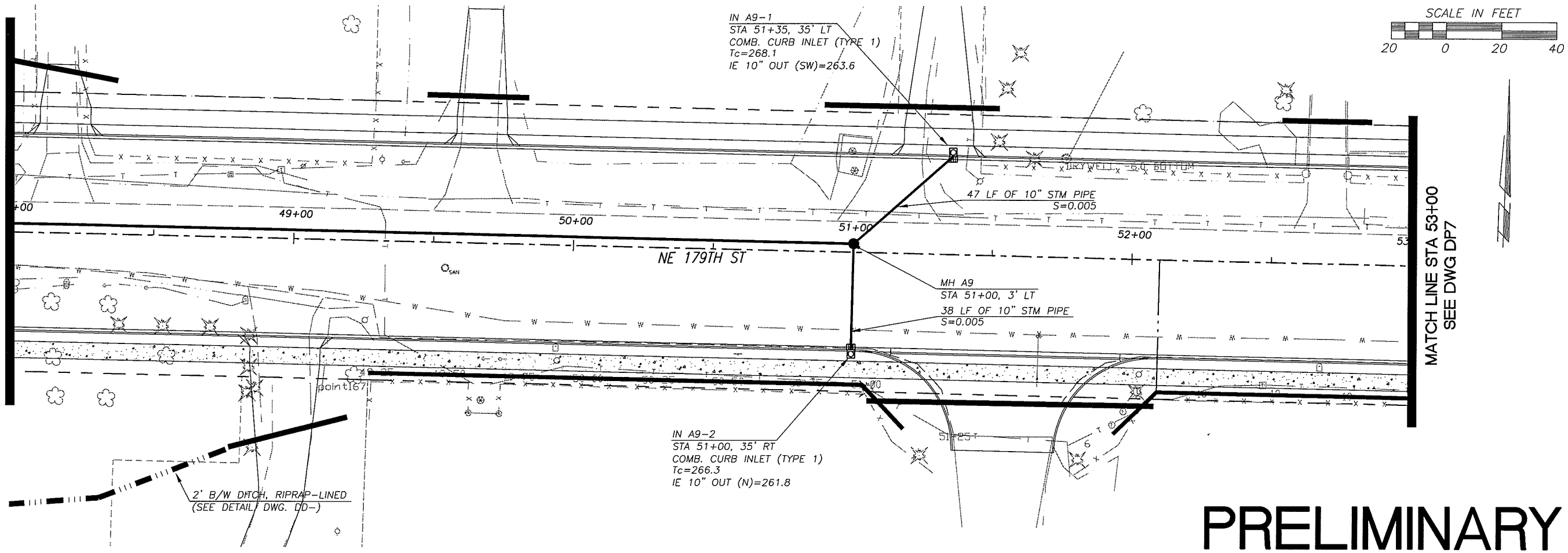

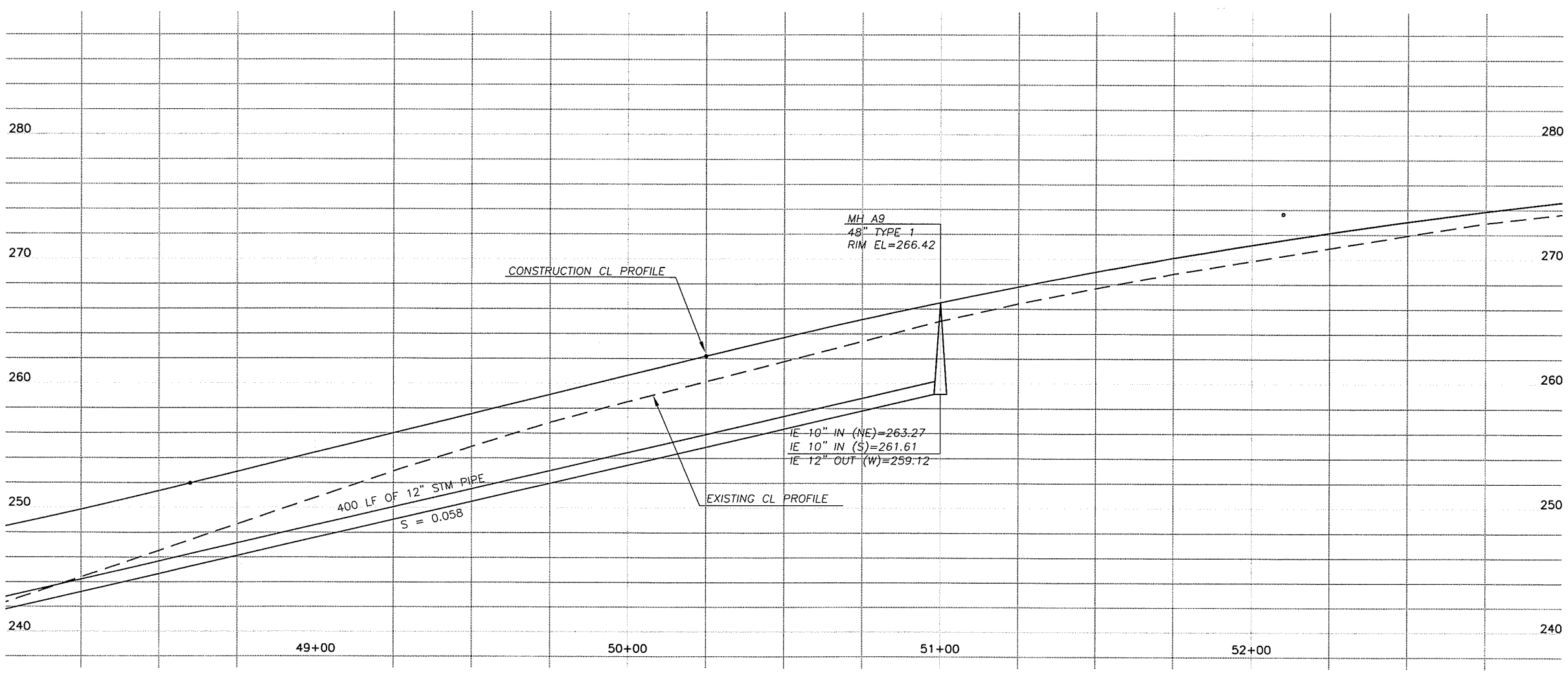

DESIGNED	JM
DRAWN	RK
CRP	381122
HOR.	20
VERT.	5
DATE	12/22/03
DWG:	DP6
SHEET	OF

CALL 48 HOURS BEFORE YOU DIG 1-800-553-4344 "It's the Law" NORTHWEST UTILITIES NOTIFICATION CENTER

STATE OF WASHINGTON JOHN M. LINE 31148 REGISTERED PROFESSIONAL ENGINEER
EXPIRES JULY 7, 2005

DESIGN & ENGINEERING DIVISION
DESIGN SECTION

NE 179TH STREET (I-5 TO NE 50TH AVE)
DRAINAGE PLAN STA 48+00 TO STA 53+00

proud past, promising future
CLARK COUNTY WASHINGTON

N:\CIP\PROJECTS\381122-NE179th-East\DESIGN\Dwg\179thEDP6.dwg, 12/16/2003 3:19:03 PM, kerlinr

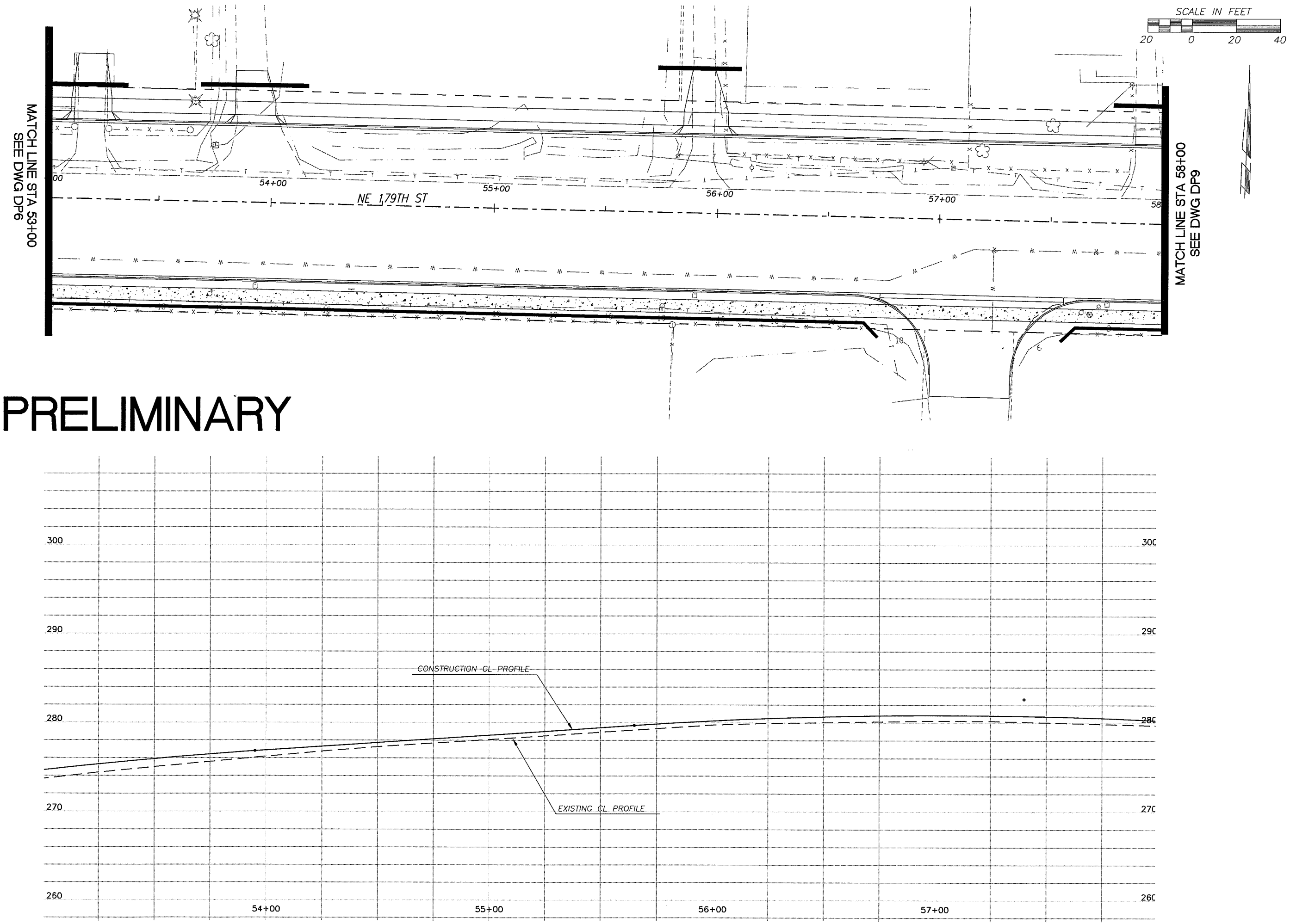

PRELIMINARY

DESIGNED	JM
DRAWN	RK
CRP	381122
HOR.	20
VERT.	5
DATE	12/22/03
DWG:	DP7
SHEET	OF

CALL 48 HOURS BEFORE YOU DIG
1-800-553-4344
"It's the Law"
NORTHWEST UTILITIES NOTIFICATION CENTER

STATE OF WASHINGTON
MARK E. KERLINR
21148
REGISTERED PROFESSIONAL ENGINEER
EXPIRES JULY 7, 2005

DESIGN & ENGINEERING DIVISION
DESIGN SECTION

NE 179TH STREET (I-5 TO NE 50TH AVE)
DRAINAGE PLAN STA 53+00 TO STA 58+00

proud past, promising future
CLARK COUNTY
WASHINGTON

N:\CIP\PROJECTS\381122-NE179th-East\DESIGN\Dwg\179thEDP7.dwg, 12/16/2003 3:20:27 PM, kerlinr

PRELIMINARY

SCALE IN FEET
20 0 20 40

MATCH LINE STA 58+00
SEE DWG DP7

59+00
60+00
61+00
62+00
63

NE 179TH ST

2' B/W DITCH, RIPRAP-LINED
(SEE DETAIL, DWG. DD-)

2' B/W DITCH, RIPRAP-LINED
(SEE DETAIL, DWG. DD-)

MATCH LINE STA 63+00
SEE DWG DP9

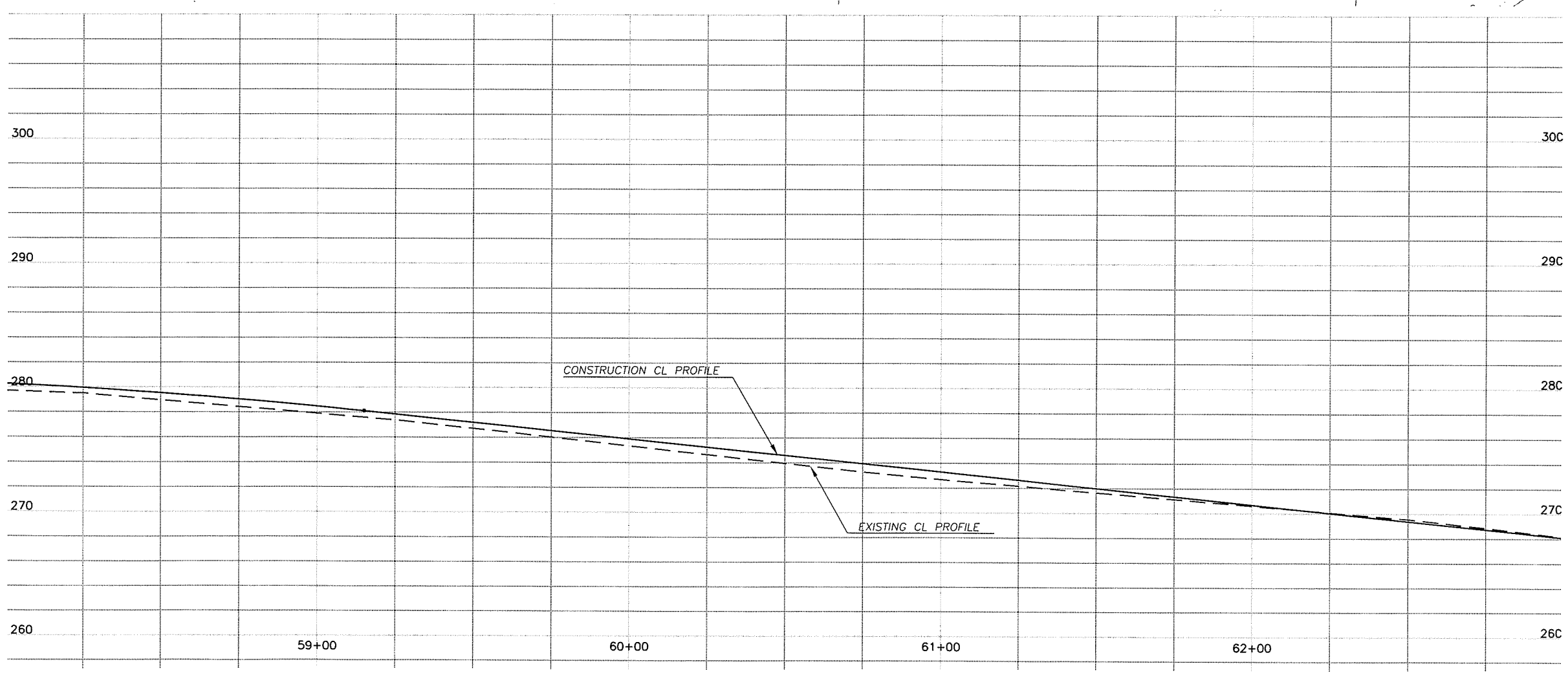

DESIGNED	JM
DRAWN	RK
CRP	381122
HOR.	20
VERT.	5
DATE	12/22/03
DWG:	DP8
SHEET	OF

CALL 48 HOURS BEFORE YOU DIG
1-800-553-4344
"It's the Law"
NORTHWEST UTILITIES NOTIFICATION CENTER

STATE OF WASHINGTON
MICHAEL D. WASHBURN
21148
REGISTERED PROFESSIONAL ENGINEER
EXPIRES JULY 7, 2005

DESIGN & ENGINEERING DIVISION
DESIGN SECTION

NE 179TH STREET (I-5 TO NE 50TH AVE)
DRAINAGE PLAN STA 58+00 TO STA 63+00

proud past, promising future
CLARK COUNTY
WASHINGTON

N:\CIP\PROJECTS\381122-NE179th-East\DESIGN\Dwg\179thEDP8.dwg, 12/16/2003 3:30:45 PM, kerlinr

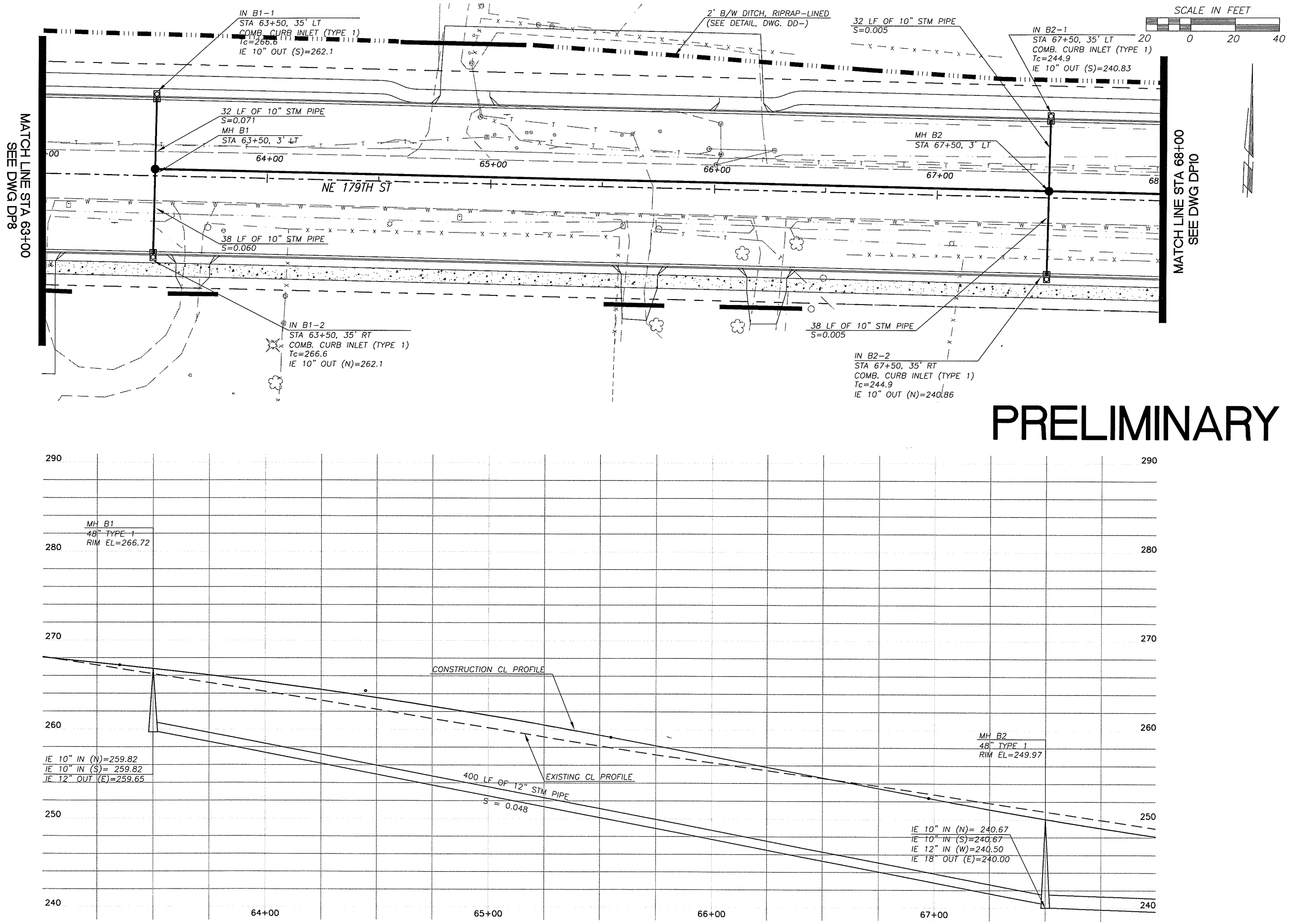

DESIGNED	JM
DRAWN	RK
CRP	381122
HOR.	20
VERT.	5
DATE	12/22/03
DWG:	DP9
SHEET	OF

CALL 48 HOURS BEFORE YOU DIG
1-800-553-4344
"It's the Law"
NORTHWEST UTILITIES NOTIFICATION CENTER

STATE OF WASHINGTON
MARK E. KERLINE
PROFESSIONAL ENGINEER
EXPIRES JULY 7, 2005

DESIGN & ENGINEERING DIVISION
DESIGN SECTION

NE 179TH STREET (I-5 TO NE 50TH AVE)
DRAINAGE PLAN STA 63+00 TO STA 68+00

proud past, promising future
CLARK COUNTY
WASHINGTON

N:\CIP\PROJECTS\381122-NE179th-East\DESIGN\Dwg\179thEDP9.dwg, 12/16/2003 3:36:39 PM, kerlinr

PRELIMINARY

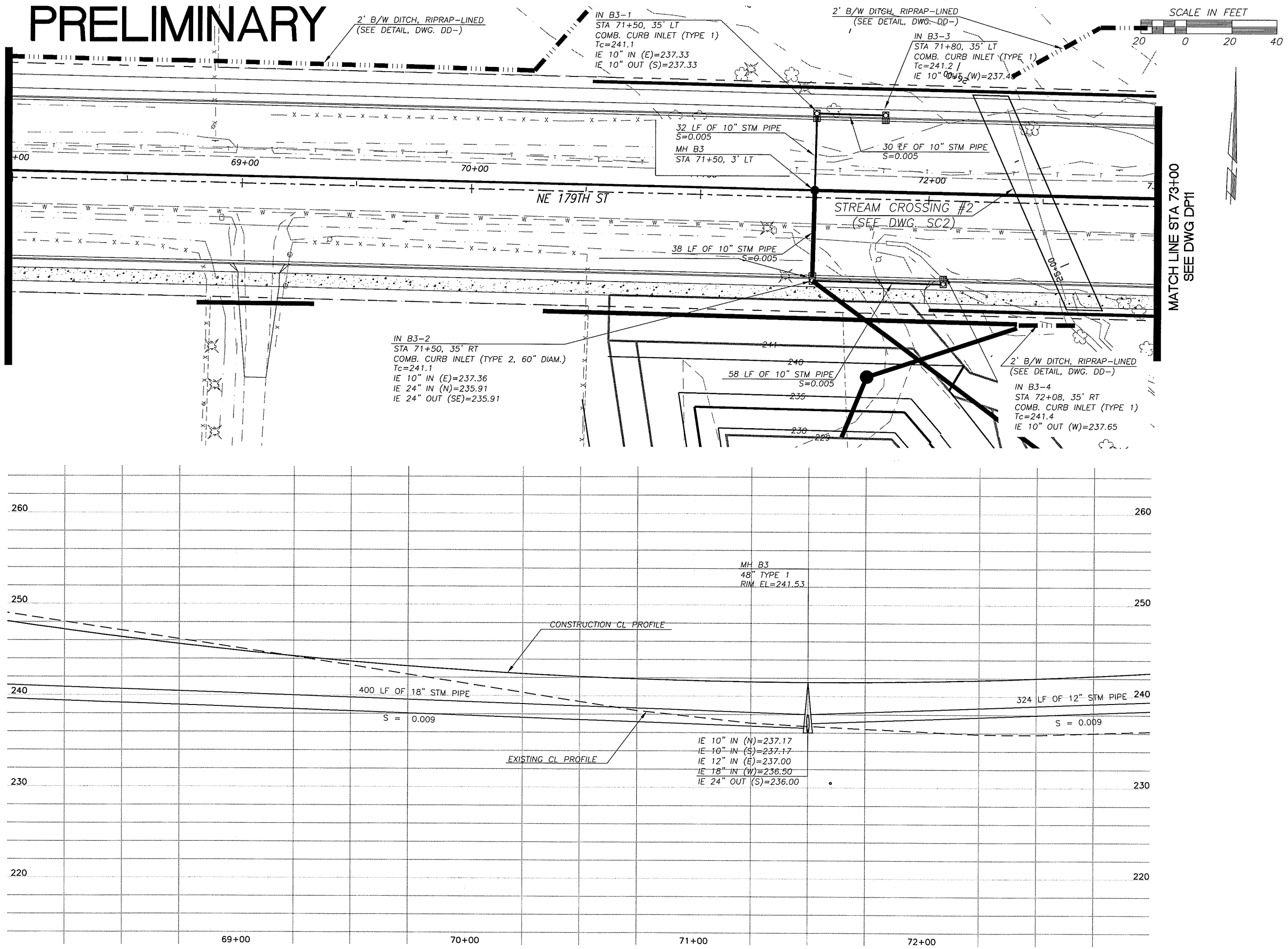

DESIGNED	JM
DRAWN	RK
CRP	381122
HOR.	20
VERT.	5
DATE	12/22/03
DWG:	DP10
SHEET	OF

CALL 48 HOURS BEFORE YOU DIG
1-800-553-4344
"It's the Law"
NORTHWEST UTILITIES NOTIFICATION CENTER

STATE OF WASHINGTON
MICHAEL D. MARTIN
REGISTERED PROFESSIONAL ENGINEER
EXPIRES JULY 7, 2005

DESIGN & ENGINEERING DIVISION
DESIGN SECTION

NE 179TH STREET (I-5 TO NE 50TH AVE)
DRAINAGE PLAN STA 68+00 TO STA 73+00

proud past, promising future
CLARK COUNTY
WASHINGTON

N:\CIP\PROJECTS\381122-NE179th-East\DESIGN\Dwg\179thEDP10.dwg, 12/16/2003 3:43:35 PM, kerlinr

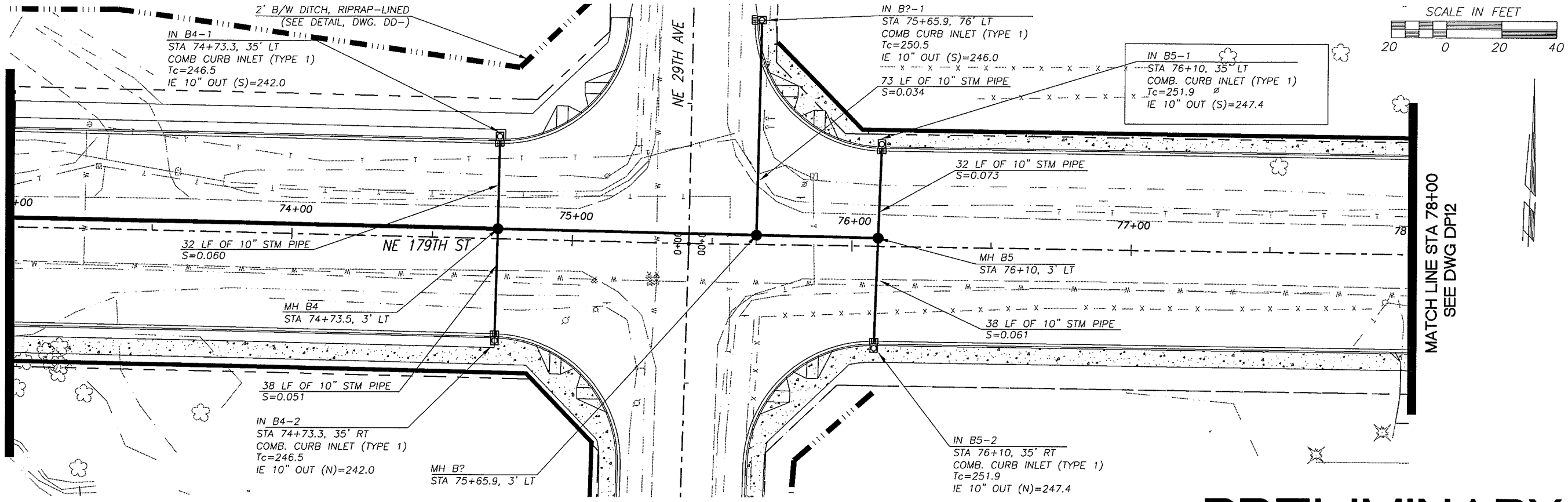

PRELIMINARY

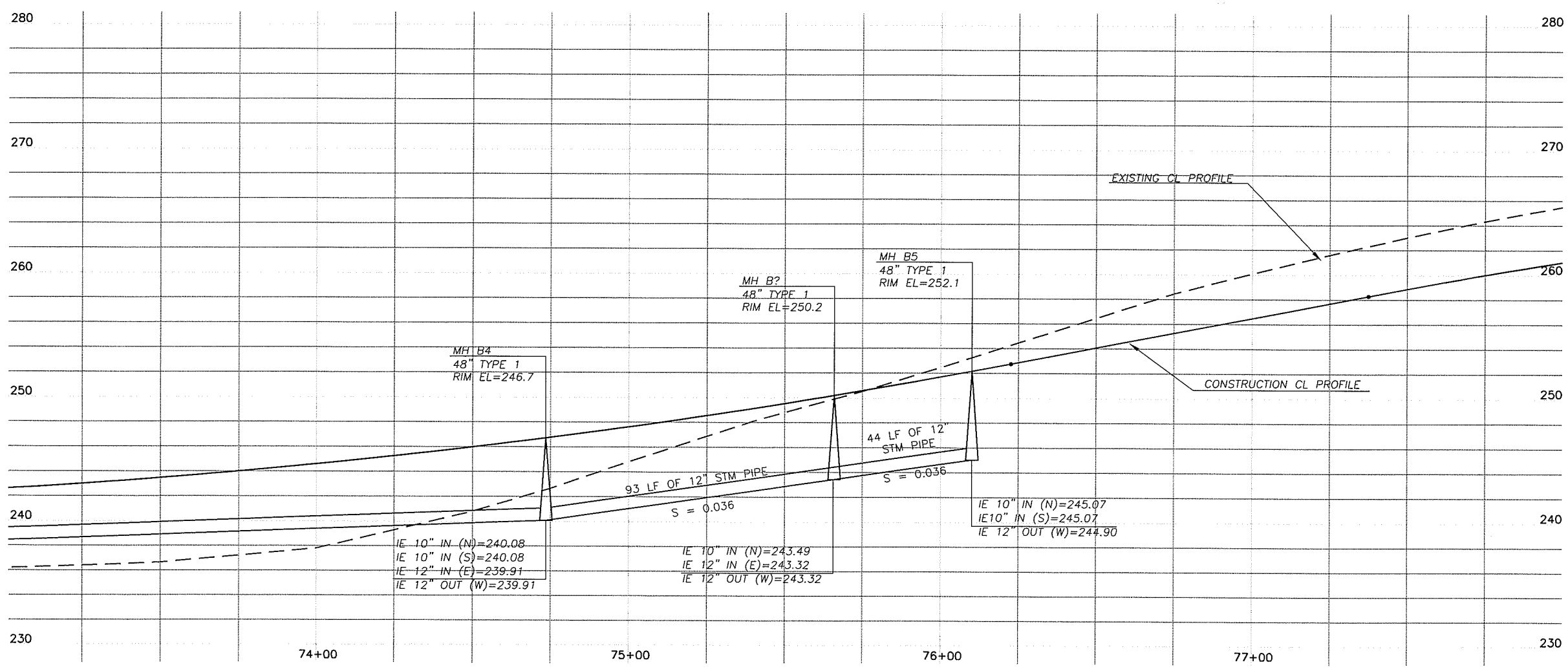

DESIGNED JM
DRAWN RK
CRP 381122
HOR. 20
VERT. 5
DATE 12/22/03
DWG: DP11
SHEET OF

CALL 48 HOURS BEFORE YOU DIG 1-800-553-4344 "It's the Law" NORTHWEST UTILITIES NOTIFICATION CENTER

STATE OF WASHINGTON JAMES L. ROBERTSON 31148 REGISTERED PROFESSIONAL ENGINEER EXPIRES JULY 7, 2005

DESIGN & ENGINEERING DIVISION
DESIGN SECTION

NE 179TH STREET (I-5 TO NE 50TH AVE)
DRAINAGE PLAN STA 73+00 TO STA 78+00

proud past, promising future
CLARK COUNTY WASHINGTON

N:\CIP\PROJECTS\381122-NE179th-East\DESIGN\Dwg\179thEDP11.dwg, 12/16/2003 3:49:49 PM, kerlinr

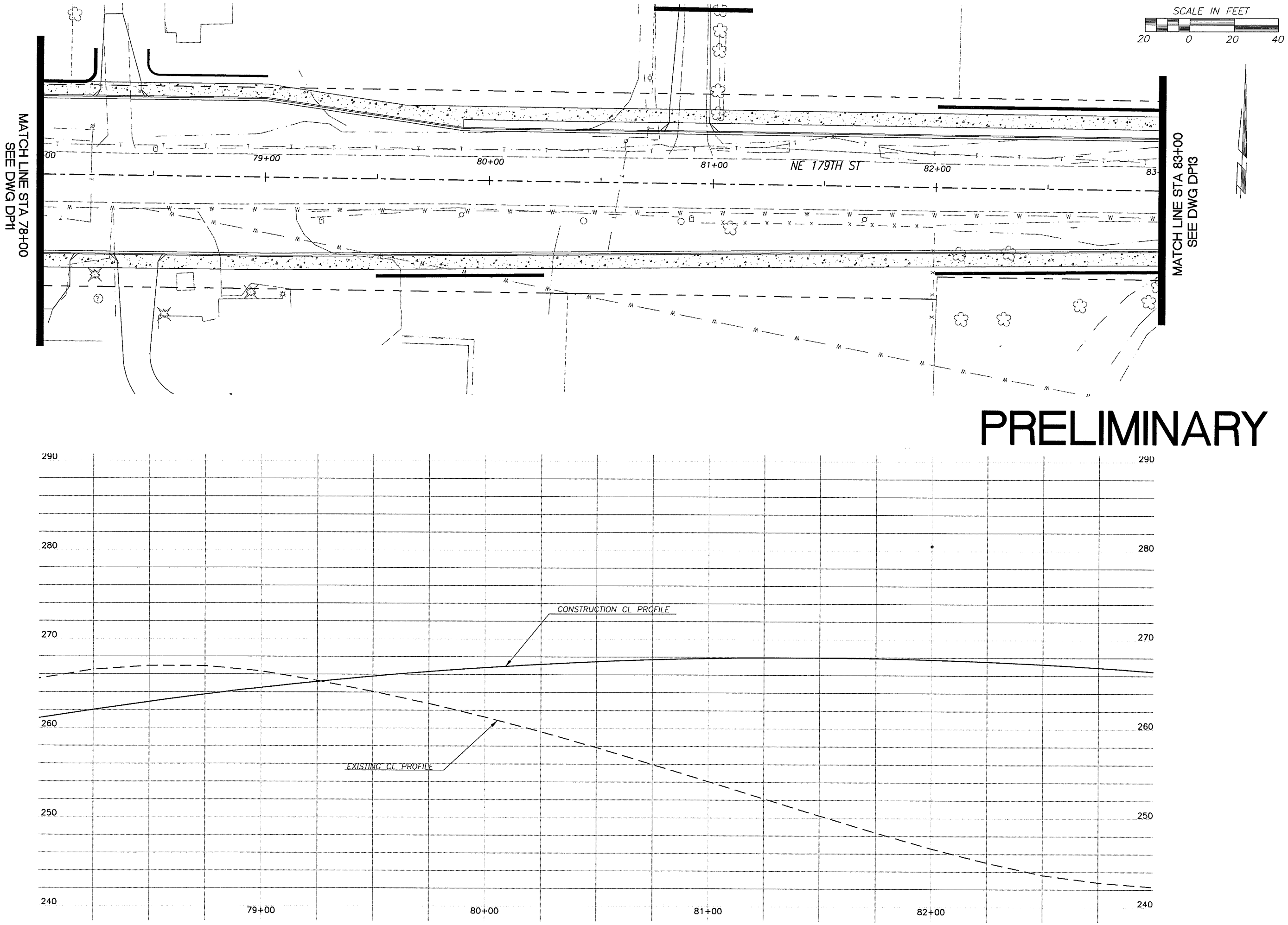

DESIGNED	JM
DRAWN	RK
CRP	381122
HOR.	20
VERT.	5
DATE	12/22/03
DWG:	DP12
SHEET	OF

CALL 48 HOURS BEFORE YOU DIG
1-800-553-4344
"It's the Law"
NORTHWEST UTILITIES NOTIFICATION CENTER

STATE OF WASHINGTON
MARK E. NIEMI
21148
PROFESSIONAL ENGINEER
EXPIRES JULY 7, 2005

DESIGN & ENGINEERING DIVISION
DESIGN SECTION

NE 179TH STREET (I-5 TO NE 50TH AVE)
DRAINAGE PLAN STA 78+00 TO STA 83+00

proud past, promising future
CLARK COUNTY
WASHINGTON

N:\CIP\PROJECTS\381122-NE179th-East\DESIGN\Dwg\179thEDP12.dwg, 12/16/2003 3:51:06 PM, kerlinr

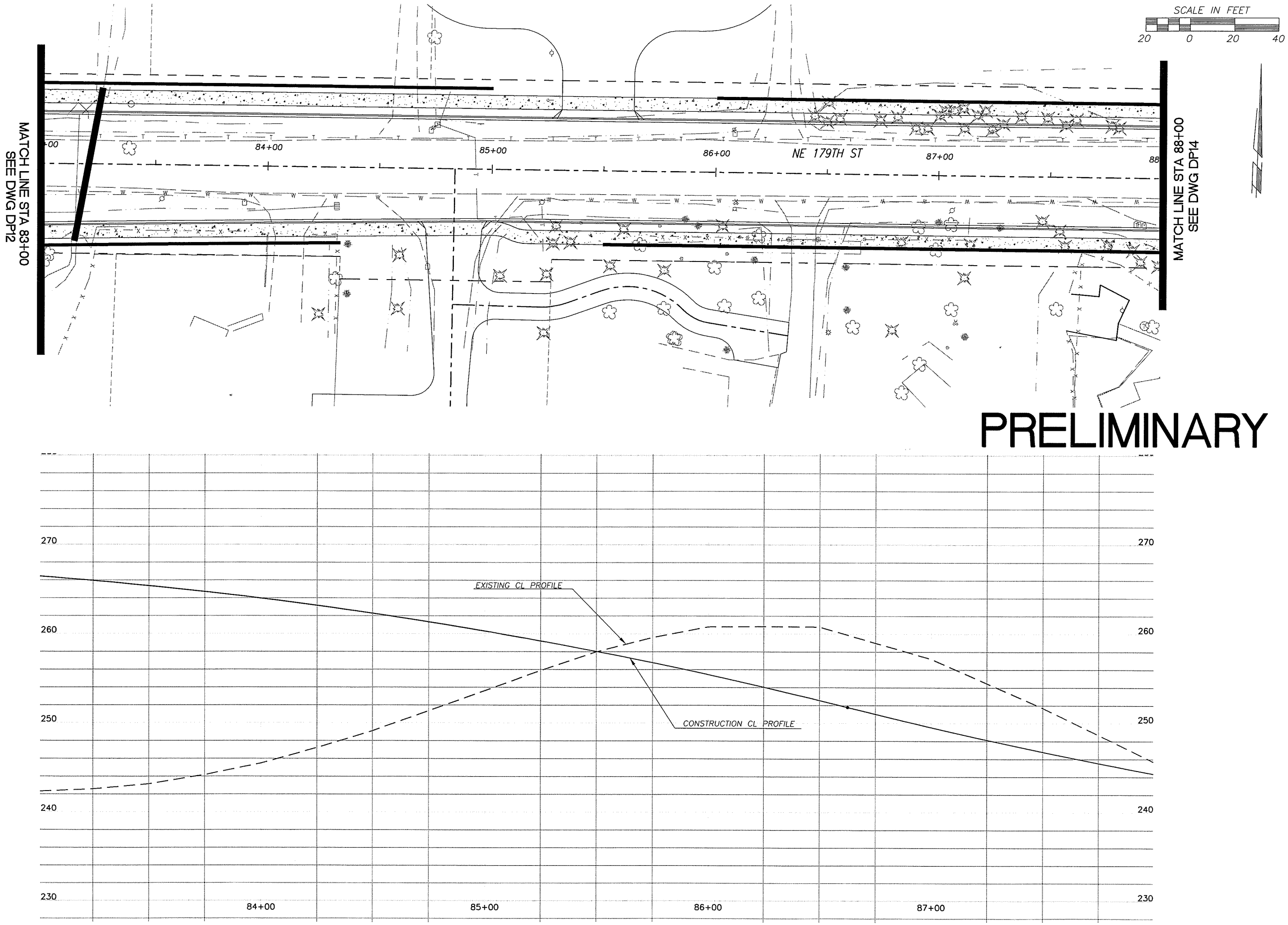

DESIGNED	JM
DRAWN	RK
CRP	381122
HOR.	20
VERT.	5
DATE	12/22/03
DWG:	DP13
SHEET	OF

CALL 48 HOURS BEFORE YOU DIG
1-800-553-4344
"It's the Law"
NORTHWEST UTILITIES NOTIFICATION CENTER

STATE OF WASHINGTON
MARK R. KERLINR
31148
REGISTERED PROFESSIONAL ENGINEER
EXPIRES: JULY 7, 2005

DESIGN & ENGINEERING DIVISION
DESIGN SECTION

NE 179TH STREET (I-5 TO NE 50TH AVE)
DRAINAGE PLAN STA 83+00 TO STA 88+00

proud past, promising future
CLARK COUNTY
WASHINGTON

N:\CIP\PROJECTS\381122-NE179th-East\DESIGN\Dwg\179thEDP13.dwg, 12/16/2003 3:52:14 PM, kerlinr

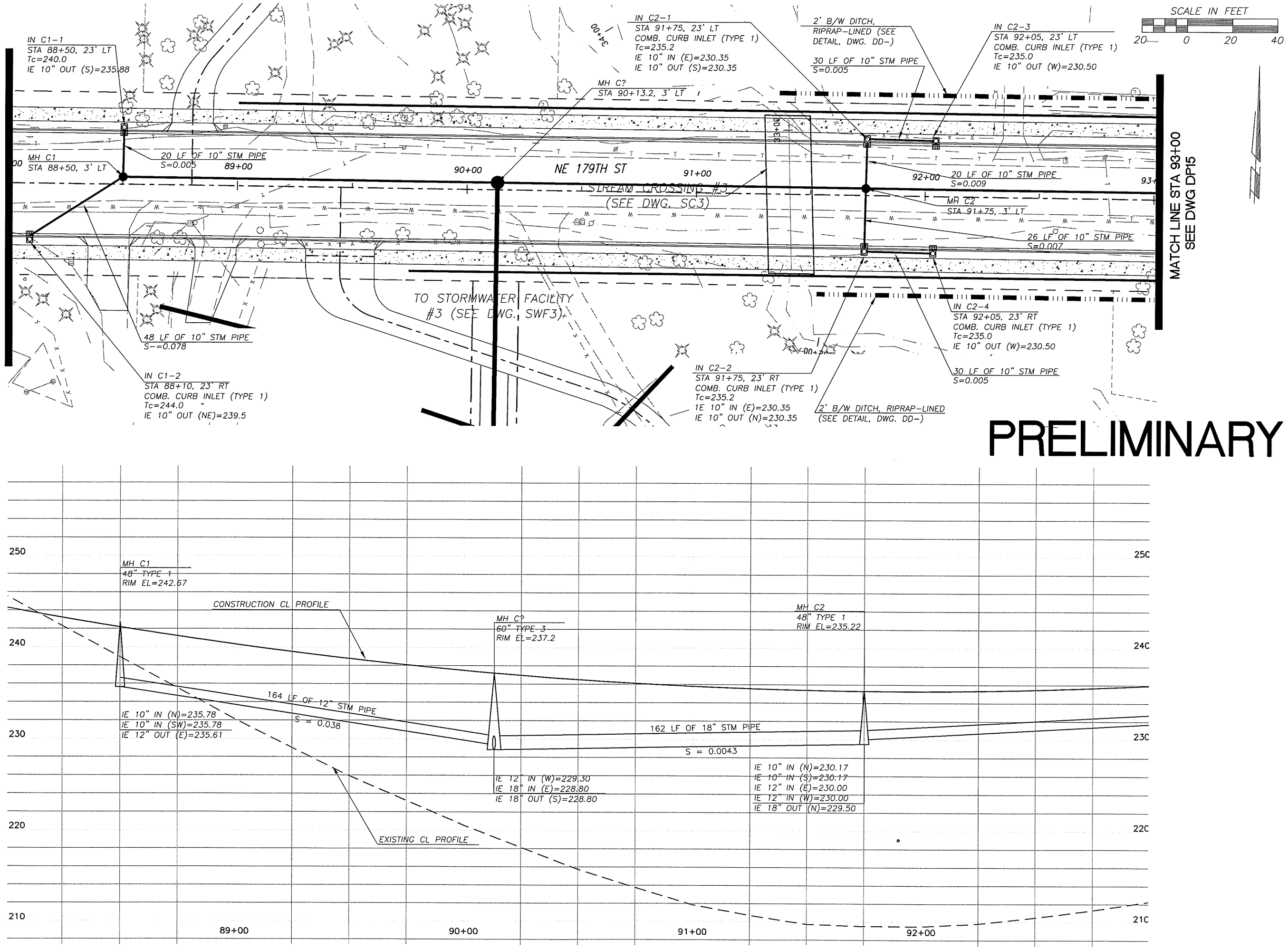

PRELIMINARY

DESIGNED JM
DRAWN RK
CRP 381122
HOR. 20
VERT. 5
DATE 12/22/03
DWG: DP14
SHEET OF

CALL 48 HOURS BEFORE YOU DIG
1-800-553-4344
"It's the Law"
NORTHWEST UTILITIES NOTIFICATION CENTER

STATE OF WASHINGTON
MARK E. WASHINGTON
PROFESSIONAL ENGINEER
EXPIRES JULY 7, 2005

DESIGN & ENGINEERING DIVISION
DESIGN SECTION

NE 179TH STREET (I-5 TO NE 50TH AVE)
DRAINAGE PLAN STA 88+00 TO STA 93+00

proud past, promising future
CLARK COUNTY
WASHINGTON

N:\CIP\PROJECTS\381122-NE179th-East\DESIGN\Dwg\179thEDP14.dwg, 12/16/2003 4:01:54 PM, kerlinr

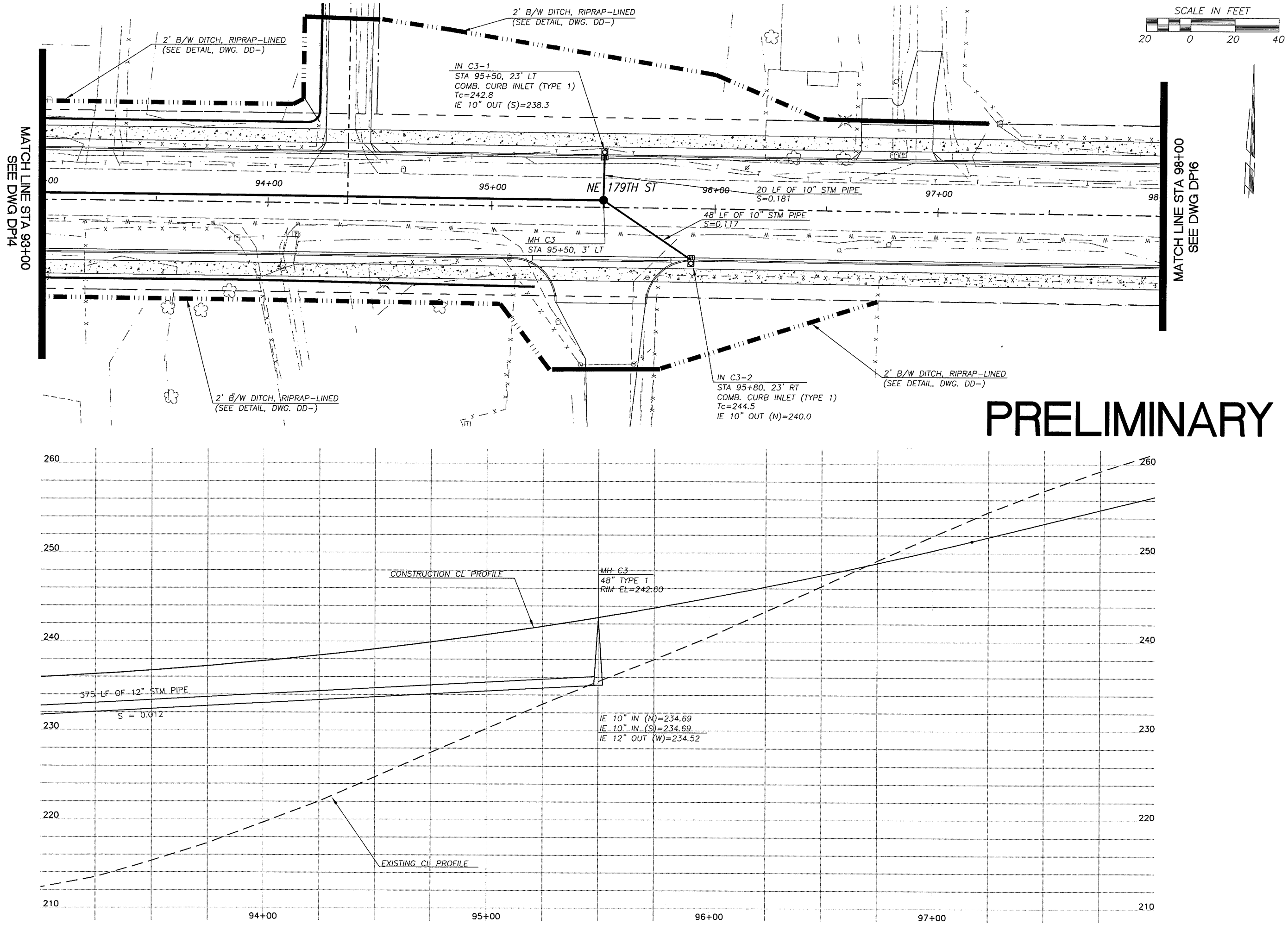

DESIGNED	JM
DRAWN	RK
CRP	381122
HOR.	20
VERT.	5
DATE	12/22/03
DWG.	DP15
SHEET	OF

CALL 48 HOURS BEFORE YOU DIG
1-800-553-4344
"It's the Law"
NORTHWEST UTILITIES NOTIFICATION CENTER

JOHN MILLER
STATE OF WASHINGTON
PROFESSIONAL ENGINEER
EXPIRES JULY 7, 2003

DESIGN & ENGINEERING DIVISION
DESIGN SECTION

NE 179TH STREET (I-5 TO NE 50TH AVE)
DRAINAGE PLAN STA 93+00 TO STA 98+00

proud past, promising future
CLARK COUNTY
WASHINGTON

N:\CIP\PROJECTS\381122-NE179th-East\DESIGN\Dwg\179thEDP15.dwg, 12/16/2003 4:04:36 PM, kerlinr

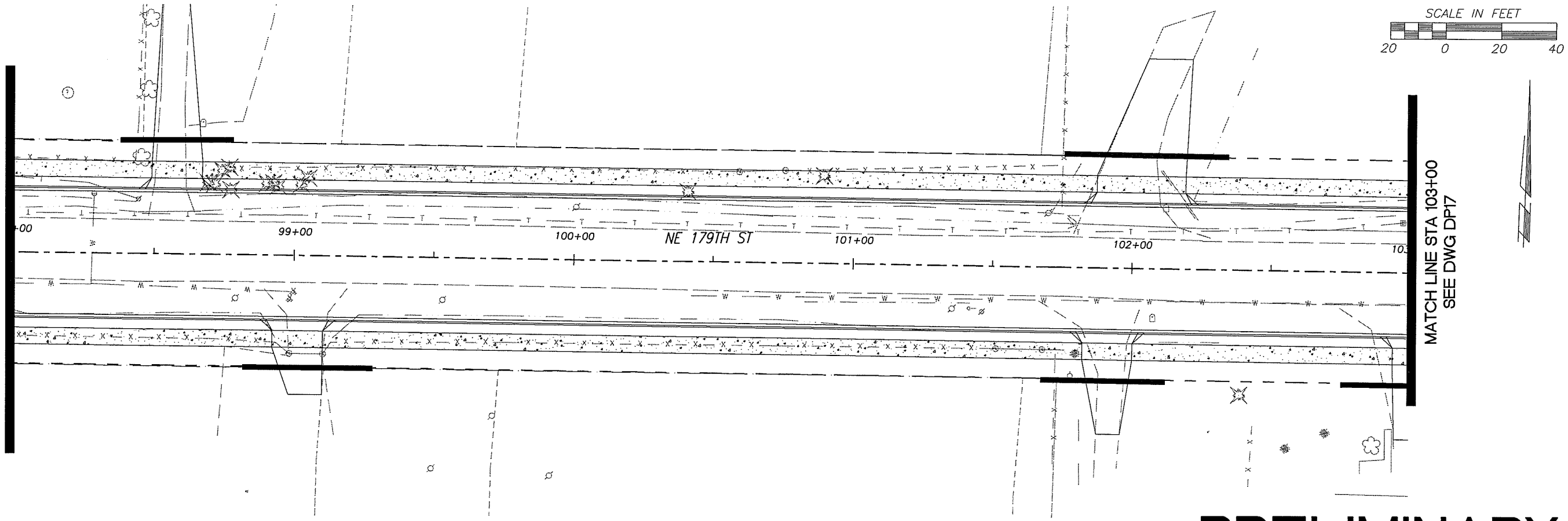

PRELIMINARY

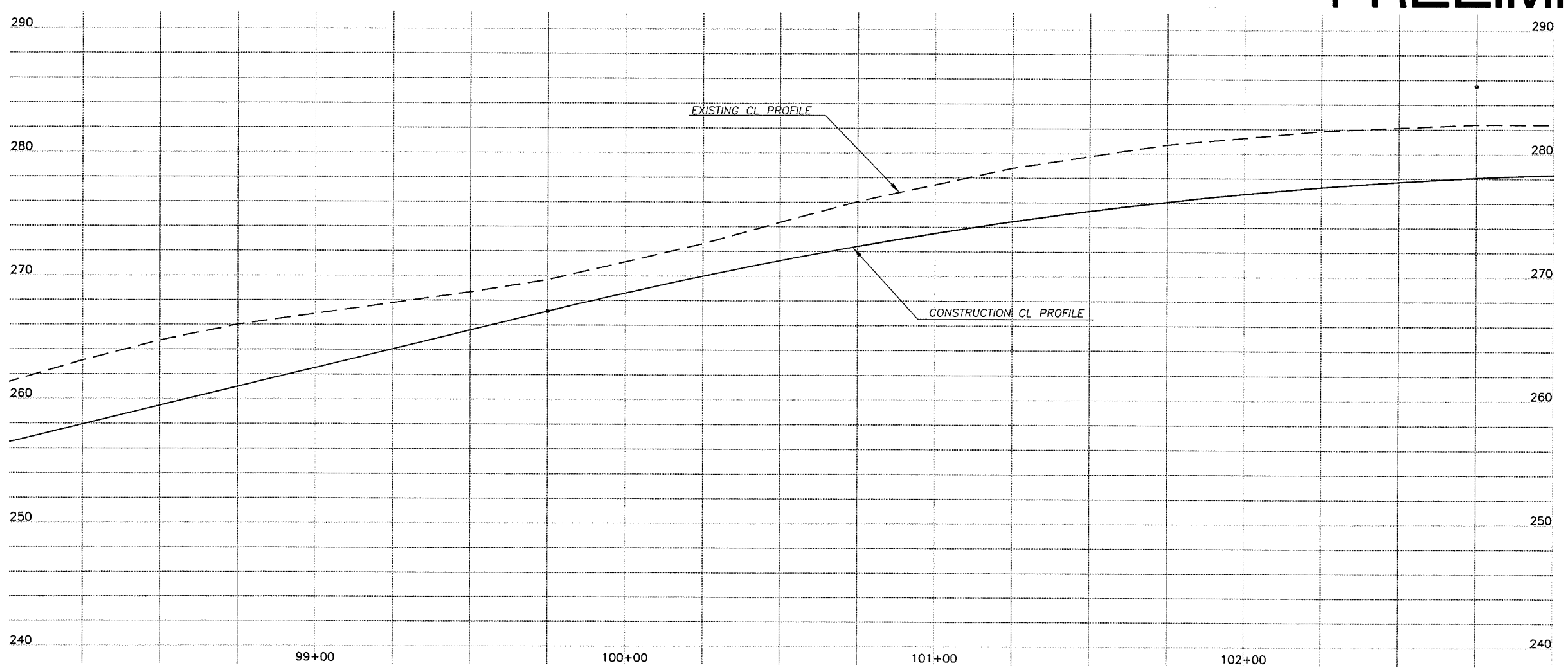

DESIGNED	JM
DRAWN	RK
CRP	381122
HOR.	20
VERT.	5
DATE	12/22/03
DWG:	DP16
SHEET	OF

CALL 48 HOURS BEFORE YOU DIG
1-800-553-4344
"It's the Law"
NORTHWEST UTILITIES NOTIFICATION CENTER

STEVEN M. LIAN
STATE OF WASHINGTON
PROFESSIONAL ENGINEER
EXPIRES JULY 7, 2005

DESIGN & ENGINEERING DIVISION
DESIGN SECTION

NE 179TH STREET (I-5 TO NE 50TH AVE)
DRAINAGE PLAN STA 98+00 TO STA 103+00

proud past, promising future
CLARK COUNTY
WASHINGTON

N:\CIP\PROJECTS\381122-NE179th-East\DESIGN\Dwg\179thEDP16.dwg, 12/16/2003 4:05:46 PM, kerlinr

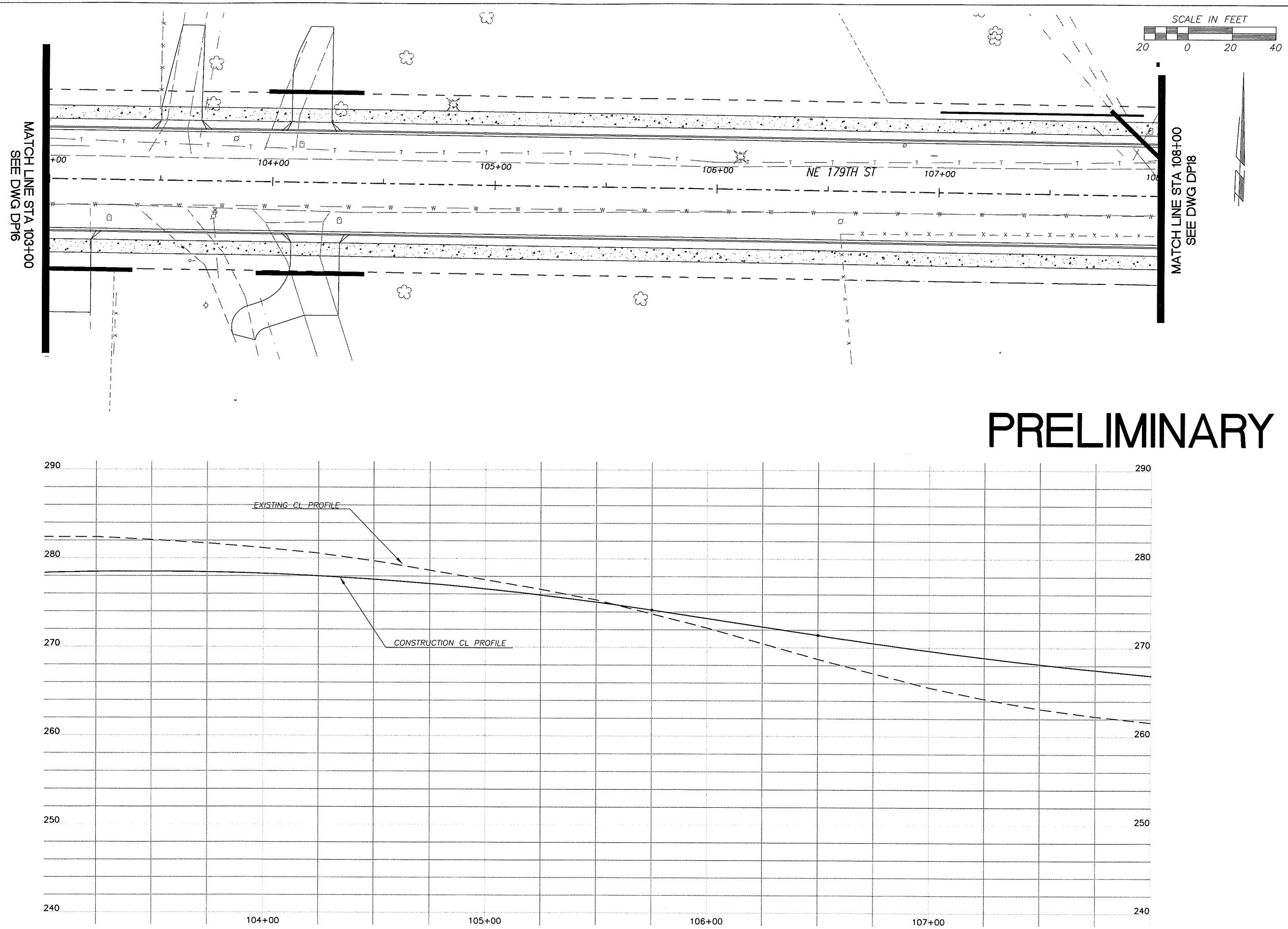

DESIGNED	JM
DRAWN	RK
CRP	381122
HOR.	20
VERT.	5
DATE	12/22/03
DWG:	DP17
SHEET	OF

CALL 48 HOURS BEFORE YOU DIG
1-800-553-4344
"It's the Law"
NORTHWEST UTILITIES NOTIFICATION CENTER

STEVEN D. WIGINGTON
STATE OF WASHINGTON
31148
REGISTERED PROFESSIONAL ENGINEER
EXPIRES JULY 7, 2005

DESIGN & ENGINEERING DIVISION
DESIGN SECTION

NE 179TH STREET (I-5 TO NE 50TH AVE)
DRAINAGE PLAN STA 103+00 TO STA 108+00

proud past, promising future
CLARK COUNTY
WASHINGTON

N:\CIP\PROJECTS\381122-NE179th-East\DESIGN\Dwg\179thEDP17.dwg, 12/16/2003 4:07:09 PM, kerlinr

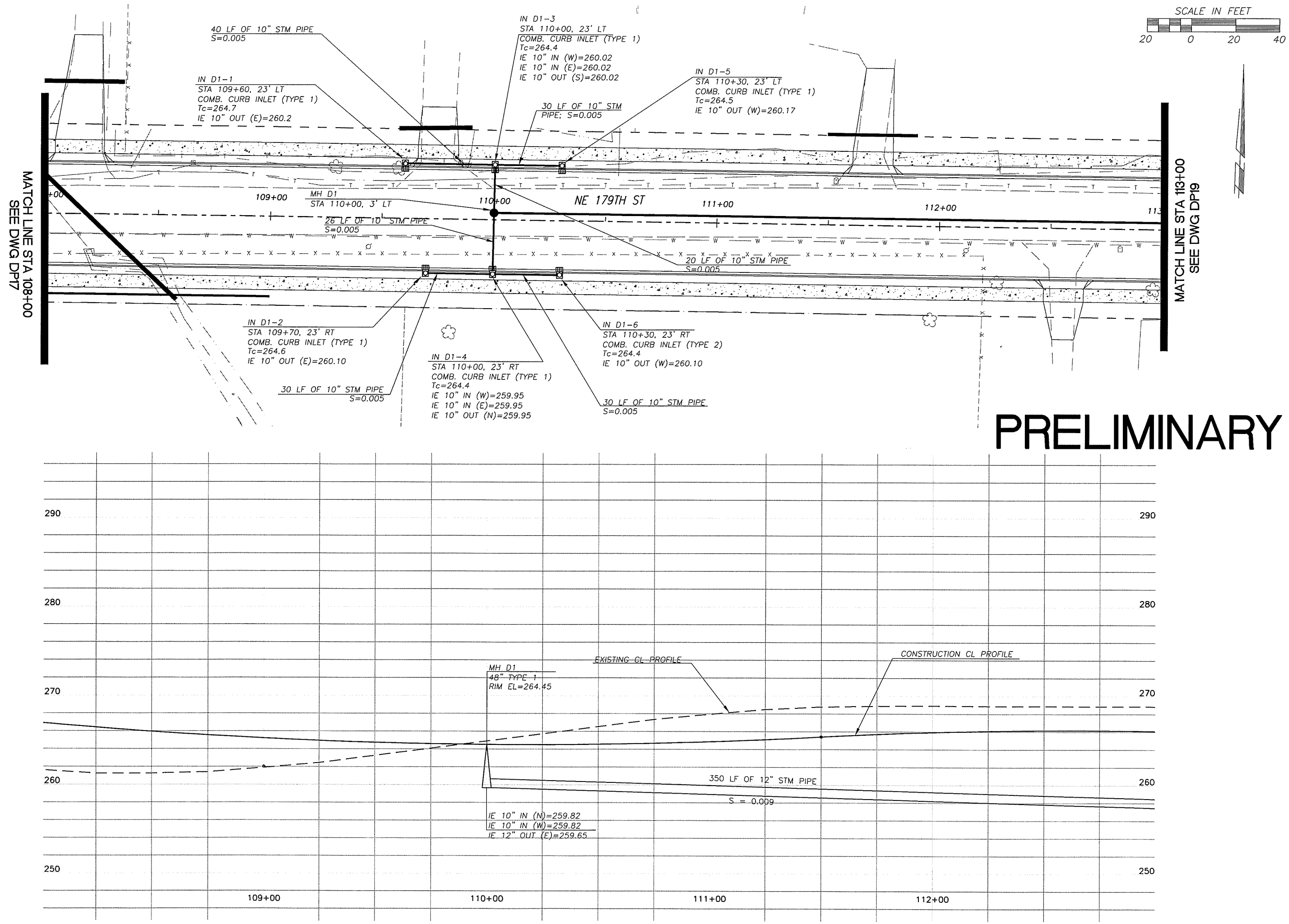

DESIGNED JM
DRAWN RK
CRP 381122
HOR. 20
VERT. 5
DATE 12/22/03
DWG: DP18
SHEET OF

CALL 48 HOURS BEFORE YOU DIG
1-800-553-4344
"It's the Law"
NORTHWEST UTILITIES NOTIFICATION CENTER

STATE OF WASHINGTON
MALINE
PROFESSIONAL ENGINEER
EXPIRES JULY 7, 2005

DESIGN & ENGINEERING DIVISION
DESIGN SECTION

NE 179TH STREET (I-5 TO NE 50TH AVE)
DRAINAGE PLAN STA 108+00 TO STA 113+00

proud past, promising future
CLARK COUNTY
WASHINGTON

N:\CIP\PROJECTS\381122-NE179th-East\DESIGN\Dwg\179thEDP18.dwg, 12/16/2003 4:17:15 PM, kerlinr

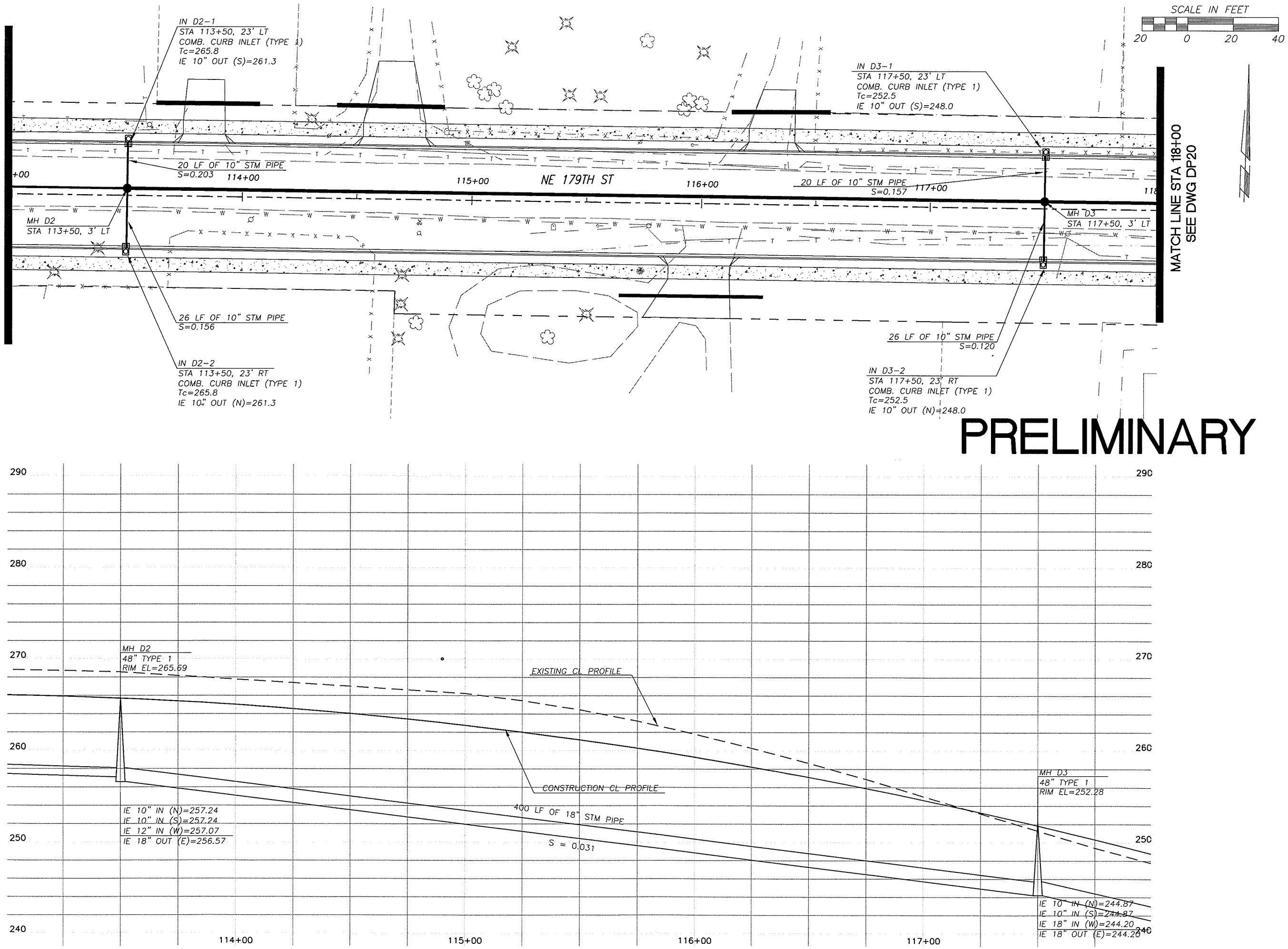

DESIGNED	JM
DRAWN	RK
CRP	381122
HOR.	20
VERT.	5
DATE	12/22/03
DWG:	DP19
SHEET	OF

CALL 48 HOURS BEFORE YOU DIG
1-800-553-4344
"It's the Law"
NORTHWEST UTILITIES NOTIFICATION CENTER

JOHN MILNE STATE OF WASHINGTON 31148 REGISTERED PROFESSIONAL ENGINEER
EXPIRES JULY 7, 2005

DESIGN & ENGINEERING DIVISION
DESIGN SECTION

NE 179TH STREET (I-5 TO NE 50TH AVE)
DRAINAGE PLAN STA 113+00 TO STA 118+00

proud past, promising future
CLARK COUNTY WASHINGTON

N:\CIP\PROJECTS\381122-NE179th-East\DESIGN\Dwg\179thEDP19.dwg, 12/16/2003 4:20:16 PM, kerlinr

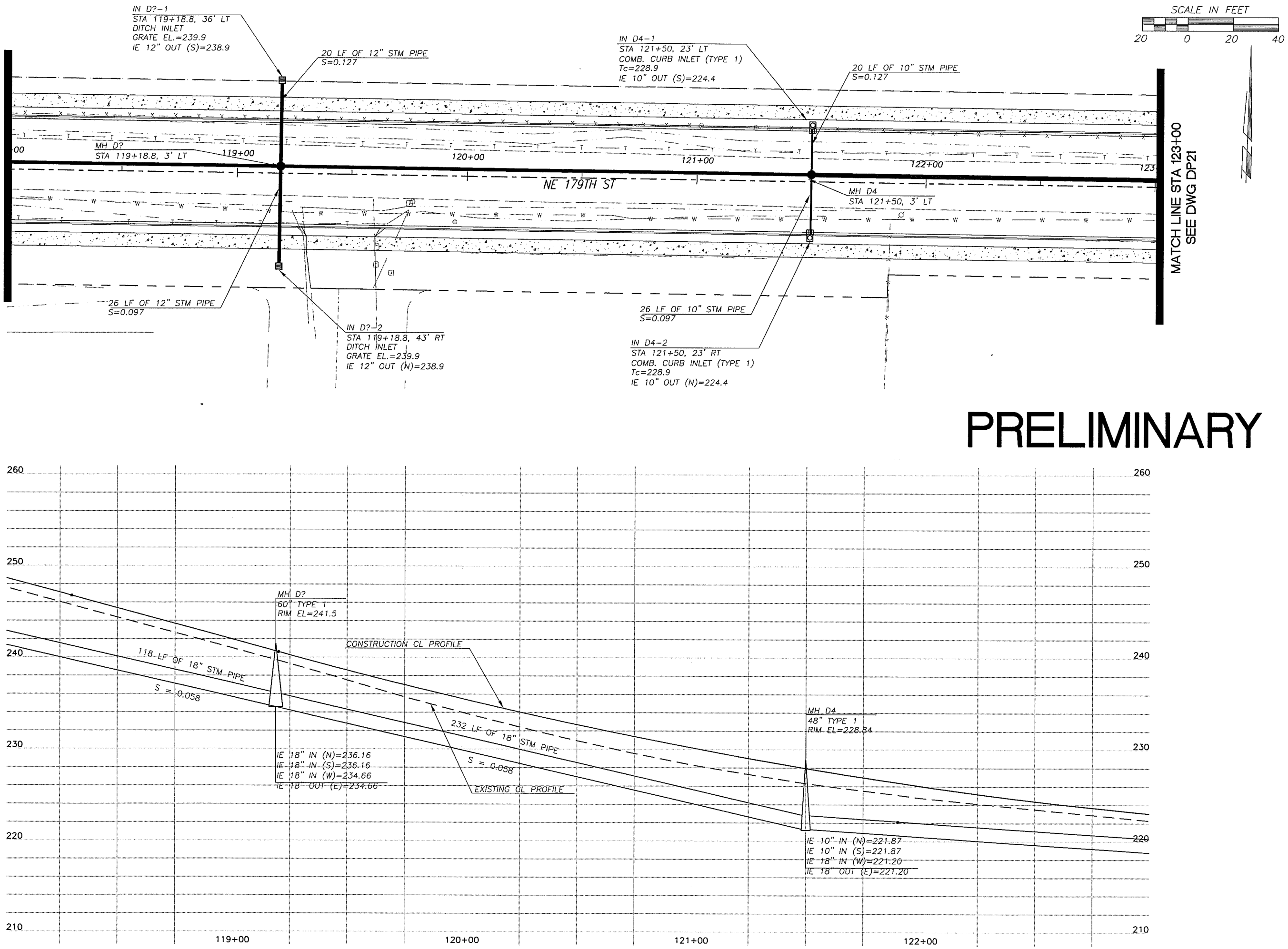

DESIGNED	JM
DRAWN	RK
CRP	381122
HOR.	20
VERT.	5
DATE	12/22/03
DWG:	DP20
SHEET	OF

CALL 48 HOURS BEFORE YOU DIG
1-800-553-4344
"It's the Law"
NORTHWEST UTILITIES NOTIFICATION CENTER

MILNE STATE OF WASHINGTON 31148 REGISTERED PROFESSIONAL ENGINEER
EXPIRES: JULY 7, 2005

DESIGN & ENGINEERING DIVISION
DESIGN SECTION

NE 179TH STREET (I-5 TO NE 50TH AVE)
DRAINAGE PLAN STA 118+00 TO STA 123+00

proud past, promising future
CLARK COUNTY
WASHINGTON

N:\CIPPROJECTS\381122-NE179th-East\DESIGN\Dwg\179thEDP20.dwg, 12/16/2003 4:28:34 PM, kerlinr

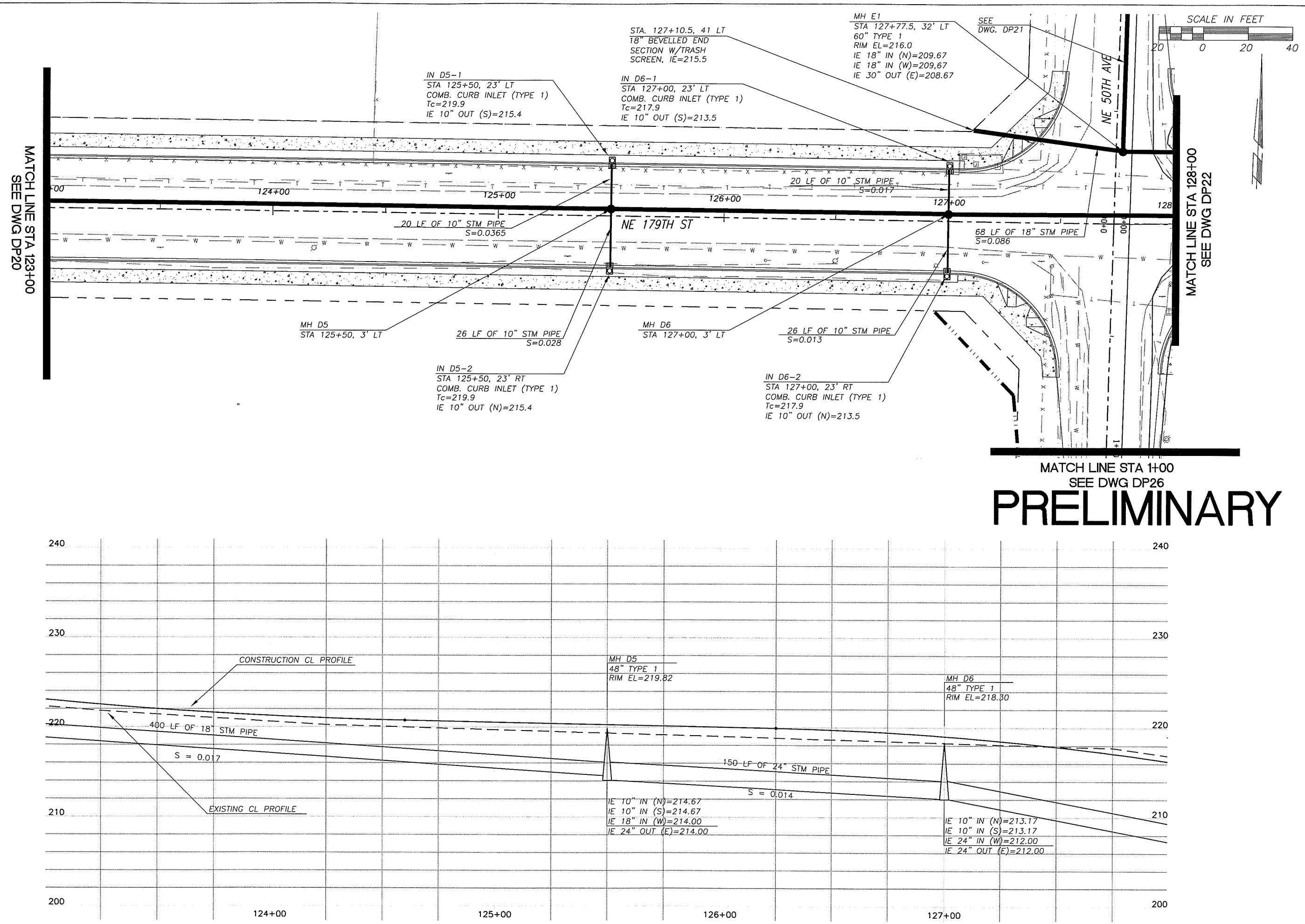

DESIGNED JM
DRAWN RK
CRP 381122
HOR. 20
VERT. 5
DATE 12/22/03
DWG: DP21
SHEET OF

CALL 48 HOURS BEFORE YOU DIG
1-800-553-4344
"It's the Law"
NORTHWEST UTILITIES NOTIFICATION CENTER

STATE OF WASHINGTON
MICHAEL J. MILNE
21148
REGISTERED PROFESSIONAL ENGINEER
EXPIRES JULY 27, 2003

DESIGN & ENGINEERING DIVISION
DESIGN SECTION

NE 179TH STREET (I-5 TO NE 50TH AVE)
DRAINAGE PLAN STA 123+00 TO STA 128+00

proud past, promising future
CLARK COUNTY
WASHINGTON

N:\CIP\PROJECTS\381122-NE179th-East\DESIGN\Dwg\179thEDP21.dwg, 12/16/2003 4:34:54 PM, kerlinr

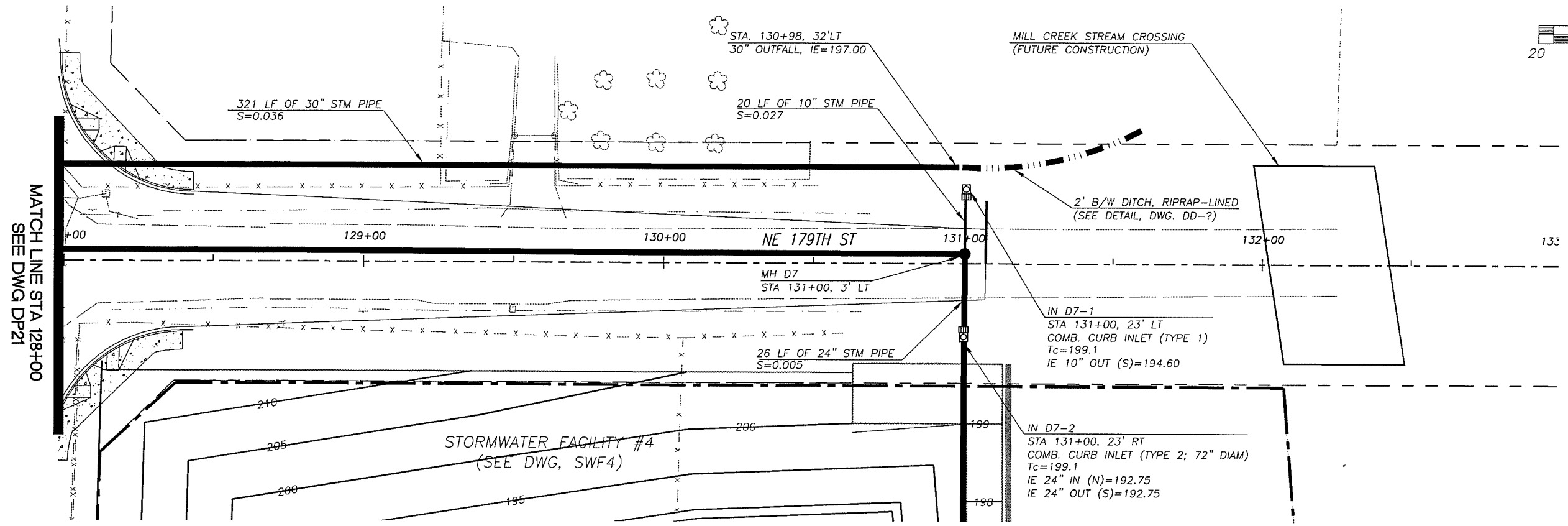

PRELIMINARY

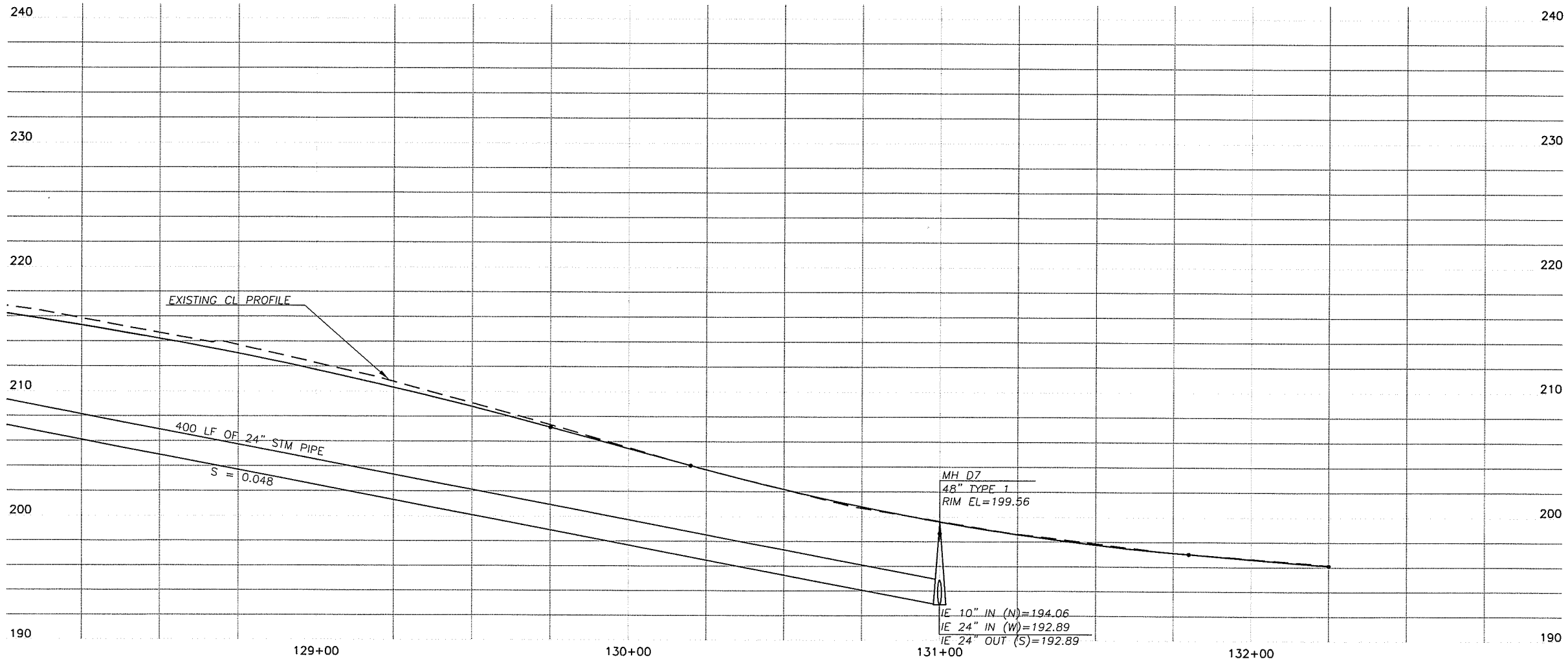

DESIGNED	JM
DRAWN	RK
CRP	381122
HOR.	20
VERT.	5
DATE	12/22/03
DWG:	DP22
SHEET X	OF X

CALL 48 HOURS BEFORE YOU DIG
1-800-553-4344
"It's the Law"
NORTHWEST UTILITIES NOTIFICATION CENTER

STATE OF WASHINGTON
JOHN M. LIE
STATE REGISTERED PROFESSIONAL ENGINEER
EXPIRES JANUARY 2, 2005

DESIGN & ENGINEERING DIVISION
DESIGN SECTION

NE 179TH STREET (I-5 TO NE 50TH AVE)
DRAINAGE PLAN STA 128+00 TO EOP

proud past, promising future
CLARK COUNTY
WASHINGTON

N:\CIP\PROJECTS\381122-NE179th-East\DESIGN\Dwg\179thEDP22.dwg, 12/17/2003 6:35:49 AM, kerlinr

PRELIMINARY

SCALE IN FEET

20 0 20 40

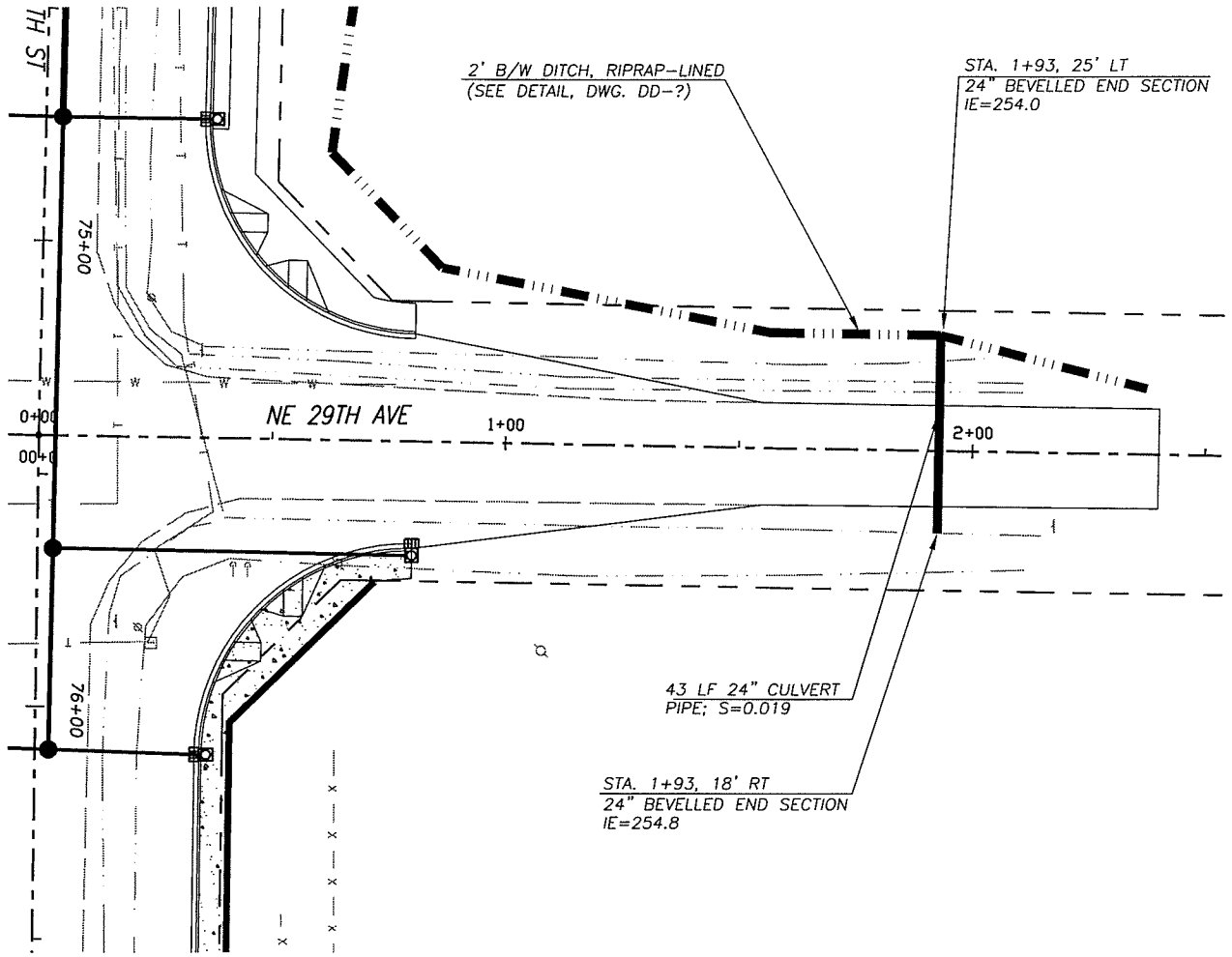

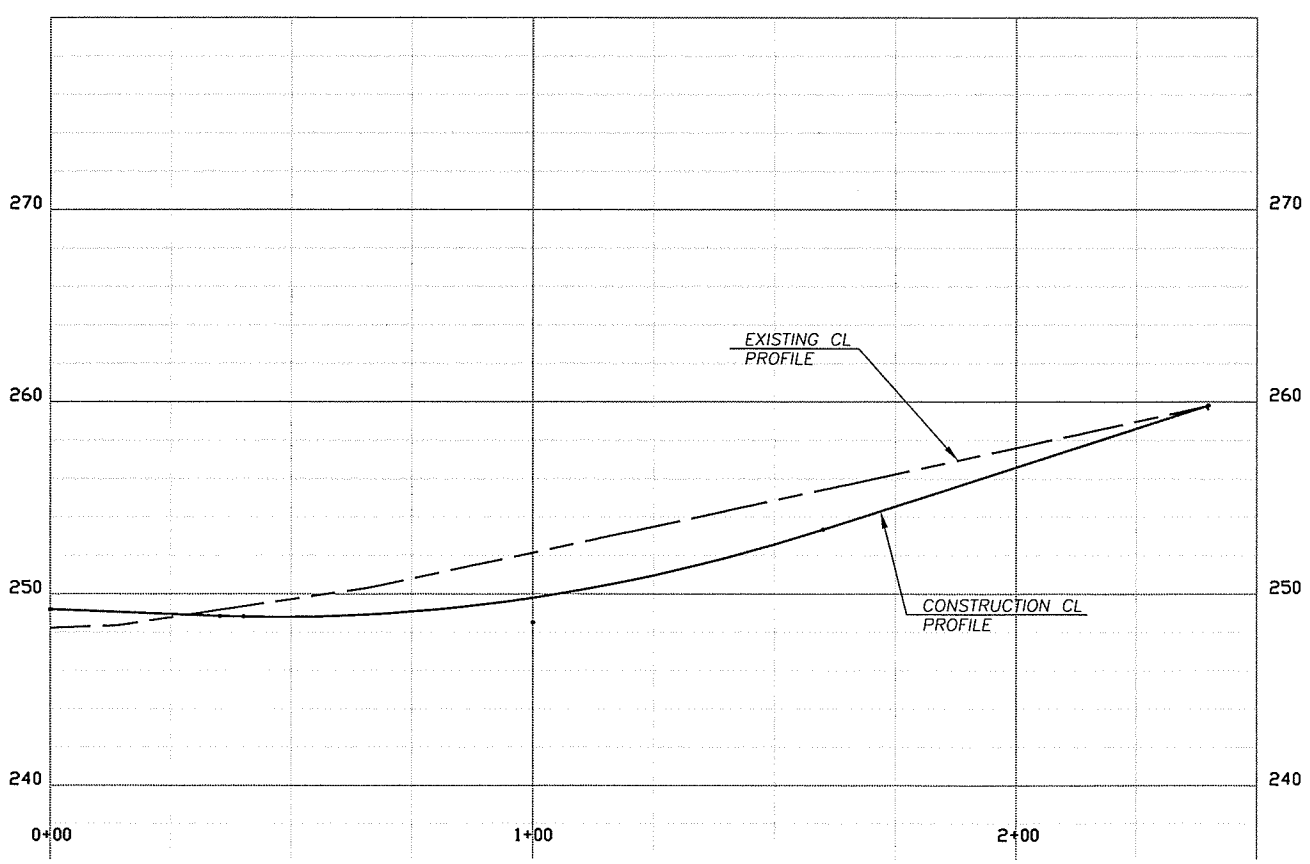

DESIGNED	JM
DRAWN	RK
CRP	381122
HOR.	20
VERT.	5
DATE	12/22/03
DWG:	DP23
SHEET X	OF X

CALL 48 HOURS BEFORE YOU DIG 1-800-553-4344 "It's the Law" NORTHWEST UTILITIES NOTIFICATION CENTER

STATE OF WASHINGTON MILLER 31148 REGISTERED PROFESSIONAL ENGINEER EXPIRES JULY 7, 2005

DESIGN & ENGINEERING DIVISION
DESIGN SECTION

NE 179TH STREET (I-5 TO NE 50TH AVE)
DRAINAGE PLAN NE 29TH AVE - NORTH

proud past, promising future

CLARK COUNTY WASHINGTON

N:\CIP\PROJECTS\381122-NE179th-East\DESIGN\Dwg\179thEDP23.dwg, 12/17/2003 6:32:39 AM, kerlinr

PRELIMINARY

SCALE IN FEET
20 0 20 40

STREAM CROSSING #4
(SEE DWG. SC4)

MHF1
STA. 3+XX.X, 3' LT
72" TYPE 3
RIM EL.=240.7
IE 10" IN (W)=236.42
IE 10" IN (E)=236.42
IE 18" IN (S)=235.75
IE 24" OUT (NW)=235.25

INF1-1
STA. 396.56, 23' LT
COMB. CURB INLET (TYPE 1)
Tc=240.5
IE 10" OUT (W)=236.52

INF2-1
STA. 3+96.56, 23' LT
COMB. CURB INLET (TYPE 1)
Tc=240.3
IE 10" OUT (W)=236.76

20 LF 10" STM PIPE
S=0.005

47 LF 18" STM PIPE
S=0.005

20 LF 10" STM PIPE
S=0.005

201 LF 18" STM PIPE
S=0.005

26 LF 10" STM PIPE
S=0.005

26 LF 10" STM PIPE
S=0.005

MATCH LINE STA 5+00
SEE DWG DP27

NE 179TH ST STORM SEWER
(SEE DWG. DP11)

TO STORMWATER FACILITY
#2 (SEE DWG, SWF2)

INF1-2
STA. 396.56, 23' RT
COMB. CURB INLET (TYPE 1)
Tc=240.5
IE 10" OUT (E)=236.55

INF2-2
STA. 3+96.56, 23' RT
COMB. CURB INLET (TYPE 1)
Tc=240.3
IE 10" OUT (E)=236.79

MHF2
STA. 3+96.56, 3' LT
48" TYPE 1
RIM EL.=240.5
IE 10" IN (W)=236.66
IE 10" IN (E)=236.66
IE 18" IN (S)=235.99
IE 18" OUT (N)=235.99

NE 179TH ST

0+00 1+00 2+00 3+00 4+00 5+

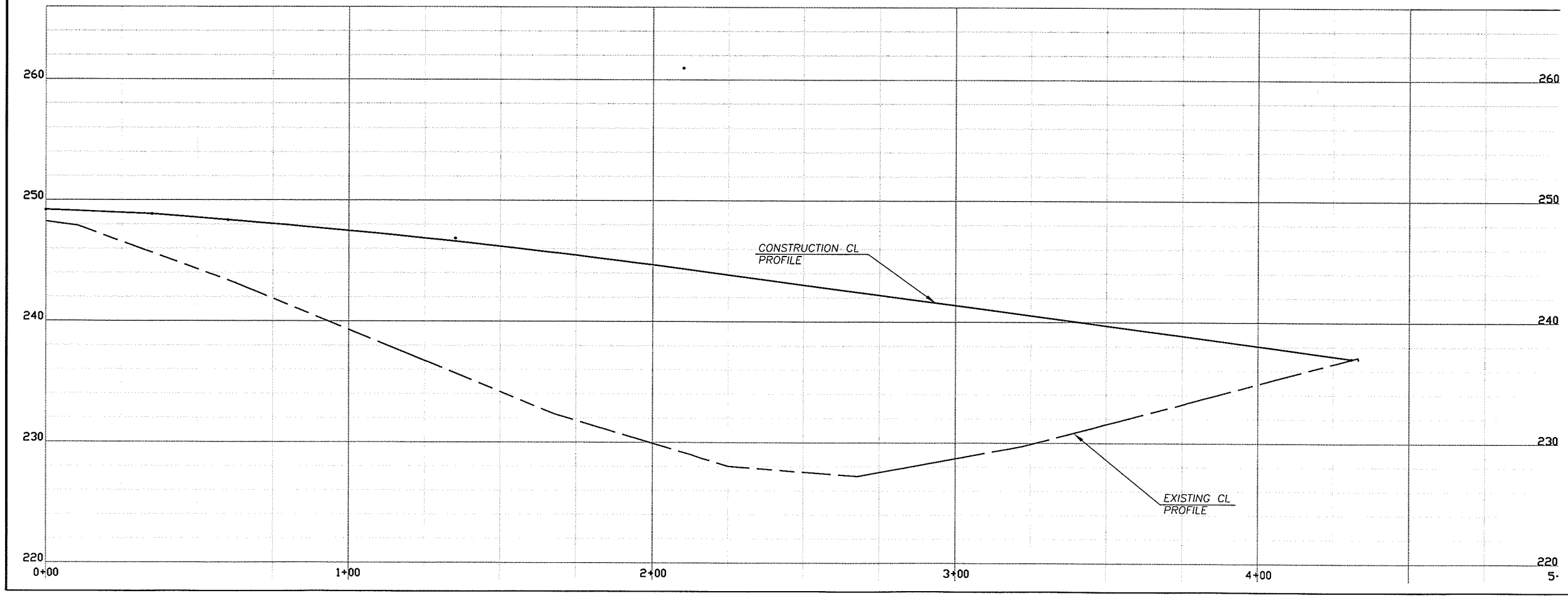

DESIGNED	JM
DRAWN	RK
CRP	381122
HOR.	20
VERT.	5
DATE	12/22/03
DWG:	DP24
SHEET X	OF X

CALL 48 HOURS BEFORE YOU DIG
1-800-553-4344
"It's the Law"
NORTHWEST UTILITIES NOTIFICATION CENTER

JOHN MILNE
STATE OF WASHINGTON
31148
REGISTERED PROFESSIONAL ENGINEER
EXPIRES JULY 7, 2005

DESIGN & ENGINEERING DIVISION
DESIGN SECTION

NE 179TH STREET (I-5 TO NE 50TH AVE); DRAINAGE PLAN NE 29TH AVE - SOUTH (STA. 0+00 TO STA. 5+00)

proud past, promising future
CLARK COUNTY
WASHINGTON

N:\CIP\PROJECTS\381122-NE179th-East\DESIGN\Dwg\179thEDP24.dwg, 12/17/2003 7:01:18 AM, kerlinr

PRELIMINARY

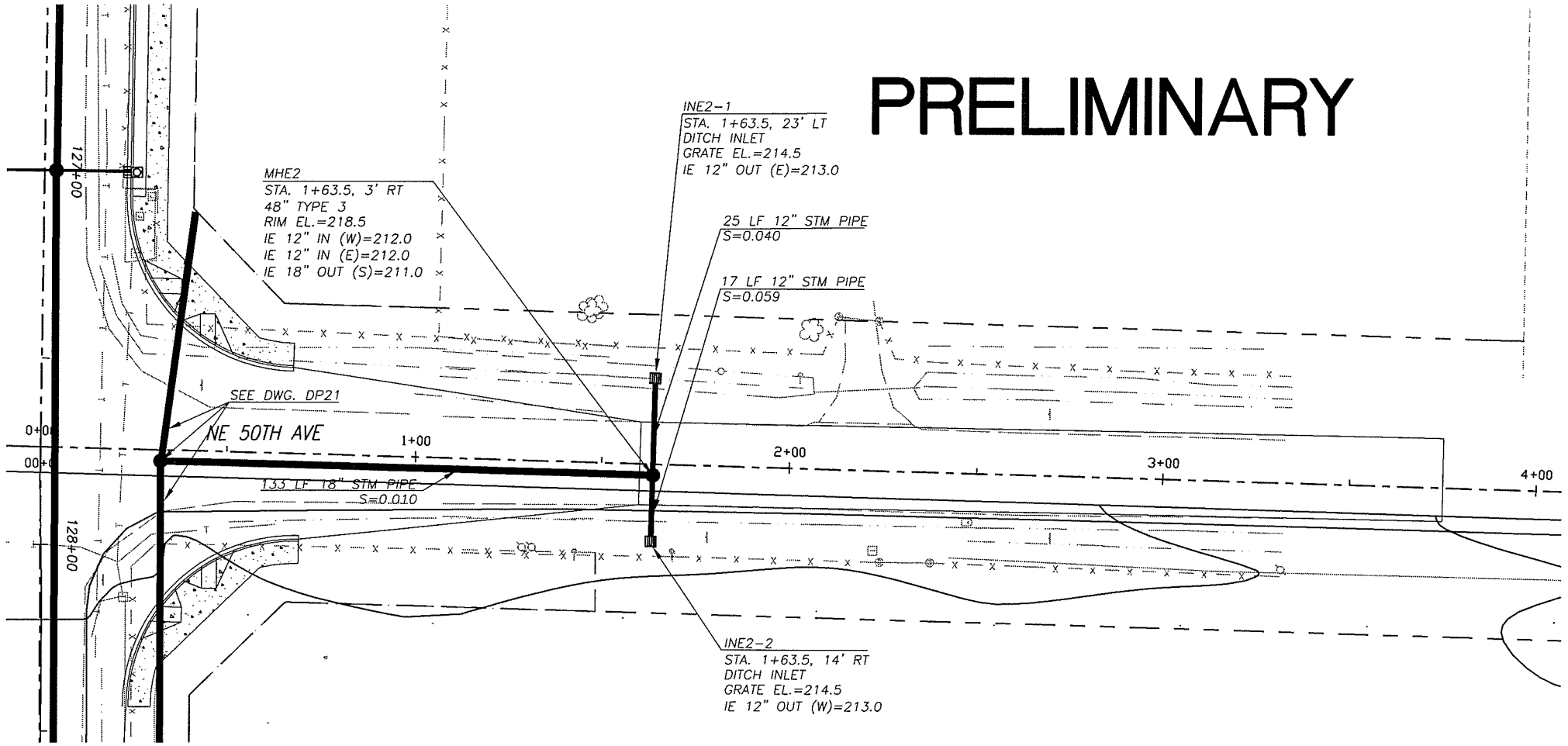

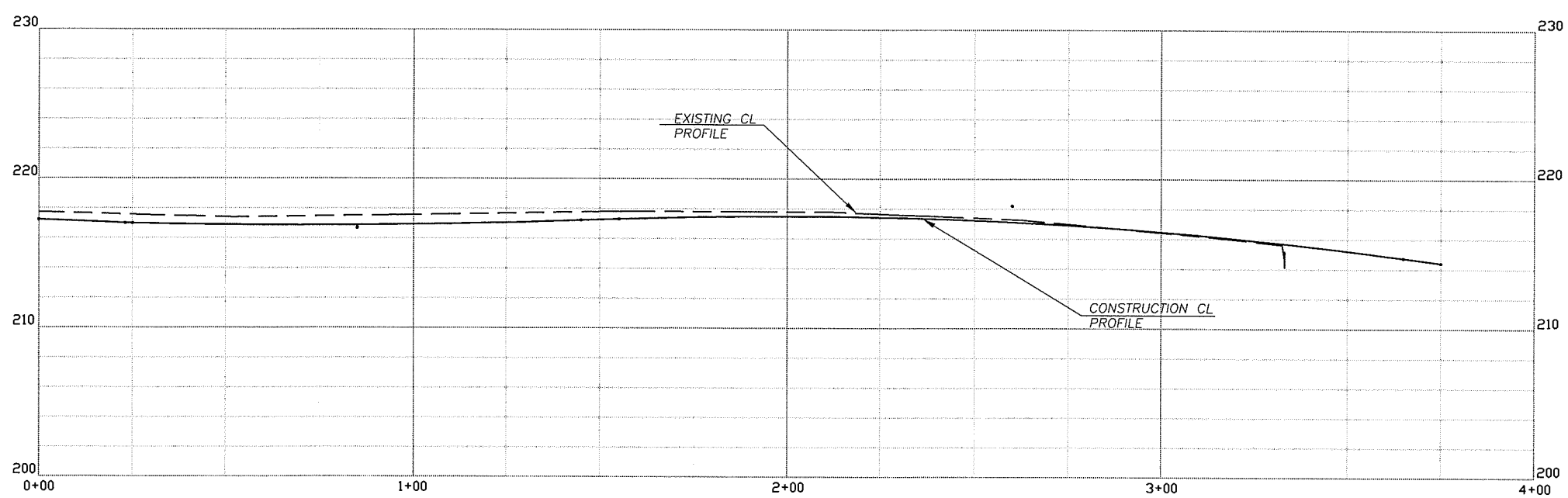

DESIGNED	JM
DRAWN	RK
CRP	381122
HOR.	20
VERT.	5
DATE	12/22/03
DWG:	DP25
SHEET X	OF X

CALL 48 HOURS BEFORE YOU DIG
1-800-553-4344
"It's the Law"
NORTHWEST UTILITIES NOTIFICATION CENTER

STATE OF WASHINGTON
MILAN
27148
REGISTERED
PROFESSIONAL ENGINEER
EXPIRES DEC. 7, 2005

DESIGN & ENGINEERING DIVISION
DESIGN SECTION

NE 179TH STREET (I-5 TO NE 50TH AVE)
DRAINAGE PLAN NE 50TH AVE - NORTH

proud past, promising future
CLARK COUNTY
WASHINGTON

N:\CIP\PROJECTS\381122-NE179th-East\DESIGN\Dwg\179thEDP25.dwg, 12/17/2003 7:39:51 AM, kerlinr

PRELIMINARY

SCALE IN FEET
20 0 20 40

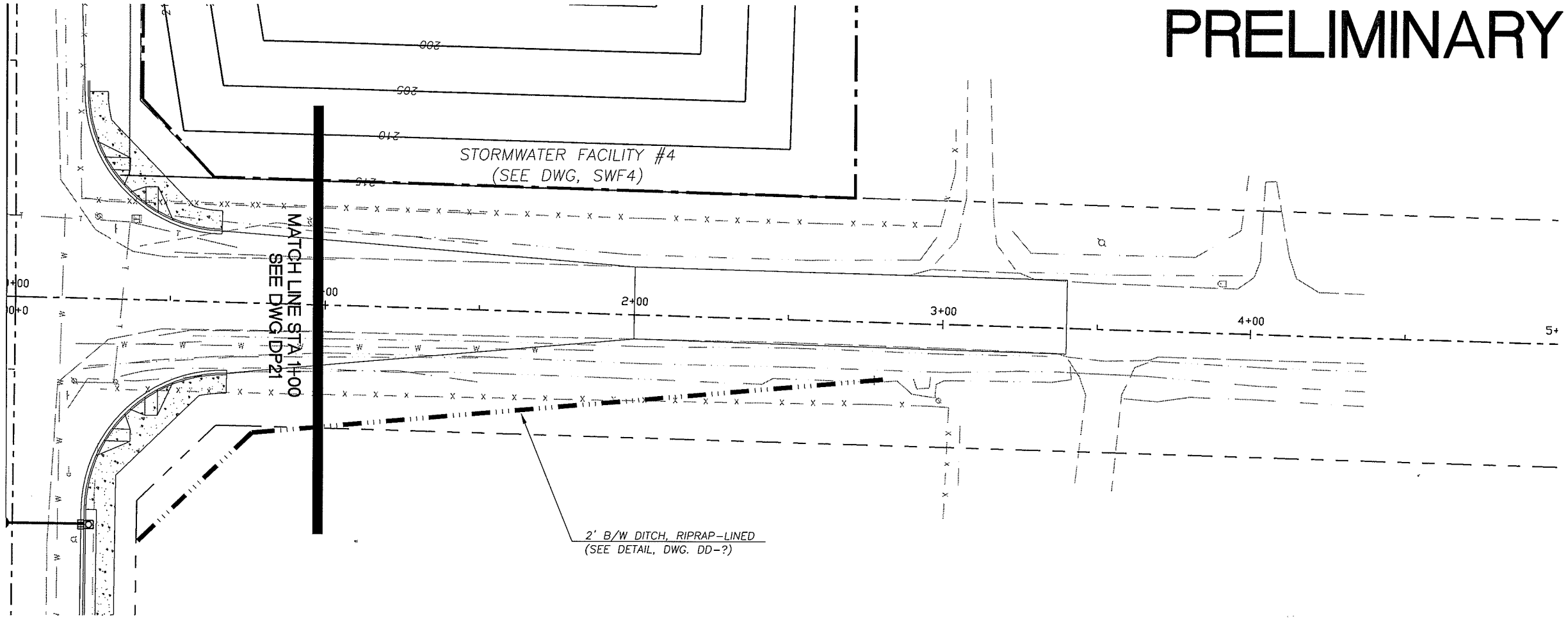

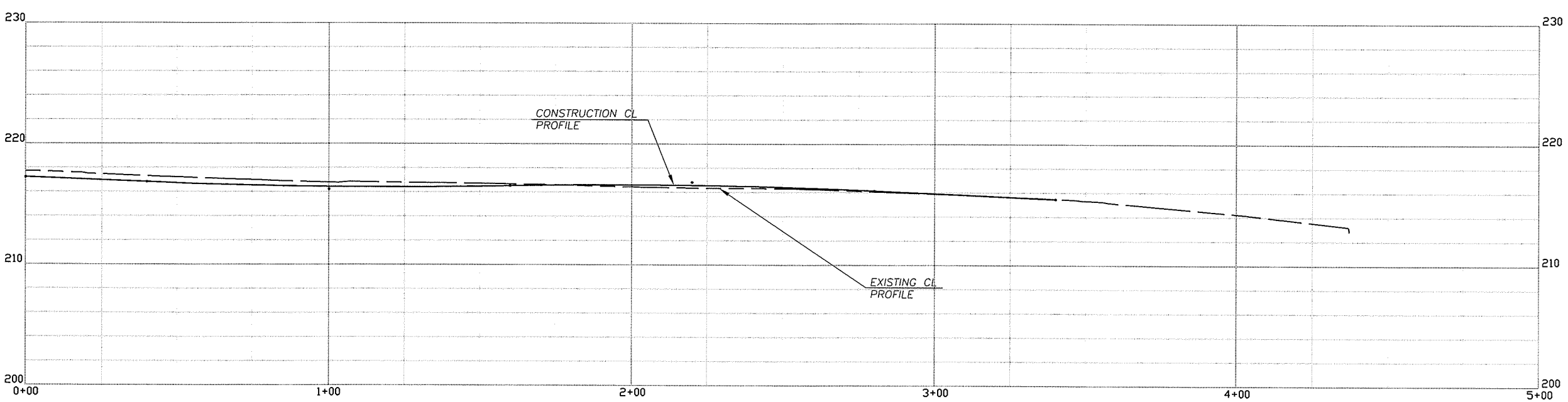

DESIGNED	JM
DRAWN	RK
CRP	381122
HOR.	20
VERT.	5
DATE	12/22/03
DWG:	DP26
SHEET X	OF X

CALL 48 HOURS BEFORE YOU DIG
1-800-553-4344
"It's the Law"
NORTHWEST UTILITIES NOTIFICATION CENTER

STATE OF WASHINGTON
MILAN BESTUL
37148
REGISTERED PROFESSIONAL ENGINEER
EXPIRES: JULY 7, 2005

DESIGN & ENGINEERING DIVISION
DESIGN SECTION

NE 179TH STREET (I-5 TO NE 50TH AVE)
DRAINAGE PLAN NE 50TH AVE - SOUTH

proud past, promising future
CLARK COUNTY
WASHINGTON

N:\CIP\PROJECTS\381122-NE179th-East\DESIGN\Dwg\179thEDP26.dwg, 12/17/2003 7:44:13 AM, kerlinr

PRELIMINARY

SCALE IN FEET

20 0 20 40

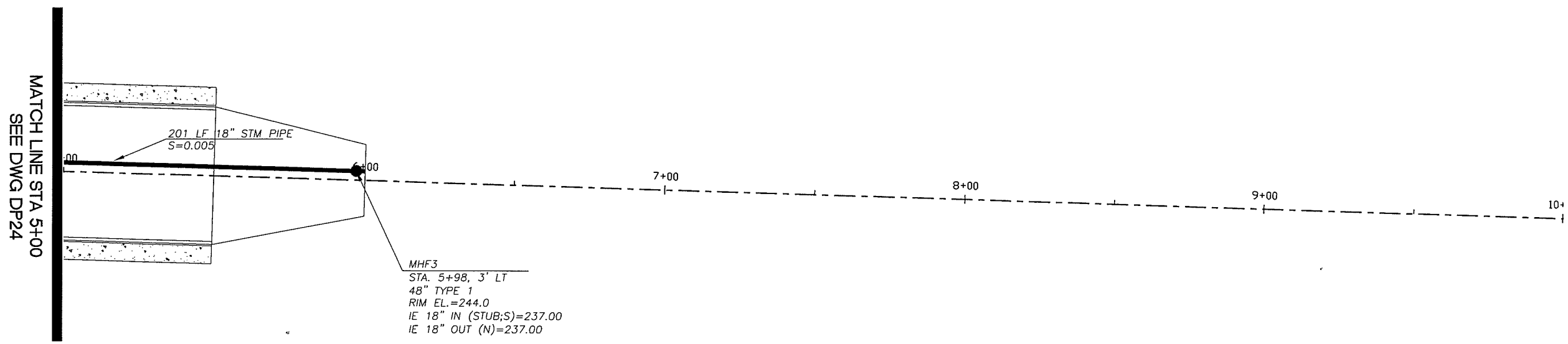

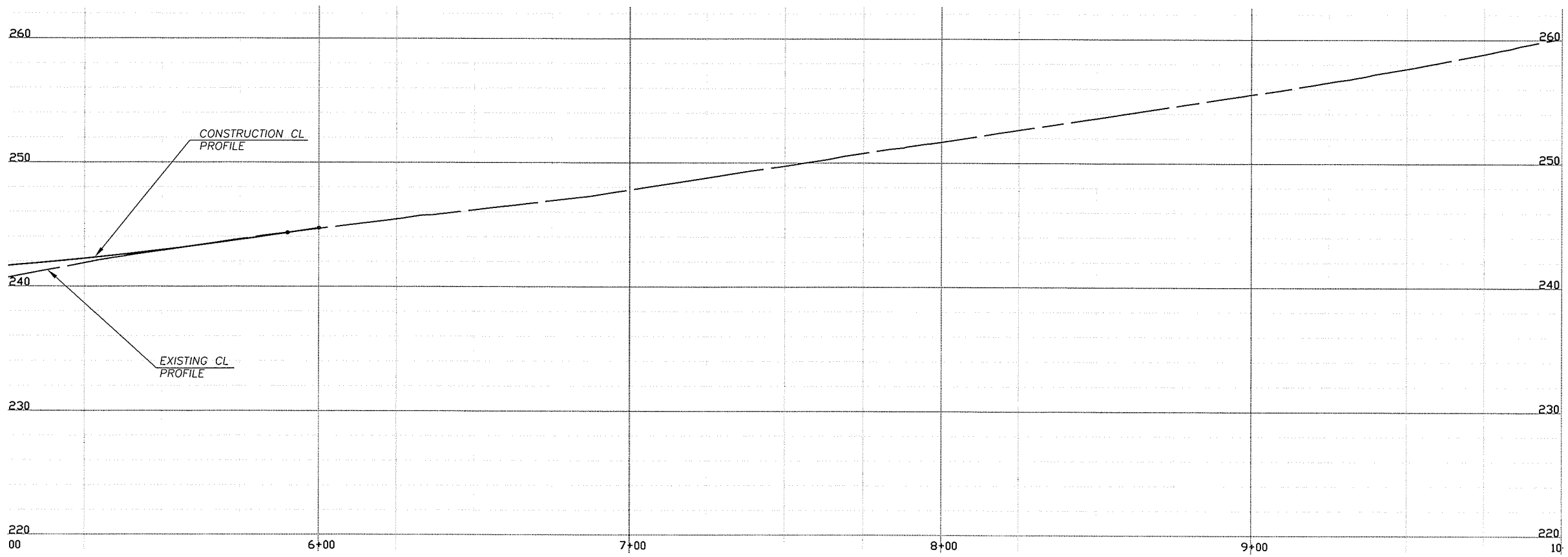

DESIGNED	JM
DRAWN	RK
CRP	381122
HOR.	20
VERT.	5
DATE	12/22/03
DWG:	DP27
SHEET X	OF X

CALL 48 HOURS BEFORE YOU DIG
1-800-553-4344
"It's the Law"
NORTHWEST UTILITIES NOTIFICATION CENTER

STATE OF WASHINGTON
JOHN MILLER
31148
REGISTERED PROFESSIONAL ENGINEER
EXPIRES JULY 7, 2005

DESIGN & ENGINEERING DIVISION
DESIGN SECTION

NE 179TH STREET (I-5 TO NE 50TH AVE); DRAINAGE
PLAN NE 29TH AVE - SOUTH (STA. 5+00 TO STA. 10+00)

proud past, promising future
CLARK COUNTY
WASHINGTON

N:\CIP\PROJECTS\381122-NE179th-East\DESIGN\Dwg\179thEDP27.dwg, 12/17/2003 8:28:13 AM, kerlinr

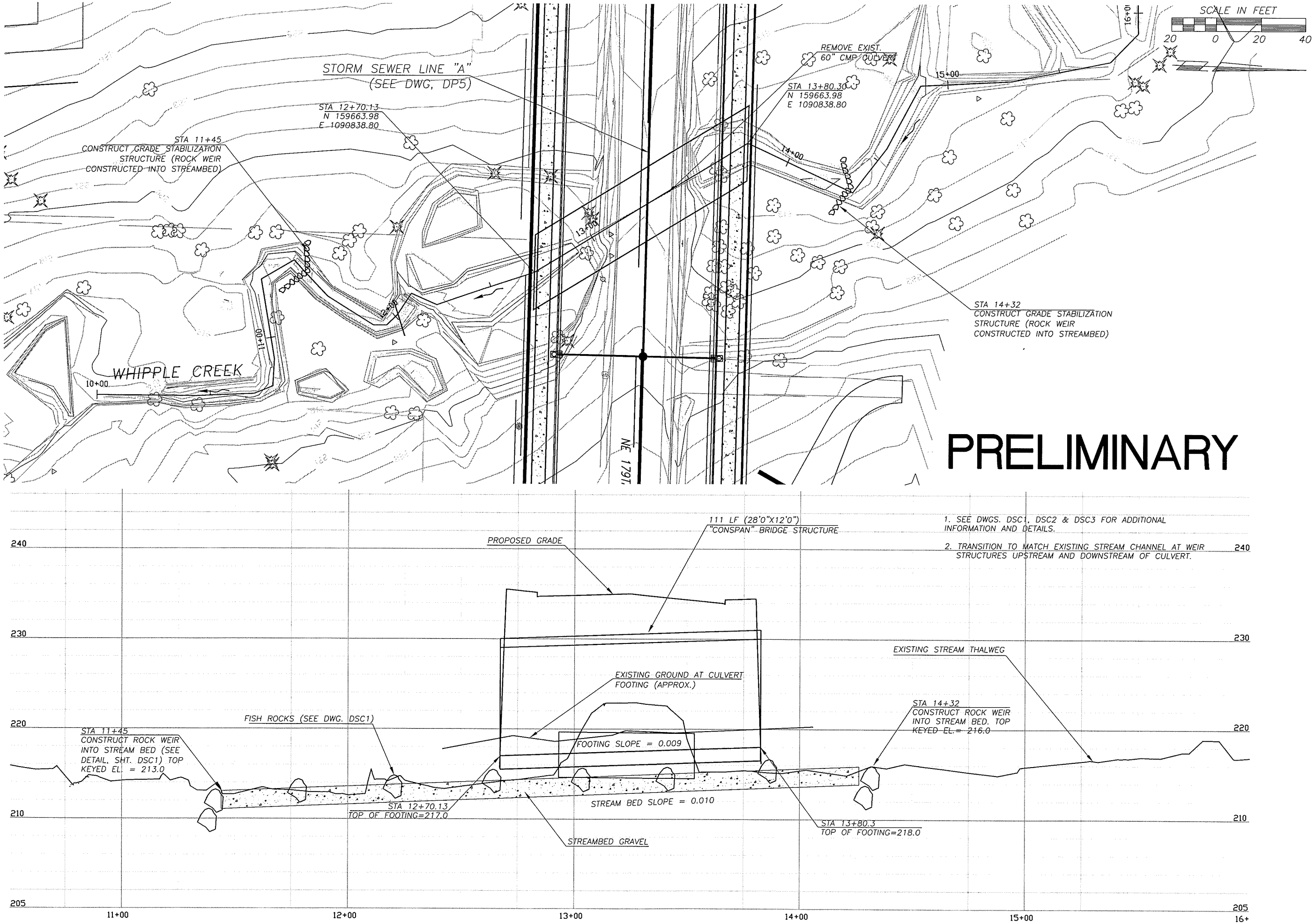

DESIGNED	JM
DRAWN	RK
CRP	381122
HOR.	20
VERT.	5
DATE	12/22/03
DWG:	SC1
SHEET	OF

CALL 48 HOURS BEFORE YOU DIG
1-800-553-4344
"It's the Law"
NORTHWEST UTILITIES NOTIFICATION CENTER

STATE OF WASHINGTON
JOHN MICHAEL HAMILTON
STATE REGISTERED PROFESSIONAL ENGINEER
EXPIRES JULY 7, 2005

DESIGN & ENGINEERING DIVISION
DESIGN SECTION

NE 179TH STREET (I-5 TO NE 50TH AVE)
STREAM CROSSING #1 (WHIPPLE CREEK; STA. 44+34)

proud past, promising future
CLARK COUNTY
WASHINGTON

N:\CIP\PROJECTS\381122-NE179th-East\DESIGN\Dwg\179thESC1.dwg, 12/16/2003 1:04:02 PM, kerinr

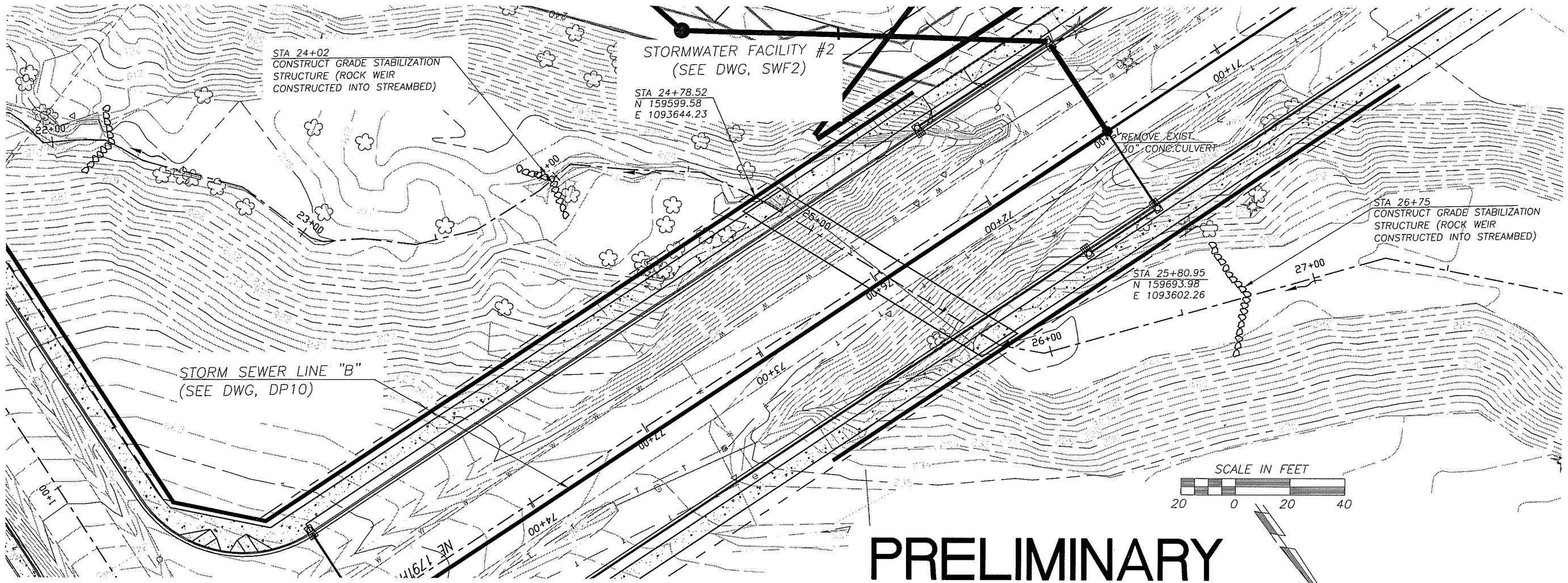

PRELIMINARY

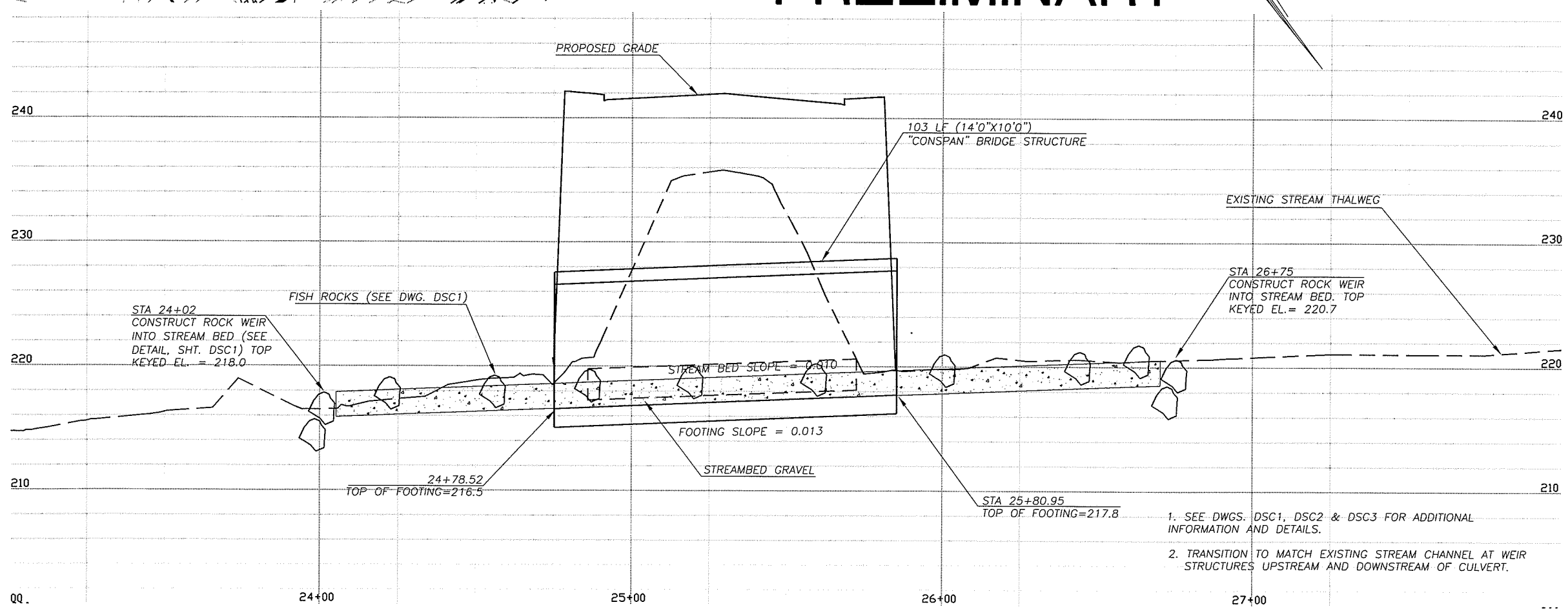

1. SEE DWGS. DSC1, DSC2 & DSC3 FOR ADDITIONAL INFORMATION AND DETAILS.

2. TRANSITION TO MATCH EXISTING STREAM CHANNEL AT WEIR STRUCTURES UPSTREAM AND DOWNSTREAM OF CULVERT.

DESIGNED	JM
DRAWN	JM
CRP	381122
HOR.	20
VERT.	5
DATE	12/22/03
DWG:	SC2
SHEET	OF

CALL 48 HOURS BEFORE YOU DIG 1-800-553-4344 "It's the Law" NORTHWEST UTILITIES NOTIFICATION CENTER

STATE OF WASHINGTON MICHAEL J. MINE 37148 REGISTERED PROFESSIONAL ENGINEER
EXPIRES JULY 7, 2005

DESIGN & ENGINEERING DIVISION
DESIGN SECTION

NE 179TH STREET (I-5 TO NE 50TH AVE)
STREAM CROSSING #2 (STA.72+46)

proud past, promising future
CLARK COUNTY WASHINGTON

N:\CIP\PROJECTS\381122-NE179th-East\DESIGN\Dwg\179thESC2.dwg, 12/16/2003 1:13:26 PM, kerlinr

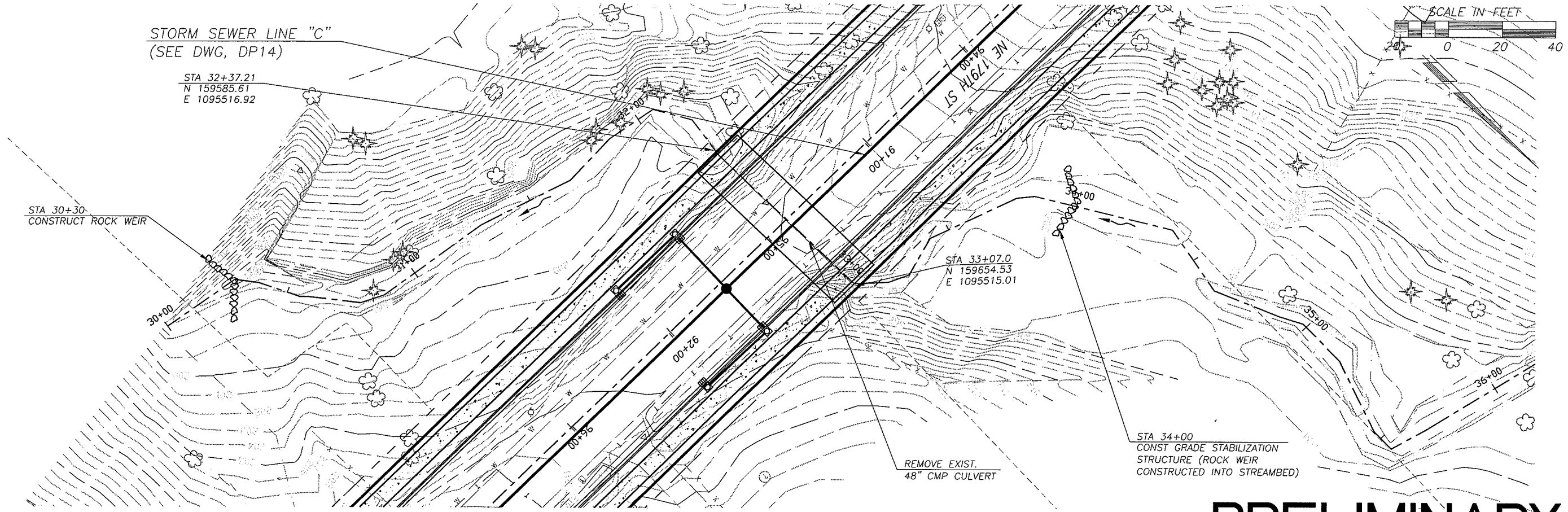

PRELIMINARY

1. SEE DWGS. DSC1, DSC2 & DSC3 FOR ADDITIONAL INFORMATION AND DETAILS.
2. TRANSITION TO MATCH EXISTING STREAM CHANNEL AT WEIR STRUCTURES UPSTREAM AND DOWNSTREAM OF CULVERT.

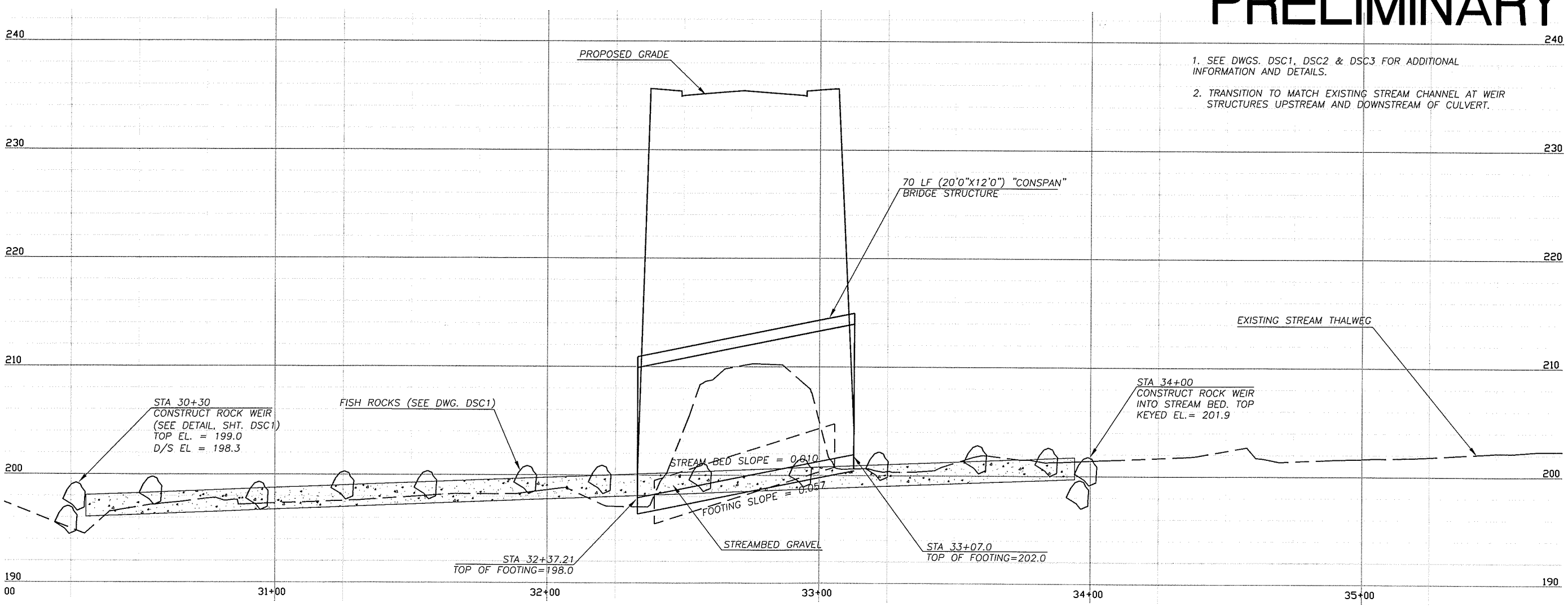

DESIGNED	JM
DRAWN	JM
CRP	381122
HOR.	20
VERT.	5
DATE	12/22/03
DWG:	SC3
SHEET	OF

CALL 48 HOURS BEFORE YOU DIG
1-800-553-4344
"It's the Law"
NORTHWEST UTILITIES NOTIFICATION CENTER

STATE OF WASHINGTON
MARK E. JOHNSON
31148
REGISTERED PROFESSIONAL ENGINEER
EXPIRES JULY 7, 2005

DESIGN & ENGINEERING DIVISION
DESIGN SECTION

NE 179TH STREET (I-5 TO NE 50TH AVE)
STREAM CROSSING #3 (STA. 91+40)

proud past, promising future
CLARK COUNTY
WASHINGTON

N:\CIP\PROJECTS\381122-NE179th-East\DESIGN\Dwg\179thESC3.dwg, 12/16/2003 1:21:08 PM, kerlinr

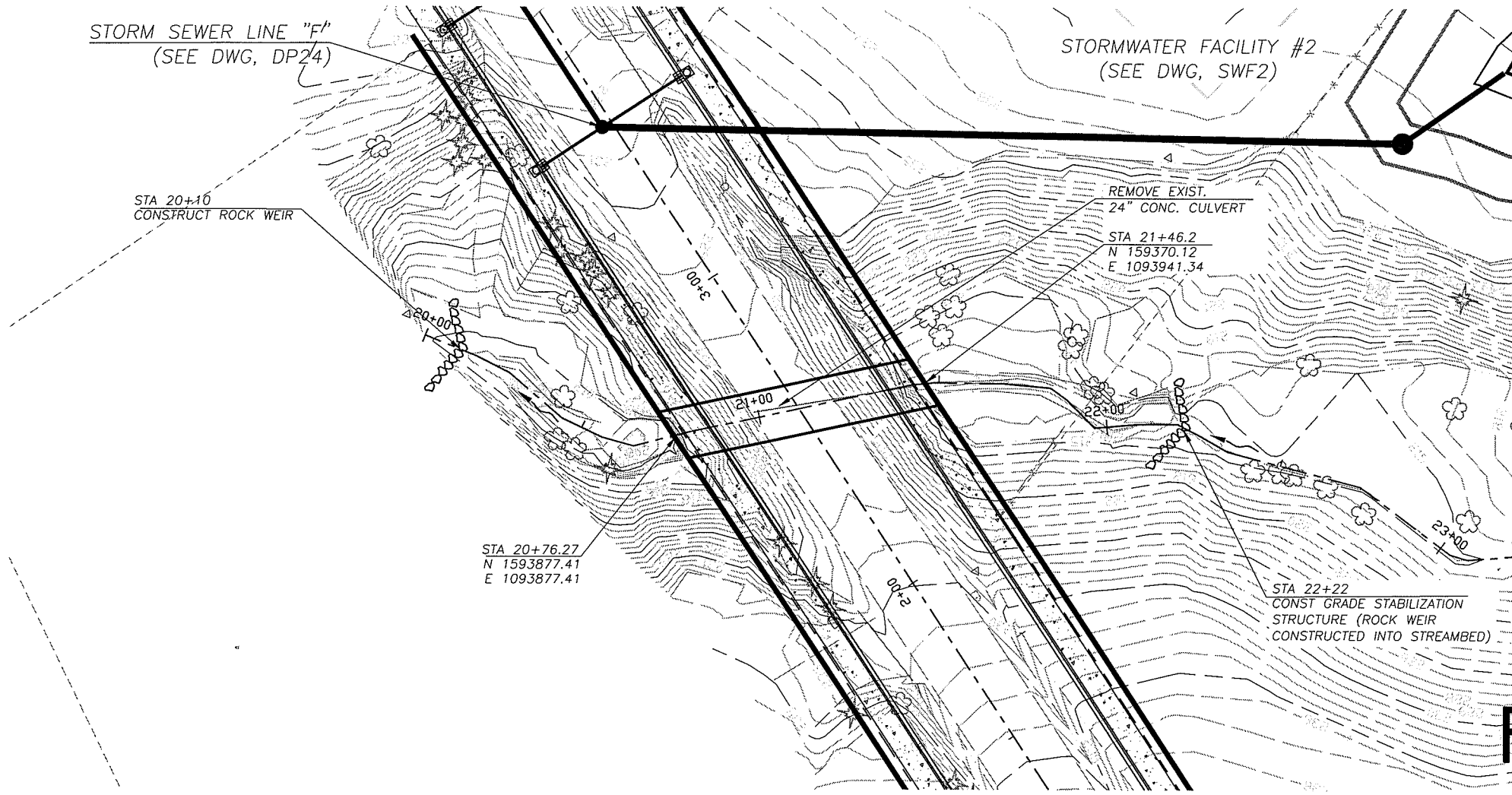

SCALE IN FEET

20 0 20 40

PRELIMINARY

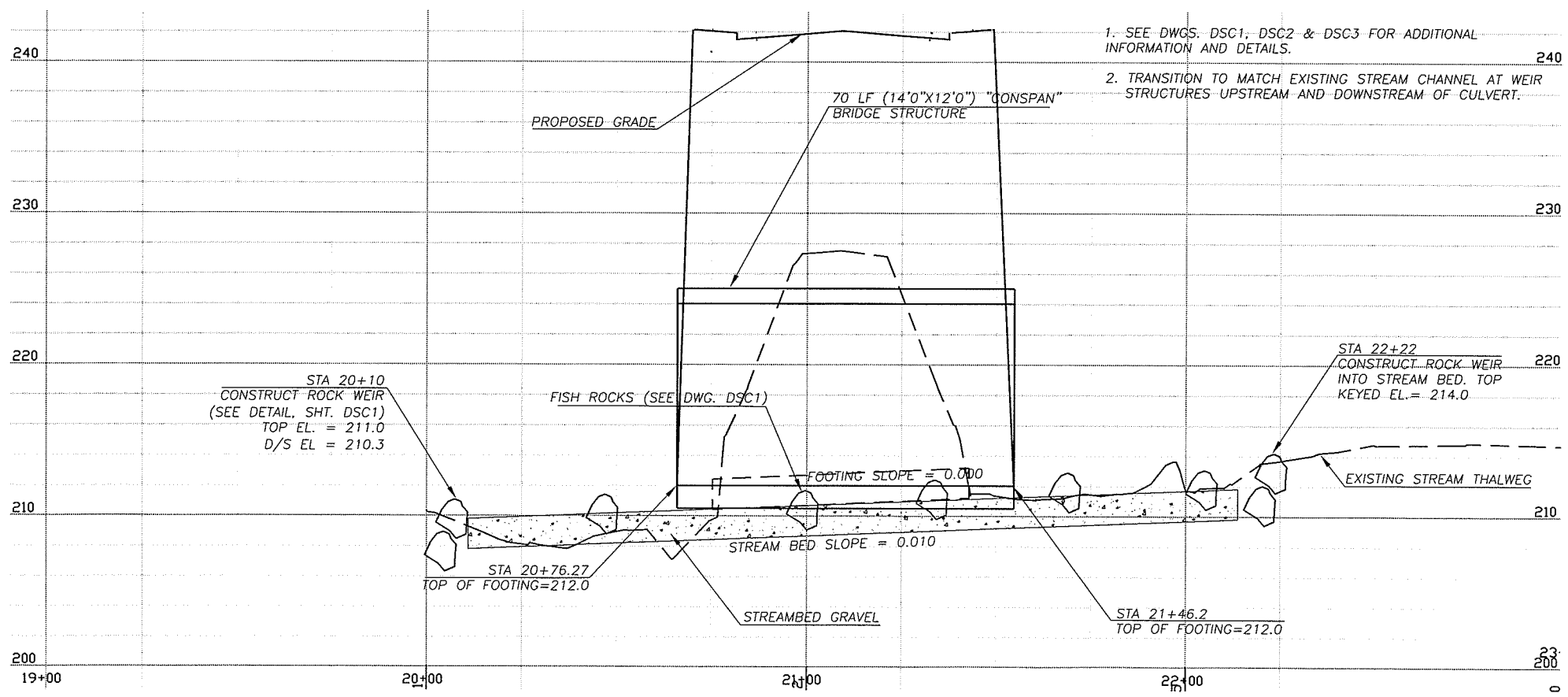

DESIGNED	JM
DRAWN	JM
CRP	381122
HOR.	20
VERT.	5
DATE	12/22/03
DWG:	SC4
SHEET X	OF X

CALL 48 HOURS BEFORE YOU DIG
1-800-553-4344
"It's the Law"
NORTHWEST UTILITIES NOTIFICATION CENTER

STATE OF WASHINGTON
MICHAEL J. MILLER
21149
PROFESSIONAL ENGINEER
EXPIRES JULY 7, 2005

DESIGN & ENGINEERING DIVISION
DESIGN SECTION

NE 179TH STREET (I-5 TO NE 50TH AVE)
STREAM CROSSING #4 STA. 2+57; 29TH AVE.)

proud past, promising future
CLARK COUNTY
WASHINGTON

N:\CIP\PROJECTS\381122-NE179th-East\DESIGN\Dwg\179thESC4.dwg, 12/16/2003 1:37:28 PM, kerlinr

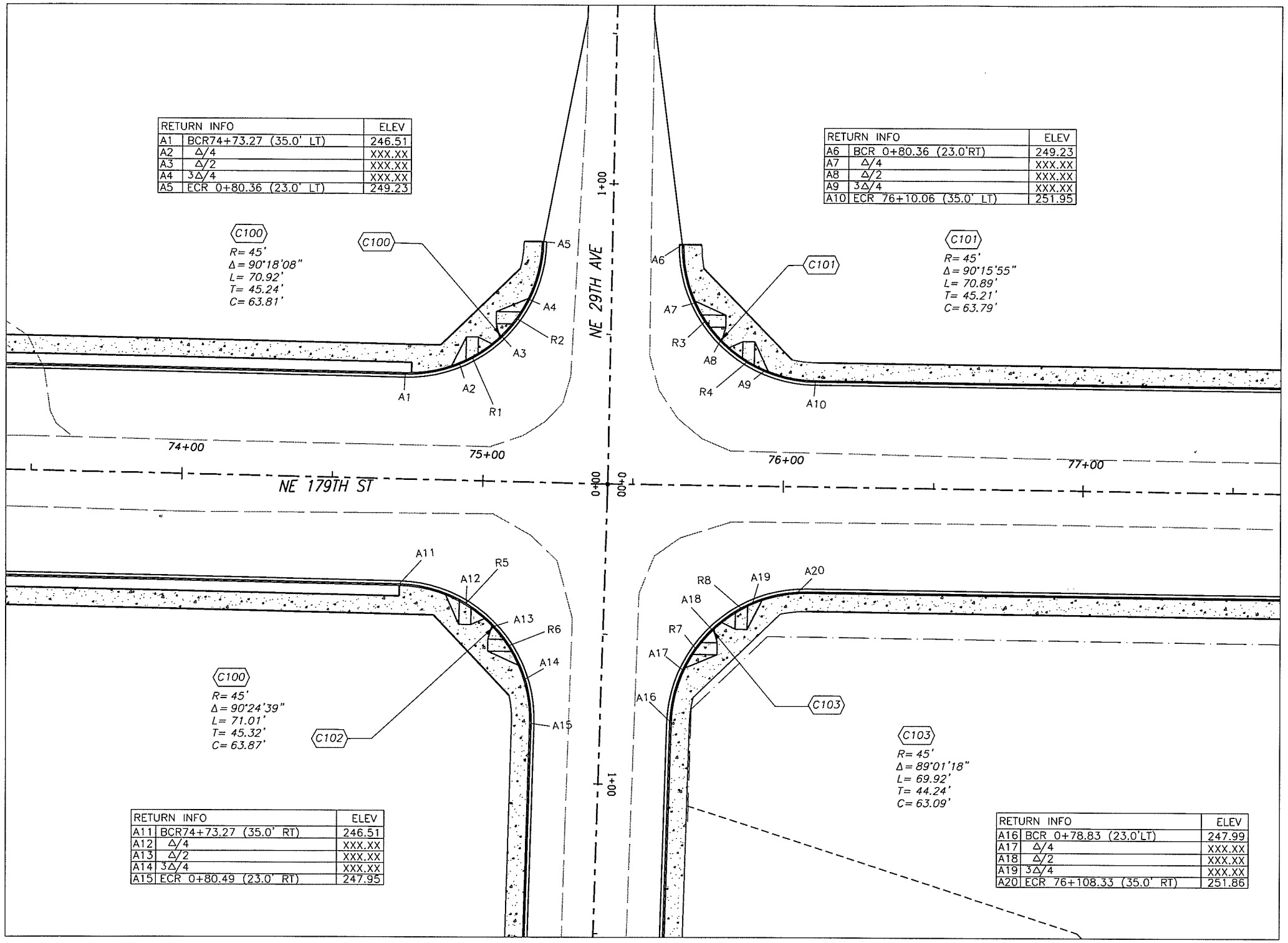

RETURN INFO		ELEV
A1	BCR74+73.27 (35.0' LT)	246.51
A2	Δ/4	XXX.XX
A3	Δ/2	XXX.XX
A4	3Δ/4	XXX.XX
A5	ECR 0+80.36 (23.0' LT)	249.23

RETURN INFO		ELEV
A6	BCR 0+80.36 (23.0'RT)	249.23
A7	Δ/4	XXX.XX
A8	Δ/2	XXX.XX
A9	3Δ/4	XXX.XX
A10	ECR 76+10.06 (35.0' LT)	251.95

RETURN INFO		ELEV
A11	BCR74+73.27 (35.0' RT)	246.51
A12	Δ/4	XXX.XX
A13	Δ/2	XXX.XX
A14	3Δ/4	XXX.XX
A15	ECR 0+80.49 (23.0' RT)	247.95

RETURN INFO		ELEV
A16	BCR 0+78.83 (23.0'LT)	247.99
A17	Δ/4	XXX.XX
A18	Δ/2	XXX.XX
A19	3Δ/4	XXX.XX
A20	ECR 76+108.33 (35.0' RT)	251.86

CL OF RAMPS @ FACE

#	STATION	OFFSET	TYPE
R1	74+95.1	40.7 LT	1
R2	0+54.8	30.9 LT	1
R3	0+55.1	30.7 RT	1
R4	75+87.8	40.9 LT	1
R5	74+95.1	40.7 RT	1
R6	0+54.9	40.0 RT	1
R7	0+53.7	30.7 LT	1
R8	75.86.6	40.6 RT	1

SCALE IN FEET

20 0 20 40

PRELIMINARY

DESIGNED MME
DRAWN RK
CRP 381122
HOR. 20
VERT. NA
DATE 12/22/03
DWG: 101
SHEET X OF X

CALL 48 HOURS BEFORE YOU DIG
1-800-553-4344
"It's the Law"
NORTHWEST UTILITIES NOTIFICATION CENTER

MICHAEL M. EDRICK
STATE OF WASHINGTON
20030
PROFESSIONAL ENGINEER
EXPIRES:MAY 26, 2005

DESIGN & ENGINEERING DIVISION
DESIGN SECTION

NE 179TH STREET (I-5 TO NE 50TH AVE)
INTERSECTION PLAN

proud past, promising future
CLARK COUNTY
WASHINGTON

N:\CIP\PROJECTS\381122-NE179th-East\DESIGN\Dwg\179thE101-2.dwg, 12/19/2003 1:58:33 PM, kerlinr

SCALE IN FEET

20 0 20 40

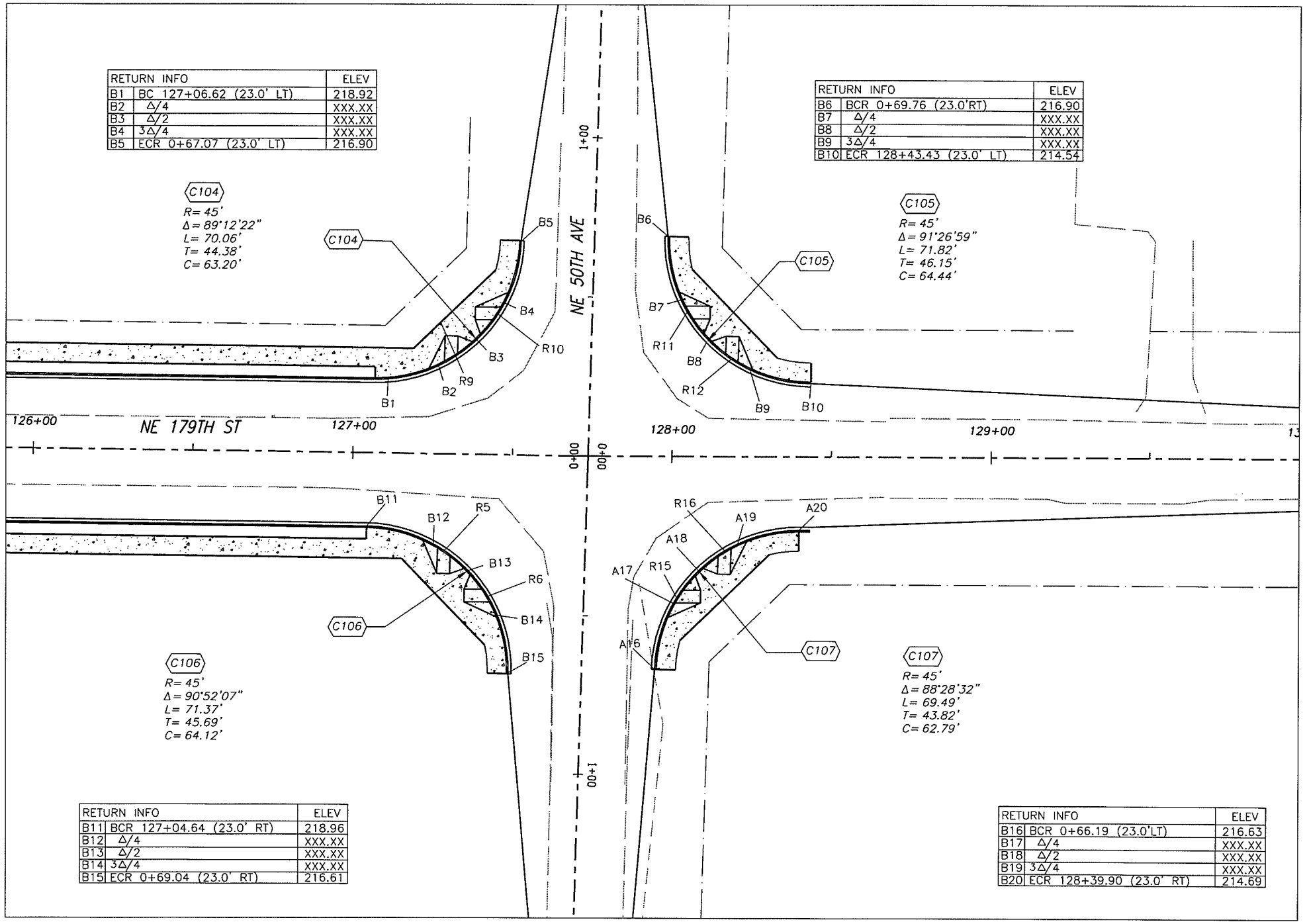

RETURN INFO		ELEV
B1	BC 127+06.62 (23.0' LT)	218.92
B2	Δ/4	XXX.XX
B3	Δ/2	XXX.XX
B4	3Δ/4	XXX.XX
B5	ECR 0+67.07 (23.0' LT)	216.90

RETURN INFO		ELEV
B6	BCR 0+69.76 (23.0'RT)	216.90
B7	Δ/4	XXX.XX
B8	Δ/2	XXX.XX
B9	3Δ/4	XXX.XX
B10	ECR 128+43.43 (23.0' LT)	214.54

RETURN INFO		ELEV
B11	BCR 127+04.64 (23.0' RT)	218.96
B12	Δ/4	XXX.XX
B13	Δ/2	XXX.XX
B14	3Δ/4	XXX.XX
B15	ECR 0+69.04 (23.0' RT)	216.61

RETURN INFO		ELEV
B16	BCR 0+66.19 (23.0'LT)	216.63
B17	Δ/4	XXX.XX
B18	Δ/2	XXX.XX
B19	3Δ/4	XXX.XX
B20	ECR 128+39.90 (23.0' RT)	214.69

CL OF RAMPS @ FACE

#	STATION	OFFSET	TYPE
R9	127+30.4	37.1 LT	1
R10	0+43.7	29.5 LT	1
R11	0+46.2	29.7 RT	1
R12	128+18.8	37.8 LT	1
R13	127+28.9	30.1 RT	1
R14	0+44.9	30.0 RT	1
R15	0+43.4	36.5 LT	1
R16	128+16.4	36.8 RT	1

PRELIMINARY

DESIGNED MME
DRAWN RK
CRP 381122
HOR. 20
VERT. NA
DATE 12/22/03
DWG: 102
SHEET X OF X

CALL 48 HOURS BEFORE YOU DIG 1-800-553-4344 "It's the Law" NORTHWEST UTILITIES NOTIFICATION CENTER

STATE OF WASHINGTON MICHAEL M. EMBLICK 37263 REGISTERED PROFESSIONAL ENGINEER EXPIRES JANUARY 26, 2005

DESIGN & ENGINEERING DIVISION
DESIGN SECTION

NE 179TH STREET (I-5 TO NE 50TH AVE)
INTERSECTION PLAN

proud past, promising future

CLARK COUNTY WASHINGTON

N:\CIP\PROJECTS\381122-NE179th-East\DESIGN\Dwg\179hE101-2.dwg, 12/18/2003 12:50:32 PM, kerlinr

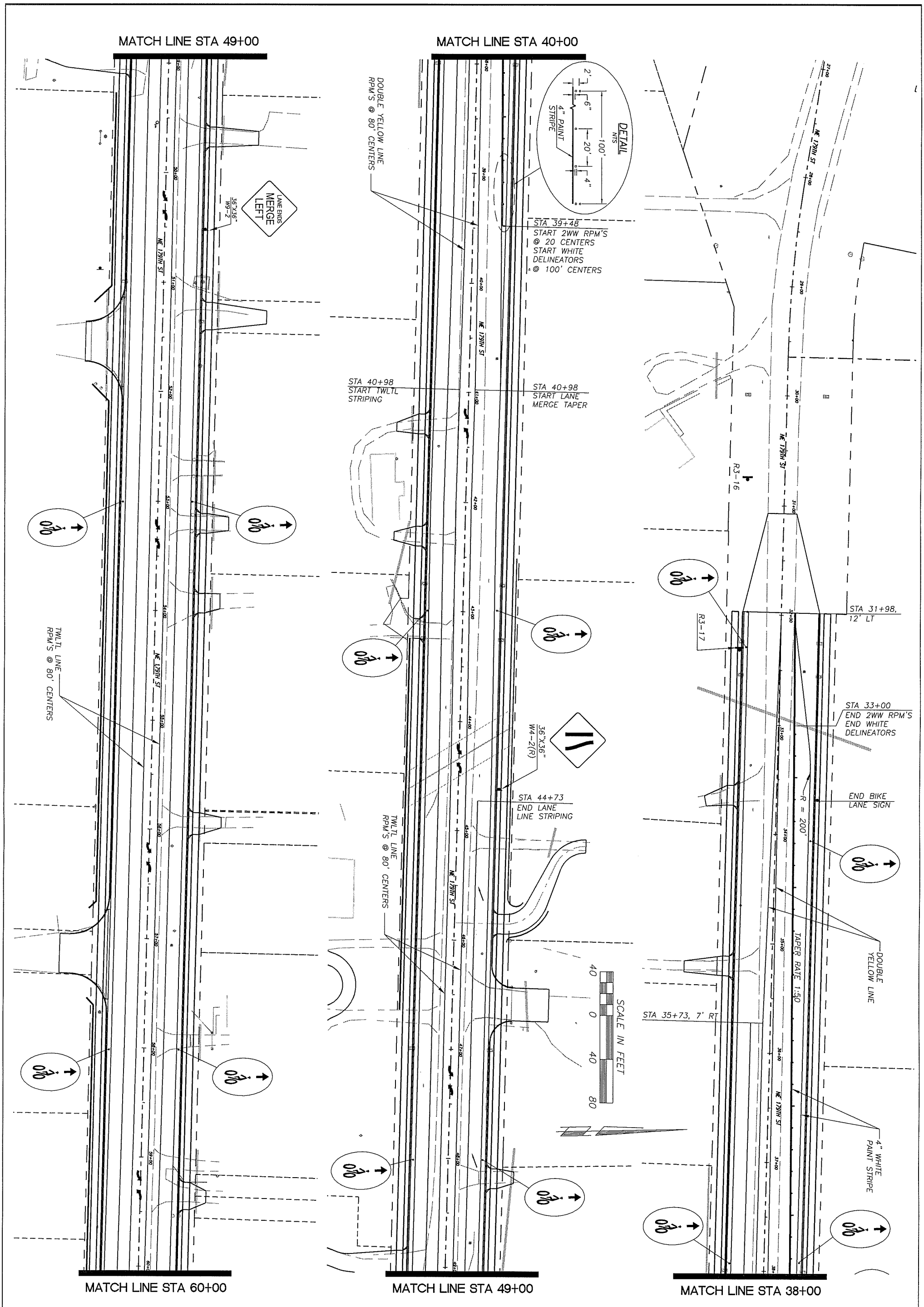

CLARK COUNTY
WASHINGTON
proud past, promising future

DESIGN & ENGINEERING DIVISION
DESIGN SECTION

NW 179TH STREET
SIGNING & STRIPING PLAN

EJAZ KHAN
STATE OF WASHINGTON
35938
REGISTERED
PROFESSIONAL ENGINEER
EXPIRES: JAN. 01, 2004

CALL 48 HOURS BEFORE YOU DIG
1-800-553-4344
"It's the Law"
NORTHWEST UTILITIES NOTIFICATION CENTER

DESIGNED	EK
DRAWN	
CRP	380122
HOR.	1"=40'
VERT.	NA
DATE	12/4/03
DWG:	179STSS
SHEET	SS1 OF

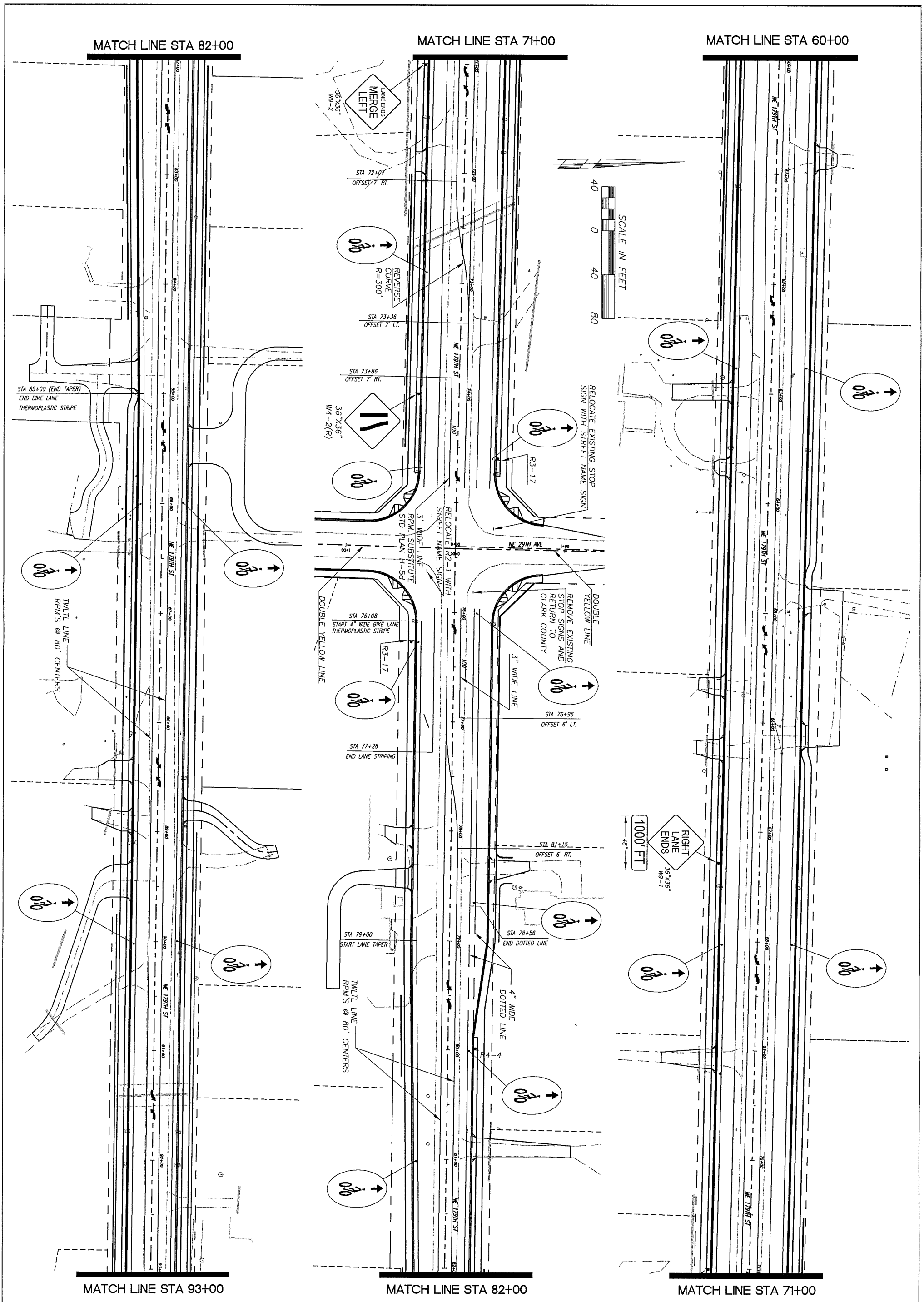

proud past, promising future

CLARK COUNTY
WASHINGTON

DESIGN & ENGINEERING DIVISION
DESIGN SECTION

NW 179TH STREET
SIGNING & STRIPING PLAN

EJAZ KHAN
STATE OF WASHINGTON
35938
REGISTERED
PROFESSIONAL ENGINEER
EXPIRES: JAN. 01, 2004

CALL 48 HOURS BEFORE YOU DIG
1-800-553-4344
"It's the Law"
NORTHWEST UTILITIES NOTIFICATION CENTER

DESIGNED	EK
DRAWN	
CRP	380122
HOR.	1"=40'
VERT.	NA
DATE	12/4/03
DWG:	179STSS
SHEET	SS2 OF

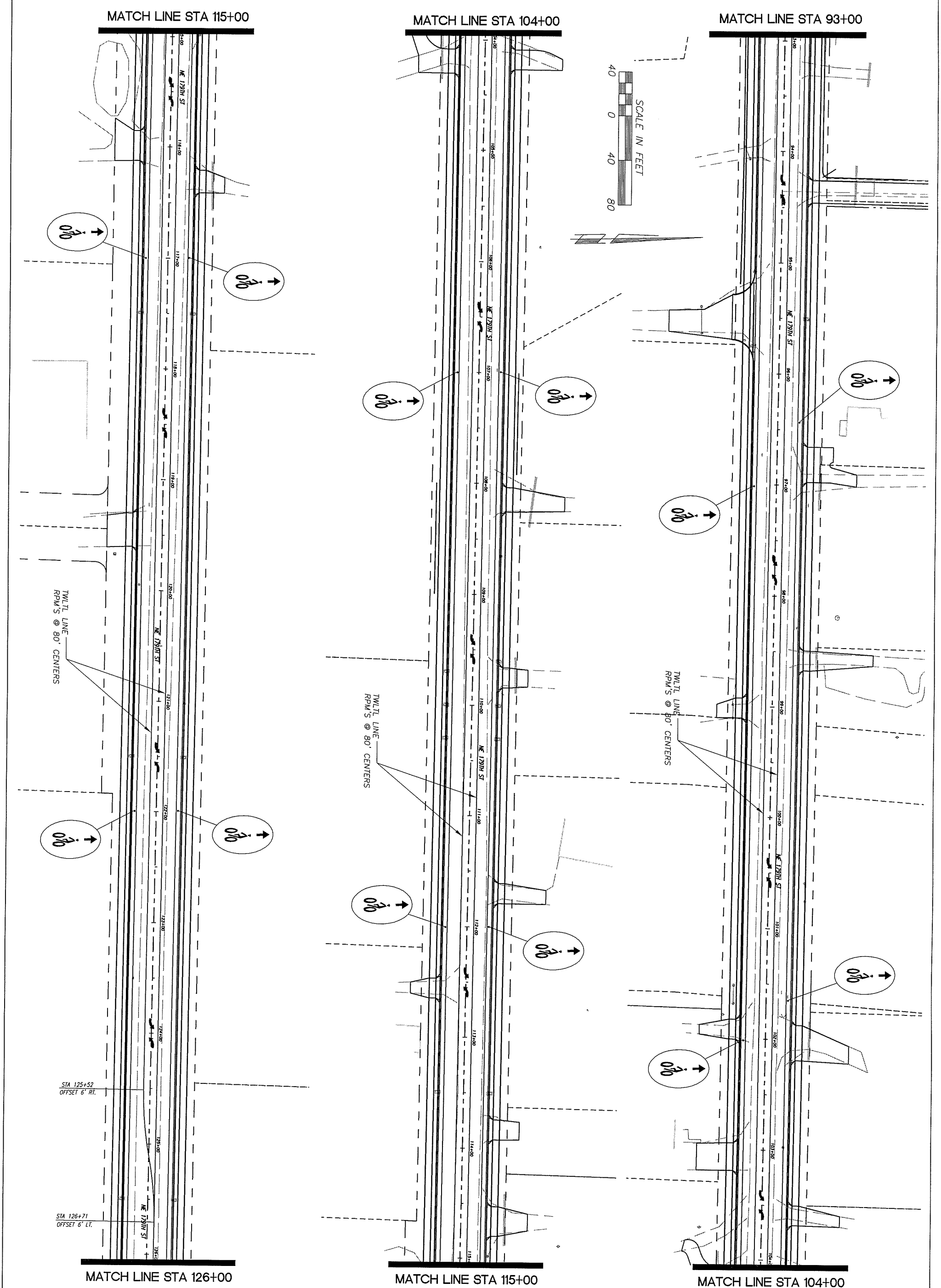

proud past, promising future

CLARK COUNTY
WASHINGTON

DESIGN & ENGINEERING DIVISION
DESIGN SECTION

NW 179TH STREET
SIGNING & STRIPING PLAN

EJAZ KHAN
STATE OF WASHINGTON
35938
REGISTERED
PROFESSIONAL ENGINEER
EXPIRES: JAN. 01, 2004

CALL 48 HOURS BEFORE YOU DIG
1-800-553-4344
"It's the Law"
NORTHWEST UTILITIES NOTIFICATION CENTER

DESIGNED	EK
DRAWN	
CRP	380122
HOR.	1"=40'
VERT.	NA
DATE	12/4/03
DWG:	179STSS
SHEET	SS3 OF

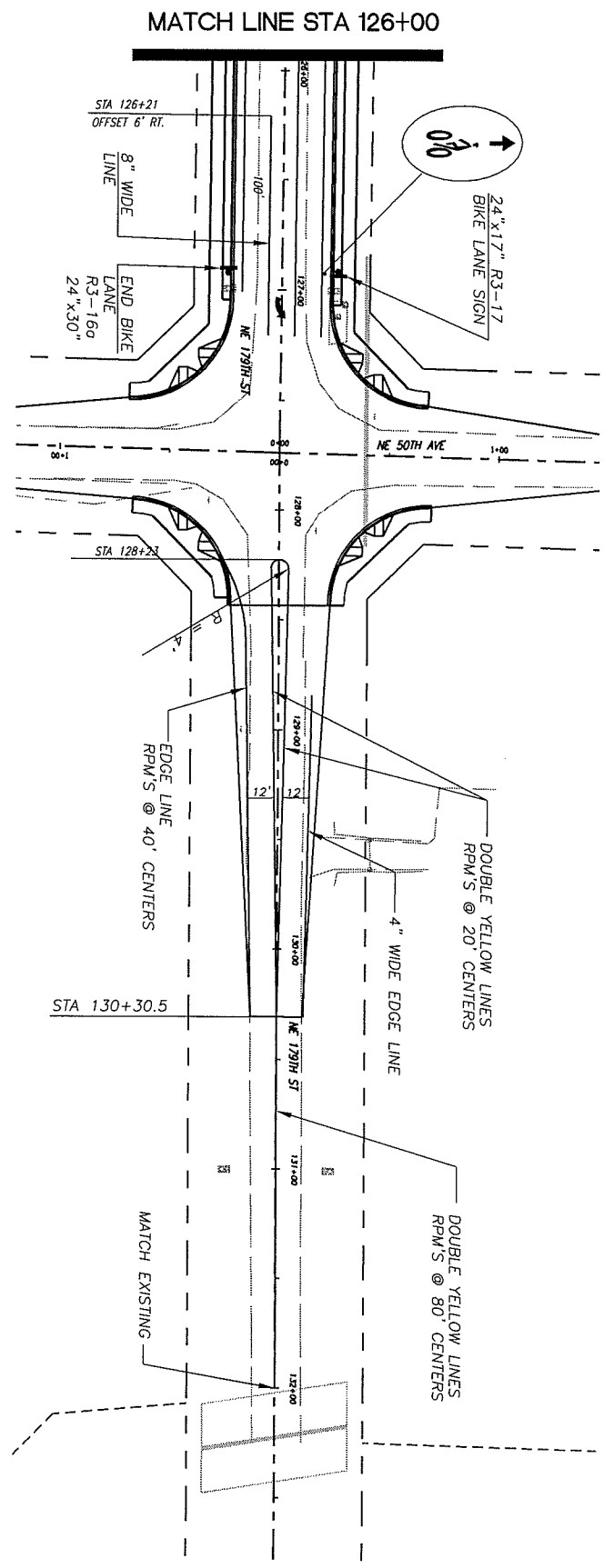

CLARK COUNTY
WASHINGTON
proud past, promising future

DESIGN & ENGINEERING DIVISION
DESIGN SECTION

NW 179TH STREET
SIGNING & STRIPING PLAN

EJAZ KHAN
STATE OF WASHINGTON
35938
REGISTERED
PROFESSIONAL ENGINEER
EXPIRES:JAN. 01, 2004

CALL 48 HOURS BEFORE YOU DIG
1-800-553-4344
"It's the Law"
NORTHWEST UTILITIES NOTIFICATION CENTER

DESIGNED	EK
DRAWN	
CRP	380122
HOR.	1"=40'
VERT.	NA
DATE	12/4/03
DWG:	179STSS
SHEET	SS4 OF