CLARK COUNTY DEPARTMENT OF PUBLIC WORKS
COUNTY ROAD PROJECT # 330222
FEDERAL AID No. STPUL-XXXX(XXX)

NE 88TH STREET
FROM HIGHWAY 99 TO SAINT JOHNS ROAD

PLANS FOR THE CONSTRUCTION OF ROADWAY AND STORM DRAINAGE

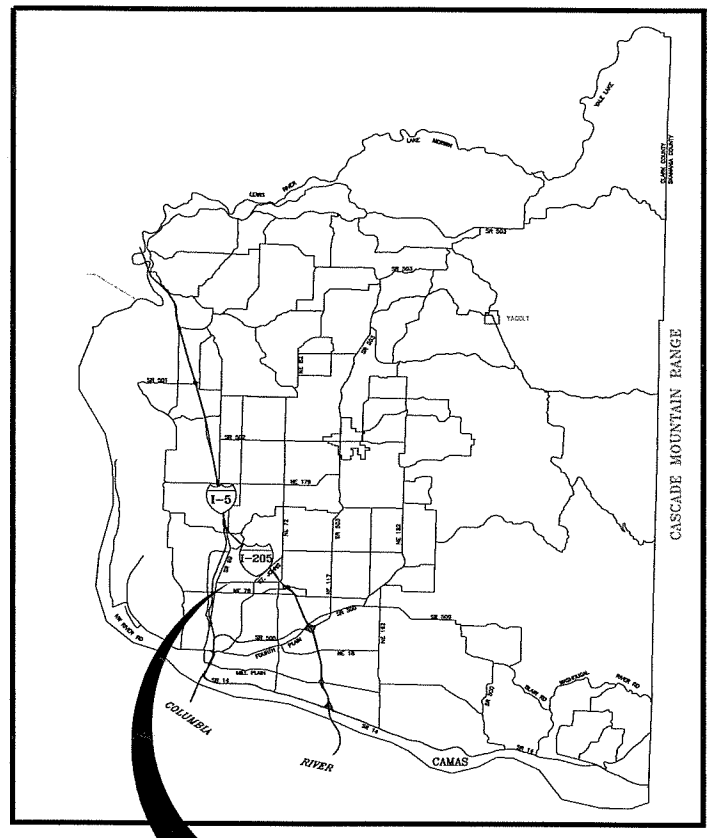

PROJECT LOCATION

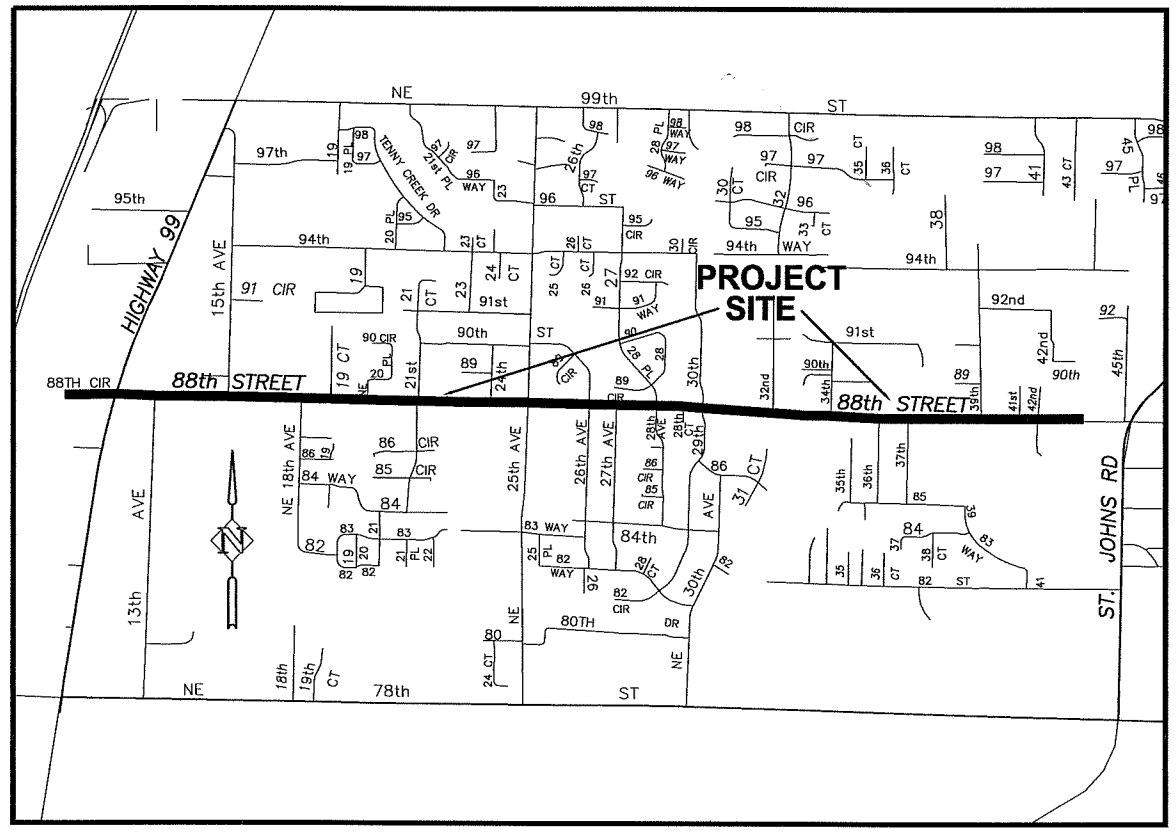

VICINITY MAP

SHT. NO.

1. COVER / VICINITY MAP
2. QUANTITIES, LEGEND, AND GENERAL NOTES
3. OVERALL SITE PLAN
4. OVERALL SITE PLAN
5. HORIZONTAL CONTROL PLAN
6. HORIZONTAL CONTROL PLAN
7. HORIZONTAL CONTROL PLAN
8. TYPICAL ROAD SECTIONS
9. TRENCH DETAILS
10. PAVING DETAILS AND NOTES
11. DRIVEWAY DETAILS AND TABLE
12. DETAILS
13. DETAILS
14. SIDEWALK DETAILS
15. PAVEMENT WIDENING DETAILS
16. WATER DETAILS
17. STORM DETAILS AND NOTES
18. STORM DETAILS
19. STORM DETAILS
20. EROSION AND CONTROL DETAILS
21. EROSION AND CONTROL NOTES
22. EROSION AND CONTROL PLAN
23. EROSION AND CONTROL PLAN
24. EROSION AND CONTROL PLAN
25. EROSION AND CONTROL PLAN
26. EROSION AND CONTROL PLAN
27. SITE PREP AND DEMOLITION
28. SITE PREP AND DEMOLITION
29. SITE PREP AND DEMOLITION
30. SITE PREP AND DEMOLITION
31. SITE PREP AND DEMOLITION
32. SITE PREP AND DEMOLITION
33. SITE PREP AND DEMOLITION
34. DETOUR/PHASING PLAN
35. STORMWATER FACILITY DETAILS
36. 18TH AVE. STORMWATER FACILITY
37. 18TH AVE. STORMWATER FACILITY
38. STORMWATER FACILITY DETAILS
39. EAST END STORMWATER FACILITY
40. RETAINING WALL SECTIONS
41. RETAINING WALL DETAILS
42. RETAINING WALL "A" PLAN AND PROFILE
43. RETAINING WALL "B", "C" & "E" PLAN AND PROFILE
44. RETAINING WALL "D" & "G" PLAN AND PROFILE
45. RETAINING WALL "F", "H" & "I" PLAN AND PROFILE
46. RETAINING WALL "J", "K" & "L" PLAN AND PROFILE
47. RETAINING WALL "M" & "N" PLAN & PROFILE
48. RETAINING WALL "O" PLAN & PROFILE
49. RETAINING WALL "P" & "Q" PLAN & PROFILE
50. RETAINING WALL "R" & "S" PLAN & PROFILE
51. RETAINING WALL "T" & "U" PLAN & PROFILE
52. RETAINING WALL "V" & "W" PLAN & PROFILE
53. RETAINING WALL "X" & "Y" PLAN & PROFILE

SHT. NO.

54. RETAINING WALL "Z1" & "Z2" PLAN & PROFILE
55. RETAINING WALL "AA" PLAN & PROFILE, LOT 111 DRIVEWAY
56. RETAINING WALL "BB" & "DD" PLAN & PROFILE
57. 88TH ST. PLAN AND PROFILE (STA. 100+00 TO STA. 103+50)
58. 88TH ST. PLAN AND PROFILE (STA. 103+50 TO STA. 108+00)
59. 88TH ST. PLAN AND PROFILE (STA. 108+00 TO STA. 112+50)
60. 88TH ST. PLAN AND PROFILE (STA. 112+50 TO STA. 116+50)
61. 88TH ST. PLAN AND PROFILE (STA. 116+50 TO STA. 120+50)
62. 88TH ST. PLAN AND PROFILE (STA. 120+50 TO STA. 125+00)
63. 88TH ST. PLAN AND PROFILE (STA. 125+00 TO STA. 129+50)
64. 88TH ST. PLAN AND PROFILE (STA. 129+50 TO STA. 134+00)
65. 88TH ST. PLAN AND PROFILE (STA. 134+00 TO STA. 138+00)
66. 88TH ST. PLAN AND PROFILE (STA. 138+00 TO STA. 141+50)
67. 88TH ST. PLAN AND PROFILE (STA. 141+50 TO STA. 146+00)
68. 88TH ST. PLAN AND PROFILE (STA. 146+00 TO STA. 150+00)
69. 88TH ST. PLAN AND PROFILE (STA. 150+00 TO STA. 154+00)
70. 88TH ST. PLAN AND PROFILE (STA. 154+00 TO STA. 158+50)
71. 88TH ST. PLAN AND PROFILE (STA. 158+50 TO STA. 163+00)
72. 88TH ST. PLAN AND PROFILE (STA. 163+00 TO STA. 167+50)
73. 88TH ST. PLAN AND PROFILE (STA. 167+50 TO STA. 172+00)
74. 88TH ST. PLAN AND PROFILE (STA. 172+00 TO STA. 176+50)
75. 88TH ST. PLAN AND PROFILE (STA. 176+50 TO STA. 181+00)
76. 88TH ST. PLAN AND PROFILE (STA. 181+00 TO STA. 185+50)
77. 88TH ST. PLAN AND PROFILE (STA. 185+50 TO STA. 190+00)
78. 88TH ST. PLAN AND PROFILE (STA. 190+00 TO END)
79. LOT 114 DRIVEWAY PLAN AND PROFILE
80. LOT 205 & 206 DRIVEWAY PLAN AND PROFILE
81. INTERSECTION/NE HIGHWAY 99
82. INTERSECTION/NE 13TH AVE. PLAN AND PROFILE
83. INTERSECTION/NE 15TH AVE.
84. INTERSECTION/NE 18TH AVE. PLAN AND PROFILE
85. INTERSECTION/NE 19TH CT. & 20TH AVE.
86. INTERSECTION/NE 21ST & 24TH AVE.
87. INTERSECTION/NE 26TH & 27TH AVE.
88. INTERSECTION/NE 28TH AVE.
89. INTERSECTION/NE 28TH CT. PLAN AND PROFILE
90. INTERSECTION/NE 29TH/30TH & 32ND AVE.
91. INTERSECTION/NE 34TH AVE. PLAN AND PROFILE
92. INTERSECTION/NE 36TH & 37TH AVE.
93. INTERSECTION/NE 39TH & 41ST AVE.

SS-1. SIGNING & STRIPING REMOVAL PLAN
SS-2. SIGNING & STRIPING REMOVAL PLAN
SS-3. SIGNING & STRIPING REMOVAL PLAN
SS-4. SIGNING & STRIPING REMOVAL PLAN
SS-5. SIGNING & STRIPING PLAN
SS-6. SIGNING & STRIPING PLAN
SS-7. SIGNING & STRIPING PLAN
SS-8. SIGNING & STRIPING PLAN
SS-9. STRIPING AND PEDESTRIAN REFUGE DETAILS
SS-10. SIGNING & STRIPING DETAILS

INDEX OF SHEETS

FOR INFORMATIONAL PURPOSES ONLY

ALL PLAN DETAIL AND INFORMATION IS NOT SHOWN ON THIS 90% COMPLETED SET OF PLANS.

90% SUBMITTAL - JULY 2004

COMMISSIONERS:

BETTY SUE MORRIS, Chair
JUDIE STANTON, Commissioner
CRAIG A. PRIDEMORE, Commissioner

proud past, promising future
CLARK COUNTY
WASHINGTON

DEPARTMENT OF PUBLIC WORKS

HHPR
Harper Houf Peterson Righellis Inc.
ENGINEERS • PLANNERS • SURVEYORS
1104 MAIN STREET, SUITE 100, VANCOUVER, WA 98660
TEL 360.750.1131 www.hhpr.com FAX 360.750.1141

	Quality Assurance	County Engineer
Glen Bedell, P.E. DATE:	DATE:	Peter Capell, P.E. DATE:

proud past, promising future
CLARK COUNTY
WASHINGTON

Recommended for Approval

Grading _____ Erosion _____
Transportation _____
Storm Water Plan _____

Development Review Manager _____ Date

DESIGN AND ENGINEERING DIVISION- DESIGN SECTION

P:\Crk-12 (NE 88th)\CRK12-DWGS\ Crk12-TL02.DWG

GENERAL NOTES:

1. SURVEY DATUM PER CLARK COUNTY.
2. ALL WORK SHALL CONFORM TO CLARK COUNTY STANDARDS AND SPECIFICATIONS.
3. EXISTING TOPOGRAPHY INFORMATION AND UTILITIES SHOWN ON THE PLANS ARE BASED ON RECORDS PROVIDED BY OTHERS AND THE SURVEY PERFORMED BY CLARK COUNTY. THE CONTRACTOR SHALL VERIFY LOCATIONS OF ALL EXISTING UTILITIES PRIOR TO CONSTRUCTION, AND COORDINATE WITH THE COUNTY AND UTILITY IN A TIMELY AND RESPONSIBLE FASHION IF A CONFLICT EXISTS.
4. ALL NECESSARY CONSTRUCTION SURVEY SHALL BE PROVIDED AT NO COST TO THE CONTRACTOR. HOWEVER, THE CONTRACTOR WILL BE RESPONSIBLE FOR REPLACING NEEDED SURVEY STAKES DESTROYED THROUGH NORMAL OPERATIONS, NEGLIGENCE, OR INATTENTION.
5. AT THE END OF EACH WORK DAY THE CONTRACTOR SHALL CLEAN UP THE PROJECT AREA AND LEAVE IT IN A NEAT, SAFE, AND SECURED MANNER. UPON COMPLETION, THE CONTRACTOR SHALL LEAVE THE PROJECT AREA FREE OF DEBRIS AND UNUSED MATERIAL.
6. THE CONTRACTOR SHALL PRUNE ALL VEGETATION, AS NECESSARY, AWAY AND UP FROM THE STREET AS WELL AS ANY ROOT PRUNING AS DETERMINED BY THE ENGINEER. THE CONTRACTOR SHALL PROTECT ALL EXISTING LANDSCAPING THAT IS TO REMAIN.
7. ALL STATIONING IS BASED UPON THE CONSTRUCTION CENTERLINES, WHICH ARE REFERENCED TO THE RECORD OF SURVEY (R.O.S.)
8. THE CONTRACTOR SHALL PROTECT ANY REMAINING EXISTING CONCRETE CURBS AND SIDEWALKS. IF DAMAGED, THEY WILL BE RESTORED TO ORIGINAL CONDITION AT THE CONTRACTOR'S EXPENSE.
9. CONTRACTOR TO MAINTAIN TWO-WAY OR SHARED DIRECTIONAL TRAFFIC AS SPECIFIED IN THE "SPECIAL PROVISIONS".
10. CONTRACTOR TO NOTIFY C-TRAN (696-4494), THOMAS HARTLEY OPERATIONS CHIEF, 72 HOURS PRIOR TO CONSTRUCTION NEAR ANY C-TRAN FACILITY.
11. COORDINATE UTILITY RELOCATIONS WITH CLARK PUBLIC UTILITIES FOR POWER AND WATER, HAZEL DELL SEWER DISTRICT FOR SANITARY SEWER, QWEST FOR TELEPHONE, N.W. NATURAL GAS, AND COMCAST FOR CABLE T.V.
12. CONTRACTOR SHALL PROTECT EXISTING WATER SERVICE LINES. ALL DISTURBED WATER SERVICE LINES SHALL BE REPAIRED AS DIRECTED. ALL RELOCATED METERS WILL BE RESET IN ACCORD WITH CLARK PUBLIC UTILITY STANDARDS AND SPECIFICATIONS. THE CONTRACTOR SHALL BE RESPONSIBLE FOR THE REPAIR OF EXISTING WATER SERVICE LINES DESTROYED.
13. CONTRACTOR SHALL COORDINATE THE CONSTRUCTION OF APPROACHES WITH PROPERTY OWNERS TO MINIMIZE DISRUPTION OF THEIR ACCESS.
14. THE CONTRACTOR IS RESPONSIBLE FOR COMPLYING WITH THE CONSTRUCTION REQUIREMENTS OF ALL TEMPORARY CONSTRUCTION PERMITS / PROPERTY OWNER AGREEMENTS. COPIES OF ALL TEMPORARY CONSTRUCTION PERMITS AND PROPERTY OWNER AGREEMENTS FOR THIS PROJECT ARE AVAILABLE AT THE DEPARTMENT OF PUBLIC WORKS.
15. CONTRACTOR TO MAINTAIN ACCESS TO ALL PRIVATE PROPERTY DRIVEWAYS DURING CONSTRUCTION.
16. ALL EARTHWORK GRADING AND COMPACTION SHALL CONFORM TO SECTION 8 OF THE SPECIAL PROVISIONS OF THE SPECIFICATIONS.

ALL SANITARY SEWER WORK SHALL CONFORM TO HAZEL DELL SEWER DISTRICT STANDARD SPECIFICATIONS.

LEGEND

PROPOSED

- RIGHT-OF-WAY
- EDGE OF PAVING
- CURB
- CONSTRUCTION NOTE REFERENCE NUMBER
- CURB RETURN REFERENCE NUMBER
- EDGE OF PAVEMENT CURVE REFERENCE NUMBER
- CENTERLINE CURVE REFERENCE NUMBER
- STREET LIGHT
- STORM SEWER PIPE
- STORM MANHOLE
- COMBINATION CURB INLET
- CURB INLET
- PRIVATE CATCH BASIN
- PRIVATE AREA DRAIN
- TRENCH DRAIN
- DITCH INLET
- CATCH BASIN
- EROSION CONTROL SEDIMENT FENCE
- CENTERLINE
- LIMITS OF GRADING
- STA: CONSTRUCTION STATION
- FL FLOW LINE OF GUTTER
- TC TOP OF CURB
- CURB AND GUTTER
- CONCRETE SIDEWALK
- SIDEWALK RAMP
- RETAINING WALL
- A.C. PAVEMENT OVERLAY
- NEW A.C. PAVEMENT (FULL DEPTH CONSTRUCTION)
- PLANE EXISTING A.C. PAVEMENT
- PLANE 2" EXISTING A.C. AND OVERLAY 2" A.C.
- EXISTING PAVEMENT TO BE REMOVED

EXISTING

- RIGHT-OF-WAY
- CONTOUR MAJOR (250)
- CONTOUR MINOR (249)
- EDGE OF PAVING
- CURB
- WATER
- TELEPHONE
- ELECTRIC
- GAS
- SANITARY SEWER
- STORM (12" ST)
- STORM MANHOLE
- SANITARY MANHOLE
- CATCH BASIN/AREA DRAIN
- COMBINATION CURB INLET
- UTILITY POLE W/ GUY WIRE
- LIGHT POLE
- TELEPHONE PEDESTAL
- VALVE
- SIGN
- MAILBOX
- FIRE HYDRANT
- WATER METER BOX W/ SERVICE
- TREES
- UTILITY CROSSING – UNKNOWN DEPTH (SEE PROFILES) — WATER, GAS: W, G, SAN, T — SANITARY, TELEPHONE

QUANTITIES

ITEM	QUANTITY	UNIT	DESCRIPTION
			GENERAL
1	1	L.S.	MOBILIZATION
2	1	EST.	MINOR CHANGE
			TRAFFIC CONTROL
3	3,600	HOUR	TRAFFIC CONTROL LABOR
4	500	HOUR	TRAFFIC CONTROL SUPERVISOR
5	1	L.S.	TEMPORARY TRAFFIC CONTROL DEVICES
6	1,000	S.F.	CONSTRUCTION SIGNS – CLASS "A"
			PREPARATION
7	1	L.S.	CLEARING AND GRUBBING
8	1	EST.	ROADSIDE CLEANUP
9	6	EACH	REMOVAL OF STRUCTURES AND OBSTRUCTIONS
			GRADING
10	15,000	C.Y.	ROADWAY EXCAVATION (INCL. HAUL)
11	12,000	C.Y.	ROADWAY EXCAVATION AND FILL
12	20,500	C.Y.	GRAVEL BORROW (INCL. HAUL)
13	20,000	L.F.	SAWCUT EXISTING PAVEMENT
14	1,000	MGAL	WATER
15	26,000	S.Y.	ROAD APPROACH SUBGRADE PREPARATION
16	26,000	S.Y.	CONSTRUCTION GEOTEXTILE FOR SOIL STABILIZER
			SURFACING
17	20,500	TON	CRUSHED SURFACING BASE COURSE
			ASPHALT CONCRETE PAVEMENT
18	3,000	TON	ASPHALT CONCRETE PAVEMENT CL "A"
19	8,000	TON	ASPHALT CONCRETE PAVEMENT CL "B"
20	16,000	S.Y.	PLANING BITUMINOUS PAVEMENT
21	2,600	S.Y.	ASPHALT CONCRETE APPROACH CL "A"
			CEMENT CONCRETE PAVEMENT
22	1,450	S.Y.	CEMENT CONCRETE APPROACH 3 DAY
			STRUCTURES
23	16,000	S.F.	SEGMENTAL BLOCK RETAINING WALL WITH GEOGRID
24	2,500	S.F.	SEGMENTAL BLOCK RETAINING WALL
25	2,000	S.F.	CEMENT CONCRETE RETAINING WALL
			DRAINAGE AND STORM SEWER
26	6,450	L.F.	TRENCH SAFETY SYSTEM (0'-8')
27	3,000	L.F.	TRENCH SAFETY SYSTEM (>8'-20')
28	720	L.F.	STORM SEWER PIPE, 6 IN DIAM.
29	1,720	L.F.	STORM SEWER PIPE, 10 IN DIAM.
30	1,525	L.F.	STORM SEWER PIPE, 12 IN DIAM. (0'-8')
31	1,451	L.F.	STORM SEWER PIPE, 12 IN DIAM. (>8'-20')
32	812	L.F.	STORM SEWER PIPE, 12 IN DIAM. RIGID PERFORATED PIPE
33	1,130	L.F.	STORM SEWER PIPE, 15 IN DIAM. (0'-8')
34	956	L.F.	STORM SEWER PIPE, 15 IN DIAM. (>8'-20')
35	356	L.F.	STORM SEWER PIPE, 18 IN DIAM. (0'-8')
36	219	L.F.	STORM SEWER PIPE, 18 IN DIAM. (>8'-20')
37	1,000	L.F.	STORM SEWER PIPE, 21 IN DIAM. (0'-8')
38	17	L.F.	STORM SEWER PIPE, 36 IN DIAM.
39	350	L.F.	STORM SEWER PIPE, 72 IN DIAM. (DETENTION PIPE)
40	9	EACH	MANHOLE 48 IN DIAM., TYPE 1 (CONE)
41	23	EACH	MANHOLE 48 IN DIAM., TYPE 3 (FLAT TOP)
42	1	EACH	MANHOLE 48 IN DIAM.,TYPE 3 WITH SEDIMENT CONTROL
43	1	EACH	MANHOLE 48 IN DIAM., OVERFLOW BYPASS
44	3	EACH	MANHOLE 60 IN DIAM., TYPE 3 (FLAT TOP)
45	1	EACH	MANHOLE 72 IN DIAM., TYPE 2 (CONE)
46	1	EACH	MANHOLE 72 IN DIAM., TYPE 3 (FLAT TOP)
47	1	EACH	MANHOLE 72 IN DIAM., TYPE 1 WITH FLOW CONTROL
48	9	EACH	CATCH BASIN TYPE 1
49	14	EACH	CONCRETE COMBINATION CURB INLET
50	46	EACH	CONCRETE CURB INLET
51	1	EACH	CONCRETE DITCH INLET
52	13	EACH	PRIVATE CATCH BASIN
53	2	EACH	PRIVATE AREA DRAIN
54	0	EACH	ADJUST EXISTING STORM SEWER MANHOLE – MAJOR
55	8	EACH	ADJUST EXISTING STORM SEWER MANHOLE – MINOR
56	3	EACH	ADJUST EXISTING STORM SEWER INLET
57	5	EACH	CONNECT TO DRAINAGE STRUCTURE

QUANTITIES

ITEM	QUANTITY	UNIT	DESCRIPTION
			SANITARY SEWERS
58	704	L.F.	TRENCH SAFETY SYSTEM (0'-8')
59	0	L.F.	TRENCH SAFETY SYSTEM (>8'-20')
60	3	EACH	ADJUST EXISTING SANITARY SEWER MANHOLE – MAJOR
61	10	EACH	ADJUST EXISTING SANITARY SEWER MANHOLE – MINOR
62	100	L.F.	PVC SANITARY SEWER PIPE, 6 IN DIAM. (0'-8')
63	0	L.F.	PVC SANITARY SEWER PIPE, 6 IN DIAM. (>8'-20')
64	100	L.F.	PVC SANITARY SEWER PIPE, 8 IN DIAM. (0'-8')
65	0	L.F.	PVC SANITARY SEWER PIPE, 8 IN DIAM. (>8'-20')
66	504	L.F.	PVC SANITARY SEWER PIPE, 4 IN DIAM.
67	0	EACH	MANHOLE 48 IN DIAM., TYPE 1
68	13	EACH	SEWER CLEANOUT
			WATER SYSTEMS
69	62	EACH	ADJUST WATER/GAS VALVE RIM, COVER, FRAME OR CLEANOUT
70	2	EACH	RESET EXISTING HYDRANT
71	9	EACH	RELOCATE EXISTING HYDRANT
72	67	EACH	RELOCATE EXISTING WATER METER AND BOX
73	948	L.F.	RELOCATE EXISTING 8" WATER LINE
74	70	L.F.	RELOCATE EXISITNG 4" WATER LINE
75	2	EACH	8"X4" TEE
76	1	EACH	8"X8" TEE
77	3	EACH	RECONNECT WATER SERVICE
78	2	EACH	RECONNECT 8" WATER LINE
79	2	EACH	RECONNECT 4" WATER LINE
80	140	L.F.	6" WATER LINE FOR HYDRANTS
			EROSION CONTROL AND PLANTING
81	6	EACH	STORM SEWER CLEANOUT
82	1	EACH	STORMFILTER VAULT
83	3,300	S.Y.	GEOTEXTILE FILTER FABRIC
84	1,550	C.Y.	3/4"-1 1/2" CLEAN DRAIN ROCK
85	20	C.Y.	3"-5" ROCK GROUTED IN PLACE
86	10	C.Y.	2"-8" RIP-RAP
			EROSION CONTROL AND PLANTING
87	9,250	L.F.	CONSTRUCTION GEOTEXTILE FOR TEMPORARY SILT FENCE
88	5	ACRE	TEMPORARY SEEDING AND MULCHING
89	2	EACH	POROUS SEDIMENT CONTROL SYSTEMS
90	28	EACH	STABILIZED CONSTRUCTION ENTRANCE
91	100	EACH	STORM DRAIN INLET PROTECTION
92	1	EACH	EROSION CONTROL REINSPECTION FEE
93	40	HOUR	EROSION PREVENTION AND SEDIMENT CONTROL LEAD
94	1	L.S.	SPILL PREVENTION PLAN
95	5	ACRE	PERMANENT SEDDING AND MULCHING FOR ROADWAY
96	0.25	ACRE	BIOFILTRATION SWALE/WETLAND SEEDING, MULCHING, & PLANTINGS
97	1	L.S.	EXISTING TREE PROTECTION
98	52,000	S.F.	EXISTING LAWN AREA REPAIR
99	1	L.S.	LANDSCAPE STRIP PLANTING
100	5,500	C.Y.	TOP SOIL TYPE A
101	1	L.S.	IRRIGATION SYSTEM
			OTHER
102	813	L.F.	CEMENT CONCRETE BARRIER STANDARD CURB
103	16,200	L.F.	CEMENT CONCRETE BARRIER CURB AND GUTTER
104	350	L.F.	CEMENT CONCRETE BARRIER EXTRUDED CURB
105	1,130	L.F.	VINYL COATED CHAIN LINK FENCE TYPE 4 (4' ON RETAINING WALL)
106	1,770	L.F.	VINYL COATED CHAIN LINK FENCE TYPE 4 (6')
107	2	EACH	VINYL COATED DOUBLE 6' CHAIN LINK GATE
108	3,500	L.F.	FENCE RELOCATION, (INCL. GATE)
109	10	EACH	ADJUST SURVEY MONUMENT CASE AND COVER
110	9,700	S.Y.	CEMENT CONCRETE SIDEWALK
111	82	EACH	SIDEWALK RAMP TYPE 2
112	3	EACH	SIDEWALK RAMP TYPE 3
113	17	EACH	SIDEWALK RAMP TYPE 4
114	7	EACH	MAILBOX SUPPORT, TYPE 1-S
115	31	EACH	MAILBOX SUPPORT, DOUBLE
116	2	EACH	MAILBOX SUPPORT, MULTIPLE
117	6	EACH	RELOCATE PRIVATE SIGN
118	1	L.S.	TRAFFIC SIGNAL MODIFICATIONS AT NW 88TH ST. AND HWY 99
119	1	L.S.	TRAFFIC SIGNAL SYSTEM LOOP REPLACEMENT
120	3	EACH	TRAFFIC SIGNAL JUNCTION BOXES
121	1	L.S.	UTILITY RELOCATION/EASEMENTS

FOR INFORMATIONAL PURPOSES ONLY
ALL PLAN DETAIL AND INFORMATION IS NOT SHOWN ON THIS 90% COMPLETED SET OF PLANS.
90% SUBMITTAL - JULY 2004

CLARK COUNTY WASHINGTON — proud past, promising future

DESIGN & ENGINEERING DIVISION

NE 88TH STREET
QUANTITIES, LEGEND, & NOTES

HHPR Harper Houf Peterson Righellis Inc.
ENGINEERS • PLANNERS • SURVEYORS
1104 MAIN STREET, SUITE 100, VANCOUVER, WA 98660
TEL 360.750.1131 www.hhpr.com FAX 360.750.1141

CALL 48 HOURS BEFORE YOU DIG
1-800-553-4344
"It's the Law"
NORTHWEST UTILITIES NOTIFICATION CENTER

DESIGNED:	TSH
DRAWN:	NPR
CRP:	330222
HOR.	N/A
VERT.	N/A
DATE:	7/2004
DWG:	
SHEET 2	OF 99

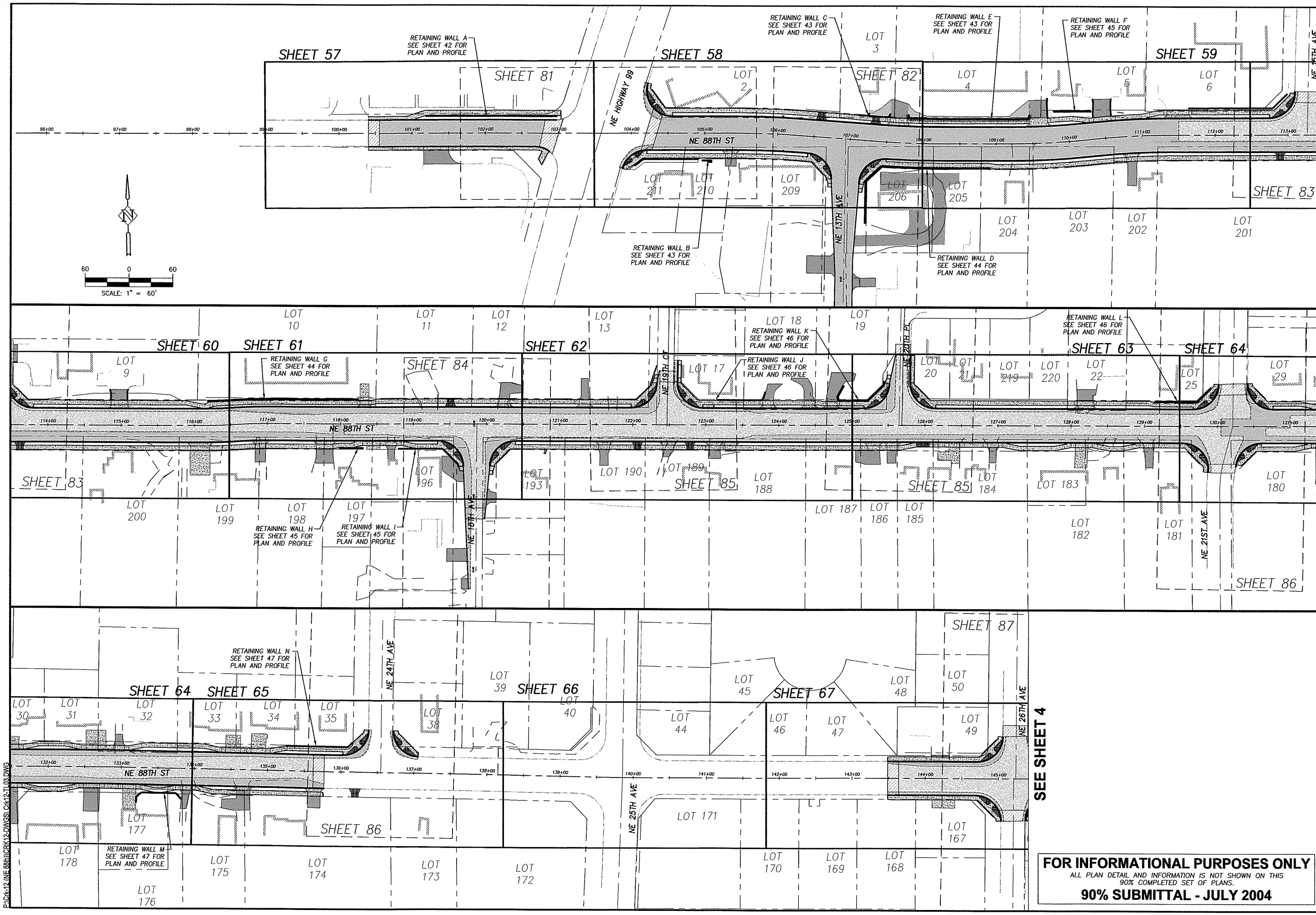

DESIGNED:	TSH
DRAWN:	NPR
CRP:	330222
HOR.:	1" = 60'
VERT.:	N/A
DATE:	7/2004
DWG:	SHEET 3 OF 99

CALL 48 HOURS BEFORE YOU DIG
1-800-553-4344
"It's the Law"
NORTHWEST UTILITIES NOTIFICATION CENTER

Harper Houf Peterson Righellis Inc.
ENGINEERS · PLANNERS · SURVEYORS
1104 MAIN STREET, SUITE 100, VANCOUVER, WA 98660
TEL 360.750.1131 www.hhpr.com FAX 360.750.1141

DESIGN & ENGINEERING DIVISION

NE 88TH STREET OVERALL SITE PLAN

FOR INFORMATIONAL PURPOSES ONLY

ALL PLAN DETAIL AND INFORMATION IS NOT SHOWN ON THIS 90% COMPLETED SET OF PLANS.

90% SUBMITTAL - JULY 2004

proud past, promising future

CLARK COUNTY WASHINGTON

P:\Crk-12 (NE 88th)\CRK12-DWGS\ Crk12-T1-03.DWG

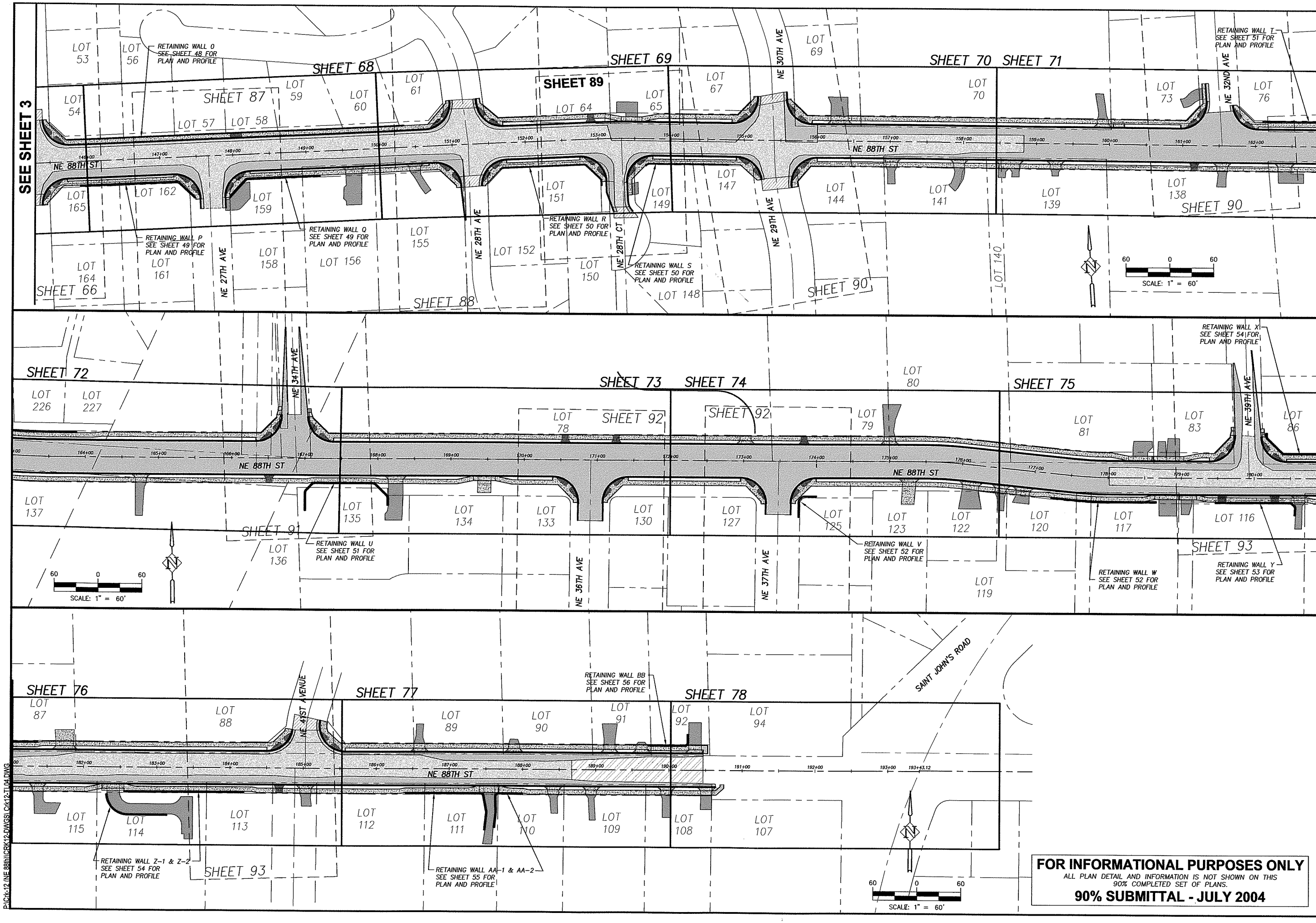

FOR INFORMATIONAL PURPOSES ONLY

ALL PLAN DETAIL AND INFORMATION IS NOT SHOWN ON THIS 90% COMPLETED SET OF PLANS.

90% SUBMITTAL - JULY 2004

DESIGNED: TSH
DRAWN: NPR
CRP: 330222
HOR. 1" = 60'
VERT. N/A
DATE: 7/2004
DWG:
SHEET 4 OF 99

CALL 48 HOURS BEFORE YOU DIG
1-800-553-4344
"It's the Law"
NORTHWEST UTILITIES NOTIFICATION CENTER

Harper Houf Peterson Righellis Inc.
ENGINEERS · PLANNERS · SURVEYORS
1104 MAIN STREET, SUITE 100, VANCOUVER, WA 98660
TEL 360.750.1131 www.hhpr.com FAX 360.750.1141

DESIGN & ENGINEERING DIVISION

NE 88TH STREET OVERALL SITE PLAN

proud past, promising future

CLARK COUNTY WASHINGTON

P:\Crk-12 (NE 88th)\CRK12-DWGS\ Crk12-TL04.DWG

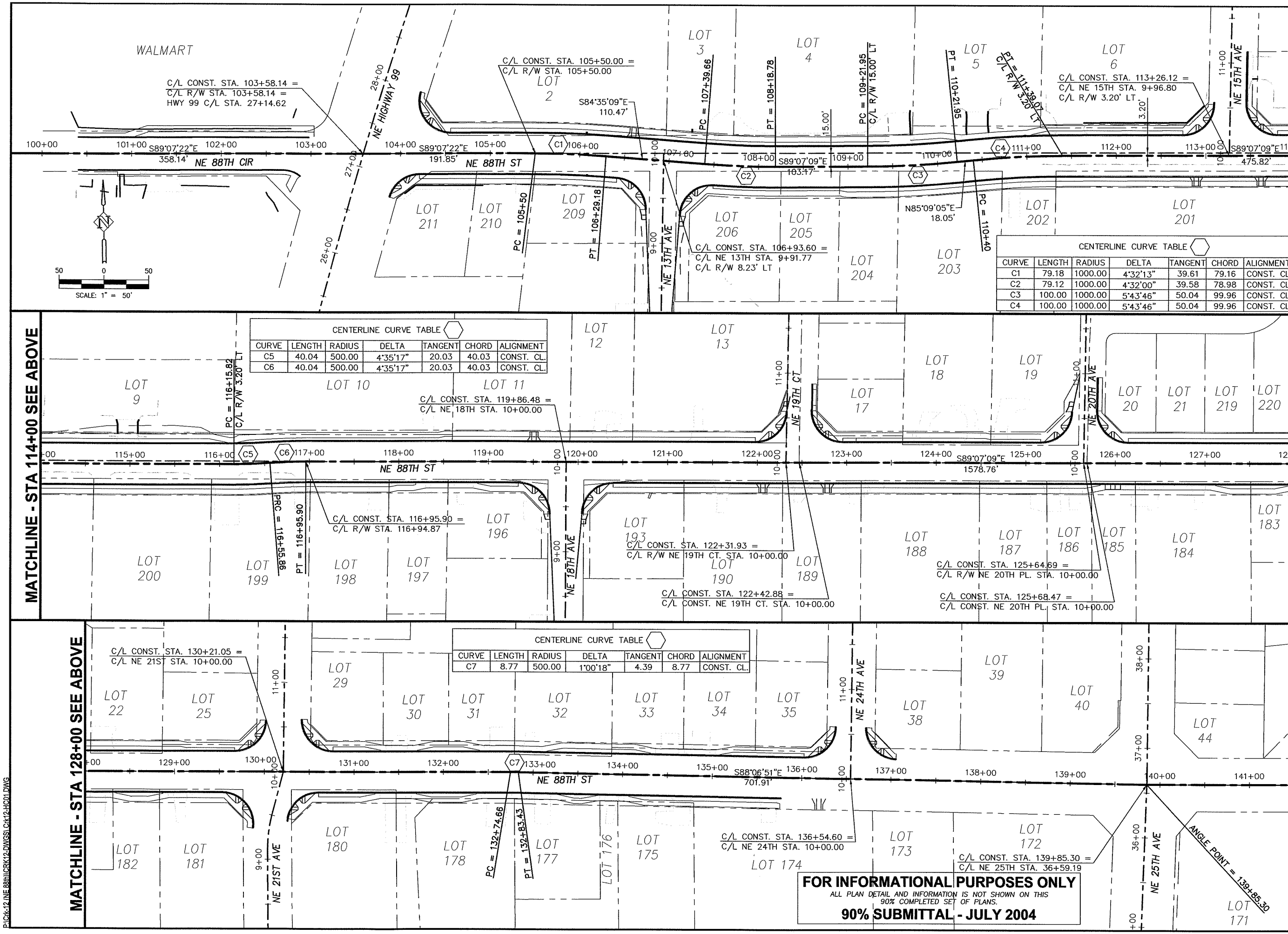

DESIGNED:	TSH
DRAWN:	RAF
CRP:	330222
HOR.	1" = 60'
VERT.	N/A
DATE:	7/2004
DWG:	
SHEET	5 OF 99

CALL 48 HOURS BEFORE YOU DIG
1-800-553-4344
"It's the Law"
NORTHWEST UTILITIES NOTIFICATION CENTER

Harper Houf Peterson Righellis Inc.
ENGINEERS • PLANNERS • SURVEYORS
1300 MAIN STREET, SUITE 100, VANCOUVER, WA 98660
TEL 360.750.1131 www.hhpr.com FAX 360.750.1141

DESIGN & ENGINEERING DIVISION

NE 88TH STREET
HORIZONTAL CONTROL PLAN

proud past, promising future
CLARK COUNTY WASHINGTON

P:\Clk-12 (NE 88th)\CRK12-DWGS\ Clk12-HC01.DWG

MATCHLINE - STA 141+50
SEE PREVIOUS SHEET

MATCHLINE - STA 155+00 SEE BELOW

LOT 45 LOT 46 LOT 47 LOT 48 LOT 49 LOT 50 LOT 53 LOT 54 LOT 56 LOT 57 LOT 58 LOT 59 LOT 60 LOT 61 LOT 64 LOT 65 LOT 67

NE 26TH AVE

C/L CONST. STA. 147+66.76 =
C/L NE 27TH STA. 10+00.00

C/L CONST. STA. 153+31.86 =
C/L CONST. NE 28TH CT. STA. 9+99.39
C/L CONST. STA. 153+17.85 =
C/L R/W NE 28TH CT. STA. 10+00.20

CENTERLINE CURVE TABLE						
CURVE	LENGTH	RADIUS	DELTA	TANGENT	CHORD	ALIGNMENT
C8	28.26	500.00	3°14'16"	14.13	28.25	CONST. CL.

142+00 143+00 144+00 145+00 146+00 S89°06'33"E 1318.38' 147+00 148+00 149+00 150+00 151+00 152+00 153+00 C8 154+00 155

NE 88TH ST

C/L CONST. STA. 145+20.76 =
C/L NE 26TH SOUTH STA. 10+00.00

C/L CONST. STA. 145+23.69 =
C/L NE 26TH NORTH STA. 10+00.00

C/L CONST. STA. 151+22.16 =
C/L NE 28TH STA. 10+00.00

LOT 170 LOT 169 LOT 168 LOT 167 LOT 165 LOT 162 LOT 164 LOT 161 LOT 159 LOT 158 LOT 156 LOT 155 LOT 151 LOT 152 LOT 150 LOT 149 LOT 147 LOT 148

NE 27TH AVE NE 28TH AVE NE 28TH CT

PC = 153+03.72 PT = 153+31.98

MATCHLINE - STA 155+00 SEE ABOVE

MATCHLINE - STA 169+00 SEE BELOW

LOT 69 LOT 70 LOT 73 LOT 76 LOT 226 LOT 227 BPA

NE 30TH AVE NE 32ND AVE NE 34TH AVE

C/L CONST. STA. 155+40.60 =
C/L NE 29TH STA. 10+00.00 =
C/L NE 30TH STA. 10+00.00 =

156+00 157+00 158+00 S85°52'16"E 988.66' 159+00 160+00 161+00 162+00 163+00 164+00 165+00 166+00 167+00 168+00 169

NE 88TH ST

PC = 163+20.64 PT = 163+48.86

C9

C/L CONST. STA. 163+20.64 =
C/L R/W STA. 163+19.63

C/L CONST. STA. 161+53.99 =
C/L NE 32ND STA. 10+00.00

C/L CONST. STA. 166+88.05 =
C/L NE 34TH STA. 10+20.01
C/L R/W 20.00' RT

LOT 144 LOT 141 LOT 140 LOT 139 LOT 138 LOT 137 BPA LOT 136 LOT 135 LOT 134

NE 29TH AVE

CENTERLINE CURVE TABLE						
CURVE	LENGTH	RADIUS	DELTA	TANGENT	CHORD	ALIGNMENT
C9	28.22	500.00	3°14'00"	14.11	28.21	CONST. CL.

MATCHLINE - STA 169+00 SEE ABOVE

MATCHLINE - STA 183+00
SEE NEXT SHEET

CENTERLINE CURVE TABLE						
CURVE	LENGTH	RADIUS	DELTA	TANGENT	CHORD	ALIGNMENT
C10	50.13	500.00	5°44'38"	25.08	50.11	CONST. CL.
C11	50.13	500.00	5°44'38"	25.08	50.11	CONST. CL.

LOT 78 LOT 79 LOT 80 LOT 81 LOT 83 LOT 86 LOT 87

C/L CONST. STA. 170+91.15 =
C/L NE 36TH STA. 10+20.00

C/L CONST. STA. 173+48.16 =
C/L NE 37TH STA. 10+20.00

20.00'

PC = 177+51.23 PT = 178+01.36

NE 39TH AVE

170+00 S89°06'16"E 1202.59' 171+00 172+00 173+00 174+00 175+00 C10 176+00 S83°21'38"E 149.67' 177+00 178+00 179+00 180+00 181+00 182+00 183

NE 88TH ST

C11

LOT 133 LOT 130 LOT 127 LOT 125 LOT 123 LOT 122 LOT 120 LOT 119 LOT 117 LOT 121 LOT 116 LOT 115 LOT 114

NE 36TH AVE NE 37TH AVE

PC = 175+51.44 C/L R/W 20.00' RT
PT = 176+01.57

C/L CONST. STA. 178+01.36 =
C/L R/W STA. 178+00.01

C/L CONST. STA. 179+93.06 =
C/L NE 39TH STA. 10+00.00

FOR INFORMATIONAL PURPOSES ONLY
ALL PLAN DETAIL AND INFORMATION IS NOT SHOWN ON THIS 90% COMPLETED SET OF PLANS.
90% SUBMITTAL - JULY 2004

SCALE: 1" = 50'

P:\Ck12 (NE 88th)\CRK12-DWGS\Crk12-HC01.DWG

DESIGNED:	TSH
DRAWN:	RAF
CRP:	330222
HOR.	1" = 60'
VERT.	N/A
DATE:	7/2004
DWG:	
SHEET	6 OF 99

CALL 48 HOURS BEFORE YOU DIG
1-800-553-4344
"It's the Law"
NORTHWEST UTILITIES NOTIFICATION CENTER

Harper Houf Peterson Righellis Inc.
ENGINEERS • PLANNERS • SURVEYORS
1104 Main Street, Suite 100, Vancouver, WA 98660
TEL 360.750.1141 FAX 360.750.1141
www.hhpr.com

DESIGN & ENGINEERING DIVISION

NE 88TH STREET
HORIZONTAL CONTROL PLAN

proud past, promising future
CLARK COUNTY WASHINGTON

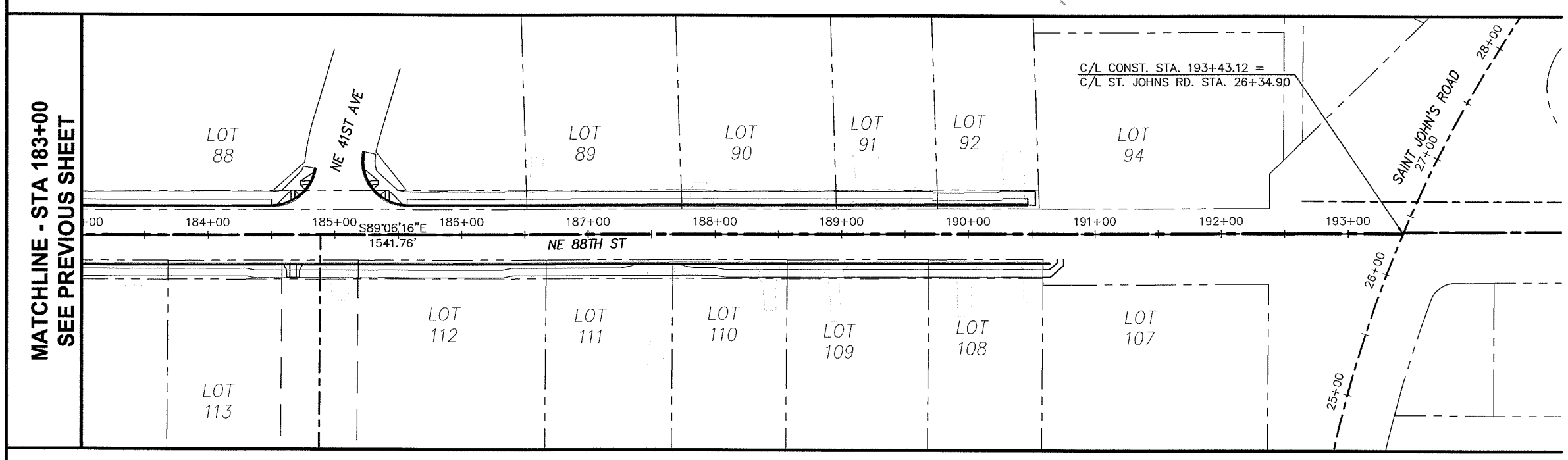

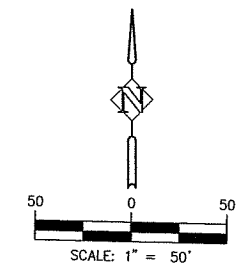

DESIGNED:	TSH
DRAWN:	RAF
CRP:	330222
HOR.	1" = 60'
VERT.	N/A
DATE:	7/2004
DWG:	
SHEET	7 OF 99

CALL 48 HOURS BEFORE YOU DIG
1-800-553-4344
"It's the Law"
NORTHWEST UTILITIES NOTIFICATION CENTER

Harper Houf Peterson Righellis Inc.
ENGINEERS • PLANNERS • SURVEYORS
1109 MAIN STREET, Suite 100, Vancouver, WA 98660
TEL: 360.750.1131 www.hhpr.com FAX: 360.750.1141

DESIGN & ENGINEERING DIVISION

NE 88TH STREET
HORIZONTAL CONTROL PLAN

proud past, promising future
CLARK COUNTY WASHINGTON

FOR INFORMATIONAL PURPOSES ONLY
ALL PLAN DETAIL AND INFORMATION IS NOT SHOWN ON THIS 90% COMPLETED SET OF PLANS.
90% SUBMITTAL - JULY 2004

P:\Crk-12 (NE 88th)\GRK12-DW\GS\ Crk12-HC01.DWG

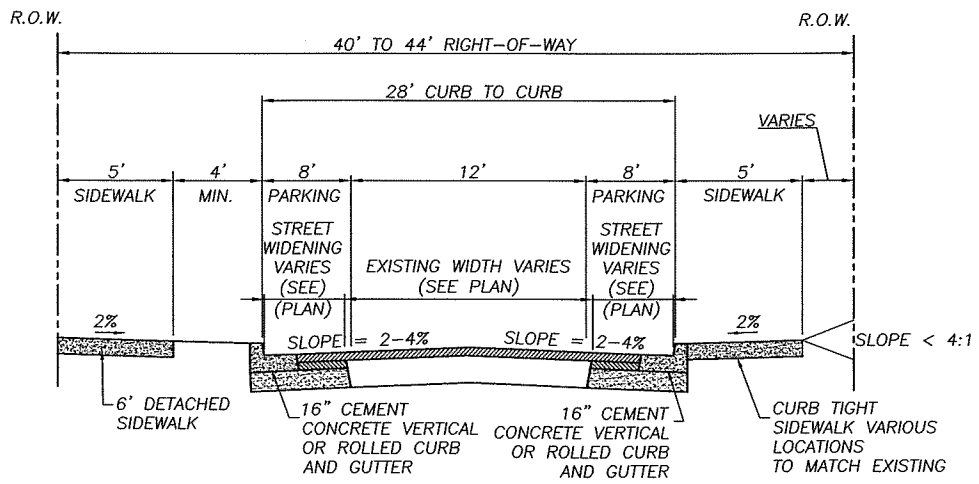

URBAN LOCAL RESIDENTIAL ACCESS

N.T.S.

(NE 19TH CT., NE 20TH PL., NE 28TH CT. AND NE 28TH AVE. SOUTH)

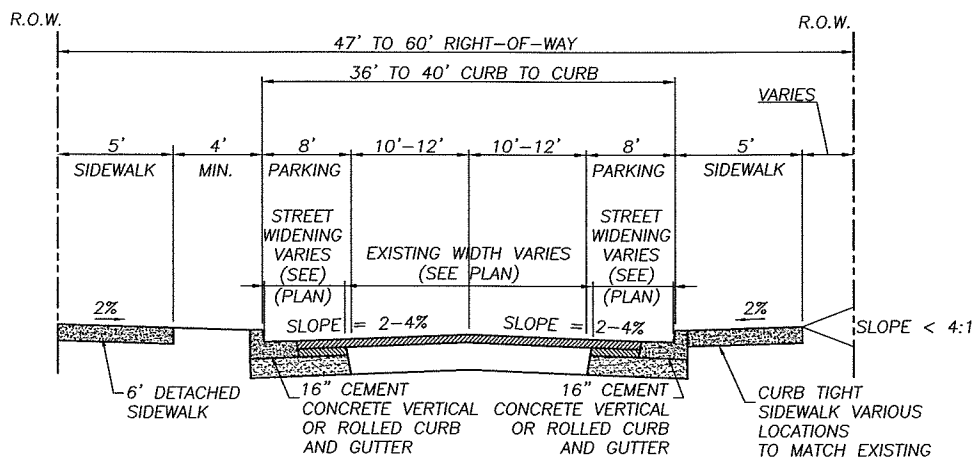

URBAN NEIGHBORHOOD CIRCULATOR

N.T.S.

(NE 18TH AVE., NE 21ST AVE., NE 26TH AVE., NE 28TH AVE. NORTH, NE 29TH AVE., NE 30TH AVE, NE 32ND AVE., NE 34TH AVE., AND NE 39TH AVE.)

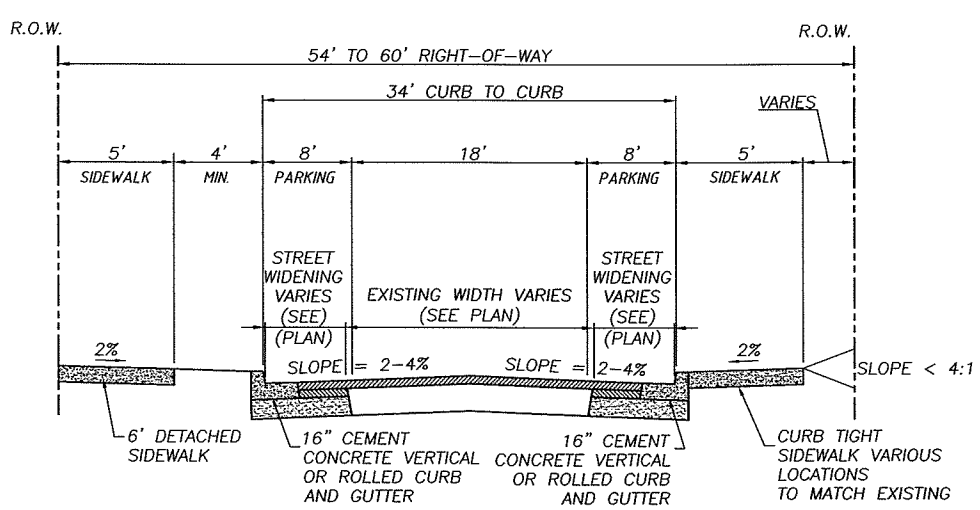

URBAN NEIGHBORHOOD CIRCULATOR

N.T.S.

(NE 24TH AVE., NE 26TH AVE., NE 27TH AVE., NE 36TH AVE., NE 37TH AVE.)

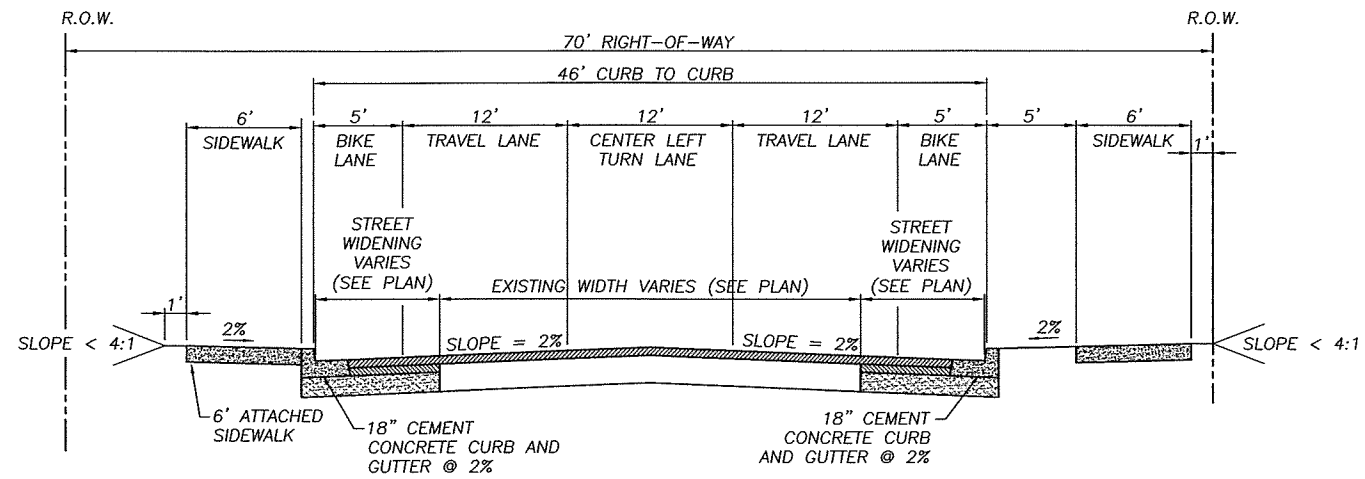

SEE RETAINING WALL TYPICAL SECTIONS SHEET 40

URBAN COLLECTOR (C-2cb)

2-LANE W/CLT AND BIKE LANE N.T.S.

(NE 88TH ST.)

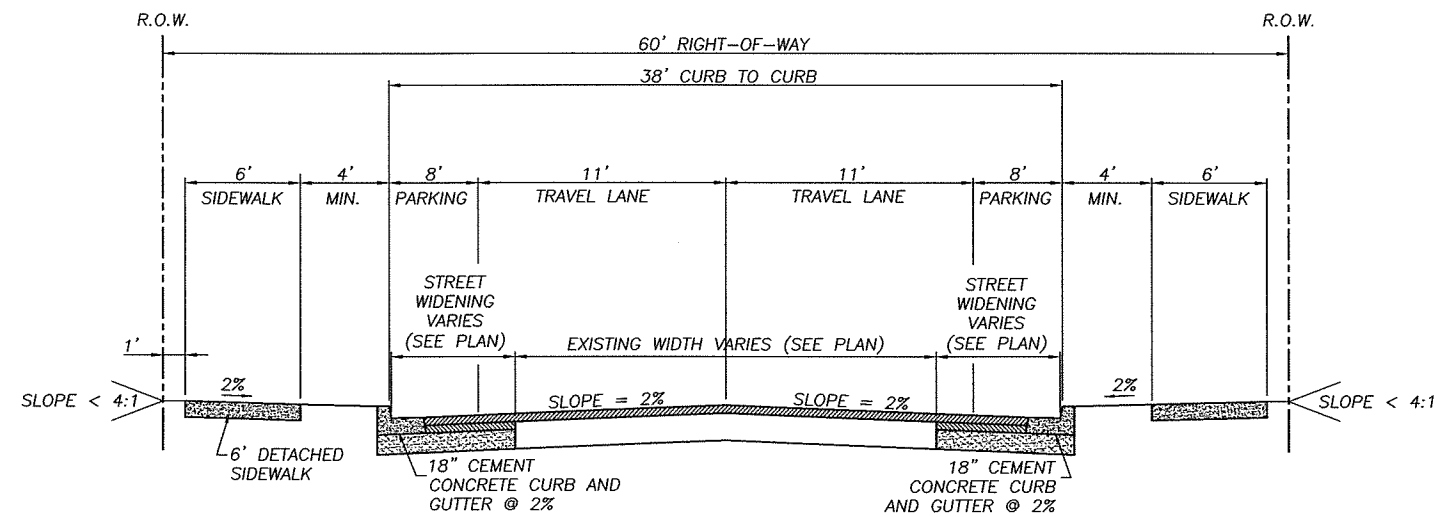

URBAN COLLECTOR (C-2)

2-LANE N.T.S.

(NE 13TH AVE.)

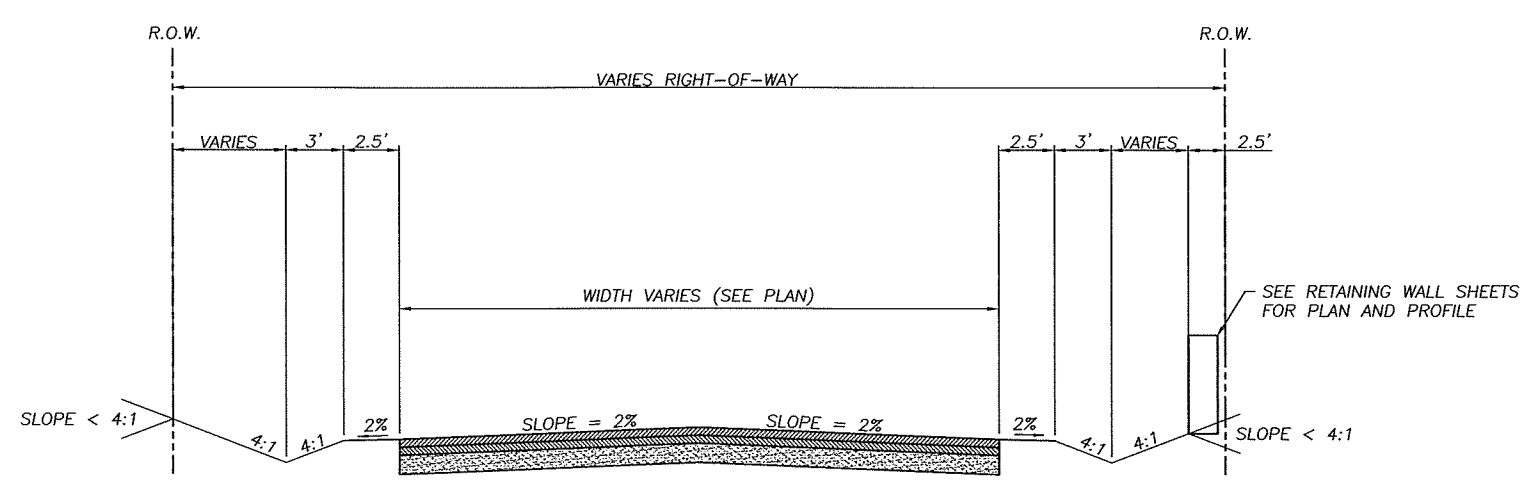

INTERIM URBAN COLLECTOR (C-2)

2-LANE N.T.S.

(NE 13TH AVE.)

FOR INFORMATIONAL PURPOSES ONLY

ALL PLAN DETAIL AND INFORMATION IS NOT SHOWN ON THIS 90% COMPLETED SET OF PLANS.

90% SUBMITTAL - JULY 2004

DESIGNED:	TSH
DRAWN:	RAF
CRP:	330222
HOR.	N/A
VERT.	N/A
DATE:	7/2004
DWG:	
SHEET	8 OF 99

CALL 48 HOURS BEFORE YOU DIG 1-800-553-4344 "It's the Law" NORTHWEST UTILITIES NOTIFICATION CENTER

Harper Houf Peterson Righellis Inc.
ENGINEERS • PLANNERS • SURVEYORS
1104 MAIN STREET, SUITE 100, VANCOUVER, WA 98660
TEL 360.750.1131 www.hhpr.com FAX 360.750.1141

DESIGN & ENGINEERING DIVISION

NE 88TH STREET TYPICAL ROAD SECTIONS

proud past, promising future

CLARK COUNTY WASHINGTON

P:\Clrk-12 INE 88th\ICRK12-DWGS\ICrk12-TS01.DWG

OPEN CUT UTILITY TRENCH BACKFILL DETAIL (COLLECTOR OR ARTERIAL)

SURFACING:

1. All A.C.P. shall be saw cut to provide a straight, clean edge prior to paving.
2. The cut line shall be one continuous straight line from the outer excavation limits of manhole, valve box, etc. to manhole, valve box, etc.
3. Pave with an 0.5 ft. minimum compacted depth A.C.P., or match existing or design section, whichever is greater.
4. Lifts for A.C.P. (Class A) shall be 0.15 ft. minimum and 0.35 ft. maximum for non-surface lifts (0.25' maximum for surface lift); the temperature shall be 250 degree minimum, 350 degree maximum, compacted to 92% of the theoretical maximum.
5. All joints shall be tacked, sealed and sanded.
6. Trench shall be plated until paved.
7. For longitudinal installation, full lane width including turn lanes restoration shall be required or as directed by Clark County. For transverse installation refer to surfacing restoration of detail U6. See Section 12.20A.120.C.

BASE COURSE:

1. 0.80 ft. minimum depth (1-1/4" minus) C.S.B.C. (W.S.D.O.T. approved material).
2. Compacted to 95% of maximum density. See trench zone.
3. Equivalent depth of A.T.B. may be substituted.
4. For transverse or diagonal trenches in existing roadway pavement, CDF will be used from the bottom of full pavement section to a maximum CDF section of 3 feet or to 6" above the top of the pipe, which ever is less. See note 13 of Std. Plan UGN of this Manual.

TRENCH ZONE:

1. Granular backfill as approved by local agency or W.S.D.O.T. specifications for granular backfill. Compacted to 95% of maximum density in the trench zone using Method C compaction as per Section 2-03.3(14)C.
2. Native material may be used if approved prior to construction by Clark County.
3. Trench zone width -- see below.

PIPE ZONE:

1. Pipe zone material as specified by utility owner, and shall conform to section 9-03.12(3) WSDOT Specs.
2. 1.0 ft. max. from top of the pipe. 6" from top of pipe when CDF backfill used.

CONDITIONS:

1. A copy of the permit and requirements shall be on the job site at all times.
2. The permit holder shall be responsible for all restoration and maintenance of ditches, shoulders, driveways, landscaping, etc.
3. Call Clark County at 397-2446 twenty-four hours prior to commencing work.

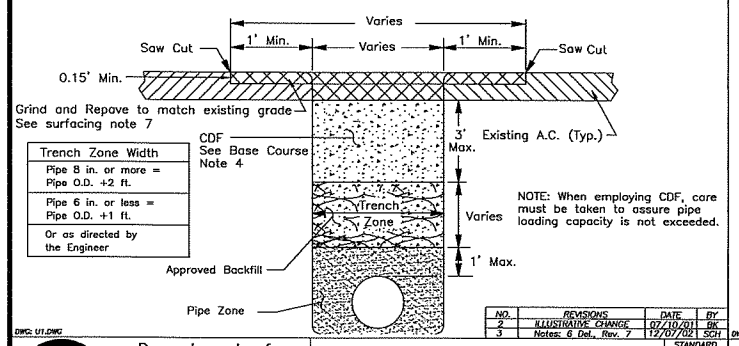

NOTE: When employing CDF, care must be taken to assure pipe loading capacity is not exceeded.

NO.	REVISIONS	DATE	BY
2	ILLUSTRATIVE CHANGE	07/10/01	DS
3	Notes: 6 Del., Rev. 7	12/07/02	SCH

DWG: U1.DWG

Department of Public Works
CLARK COUNTY WASHINGTON
proud past, promising future

OPEN CUT UTILITY TRENCH BACKFILL DETAIL COLLECTOR OR ARTERIAL ROADWAY

APPROVED — COUNTY ENGINEER — DATE 7/20/01

STANDARD U1 — PLAN No. — DESIGNED — DRAWN — DATE 04/25/03

OPEN CUT UTILITY TRENCH BACKFILL DETAIL (COLLECTOR OR ARTERIAL ALTERNATE)

SURFACING:

1. All A.C.P. shall be sawcut to provide a straight, clean edge prior to paving.
2. The cut line shall be one continuous straight line from the outer excavation limits of manhole, valve box, etc. to manhole, valve box, etc.
3. Pave with 0.5 ft. minimum compacted depth A.C.P., or match existing or design section, whichever is greater.
4. Lifts for A.C.P. (Class A) shall be 0.15 ft. minimum and 0.35 ft. maximum for non-surface lifts (0.25' maximum for surface lift); the temperature shall be 250 degree minimum, 350 degree maximum, compacted to 92% of the theoretical maximum.
5. All joints shall be tacked, sealed and sanded.
6. Trench shall be plated until paved.
7. For longitudinal installation, full lane width including turn lanes restoration shall be required or as directed by Clark County. For transverse installation refer to surfacing restoration of detail U6. See Section 12.20A.120.C.

TRENCH ZONE:

1. Granular backfill as approved by local agency or W.S.D.O.T. specifications for granular backfill. Compacted to 95% of maximum density in the trench zone using Method C compaction as per Section 2-03.3 (14)C.
2. Premix concrete shall meet or exceed the requirements of W.S.D.O.T. 2-09.3 (1) E.
3. Trench zone width -- see below.

PIPE ZONE:

1. Pipe zone material as specified by utility owner, and shall conform to section 9-03.12(3) WSDOT Specs.
2. 1.0 ft. max. from top of the pipe.

CONDITIONS:

1. A copy of the permit and requirements shall be on the job site at all times.
2. The permit holder shall be responsible for all restoration and maintenance of ditches, shoulders, driveways, landscaping, etc.
3. Call Clark County at 397-2446 twenty-four hours prior to commencing work.

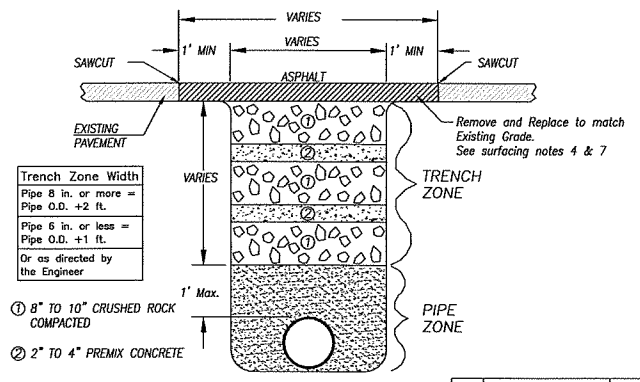

NO.	REVISIONS	DATE	BY
1	PIC #	05/02/01	DS
2	Notes: Del. 6, Rev. 7	12/09/02	SCH

DWG: U2.DWG

Department of Public Works
CLARK COUNTY WASHINGTON
proud past, promising future

OPEN CUT UTILITY TRENCH BACKFILL DETAIL COLLECTOR OR ARTERIAL ROADWAY (ALTERNATE)

APPROVED — COUNTY ENGINEER — DATE 5/4/01

STANDARD U2 — PLAN No. — DESIGNED — DRAWN — DATE 04/25/03

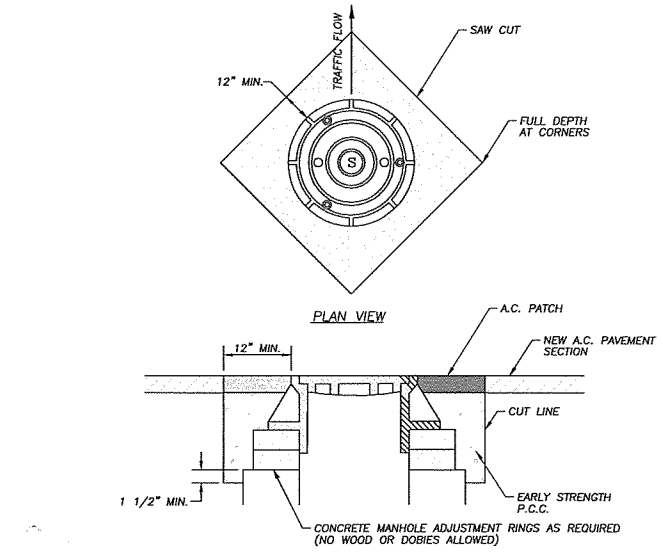

STEP 1 COVER EXSITING MANHOLE WITH BUILDING PAPER AND CONSTRUCT A.C. PAVEMENT OVER TOP OF MANHOLE.

STEP 2 SAW CUT AND REMOVE PAVEMENT AROUND MANHOLE 12" MIN. FROM MANHOLE FRAME.

STEP 3 RAISE MANHOLE FRAME AND COVER USING CONCRETE RINGS AND MECHANICAL ADJUSTMENT DEVICES TO FINISH GRADE MATCHING PROFILE AND CROSS SLOPE.

STEP 4 BACKFILL WITH EARLY STRENGTH P.C.C. AND A.C. TO DEPTHS AS DIRECTED.

NO.	REVISIONS	DATE	BY

Department of Public Works
CLARK COUNTY WASHINGTON

MANHOLE ADJUSTMENT DETAIL

APPROVED — COUNTY ENGINEER — DATE 9/12/00

F27 — DESIGNED — DRAWN — DATE 7/20/00

OPEN CUT UTILITY TRENCH BACKFILL DETAIL (RESIDENTIAL)

SURFACING:

1. All A.C.P. shall be saw cut to provide a straight, clean edge prior to paving.
2. The cut line shall be one continuous straight line from the outer excavation limits of manhole, valve box, etc. to manhole, valve box, etc.
3. Pave with an 0.35 ft. minimum compacted depth A.C.P. or match existing, whichever is greater.
4. Lifts for A.C.P. (Class A) shall be an 0.15 ft. minimum and 0.35 ft. maximum for non-surface lifts (0.25' maximum for surface lift); the temperature shall be 250 degree minimum, 350 degree maximum, compacted to the satisfaction of the engineer.
5. All joints shall be tacked, sealed and sanded.
6. When surfacing exists on both sides of the trench, new A.C.P. will be a minimum of 48" wide.
7. Trench shall be plated until paved.

TOP COURSE:

1. 0.20 ft. minimum depth (5/8" minus) C.S.T.C. (W.S.D.O.T. approved material).
2. Compacted to 95% of maximum density. See trench zone.
3. Equivalent depth of A.T.B. may be substituted.

BASE COURSE:

1. 0.80 ft. minimum depth (1-1/4" minus) C.S.B.C. (W.S.D.O.T. approved material).
2. Compacted to 95% of maximum density. See trench zone.
3. Equivalent depth of A.T.B. may be substituted.

TRENCH ZONE:

1. Granular backfill as approved by local agency or W.S.D.O.T. specifications for granular backfill. Compacted to 95% of maximum density in the trench zone using Method C compaction as per Section 2-03.3 (14)C.
2. Native material may be used if approved prior to construction by Clark County.
3. Trench zone width -- see below.

PIPE ZONE:

1. Pipe zone material as specified by utility owner, and shall conform to section 9-03.12(3) WSDOT Specs.
2. 1.0 ft. max. from top of the pipe.

CONDITIONS:

1. A copy of the permit and requirements shall be on the job site at all times.
2. The permit holder shall be responsible for all restoration and maintenance of ditches, shoulders, driveways, landscaping, ect.
3. All pavement cuts, at a min. be temp patched @ the end of each day w/perm patch to be done on the 1st suitable day.
4. Work shall be done in a timely manner to minimize the impact to the public.
5. Call Clark County at 397-2446 twenty-four hours prior to commencing work.

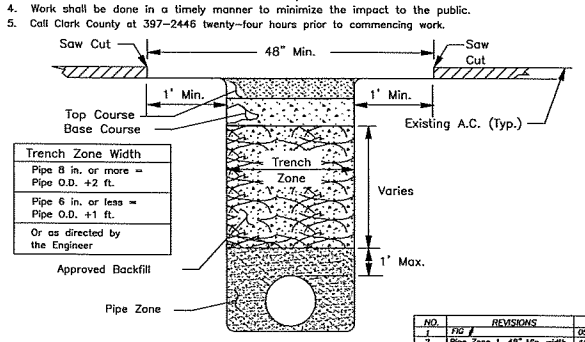

NO.	REVISIONS	DATE	BY
1	PIC #	05/02/01	DS
2	Pipe Zone 1, 48" Min. width	10/07/02	SCH

DWG: U3.DWG

Department of Public Works
CLARK COUNTY WASHINGTON
proud past, promising future

OPEN CUT UTILITY TRENCH BACKFILL DETAIL RESIDENTIAL ROADWAY

APPROVED — COUNTY ENGINEER — DATE 5/4/01

STANDARD U3 — PLAN No. — DESIGNED — DRAWN — DATE 04/25/03

ROADWAY SHOULDER INCLUDES LAWN AND LANDSCAPE

SHOULDER ROCK:

1. 0.50 ft. minimum depth (1 1/4" minus) crushed rock. (Clark County Approved Material).
2. Compacted to 95% of maximum density. See trench zone.
3. Rock shall extend from E.O.P. to the back of trench at approx. .05 Ft./Ft. slope.

LAWN & LANDSCAPE AREAS:

1. A County approved top soil shall be placed 0.50 Ft. in depth.
2. Area to be restored to match existing.

TRENCH ZONE:

Where the distance from E.O.T. to E.O.P. is less than or equal to the depth of the trench; these conditions shall apply:

1. Granular backfill as approved by local agency or W.S.D.O.T. specifications for granular backfill. Compacted to 95% of maximum density in the trench zone using Method C compaction as per Section 2-03.3 (14)C.
2. Native material may be used if approved prior to construction.
3. Trench zone width -- see below.
4. Shoulder rock or landscaped sections as applicable.

PIPE ZONE:

1. Pipe zone material as specified by utility owner, and shall conform to section 9-03.12(3) WSDOT Specs.
2. 1.0 ft. max. from top of the pipe.

CONDITIONS:

1. A copy of the permit and requirements shall be on the job site at all times.
2. The permit holder shall be responsible for all restoration and maintence of ditches, shoulders, driveways, landscaping, ect.
3. Call Clark County at 397-2446 twenty-four hours prior to commencing work.

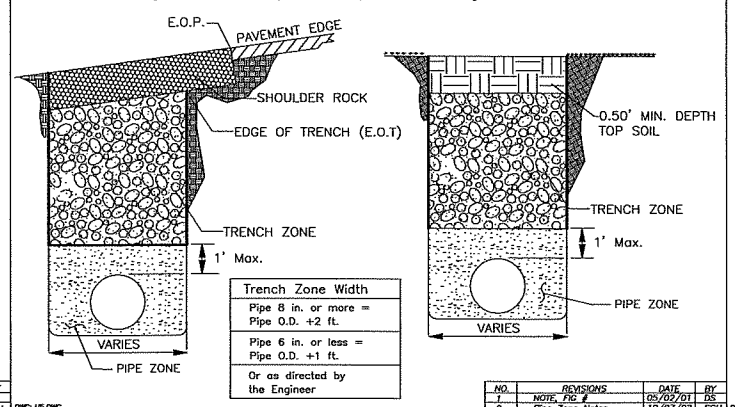

NO.	REVISIONS	DATE	BY
1	NOTE, FIG #	05/02/01	DS
2	Pipe Zone Notes	10/07/02	SCH

DWG: U5.DWG

Department of Public Works
CLARK COUNTY WASHINGTON
proud past, promising future

ROADWAY SHOULDER INCLUDES LAWN & LANDSCAPE

APPROVED — COUNTY ENGINEER — DATE 5/4/01

STANDARD U5 — PLAN No. — DESIGNED — DRAWN — DATE 04/25/03

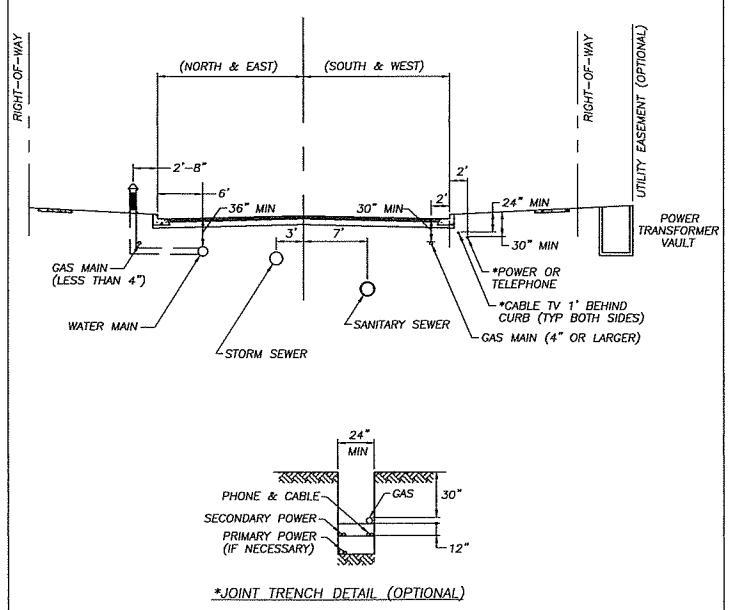

NOTE:

*If six foot utility easement is present along property frontage, placement shall be at back of sidewalk within utility easement.

*Alternate locations considered only to salvage core roadway, or to avoid substantial conflict with existing utilities.

*Manholes cones to be rotated to keep manhole cover located outside of wheel path.

*Gas valves are to be located 2' Min. from face of curb.

NO.	REVISIONS	DATE	BY
1	NOTES	01/31/01	PC
2	FIG #	05/02/01	DS
3	Rev. Water & Gas Dim.	12/11/02	SCH

DWG: U9.DWG

Department of Public Works
CLARK COUNTY WASHINGTON
proud past, promising future

UTILITY PLACEMENT DETAIL

APPROVED — COUNTY ENGINEER — DATE 5/4/01

STANDARD U9 — PLAN No. — DESIGNED — DRAWN — DATE 7/20/00

FOR INFORMATIONAL PURPOSES ONLY

ALL PLAN DETAIL AND INFORMATION IS NOT SHOWN ON THIS 90% COMPLETED SET OF PLANS.

90% SUBMITTAL - JULY 2004

DESIGNED:	TSH
DRAWN:	TSH
CRP:	330222
HOR.	N/A
VERT.	N/A
DATE:	7/2004
DWG:	
SHEET 9 OF 99	

CALL 48 HOURS BEFORE YOU DIG 1-800-553-4344 "It's the Law" NORTHWEST UTILITIES NOTIFICATION CENTER

Harper Houf Peterson Righellis Inc.
ENGINEERS • PLANNERS • SURVEYORS
1104 MAIN STREET, SUITE 100, VANCOUVER, WA 98660
TEL 360.750.1131 www.hhpr.com FAX 360.750.1141

DESIGN & ENGINEERING DIVISION

NE 88TH STREET TRENCH DETAILS

proud past, promising future
CLARK COUNTY WASHINGTON

P:\Crk-12-INE 88th\CRK12-DWG\S1 Crk12-DT01.DWG

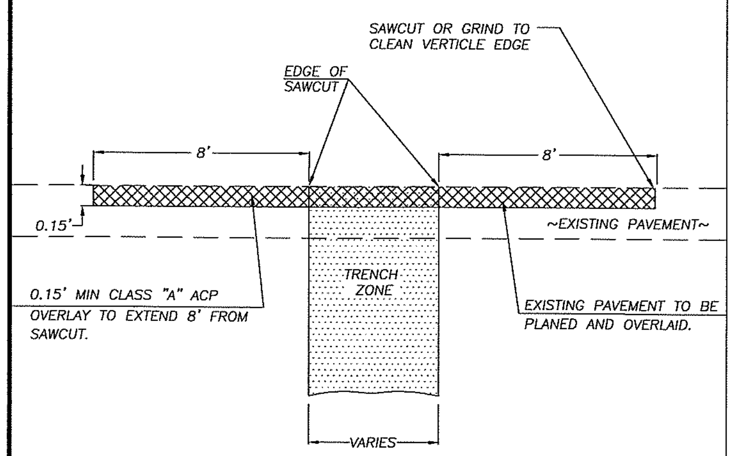

NOTE: THIS DETAIL IS TO BE USED ON URBAN ARTERIALS OR RURAL COLLECTORS OR PAVEMENT SURFACE RECONSTRUCTION AND/OR WHEN THE EXISTING ROADWAY IS LESS THAN 5 YEARS OLD.

SEE APPROPRIATE DETAIL FOR TRENCH ZONE RECONSTRUCTION REQUIREMENTS.

TO BE USED AS AN ALTERNATIVE IN LIEU OF FULL REMOVAL AND REPLACEMENT OF EFFECTED AREA AND APPROVED BY CLARK COUNTY.

NO.	REVISIONS	DATE	BY
1	NOTE	03/09/01	BK
2	FIG. #	05/02/01	DS
3	CHANGED ACP CLASS	03/28/02	KB
4	CHANGE EXTEND OF OVERLAY	07/07/03	SCH

DWG: U6.DWG

Department of Public Works
CLARK COUNTY WASHINGTON
proud past, promising future

PAVEMENT SURFACE RECONSTRUCTION ALTERNATE FOR TRANSVERSE CUTS
APPROVED
COUNTY ENGINEER — DATE 9/30/02
STANDARD PLAN No. U6
DESIGNED / DRAWN / DATE 3/28/02

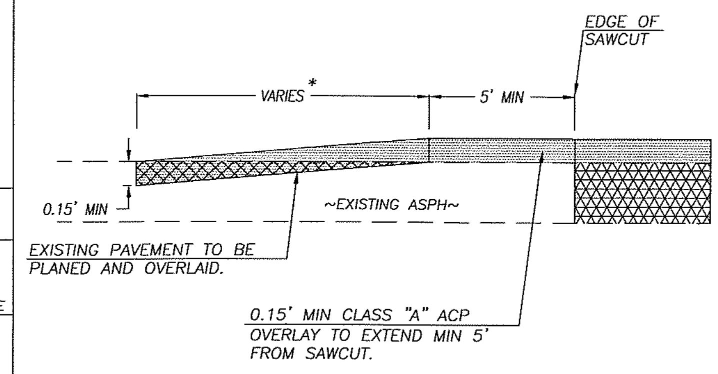

* LENGTH VARIES TO MAKE SMOOTH TRANSITION TO EXISTING ROAD GRADE. (MINIMUM 15 FEET)

TO BE USED AS AN ALTERNATIVE IN LIEU OF FULL LANE REMOVAL AND REPLACEMENT WHEN APPROVED BY CLARK COUNTY.

NO.	REVISIONS	DATE	BY
1	NOTE	03/09/01	BK
2	FIG #	05/02/01	DS
3	CHANGED ACP CLASS	03/28/02	KB

DWG: U7.DWG

Department of Public Works
CLARK COUNTY WASHINGTON
proud past, promising future

BUTT JOINT PLANING AND OVERLAY DETAIL
APPROVED
COUNTY ENGINEER — DATE 9/30/02
STANDARD PLAN No. U7
DESIGNED / DRAWN / DATE 3/28/02

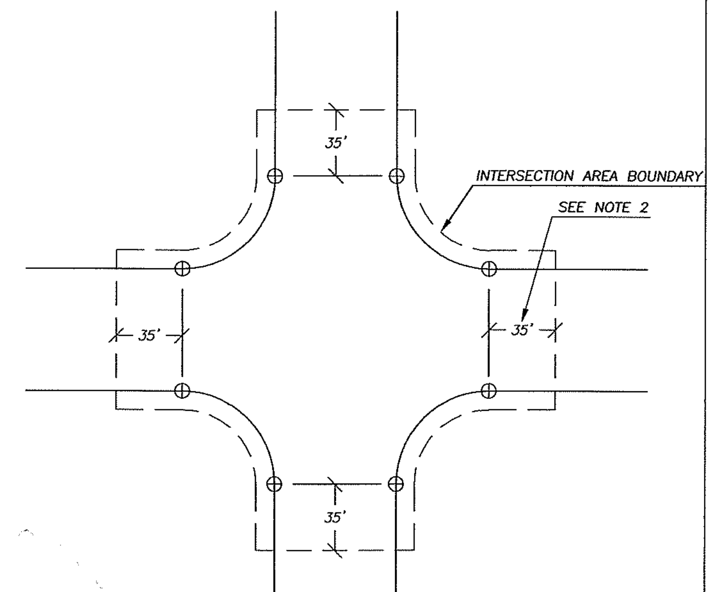

LEGEND
⊕ CURB RETURN (TYP.)

NOTE:
1. Any overlay which is required as a part of the restoration of a utility cut within the intersection area boundary will provide for complete coverage of the affected intersection area.
2. Transverse crossing within this 35' zone, and only at the discretion of County Engineer, may apply Std. Plan U6 as alternate to full intersection overlay.

NO.	REVISIONS	DATE	BY
1	FIG #	05/02/01	DS
2	ADD NOTE 2	12/09/02	SCH

DWG: U8.DWG

Department of Public Works
CLARK COUNTY WASHINGTON
proud past, promising future

INTERSECTION OVERLAY DETAIL FOR ALL ROAD INTERSECTIONS
APPROVED
COUNTY ENGINEER — DATE 5/4/01
STANDARD PLAN No. U8
DESIGNED / DRAWN / DATE 01/16/01

STANDARD TRENCH RESTORATION NOTES:

1. UNLESS OTHERWISE EXEMPTED IN CCC 12.20A.070.F, A WRITTEN UTILITY PERMIT SHALL BE REQUIRED FOR EACH CONSTRUCTION ACTIVITY WITHIN EXISTING COUNTY ROAD RIGHT-OF-WAY TO INSTALL, MOVE OR REPAIR A UTILITY INCLUDING PRIVATE LINES. NO WORK MAY COMMENCE PRIOR TO PERMIT APPROVAL BY THE COUNTY. OFF-SITE UTILITY CONSTRUCTION WORK THAT IS BEING DONE UNDER A GENERAL DEVELOPMENT PERMIT WILL REQUIRE A SEPARATE UTILITY PERMIT. SEE CCC 13.12A AND 12.20A FOR UTILITY PERMIT REQUIREMENTS.

2. BEFORE ANY CONSTRUCTION WORK WITHIN THE RIGHT-OF-WAY MAY COMMENCE, A SURETY BOND (OR OTHER INSTRUMENT ACCEPTABLE TO THE COUNTY) IN AN AMOUNT REQUIRED BY THE COUNTY, BUT NOT LESS THAN $1,000, WRITTEN BY A SURETY COMPANY AUTHORIZED TO DO BUSINESS IN WASHINGTON, MAY BE REQUIRED BY THE COUNTY TO INSURE COMPLETION OF CONSTRUCTION, INCLUDING RESTORATION OF SURFACING, SLOPES, SLOPE TREATMENT, TOPSOIL, LANDSCAPE TREATMENT, DRAINAGE FACILITIES AND CLEANUP OF RIGHT-OF-WAY FOR A PERIOD ENDING NOT MORE THAN 2 YEARS AFTER DATE OF COMPLETION. SEE CCC 12.20A.070.C(2)

3. ALL MATERIALS AND WORKMANSHIP SHALL BE IN CONFORMANCE WITH THE STANDARD SPECIFICATIONS FOR ROAD, BRIDGE, AND MUNICIPAL CONSTRUCTION PREPARED BY THE WASHINGTON STATE CHAPTER OF THE AMERICAN PUBLIC WORKS ASSOCIATION (APWA) AND THE WASHINGTON STATE DEPARTMENT OF TRANSPORTATION (WSDOT) AND SHALL COMPLY WITH THE CURRENT EDITION, EXCEPT WHERE OTHERWISE NOTED IN CCC 12.20A, AND THESE STANDARD PLANS.

THE RIGHT-OF-WAY RESTORATION SHALL CONFORM TO COUNTY STANDARDS AND POLICIES AND APPLICABLE STATE AND FEDERAL LAWS, OR THE WORK SHALL BE REJECTED. THE COST ASSOCIATED WITH ALL WORK AND MATERIALS NECESSARY TO OBTAIN COMPLIANCE SHALL BE THE RESPONSIBILITY OF THE PERMIT APPLICANT.

4. UNDERGROUND UTILITY INSTALLATION SHALL CONFORM TO CCC 12.20A.080.F, AND SHALL PROVIDE FOR RESTORATION OF THE PAVEMENT, PAVED SHOULDERS, CURBS AND GUTTERS, AND SIDEWALKS IN ACCORDANCE WITH CCC 12.20A.120, UNLESS OTHERWISE MODIFIED BY THE UTILITY PERMIT.

5. TRENCH BACKFILL AND RESURFACING SHALL BE AS SHOWN IN THE STANDARD DETAILS, UNLESS MODIFIED BY THE UTILITY PERMIT. SURFACING DEPTHS AND PAVING LIMITS SHOWN IN THE STANDARD PLANS ARE MINIMUMS AND MAY BE INCREASED BY THE COUNTY ENGINEER TO MEET TRAFFIC LOADINGS OR SITE CONDITIONS.

6. THE FINAL PAVEMENT PATCH SHALL BE COMPLETED AT THE FIRST POSSIBLE OPPORTUNITY, AND NOT TO EXCEED THIRTY (30) DAYS AFTER FIRST OPENING THE TRENCH. THIS TIME FRAME MAY BE ADJUSTED IF DELAYS ARE DUE TO INCLEMENT WEATHER, OR OTHER ADVERSE CONDITIONS. HOWEVER, DELAYING OF FINAL PATCH OR OVERLAY WORK IS ALLOWABLE ONLY WHEN APPROVED BY THE COUNTY ENGINEER. THE COUNTY ENGINEER MAY DEEM IT NECESSARY TO COMPLETE THE WORK WITHIN THIRTY (30) DAYS TIME FRAME AND NOT ALLOW ANY TIME EXTENSION. IF THIS OCCURS, THE CONTRACTOR SHALL PERFORM THE NECESSARY WORK AS DIRECTED BY THE ENGINEER.

7. WHEN TRENCHING WITHIN THE ROADWAY SHOULDERS, THE SHOULDER SHALL BE RESTORED AS SHOWN IN STANDARD PLAN #U5.

8. IT IS THE COUNTY'S BASIC POLICY THAT NO PAVEMENTS SHALL BE CUT FOR A PERIOD OF FIVE (5) YEARS AFTER THE PAVEMENT HAS BEEN CONSTRUCTED, OVERLAID OR SEAL-COATED AND THAT CUTTING OF ANY PAVED ROAD IS DISCOURAGED. UNTRENCHED CONSTRUCTION METHODS MUST BE EXPLORED ON ALL PAVED ROAD CROSSINGS REGARDLESS OF CONDITION OF THE ROAD PAVEMENT. A CURRENT LIST OF ROAD SEGMENTS AFFECTED BY THIS PROHIBITION CAN BE SUPPLIED UPON REQUEST.

9. WHEN ROADWAY SURFACES ARE WINDOWED AND POTHOLED, AND WHERE URBAN ARTERIALS OR RURAL COLLECTORS MUST BE TRANSVERSELY TRENCHED, CONTROL DENSITY FILL (CDF) SHALL BE USED FOR THE TOP 3 FEET OF THE BACKFILL (SEE CCC 12.20A.080.K,L). WHEN EMPLOYING CDF, CARE MUST BE TAKEN TO ASSURE PIPE LOADING CAPACITY IS NOT EXCEEDED.

10. AS A CONDITION OF CCC 12.20A, IT IS THE RESPONSIBILITY OF THE PERMIT APPLICANT TO PROVIDE 24 HOUR NOTIFICATION PRIOR TO COMMENCING PROPOSED CONSTRUCTION ACTIVITIES WITHIN THE LIMITS OF THE COUNTY RIGHT-OF-WAY. FAILURE TO COMPLY SHALL RESULT IN THE DISCONTINUING OF THE PERMITTED CONSTRUCTION ACTIVITY FOR A PERIOD OF AT LEAST 24 HOURS.

11. FINAL RESTORATION SHALL BE COMPLETED IN A MANNER THAT PROVIDES THE AREA OF CONSTRUCTION TO BE RESTORED IN AN EQUALLY AS GOOD OR BETTER CONDITION THAN THE EXISTING CONDITION OF THE COUNTY RIGHT-OF-WAY.

12.

PAGE 1 OF 3

NO.	REVISIONS	DATE	BY
1	ADD 13 & GRADING NOTES	12/9/03	SCH

DWG: UGN.DWG

Department of Public Works
CLARK COUNTY WASHINGTON
proud past, promising future

STANDARD TRENCH RESTORATION, GRADING, AND SIGNING & STRIPING NOTES
APPROVED
COUNTY ENGINEER — DATE 01/01/04
STANDARD PLAN No. UGN
DESIGNED SCH / DRAWN SCH / DATE 10/07/02

STANDARD TRENCH RESTORATION NOTES (CONT.):

13. CONTROL DENSITY FILL (CDF) SHALL CONSIST OF A MIXTURE OF PORTLAND CEMENT, FLY ASH, AGGREGATE, WATER AND ADMIXTURES PROPORTIONED TO PROVIDE A NON-SEGREGATING, NON-SETTLING FILL PRODUCING UNCONFINED COMPRESSIVE 28 DAY STRENGTHS FROM 50 PSI TO A MAXIMUM OF 150 PSI.

a.) THE CONTROL DENSITY FILL (CDF) MIX DESIGN SHALL BE FROM AN APPROVED SOURCE.

b.) THE CONTRACTOR SHALL SUBMIT THE MIX DESIGN ONE WEEK MINIMUM PRIOR TO INTENDED USE FOR REVIEW AND APPROVAL. ALTERNATIVELY THE CONTRACTOR MAY PROVIDE THE SUPPLIER AND MIX NUMBER IF THE CDF MIX HAS BEEN APPROVED WITHIN THE PREVIOUS 12 MONTHS.

c.) THE CONTRACTOR WILL PROVIDE BATCH WEIGHTS SHOWING THE AMOUNTS OF ALL INGREDIENTS IN THE MIX, BATCH TIME, AND THE TOTAL AMOUNT OF THE BATCH.

d.) CONTROL DENSITY FILL SHALL BE PERFORMANCE BASED AND MEET THE FOLLOWING CRITERIA:

- THE CDF MIXTURE SHALL BE FLOWABLE NON-SEGREGATING AND SELF LEVELING
- CAN BE PAVED ON WITHIN 48 HOURS UNLESS OTHERWISE APPROVED
- TYPE F FLYASH: 200 LBS MINIMUM
- TYPE I OR II CEMENT: 50 LBS MINIMUM
- SETTLING SHALL BE LESS THAN 1/8" PER FOOT DEPTH
- SHALL BE MACHINE DIGABLE UNLESS NOTED OTHERWISE
- FINE AGGREGATE (LESS THAN 3/8") SHALL BE USED UNLESS OTHERWISE APPROVED
- CONCRETE UNIT WEIGHT SHALL BE 100 PCF MINIMUM

e.) CDF SHALL NOT BE PLACED ON FROZEN GROUND. CDF PATCHING, MIXING AND PLACING MAY BE STARTED IF WEATHER CONDITIONS ARE FAVORABLE, WHEN THE TEMPERATURE IS AT 34-DEGREES F AND RISING. AT THE TIME OF PLACEMENT, CDF MUST HAVE A TEMPERATURE OF AT LEAST 40-DEGREES F. MIXING AND PLACING SHALL STOP WHEN THE TEMPERATURE IS 38-DEGREES F OR LESS AND FALLING. EACH FILLING STAGE SHALL BE AS CONTINUOUS AN OPERATION AS POSSIBLE.

f.) TRENCH SECTION TO BE FILLED WITH CDF SHALL BE CONTAINED AT EITHER END OF THE TRENCH SECTION BY BULKHEADS OR EARTH FILL.

g.) DURING CDF CURE TIME CONTRACTOR SHALL INSTALLED STEEL PLATES OR OTHER PROTECTIVE DEVICES WHICH WILL ALLOW FOR THE PASSAGE AND SAFETY OF TRAFFIC WITH NO LOAD TRANSFERRED TO THE CDF.

h.) CONTRACTOR SHALL ALLOW FOR A MINIMUM 48 HOUR CURE TIME FOR CDF PRIOR TO PLACING ASPHALT.

30-INCH DEPTH OF CDF MAY BE REDUCED IF CONFLICTING WITH PIPE ZONE BACKFILL.

i.)

STANDARD GRADING NOTES:

1. IF EARLY GRADING ACTIVITY IS APPROVED, IT IS TO BE PERFORMED AT APPLICANTS RISK.

2. FILL/GRADING SHALL BE PERFORMED IN COMPLIANCE WITH APPENDIX CHAPTER 33 OF THE UNIFORM BUILDING CODE (UBC).

3. ALL SUBGRADE UNDER PAVED SURFACES, CURBS, BUILDINGS, FOOTINGS, SLABS AND CONCRETE WALKS SHALL BE COMPACTED TO 95% OF MAXIMUM RELATIVE DENSITY OR AS SPECIFIED BY THE PROJECT GEOTECHNICAL ENGINEER. WHERE FILLING IS REQUIRED, THE FILL MATERIAL SHALL BE PLACED IN 8" LIFTS WITH EACH LIFT BEING COMPACTED TO 95% OF MAXIMUM RELATIVE DENSITY OF THE FILL MATERIAL BEFORE THE NEXT LIFT OR FINISHED SURFACE IS PLACED. WHERE FILLING IS REQUIRED OUTSIDE THE ABOVE-MENTIONED STRUCTURAL AREAS, COMPACTION REQUIREMENTS SHALL BE 90% OF MAXIMUM RELATIVE DENSITY. PROJECT GEOTECHNICAL ENGINEER SHALL SUBMIT COMPACTION TEST RESULTS TO COUNTY INSPECTOR FOR PROPER CERTIFICATION OF FILL PLACEMENT.

4. UNDER WET WEATHER CONDITIONS (OCT – APR) SUBGRADE THAT CAN NOT MEET COMPACTION MAY REQUIRE ADDITIONAL TESTING TO DETERMINE THE DEPTH OF OVER EXCAVATION, ADDITIONAL AGGREGATE AND GEOTEXTILE TO BE INSTALLED. UPON INSPECTION OF THE SUBGRADE, THE COUNTY INSPECTOR MAY REQUEST A GEOTECHNICAL ENGINEER TO SUBMIT AN ALTERNATE WET WEATHER STREET SECTION FOR REVIEW AND APPROVAL BY ENGINEERING SERVICES.

PAGE 2 OF 3

NO.	REVISIONS	DATE	BY
1	ADD 13 & GRADING NOTES	12/9/03	SCH

DWG: UGN.DWG

Department of Public Works
CLARK COUNTY WASHINGTON
proud past, promising future

STANDARD TRENCH RESTORATION, GRADING, AND SIGNING & STRIPING NOTES
APPROVED
COUNTY ENGINEER — DATE 01/01/04
STANDARD PLAN No. UGN
DESIGNED SCH / DRAWN SCH / DATE 10/07/02

STANDARD SIGNING & STRIPING NOTES:

1. THE STRIPING AND PAVEMENT MARKING REMOVAL PROCESS SHALL CONFORM TO 2002 WSDOT "STANDARD SPECIFICATION FOR ROAD, BRIDGE AND MUNICIPAL CONSTRUCTION" SECTION 8-22.3(6). REMOVAL OF EXISTING PAINTED PAVEMENT MARKINGS IS BY SHOT BLASTING OR GRINDING. THE CONTRACTOR SHALL HAVE A WRITTEN APPROVAL BY THE REVIEWING AUTHORITY FOR ANY OTHER METHOD OF REMOVAL.

2. THE CONTRACTOR SHALL MAINTAIN EXISTING PERMANENT SIGNING IN ACCORDANCE WITH 2002 WSDOT "STANDARD SPECIFICATION FOR ROAD, BRIDGE AND MUNICIPAL CONSTRUCTION" SECTION 1-07.23(1).

3. THE CONTRACTOR SHALL MAINTAIN THE STRIPING ON THE ROADWAY AT THE CONTRACTOR'S EXPENSE. THE CONTRACTOR SHALL BE RESPONSIBLE FOR SCHEDULING WHEN RENEW STRIPING, SUBJECT TO APPROVAL BY REVIEWING AGENCY. WHEN THE SCOPE OF THE PROJECT DOES NOT REQUIRE WORK ON THE ROADWAY, THE CONTRACTOR WILL BE RESPONSIBLE FOR MAINTAINING THE STRIPING.

4. THE CONTRACTOR SHALL PROVIDE TEMPORARY PAVEMENT MARKINGS IN ACCORDANCE WITH 2002 WSDOT "STANDARD SPECIFICATION FOR ROAD, BRIDGE AND MUNICIPAL CONSTRUCTION" SECTION 8.23.

5. ALL NEW SIGNING, STRIPING AND PAVEMENT MARKINGS, INCLUDING RELOCATION OF EXISTING SIGNS TO, THE FINAL LOCATION, WILL BE PERFORMED BY CLARK COUNTY PUBLIC WORKS AND REIMBURSED BY THE APPLICANT FOR SERVICES RENDERED.

PAGE 3 OF 3

NO.	REVISIONS	DATE	BY
1	ADD 13 & GRADING NOTES	12/9/03	SCH

DWG: UGN.DWG

Department of Public Works
CLARK COUNTY WASHINGTON
proud past, promising future

STANDARD TRENCH RESTORATION, GRADING, AND SIGNING & STRIPING NOTES
APPROVED
COUNTY ENGINEER — DATE 01/01/04
STANDARD PLAN No. UGN
DESIGNED SCH / DRAWN SCH / DATE 10/07/02

FOR INFORMATIONAL PURPOSES ONLY
ALL PLAN DETAIL AND INFORMATION IS NOT SHOWN ON THIS 90% COMPLETED SET OF PLANS.
90% SUBMITTAL - JULY 2004

P:\Crk-12 (NE 88th)\CRK12-DWGS\ Crk12-DT01.DWG

CLARK COUNTY WASHINGTON
proud past, promising future

DESIGN & ENGINEERING DIVISION

NE 88TH STREET
PAVING DETAILS AND NOTES

Harper Houf Peterson Righellis Inc.
ENGINEERS • PLANNERS • SURVEYORS
1104 MAIN STREET, SUITE 100, VANCOUVER, WA 98660
TEL 360.750.1131 www.hhpr.com FAX 360.750.1141

CALL 48 HOURS BEFORE YOU DIG
1-800-553-4344
"It's the Law"
NORTHWEST UTILITIES NOTIFICATION CENTER

DESIGNED:	TSH
DRAWN:	TSH
CRP:	330222
HOR.	N/A
VERT.	N/A
DATE:	7/2004
DWG:	
SHEET	10 OF 99

88TH STREET DRIVEWAY TABLE

LOT	STATION		LENGTH (FT)	WIDTH (FT)	MATERIAL	TYPE/NOTES
x	101+33	RT	20	34	ASPHALT	3
210	105+36	RT	10	15	ASPHALT	1
4	107+65	LT	25	24	ASPHALT	1, MODIFIED
4	109+59	LT	27	24	ASPHALT	1, MODIFIED
5	110+48	LT	20	24	ASPHALT	3
202	110+84	RT	32	15	ASPHALT	1
6	111+48	LT	0	30	ASPHALT	1, MODIFIED
9	114+97	LT	14	22	ASPHALT	1
199	116+08	RT	33	26	CONCRETE	1
199	116+90	RT	18	15	ASPHALT	1
198	117+78	RT	19	23	ASPHALT	1
10	118+33	LT	20	12	CONCRETE	1, MODIFIED
197	118+45	RT	7	18	CONCRETE	3
196	118+70	RT	14	15	ASPHALT	3
12	120+24	LT	22	15	ASPHALT	1
13	121+34	LT	28	15	ASPHALT	1
190	121+61	RT	21	15	ASPHALT	1
190	122+49	RT	9	15	ASPHALT	1
189	123+11	RT	11	16	ASPHALT	1
188	123+34	RT	1	15	ASPHALT	1
18	123+85	LT	22	15	ASPHALT	1, MODIFIED
18	124+37	LT	30	15	ASPHALT	1, MODIFIED
19	124+72	LT	38	15	ASPHALT	1, MODIFIED
187	125+30	RT	20	17	ASPHALT	1
186	125+56	RT	17	15	ASPHALT	1
185	126+33	RT	17	15	CONCRETE	3
184	126+93	RT	16	15	ASPHALT	3
183	128+14	RT	23	17	CONCRETE	3
22	128+19	LT	15	22	ASPHALT	1, MODIFIED
181	129+06	RT	22	15	ASPHALT	3
180	131+46	RT	44	23	ASPHALT	3
30	131+51	LT	6	18	CONCRETE	3
178	132+59	RT	26	22	ASPHALT	3
31	132+65	LT	15	27	CONCRETE	3
32	132+96	LT	10	15	ASPHALT	3
177	133+11	RT	22	18	CONCRETE	3
176	133+88	RT	20	15	ASPHALT	3
33	134+52	LT	12	20	CONCRETE	3
175	134+66	RT	20	18	ASPHALT	1
34	134+87	LT	15	20	CONCRETE	3
174	135+63	RT	15	17	ASPHALT	1
49	144+21	LT	0	25	ASPHALT	3
167	144+25	RT	11	31	ASPHALT	3
156	149+64	RT	40	22	ASPHALT	1
155	150+48	RT	30	15	ASPHALT	1
65	153+45	LT	15	16	ASPHALT	3
69	156+30	LT	25	24	ASPHALT	1, MODIFIED
141	157+02	RT	23	15	ASPHALT	1
141	157+94	RT	30	15	ASPHALT	1
140	158+54	RT	12	15	ASPHALT	1
139	158+72	RT	11	15	ASPHALT	1
139	159+27	RT	9	15	ASPHALT	1
70	159+90	LT	34	15	ASPHALT	1
138	161+55	RT	21	15	ASPHALT	1
137	162+38	RT	15	18	ASPHALT	1
136	164+76	RT	45	15	ASPHALT	1
135	168+24	RT	84*	20	ASPHALT	1
134	169+46	RT	46*	18	CONCRETE	3
78	172+90	LT	420	15	ASPHALT	1, MODIFIED
79/80	175+00	LT	43	15	ASPHALT	1
123	175+25	RT	59*	18	CONCRETE	1
122	176+10	RT	62*	22	ASPHALT	1
119	176+58	RT	23	15	ASPHALT	1
120	176+86	RT	10	18	ASPHALT	1
81	178+43	LT	15	20	ASPHALT	3
117	178+80	RT	17	21	ASPHALT	3
83	178+66	LT	15	12	ASPHALT	3
83	178+81	LT	20	18	ASPHALT	3
121	179+05	RT	15	15	ASPHALT	3
116	180+61	RT	34	15	ASPHALT	1, MODIFIED
115	181+37	RT	30	15	ASPHALT	1
87	181+75	LT	15	24	CONCRETE	1
114	182+40	RT	160	17	ASPHALT	3
42nd	185+03	RT	17	15	ASPHALT	1
89	186+54	LT	26	15	ASPHALT	1
111	187+51	RT	68	15	ASPHALT	3
90	187+87	LT	7	15	ASPHALT	1
110	188+40	RT	25	15	ASPHALT	1
109	188+92	RT	34	15	ASPHALT	1
91	189+19	LT	28	15	ASPHALT	1
91	189+61	LT	3	15	ASPHALT	1
108	189+95	RT	30	15	ASPHALT	1
92	190+36	LT	30	17	ASPHALT	1
108	190+51	RT	19	15	ASPHALT	1

SIDE STREET DRIVEWAY TABLE

LOT	STATION	LENGTH (FT)	WIDTH (FT)	MATERIAL	TYPE/NOTES
9	15TH AVE	5	24	ASPHALT	4
73	32ND AVE	40	13	ASPHALT	4
159	27TH AVE	41	15	ASPHALT	4
196	18TH AVE	40	15	ASPHALT	4
206	13TH AVE	200	15	ASPHALT	4
300	13TH AVE	30	24	ASPHALT	4
301	13TH AVE	40	15	ASPHALT	4
302	13TH AVE	25	15	ASPHALT	4
303	13TH AVE	25	15	ASPHALT	4

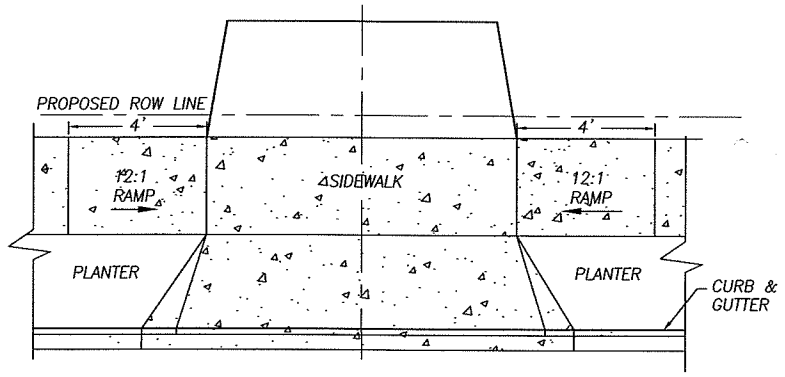

TYPE 1 MODIFIED (4" DEPRESSED APRON DETAIL)

N.T.S.

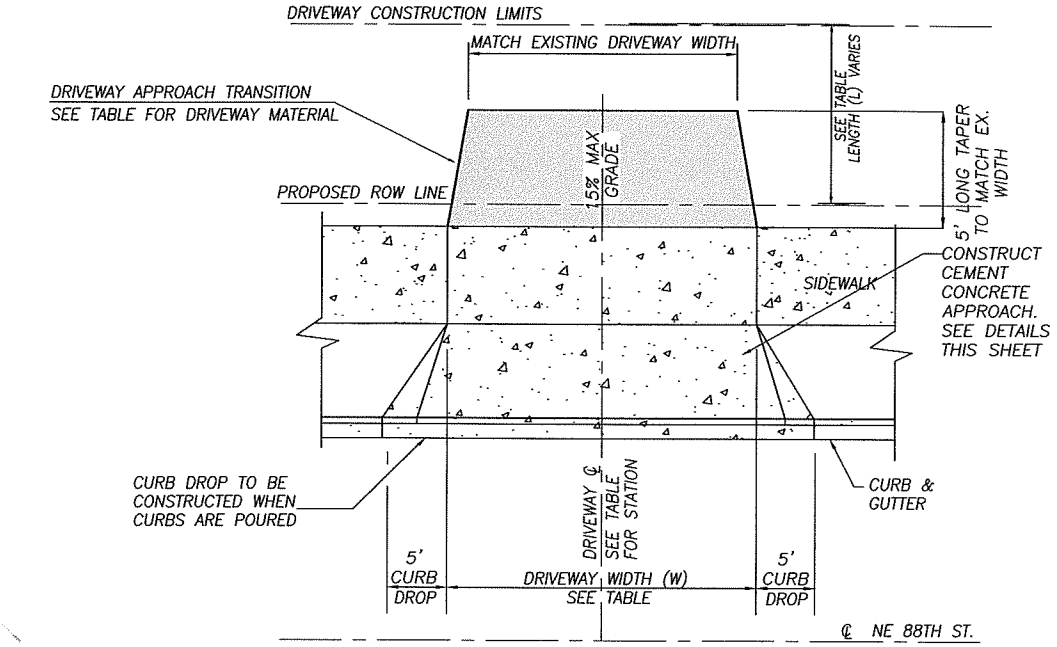

NOTE: CONTRACTOR SHALL COORDINATE CONSTRUCTION WITH PROPERTY OWNER.

CONCRETE DRIVEWAY TAPER DETAIL

N.T.S.

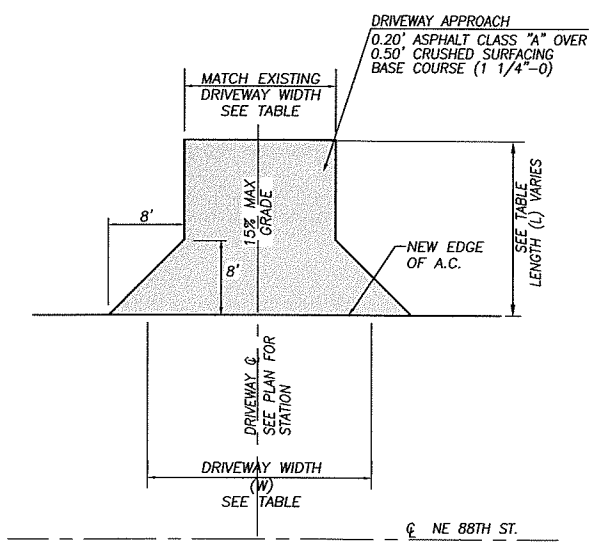

NOTE: CONTRACTOR SHALL COORDINATE CONSTRUCTION WITH PROPERTY OWNER.

TYPE 4 AC APPROACH DETAIL

N.T.S.

1. ASPHALT DRIVEWAYS SHALL BE CONSTRUCTED OF 0.20' ASPHALT CLASS "A" OVER 0.50' CRUSHED SURFACING
2. LENGTH IS MEASURED FROM PROPOSED ROW LINE TO CATCH POINT OR GRADING LIMIT OF THE DRIVEWAY, UNLESS OTHERWISE NOTED. (AN "*" INDICATES LENGTH MEASURED FROM THE CENTERLINE.)

TYPE 1 CONCRETE APPROACH

NOTES:
1. A MINIMUM 3' WIDE ACCESSIBLE ROUTE SHALL BE MAINTAINED IN ALL PEDESTRIAN ACCESSIBLE AREAS.
2. CONTRACTION POINTS SHALL BE PLACED ALONG SIDEWALKS IN ACCORD WITH SIDEWALK DETAIL. ALL JOINTS SHALL BE CLEANED AND EDGED.
3. CHANGES IN LEVEL UP TO 1/4" MAY BE VERTICAL AND WITHOUT EDGE TREATMENT. CHANGES IN LEVEL BETWEEN 1/4" AND 1/2" SHALL BE BEVELED WITH A SLOPE NO GREATER THAN 2:1.
4. CEMENT CONCRETE APPROACHES SHALL BE CONSTRUCTED OF AIR-ENTRAINED CLASS 3000 AND MAY BE POURED INTEGRAL WITH CURB.
5. EXISTING CURB, GUTTER, AND SIDEWALK TO BE SAWCUT AND REMOVED FOR INSTALLATION OF APPROACH.
6. COMMERCIAL DRIVEWAY REQUIRES REINFORCING STEEL (6"x6" 10 GA WIRE MESH) MIN. 3" COVER.
7. 3" DEPTH 3/4"-0 CRUSHED AGGREGATE BASE COMPACTED TO 95% OF MAX. DRY DENSITY.
8. SUBGRADE PREPARATION PER WSDOT STD. SPEC. 2-06.3(1).

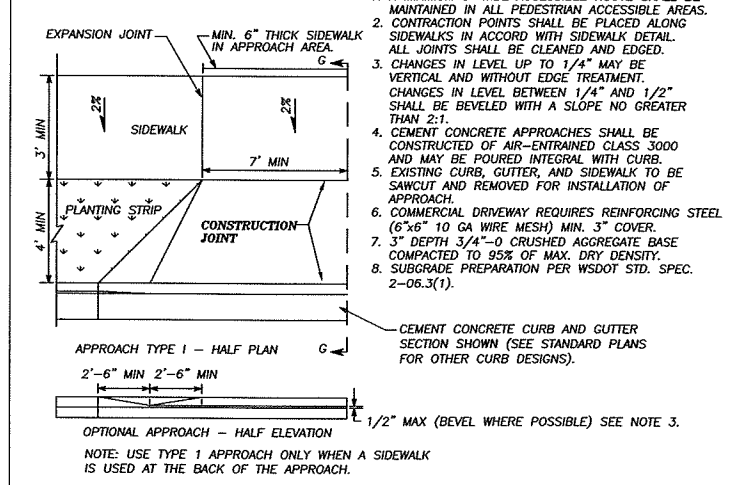

NOTE: USE TYPE 1 APPROACH ONLY WHEN A SIDEWALK IS USED AT THE BACK OF THE APPROACH.

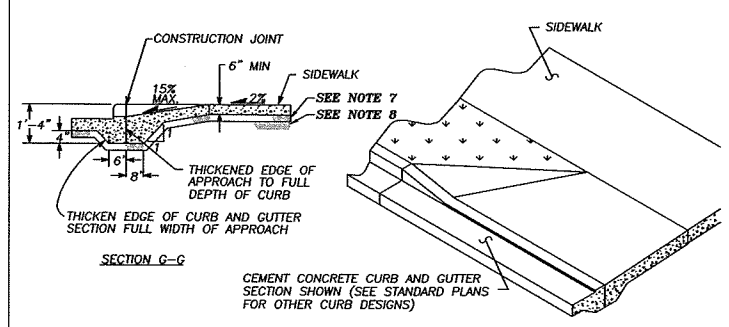

NO.	REVISIONS	DATE	BY
1	NOTE #6, 7, 8	10/09/02	SCH

DWG: F14.dwg

Department of Public Works
CLARK COUNTY WASHINGTON

DETAIL – TYPE 1
CEMENT CONCRETE APPROACH
APPROVED
Peter Capen 8/22/00
COUNTY ENGINEER DATE

F14
DESIGNED DD
DRAWN KB
DATE 7/24/00

TYPE 3 CONCRETE APPROACH

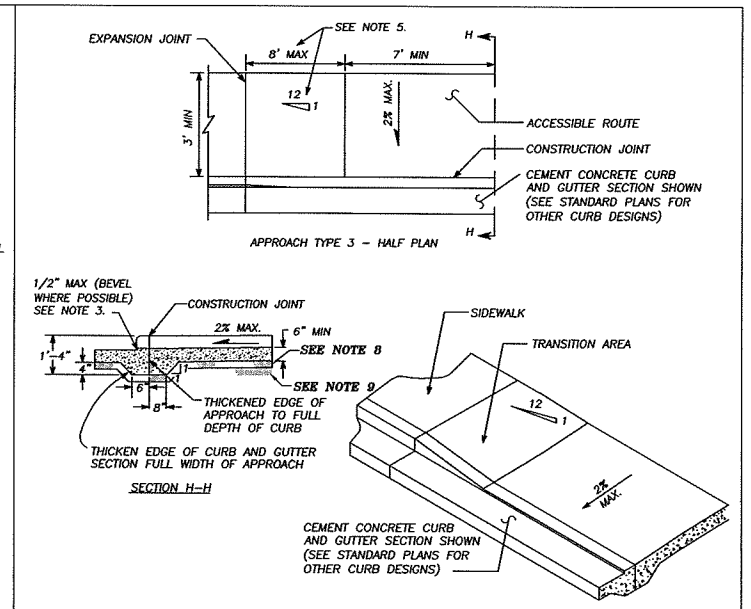

NOTES:
1. A MINIMUM 3' WIDE ACCESSIBLE ROUTE SHALL BE MAINTAINED IN ALL PEDESTRIAN ACCESSIBLE AREAS.
2. CONTRACTION JOINTS SHALL BE PLACED ALONG SIDEWALKS IN ACCORD WITH SIDEWALK DETAIL. ALL JOINTS SHALL BE CLEANED AND EDGED.
3. CHANGES IN LEVEL UP TO 1/4" MAY BE VERTICAL AND WITHOUT EDGE TREATMENT. CHANGES IN LEVEL BETWEEN 1/4" AND 1/2" SHALL BE BEVELED WITH A SLOPE NO GREATER THAN 2:1.
4. TRANSITION AREA TO BE SLOPED AT 1v TO 12h, UNLESS STREET GRADE WOULD CREATE A TRANSITION LENGTH GREATER THAN 8', THEN THE MAXIMUM LENGTH OF 8' GOVERNS SLOPE.
5. CEMENT CONCRETE APPROACHES SHALL BE CONSTRUCTED OF AIR-ENTRAINED CONCRETE CLASS 3000 AND MAY BE POURED INTEGRAL WITH CURB.
6. EXISTING CURB, GUTTER AND SIDEWALK TO BE SAWCUT AND REMOVED FOR INSTALLATION OF APPROACH.
7. COMMERCIAL DRIVEWAY REQUIRES REINFORCING STEEL (6"x6"x10 GA MESH) MIN. 3" COVER.
8. 3" DEPTH 3/4"-0 CRUSHED AGGREGATE BASE COMPACTED TO 95% OF MAX. DRY DENSITY.
9. SUBGRADE PREPARED PER WSDOT STD. SPEC. 2-06.3(1)

NO.	REVISIONS	DATE	BY
1	NOTE # 7, & 9	7/24/02	SCH

DWG: F16.dwg

Department of Public Works
CLARK COUNTY WASHINGTON

CEMENT CONCRETE APPROACH
DETAIL – TYPE 3
APPROVED
Peter Capen 8/22/00
COUNTY ENGINEER DATE

F16
DESIGNED DD
DRAWN KB
DATE 7/24/00

FOR INFORMATIONAL PURPOSES ONLY
ALL PLAN DETAIL AND INFORMATION IS NOT SHOWN ON THIS 90% COMPLETED SET OF PLANS.
90% SUBMITTAL - JULY 2004

DESIGNED: TSH
DRAWN: NPR/RAF
CRP: 330222
HOR. N/A
VERT. N/A
DATE: 7/2004
DWG:
SHEET 11 OF 99

CALL 48 HOURS BEFORE YOU DIG
1-800-553-4344
"It's the Law"
NORTHWEST UTILITIES NOTIFICATION CENTER

Harper Houf Peterson Righellis Inc.
ENGINEERS • PLANNERS • SURVEYORS
1104 MAIN STREET, SUITE 100, VANCOUVER, WA 98660
TEL 360.750.1131 www.hhpr.com FAX 360.750.1141

DESIGN & ENGINEERING DIVISION

NE 88TH STREET
DRIVEWAY DETAILS AND TABLE

proud past, promising future
CLARK COUNTY WASHINGTON

P:\Clk-12 (NE 88th)\CRK12-DWGS\ Crk12-Drive.DWG

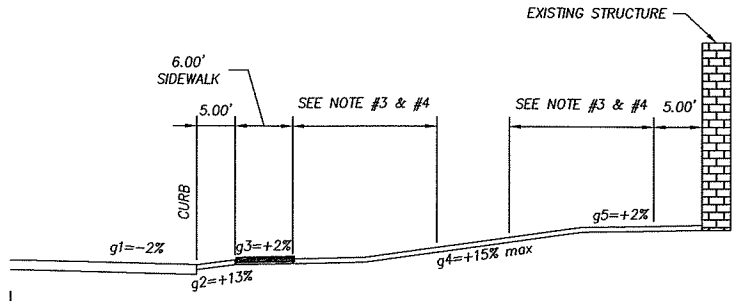

DETACHED SIDEWALK

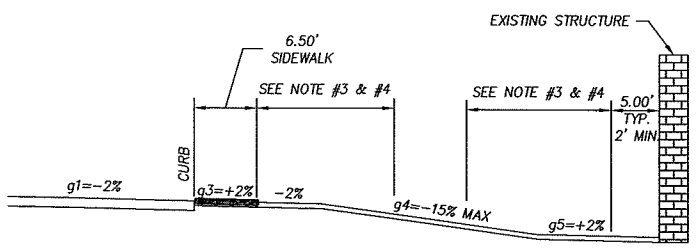

ATTACHED SIDEWALK

1. g3 MAX SLOPE 2%
2. g4 MAX SLOPE 15%
3. g3 AND g4, AND g4 AND g5 – USE 10' VERTICAL CURVE IF GRADE CHANGE IS 5% TO 10%. USE 15' VERTICAL CURVE IF GRADE CHANGE IS 10% OR GREATER.
4. g4 VERTICAL CURVE IS NOT REQUIRED IF GRADE CHANGE IS LESS THAN 5%.

TYPICAL DRIVEWAY PROFILE DETAIL

N.T.S.

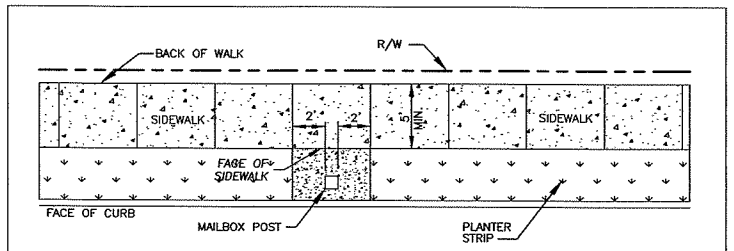

MAILBOX IN PLANTER STRIP

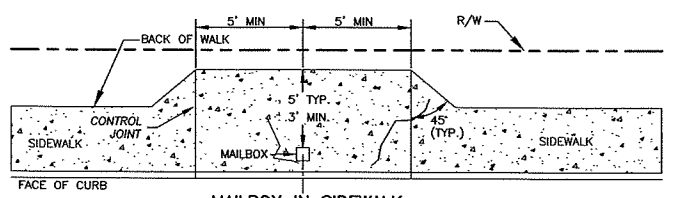

MAILBOX IN SIDEWALK

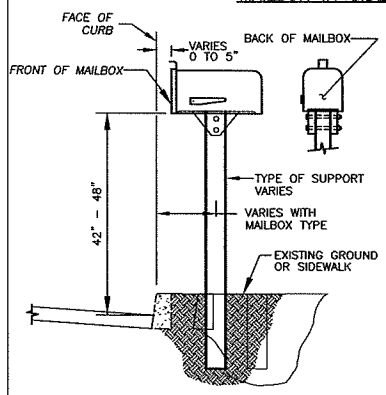

NOTES:

1. SEE CURRENT WSDOT STANDARD PLAN No. H-12 FOR MAILBOX, POST, BRACKET AND OTHER INSTALLATION DETAILS.
2. MAILBOXES MUST BE POSTMASTER APPROVED. CONTACT MIKE WENTZEL (MAINTENANCE MANAGER) AT 992-5052.
3. LOCATION OF MAILBOXES ARE SUBJECT TO APPROVAL BY COUNTY ENGINEERING FOR ACCESS AND SIGHT DISTANCE REQUIREMENTS. CONTACT ENGINEERING SERVICES AT 397-2375 ext. 4997
4. INSTALL EXPANSION JOINT MATERIAL AROUND MAILBOX POST WHEN SET IN SIDEWALK.
5. EXTEND SIDEWALK JOINTS THROUGH WIDENED SIDEWALK SECTION.
6. COLLECTION BOX UNITS (CBU) AND CONCRETE BASE ARE INSTALLED BY THE U.S. POSTAL SERVICE. SEE NOTE 2 FOR CONTACT.
7. A MAILBOX TURNOUT CONFORMING TO DETAIL F13b IS REQUIRED FOR ALL STREETS EXCEPT ACCESS AND SUBCOLLECTOR STREETS WHERE THE POSTED SPEED LIMIT IS 25 MPH OR LESS.

WSDOT STD. PLANS WEB SITE ADDRESS:
http://www.wsdot.wa.gov/eesc/design/designstandards/HTM/TOC.pdf

NO.	REVISIONS	DATE	BY

DWG: F13.DWG

Department of Public Works
CLARK COUNTY WASHINGTON
proud past, promising future

SIDEWALK MAILBOX PLACEMENT

APPROVED
Peter Capen — COUNTY ENGINEER — 01/01/04 DATE

STANDARD F13
PLAN No.
DESIGNED SCH
DRAWN SCH
DATE 07/31/02

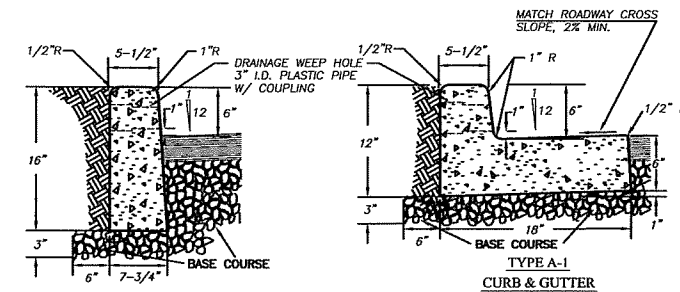

TYPE E-1 CURB

SEE WDOT STANDARD PLAN No. F-1

TYPE A-1 CURB & GUTTER

SEE WDOT STANDARD PLAN No. F-1

NOTES

1. CONCRETE SHALL BE 3000 PSI MIN. (CLASS 3000) 3 1/2" SLUMP (MAX.)
2. CURBS ADJACENT TO PAVEMENT OR SIDEWALK TO HAVE EXPANSION AND/OR CONTRACTION JOINTS TO MATCH EXISTING PATTERNS.
3. 3/8" EXPANSION JOINTS TO BE PROVIDED AT EACH POINT OF TANGENCY OF THE CURB, COLD JOINTS, EACH SIDE OF INLET STRUCTURES AND DRIVEWAYS. MATERIAL TO BE PRE-MOLDED, ASPHALT IMPREGNATED AND NON EXTRUDING.
4. CONTRACTION JOINT SPACING NOT TO EXCEED 15 FEET. THE DEPTH OF THE JOINT SHALL BE AT LEAST 1-1/2 INCHES. WEEP HOLES TO BE CENTERED WITH CONTRACTION JOINTS.
5. BASE COURSE SHALL BE TO SUBGRADE OF STREET SECTION OR 3 INCHES, WHICHEVER IS GREATER, AND SHALL EXTEND 6" BEHIND THE CURB.
6. DRAINAGE WEEP HOLES TO BE 3" I.D. PLASTIC PIPE WITH COUPLING. FINISH PIPE END FLUSH WITH FACE OF CURB.
7. GROUT ANY VOIDS IN CONCRETE SURROUNDING PIPE.
8. DRAINAGE ACCESS THROUGH EXISTING CURBS SHALL BE CORE DRILLED.
9. CURB TO BE BRUSH FINISHED. ALL EXISTING EDGES SHALL BE SAWCUT.
10. ALL MATERIALS AND WORKMANSHIP FOR TYPE E-1 & A-1 SHALL BE IN ACCORDANCE WITH WDOT STANDARD PLAN No. F-1, APPROVED 7/18/97 OR MOST CURRENT REVISION.

NO.	REVISIONS	DATE	BY

DWG: F18.DWG

Department of Public Works
CLARK COUNTY WASHINGTON
proud past, promising future

CONCRETE CURBS

APPROVED
Peter Capen — COUNTY ENGINEER — 01/01/04 DATE

STANDARD F18
PLAN No.
DESIGNED SCH
DRAWN SCH
DATE 07/24/02

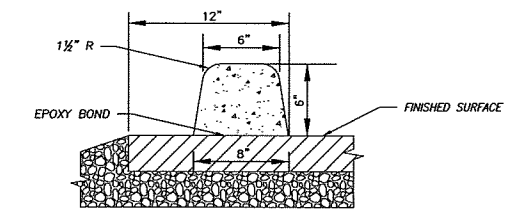

EXTRUDED CONCRETE BONDED CURB

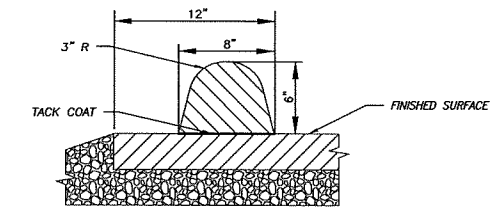

EXTRUDED AC BONDED CURB

NOTES:

1. CONCRETE SHALL BE 3000 PSI MIN., (CL 3000) 3-1/2" SLUMP (MAX.).
2. THE EPOXY RESIN SYSTEM SHALL BE FURNISHED IN THE TYPE, GRADE, AND CLASS AS SPECIFIED ACCORDING TO CURRENT ASTM C 881.
3. CONCRETE CURBS ADJACENT TO PAVEMENT OR SIDEWALK TO HAVE EXPANSION AND/OR CONSTRUCTION JOINTS TO MATCH EXISTING PATTERNS.
4. FOR CONCRETE CURBS 3/8" EXPANSION JOINTS SHALL BE PLACED AT 45' MAXIMUM SPACING, ON BOTH SIDES OF CATCH BASINS, AT TOPS OF DRIVEWAYS, AND ALL CHANGES IN DIRECTION. 1 1/2" CONTRACTION JOINTS TO BE PLACED AT 10' INTERVALS.
5. USE OF EXTRUDED CURB REQUIRES PRE-APPROVAL BY COUNTY ENGINEER.

NO.	REVISIONS	DATE	BY

DWG: F18a.DWG

Department of Public Works
CLARK COUNTY WASHINGTON
proud past, promising future

EXTRUDED CURBS

APPROVED
Peter Capen — COUNTY ENGINEER — 01/01/04 DATE

STANDARD F18a
PLAN No.
DESIGNED SCH
DRAWN SCH
DATE 07/30/02

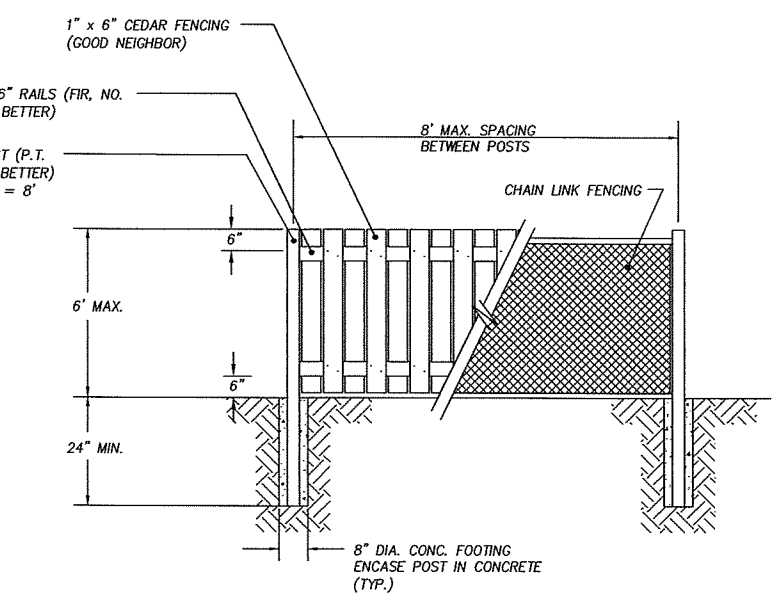

FENCE NOTES:

1. USE 2-NO. 16 (TOP & BOTTOM) GALVANIZED NAILS TO FASTEN FENCING TO RAIL.
2. OVERLAP FENCE BOARD EDGE (1/4").
3. USE GALVANIZED RAIL CLIP TO FASTEN RAIL TO POST.
4. CHAIN LINK FENCE SHALL BE TYPE CL-6 BLACK VINYL COATED STEEL. FENCE SHALL BE 4' TALL OR MATCH EXISTING HEIGHT.
5. FIELD LOCATE AND INSTALL GATE OPENINGS AS INDICATED ON THE PLANS. COORDINATED WITH THE INSPECTOR PRIOR TO CONSTRUCTION.

FENCING

N.T.S.

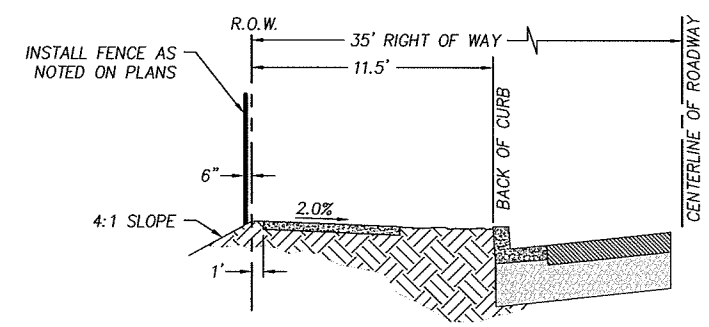

PRIVATE FENCE PLACEMENT DETAIL

N.T.S.

FOR INFORMATIONAL PURPOSES ONLY

ALL PLAN DETAIL AND INFORMATION IS NOT SHOWN ON THIS 90% COMPLETED SET OF PLANS.

90% SUBMITTAL - JULY 2004

DESIGNED:	TSH
DRAWN:	NPR
CRP:	330222
HOR.	N/A
VERT.	N/A
DATE:	7/2004
DWG:	
SHEET	12 OF 99

CALL 48 HOURS BEFORE YOU DIG
1-800-553-4344
"It's the Law"
NORTHWEST UTILITIES NOTIFICATION CENTER

Harper Houf Peterson Righellis Inc.
ENGINEERS • PLANNERS • SURVEYORS
1104 MAIN STREET, SUITE 100, VANCOUVER, WA 98660
TEL 360.750.1131 www.hhpr.com FAX 360.750.1141

DESIGN & ENGINEERING DIVISION

NE 88TH STREET DETAILS

proud past, promising future
CLARK COUNTY WASHINGTON

P:\Clrk-12 NE 88th\\CRK12-DWGS\ Clrk12-D703.DWG

Ⓐ Standard cast iron frame and cover. Use the following Sioux Chief Mfg. Co., Inc. Toupee plus adjustable cleanout item numbers or approved equal:

851-44i (4" PVC)
851-46i (6" PVC)
851-34i (4" ABS)

Commercial cleanouts to have "S" or "SAN" embossed in lid.

Ⓑ Concrete shall be 3,000 P.S.I.

Ⓒ Bedding and backfill to conform with class of bedding and type of backfill specified for sewer line extension.

Ⓓ 2-45° bends.

Ⓔ Install 50# felt between pipe and concrete.

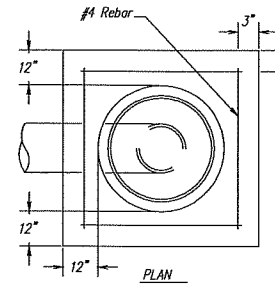

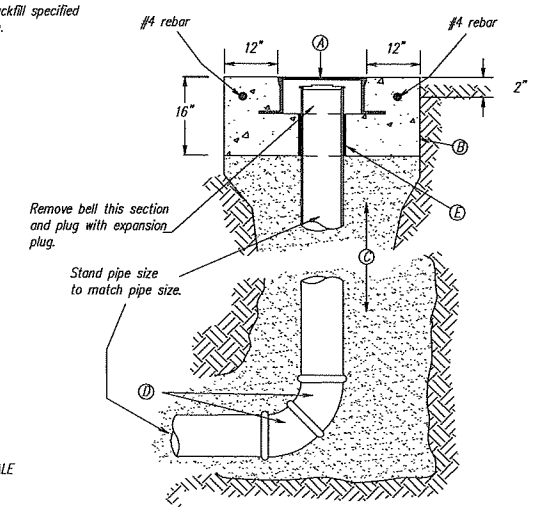

NO SCALE

HAZEL DELL SEWER DISTRICT

CLEANOUT DETAIL

Approved For Project Use
Revised 6/27/00

HAZEL DELL SEWER DISTRICT
STANDARD CONSTRUCTION DRAWINGS

9

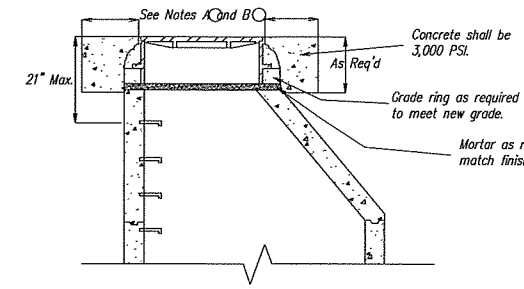

① Steps not allowed in grade rings. If grade rings raise distance to more than 21", a new precast manhole section must be installed below the cone.

② pavement to be sawcut in a diamond shape to raise manhole casting to new finished grade.

③ Metal grade rings are not allowed between frame and cover.

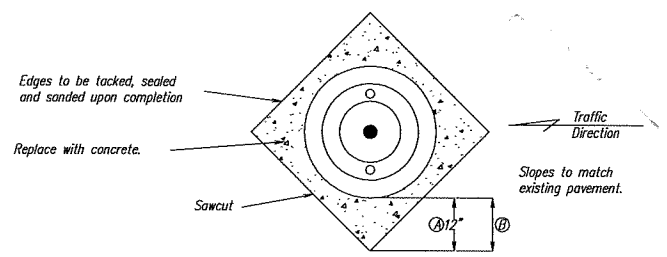

PLAN VIEW

Pattern for pavement cutting to raise manhole casting.

Ⓐ If grade rings can be used.

Ⓑ As needed if precast manhole section is required to raise to grade.

HAZEL DELL SEWER DISTRICT

MANHOLE ADJUSTMENT

Approved For Project Use
Revised 6/27/2000

HAZEL DELL SEWER DISTRICT
STANDARD CONSTRUCTION DRAWINGS

17

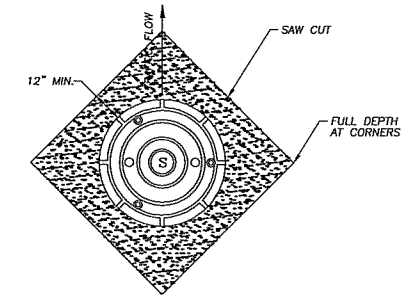

PLAN VIEW

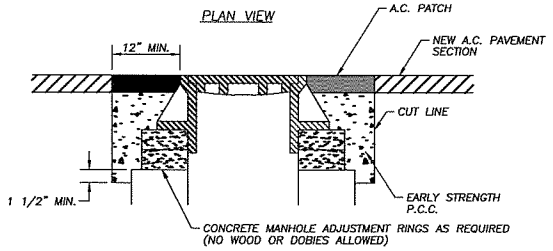

STEPS 2,3, & 4

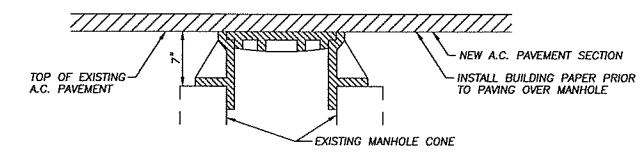

STEP 1

STEP 1 COVER EXSITING MANHOLE WITH BUILDING PAPER AND CONSTRUCT A.C. PAVEMENT OVER TOP OF MANHOLE.
STEP 2 SAW CUT AND REMOVE PAVEMENT AROUND MANHOLE 12" MIN. FROM MANHOLE FRAME.
STEP 3 RAISE MANHOLE FRAME AND COVER USING CONCRETE RINGS AND MECHANICAL ADJUSTMENT DEVICES TO FINISH GRADE MATCHING PROFILE AND CROSS SLOPE.
STEP 4 BACKFILL WITH EARLY STRENGTH P.C.C. AND A.C. TO DEPTHS AS DIRECTED.

DWG: F27.dwg

NO.	REVISIONS	DATE	BY

Department of Public Works
CLARK COUNTY WASHINGTON

MANHOLE ADJUSTMENT DETAIL

APPROVED
Peter Capew 9/12/00
COUNTY ENGINEER DATE

F27

DESIGNED
DRAWN
DATE 7/20/00

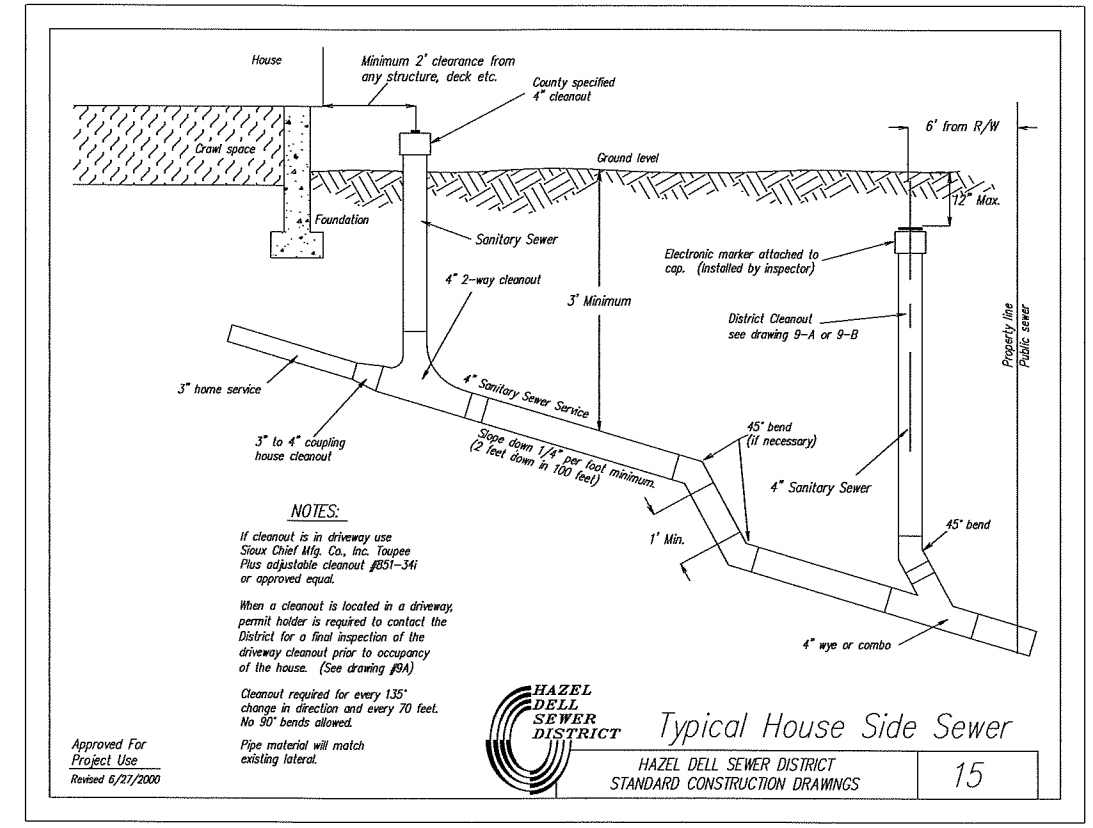

NOTES:

If cleanout is in driveway use Sioux Chief Mfg. Co., Inc. Toupee Plus adjustable cleanout #851-34i or approved equal.

When a cleanout is located in a driveway, permit holder is required to contact the District for a final inspection of the driveway cleanout prior to occupancy of the house. (See drawing #9A)

Cleanout required for every 135° change in direction and every 70 feet. No 90° bends allowed.

Pipe material will match existing lateral.

HAZEL DELL SEWER DISTRICT

Typical House Side Sewer

Approved For Project Use
Revised 6/27/2000

HAZEL DELL SEWER DISTRICT
STANDARD CONSTRUCTION DRAWINGS

15

FOR INFORMATIONAL PURPOSES ONLY

ALL PLAN DETAIL AND INFORMATION IS NOT SHOWN ON THIS 90% COMPLETED SET OF PLANS.

90% SUBMITTAL - JULY 2004

FOR USE AT POINTS OF TANGENCY

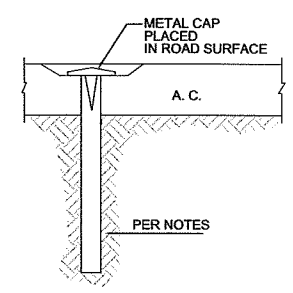

FOR USE IN INTERSECTIONS

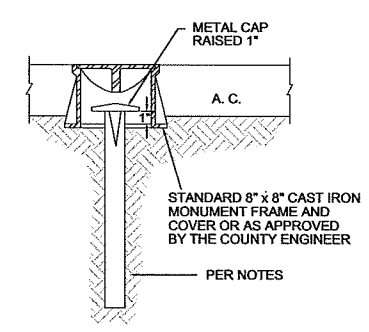

NOTES:

1. ALL MONUMENTS SHALL USE EITHER 5/8" DIAMETER x 30" LONG IRON ROD OR 3/4" DIAMETER x 30" LONG IRON PIPE.
2. ALL MONUMENTS SHALL BE IN ACCORDANCE WITH WAC 196-24-110 AND 332-120-060, AND MEET THE REQUIREMENTS OF THE RCW 58.17.240, 58.09.120 AND 58.09.130.

DWG: F28.DWG

NO.	REVISIONS	DATE	BY

Department of Public Works
CLARK COUNTY WASHINGTON
proud past, promising future

CENTERLINE MONUMENTS

APPROVED
Peter Capew 01/01/04
COUNTY ENGINEER DATE

F28

DESIGNED SCH
DRAWN SCH
DATE 07/30/03

DESIGNED:	TSH
DRAWN:	NPR
CRP:	330222
HOR.	N/A
VERT.	N/A
DATE:	7/2004
DWG:	
SHEET	13 OF 99

CALL 48 HOURS BEFORE YOU DIG
1-800-553-4344
"It's the Law"
NORTHWEST UTILITIES NOTIFICATION CENTER

Harper Houf Peterson Righellis Inc.
ENGINEERS • PLANNERS • SURVEYORS
1104 MAIN STREET, SUITE 100, VANCOUVER, WA 98660
TEL 360.750.1131 www.hhpr.com FAX 360.750.1141

DESIGN & ENGINEERING DIVISION

NE 88TH STREET DETAILS

proud past, promising future
CLARK COUNTY WASHINGTON

P:\Clk-12 NE 88th\CRK12-DWGS\ Crk12-DT04.DWG

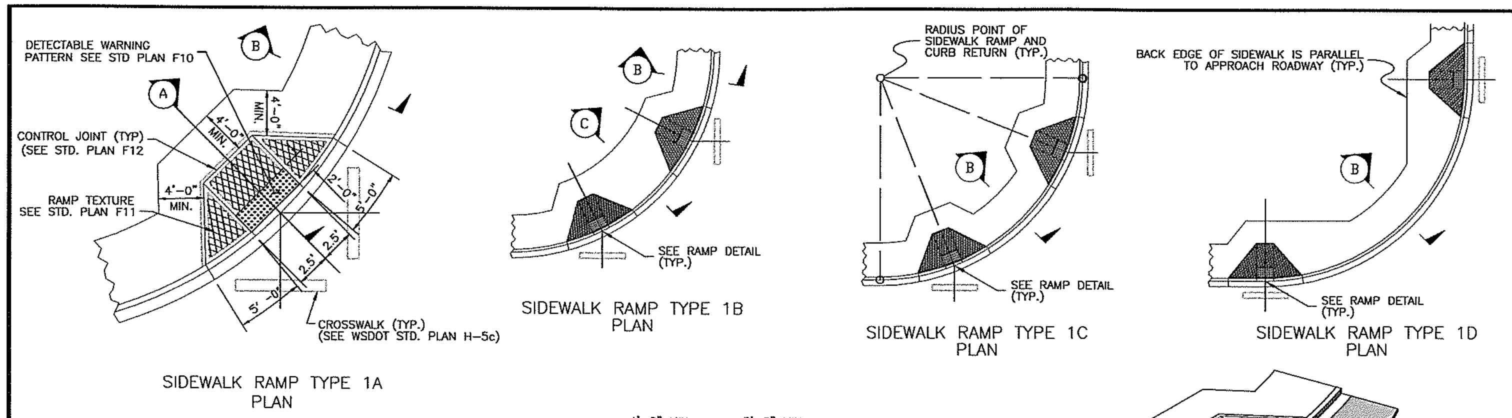

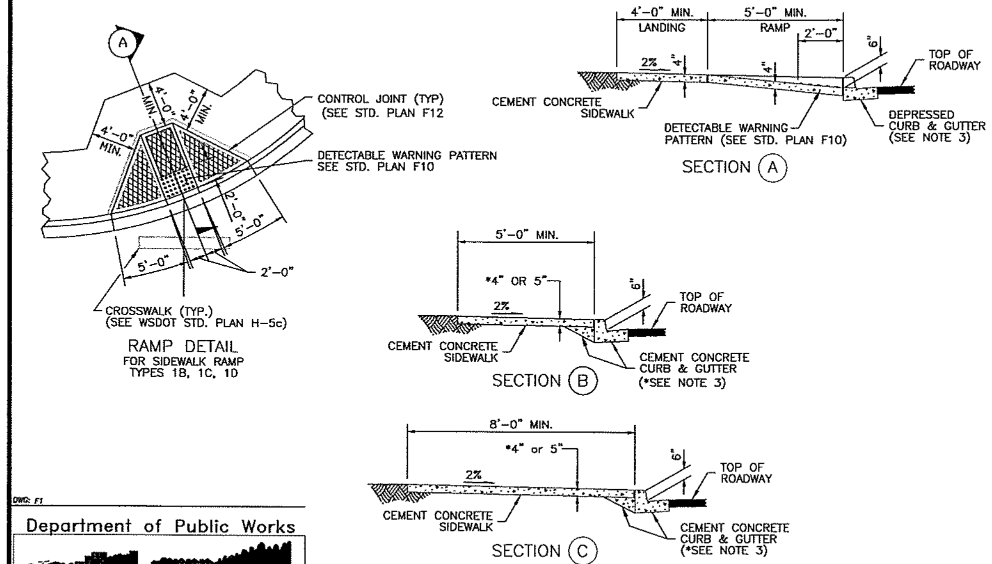

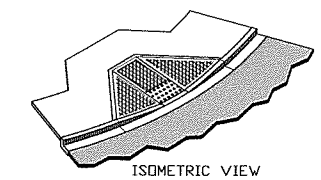

NOTES

1. Avoid placing drainage structures, junction boxes or other obstructions in front of ramp access areas.
2. Detectable warning patterns may be created by any method that will achieve the truncated dome dimensions and spacing shown.
3. Curb and gutter shown, see Construction Plans for the curb design specified. See Std. Plan F18 for standard curb details, and std. plan F18b for rolled curb & gutter with THICKENED SIDEWALK.
4. The plan views for SIDEWALK RAMP TYPES 1B, 1C & 1D are provided to define each ramp type. See the RAMP DETAIL on this sheet. See Std. Plan F12 for sidewalk joint placement and details.
5. Ramp slopes shall not be steeper than 12H:1V.
6. For Arterials and Collectors use WSDOT Standard Plan F-3a.

Department of Public Works — CLARK COUNTY WASHINGTON

SIDEWALK RAMP TYPES 1A, 1B, 1C, & 1D — APPROVED — COUNTY ENGINEER — 01/01/04 DATE — F1 — DESIGNED SCH, DRAWN SCH, DATE 11/14/03

NEW CONSTRUCTION
FOR USE WITH SIDEWALKS LOCATED ANYWHERE IN THE RIGHT-OF-WAY

NOTES:

1. RAMPS TO BE POURED SEPARATELY FROM SIDEWALK.
2. CROSSWALKS TO BE CENTERED ON SIGNAL POLE TO POLE CENTERLINES. CURB RAMP TO BE CENTERED WITHIN CROSSWALK.
3. SIDEWALK SLOPE TO BE 2% MAXIMUM RADIALLY AROUND CORNER SECTION. SINGLE RAMPS CAN BE INSTALLED.
4. RAMP SLOPES SHALL NOT BE STEEPER THAN 12H:1V.

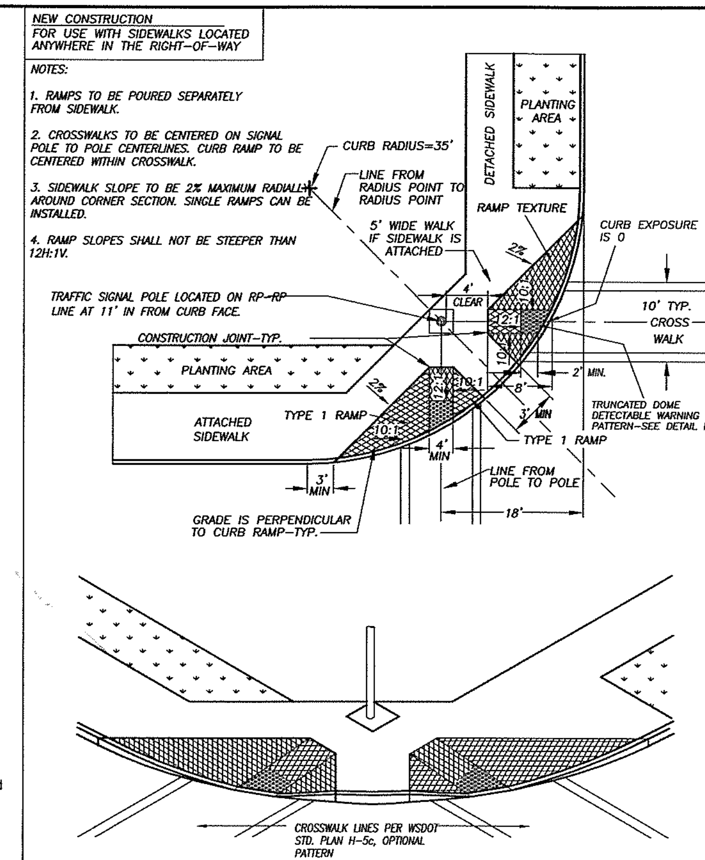

Department of Public Works — CLARK COUNTY WASHINGTON

TYPE 2 RAMP — APPROVED — COUNTY ENGINEER — 8/22/00 DATE — F2 — REVISIONS: 1 TRUNCATED DOMES 6/14/03 SCH — DESIGNED DB, DRAWN KB, DATE 7/24/00

FOR INFORMATIONAL PURPOSES ONLY
ALL PLAN DETAIL AND INFORMATION IS NOT SHOWN ON THIS 90% COMPLETED SET OF PLANS.
90% SUBMITTAL - JULY 2004

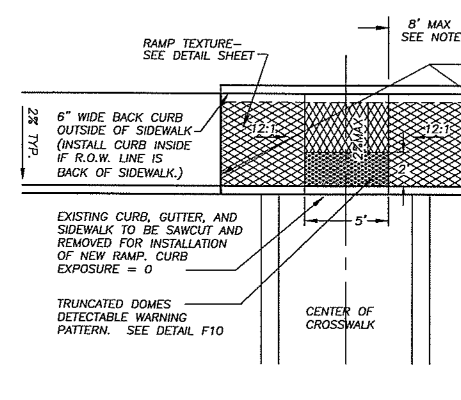

NOTES:

1. RAMPS TO BE POURED SEPARATELY FROM SIDEWALK.
2. RAMP TO BE CENTERED IN CROSSWALK.
3. RAMP RUNS TO BE 12:1 SLOPE UNLESS LENGTH WOULD EXCEED 8 FEET, THEN 8' LENGTH GOVERNS.
4. BACK CURB IS STANDARD BARRIER CURB.

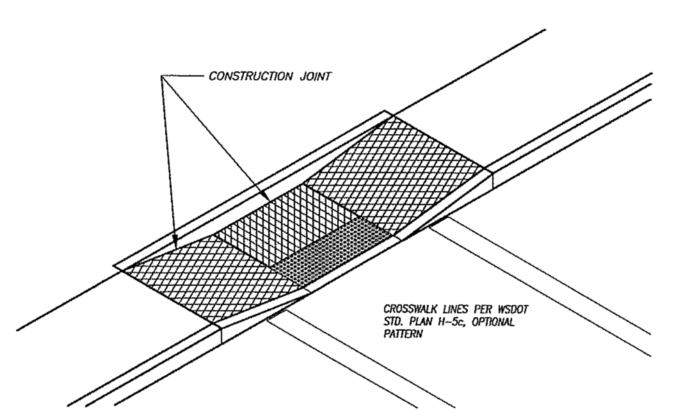

Department of Public Works — CLARK COUNTY WASHINGTON

TYPE 3 RAMP — APPROVED — COUNTY ENGINEER — 8/22/00 DATE — F3 — REVISIONS: 1 TRUNCATED DOME PATTERN 6/15/03 SCH — DESIGNED DB, DRAWN KB, DATE 7/24/00

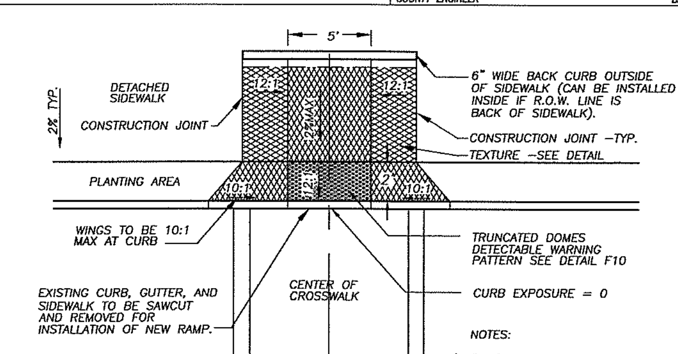

NOTES:

1. RAMPS TO BE POURED SEPARATELY FROM SIDEWALK.
2. CENTER RAMP ON CENTERLINE OF CROSSWALK.
3. BACK CURB IS TYPE E-1 PER STD. PLAN F18.
4. RAMP SLOPES SHALL NOT BE STEEPER THAN 12H:1V.

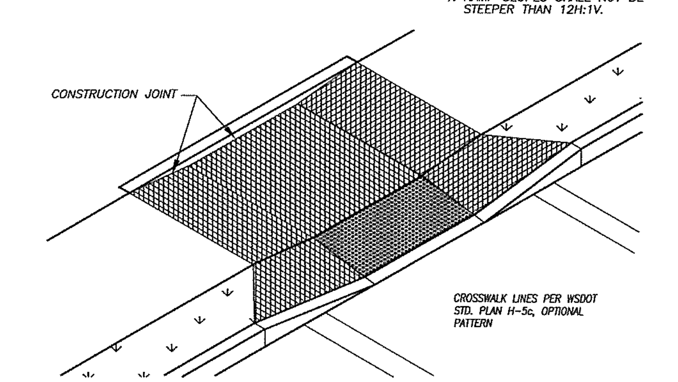

Department of Public Works — CLARK COUNTY WASHINGTON

TYPE 4 RAMP — APPROVED — COUNTY ENGINEER — 8/22/00 DATE — F4 — REVISIONS: 1 TRUNCATED DOME PATTERN 6/14/03 SCH — DESIGNED DB, DRAWN KB, DATE 7/24/00

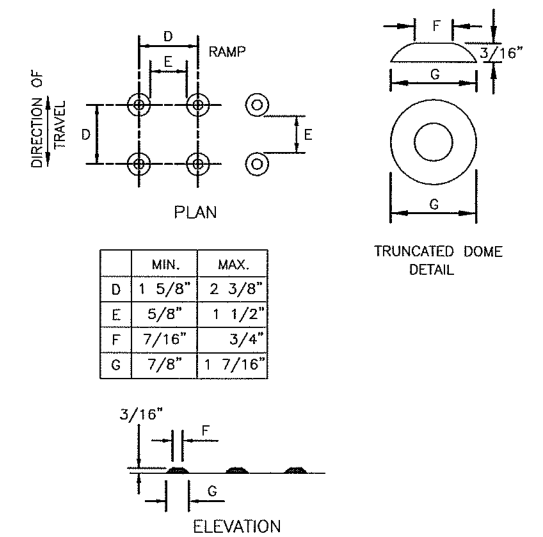

	MIN.	MAX.
D	1 5/8"	2 3/8"
E	5/8"	1 1/2"
F	7/16"	3/4"
G	7/8"	1 7/16"

TRUNCATED DOMES (SEE NOTE 2)
DETECTABLE WARNING
PATTERN DETAIL

NOTES

1. AVOID PLACING DRAINAGE STRUCTURES, JUNCTION BOXES OR OTHER OBSTRUCTIONS IN FRONT OF RAMP ACCESS AREA.
2. THE DETECTABLE WARNING PATTERNS CAN BE CREATED BY ACCEPTABLE MEANS THAT WILL ACHIEVE THE TRUNCATED DOME DIMENSIONS AND SPACING SHOWN.
3. PLACE TRUNCATED DOME DETECTABLE WARNING TEXTURE IN THE LOWER 24" OF THE THROAT OF THE RAMP ONLY. ARRANGE DOMES USING IN-LINE PATTERN ONLY AS SHOWN. COLOR OF TEXTURE (COATING) SHALL BE SAFETY YELLOW IN COMPLIANCE WITH WSDOT STD. SPEC. OR AS INSTRUCTED BY COUNTY INSPECTOR.
4. FOR CONSTRUCTION OF SIDEWALK RAMPS OUTSIDE OF PUBLIC RIGHT-OF-WAY, CHECK WITH STATE BUILDING CODES.

Department of Public Works — CLARK COUNTY WASHINGTON — proud past, promising future

TRUNCATED DOME DETECTABLE WARNING PATTERN — APPROVED — COUNTY ENGINEER — 01/01/04 DATE — STANDARD PLAN No. F10 — DESIGNED SCH, DRAWN SCH, DATE 6/15/03

JOINT SPACING:
SURFACE JOINTS – 5'
CONTROL JOINTS – 15'
EXPANSION JOINTS AT, STRUCTURES, OBSTRUCTIONS, OR AS DIRECTED BY THE INSPECTOR.

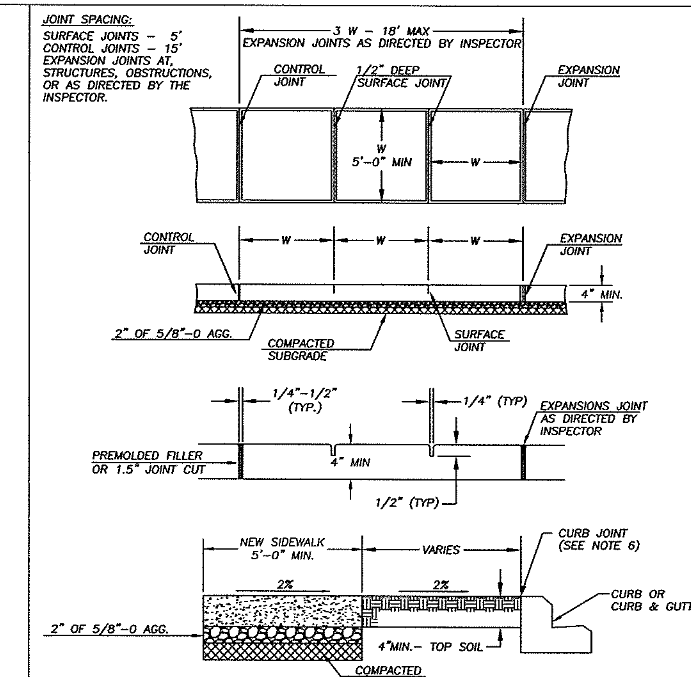

NOTES:

1. CONCRETE SHALL BE 3,000 PSI MIN. (CLASS 3000), 3 1/2" SLUMP (± 1")
2. FINISH SHALL BE MEDIUM BROOM PERPENDICULAR TO PEDESTRIAN TRAFFIC UNLESS OTHERWISE DIRECTED.
3. ALL EXISTING EDGES SHALL BE SAWCUT.
4. NO FILLER REQUIRED FOR SURFACE JOINTS.
5. ALL JOINTS AND EDGES SHALL BE FINISHED WITH 1/4" RADIUS EDGER (3" SMOOTH EACH SIDE)
6. FOR SIDEWALKS ADJACENT TO THE CURB AND POURED AT THE SAME TIME AS THE CURB, THE JOINT BETWEEN THEM SHALL BE A TROWELED JOINT WITH A MIN. 1/2" RADIUS.

Department of Public Works — CLARK COUNTY WASHINGTON — proud past, promising future

SIDEWALK DETAIL — APPROVED — COUNTY ENGINEER — 01/01/04 DATE — STANDARD PLAN No. F12 — REVISIONS: 1 CHANGE SUBGRADE & 03/28/02 KB; 2 + 2" BASE AGG. & NOTES 10/07/02 SCH — DESIGNED DB, DRAWN KB, DATE 10/08/02

CLARK COUNTY WASHINGTON — proud past, promising future

DESIGN & ENGINEERING DIVISION

NE 88TH STREET SIDEWALK DETAILS

Harper Houf Peterson Righellis Inc.
ENGINEERS • PLANNERS • SURVEYORS
1104 MAIN STREET, SUITE 100, VANCOUVER, WA 98660
TEL 360.750.1131 www.hhpr.com FAX 360.750.1141

CALL 48 HOURS BEFORE YOU DIG
1-800-553-4344
"It's the Law"
NORTHWEST UTILITIES NOTIFICATION CENTER

DESIGNED:	TSH
DRAWN:	NPR
CRP:	330222
HOR.	N/A
VERT.	N/A
DATE:	7/2004
DWG:	
SHEET 14 OF 99	

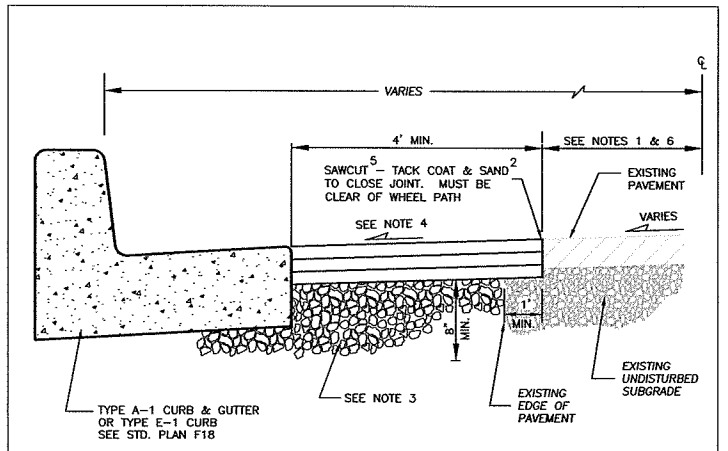

NOTES:

1. WHERE FRONTAGE IMPROVEMENTS ARE REQUIRED, THE COUNTY WILL PERFORM PAVEMENT DEFLECTION TESTING TO DETERMINE THE EXTEND OF IMPROVEMENTS. SEE CCC 40.350.030(B)(5) FRONTAGE ROADS/IMPROVEMENTS.
2. THE EDGES OF ALL EXISTING ASPHALT SURFACES SHALL BE SAWCUT TO PROVIDE A STRAIGHT, CLEAN EDGE. A TACK COAT SHALL BE APPLIED PER THE STANDARD SPECIFICATIONS. ALL JOINTS SHALL BE SEALED WITH CRS-1 AND SANDED.
3. DEPTH OF ASPHALT CONCRETE PAVEMENT AND BASE ROCK OF THE RESTORED ROAD SECTION TO BE PER TYPICAL ROADWAY SECTION AS SHOWN IN THE TRANSPORTATION STANDARD DRAWINGS 1 THROUGH 27, OR AS APPROVED BY REVIEWING AUTHORITY. COMPACT SUBGRADE AND CRUSHED AGGREGATE TO 95% OF MAXIMUM DRY DENSITY.
4. MATCH EXISTING PAVEMENT SLOPE. NO FLATTER THAN 2% OR STEEPER THAN 4% WITHOUT SPECIFIC COUNTY APPROVAL.
5. SAWCUT AND REMOVE ANY EXISTING FAILING ASPHALT CONCRETE PAVEMENT.
6. SAWCUT, REMOVE AND RESTORE A MINIMUM OF 1' TO A MAXIMUM HALF STREET WIDTH OF THE EXISTING ROAD SECTION.
7. PAVE WITH MINIMUM OF 0.35 ft. MINIMUM COMPACTED DEPTH A.C.P., OR MATCH EXISTING OR DESIGN SECTION WHICHEVER IS GREATER.
8. LIFTS FOR A.C.P. (CLASS A) SHALL BE INSTALLED AT 0.15 ft. MINIMUM AND 0.35 ft. MAXIMUM FOR NON-SURFACE LIFTS, AND 0.25 ft. MAXIMUM FOR THE FINAL SURFACE LIFT. THE TEMPERATURE SHALL BE 250 DEGREE MINIMUM AND 350 DEGREE MAXIMUM, AND COMPACTED TO 92% OF THEORETICAL MAXIMUM.

NO.	REVISIONS	DATE	BY

DWG: F30.DWG

Department of Public Works
CLARK COUNTY WASHINGTON
proud past, promising future

PAVEMENT WIDENING
(FRONTAGE IMPROVEMENT)

APPROVED
PETER CAPELLI
COUNTY ENGINEER
01/01/04
DATE

STANDARD
F30
PLAN No.
DESIGNED: SCH
DRAWN: SCH
DATE: 07/31/02

FOR INFORMATIONAL PURPOSES ONLY

ALL PLAN DETAIL AND INFORMATION IS NOT SHOWN ON THIS 90% COMPLETED SET OF PLANS.

90% SUBMITTAL - JULY 2004

DESIGNED:	TSH
DRAWN:	NPR
CRP:	330222
HOR:	N/A
VERT.	N/A
DATE:	7/2004
DWG:	
SHEET 15 OF 99	

CALL 48 HOURS BEFORE YOU DIG
1-800-553-4344
"It's the Law"
NORTHWEST UTILITIES NOTIFICATION CENTER

Harper Houf Peterson Righellis Inc.
ENGINEERS • PLANNERS • SURVEYORS
1104 MAIN STREET, SUITE 100, VANCOUVER, WA 98660
TEL 360.750.1131 www.hhpr.com FAX 360.750.1141

DESIGN & ENGINEERING DIVISION

NE 88TH STREET
PAVEMENT WIDENING DETAILS

proud past, promising future
CLARK COUNTY WASHINGTON

P:\Ck-12 (NE 88th)\CRK12-DWGS\ Ck12-DTM.DWG

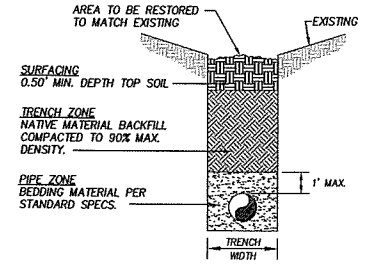

NATIVE BACKFILL -OUTSIDE ROADWAY PRISM-

(TYPE 'A' RESTORATION)

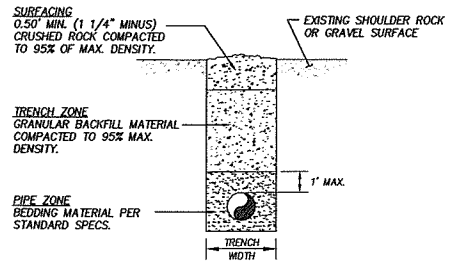

ROADWAY SHOULDERS, GRAVEL SURFACE

(TYPE 'B' RESTORATION)

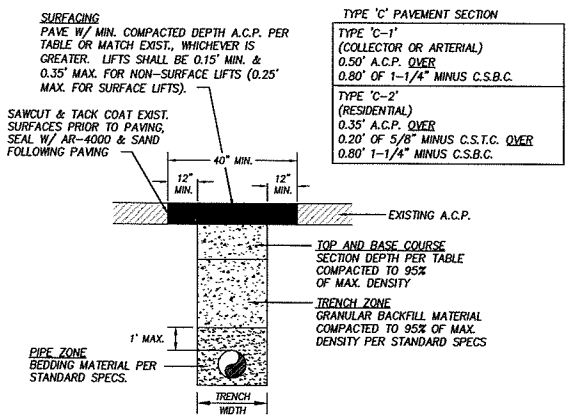

TYPE 'C' PAVEMENT SECTION

TYPE 'C-1' (COLLECTOR OR ARTERIAL) 0.50' A.C.P. OVER 0.80' OF 1-1/4" MINUS C.S.B.C.
TYPE 'C-2' (RESIDENTIAL) 0.35' A.C.P. OVER 0.20' OF 5/8" MINUS C.S.T.C. OVER 0.80' 1-1/4" MINUS C.S.B.C.

ASPHALT CONCRETE PAVEMENT

(TYPE 'C-1' & 'C-2' RESTORATION)

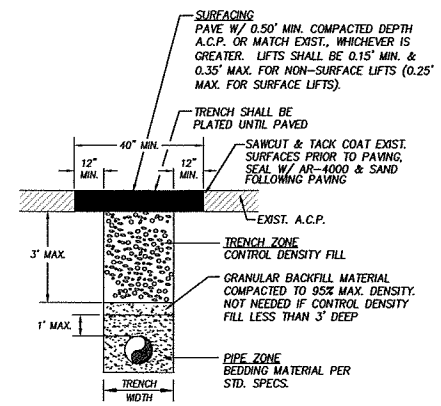

CONTROL DENSITY FILL -A.C.P.-

(TYPE 'D' RESTORATION)

TRENCHING NOTES:

1. SEE CLARK COUNTY UTILITY PERMIT FOR ADDITIONAL TRENCH BACKFILL AND SURFACING REQUIREMENTS.
2. NATIVE MATERIALS MAY BE SUBSTITUTED FOR IMPORTED GRANULAR MATERIAL PROVIDING IT IS PRE-APPROVED BY THE COUNTY ENGINEER OR AUTHORIZED REPRESENTATIVE.
3. TRENCH EXCAVATION, BEDDING, AND BACKFILL FOR WATER MAINS SHALL BE IN ACCORDANCE WITH SECTION 7-10 OF THE MOST CURRENT STANDARD SPECIFICATIONS. BED PIPE PER SECTION 7-10.3(9) OF THE STANDARD SPECIFICATIONS.
4. IN THE TRENCH ZONE, USE METHOD C COMPACTION PER SECTION 2-03.3(14).

TRENCH ZONE WIDTH
PIPE 8 IN. OR MORE = PIPE O.D. +2 FT.
PIPE 6 IN. OR LESS = PIPE O.D. +1 FT.
OR AS DIRECTED BY THE ENGINEER

TABLE APPLIES TO ALL TRENCH DETAILS ON THIS SHEET

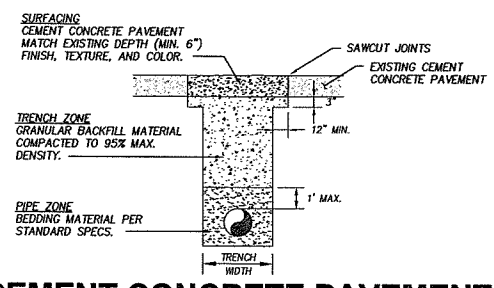

CEMENT CONCRETE PAVEMENT

(TYPE 'E' RESTORATION)

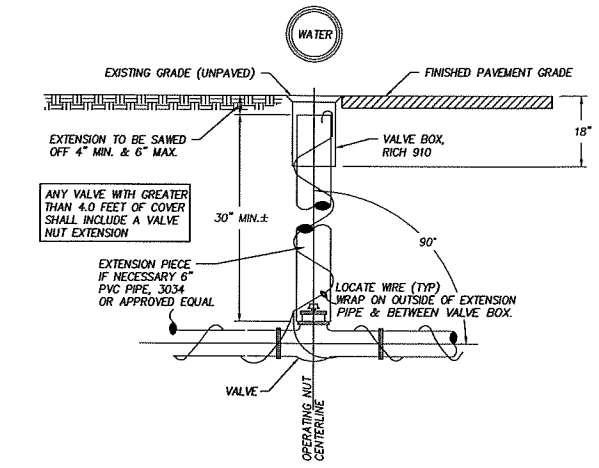

STANDARD VALVE BOX

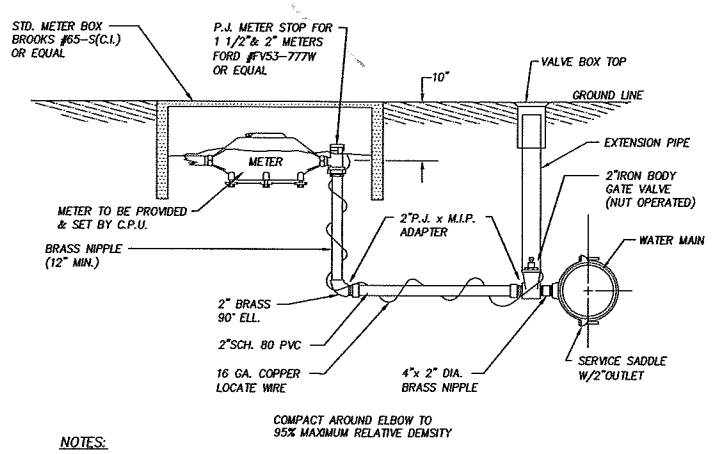

NOTES:

1. CONTRACTOR SHALL CONTACT P.U.D. CONSTRUCTION MANAGER'S OFFICE (944-8020) 48 HRS. PRIOR TO INSTALLING ANY STUBS.
2. CONTRACTOR IS HELD RESPONSIBLE TO AVOID CONFLICT WITH OTHER UTILITIES BY CO-ORDINATION OF LOCATION. "ONE-CALL" 696-4848.
3. NO CONNECTIONS WILL BE ALLOWED TO AN EXISTING SERVICE PRIOR TO AN APPROVED PURITY TEST. PURITY TEST SHALL PRECEDE PRESSURE TEST.
4. STUB SERVICES SHALL BE PRESSURE TESTED WITH THE MAIN LINE AND BE CAPABLE OF WITH-STANDING THE MAINS TEST PRESSURE.
5. APPROVED EQUAL APPLIES ON ALL MATERIAL CALL OUTS.
6. ALL COMPRESSION FITTINGS TO HAVE STAINLESS STEEL INSERTS.

STANDARD 1 1/2" & 2" WATER SERVICE

GENERAL NOTES:

1. ALL CONSTRUCTION MATERIALS AND WORKMANSHIP SHALL CONFORM TO THE CLARK PUBLIC UTILITIES (CPU) WATER CONSTRUCTION SPECIFICATIONS, STANDARD DETAILS, AND THE 2000 EDITION OF THE "STANDARD SPECIFICATIONS FOR ROAD AND BRIDGE CONSTRUCTION" PUBLISHED BY WASHINGTON STATE DEPARTMENT OF TRANSPORTATION (WSDOT).
2. A WATER UTILITY INSPECTOR SHALL BE AT THE JOB SITE DURING CONSTRUCTION OF ALL WATER FACILITIES. CONTACT 992-8019 TWO WORKING DAYS PRIOR TO COMMENCING WORK. WORK WITHIN COUNTY RIGHT-OF-WAY SHALL CONFORM WITH CLARK COUNTY PUBLIC WORKS UTILITY PERMIT REQUIREMENTS AND DETAILS.
3. WORK WITHIN STATE RIGHT-OF-WAY SHALL CONFORM TO WSDOT UTILITY PERMIT REQUIREMENTS AND DETAILS.
4. WATER MAIN SHALL BE PVC C-900, P.C. 150 OR AS SPECIFIED ON PLANS.
5. INSTALL WATERMAIN WITH 3.0 FEET OF MINIMUM COVER UNLESS OTHERWISE NOTED. DEPTH MAY INCREASE AT UTILITY AND CULVERT CROSSINGS. (REFER TO NOTE 12)
6. THE LOCATION OF THE UTILITIES SHALL BE VERIFIED IN ADVANCE TO ALLOW FOR ALIGNMENT ADJUSTMENTS. CALL UTILITY LOCATES TWO(2) WORKING DAYS PRIOR TO CONSTRUCTION (1-800-553-4344).
7. A TAPPING COMPANY APPROVED BY CLARK PUBLIC UTILITIES SHALL BE USED TO MAKE ALL TAPS.
8. LOCATE WIRE SHALL BE NON-COATED, NO. 14 GA. SOFT DRAWN SOLID COPPER.
9. DRY CALCIUM HYPO CHLORIDE IN TABLET FORM, FAST DISSOLVING, WITH 65% MIN. AVAILABLE CHLORINE SHALL BE USED TO CHLORINATE ALL NEW MAINS. THE NUMBER OF TABLETS TO BE APPLIED PER 20 FOOT LENGTH OF PIPE SHALL BE AS FOLLOWS:

PIPE SIZE	NUMBER OF TABLETS
4"	2
6"	3
8"	4
10"	6
12"	8

10. ACTUAL ROAD ALIGNMENTS MAY VARY FROM RIGHT-OF-WAY INDICATED. THE CONTRACTOR SHALL VERIFY THE PROPOSED PIPE ALIGNMENT AND REPORT DIFFERENCES TO THE INSPECTOR. ALL ALIGNMENT CHANGES MUST BE APPROVED BY THE INSPECTOR PRIOR TO INSTALLATION.
11. DRIVEWAYS DISTURBED BY CONSTRUCTION SHALL BE RESTORED BY THE CONTRACTOR TO "LIKE" OR BETTER CONDITION. REFER TO PLAN FOR APPROXIMATE LOCATIONS AND TYPES.
12. CONTRACTOR SHALL VERIFY EXISTING UTILITY CULVERTS, CONDUITS AND LINE LOCATION PRIOR TO CONSTRUCTION. DUE TO FIELD CONDITIONS, THE CONTRACTOR SHALL FIELD ADJUST THE VERTICAL AND HORIZONTAL ALIGNMENT OF THE WATER MAIN TO CLEAR THE UTILITY IN CONFLICT AND PROVIDE THE MIN. 3.0 FEET OF COVER AS APPROVED BY THE INSPECTOR. ALL CULVERTS WHICH ARE DISTURBED BY CONSTRUCTION SHALL BE RESTORED BY THE CONTRACTOR IN ACCORDANCE WITH THE SPECIFICATIONS.
13. FENCES DISTURBED BY CONSTRUCTION SHALL BE RESTORED BY THE CONTRACTOR TO "LIKE" OR BETTER CONDITION.
14. CONTRACTOR SHALL VERIFY EXISTING SIGN AND MAILBOX LOCATIONS PRIOR TO CONSTRUCTION. SIGNS & MAILBOXES THAT ARE DISTURBED BY CONSTRUCTION SHALL BE RELOCATED BACK FROM EDGE OF PAVEMENT, 1.0 FEET CLEAR OF WATERMAIN. ANY SIGNS OR MAILBOXES DAMAGED SHALL BE REPAIRED OR REPLACED AS PER THE SPECIFICATIONS.
15. ALL WATER SERVICES, BLOW-OFF ASSEMBLIES, AIR RELEASE VALVES, FIRE HYDRANT ASSEMBLIES, VALVE BOXES, AND THRUST BLOCKING SHALL BE INSTALLED AS PER THE STANDARD SPECIFICATIONS AND DETAILS.
16. THE EXACT LOCATION OF ALL POLES HAVE NOT BEEN INDICATED. ONLY THOSE POLES THAT MAY BE IN CONFLICT WITH THE WATERMAIN ALIGNMENT HAVE BEEN INDICATED. SHIFT WATERMAIN TO AVOID CONFLICT WITH POLE.
17. THE LOCATIONS OF ALL EXISTING UTILITIES ARE FOR INFORMATIONAL PURPOSES ONLY. MANY LOCATIONS ARE AS PER SCHEMATIC RECORD DRAWINGS. THE PLANS INDICATE ONLY TELEPHONE AND POWER. UTILITY SERVICE CROSSINGS HAVE NOT BEEN IDENTIFIED. THE CURRENT AND EXACT LOCATIONS OF FACILITIES MUST BE VERIFIED PRIOR TO CONSTRUCTION. THE CONTRACTOR PERFORMING THE WORK SHALL COMPLY WITH THE PROVISIONS OF CHAPTER 19.122 RCW, INCLUDING NOTIFICATION OF ALL OWNERS OF UNDERGROUND FACILITIES AT LEAST 48 BUSINESS DAY HOURS PRIOR TO EXCAVATION. CALL 696-4848 FOR UTILITY LOCATE SERVICE.
18. WATERMAINS BEING INSTALLED NEAR TELEPHONE/CABLE COMMUNICATIONS SHALL HAVE A MINIMUM 12" HORIZONTAL AND 6" VERTICAL CLEARANCE.
19. WATERMAINS BEING INSTALLED NEAR UNDERGROUND POWER LINES SHALL HAVE A MINIMUM 12" HORIZONTAL AND 6" VERTICAL CLEARANCE.
20. REQUIRED SEPARATION BETWEEN WATER LINES AND SANITARY SEWER LINES SHALL BE AS FOLLOWS:

    HORIZONTAL SEPARATION (PARALLEL)
    A MINIMUM HORIZONTAL SEPARATION OF TEN (10) FEET (MEASURED EDGE TO EDGE) BETWEEN SANITARY SEWER LINES AND WATER LINES SHALL BE MAINTAINED WHENEVER POSSIBLE. WHEN CONDITIONS PREVENT THE MINIMUM TEN (10) FOOT HORIZONTAL SEPARATION, THE ENGINEER SHALL BE NOTIFIED.

    VERTICAL SEPARATION (PERPENDICULAR)
    WATER LINES CROSSING SANITARY SEWER LINES SHALL BE LAID ABOVE THE SEWER LINES TO PROVIDE A SEPARATION OF AT LEAST 18 INCHES BETWEEN THE INVERT OF THE WATER PIPE AND THE CROWN OF THE SANITARY SEWER PIPE. A LENGTH OF WATER PIPE SHALL BE CENTERED AT THE POINT OF CROSSING AND SHALL BE THE LONGEST STANDARD LENGTH AVAILABLE FROM THE MANUFACTURER.
21. VALVE SHALL BE 2" SQUARE OPERATING NUT OR AS SPECIFIED ON PLANS.
22. WHENEVER A PIPE IS CUT AND NOT RECONNECTED, THE CUT ENDS SHALL BE CAPPED OR PLUGGED, AS DIRECTED BY THE CPU INSPECTOR.

FIRE HYDRANT NOTES:

1. FIRE HYDRANT INSTALLATIONS SHALL BE INSPECTED PRIOR TO BACKFILLING.
2. WHERE HYDRANTS SET BEHIND SIDEWALK, DISTANCE FROM BACK OF SIDEWALK TO HYDRANT C SHALL BE 18" MIN., 24" MAX.
3. FIRE HYDRANTS SHALL BE SHOP PAINTED PRIOR TO INSTALLATION W/ STANDARD A.W.W.A., GLOSS B, YELLOW

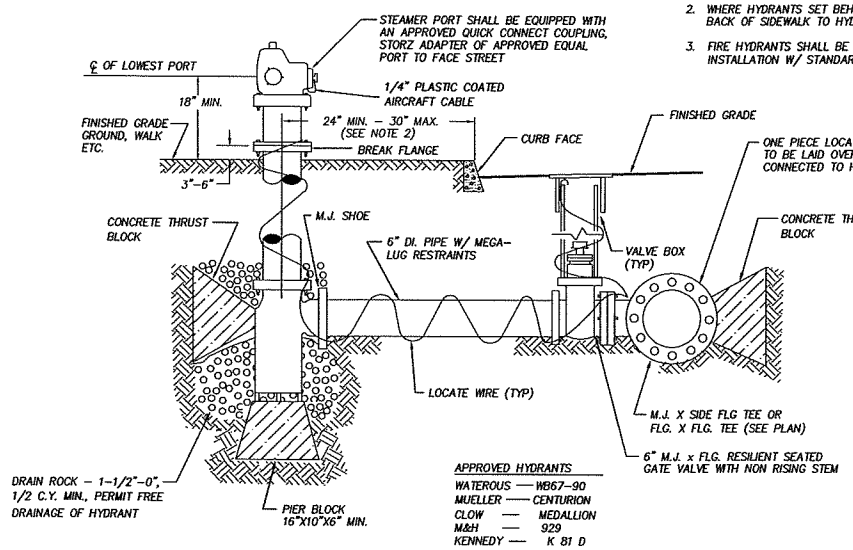

APPROVED HYDRANTS

WATEROUS	WB67-90
MUELLER	CENTURION
CLOW	MEDALLION
M&H	929
KENNEDY	K 81 D

STANDARD FIRE HYDRANT ASSEMBLY

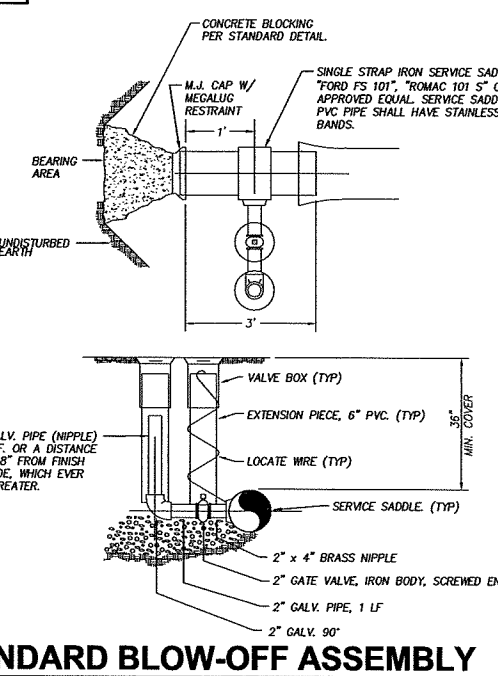

STANDARD BLOW-OFF ASSEMBLY (PERMANENT)

PIPE SIZE	HORIZ. FITTINGS (BENDS)	BEARING AREA (SF)	MINIMUM BLOCK SIZE (FT.)	VOL. OF BLOCKING (CF)	MINIMUM LENGTH OF BLOCKING (FT.-IN.)
4"	TEE	1.2	1.0' x 1.0'	0.3	0'-6"
	90°	1.7	1.5' x 1.5'	0.6	0'-6"
	45°	0.9	1.0' x 1.0'	0.3	0'-6"
	22-1/2°	0.5	1.0' x 1.0'	0.3	0'-6"
6"	TEE	2.4	1.5' x 1.5'	0.6	0'-6"
	90°	3.4	2.0' x 2.0'	1.4	0'-8"
	45°	1.9	1.5' x 1.5'	0.6	0'-6"
	22-1/2°	1.0	1.0' x 1.0'	0.3	0'-6"
	11-1/4°	0.5	1.0' x 1.0'	0.3	0'-6"
8"	TEE	4.0	2.0' x 2.0'	1.5	0'-8"
	90°	5.6	2.5' x 2.5'	2.8	0'-10"
	45°	3.1	2.0' x 2.0'	1.5	0'-8"
	22-1/2°	1.6	1.5' x 1.5'	0.7	0'-6"
	11-1/4°	0.8	1.0' x 1.0'	0.3	0'-6"
10"	TEE	6.2	2.5' x 2.5'	3.0	0'-10"
	90°	8.7	3.0' x 3.0'	4.5	1'-0"
	45°	4.8	2.5' x 2.5'	2.5	0'-8"
	22-1/2°	2.5	2.0' x 2.0'	1.4	0'-6"
	11-1/4°	1.3	1.5' x 1.5'	0.8	0'-6"
12"	TEE	8.6	3.0' x 3.0'	5.0	1'-0"
	90°	12.2	3.5' x 3.5'	7.8	1'-3"
	45°	6.6	2.5' x 2.5'	3.0	0'-9"
	22-1/2°	3.4	2.0' x 2.0'	1.5	0'-6"
	11-1/4°	1.7	1.5' x 1.5'	0.8	0'-6"
16"	TEE	15.2	4.0' x 4.0'	12	1'-3"
	90°	21.4	4.5' x 4.5'	17	1'-6"
	45°	11.6	3.5' x 3.5'	7.5	1'-0"
	22-1/2°	5.9	2.5' x 2.5'	2.7	0'-6"
	11-1/4°	3.0	2.0' x 2.0'	1.7	0'-6"
18"	TEE	19.1	4.0' x 4.0'	12	1'-3"
	90°	27.1	5.0' x 5.0'	23	1'-9"
	45°	14.7	4.0' x 4.0'	12	1'-2"
	22-1/2°	7.5	3.0' x 3.0'	4.7	0'-8"
	11-1/4°	3.8	2.0' x 2.0'	1.9	0'-6"

SOIL BEARING = 2000 LB/FT 11/98

STANDARD THRUST BLOCK

THRUST BLOCK NOTES:

1. POURED BLOCKING SHALL BE POURED IN PLACE WITHOUT DIRECT CONTACT TO THE PIPE OR FITTINGS SOME PROTECTIVE MATERIAL SUCH AS PLASTIC SHALL BE PLACED BETWEEN THE CONCRETE AND PIPE OR FITTING.
2. POURED BLOCKING SHALL BE POURED AGAINST FIRM UNDISTURBED SOIL.
3. CONCRETE FOR ALL BLOCKING SHALL HAVE A 28-DAY MINIMUM COMPRESSIVE STRENGTH OF 2,500 P.S.I.
4. CONCRETE BLOCKING FOR VERTICAL BENDS SHALL BE PER APWA STD. PLAN NO. B-22.
5. LAYOUT TO BE APPROVED BY THE INSPECTOR PRIOR TO AND AFTER CONCRETE POUR.

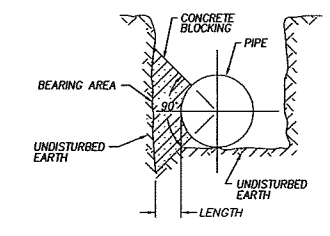

FOR INFORMATIONAL PURPOSES ONLY

ALL PLAN DETAIL AND INFORMATION IS NOT SHOWN ON THIS 90% COMPLETED SET OF PLANS.

90% SUBMITTAL - JULY 2004

DESIGNED:	TSH
DRAWN:	ARU
CRP:	330222
HOR.	N/A
VERT.	N/A
DATE:	7/2004
DWG:	
SHEET 16 OF 99	

CALL 48 HOURS BEFORE YOU DIG 1-800-553-4344 "It's the Law" NORTHWEST UTILITIES NOTIFICATION CENTER

Harper Houf Peterson Righellis Inc.
ENGINEERS PLANNERS SURVEYORS
1104 MAIN STREET, SUITE 100, VANCOUVER, WA 98660
TEL 360.750.1131 www.hhpr.com FAX 360.750.1141

DESIGN & ENGINEERING DIVISION

NE 88TH STREET WATER DETAILS

proud past, promising future

CLARK COUNTY WASHINGTON

P:\Clk-12 (NE 88th)\CRK12-DWGS\ Crk12-DT06.DWG

P:\Crk-12 (NE 88th)\CRK12-DWGS\ Crk12-DT02.DWG

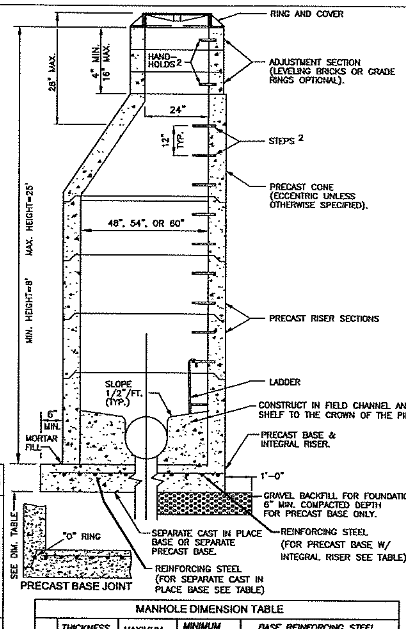

MANHOLE DIMENSION TABLE

DIA.	THICKNESS WALL	THICKNESS BASE	MAXIMUM KNOCKOUT SIZE	MINIMUM DISTANCE BETWEEN KNOCKOUTS	BASE REINFORCING STEEL SQ IN/FT EACH DIRECTION INTEGRAL BASE	SEPARATE BASE
48"	4"	6"	36"	8"	0.15	0.23
54"	4.5"	8"	42"	8"	0.19	0.19
60"	5"	8"	48"	8"	0.25	0.25

NOTES:

1. MANHOLES SHALL BE CONSTRUCTED IN ACCORDANCE WITH AASHTO M199 UNLESS OTHERWISE SHOWN ON PLANS OR NOTED IN THE WSDOT/APWA STANDARD SPECIFICATIONS.
2. HANDHOLDS IN ADJUSTMENT SECTION SHALL HAVE 3" MIN. CLEARANCE. STEPS IN MANHOLE SHALL HAVE 6" MIN. CLEARANCE. SEE PLAN NO. D1.5, "MANHOLE DETAILS." HANDHOLDS SHALL BE PLACED IN ALTERNATING GRADE RINGS OR LEVELING BRICK COURSE WITH A MIN. OF ONE HAND HOLD BETWEEN THE LAST STEP AND THE TOP OF THE MANHOLE.
3. ALL REINFORCED CAST-IN-PLACE CONCRETE SHALL BE CLASS 4000. ALL PRECAST CONCRETE SHALL BE CLASS 4000. NON-REINFORCED CONCRETE IN CHANNEL AND SHELF SHALL BE CLASS 3000.
4. PRECAST BASES SHALL BE FURNISHED WITH CUTOUTS OR KNOCKOUTS. KNOCKOUTS SHALL HAVE WALL THICKNESS OF 2" MIN. UNUSED KNOCKOUTS NEED NOT BE GROUTED IF WALL IS LEFT INTACT. PIPES SHALL BE INSTALLED ONLY IN FACTORY KNOCKOUTS UNLESS OTHERWISE APPROVED BY THE ENGINEER.
5. KNOCKOUT OR CUTOUT HOLE SIZE SHALL EQUAL PIPE OUTER DIAM. PLUS MANHOLE WALL THICKNESS. SEE MANHOLE DIMENSION TABLE BELOW.
6. MANHOLE RINGS AND COVERS SHALL BE IN ACCORDANCE WITH SEC. 7.05 AND MEET THE STRENGTH REQUIREMENTS OF FEDERAL SPECIFICATION RR-F-621D. MATING SURFACES SHALL BE FINISHED TO ASSURE NON-ROCKING FIT WITH ANY COVER POSITION.
7. ALL BASE REINFORCING STEEL SHALL HAVE A MIN. YIELD STRENGTH OF 60,000 PSI AND BE PLACED IN THE UPPER HALF OF THE BASE WITH 1" MIN. CLEARANCE.
8. FOR HEIGHTS OF 12' OR LESS, MIN. SOIL BEARING VALUE SHALL EQUAL 3,300 POUNDS PER SQUARE FOOT. FOR HEIGHTS OVER 12', MIN. SOIL BEARING VALUE SHALL EQUAL 3,800 POUNDS PER SQUARE FOOT.
9. FOR DETAILS SHOWING GRADE RING, LADDER, STEPS, HANDHOLDS, AND TOP SLABS, SEE PLAN NO. D1.5, "MANHOLE DETAILS."
10. INSIDE DROP MAXIMUM TO BE 4' VERTICAL DISTANCE I.E. TO I.E.
11. KNOCKOUTS TO BE USED WHEN STUB OUT PIPE IS 3' OR LESS.
12. MINIMUM 0.20' FALL BETWEEN INLET AND OUTLET, ANY REDUCTION IN THIS DESIGN REQUIREMENT MUST BE APPROVED BY REVIEWING AUTHORITY.
13. SEE THE WSDOT/APWA STANDARD SPECIFICATIONS SEC. 7-05.3 FOR JOINT REQUIREMENTS.

DWG: D1-1.DWG
Department of Public Works
CLARK COUNTY WASHINGTON
proud past, promising future

NO.	REVISIONS	DATE	BY

STANDARD MANHOLE TYPE 1
48", 54", & 60"
APPROVED
COUNTY ENGINEER — DATE 01/01/04
STANDARD PLAN No. D1.1
DESIGNED SCH DRAWN SCH DATE 07/07/03

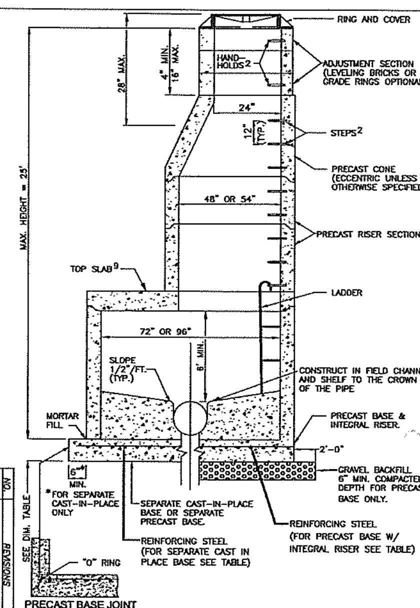

MANHOLE DIMENSION TABLE

DIA.	THICKNESS WALL	THICKNESS BASE	MAXIMUM KNOCKOUT SIZE	MINIMUM DISTANCE BETWEEN KNOCKOUTS	BASE REINFORCING STEEL SQ IN/FT EACH DIRECTION INTEGRAL BASE	SEPARATE BASE
72"	6"	8"	60"	12"	0.24	0.35
96"	8"	12"	84"	12"	0.29	0.39

NOTES:

1. MANHOLES SHALL BE CONSTRUCTED IN ACCORDANCE WITH AASHTO M199 UNLESS OTHERWISE SHOWN ON PLANS OR NOTED IN THE WSDOT/APWA STANDARD SPECIFICATIONS.
2. HANDHOLDS IN ADJUSTMENT SECTION SHALL HAVE 3" MIN. CLEARANCE. STEPS IN MANHOLE SHALL HAVE 6" MIN. CLEARANCE. SEE PLAN NO. D1.5, "MANHOLE DETAILS." HANDHOLDS SHALL BE PLACED IN ALTERNATING GRADE RINGS OR LEVELING BRICK COURSE WITH A MIN. OF ONE HAND HOLD BETWEEN THE LAST STEP AND THE TOP OF THE MANHOLE.
3. ALL REINFORCED CAST-IN-PLACE CONCRETE SHALL BE CLASS 4000. ALL PRECAST CONCRETE SHALL BE CLASS 4000. NON-REINFORCED CONCRETE IN CHANNEL AND SHELF SHALL BE CLASS 3000.
4. PRECAST BASES SHALL BE FURNISHED WITH CUTOUTS OR KNOCKOUTS. KNOCKOUTS SHALL HAVE WALL THICKNESS OF 2" MIN. UNUSED KNOCKOUTS NEED NOT BE GROUTED IF WALL IS LEFT INTACT. PIPES SHALL BE INSTALLED ONLY IN FACTORY KNOCKOUTS UNLESS OTHERWISE APPROVED BY THE ENGINEER.
5. KNOCKOUT OR CUTOUT HOLE SIZE SHALL EQUAL PIPE OUTER DIAM. PLUS MANHOLE WALL THICKNESS. SEE MANHOLE DIMENSION TABLE BELOW.
6. MANHOLE RINGS AND COVERS SHALL BE IN ACCORDANCE WITH SEC. 7.05 AND MEET THE STRENGTH REQUIREMENTS OF FEDERAL SPECIFICATION RR-F-621D. MATING SURFACES SHALL BE FINISHED TO ASSURE NON-ROCKING FIT WITH ANY COVER POSITION.
7. ALL BASE REINFORCING STEEL SHALL HAVE A MIN. YIELD STRENGTH OF 60,000 PSI AND BE PLACED IN THE UPPER HALF OF THE BASE WITH 1" MIN. CLEARANCE.
8. FOR HEIGHTS OF 12' OR LESS, MIN. SOIL BEARING VALUE SHALL EQUAL 3,300 POUNDS PER SQUARE FOOT. FOR HEIGHTS OVER 12', MIN. SOIL BEARING VALUE SHALL EQUAL 3,800 POUNDS PER SQUARE FOOT.
9. FOR DETAILS SHOWING GRADE RING, LADDER, STEPS, HANDHOLDS, AND TOP SLABS, SEE PLAN NO. D1.5, "MANHOLE DETAILS."
10. INSIDE DROP MAXIMUM TO BE 4' VERTICAL DISTANCE I.E. TO I.E.
11. KNOCKOUTS TO BE USED WHEN STUB OUT PIPE IS 3' OR LESS.
12. MINIMUM 0.20' FALL BETWEEN INLET AND OUTLET, ANY REDUCTION IN THIS DESIGN REQUIREMENT MUST BE APPROVED BY REVIEWING AUTHORITY.
13. SEE THE WSDOT/APWA STANDARD SPECIFICATIONS SEC. 7-05.3 FOR JOINT REQUIREMENTS.

DWG: D1-2.DWG
Department of Public Works
CLARK COUNTY WASHINGTON
proud past, promising future

NO.	REVISIONS	DATE	BY

MANHOLE TYPE 2
72" & 96"
APPROVED
COUNTY ENGINEER — DATE 01/01/04
STANDARD PLAN No. D1.2
DESIGNED SCH DRAWN SCH DATE 07/07/02

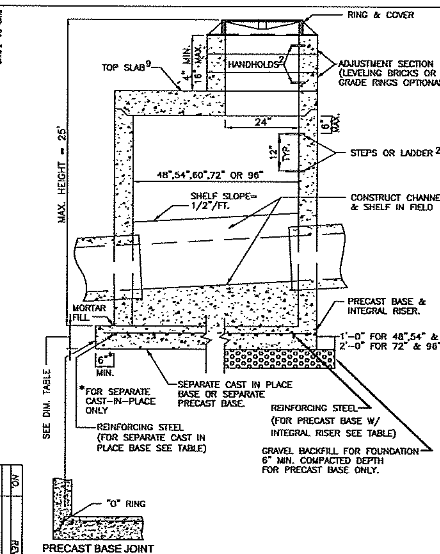

MANHOLE DIMENSION TABLE

DIA.	THICKNESS WALL	THICKNESS BASE	MAXIMUM KNOCKOUT SIZE	MINIMUM DISTANCE BETWEEN KNOCKOUTS	BASE REINFORCING STEEL SQ IN/FT EACH DIRECTION INTEGRAL BASE	SEPARATE BASE
48"	4"	6"	36"	8"	0.15	0.23
54"	4.5"	8"	42"	8"	0.19	0.19
60"	5"	8"	48"	8"	0.25	0.25
72"	6"	8"	60"	12"	0.24	0.35
96"	8"	12"	84"	12"	0.29	0.39

NOTES:

1. MANHOLES SHALL BE CONSTRUCTED IN ACCORDANCE WITH AASHTO M199 UNLESS OTHERWISE SHOWN ON PLANS OR NOTED IN THE WSDOT/APWA STANDARD SPECIFICATIONS.
2. HANDHOLDS IN ADJUSTMENT SECTION SHALL HAVE 3" MIN. CLEARANCE. STEPS IN MANHOLE SHALL HAVE 6" MIN. CLEARANCE. SEE PLAN D1.5, "MANHOLE DETAILS." HANDHOLDS SHALL BE PLACED IN ALTERNATING GRADE RINGS OR LEVELING BRICK COURSE WITH A MIN. OF ONE HANDHOLD BETWEEN THE LAST STEP AND THE TOP OF THE MANHOLE.
3. ALL REINFORCED CAST-IN-PLACE CONCRETE SHALL BE CLASS4000. NON-REINFORCED CONCRETE IN CHANNEL AND SHELF SHALL BE CLASS 3000. ALL PRECAST CONCRETE SHALL BE CLASS 4000.
4. PRECAST BASES SHALL BE FURNISHED WITH CUTOUTS OR KNOCKOUTS. KNOCKOUTS SHALL HAVE WALL THICKNESS OF 2" MIN. UNUSED KNOCKOUTS NEED NOT BE GROUTED IF WALL IS LEFT INTACT. PIPES SHALL BE INSTALLED ONLY IN FACTORY KNOCKOUTS UNLESS OTHERWISE APPROVED BY THE ENGINEER.
5. KNOCKOUT OR CUTOUT HOLE SIZE SHALL EQUAL PIPE OUTER DIAM. PLUS MANHOLE WALL THICKNESS. SEE MANHOLE DIMENSION TABLE BELOW.
6. MANHOLE RINGS AND COVERS SHALL BE IN ACCORDANCE WITH SEC. 7.05 AND MEET THE STRENGTH REQUIREMENTS OF FEDERAL SPECIFICATION RR-F-621D. MATING SURFACES SHALL BE FINISHED TO ASSURE NON-ROCKING FIT WITH ANY COVER POSITION.
7. ALL BASE REINFORCING STEEL SHALL HAVE A MIN. YIELD STRENGTH OF 60,000 PSI AND BE PLACED IN THE UPPER HALF OF THE BASE WITH 1" MIN. CLEARANCE.
8. FOR HEIGHTS OF 12' OR LESS, MIN. SOIL BEARING VALUE SHALL EQUAL 3,300 POUNDS PER SQUARE FOOT. FOR HEIGHTS OVER 12', MIN. SOIL BEARING VALUE SHALL EQUAL 3,800 POUNDS PER SQUARE FOOT.
9. FOR DETAILS SHOWING GRADE RING, LADDER, STEPS, HANDHOLDS, AND TOP SLABS, SEE PLAN D1.5, "MANHOLE DETAILS."
10. INSIDE DROP MAXIMUM TO BE 4' VERTICAL DISTANCE I.E. TO I.E.
11. KNOCKOUTS TO BE USED WHEN STUB OUT PIPE IS 3' OR LESS.
12. MINIMUM 0.20' FALL BETWEEN INLET AND OUTLET, ANY REDUCTION IN THIS DESIGN REQUIREMENT MUST BE APPROVED BY REVIEWING AUTHORITY.
13. SEE THE WSDOT/APWA STANDARD SPECIFICATIONS SEC. 7-05.3 FOR JOINT REQUIREMENTS.

DWG: D1-3.DWG
Department of Public Works
CLARK COUNTY WASHINGTON
proud past, promising future

NO.	REVISIONS	DATE	BY

MANHOLE TYPE 3
48", 54", 60", 72", & 96"
APPROVED
COUNTY ENGINEER — DATE 01/01/04
STANDARD PLAN No. D1.3
DESIGNED SCH DRAWN SCH DATE 07/07/03

STORM DRAIN GENERAL NOTES:

1. MATERIALS AND WORKMANSHIP FOR STREET AND DRAINAGE WORK SHALL CONFORM TO THE LATEST EDITION OF THE WSDOT/APWA "STANDARD SPECIFICATIONS FOR ROAD, BRIDGE AND MUNICIPAL CONSTRUCTION" (CCC 40.380.040(A), AND STANDARD DETAIL SHEETS ATTACHED HEREWITH.

2. PROOF OF LIABILITY INSURANCE IN THE AMOUNT OF FIVE HUNDRED THOUSAND DOLLARS ($500,000) SHALL BE SUBMITTED TO CLARK COUNTY DEPARTMENT OF COMMUNITY DEVELOPMENT, DIVISION OF ENGINEERING SERVICES PRIOR TO THE PRE-CONSTRUCTION MEETING (CCC40.380.050(E)).

3. PRECAST DRAINAGE STRUCTURES PREVIOUSLY APPROVED BY WASHINGTON DEPARTMENT OF TRANSPORTATION AND THE CLARK COUNTY PUBLIC WORKS DEPARTMENT MAY BE SUBSTITUTED FOR ANY NEW STANDARD CAST-IN-PLACE UNIT. HOWEVER, IT IS THE CONTRACTOR'S RESPONSIBILITY TO ASSURE THAT THE PRECAST DRAINAGE STRUCTURES COMPLY WITH THE DESIGN INVERTS AND RIM ELEVATIONS.

4. THE CONTRACTOR IS TO VERIFY ALL INVERT AND TOP ELEVATIONS OF EXISTING STORM DRAINS, AND REPORT ANY DISCREPANCIES IMMEDIATELY TO THE ENGINEER.

5. CONTRACTOR TO VERIFY CENTERLINE AND TOP OF THE CURB ELEVATIONS PRIOR TO CONSTRUCTION TO ENSURE COMPLIANCE WITH THE CONSTRUCTION DRAWINGS AND REPORT ANY DISCREPANCIES IMMEDIATELY TO THE ENGINEER.

6. THE CONTRACTOR SHALL BE RESPONSIBLE FOR DETERMINING THE LOCATION OF ALL UNDERGROUND UTILITIES PRIOR TO THE START OF CONSTRUCTION AND TO NOTIFY THE ENGINEER OF ANY POTENTIAL CONFLICTS. THE CONTRACTOR SHALL DIG TEST HOLES OVER ALL EXISTING UTILITIES PRIOR TO CONSTRUCTION TO DETERMINE THEIR EXACT LOCATION. CALL (360) 696-4848 FOR UTILITIES LOCATE, A MINIMUM OF 48 HOURS PRIOR TO START OF CONSTRUCTION.

7. IT SHALL BE THE RESPONSIBILITY OF THE DEVELOPER AND/OR CONTRACTOR TO PROCURE ALL APPLICABLE PERMITS, LICENSES AND CERTIFICATES RELATIVE TO THE TRADES TO COMPLETE THE PROJECT AND FOR THE USE OF SUCH WORK WHEN COMPLETED. COMPLIANCE SHALL BE AT ALL LEVELS: FEDERAL, STATE AND COUNTY RELATING TO THE PERFORMANCE OF THIS WORK.

8. ALL EROSION CONTROL DEVICES SHALL BE CONSTRUCTED IN ACCORDANCE WITH THE EROSION CONTROL PLAN AND EROSION CONTROL DETAILS, PRIOR TO START OF CONSTRUCTION (CCC 40.380.060(E)).

9. THE CONTRACTOR SHALL SUBMIT A TRAFFIC CONTROL PLAN. THIS PLAN SHALL BE APPROVED BY PUBLIC WORKS-TRANSPORTATION SYSTEMS DIVISION (397-2375 X4523). APPROVAL SHALL BE OBTAINED PRIOR TO THE PRE-CONSTRUCTION MEETING AND START OF CONSTRUCTION.

10. THE DEVELOPER SHALL OBTAIN ALL OFFSITE CONSTRUCTION EASEMENTS PRIOR TO THE START OF CONSTRUCTION. THE APPLICANT SHALL VERIFY THAT ALL OFFSITE UTILITES EASEMENTS HAVE BEEN OBTAINED BY THE OWNER PRIOR TO PLAN APPROVAL FOR OFFSITE CONSTRUCTION.

11. ALL CATCH BASINS AND MANHOLES CAPABLE OF ACCEPTING STORMWATER SHALL BE STENCILED AS FOLLOW PER CCC 40.380.040(B)(10)(a & b).

INFILTRATION SYSTEMS - "PLEASE PROTECT - DRAINS TO DRINKING WATER"
ALL OTHER SYSTEMS - "PLEASE PROTECT - DRAINS TO STREAM"

12. PER CCC 40.380.040(B)(10)(c & d) SIGNS SHALL BE INSTALLED AS FOLLOWS:

STENCILING COLORS SHALL BE BLUE BACKGROUND W/ WHITE LETTERING
CONTACT COUNTY INSPECTION AT 397-2375 EXT. 4995 FOR STENCILING STANDARDS

ALONG WATER QUALITY BIOFILTRATION SYSTEMS TO READ "WATER QUALITY FILTER - PLEASE LEAVE VEGETATED"

FENCED RETENTION AND RETENTION BASINS TO READ "[PUBLIC/PRIVATE] STORMWATER CONTROL FACILITY"

PRIVATE SYSTEMS NOT MAINTAINED BY CLARK COUNTY SHALL INCLUDE ADDRESS AND CONTACT INFORMATION OF RESPONSIBLE PARTY.

13. VEGETATION IN BIOFILTRATION SYSTEMS SHALL BECOME FULLY ESTABLISHED PRIOR TO COMMENCING WITH INSTALLATION OF A.C. PAVEMENT FOR ALL AREAS DRAINING INTO THE WATER QUALITY SYSTEM. WATER QUALITY SWALES SHOULD BE GENERALLY VEGETATED WITH RECOMMENDED GRASSES IN THE SWALE BOTTOM; GRASSES, GROUND COVER, AND SHRUBS ON THE SIDE SLOPES; AND GROUND COVERS, SHRUBS, AND TREES ON THE ADJACENT DRY AREAS. PLANTING PLANS MUST BE INDIVIDUALLY TAILORED TO UNIQUE CONDITIONS AT EACH SITE.

SHEET 1 OF 2

NO.	REVISIONS	DATE	BY

DWG: D1-0.DWG
Department of Public Works
CLARK COUNTY WASHINGTON
proud past, promising future
STORM DRAIN GENERAL NOTES
APPROVED
COUNTY ENGINEER — DATE 01/01/04
STANDARD PLAN No. D1.0
DESIGNED SCH DRAWN SCH DATE 07/10/03

STORM DRAIN GENERAL NOTES -CONTINUED-:

14. PER CCC 40.380.040(C)(1)(b) & 14.04.252, ALL LOTS WITHIN THE URBAN GROWTH AREA MUST BE DESIGNED TO PROVIDE POSITIVE DRAINAGE FROM BOTTOM OF FOOTINGS TO AN APPROVED STORMWATER SYSTEM. POSITIVE DRAINAGE MAY BE ACCOMPLISHED BY THE USE OF SWALES, DRYWELLS, FRENCH DRAINS, LATERAL TO THE STREET, LATERALS BEHIND THE CURB OR WITHIN A PUBLIC UTILITY EASEMENT, AN APPROVED BACKYARD OR SIDE YARD SYSTEM, OR SOME OTHER METHOD ACCEPTABLE TO THE BUILDING OFFICIAL AND/OR DIRECTOR. STUB-OUTS (LATERALS) SHALL CONFORM TO THE FOLLOWING:

a) EACH OUTLET SHALL BE SUITABLY LOCATED AT THE LOWEST ELEVATION ON THE LOT, SO AS TO SERVICE ALL FUTURE ROOF DOWN SPOUTS AND FOOTING DRAINS, DRIVEWAYS, YARD DRAINS, AND ANY OTHER SUBSURFACE DRAINS NECESSARY TO RENDER THE LOTS SUITABLE FOR THEIR INTENDED USE. EACH OUTLET SHALL HAVE FREE-FLOWING, POSITIVE DRAINAGE TO AN APPROVED STORMWATER CONVEYANCE SYSTEM OR TO AN APPROVED OUTFALL LOCATION.
b) THE STUB-OUT I.E. ON EACH LOT SHALL BE LOCATED WITH A FIVE-FOOT-HIGH, 2"x 4" STAKE MARKED "DRAIN", WITH PIPE AND STAKE ADEQUATELY WRAPPED WITH COPPER LOCATOR WIRE.
c) STUB-OUT TO BE 6" MINIMUM DIAMETER, CORRUGATED POLYETHYLENE STORM SEWER PIPE (N-12), AT 2% MINIMUM SLOPE. PIPE SHALL CONTAIN WIRE OR OTHER ACCEPTABLE DETECTION.
d) DRAINAGE EASEMENTS ARE REQUIRED FOR DRAINAGE SYSTEMS DESIGNED TO CONVEY FLOWS THROUGH INDIVIDUAL LOTS.
e) THE APPLICANT/CONTRACTOR IS RESPONSIBLE FOR COORDINATING THE PROPER LOCATION OF ALL STUB-OUT CONVEYANCE LINES WITH RESPECT TO UTILITIES (e.g., power, gas, telephone, television, etc.), AND FOR AS BUILT PLANS.
f) ALL INDIVIDUAL STUB-OUTS SHALL BE PRIVATELY OWNED AND MAINTAINED BY THE LOT OWNER, TO IT'S CONNECTION WITH THE MAIN.

16. PRIVATE SYSTEMS MUST MEET PLUMBING CODE, HAVE AN OPERATIONS AND MAINTENANCE MANUAL, MAINTENANCE COVENANT OVER THE REQUIRED EASEMENT, AND COVENANT TO CLARK COUNTY FOR INSPECTION AND REVIEW.

SHEET 2 OF 2

NO.	REVISIONS	DATE	BY

DWG: D1-0.DWG
Department of Public Works
CLARK COUNTY WASHINGTON
proud past, promising future
STORM DRAIN GENERAL NOTES -CONTINUED-
APPROVED
COUNTY ENGINEER — DATE 01/01/04
STANDARD PLAN No. D1.0
DESIGNED SCH DRAWN SCH DATE 07/07/03

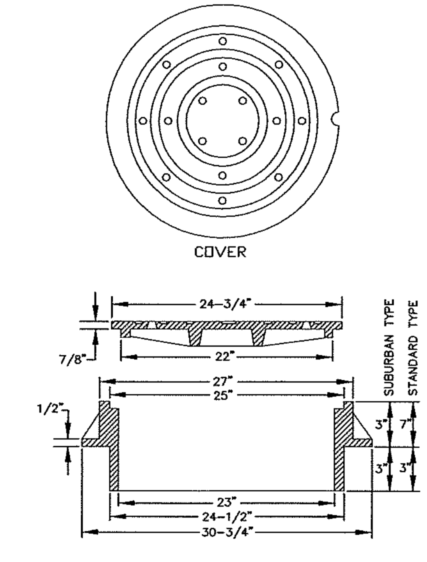

NOTES:

1. USE SUBURBAN TYPE ONLY IN NON-TRAFFIC AREAS, AND ONLY WITH APPROVAL BY COUNTY.
2. COVER MATERIAL TO BE DUCTILE IRON ASTM A536 GRADE 80-55-06
3. FRAME MATERIAL TO BE GRAY CAST IRON ASTM A-48 CLASS 30.
4. SEE WSDOT STANDARD SPECIFICATIONS SEC. 7.05
5. COVER AND FRAME TO BE MACHINED TO A TRUE BEARING ALL AROUND.
6. NOTCH LID FOR LIFTING HOOK.

NO.	REVISIONS	DATE	BY

DWG: D1-6.DWG
Department of Public Works
CLARK COUNTY WASHINGTON
proud past, promising future
STANDARD MANHOLE FRAME AND COVER
APPROVED
COUNTY ENGINEER — DATE 01/01/04
STANDARD PLAN No. D1.6
DESIGNED SCH DRAWN SCH DATE 09/04/02

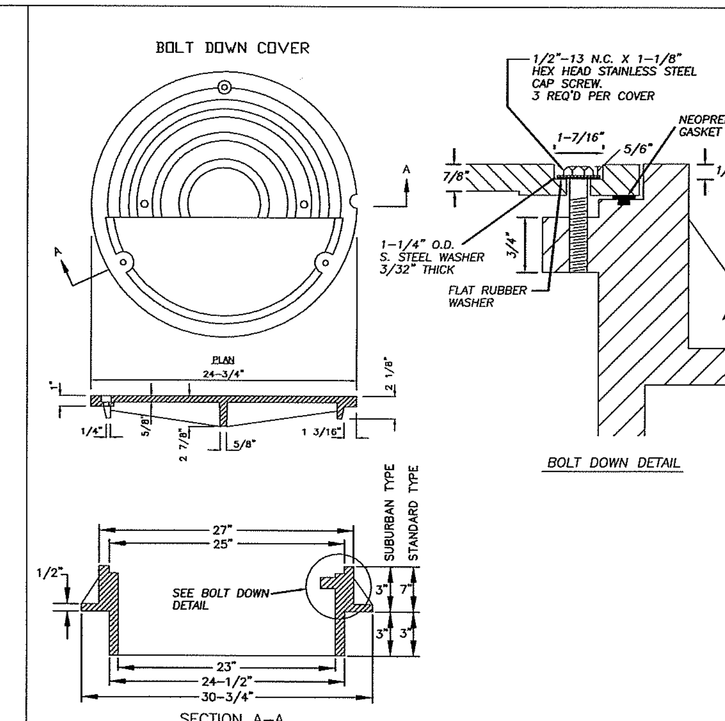

NOTES:

1. USE SUBURBAN TYPE ONLY IN NON-TRAFFIC AREAS, AND ONLY WITH APPROVAL BY COUNTY.
2. COVER MATERIAL TO BE DUCTILE IRON ASTM A536 GRADE 80-55-06
3. FRAME MATERIAL TO BE GRAY CAST IRON ASTM A-48 CLASS 30.
4. SEE WSDOT STANDARD SPECIFICATIONS SEC. 7.05
5. COVER AND FRAME TO BE MACHINED TO A TRUE BEARING ALL AROUND.
6. NOTCH LID FOR LIFTING HOOK.
7. FOR TAMPER PROOF COVER REMOVE GASKET.

NO.	REVISIONS	DATE	BY

DWG: D1-7.DWG
Department of Public Works
CLARK COUNTY WASHINGTON
proud past, promising future
STANDARD MANHOLE BOLT DOWN COVER AND FRAME
APPROVED
COUNTY ENGINEER — DATE 01/01/04
STANDARD PLAN No. D1.7
DESIGNED SCH DRAWN SCH DATE 09/04/02

FOR INFORMATIONAL PURPOSES ONLY
ALL PLAN DETAIL AND INFORMATION IS NOT SHOWN ON THIS 90% COMPLETED SET OF PLANS.
90% SUBMITTAL - JULY 2004

CLARK COUNTY WASHINGTON
proud past, promising future

DESIGN & ENGINEERING DIVISION

NE 88TH STREET
STORM DETAILS AND NOTES

Harper Houf Peterson Righellis Inc.
ENGINEERS • PLANNERS • SURVEYORS
1104 MAIN STREET, SUITE 100, VANCOUVER, WA 98660
TEL 360.750.1131 www.hhpr.com FAX 360.750.1141

CALL 48 HOURS BEFORE YOU DIG
1-800-553-4344
"It's the Law"
NORTHWEST UTILITIES NOTIFICATION CENTER

DESIGNED:	TSH
DRAWN:	NPR
CRP:	330222
HOR.	1" = 60'
VERT.	N/A
DATE:	7/2004
DWG:	
SHEET	17 OF 99

SEDIMENTATION MANHOLE (STANDARD PLAN D7)

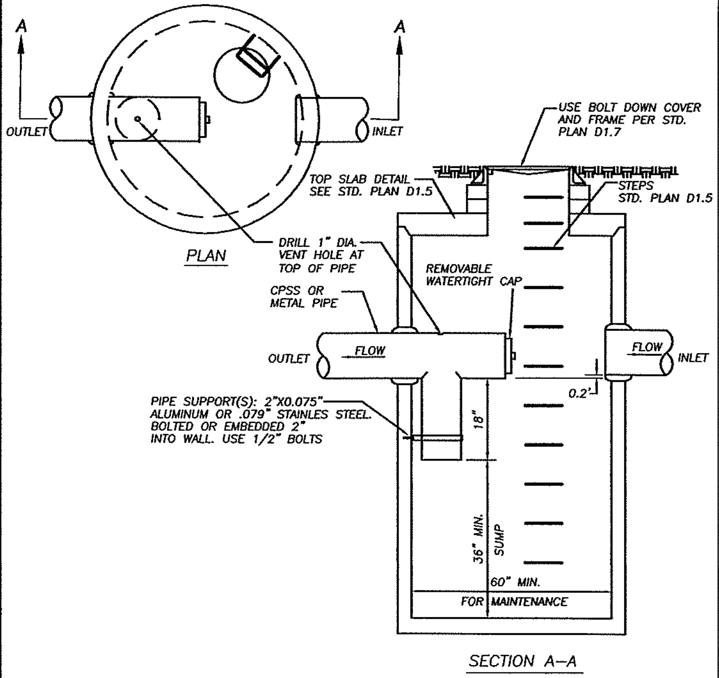

NOTES:

1. EXCEPT AS SHOWN OR NOTED, UNITS SHALL BE CONSTRUCTED IN ACCORDANCE WITH THE REQUIREMENTS FOR WSDOT CATCH BASIN TYPE 2, 60" MINIMUM DIAMETER. SEE WSDOT STANDARD PLAN B-1e
2. FOR DETAILS SHOWING GRADE RING, LADDER, STEPS, HANDHOLDS, AND TOP SLABS, SEE STD. PLAN D1.5

NO.	REVISIONS	DATE	BY

DWG: D7-DWG

Department of Public Works — CLARK COUNTY WASHINGTON — proud past, promising future

SEDIMENTATION MANHOLE — APPROVED — COUNTY ENGINEER — 01/01/04 DATE — STANDARD PLAN No. D7 — DESIGNED SCH DRAWN SCH DATE 07/07/03

STANDARD TYPE 1 CURB INLET (STANDARD PLAN D2.0)

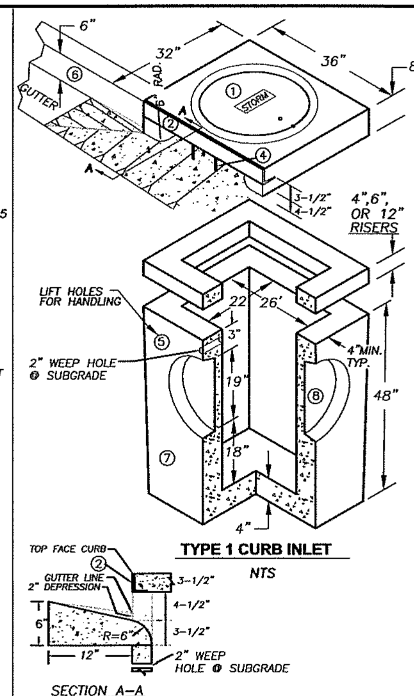

1. 24" CAST IRON LOCKING FRAME & COVER
2. 2 1/2"x3 1/2"x1/4"x 35 7/8" GALVANIZED ANGLE IRON
3. 2"x2 1/2"x1/4"x33" GALVANIZED ANGLE IRON
4. 2 EA. #4 TRASH BARS @ 9" O.C.
5. 2 EA. BASE UNIT LIFT HOLES
6. 6" CURB AND 12" GUTTERS
7. STANDARD TYPE 1 BASE UNIT
8. PIPE KNOCKOUTS ALL FOUR SIDES.

NOTES:

1. CURB INLET TO BE CONSTRUCTED IN ACCORDANCE WITH ASTM C478 & C890 UNLESS SHOWN ON PLANS OR NOTED IN STANDARD SPECIFICATIONS.
2. REINFORCING FOR INLET UNIT, 3 EA. #4 HORZONTAL BARS.
3. REINFORCING FOR TOP UNIT, 2 EA. #3 HORZONTAL BARS.
4. ALL REBAR TO MEET ASTM A615 GRADE 60.
5. AS AN ACCEPTABLE ALTERNATIVE TO REBAR, WELDED WIRE FABRIC HAVING A MIN. AREA OF 0.12 SQAURE INCHES PER FOOT MAY BE USED. WELDED WIRE FABRIC SHALL COMPLY TO ASTM A497. WIRE FABRIC SHALL NOT BE PLACED IN KNOCKOUTS.
6. ALL REINFORCED CAST-IN-PLACE CONCRETE SHALL BE CLASS 4,000.
7. PRECAST BASES SHALL BE FURNISHED WITH CUTOUTS OR KNOCKOUTS. KNOCKOUTS SHALL HAVE A WALL THICKNESS OF 2" MIN. ALL PIPE SHALL BE INSTALLED IN FACTORY PROVIDED KNOCKOUTS. UNUSED KNOCKOUTS NEED NOT BE GROUTED IF WALL IS LEFT INTACT.
8. KNOCKOUTS OR CUTOUT HOLE SIZE IS EQUAL TO PIPE OUTER DIAM. PLUS INLET WALL THICKNESS.
9. ROUND KNOCKOUTS MAY BE ON ALL 4 SIDES WITH MAX. DIAM. OF 17".
10. THE MAX. DEPTH FROM THE FINISHED GRADE TO THE PIPE INVERT IS 5'-0".
11. ANY PROTUDING ENDS OF PIPES SHALL BE TRIMMED FLUSH WITH THE INSIDE WALLS AND GROUTED TO THE SATISFACTION OF ENGINEER.
12. GUTTER IS TAPERED DOWN TO INLET.
13. INSTALL REMOVABLE APWA TYPE 60A TRAP OR EQUAL, SEE STD. PLAN D2.1.
14. CONTRACTOR SHALL HAVE THE OPTION OF FURNISHING PRECAST OR CAST-IN-PLACE INLET STRUCTURES, UNLESS SPECIFIED.

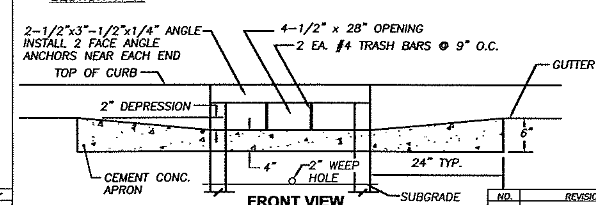

NO.	REVISIONS	DATE	BY

DWG: D2-0.DWG

Department of Public Works — CLARK COUNTY WASHINGTON — proud past, promising future

STANDARD TYPE 1 CURB INLET — APPROVED — COUNTY ENGINEER — 01/01/04 DATE — STANDARD PLAN No. D2.0 — DESIGNED SCH DRAWN SCH DATE 09/09/02

CATCH BASIN OUTLET PIPE TRAP (STANDARD PLAN D2.1)

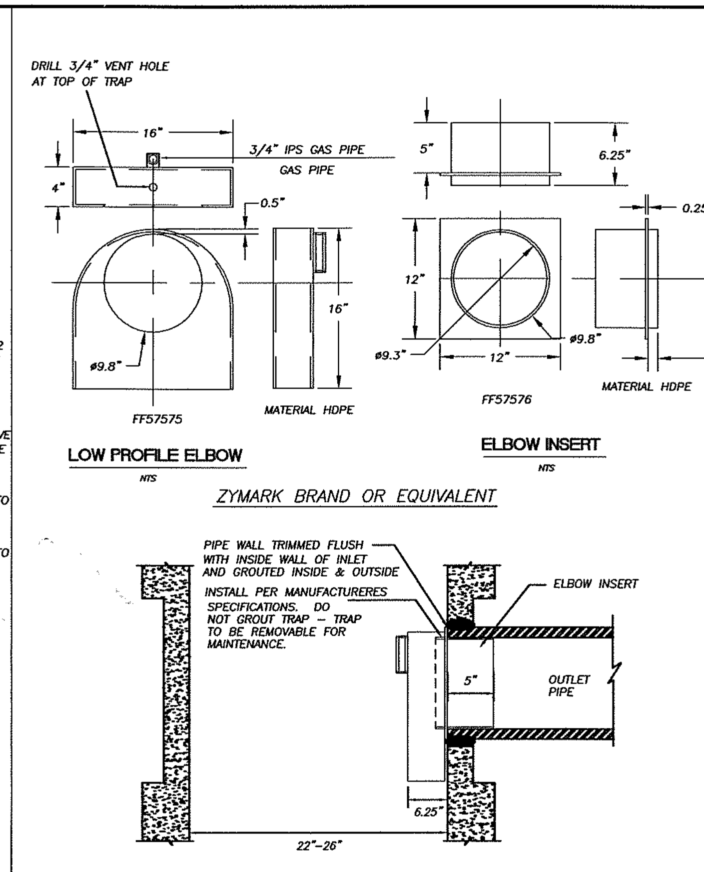

NO.	REVISIONS	DATE	BY

DWG: D2-1.DWG

Department of Public Works — CLARK COUNTY WASHINGTON — proud past, promising future

CATCH BASIN OUTLET PIPE TRAP — APPROVED — COUNTY ENGINEER — 01/01/04 DATE — STANDARD PLAN No. D2.1 — DESIGNED SCH DRAWN SCH DATE 09/23/02

STANDARD TYPE 1 COMBINATION CURB INLET (STANDARD PLAN D3.0)

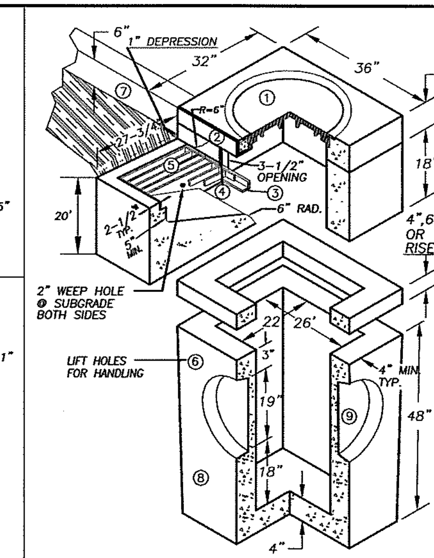

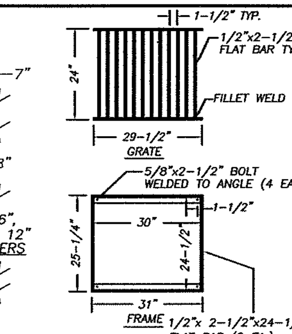

1. 24" x 3-1/2" CAST IRON LOCKING FRAME & COVER
2. 2-1/2"x3-1/2"x1/4"x 35 7/8" GALVANIZED ANGLE IRON
3. 2-1/2"x2-1/2"x3/8" FRAME GALVANIZED ANGLE IRON
4. 2 EA. #4 TRASH BARS @ 8" O.C.
5. 1/2"x2-1/2" FLAT BAR GALVANIZED GRATE
6. 2 EA. BASE UNIT LIFT HOLES
7. 6" CURB AND 12" GUTTERS
8. STANDARD TYPE 1 BASE UNIT
9. PIPE KNOCKOUTS ALL FOUR SIDES.

NOTES

1. COMBINATION CURB INLET TO BE CONSTRUCTED IN ACCORDANCE WITH ASTM C478 & C890 UNLESS SHOWN ON PLANS OR NOTED IN STANDARD SPECIFICATIONS.
2. REINFORCING FOR INLET UNIT, 3 EA. #4 HORZONTAL BARS; REINFORCING FOR TOP UNIT, 2 EA. #3 HORZONTAL BARS; REINFORCING FOR INLET SLOPED BASE, 4x4 MESH.
3. ALL REBAR TO MEET ASTM A615 GRADE 60.
4. AS AN ACCEPTABLE ALTERNATIVE TO REBAR, WELDED WIRE FABRIC HAVING A MIN. AREA OF 0.12 SQAURE INCHES PER FOOT MAY BE USED. WELDED WIRE FABRIC SHALL COMPLY TO ASTM A497. WIRE FABRIC SHALL NOT BE PLACED IN KNOCKOUTS.
5. ALL REINFORCED CAST-IN-PLACE CONCRETE SHALL BE CLASS 4,000.
6 PRECAST BASES SHALL BE FURNISHED WITH CUTOUTS OR KNOCKOUTS. KNOCKOUTS SHALL HAVE A WALL THICKNESS OF 2" MIN. ALL PIPE SHALL BE INSTALLED IN FACTORY PROVIDED KNOCKOUTS. UNUSED KNOCKOUTS NEED NOT BE GROUTED IF WALL IS LEFT INTACT.
7. KNOCKOUTS OR CUTOUT HOLE SIZE IS EQUAL TO PIPE OUTER DIAM. PLUS INLET WALL THICKNESS.
8. ROUND KNOCKOUTS MAY BE ON ALL 4 SIDES WITH MAX. DIAM. OF 17".
9. THE MAX. DEPTH FROM THE FINISHED GRADE TO THE PIPE INVERT IS 5'-0".
10. ANY PROTUDING ENDS OF PIPES SHALL BE TRIMMED FLUSH WITH THE INSIDE WALLS AND GROUTED TO THE SATISFACTION OF ENGINEER.
11. GRATE TO HAVE 1" DEPRESSION AT GUTTER INLET WITH GUTTER TO BE TAPERED DOWN TO INLET.
12. INSTALL REMOVABLE APWA TYPE 60A TRAP OR EQUAL, SEE STD. PLAN D2.1.
13. CONTRACTOR SHALL HAVE THE OPTION OF FURNISHING PRECAST OR CAST-IN-PLACE INLET STRUCTURES, UNLESS SPECIFIED.
14. SEE STD. PLAN 4.1 FOR BASIN GUTTER PAN DETAIL.

NO.	REVISIONS	DATE	BY

DWG: D3-0.DWG

Department of Public Works — CLARK COUNTY WASHINGTON — proud past, promising future

STANDARD TYPE 1 COMBINATION CURB INLET — APPROVED — COUNTY ENGINEER — 01/01/04 DATE — STANDARD PLAN No. D3.0 — DESIGNED SCH DRAWN SCH DATE 09/09/02

STANDARD CATCH BASIN TYPE 1 (STANDARD PLAN D4.0)

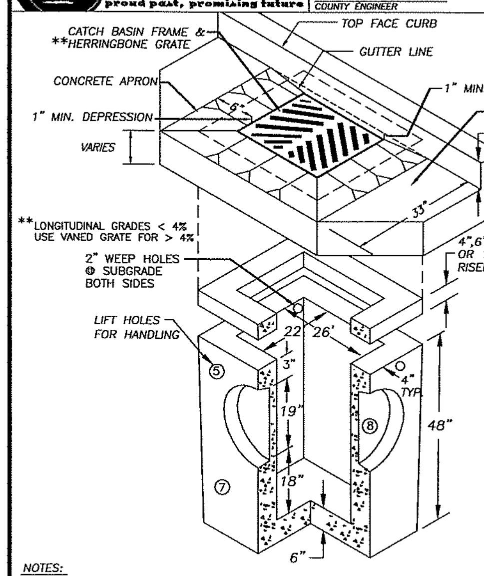

PIPE ALLOWANCES	
PIPE MATERIAL	MAXIMUM INSIDE DIAMETER
REINFORCED OR PLAIN CONCRETE	18"
ALL METAL PIPE	21"
CPSSP ✻ (Std. Spec. 9-05.20	18"
SOLID WALL PVC (Std. Spec. 9-05.12(1)	21"
PROFILE WALL PVC (Std. Spec. 9-05.12(2)	21"

✻CORRUGATED POLYETHYLENE STORM SEWER PIPE

NOTES:

1. CURB INLET TO BE CONSTRUCTED IN ACCORDANCE WITH ASTM C478 (AASHTO) M 199) & C890 UNLESS SHOWN ON PLANS OR NOTED IN STANDARD SPECIFICATIONS.
2. REINFORCING FOR INLET UNIT, 3 EA. #4 HORIZONTAL BARS.
3. REINFORCING FOR TOP UNIT, 2 EA. #3 HORIZONTAL BARS.
4. ALL REBAR TO MEET ASTM A615 GRADE 60.
5. AS AN ACCEPTABLE ALTERNATIVE TO REBAR, WELDED WIRE FABRIC HAVING A MIN. AREA OF 0.12 SQUARE INCHES PER FOOT MAY BE USED. WELDED WIRE FABRIC SHALL COMPLY TO ASTM A497. WIRE FABRIC SHALL NOT BE PLACED IN KNOCKOUTS.
6. ALL REINFORCED CAST-IN-PLACE CONCRETE SHALL BE CLASS 4,000.
7. PRECAST BASES SHALL BE FURNISHED WITH CUTOUTS OR KNOCKOUTS. KNOCKOUTS SHALL HAVE A WALL THICKNESS OF 2" MIN. ALL PIPE SHALL BE INSTALLED IN FACTORY PROVIDED KNOCKOUTS. UNUSED KNOCKOUTS NEED NOT BE GROUTED IF WALL IS LEFT INTACT.
8. KNOCKOUTS OR CUTOUT HOLE SIZE IS EQUAL TO PIPE OUTER DIAM. PLUS INLET WALL THICKNESS.
9. ROUND KNOCKOUTS MAY BE ON ALL 4 SIDES WITH MAX. DIAM. OF 20".
10. THE MAX. DEPTH FROM THE FINISHED GRADE TO THE PIPE INVERT IS 5'-0".
11. ANY PROTRUDING ENDS OF PIPES SHALL BE TRIMMED FLUSH WITH THE INSIDE WALLS AND GROUTED TO THE SATISFACTION OF ENGINEER.
12. CATCH BASIN FRAME AND GRATE SHALL BE IN ACCORDANCE WITH WDOT STANDARD SPECIFICATIONS AND MEET THE STRENGTH REQUIREMENTS OF FEDERAL SPECIFICATION RR-F-621D. MATING SURFACES SHALL BE FINISHED TO ASSURE NON-ROCKING FIT WITH ANY COVER POSITION.
13. FRAME MAY BE INSTALLED WITH FLANGE DOWN OR CAST INTO RISER.
14 INSTALL REMOVABLE APWA TYPE 60A TRAP OR EQUAL, SEE STD. PLAN D2.1.
15. CONTRACTOR SHALL HAVE THE OPTION OF FURNISHING PRECAST OR CAST-IN-PLACE INLET STRUCTURES, UNLESS SPECIFIED.

NO.	REVISIONS	DATE	BY

DWG: D4-0.DWG

Department of Public Works — CLARK COUNTY WASHINGTON — proud past, promising future

STANDARD CATCH BASIN TYPE 1 — APPROVED — COUNTY ENGINEER — 01/01/04 DATE — STANDARD PLAN No. D4.0 — DESIGNED SCH DRAWN SCH DATE 07/07/03

CATCH BASIN GUTTER PAN (STANDARD PLAN D4.1)

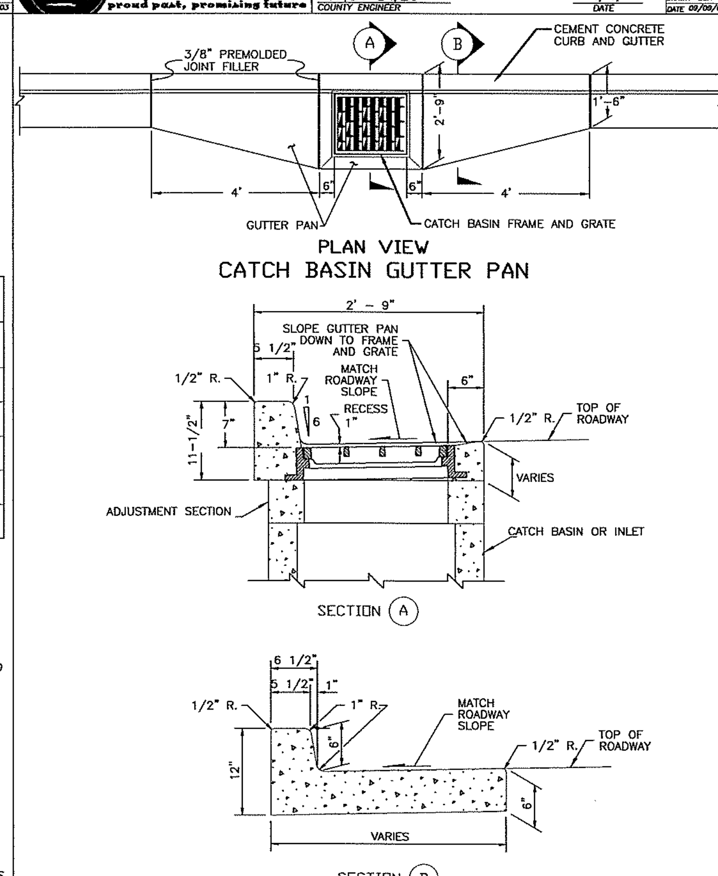

NO.	REVISIONS	DATE	BY

DWG: D4-1DWG

Department of Public Works — CLARK COUNTY WASHINGTON — proud past, promising future

CATCH BASIN GUTTER PAN — APPROVED — COUNTY ENGINEER — 01/01/04 DATE — STANDARD PLAN No. D4.1 — DESIGNED SCH DRAWN SCH DATE 07/07/03

REVERSIBLE FRAME FOR CATCH BASIN (STANDARD PLAN D4.2)

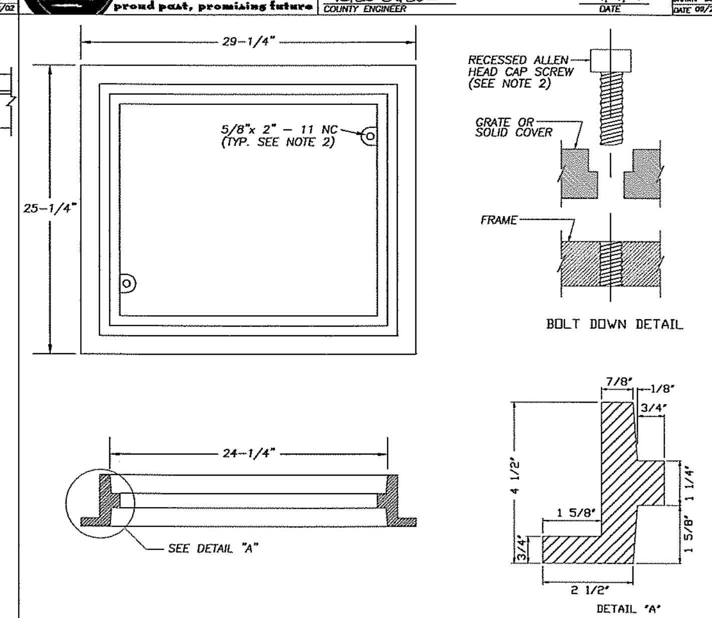

NOTES

1. THIS FRAME IS DESIGNED TO ACCOMODATE 20"x 24" GRATES OR COVERS AS SHOWN ON STD. PLANS D4.3 AND D4.4.
2. WHEN BOLT DOWN GRATES OR COVERS ARE SPECIFIED, PROVIDE TWO HOLES IN THE FRAME THAT ARE VERTICALLY ALIGNED WITH THE GRATE OR COVER SLOTS. TAP EACH HOLE TO ACCEPT A 5/8"x 2" – 11 NC ALLEN HEAD CAP SCREW. LOCATION OF BOLT DOWN HOLES VARIES AMONG DIFFERENT MANUFACTURERS.
3. REFER TO WSDOT STANDARD SPECIFICATION 9–05.15(2) FOR ADDITIONAL REQUIREMENTS.
4. SEE WSDOT STD. SPEC. SECTION 7.05.

NO.	REVISIONS	DATE	BY

DWG: D4-2.dwg

Department of Public Works — CLARK COUNTY WASHINGTON — proud past, promising future

REVERSIBLE FRAME FOR CATCH BASIN — APPROVED — COUNTY ENGINEER — 01/01/04 DATE — STANDARD PLAN No. D4.2 — DESIGNED SCH DRAWN SCH DATE 07/07/03

VANE GRATE FOR CATCH BASIN (STANDARD PLAN D4.4)

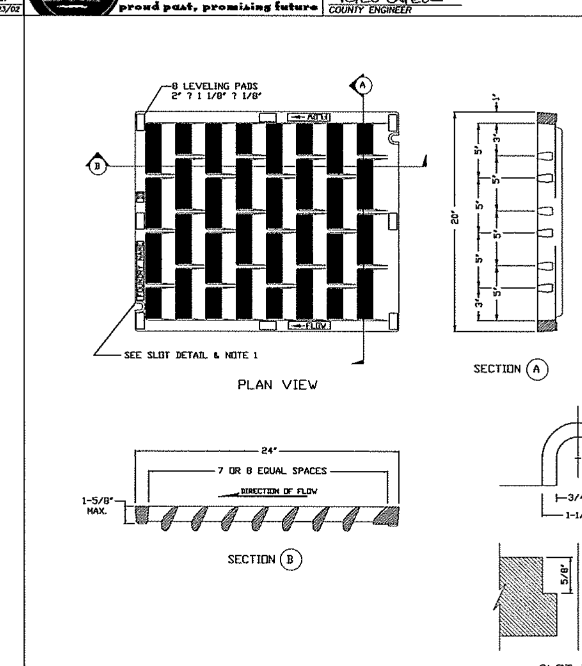

NOTES

1. WELDING NOT PERMITTED
2. USE HERRINGBONE GRATE PER STD. PLAN D4.3 WHERE LONGITUDINAL SLOPE IS LESS THAN 4%.
3. WHEN BOLT DOWN GRATES ARE SPECIFIED, PROVIDE TWO SLOTS IN THE GRATE THAT ARE VERTICALLY ALIGNED WITH THE HOLES IN THE FRAME. LOCATION OF BOLT DOWN SLOTS VARIES AMONG DIFFERENT MANUFACTURERS.
4. REFER TO WSDOT STANDARD SPECIFICATION 9–05.15(2) FOR ADDITIONAL REQUIREMENTS.
5. FOR FRAME DETAIL, SEE STD. PLAN D4.2

FOR INFORMATIONAL PURPOSES ONLY

ALL PLAN DETAIL AND INFORMATION IS NOT SHOWN ON THIS 90% COMPLETED SET OF PLANS.

90% SUBMITTAL - JULY 2004

NO.	REVISIONS	DATE	BY

DWG: D4-4.dwg

Department of Public Works — CLARK COUNTY WASHINGTON — proud past, promising future

VANE GRATE FOR CATCH BASIN — APPROVED — COUNTY ENGINEER — 01/01/04 DATE — STANDARD PLAN No. D4.4 — DESIGNED SCH DRAWN SCH DATE 07/07/03

CLARK COUNTY WASHINGTON — proud past, promising future

DESIGN & ENGINEERING DIVISION

NE 88TH STREET STORM DETAILS

HHPR Harper Houf Peterson Righellis Inc.
ENGINEERS • PLANNERS • SURVEYORS
1104 MAIN STREET, SUITE 100, VANCOUVER, WA 98660
TEL 360.750.1131 www.hhpr.com FAX 360.750.1141

CALL 48 HOURS BEFORE YOU DIG
1-800-553-4344
"It's the Law"
NORTHWEST UTILITIES NOTIFICATION CENTER

DESIGNED:	TSH
DRAWN:	NPR
CRP:	330222
HOR.	1" = 60'
VERT.	N/A
DATE:	7/2004
DWG:	
SHEET	18 OF 99

P:\Crk-12 (NE 88th)\CRK12-DWGS\ Crk12-DT02.DWG

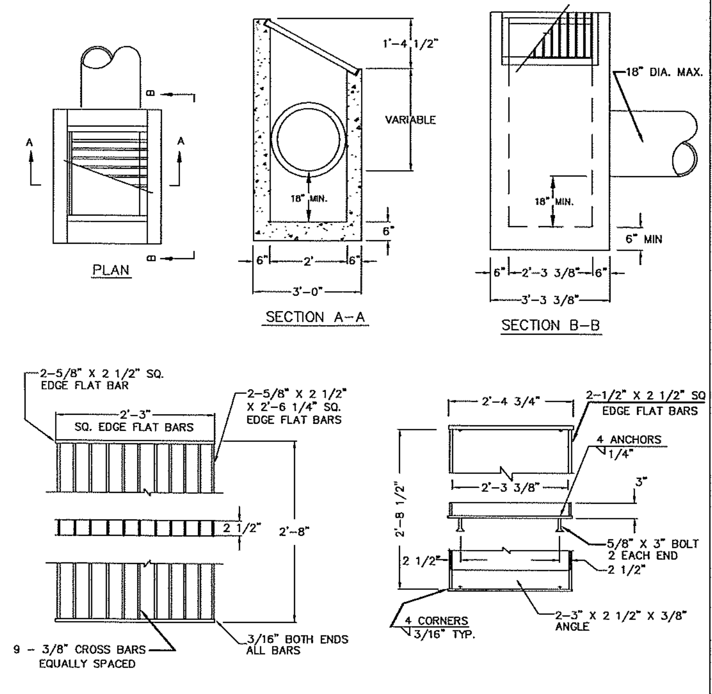

NOTES:
1. DITCH INLET CONSTRUCTION IN ACCORDANCE WITH ASTM C-478
2. CATCH BASIN, FRAME, AND GRATES SHALL BE FLAT BAR STEEL OR APPROVED EQUAL.
3. INSIDE FRAME DIMENSIONS: 2'-3 3/8"x 2'-8 1/2"".
4. 3/8" CROSS BARS SHALL BE FLUSH WITH THE GRATE SURFACE AND MAY BE FILLET WELDED, RESISTANCE WELDED OR ELECTROFORGED TO BEARING BARS.

Department of Public Works, CLARK COUNTY WASHINGTON, proud past, promising future	DITCH INLET / APPROVED / COUNTY ENGINEER / 01/01/04 DATE	STANDARD PLAN No. D6

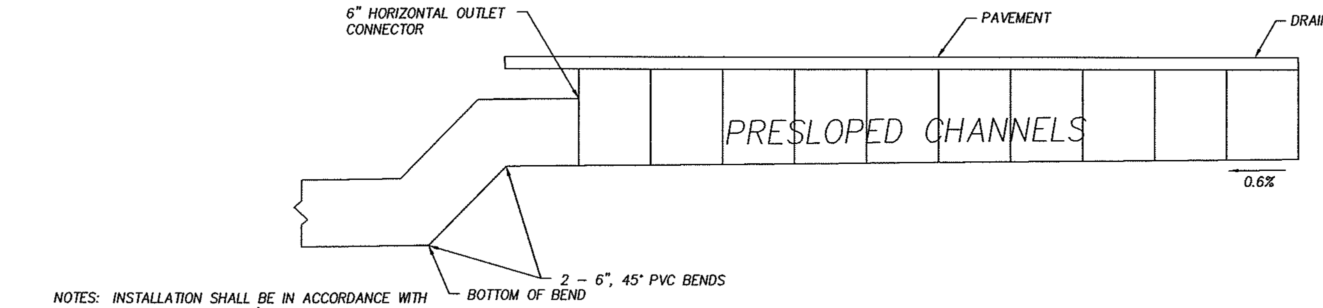

NOTES: INSTALLATION SHALL BE IN ACCORDANCE WITH THE MANUFACTURER'S RECOMMENDATIONS. DRAIN SHALL BE PLACED IN CONCRETE ON FIRM NATIVE SOILS.

A MINIMUM OF 4" OF CONCRETE BEDDING MUST BE PLACED ON ALL SIDES OF THE CHANNEL AND CATCH BASINS PER THE MANUFACTURER'S RECOMMENDATION.

TRENCH DRAIN SYSTEM PROFILE

N.T.S.

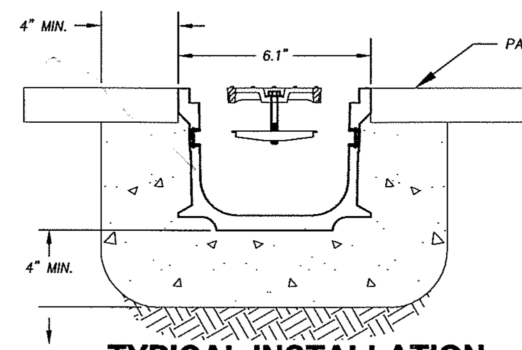

TYPICAL INSTALLATION

GRATE
H20 LOADING
N.T.S.

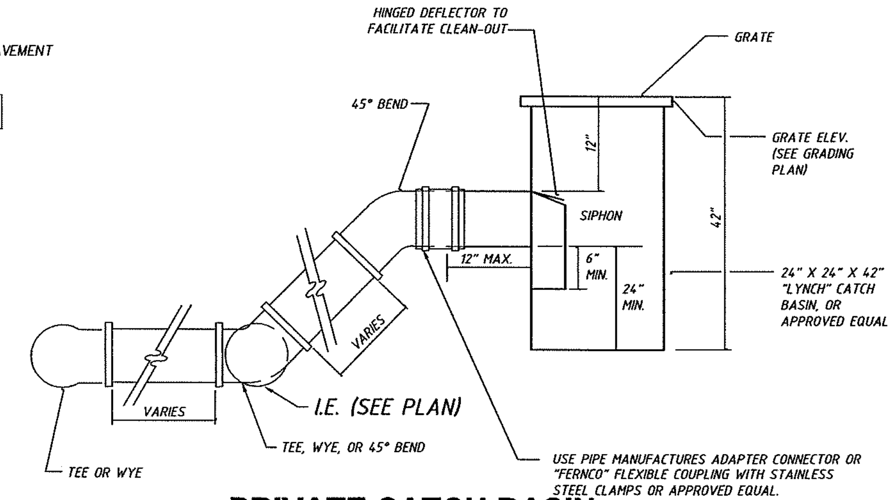

PRIVATE CATCH BASIN

N.T.S.

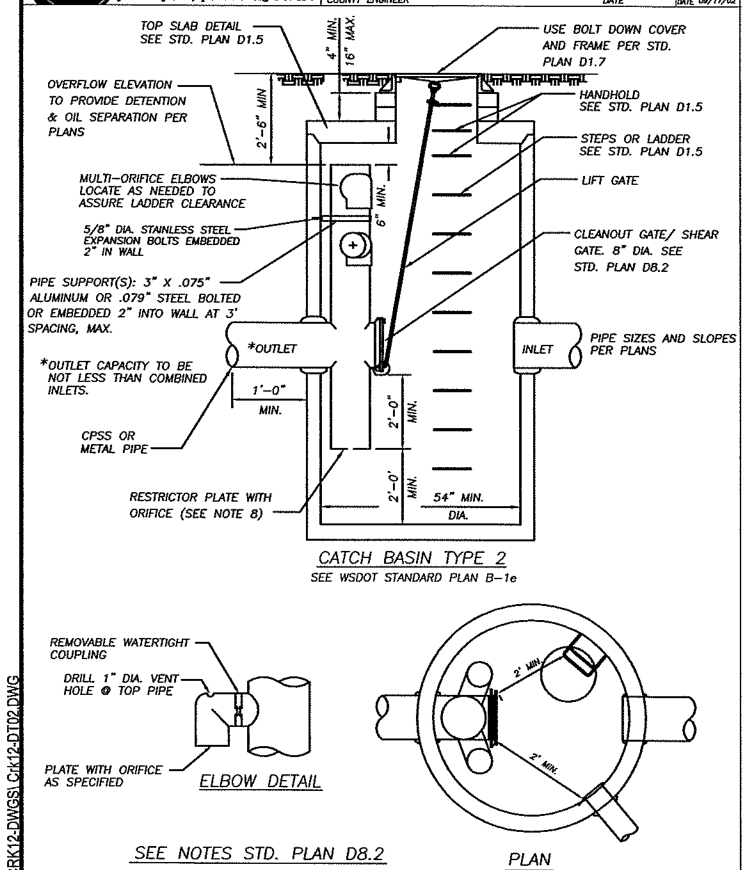

SEE NOTES STD. PLAN D8.2

Department of Public Works, CLARK COUNTY WASHINGTON, proud past, promising future	SHEET 1 OF 2 / FLOW CONTROL MANHOLE TEE TYPE (CONTINUED ON D8.2) / APPROVED / COUNTY ENGINEER / 01/01/04 DATE	STANDARD PLAN No. D8.1

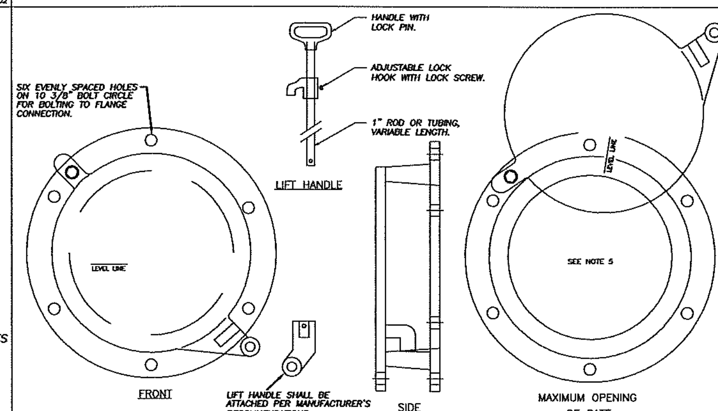

SHEAR GATE NOTES
1. SHEAR GATE SHALL BE ALUMINUM ALLOY PER ASTM B-26-ZG-32a OR CAST IRON ASTM A48 CLASS 30B AS REQUIRED.
2. GATE SHALL BE 8" DIAM. UNLESS OTHERWISE SPECIFIED.
3. GATE SHALL BE JOINED TO TEE SECTION BY BOLTING (THROUGH FLANGE), WELDING, OR OTHER SECURE MEANS.
4. LIFT ROD: AS SPECIFIED BY MFR. WITH HANDLE EXTENDING TO WITHIN ONE FOOT OF COVER AND ADJUSTABLE HOOK LOCK FASTENED TO FRAME OR UPPER HANDHOLD.
5. GATE SHALL NOT OPEN BEYOND THE CLEAR OPENING BY LIMITED HINGE MOVEMENT, STOP TAB, OR SOME OTHER DEVICE.
6. NEOPRENE RUBBER GASKET REQUIRED BETWEEN RISER MOUNTING FLANGE AND GATE FLANGE.
7. MATING SURFACES OF LID AND BODY TO BE MACHINED FOR PROPER FIT.
8. FLANGE MOUNTING BOLTS SHALL BE 3/8" DIAM. STAINLESS STEEL.
9. ALTERNATE CLEANOUT/SHEAR GATES TO THE DESIGN SHOWN ARE ACCEPTABLE, PROVIDED THEY MEET THE MATERIAL SPECIFICATIONS ABOVE AND HAVE A SIX BOLTS, 10-3/8" BOLT CIRCLE FOR BOLTING TO THE FLANGE CONNECTION.

FLOW CONTROL DEVICE NOTES
1. EXCEPT AS SHOWN OR NOTED, UNITS SHALL BE CONSTRUCTED IN ACCORDANCE WITH THE REQUIREMENTS FOR WSDOT CATCH BASIN TYPE 2, 54" MIN. DIA.
2. FOR DETAILS SHOWING GRADE RING, LADDER, STEPS, HANDHOLDS, AND TOP SLABS, SEE STD. PLAN D1.5.
3. THE RESTRICTOR/SEPARATOR AND PIPE SUPPORTS SHALL BE OF THE SAME MATERIAL AND SHALL BE FABRICATED FROM 0.060" ALUMINUM OR 0.064" ALUMINIZED STEEL OR 0.064" GALVANIZED STEEL PIPE IN ACCORDANCE WITH AASHTO M 36, M 196, M 197 AND M 274. GALVANIZED STEEL SHALL HAVE TREATMENT 1.
4. OUTLET SHALL BE CONNECTED TO CULVERT OR SEWER PIPE WITH A STANDARD COUPLING BAND FOR CORRUGATED METAL PIPE OR GROUTED INTO THE BELL OF CONCRETE PIPE.
5. THE VERTICAL RISER STEM OF THE RESTRICTOR/SEPARATOR SHALL BE THE SAME DIAMETER AS THE HORIZONTAL OUTLET PIPE WITH AN 8" MIN. SIZE.
6. FRAME AND LATTER, OR STEPS TO BE OFFSET SO THAT:
A. CLEANOUT GATE IS VISIBLE FROM TOP
B. CLIMB-DOWN SPACE IS CLEAR OF RISER AND CLEANOUT GATE.
C. FRAME IS CLEAR OF CURB (IF ANY EXISTS).
7. MULTI-ORIFICE ELBOWS MAY BE LOCATED AS SHOWN OR ALL ON ONE SIDE OF RISER TO ASSURE LADDER CLEARANCE. SIZE OF ELBOWS TO BE DETERMINED BY ENGINEER.
8. RESTRICTOR PLATE WITH ORIFICE AS SPECIFIED IN THE PLANS. OMIT PLATE IF ONLY FOR OIL POLLUTION CONTROL. SPECIFIED OPENING TO BE CUT ROUND AND SMOOTH EDGED.

Department of Public Works, CLARK COUNTY WASHINGTON, proud past, promising future	SHEET 2 OF 2 / FLOW CONTROL MANHOLE, TEE TYPE (CONTINUED) SHEAR GATE DETAIL & NOTES / APPROVED / COUNTY ENGINEER / 01/01/04 DATE	STANDARD PLAN No. D8.2

NOTES:
1. PROPRIETARY MANHOLE HANDHOLDS AND STEPS ARE ACCEPTABLE, PROVIDED THAT THEY CONFORM TO SEC. R, ASTM C478, AASHTO M199 AND MEET ALL WISHA REQUIREMENTS.
2. MANHOLE STEP/HANDHOLD LEGS SHALL BE PARALLEL OR APPROXIMATELY RADIAL AT THE OPTION OF THE MANUFACTURER, EXCEPT THAT ALL STEPS IN ANY MANHOLE SHALL BE SIMILAR. PENETRATION OF OUTER WALL BY A LEG IS PROHIBITED.
3. HANDHOLDS AND STOPS SHALL HAVE "DROP" RUNGS OR PROTUBERANCES TO PREVENT SIDEWAYS SLIP.
4. LADDERS OR STEPS SHALL EXTEND TO WITHIN 16" OF BOTTOM OF MANHOLE.
5. HANGING LADDERS SHALL BE PERMANENTLY FASTENED AT TOP BY HANGING ON STEP OR BY BOLTING OR EMBEDDING IN CONCRETE. EACH SHALL BE EMBEDDED AT BOTTOM IN BASE.
6. ADDITIONAL SAFETY FEATURES MAY BE REQUIRED IN VERY DEEP OR UNUSUAL STRUCTURES.

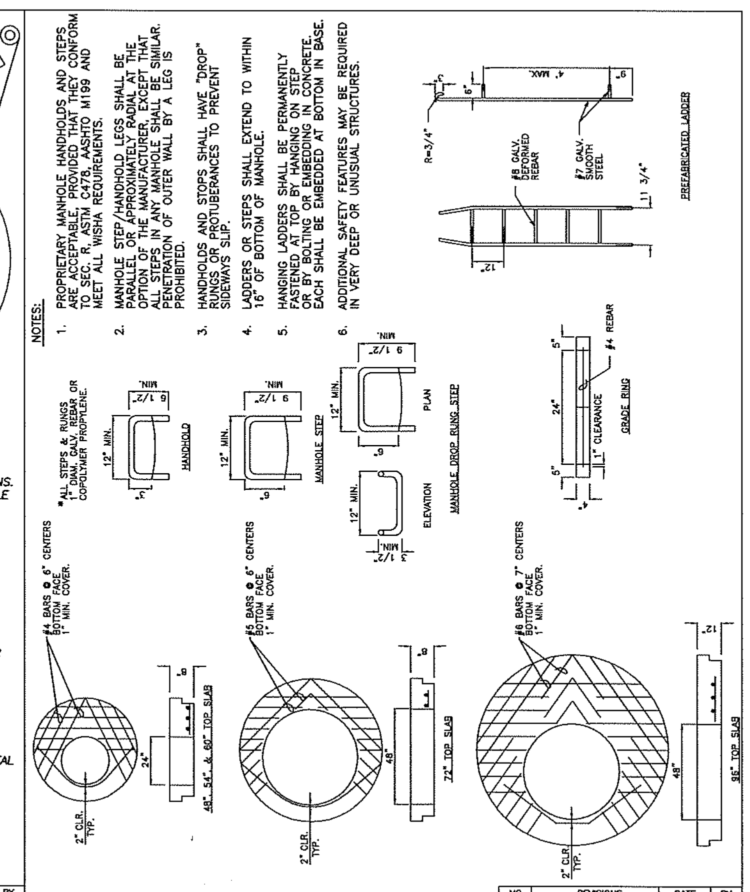

Department of Public Works, CLARK COUNTY WASHINGTON, proud past, promising future	MANHOLE DETAILS / APPROVED / COUNTY ENGINEER / 01/01/04 DATE	STANDARD PLAN No. D1.5

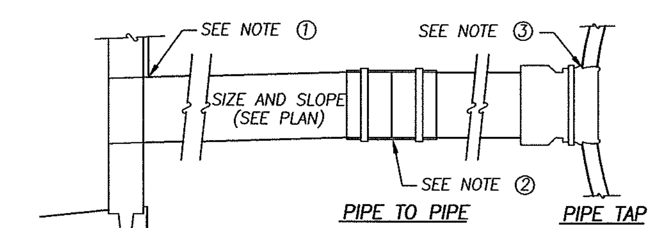

MANHOLE OR CATCH BASIN

① BREAK OUT WALL 2" MIN., 4" MAX. CLEAR OF PIPE WALL. GROUT SPACE WITH NON-SHRINK GROUT.

② USE "FERNCO" FLEXIBLE COUPLING WITH STAINLESS STEEL CLAMPS OR APPROVED EQUAL. FOR PIPES OVER 24" A CONCRETE FIELD COUPLING CAN BE USED IN LIEU OF A FLEXIBLE COUPLING.

③ CUT HOLE INTO PIPE AND INSTALL "FOWLER" SEWER BOOT TAP OR APPROVED EQUAL.

STORM DRAINAGE CONNECTIONS

N.T.S.

FOR INFORMATIONAL PURPOSES ONLY
ALL PLAN DETAIL AND INFORMATION IS NOT SHOWN ON THIS 90% COMPLETED SET OF PLANS.
90% SUBMITTAL - JULY 2004

CLARK COUNTY WASHINGTON — proud past, promising future

DESIGN & ENGINEERING DIVISION

NE 88TH STREET STORM DETAILS

Harper Houf Peterson Righellis Inc. (HHPR)
ENGINEERS • PLANNERS • SURVEYORS
1104 MAIN STREET, SUITE 100, VANCOUVER, WA 98660
TEL 360.750.1131 www.hhpr.com FAX 360.750.1141

CALL 48 HOURS BEFORE YOU DIG
1-800-553-4344
"It's the Law"
NORTHWEST UTILITIES NOTIFICATION CENTER

DESIGNED:	TSH
DRAWN:	NPR
CRP:	330222
HOR.	1" = 60'
VERT.	N/A
DATE:	7/2004
DWG:	
SHEET	19 OF 99

P:\Crk-12 (NE 88th)\CRK12-DWGS\ Crk12-DT02.DWG

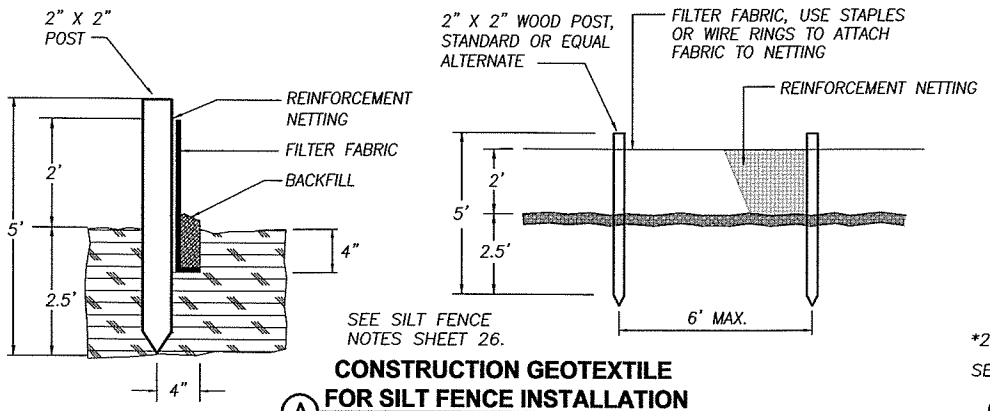

CONSTRUCTION GEOTEXTILE FOR SILT FENCE INSTALLATION

(A) N.T.S.

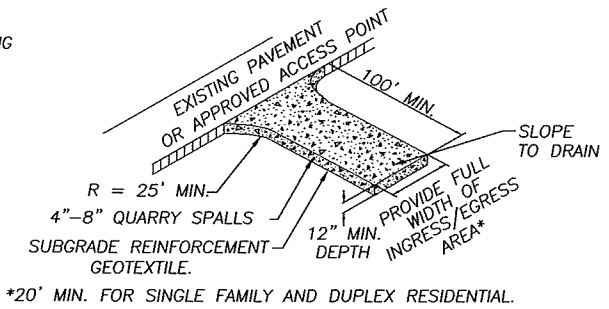

*20' MIN. FOR SINGLE FAMILY AND DUPLEX RESIDENTIAL.

SEE EROSION CONTROL NOTE 8.

STABLILIZED CONSTRUCTION ENTRANCE

(B) N.T.S.

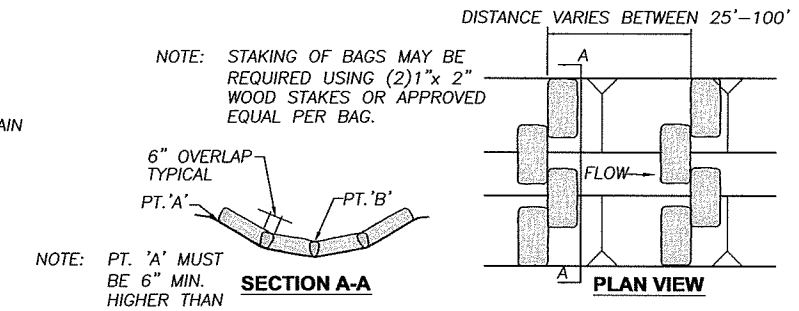

POROUS SEDIMENT CONTROL SYSTEMS

(C) N.T.S.

CONSTRUCTION NOTES

(A) INSTALL CONSTRUCTION GEOTEXTILE FOR SILT FENCE PER EROSION CONTROL DETAIL 'A'.

(B) INSTALL STABILIZED CONSTRUCTION ENTRANCE PER EROSION CONTROL DETAIL 'B'. LOCATE AS NECESSARY.

(C) INSTALL POROUS SEDIMENT CONTROL SYSTEMS PER EROSION CONTROL DETAIL 'C'

(D) CONSTRUCT TIRE WASH PER EROSION CONTROL DETAIL 'D'.

(E) INSTALL ORANGE CONSTRUCTION FENCE.

(F) INSTALL STORM DRAIN INLET PROTECTION PER EROSION CONTROL DETAIL 'F'.

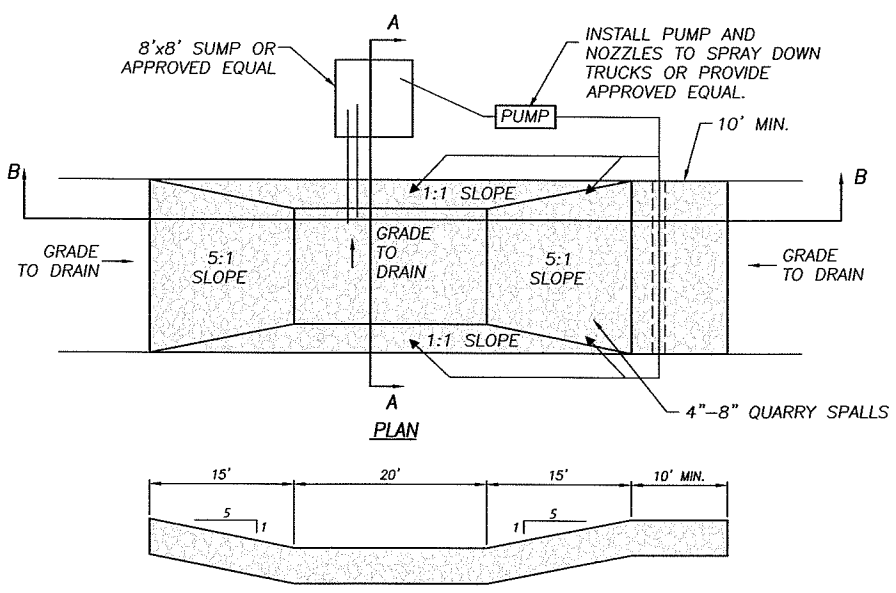

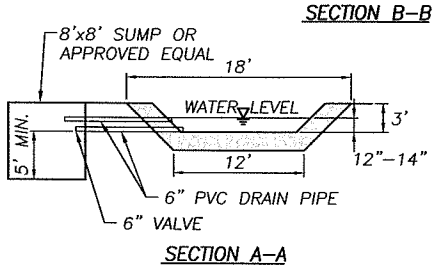

TIRE WASH DETAIL

(D) N.T.S.

NOTES:

1. INSTALL TIRE WASH WHEN A STABILIZED CONSTRUCTION ENTRANCE IS NOT PREVENTING SEDIMENT FROM BEING TRACKED ONTO PAVEMENT.
2. THE SURFACE PAD SHALL HAVE DIRECT DRAINAGE TO THE LARGE 8'x8' SUMP.
3. WATER LEVEL TO BE KEPT AT 12 TO 14 INCHES DEEP TO AVOID DAMAGE TO TRUCK HUBS AND FILLING THE TRUCK TONGUES WITH WATER.
4. PROVIDE A SMALL GRADE CHANGE, SIX TO TWELVE INCHES FOR A 10–FOOT–WIDE POND, TO ALLOW SEDIMENT TO FLOW TO THE LOW SIDE OF THE POND TO HELP PREVENT RE–SUSPENTION OF SEDIMENT.

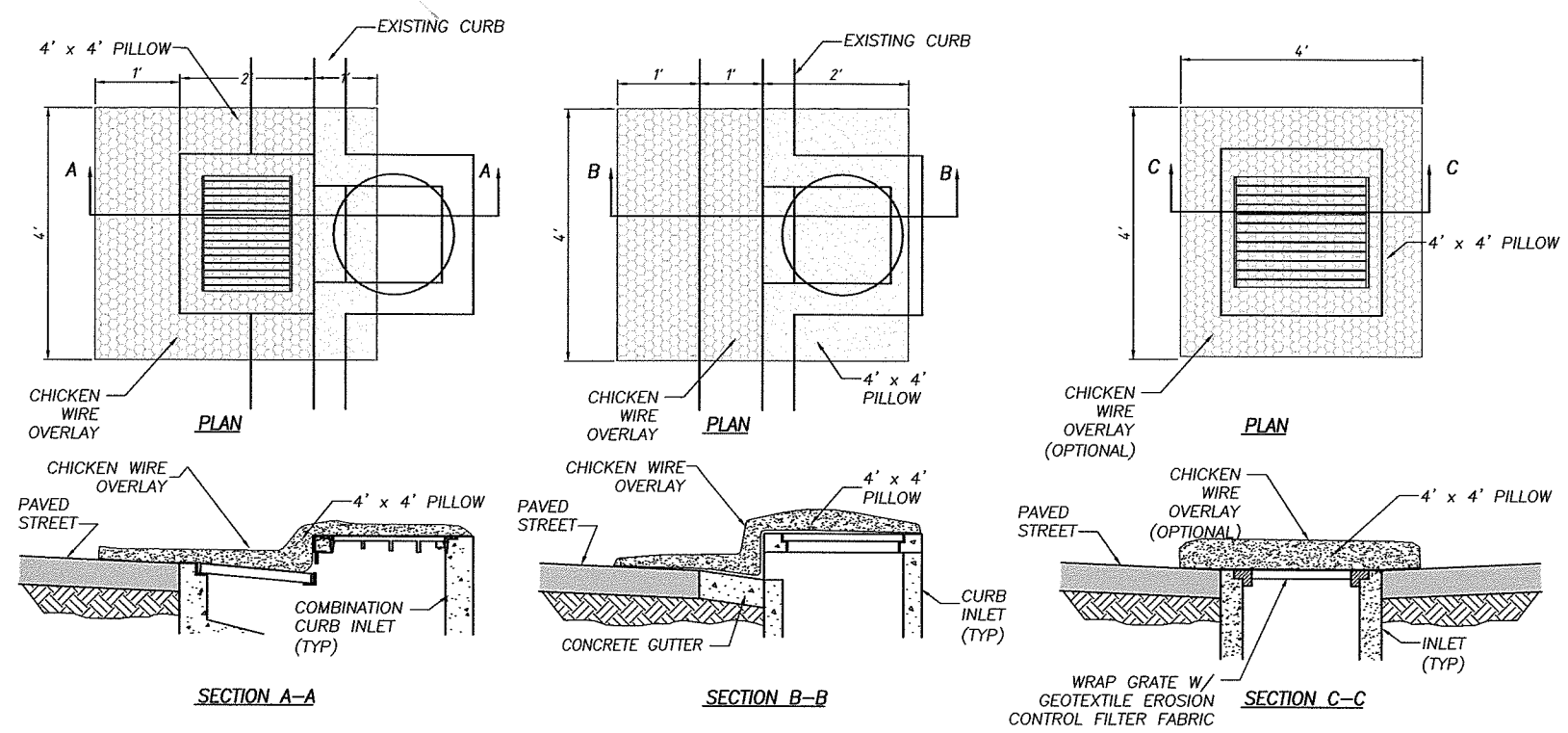

NOTES:

1) IN–DRAIN FILTERS AND BIO BAGS ARE ACCEPTABLE ALTERNATE METHODS OF INLET PROTECTION. STRAW BALES ARE NOT AN ACCEPTABLE METHOD OF INLET PROTECTION. ANY ALTERNATE METHOD OF INLET PROTECTION SHALL BE APPROVED BY THE ENGINEER.

2) INLET PROTECTION PILLOWS SHALL BE POLYESTER FABRIC (ASTM–D191 OR EQUAL) AND SHALL BE FILLED WITH 15–16 LBS OF WOOD CHIP FILLER.

3) IN TRAFFIC AREAS, THE CONTRACTOR SHALL USE AN ALTERNATIVE METHOD OF ANCHORING PILLOWS OR AN ALTERNATIVE METHOD OF INLET PROTECTION. ANY ALTERNATIVE METHOD SHALL BE APPROVED BY THE ENGINEER.

STORM DRAIN INLET PROTECTION

(F) N.T.S.

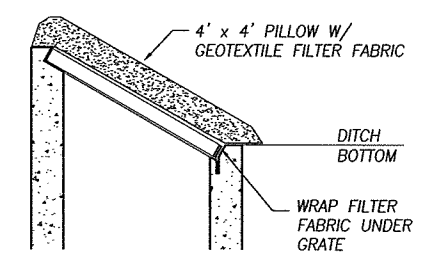

TYPICAL DITCH INLET

FOR INFORMATIONAL PURPOSES ONLY

ALL PLAN DETAIL AND INFORMATION IS NOT SHOWN ON THIS 90% COMPLETED SET OF PLANS.

90% SUBMITTAL - JULY 2004

DESIGNED:	TSH
DRAWN:	NPR
CRP:	330222
HOR.	N/A
VERT.	N/A
DATE:	7/2004
DWG:	SHEET 20 OF 99

CALL 48 HOURS BEFORE YOU DIG 1–800–553–4344 "It's the Law" NORTHWEST UTILITIES NOTIFICATION CENTER

Harper Houf Peterson Righellis Inc.
ENGINEERS • PLANNERS • SURVEYORS
1104 MAIN STREET, SUITE 100, VANCOUVER, WA 98660
TEL 360.750.1131 www.hhpr.com FAX 360.750.1141

DESIGN & ENGINEERING DIVISION

NE 88TH STREET EROSION CONTROL DETAILS

proud past, promising future

CLARK COUNTY WASHINGTON

P:\Clk-12 (NE 88th)\CRK12-DWGS\ Crk12-EC.DWG

EROSION CONTROL

1. ALL CONSTRUCTION ACTIVITIES SHALL COMPLY WITH THE CLARK COUNTY STORMWATER AND EROSION CONTROL ORDINANCE, CCC 13.27A, DATED NOVEMBER 1999. ALL EROSION AND SEDIMENT CONTROL MEASURES SHALL BE INSTALLED AND MAINTAINED IN ACCORDANCE WITH THE STORMWATER MANAGEMENT MANUAL OF THE PUGET SOUND BASIN DEVELOPED BY THE WASHINGTON DEPARTMENT OF ECOLOGY, DATED FEBRUARY 1992.

2. ALL EROSION AND SEDIMENT CONTROL MEASURES ARE TO BE PLACED PRIOR TO ANY DISTURBANCE CAUSED BY CLEARING OR GRADING. NEWLY CONSTRUCTED OR MODIFIED INLETS AND CATCH BASINS ARE TO BE PROTECTED IMMEDIATELY UPON INSTALLATION. ALL DISTURBED AND EXPOSED SOILS SHALL BE STABILIZED BY THE APPROPRIATE BMP. DURING THE PERIOD FROM OCTOBER 1 TO APRIL 30, NO SOIL SHALL BE EXPOSED FOR MORE THAN TWO (2) DAYS. FROM MAY 1 TO SEPTEMBER 30, NO SOIL SHALL BE EXPOSED FOR MORE THAN SEVEN (7) DAYS.

3. THE CONTRACTOR SHALL DESIGNATE IN WRITING A CONTACT PERSON WHO WILL BE THE EROSION PREVENTION AND SEDIMENTATION CONTROL (EPSC) LEAD. THE EPSC LEAD SHALL BE AUTHORIZED ON BEHALF OF THE CONTRACTOR TO EXECUTE ANY NECESSARY ACTION TO IMPLEMENT BMP'S TO PREVENT EROSION AND TO CONTROL SEDIMENT.

   THE DUTIES OF THE EPSC LEAD SHALL BE TO:

   * BE AVAILABLE 24 HOURS A DAY TO RESPOND TO EMERGENCIES, INQUIRIES, AND DIRECTIVES FROM THE CONTRACTING AGENCY REGARDING EROSION CONTROL ISSUES.

   * PHYSICALLY INSPECT ALL BMP'S EACH WORKING DAY (WORKING DAY AS DEFINED IN THE CONTRACT SPECIFICATIONS)

   * PREPARE AND SUBMIT A DAILY REPORT THAT SHALL BE A SUMMARY OF THE DAY'S EROSION CONTROL PREVENTION ACTIVITIES.

   * MAINTAIN THE REQUIRED BMP LOG AND MAINTAIN THE EROSION AND SEDIMENT CONTROL PLAN ON SITE.

   * PROVIDE A SCHEDULE OF DATES WHEN MAJOR GRADING EVENTS WILL OCCUR, WHEN CONSTRUCTION WILL TEMPORARILY CEASE, AND WHEN STABILIZATION MEASURES ARE INITIALIZED.

   * IMPLEMENT BMP'S DIRECTED BY THE ENGINEER.

   THE EPSC LEAD SHALL IMPLEMENT THE TEMPORARY EROSION AND SEDIMENTATION CONTROL (TESC) AND SPILL PREVENTION CONTROL AND COUNTERMEASURES (SPCC) PLANS. IMPLEMENTATION OF THE TESC AND SPCC PLANS SHALL INCLUDE, BUT IS NOT LIMITED TO:

   * INSTALLING, MAINTAINING, INSPECTING AND REPAIRING ALL TEMPORARY EROSION AND SPILL CONTROL BEST MANAGEMENT PRACTICES (BMP'S) INCLUDED IN THE TESC AND SPCC PLANS. ALL BMP'S SHALL BE INSPECTED, MAINTAINED, AND REPAIRED AS NEEDED TO ASSURE CONTINUED PERFORMANCE OF THEIR INTENDED FUNCTION.

   * ALL ON-SITE EROSION AND SEDIMENT CONTROL MEASURES SHALL BE INSPECTED AT LEAST ONCE EACH DAY AND WITHIN 24 HOURS AFTER ANY STORM EVENT GREATER THAN 0.5 INCHES WITHIN A 24 HOUR PERIOD OR ANY GREAT WIND STORM. ALL SPILLS SHALL BE RESPONDED TO AS OUTLINED IN THE SPCC PLAN. DAMAGED OR INADEQUATE TESC MEASURES SHALL BE CORRECTED WITHIN 24 HOURS OF THE INSPECTION. A TEMPORARY EROSION AND SPILL CONTROL REPORT SHALL BE PREPARED FOR EACH INSPECTION AND SHALL BE INCLUDED IN THE TESC AND SPCC FILES. THE INSPECTION REPORT SHALL INCLUDE, BUT NOT BE LIMITED TO:

     1. WHEN, WHERE, AND HOW BMP'S WERE INSTALLED, REMOVED OR MODIFIED

     2. REPAIRS NEEDED OR MADE

     3. OBSERVATIONS OF BMP EFFECTIVENESS AND PROPER PLACEMENT

     4. RECOMMENDATIONS FOR IMPROVING PERFORMANCE OF BMP'S

4. THE CONTRACTOR IS SOLELY RESPONSIBLE FOR PROTECTION OF ALL ADJACENT PROPERTIES AND DOWNSTREAM FACILITIES FROM EROSION AND SILTATION DURING THE COURSE OF THE WORK. ANY DAMAGE RESULTING FROM SUCH EROSION AND SILTATION SHALL BE CORRECTED AT THE SOLE EXPENSE OF THE CONTRACTOR.

5. IT IS THE INTENT OF THESE PLANS TO SHOW POSSIBLE APPLICATIONS OF RECOMMENDED EROSION AND SEDIMENT CONTROL MEASURES. ALL RECOMMENDED MEASURES ARE DEPENDENT ON CONSTRUCTION METHODS, STAGING, SITE CONDITIONS, WEATHER, AND SCHEDULING. THE MEASURES SHOWN ON THE PLANS ARE NOT INTENDED TO BE EXCLUSIVE OF ALL THE PROTECTION REQUIRED IN AN AREA AT A PARTICULAR INSTANT. THEY SHOULD BE USED AS A GUIDELINE ONLY.

6. TEMPORARY EROSION CONTROL METHODS MUST REMAIN AND BE MAINTAINED UNTIL PERMANENT EROSION CONTROL METHODS ARE IN PLACE AND OPERATIONAL. TEMPORARY EROSION CONTROL MEASURES SHALL BE REMOVED WITHIN 30 DAYS AFTER FINAL SITE STABILIZATION IS ACHIEVED OR AFTER THESE MEASURES ARE NO LONGER NEEDED.

7. STABILIZED CONSTRUCTION ENTRANCES SHALL BE INSTALLED AT THE BEGINNING OF CONSTRUCTION AND MAINTAINED FOR THE DURATION OF THE PROJECT. ADDITIONAL MEASURES MAY BE REQUIRED TO INSURE THAT ALL PAVED AREAS ARE KEPT CLEAN FOR THE DURATION OF THE PROJECT. IF CONSTRUCTION OCCURS DURING WET WEATHER; HAUL ROADS AND OTHER HIGH USE TRAFFIC AREAS SHALL BE PROTECTED BY AT LEAST 18 INCHES OF 3-INCH-MINUS CRUSHED ROCK UNDERLAIN BY A WOVEN GEOTEXTILE, SUCH AS AMOCO 2006, MIRAFI 600X, OR EQUIVALENT.

8. AT NO TIME SHALL MORE THAN ONE FOOT (1') OF SEDIMENT BE ALLOWED TO ACCUMULATE WITHIN A TRAPPED CATCH BASIN. ALL CATCH BASINS AND CONVEYANCE LINES SHALL BE CLEANED PRIOR TO PAVING. THE CLEANING OPERATION SHALL NOT FLUSH SEDIMENT-LADEN WATER INTO THE DOWNSTREAM SYSTEM. THE CONTRACTOR SHALL REMOVE ALL ACCUMULATED SEDIMENT FROM THE CATCH BASINS, DRYWELLS, AND STORM PIPES PRIOR TO FINAL ACCEPTANCE.

9. IN AREAS SUBJECT TO SURFACE AND AIR MOVEMENT OF DUST, WHERE ON-SITE OR OFF-SITE DAMAGE IS LIKELY TO OCCUR, ONE OR MORE OF THE FOLLOWING PREVENTIVE MEASURES SHALL BE TAKEN FOR DUST CONTROL:

   A. MINIMIZE THE PERIOD OF SOIL EXPOSURE THROUGH THE USE OF TEMPORARY GROUND COVER AND OTHER TEMPORARY STABILIZATION PRACTICES.

   B. THE SITE IS SPRINKLED WITH WATER UNTIL SURFACE IS WET. REPEAT AS NEEDED TO PREVENT THE CARRY OUT OF MUD ONTO STREET. REFER TO STABILIZED CONSTRUCTION ENTRANCE DETAILS.

   C. SPRAY EXPOSED SOILS WITH A DUST PALLIATIVE. NOTE, USED OIL IS PROHIBITED AS A PALLIATIVE.

10. PERMANENT INFILTRATION SYSTEMS SHALL BE ISOLATED AND PROTECTED FROM SEDIMENTATION BY SEDIMENT TRAPS, SACRIFICIAL SYSTEMS, DUPLICATE SYSTEMS, OR REDUNDANT SYSTEMS UNTIL PERMANENT EROSION CONTROL MEASURES ARE IN PLACE.

11. THE INSPECTOR SHALL BE NOTIFIED OF THE LOCATIONS AND CONSTRUCTION OF ANY EMPLOYEE PARKING AND EQUIPMENT STORAGE AREAS. EROSION CONTROL MEASURES SHALL BE INSTALLED IN THESE AREAS AS NECESSARY TO PREVENT SEDIMENT AND SEDIMENT LADEN RUNOFF FROM LEAVING THE SITE. IF NECESSARY, CONSTRUCTION ENTRANCES AND TIRE WASHES MAY NEED TO BE INSTALLED TO PREVENT SEDIMENT FROM BEING TRANSPORTED ONTO PUBLIC ROADS.

12. DRAINAGE STRUCTURE LABELING AND SIGNAGE SHALL BE PERFORMED BY THE COUNTY AS FOLLOWS:

    A. ALL CURB INLETS, DITCH INLETS, AND MANHOLES SHALL BE STENCILED: "PLEASE PROTECT – DRAINS TO DRINKING WATER"

    B. FOR FACILITIES DRAINING TO SURFACE WATERS THE STENCILLING SHALL READ: "PLEASE PROTECT – DRAINS TO (NAME OF WATER BODY)".

    C. SIGNS SHALL BE INSTALLED ALONG WATER QUALITY BIOFILTRATION SYSTEM THAT READ: "WATER QUALITY FILTER – PLEASE LEAVE VEGETATED"

    D. FENCED DETENTION AND RETENTION BASINS SHALL BE MARKED WITH A SIGN THAT READS: "[PUBLIC/PRIVATE] STORMWATER CONTROL FACILITY".

13. SEE DETAILS SHEET 20.

14. TOPOGRAPHY CONTOURS SHOWN ARE EXISTING AND ARE FOR REFERENCE ONLY. NEW CONTOURS REFLECTING CONSTRUCTION ARE NOT SHOWN.

SILT FENCES:

1. THE FILTER FABRIC SHALL BE PURCHASED IN A CONTINUOUS ROLL CUT TO THE LENGTH OF THE BARRIER TO AVOID USE OF JOINTS. WHEN JOINTS ARE NECESSARY, FILTER CLOTH SHALL BE SPLICED TOGETHER ONLY AT A SUPPORT POST, WITH A MINIMUM 6-INCH OVERLAP, AND BOTH ENDS SECURELY FASTENED TO THE POST.

2. THE FILTER FABRIC FENCE SHALL BE INSTALLED TO FOLLOW THE CONTOURS WHERE FEASIBLE. THE FENCE POSTS SHALL BE SPACED A MAXIMUM OF 6 FEET APART AND DRIVEN SECURELY INTO THE GROUND A MINIMUM OF 30 INCHES.

3. A TRENCH SHALL BE EXCAVATED, APPROXIMATELY 4 INCHES WIDE BY 4 INCHES DEEP, UP-SLOPE AND ADJACENT TO THE WOOD POST TO ALLOW THE FILTER FABRIC TO BE BURIED.

4. WHEN STANDARD STRENGTH FILTER FABRIC IS USED, A WIRE SUPPORT FENCE SHALL BE FASTENED SECURELY TO THE UP-SLOPE SIDE OF THE POSTS USING HEAVY-DUTY WIRE STAPLES AT LEAST 1 INCH LONG, WIRE RINGS OR WIRE FABRIC. THE WIRE SHALL EXTEND INTO THE TRENCH A MINIMUM OF 4 INCHES AND SHALL NOT EXTEND MORE THAN 36 INCHES ABOVE THE ORIGINAL GROUND SURFACE.

5. THE STANDARD STRENGTH FILTER FABRIC SHALL BE STAPLED OR WIRED TO THE FENCE, AND 20 INCHES OF THE FABRIC SHALL NOT EXTEND MORE THAN 36 INCHES ABOVE THE ORIGINAL GROUND SURFACE. FILTER FABRIC SHALL NOT BE STAPLED TO EXISTING TREES.

6. WHEN EXTRA STRENGTH FILTER FABRIC AND CLOSER POST SPACING ARE USED, THE WIRE MESH SUPPORT FENCE MAY BE ELIMINATED. IN SUCH A CASE, THE FILTER FABRIC IS STAPLED OR WIRED DIRECTLY TO THE POSTS WITH ALL OTHER PROVISIONS OF THE ABOVE STANDARD NOTE FOR STANDARD STRENGTH FILTER FABRIC APPLYING.

7. SILT FENCES SHALL BE REMOVED WHEN THEY HAVE SERVED THEIR USEFUL PURPOSE, BUT NOT BEFORE THE UPSLOPE AREA HAS BEEN PERMANENTLY STABILIZED.

8. SILT FENCES SHALL BE INSPECTED BY APPLICANT/CONTRACTOR IMMEDIATELY AFTER EACH RAINFALL AND AT LEAST DAILY DURING PROLONGED RAINFALL. ANY REQUIRED REPAIRS SHALL BE MADE IMMEDIATELY.

9. CONCENTRATED FLOWS ON THE SITE MUST BE CONVEYED THROUGH A CONSTRUCTED DRAINAGE SYSTEM TO A SEDIMENT TRAP OR POND.

10. SILT FENCES SHALL NOT BE CONSTRUCTED IN STREAMS OR USED IN V-SHAPED DITCHES.

11. IF CONCENTRATED FLOWS ARE EVIDENT UPHILL OF THE FENCE, THEY MUST BE INTERCEPTED AND CONVEYED TO A SEDIMENT TRAP OR POND.

12. IF THE FILTER FABRIC (GEOTEXTILE) HAS DETERIORATED, IT SHALL BE REPLACED.

FOR INFORMATIONAL PURPOSES ONLY

ALL PLAN DETAIL AND INFORMATION IS NOT SHOWN ON THIS 90% COMPLETED SET OF PLANS.

90% SUBMITTAL - JULY 2004

DESIGNED:	JLB
DRAWN:	JLB
CRP:	330222
HOR.	N/A
VERT.	N/A
DATE:	7/2004
DWG:	
SHEET	21 OF 99

CALL 48 HOURS BEFORE YOU DIG
1-800-553-4344
"It's the Law"
NORTHWEST UTILITIES NOTIFICATION CENTER

Harper Houf Peterson Righellis Inc.
ENGINEERS PLANNERS SURVEYORS
1104 MAIN STREET, SUITE 100, VANCOUVER, WA 98660
TEL 360.750.1131 www.hhpr.com FAX 360.750.1141

DESIGN & ENGINEERING DIVISION

NE 88TH STREET
EROSION CONTROL NOTES

proud past, promising future
CLARK COUNTY WASHINGTON

P:\Crk-12 (NE 88th)\CRK12-DWGS\ Crk12-EC.DWG

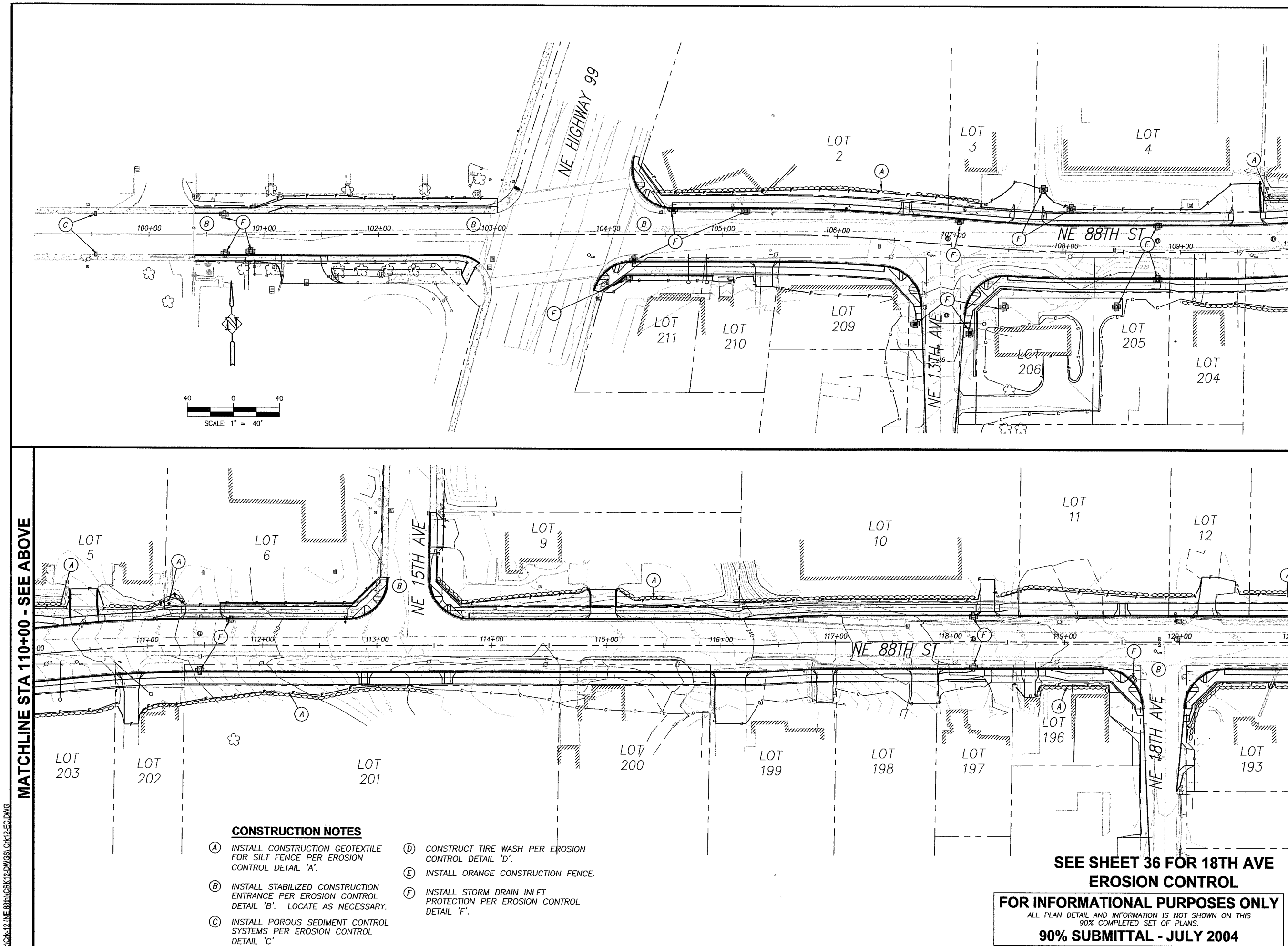

CONSTRUCTION NOTES

(A) INSTALL CONSTRUCTION GEOTEXTILE FOR SILT FENCE PER EROSION CONTROL DETAIL 'A'.

(B) INSTALL STABILIZED CONSTRUCTION ENTRANCE PER EROSION CONTROL DETAIL 'B'. LOCATE AS NECESSARY.

(C) INSTALL POROUS SEDIMENT CONTROL SYSTEMS PER EROSION CONTROL DETAIL 'C'

(D) CONSTRUCT TIRE WASH PER EROSION CONTROL DETAIL 'D'.

(E) INSTALL ORANGE CONSTRUCTION FENCE.

(F) INSTALL STORM DRAIN INLET PROTECTION PER EROSION CONTROL DETAIL 'F'.

SEE SHEET 36 FOR 18TH AVE EROSION CONTROL

FOR INFORMATIONAL PURPOSES ONLY

ALL PLAN DETAIL AND INFORMATION IS NOT SHOWN ON THIS 90% COMPLETED SET OF PLANS.

90% SUBMITTAL - JULY 2004

DESIGNED:	TSH
DRAWN:	NPR
CRP:	330222
HOR.	1" = 40'
VERT.	N/A
DATE:	7/2004
DWG:	
SHEET	22 OF 99

CALL 48 HOURS BEFORE YOU DIG 1-800-553-4344 "It's the Law" NORTHWEST UTILITIES NOTIFICATION CENTER

Harper Houf Peterson Righellis Inc.
ENGINEERS • PLANNERS • SURVEYORS
1104 MAIN STREET, SUITE 100, VANCOUVER, WA 98660
TEL 360.750.1131 www.hhpr.com FAX 360.750.1141

DESIGN & ENGINEERING DIVISION

NE 88TH STREET EROSION CONTROL PLAN

proud past, promising future

CLARK COUNTY WASHINGTON

P:\Clrk12 (NE 88th)\GRK12-DWGS\Grk12-EC.DWG

MATCHLINE STA 121+00 - SEE SHEET 22

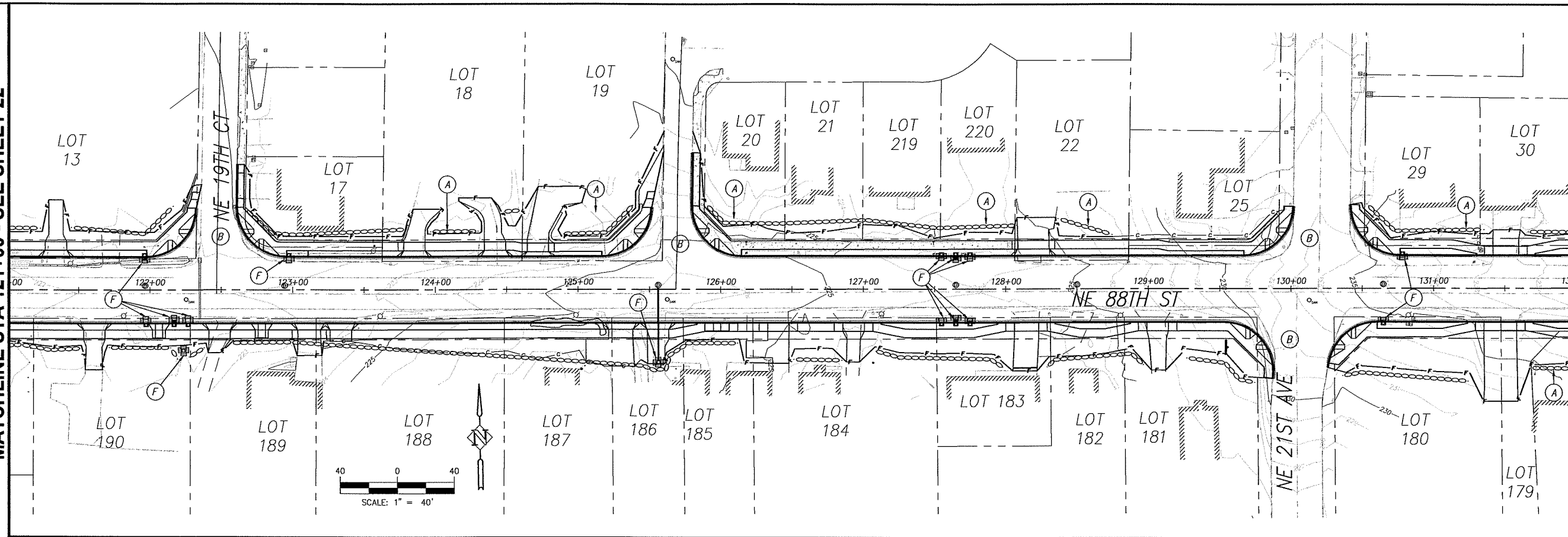

MATCHLINE STA 132+00 - SEE BELOW

MATCHLINE STA 132+00 - SEE ABOVE

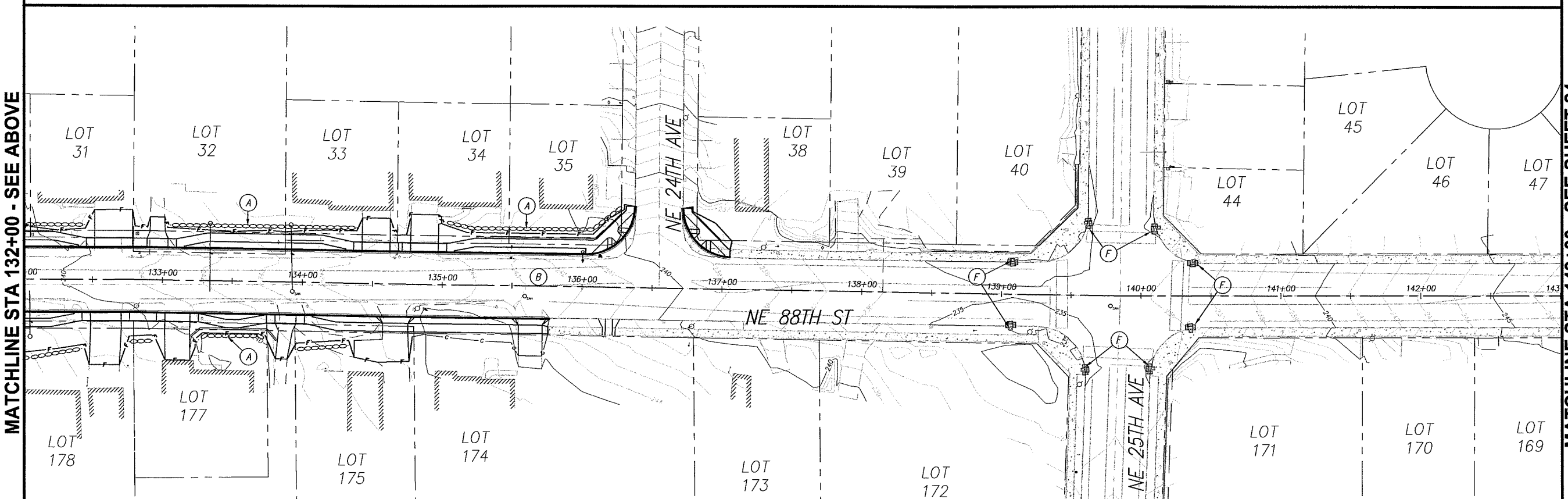

MATCHLINE STA 143+00 - SEE SHEET 24

CONSTRUCTION NOTES

(A) INSTALL CONSTRUCTION GEOTEXTILE FOR SILT FENCE PER EROSION CONTROL DETAIL 'A'.

(B) INSTALL STABILIZED CONSTRUCTION ENTRANCE PER EROSION CONTROL DETAIL 'B'. LOCATE AS NECESSARY.

(C) INSTALL POROUS SEDIMENT CONTROL SYSTEMS PER EROSION CONTROL DETAIL 'C'

(D) CONSTRUCT TIRE WASH PER EROSION CONTROL DETAIL 'D'.

(E) INSTALL ORANGE CONSTRUCTION FENCE.

(F) INSTALL STORM DRAIN INLET PROTECTION PER EROSION CONTROL DETAIL 'F'.

FOR INFORMATIONAL PURPOSES ONLY

ALL PLAN DETAIL AND INFORMATION IS NOT SHOWN ON THIS 90% COMPLETED SET OF PLANS.

90% SUBMITTAL - JULY 2004

DESIGNED:	TSH
DRAWN:	NPR
CRP:	330222
HOR.	1" =40'
VERT.	N/A
DATE:	7/2004
DWG:	
SHEET	23 OF 99

CALL 48 HOURS BEFORE YOU DIG 1-800-553-4344 "It's the Law" NORTHWEST UTILITIES NOTIFICATION CENTER

Harper Houf Peterson Righellis Inc.
ENGINEERS • PLANNERS • SURVEYORS
1104 MAIN STREET, Suite 100, VANCOUVER, WA 98660
TEL 360.750.1131 www.hhpr.com FAX 360.750.1141

DESIGN & ENGINEERING DIVISION

NE 88TH STREET EROSION CONTROL PLAN

proud past, promising future

CLARK COUNTY WASHINGTON

P:\Crk-12 (NE 88th)\CRK12-DW\GS\Crk12-EC.DWG

P:\Crk-12 (NE 88th)\CRK12-DWGS\ Crk12-EC.DWG

MATCHLINE STA 154+00 - SEE ABOVE

MATCHLINE STA 143+00 - SEE SHEET 23

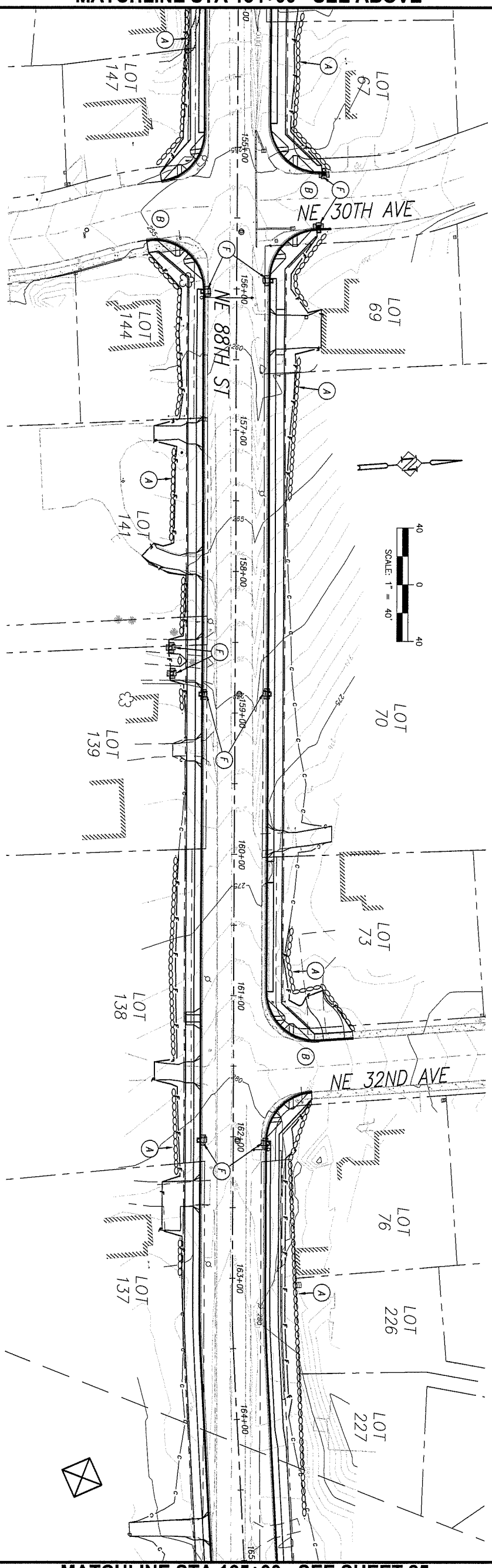

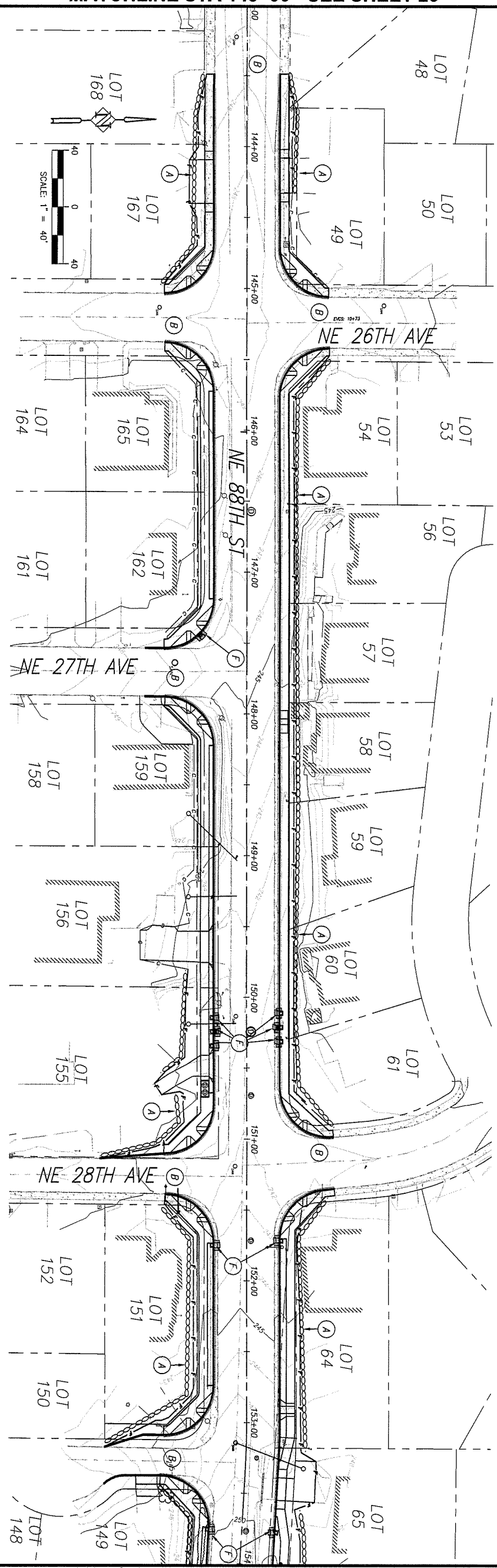

MATCHLINE STA 165+00 - SEE SHEET 25

MATCHLINE STA 154+00 - SEE BELOW

CONSTRUCTION NOTES

(A) INSTALL CONSTRUCTION GEOTEXTILE FOR SILT FENCE PER EROSION CONTROL DETAIL 'A'.

(B) INSTALL STABILIZED CONSTRUCTION ENTRANCE PER EROSION CONTROL DETAIL 'B'. LOCATE AS NECESSARY.

(C) INSTALL POROUS SEDIMENT CONTROL SYSTEMS PER EROSION CONTROL DETAIL 'C'

(D) CONSTRUCT TIRE WASH PER EROSION CONTROL DETAIL 'D'.

(E) INSTALL ORANGE CONSTRUCTION FENCE.

(F) INSTALL STORM DRAIN INLET PROTECTION PER EROSION CONTROL DETAIL 'F'.

FOR INFORMATIONAL PURPOSES ONLY

ALL PLAN DETAIL AND INFORMATION IS NOT SHOWN ON THIS 90% COMPLETED SET OF PLANS.

90% SUBMITTAL - JULY 2004

proud past, promising future

CLARK COUNTY WASHINGTON

DESIGN & ENGINEERING DIVISION

NE 88TH STREET EROSION CONTROL PLAN

HHPR Harper Houf Peterson Righellis Inc.

ENGINEERS • PLANNERS • SURVEYORS

1104 MAIN STREET, SUITE 100, VANCOUVER, WA 98660

TEL 360.750.1131 www.hhpr.com FAX 360.750.1141

CALL 48 HOURS BEFORE YOU DIG 1-800-553-4344 "It's the Law"

NORTHWEST UTILITIES NOTIFICATION CENTER

DESIGNED:	TSH
DRAWN:	NPR
CRP:	330222
HOR.	1" =40'
VERT.	N/A
DATE:	7/2004
DWG:	
SHEET	24 OF 99

SEE SHEET 39 FOR EROSION CONTROL

MATCHLINE STA 165+00 - SEE SHEET 25

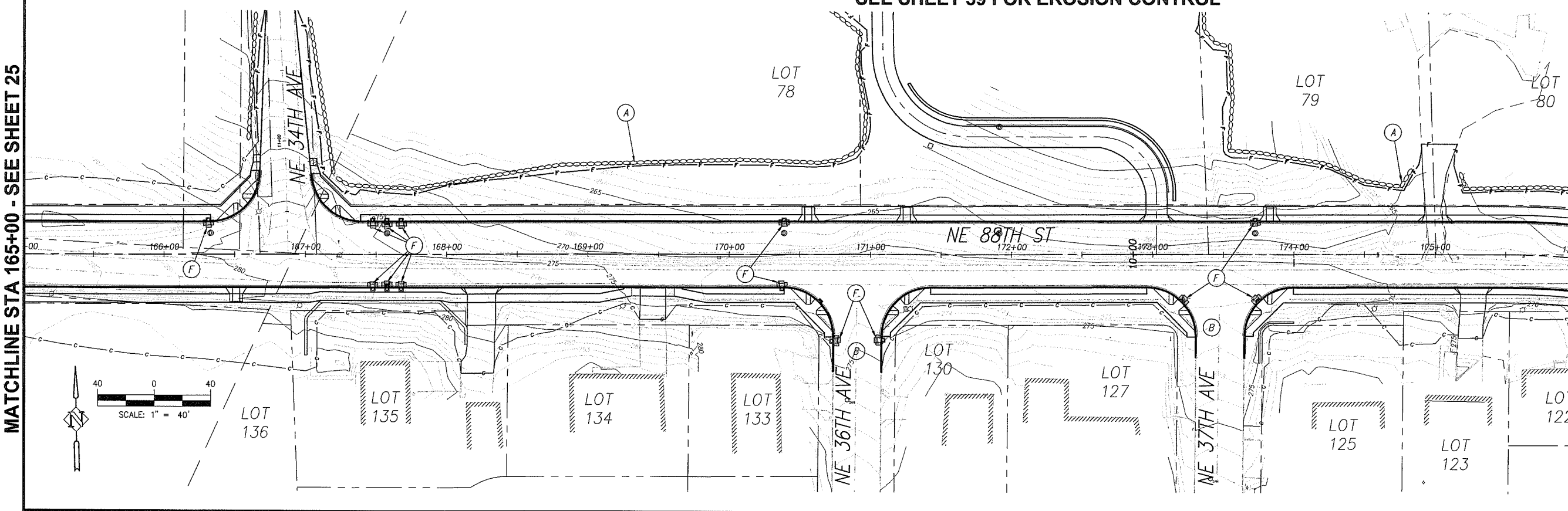

MATCHLINE STA 176+00 - SEE BELOW

MATCHLINE STA 176+00 - SEE ABOVE

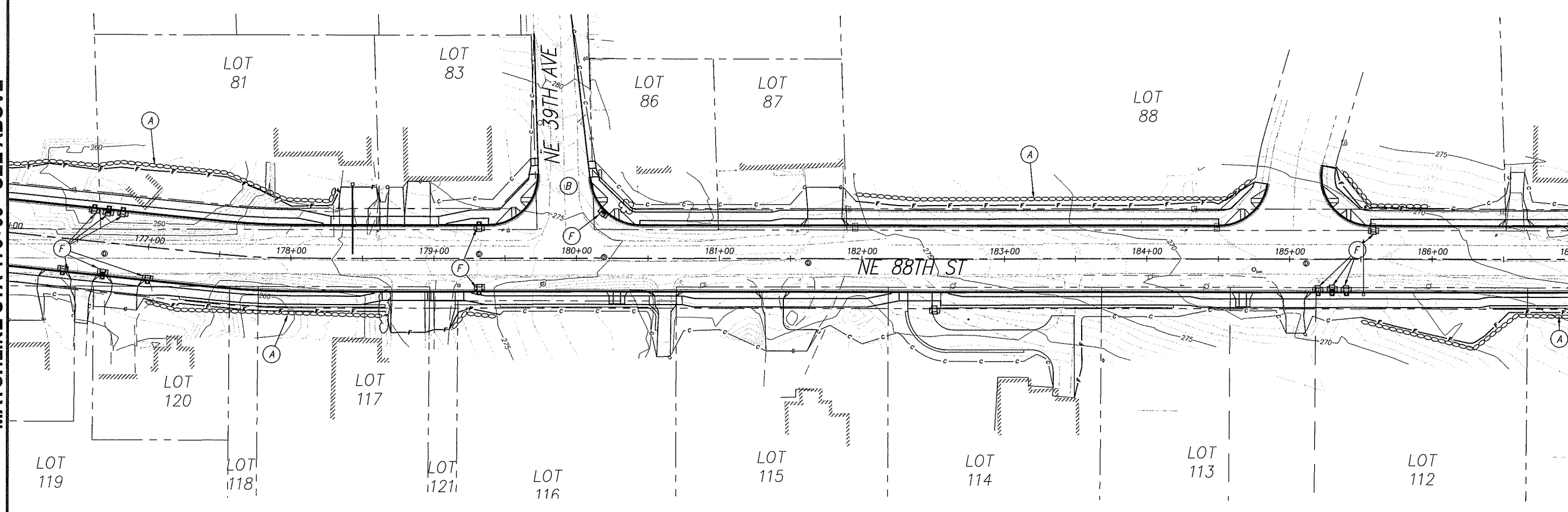

MATCHLINE STA 187+00 - SEE SHEET 27

CONSTRUCTION NOTES

- (A) INSTALL CONSTRUCTION GEOTEXTILE FOR SILT FENCE PER EROSION CONTROL DETAIL 'A'.
- (B) INSTALL STABILIZED CONSTRUCTION ENTRANCE PER EROSION CONTROL DETAIL 'B'. LOCATE AS NECESSARY.
- (C) INSTALL POROUS SEDIMENT CONTROL SYSTEMS PER EROSION CONTROL DETAIL 'C'
- (D) CONSTRUCT TIRE WASH PER EROSION CONTROL DETAIL 'D'.
- (E) INSTALL ORANGE CONSTRUCTION FENCE.
- (F) INSTALL STORM DRAIN INLET PROTECTION PER EROSION CONTROL DETAIL 'F'.

FOR INFORMATIONAL PURPOSES ONLY

ALL PLAN DETAIL AND INFORMATION IS NOT SHOWN ON THIS 90% COMPLETED SET OF PLANS.

90% SUBMITTAL - JULY 2004

DESIGNED:	TSH
DRAWN:	NPR
CRP:	330222
HOR.	1" =40'
VERT.	N/A
DATE:	7/2004
DWG:	
SHEET	25 OF 99

CALL 48 HOURS BEFORE YOU DIG 1-800-553-4344 "It's the Law" NORTHWEST UTILITIES NOTIFICATION CENTER

Harper Houf Peterson Righellis Inc.
ENGINEERS · PLANNERS · SURVEYORS
1104 MAIN STREET, SUITE 100, VANCOUVER, WA 98660
TEL 360.750.1131 www.hhpr.com FAX 360.750.1141

DESIGN & ENGINEERING DIVISION

NE 88TH STREET EROSION CONTROL PLAN

proud past, promising future

CLARK COUNTY WASHINGTON

P:\Clk-12 (NE 88th)\CRK12-DWGS\ Clk12-EC.DWG

MATCHLINE STA 187+00 - SEE SHEET 26

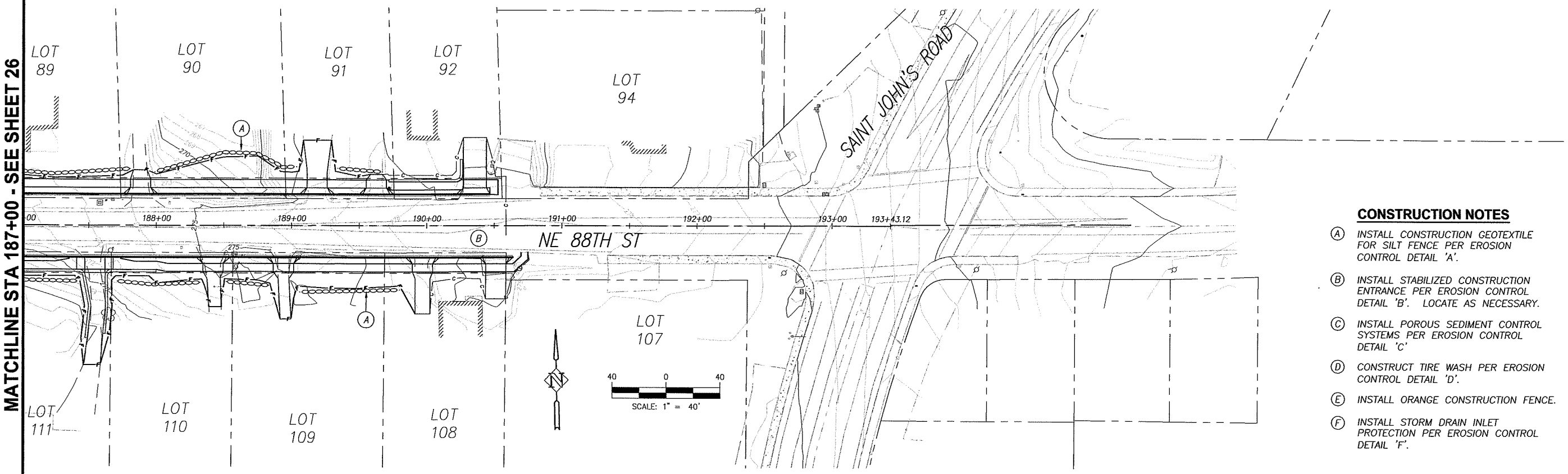

CONSTRUCTION NOTES

(A) INSTALL CONSTRUCTION GEOTEXTILE FOR SILT FENCE PER EROSION CONTROL DETAIL 'A'.

(B) INSTALL STABILIZED CONSTRUCTION ENTRANCE PER EROSION CONTROL DETAIL 'B'. LOCATE AS NECESSARY.

(C) INSTALL POROUS SEDIMENT CONTROL SYSTEMS PER EROSION CONTROL DETAIL 'C'

(D) CONSTRUCT TIRE WASH PER EROSION CONTROL DETAIL 'D'.

(E) INSTALL ORANGE CONSTRUCTION FENCE.

(F) INSTALL STORM DRAIN INLET PROTECTION PER EROSION CONTROL DETAIL 'F'.

FOR INFORMATIONAL PURPOSES ONLY

ALL PLAN DETAIL AND INFORMATION IS NOT SHOWN ON THIS 90% COMPLETED SET OF PLANS.

90% SUBMITTAL - JULY 2004

DESIGNED:	TSH
DRAWN:	NPR
CRP:	330222
HOR.	1" =40'
VERT.	N/A
DATE:	7/2004
DWG:	
SHEET	26 OF 99

CALL 48 HOURS BEFORE YOU DIG 1-800-553-4344 "It's the Law" NORTHWEST UTILITIES NOTIFICATION CENTER

Harper Houf Peterson Righellis Inc.
ENGINEERS • PLANNERS • SURVEYORS
1104 MAIN STREET, SUITE 100, VANCOUVER, WA 98660
TEL: 360.750.1131 www.hhpr.com FAX 360.750.1141

DESIGN & ENGINEERING DIVISION

NE 88TH STREET
EROSION CONTROL PLAN

proud past, promising future

CLARK COUNTY WASHINGTON

P:\Ck-12 NE 88th\CRK12-DWGS\ Crk12-EC.DWG

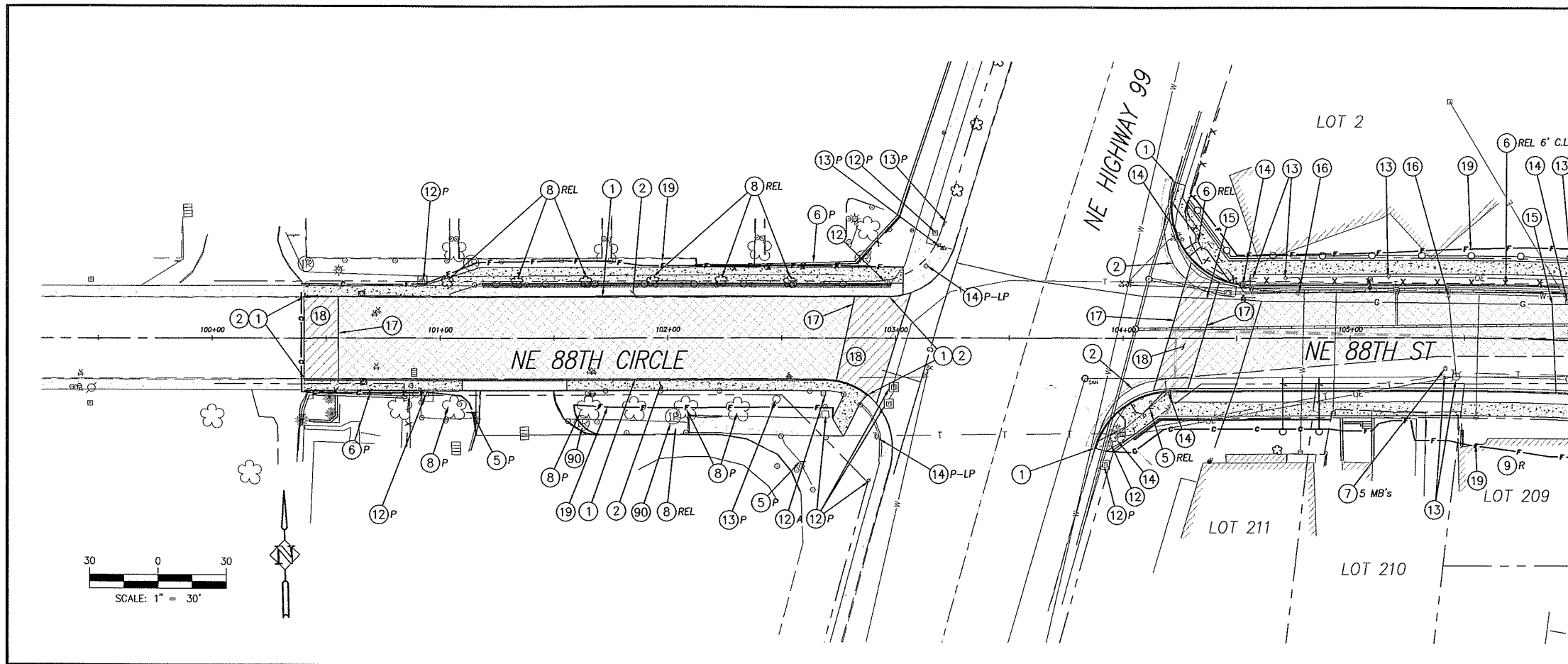

MATCHLINE STA. 106+00 - SEE BELOW

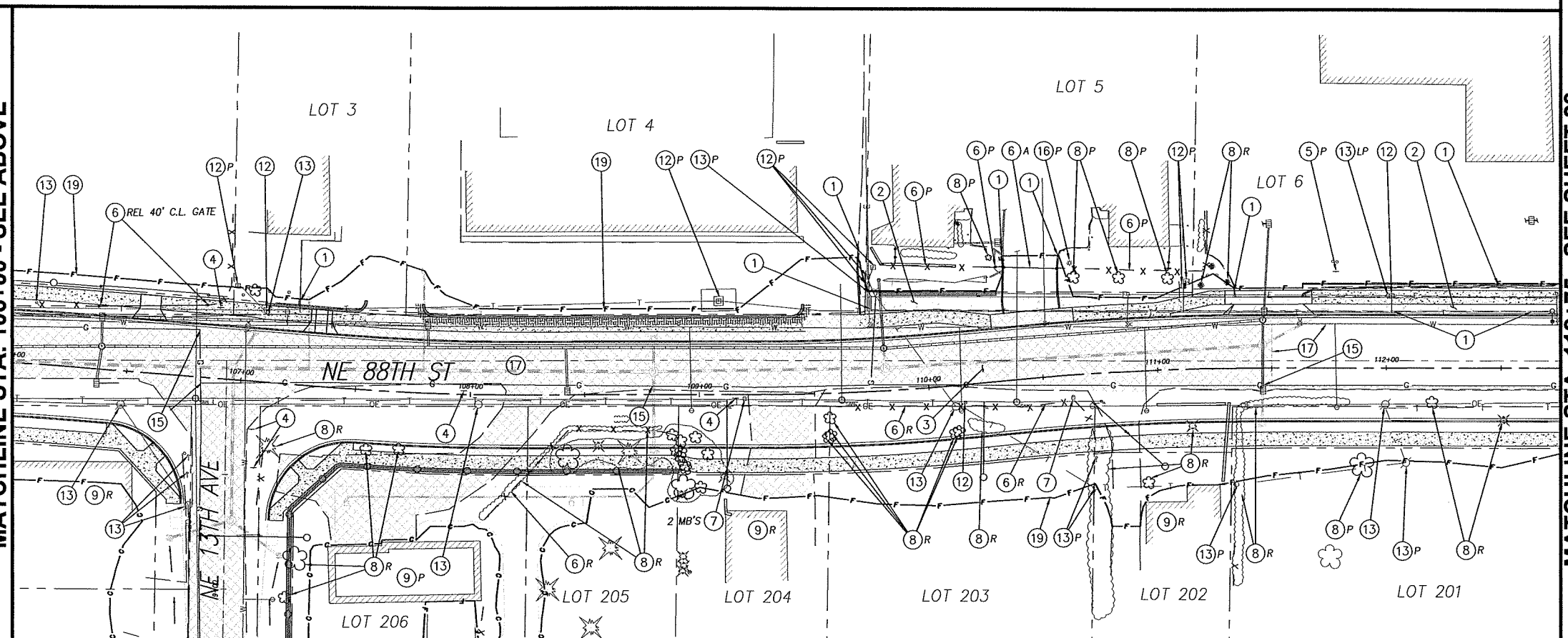

MATCHLINE STA. 112+75 - SEE SHEET 28

MATCHLINE STA. 106+00 - SEE ABOVE

SEE SHEET 82 FOR 13TH AVE SITE PREP AND DEMOLITION

CONSTRUCTION NOTES:

1. REMOVE EXISTING CURB. SAWCUT AT ALL CONNECTIONS.
2. REMOVE EXISTING SIDEWALK AND/OR RAMP. SAWCUT AT ALL CONNECTIONS.
4. EXISTING TRAFFIC/STREET SIGN TO BE RELOCATED BY OTHERS UNLESS NOTED TO BE PROTECTED (P). COORDINATE WITH FIELD INSPECTOR.
5. RELOCATE EXISTING PRIVATE SIGN OUTSIDE ROW AS DIRECTED UNLESS NOTED TO BE PROTECTED (P). COORDINATE WITH PROPERTY OWNER.
6. RELOCATE (REL) IN KIND, REMOVE (R), ADJUST (A), OR PROTECT (P) EXISTING FENCE AND GATES. COORDINATE REMOVALS AND RELOCATIONS WITH PROPERTY OWNER.
7. RELOCATE EXISTING MAILBOX PER WSDOT/APWA STANDARD PLAN H-12 UNLESS NOTED TO BE (P) PROTECTED.
8. REMOVE (R), PROTECT (P), OR TRIM (T) EXISTING SHRUB OR TREE AS SHOWN ON THE PLANS OR AS DIRECTED BY FIELD INSPECTOR.
9. EXISTING STRUCTURE TO BE (R) REMOVED OR (P) PROTECTED.
10. RECONSTRUCT EXISTING RETAINING WALL UNLESS NOTED TO (P) PROTECT OR (R) REMOVE.
11. CAUTION!! WATER, SANITARY SEWER, GAS OR UTILITY CROSSINGS. POTHOLE OR VERIFY ALL CROSSINGS PRIOR TO CONSTRUCTION TO ENSURE CLEARANCE OF UTILITIES. COORDINATE WITH APPROPRIATE UTILITY AGENCY.
12. EXISTING UTILITY PEDESTAL/VAULT TO BE REMOVED OR RELOCATED BY OTHERS, UNLESS OTHERWISE NOTED WITH (P) PROTECT OR (A) ADJUST. COORDINATE WORK WITH APPROPRIATE UTILITY AGENCY.
13. EXISTING UTILITY POLE, LIGHT POLE, AND/OR GUY WIRE TO BE REMOVED OR RELOCATED BY OTHERS, UNLESS OTHERWISE NOTED WITH (P) PROTECT OR (A) ADJUST. COORDINATE WORK WITH APPROPRIATE UTILITY AGENCY. EXISTING LIGHT POLES ARE NOTED WITH (LP).
14. TRAFFIC SIGNAL POLE OR JUNCTION BOX TO BE RELOCATED UNLESS OTHERWISE NOTED WITH (P) PROTECT OR (A) ADJUST. EXISTING LIGHT POLES ARE NOTED WITH (LP).
15. CAUTION!! HIGH PRESSURE GAS LINE. CONTRACTOR TO CONTACT LINDA CHRISTY OR FAY THOMAS AT (503) 226-4211 EXT. 4313, PRIOR TO ANY EXCAVATION AROUND LINES.
16. EXISTING PRIVATE LIGHT POLE TO BE RELOCATED.
17. SAWCUT AND REMOVE EXISTING PAVEMENT AT ALL CONNECTIONS AND TRANSITIONS A MINIMUM OF 4' FROM FACE OF NEW CURB, 1' FROM EDGE OF EXISTING PAVEMENT, OR AS DIRECTED BY FIELD INSPECTOR.
18. PLANE EXISTING A.C. PAVEMENT AND TRANSITION OVERLAY TO EXISTING CURB OR PAVEMENT PER DETAILS ON SHEET 12.
19. LIMITS OF GRADING
90. RELOCATE (R), PROTECT (P), OR ADJUST (A) EXISTING IRRIGATION AS REQUIRED AND DIRECTED. ALL DISTURBED IRRIGATION SHALL BE REPAIRED AS REQUIRED.
99. PLANE 2" EXISTING A.C. PAVEMENT AND REPLACE WITH 2" CLASS 'A' ASPHALT PAVEMENT.

GENERAL NOTES:
FOR WATER, STORM, AND SANITARY SEWER ADJUSTMENTS SEE SHEETS 57 THRU 78

EXISTING FENCE TYPES INCLUDE CHAIN LINK (C.L.), BARBED WIRE (B.W.), WIRE MESH (W.M.), AND WOOD FENCE (W.F.).

FOR INFORMATIONAL PURPOSES ONLY
ALL PLAN DETAIL AND INFORMATION IS NOT SHOWN ON THIS 90% COMPLETED SET OF PLANS.
90% SUBMITTAL - JULY 2004

DESIGNED:	TSH
DRAWN:	NPR
CRP:	330222
HOR.	1" = 30'
VERT.	N/A
DATE:	7/2004
DWG:	
SHEET	27 OF 99

CALL 48 HOURS BEFORE YOU DIG
1-800-553-4344
"It's the Law"
NORTHWEST UTILITIES NOTIFICATION CENTER

Harper Houf Peterson Righellis Inc.
ENGINEERS · PLANNERS · SURVEYORS
1104 MAIN STREET, SUITE 100, VANCOUVER, WA 98660
TEL 360.750.1131 www.hhpr.com FAX 360.750.1141

DESIGN & ENGINEERING DIVISION

NE 88TH STREET
SITE PREP AND DEMOLITION
STA 100+00 TO STA 112+75

proud past, promising future
CLARK COUNTY WASHINGTON

P:\Clrk-12 (NE 88th)\CRK12-DW\GSI\C4c12-SP-WEST.DWG

MATCHLINE STA. 112+75 - SEE SHEET 27

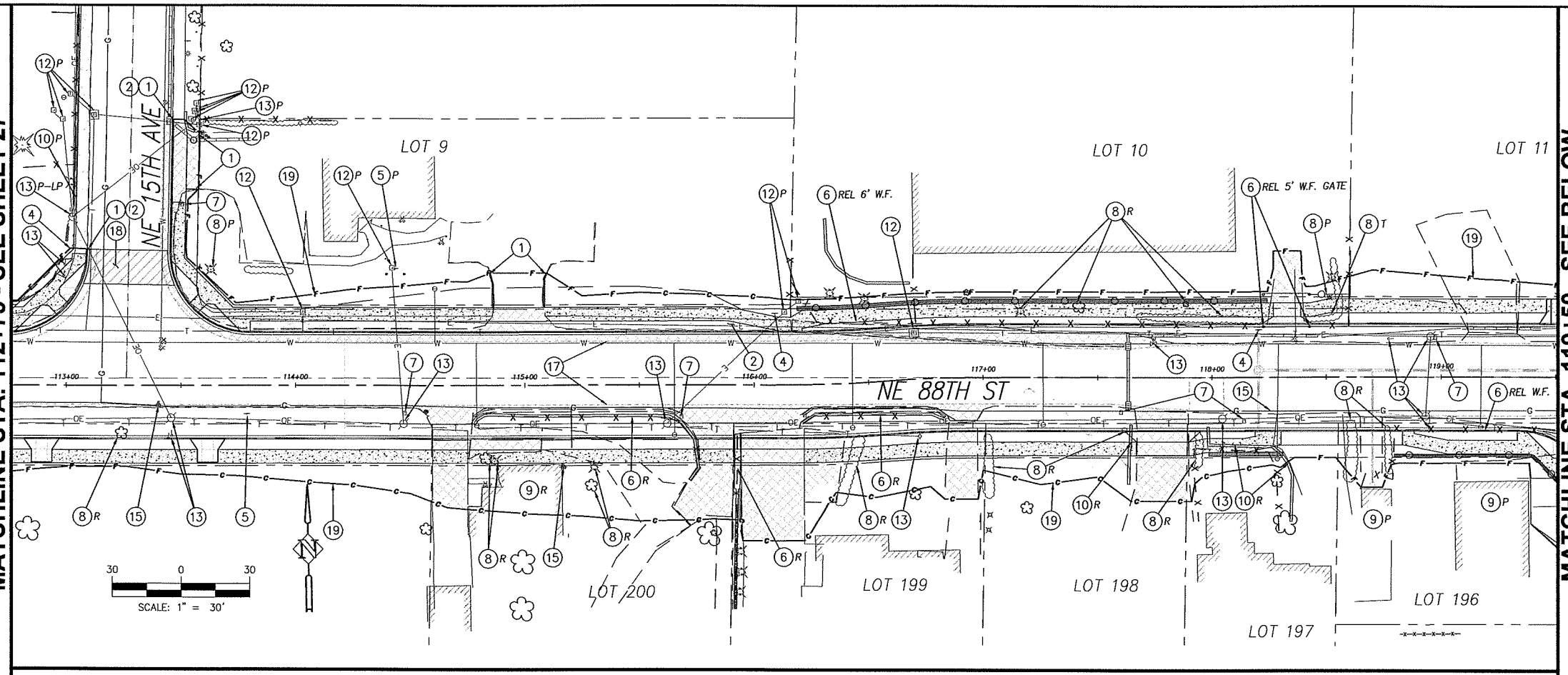

MATCHLINE STA. 119+50 - SEE ABOVE

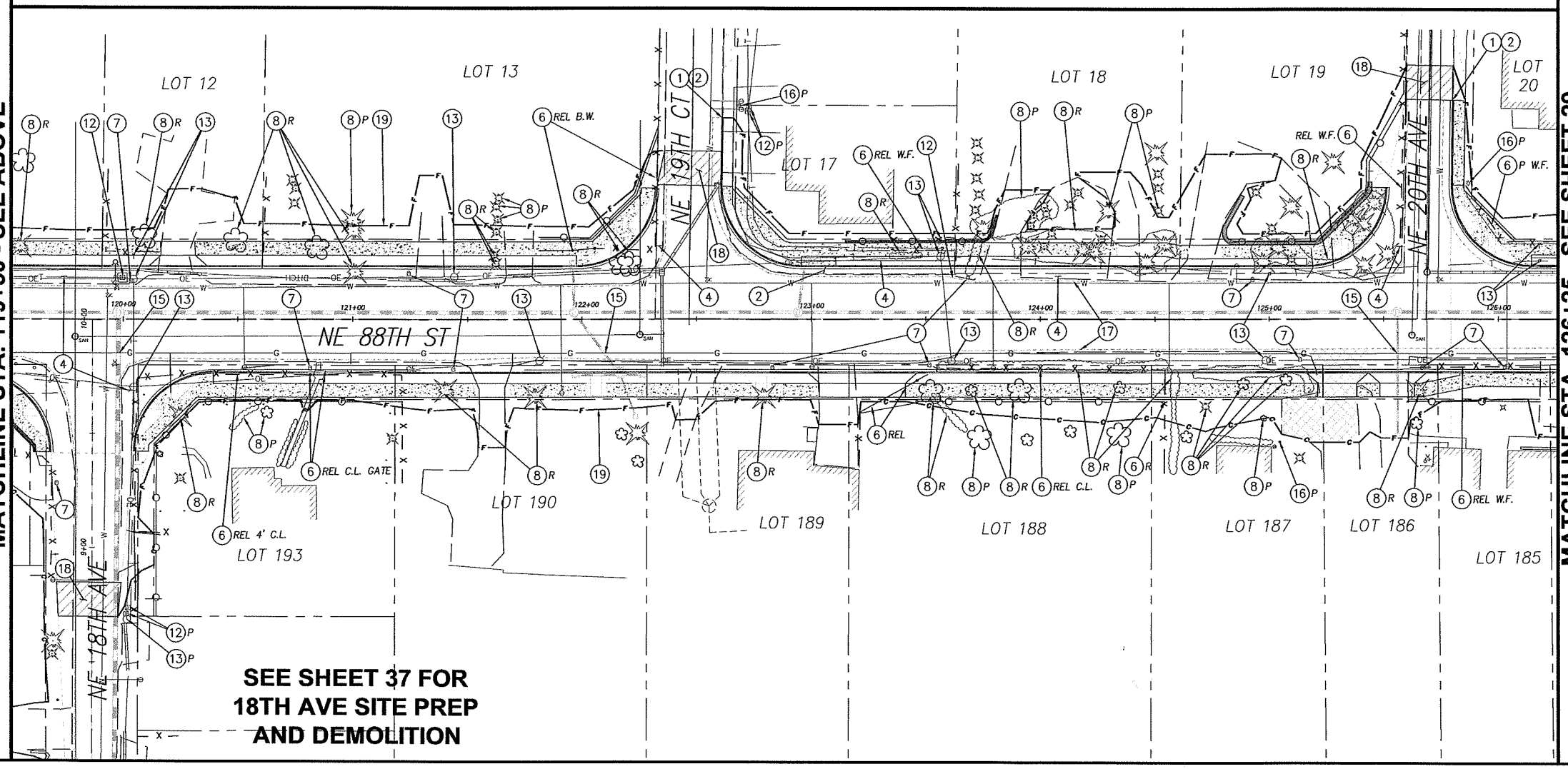

SEE SHEET 37 FOR 18TH AVE SITE PREP AND DEMOLITION

MATCHLINE STA. 119+50 - SEE BELOW

MATCHLINE STA. 126+25 - SEE SHEET 29

CONSTRUCTION NOTES:

1. REMOVE EXISTING CURB. SAWCUT AT ALL CONNECTIONS.
2. REMOVE EXISTING SIDEWALK AND/OR RAMP. SAWCUT AT ALL CONNECTIONS.
4. EXISTING TRAFFIC/STREET SIGN TO BE RELOCATED BY OTHERS UNLESS NOTED TO BE PROTECTED (P). COORDINATE WITH FIELD INSPECTOR.
5. RELOCATE EXISTING PRIVATE SIGN OUTSIDE ROW AS DIRECTED UNLESS NOTED TO BE PROTECTED (P). COORDINATE WITH PROPERTY OWNER.
6. RELOCATE (REL) IN KIND, REMOVE (R), ADJUST (A), OR PROTECT (P) EXISTING FENCE AND GATES. COORDINATE REMOVALS AND RELOCATIONS WITH PROPERTY OWNER.
7. RELOCATE EXISTING MAILBOX PER WSDOT/APWA STANDARD PLAN H-12 UNLESS NOTED TO BE (P) PROTECTED.
8. REMOVE (R), PROTECT (P), OR TRIM (T) EXISTING SHRUB OR TREE AS SHOWN ON THE PLANS OR AS DIRECTED BY FIELD INSPECTOR.
9. EXISTING STRUCTURE TO BE (R) REMOVED OR (P) PROTECTED.
10. RECONSTRUCT EXISTING RETAINING WALL UNLESS NOTED TO (P) PROTECT OR (R) REMOVE.
11. CAUTION!! WATER, SANITARY SEWER, GAS OR UTILITY CROSSINGS. POTHOLE OR VERIFY ALL CROSSINGS PRIOR TO CONSTRUCTION TO ENSURE CLEARANCE OF UTILITIES. COORDINATE WITH APPROPRIATE UTILITY AGENCY.
12. EXISTING UTILITY PEDESTAL/VAULT TO BE REMOVED OR RELOCATED BY OTHERS, UNLESS OTHERWISE NOTED WITH (P) PROTECT OR (A) ADJUST. COORDINATE WORK WITH APPROPRIATE UTILITY AGENCY.
13. EXISTING UTILITY POLE, LIGHT POLE, AND/OR GUY WIRE TO BE REMOVED OR RELOCATED BY OTHERS, UNLESS OTHERWISE NOTED WITH (P) PROTECT OR (A) ADJUST. COORDINATE WORK WITH APPROPRIATE UTILITY AGENCY. EXISTING LIGHT POLES ARE NOTED WITH (LP).
14. TRAFFIC SIGNAL POLE OR JUNCTION BOX TO BE RELOCATED UNLESS OTHERWISE NOTED WITH (P) PROTECT OR (A) ADJUST. EXISTING LIGHT POLES ARE NOTED WITH (LP).
15. CAUTION!! HIGH PRESSURE GAS LINE. CONTRACTOR TO CONTACT LINDA CHRISTY OR FAY THOMAS AT (503) 226-4211 EXT. 4313, PRIOR TO ANY EXCAVATION AROUND LINES.
16. EXISTING PRIVATE LIGHT POLE TO BE RELOCATED.
17. SAWCUT AND REMOVE EXISTING PAVEMENT AT ALL CONNECTIONS AND TRANSITIONS A MINIMUM OF 4' FROM FACE OF NEW CURB, 1' FROM EDGE OF EXISTING PAVEMENT, OR AS DIRECTED BY FIELD INSPECTOR.
18. PLANE EXISTING A.C. PAVEMENT AND TRANSITION OVERLAY TO EXISTING CURB OR PAVEMENT PER DETAILS ON SHEET 12.
19. LIMITS OF GRADING
90. RELOCATE (R), PROTECT (P), OR ADJUST (A) EXISTING IRRIGATION AS REQUIRED AND DIRECTED. ALL DISTURBED IRRIGATION SHALL BE REPAIRED AS REQUIRED.
99. PLANE 2" EXISTING A.C. PAVEMENT AND REPLACE WITH 2" CLASS 'A' ASPHALT PAVEMENT.

GENERAL NOTES:
FOR WATER, STORM, AND SANITARY SEWER ADJUSTMENTS SEE SHEETS 57 THRU 78

EXISTING FENCE TYPES INCLUDE CHAIN LINK (C.L.), BARBED WIRE (B.W.), WIRE MESH (W.M.), AND WOOD FENCE (W.F.).

FOR INFORMATIONAL PURPOSES ONLY
ALL PLAN DETAIL AND INFORMATION IS NOT SHOWN ON THIS 90% COMPLETED SET OF PLANS.
90% SUBMITTAL - JULY 2004

DESIGNED:	TSH
DRAWN:	NPR
CRP:	330222
HOR.	1" =30'
VERT.	N/A
DATE:	7/2004
DWG:	
SHEET	28 OF 99

CALL 48 HOURS BEFORE YOU DIG 1-800-553-4344 "It's the Law" NORTHWEST UTILITIES NOTIFICATION CENTER

Harper Houf Peterson Righellis Inc.
ENGINEERS • PLANNERS • SURVEYORS
1104 MAIN STREET, SUITE 100, VANCOUVER, WA 98660
TEL 360.750.1131 www.hhpr.com FAX 360.750.1141

DESIGN & ENGINEERING DIVISION

NE 88TH STREET
SITE PREP AND DEMOLITION
STA 112+75 TO STA 126+25

proud past, promising future
CLARK COUNTY WASHINGTON

P:\Crk-12 NE 88th\CRK12-DWGS\ Crk12-SP-WEST.DWG

MATCHLINE STA. 126+25 - SEE SHEET 28

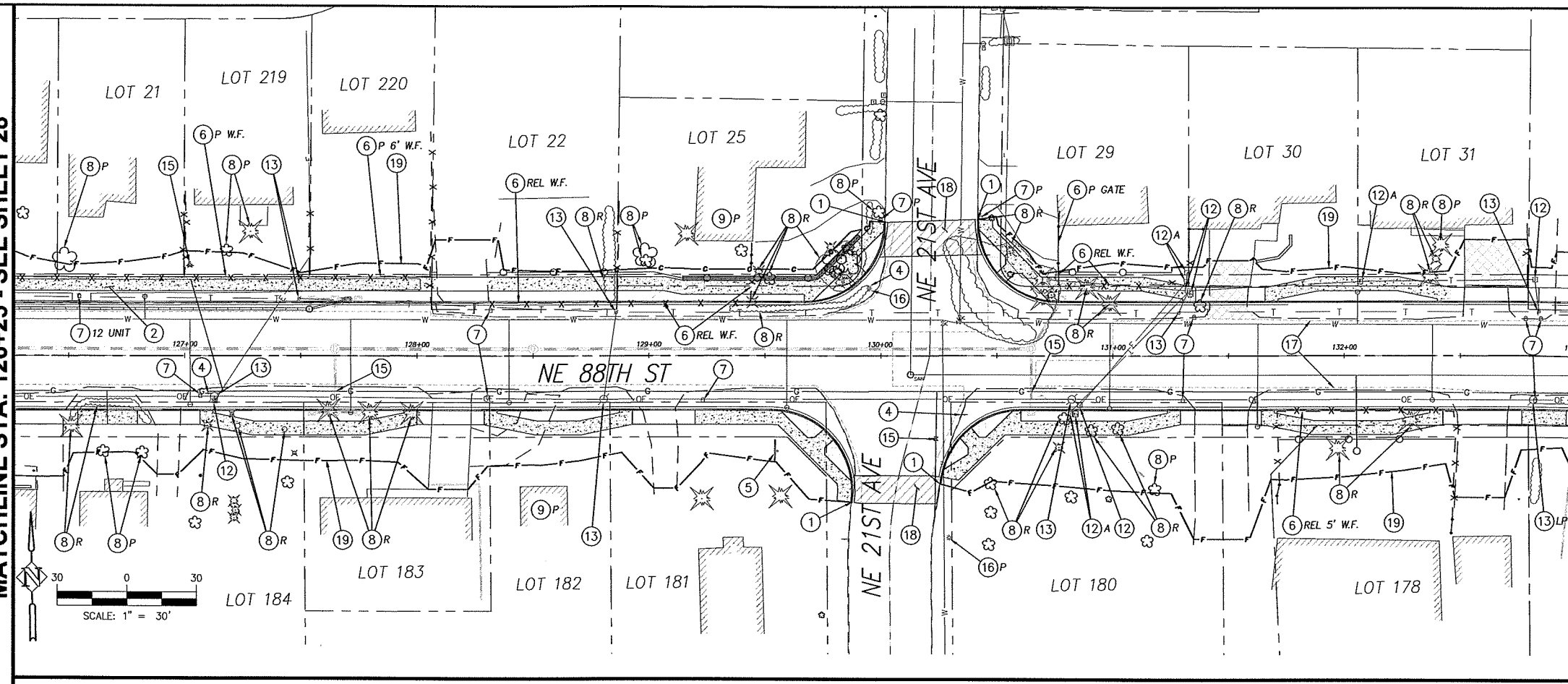

MATCHLINE STA. 133+00 - SEE ABOVE

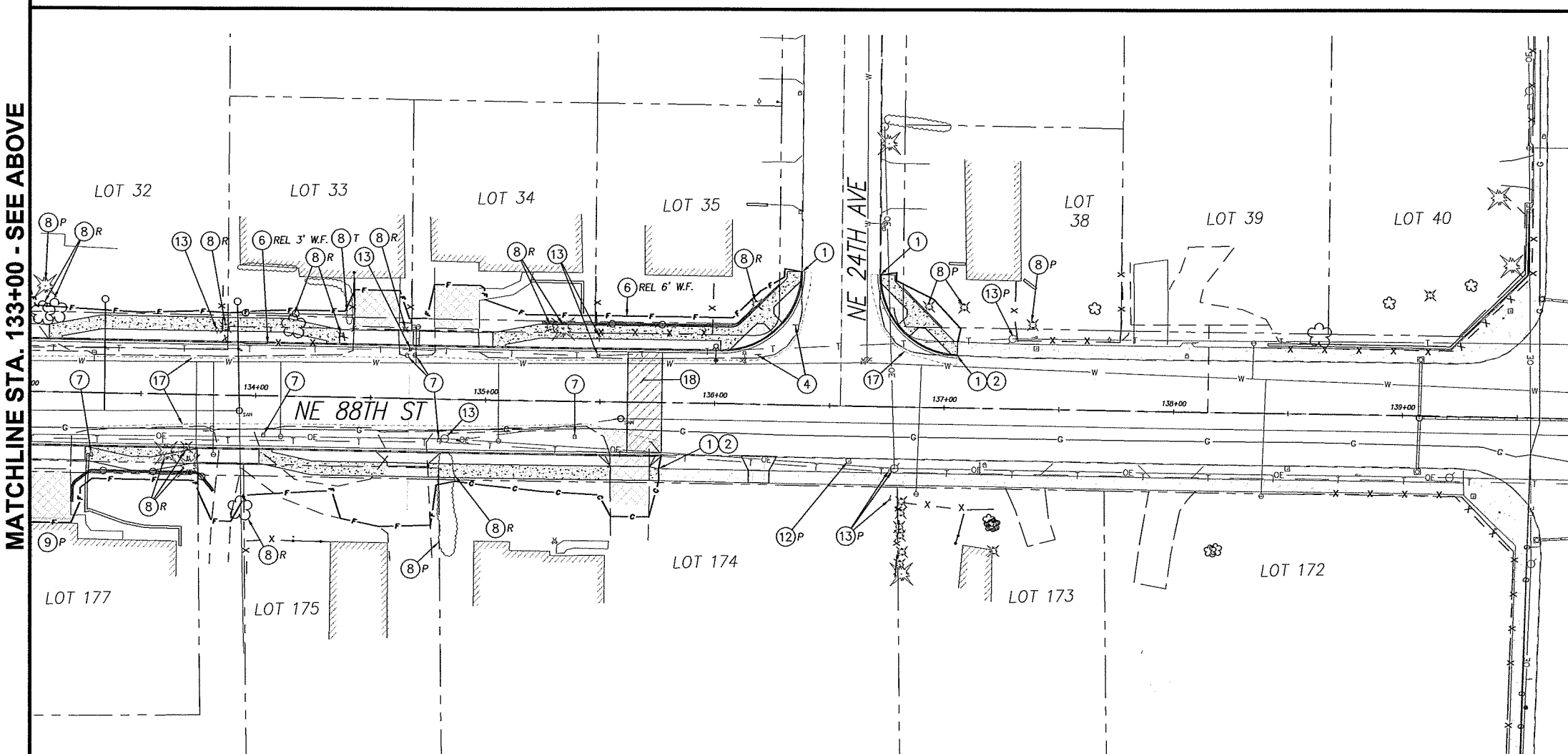

MATCHLINE STA. 133+00 - SEE BELOW

MATCHLINE STA. 133+00 - SEE SHEET 30

CONSTRUCTION NOTES:

1. REMOVE EXISTING CURB. SAWCUT AT ALL CONNECTIONS.
2. REMOVE EXISTING SIDEWALK AND/OR RAMP. SAWCUT AT ALL CONNECTIONS.
4. EXISTING TRAFFIC/STREET SIGN TO BE RELOCATED BY OTHERS UNLESS NOTED TO BE PROTECTED (P). COORDINATE WITH FIELD INSPECTOR.
5. RELOCATE EXISTING PRIVATE SIGN OUTSIDE ROW AS DIRECTED UNLESS NOTED TO BE PROTECTED (P). COORDINATE WITH PROPERTY OWNER.
6. RELOCATE (REL) IN KIND, REMOVE (R), ADJUST (A), OR PROTECT (P) EXISTING FENCE AND GATES. COORDINATE REMOVALS AND RELOCATIONS WITH PROPERTY OWNER.
7. RELOCATE EXISTING MAILBOX PER WSDOT/APWA STANDARD PLAN H-12 UNLESS NOTED TO BE (P) PROTECTED.
8. REMOVE (R), PROTECT (P), OR TRIM (T) EXISTING SHRUB OR TREE AS SHOWN ON THE PLANS OR AS DIRECTED BY FIELD INSPECTOR.
9. EXISTING STRUCTURE TO BE (R) REMOVED OR (P) PROTECTED.
10. RECONSTRUCT EXISTING RETAINING WALL UNLESS NOTED TO (P) PROTECT OR (R) REMOVE.
11. CAUTION!! WATER, SANITARY SEWER, GAS OR UTILITY CROSSINGS. POTHOLE OR VERIFY ALL CROSSINGS PRIOR TO CONSTRUCTION TO ENSURE CLEARANCE OF UTILITIES. COORDINATE WITH APPROPRIATE UTILITY AGENCY.
12. EXISTING UTILITY PEDESTAL/VAULT TO BE REMOVED OR RELOCATED BY OTHERS, UNLESS OTHERWISE NOTED WITH (P) PROTECT OR (A) ADJUST. COORDINATE WORK WITH APPROPRIATE UTILITY AGENCY.
13. EXISTING UTILITY POLE, LIGHT POLE, AND/OR GUY WIRE TO BE REMOVED OR RELOCATED BY OTHERS, UNLESS OTHERWISE NOTED WITH (P) PROTECT OR (A) ADJUST. COORDINATE WORK WITH APPROPRIATE UTILITY AGENCY. EXISTING LIGHT POLES ARE NOTED WITH (LP).
14. TRAFFIC SIGNAL POLE OR JUNCTION BOX TO BE RELOCATED UNLESS OTHERWISE NOTED WITH (P) PROTECT OR (A) ADJUST. EXISTING LIGHT POLES ARE NOTED WITH (LP).
15. CAUTION!! HIGH PRESSURE GAS LINE. CONTRACTOR TO CONTACT LINDA CHRISTY OR FAY THOMAS AT (503) 226-4211 EXT. 4313, PRIOR TO ANY EXCAVATION AROUND LINES.
16. EXISTING PRIVATE LIGHT POLE TO BE RELOCATED.
17. SAWCUT AND REMOVE EXISTING PAVEMENT AT ALL CONNECTIONS AND TRANSITIONS A MINIMUM OF 4' FROM FACE OF NEW CURB, 1' FROM EDGE OF EXISTING PAVEMENT, OR AS DIRECTED BY FIELD INSPECTOR.
18. PLANE EXISTING A.C. PAVEMENT AND TRANSITION OVERLAY TO EXISTING CURB OR PAVEMENT PER DETAILS ON SHEET 12.
19. LIMITS OF GRADING
90. RELOCATE (R), PROTECT (P), OR ADJUST (A) EXISTING IRRIGATION AS REQUIRED AND DIRECTED. ALL DISTURBED IRRIGATION SHALL BE REPAIRED AS REQUIRED.
99. PLANE 2" EXISTING A.C. PAVEMENT AND REPLACE WITH 2" CLASS 'A' ASPHALT PAVEMENT.

GENERAL NOTES:
FOR WATER, STORM, AND SANITARY SEWER ADJUSTMENTS SEE SHEETS 57 THRU 78

EXISTING FENCE TYPES INCLUDE CHAIN LINK (C.L.), BARBED WIRE (B.W.), WIRE MESH (W.M.), AND WOOD FENCE (W.F.).

FOR INFORMATIONAL PURPOSES ONLY
ALL PLAN DETAIL AND INFORMATION IS NOT SHOWN ON THIS 90% COMPLETED SET OF PLANS.
90% SUBMITTAL - JULY 2004

DESIGNED:	TSH
DRAWN:	NPR
CRP:	330222
HOR.	1" =30'
VERT.	N/A
DATE:	7/2004
DWG:	
SHEET	29 OF 99

CALL 48 HOURS BEFORE YOU DIG 1-800-553-4344 "It's the Law" NORTHWEST UTILITIES NOTIFICATION CENTER

Harper Houf Peterson Righellis Inc.
ENGINEERS • PLANNERS • SURVEYORS
1104 MAIN STREET, SUITE 100, VANCOUVER, WA 98660
TEL 360.750.1131 www.hhpr.com FAX 360.750.1141

DESIGN & ENGINEERING DIVISION

NE 88TH STREET
SITE PREP AND DEMOLITION
STA 126+25 TO 139+75

proud past, promising future
CLARK COUNTY WASHINGTON

P:\Clrk-12 INE 88th\ICRK12-DWGS\ Crk12-SP-WEST.DWG

MATCHLINE STA. 139+75 - SEE SHEET 29

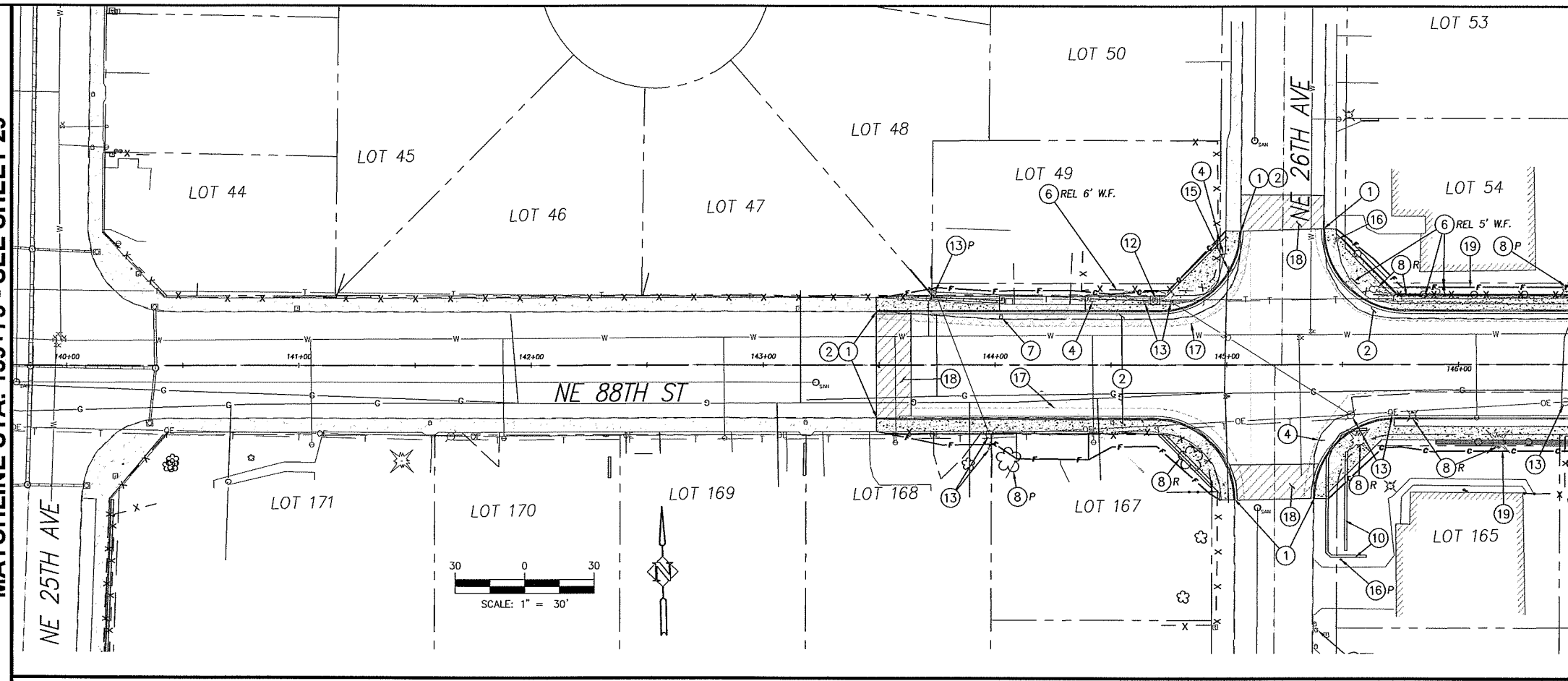

MATCHLINE STA. 146+50 - SEE BELOW

MATCHLINE STA. 146+50 - SEE ABOVE

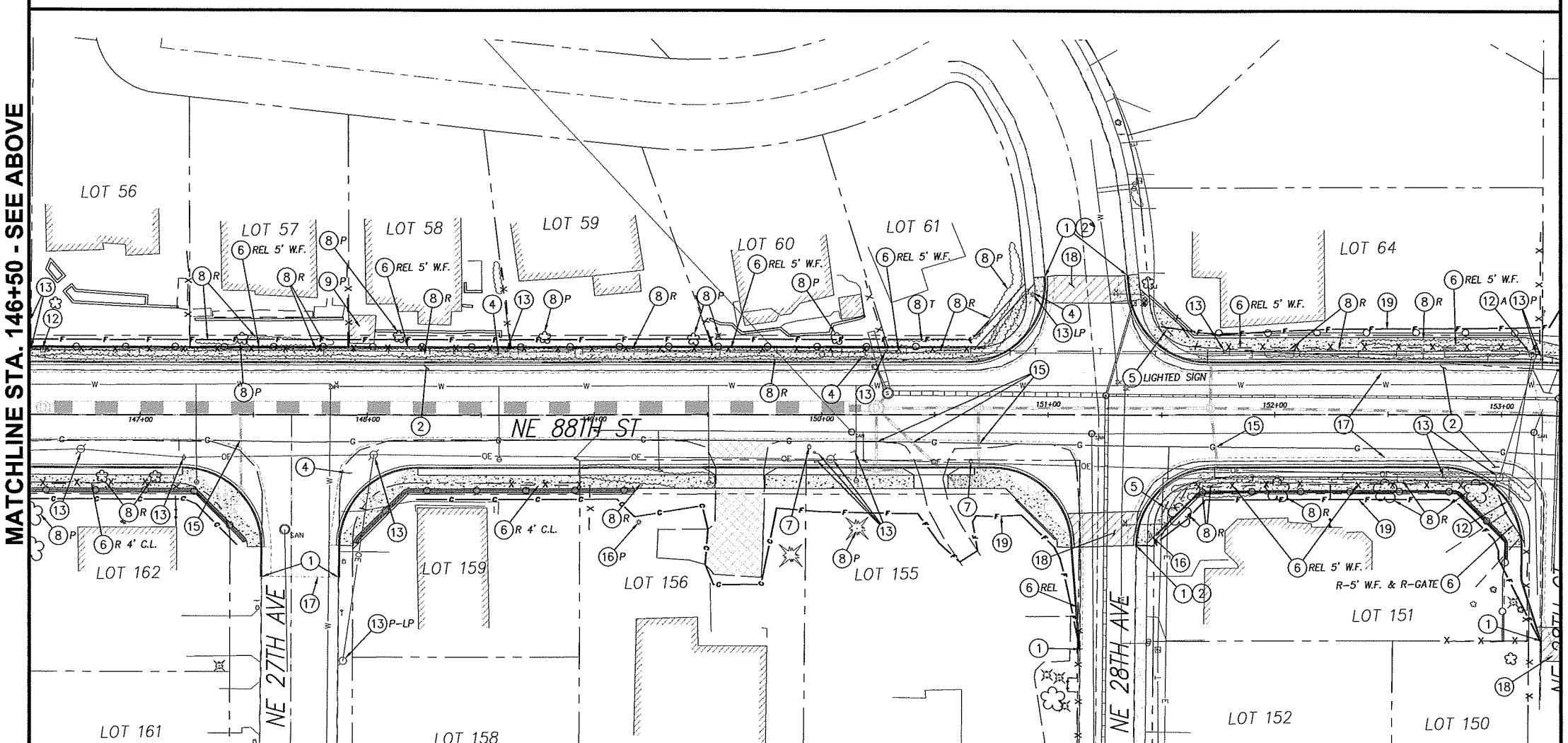

MATCHLINE STA. 153+25 - SEE SHEET 31

CONSTRUCTION NOTES:

1. REMOVE EXISTING CURB. SAWCUT AT ALL CONNECTIONS.
2. REMOVE EXISTING SIDEWALK AND/OR RAMP. SAWCUT AT ALL CONNECTIONS.
4. EXISTING TRAFFIC/STREET SIGN TO BE RELOCATED BY OTHERS UNLESS NOTED TO BE PROTECTED (P). COORDINATE WITH FIELD INSPECTOR.
5. RELOCATE EXISTING PRIVATE SIGN OUTSIDE ROW AS DIRECTED UNLESS NOTED TO BE PROTECTED (P). COORDINATE WITH PROPERTY OWNER.
6. RELOCATE (REL) IN KIND, REMOVE (R), ADJUST (A), OR PROTECT (P) EXISTING FENCE AND GATES. COORDINATE REMOVALS AND RELOCATIONS WITH PROPERTY OWNER.
7. RELOCATE EXISTING MAILBOX PER WSDOT/APWA STANDARD PLAN H-12 UNLESS NOTED TO BE (P) PROTECTED.
8. REMOVE (R), PROTECT (P), OR TRIM (T) EXISTING SHRUB OR TREE AS SHOWN ON THE PLANS OR AS DIRECTED BY FIELD INSPECTOR.
9. EXISTING STRUCTURE TO BE (R) REMOVED OR (P) PROTECTED.
10. RECONSTRUCT EXISTING RETAINING WALL UNLESS NOTED TO (P) PROTECT OR (R) REMOVE.
11. CAUTION!! WATER, SANITARY SEWER, GAS OR UTILITY CROSSINGS. POTHOLE OR VERIFY ALL CROSSINGS PRIOR TO CONSTRUCTION TO ENSURE CLEARANCE OF UTILITIES. COORDINATE WITH APPROPRIATE UTILITY AGENCY.
12. EXISTING UTILITY PEDESTAL/VAULT TO BE REMOVED OR RELOCATED BY OTHERS, UNLESS OTHERWISE NOTED WITH (P) PROTECT OR (A) ADJUST. COORDINATE WORK WITH APPROPRIATE UTILITY AGENCY.
13. EXISTING UTILITY POLE, LIGHT POLE, AND/OR GUY WIRE TO BE REMOVED OR RELOCATED BY OTHERS, UNLESS OTHERWISE NOTED WITH (P) PROTECT OR (A) ADJUST. COORDINATE WORK WITH APPROPRIATE UTILITY AGENCY. EXISTING LIGHT POLES ARE NOTED WITH (LP).
14. TRAFFIC SIGNAL POLE OR JUNCTION BOX TO BE RELOCATED UNLESS OTHERWISE NOTED WITH (P) PROTECT OR (A) ADJUST. EXISTING LIGHT POLES ARE NOTED WITH (LP).
15. CAUTION!! HIGH PRESSURE GAS LINE. CONTRACTOR TO CONTACT LINDA CHRISTY OR FAY THOMAS AT (503) 226-4211 EXT. 4313, PRIOR TO ANY EXCAVATION AROUND LINES.
16. EXISTING PRIVATE LIGHT POLE TO BE RELOCATED.
17. SAWCUT AND REMOVE EXISTING PAVEMENT AT ALL CONNECTIONS AND TRANSITIONS A MINIMUM OF 4' FROM FACE OF NEW CURB, 1' FROM EDGE OF EXISTING PAVEMENT, OR AS DIRECTED BY FIELD INSPECTOR.
18. PLANE EXISTING A.C. PAVEMENT AND TRANSITION OVERLAY TO EXISTING CURB OR PAVEMENT PER DETAILS ON SHEET 12.
19. LIMITS OF GRADING
90. RELOCATE (R), PROTECT (P), OR ADJUST (A) EXISTING IRRIGATION AS REQUIRED AND DIRECTED. ALL DISTURBED IRRIGATION SHALL BE REPAIRED AS REQUIRED.
99. PLANE 2" EXISTING A.C. PAVEMENT AND REPLACE WITH 2" CLASS 'A' ASPHALT PAVEMENT.

GENERAL NOTES:
FOR WATER, STORM, AND SANITARY SEWER ADJUSTMENTS SEE SHEETS 57 THRU 78

EXISTING FENCE TYPES INCLUDE CHAIN LINK (C.L.), BARBED WIRE (B.W.), WIRE MESH (W.M.), AND WOOD FENCE (W.F.).

FOR INFORMATIONAL PURPOSES ONLY
ALL PLAN DETAIL AND INFORMATION IS NOT SHOWN ON THIS 90% COMPLETED SET OF PLANS.
90% SUBMITTAL - JULY 2004

DESIGNED:	TSH
DRAWN:	NPR
CRP:	330222
HOR.	1" =30'
VERT.	N/A
DATE:	7/2004
DWG:	SHEET 30 OF 99

CALL 48 HOURS BEFORE YOU DIG 1-800-553-4344 "It's the Law" NORTHWEST UTILITIES NOTIFICATION CENTER

Harper Houf Peterson Righellis Inc.
ENGINEERS • PLANNERS • SURVEYORS
1104 MAIN STREET, SUITE 100, VANCOUVER, WA 98660
TEL 360.750.1131 www.hhpr.com FAX 360.750.1141

DESIGN & ENGINEERING DIVISION

NE 88TH STREET
SITE PREP AND DEMOLITION
STA 139+75 TO STA 153+25

proud past, promising future
CLARK COUNTY WASHINGTON

P:\Clk-12 (NE 88th)\CRK12-DWGS\Crk12-SP-EAST.DWG

MATCHLINE STA. 153+25 - SEE SHEET 30

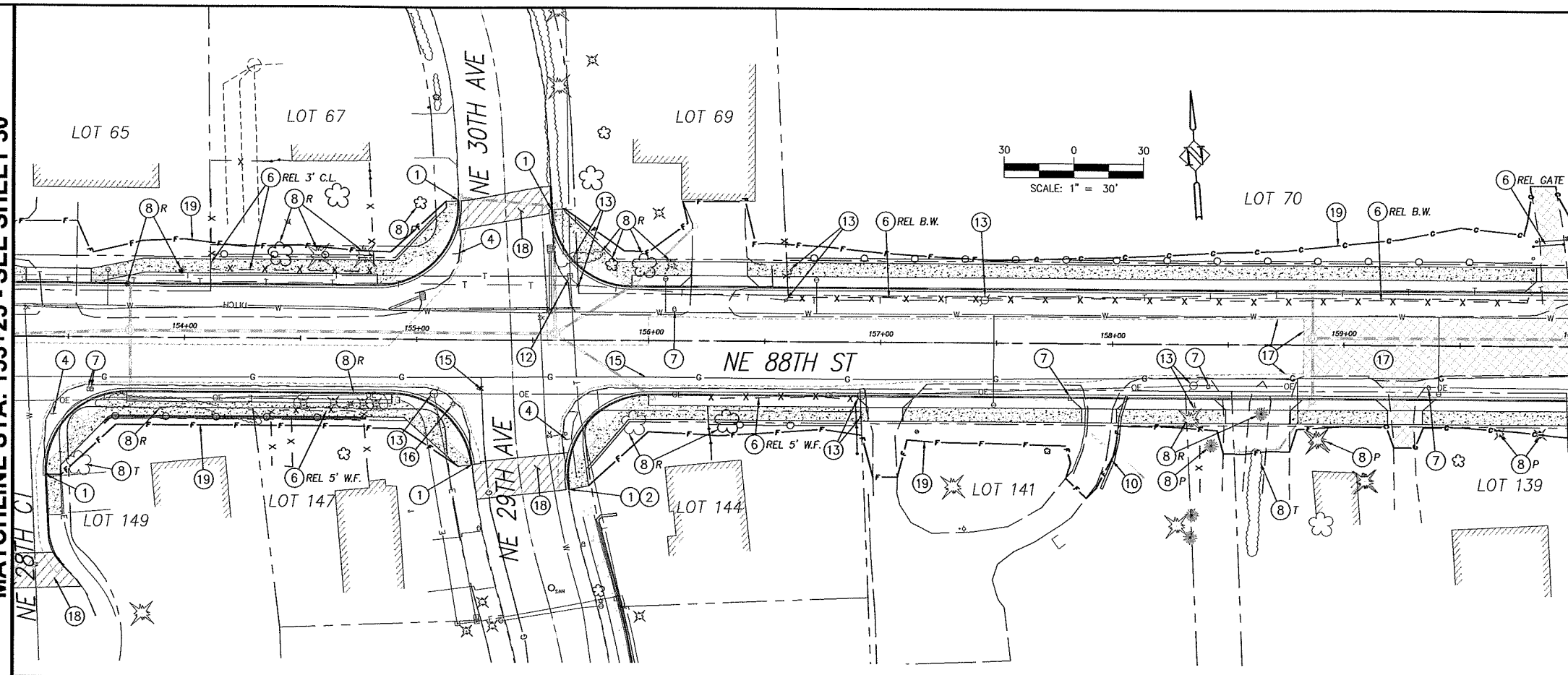

MATCHLINE STA. 160+00 - SEE ABOVE

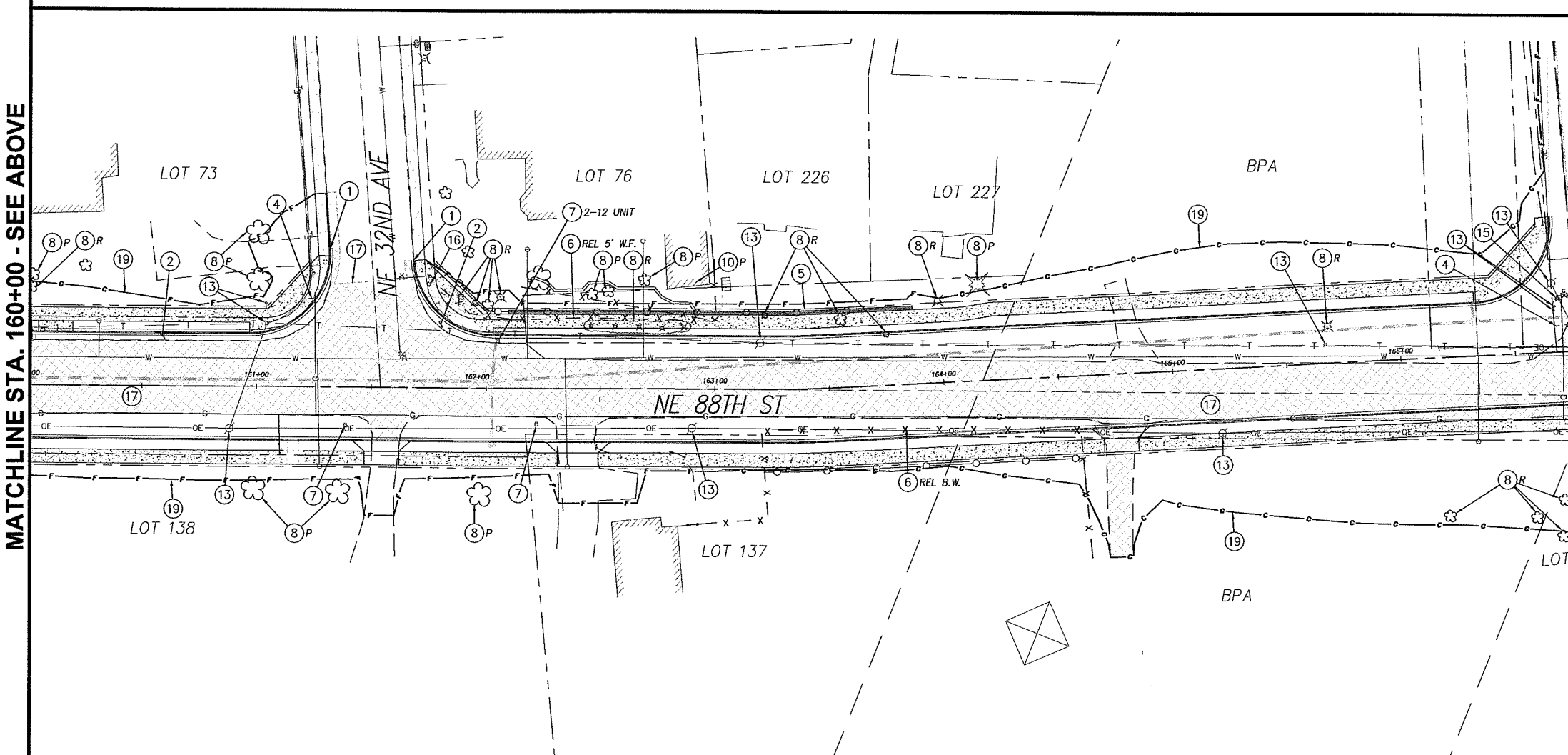

MATCHLINE STA. 160+00 - SEE BELOW

MATCHLINE STA. 166+75 - SEE SHEET 32

CONSTRUCTION NOTES:

1. REMOVE EXISTING CURB. SAWCUT AT ALL CONNECTIONS.
2. REMOVE EXISTING SIDEWALK AND/OR RAMP. SAWCUT AT ALL CONNECTIONS.
4. EXISTING TRAFFIC/STREET SIGN TO BE RELOCATED BY OTHERS UNLESS NOTED TO BE PROTECTED (P). COORDINATE WITH FIELD INSPECTOR.
5. RELOCATE EXISTING PRIVATE SIGN OUTSIDE ROW AS DIRECTED UNLESS NOTED TO BE PROTECTED (P). COORDINATE WITH PROPERTY OWNER.
6. RELOCATE (REL) IN KIND, REMOVE (R), ADJUST (A), OR PROTECT (P) EXISTING FENCE AND GATES. COORDINATE REMOVALS AND RELOCATIONS WITH PROPERTY OWNER.
7. RELOCATE EXISTING MAILBOX PER WSDOT/APWA STANDARD PLAN H-12 UNLESS NOTED TO BE (P) PROTECTED.
8. REMOVE (R), PROTECT (P), OR TRIM (T) EXISTING SHRUB OR TREE AS SHOWN ON THE PLANS OR AS DIRECTED BY FIELD INSPECTOR.
9. EXISTING STRUCTURE TO BE (R) REMOVED OR (P) PROTECTED.
10. RECONSTRUCT EXISTING RETAINING WALL UNLESS NOTED TO (P) PROTECT OR (R) REMOVE.
11. CAUTION!! WATER, SANITARY SEWER, GAS OR UTILITY CROSSINGS. POTHOLE OR VERIFY ALL CROSSINGS PRIOR TO CONSTRUCTION TO ENSURE CLEARANCE OF UTILITIES. COORDINATE WITH APPROPRIATE UTILITY AGENCY.
12. EXISTING UTILITY PEDESTAL/VAULT TO BE REMOVED OR RELOCATED BY OTHERS, UNLESS OTHERWISE NOTED WITH (P) PROTECT OR (A) ADJUST. COORDINATE WORK WITH APPROPRIATE UTILITY AGENCY.
13. EXISTING UTILITY POLE, LIGHT POLE, AND/OR GUY WIRE TO BE REMOVED OR RELOCATED BY OTHERS, UNLESS OTHERWISE NOTED WITH (P) PROTECT OR (A) ADJUST. COORDINATE WORK WITH APPROPRIATE UTILITY AGENCY. EXISTING LIGHT POLES ARE NOTED WITH (LP).
14. TRAFFIC SIGNAL POLE OR JUNCTION BOX TO BE RELOCATED UNLESS OTHERWISE NOTED WITH (P) PROTECT OR (A) ADJUST. EXISTING LIGHT POLES ARE NOTED WITH (LP).
15. CAUTION!! HIGH PRESSURE GAS LINE. CONTRACTOR TO CONTACT LINDA CHRISTY OR FAY THOMAS AT (503) 226-4211 EXT. 4313, PRIOR TO ANY EXCAVATION AROUND LINES.
16. EXISTING PRIVATE LIGHT POLE TO BE RELOCATED.
17. SAWCUT AND REMOVE EXISTING PAVEMENT AT ALL CONNECTIONS AND TRANSITIONS A MINIMUM OF 4' FROM FACE OF NEW CURB, 1' FROM EDGE OF EXISTING PAVEMENT, OR AS DIRECTED BY FIELD INSPECTOR.
18. PLANE EXISTING A.C. PAVEMENT AND TRANSITION OVERLAY TO EXISTING CURB OR PAVEMENT PER DETAILS ON SHEET 12.
19. LIMITS OF GRADING
90. RELOCATE (R), PROTECT (P), OR ADJUST (A) EXISTING IRRIGATION AS REQUIRED AND DIRECTED. ALL DISTURBED IRRIGATION SHALL BE REPAIRED AS REQUIRED.
99. PLANE 2" EXISTING A.C. PAVEMENT AND REPLACE WITH 2" CLASS 'A' ASPHALT PAVEMENT.

GENERAL NOTES:
FOR WATER, STORM, AND SANITARY SEWER ADJUSTMENTS SEE SHEETS 57 THRU 78

EXISTING FENCE TYPES INCLUDE CHAIN LINK (C.L.), BARBED WIRE (B.W.), WIRE MESH (W.M.), AND WOOD FENCE (W.F.).

FOR INFORMATIONAL PURPOSES ONLY
ALL PLAN DETAIL AND INFORMATION IS NOT SHOWN ON THIS 90% COMPLETED SET OF PLANS.
90% SUBMITTAL - JULY 2004

DESIGNED:	TSH
DRAWN:	NPR
CRP:	330222
HOR.	1" =30'
VERT.	N/A
DATE:	7/2004
DWG:	
SHEET	31 OF 99

CALL 48 HOURS BEFORE YOU DIG 1-800-553-4344 "It's the Law" NORTHWEST UTILITIES NOTIFICATION CENTER

Harper Houf Peterson Righellis Inc.
ENGINEERS • PLANNERS • SURVEYORS
1104 MAIN STREET, SUITE 100, VANCOUVER, WA 98660
TEL 360.750.1131 www.hhpr.com FAX 360.750.1141

DESIGN & ENGINEERING DIVISION

NE 88TH STREET
SITE PREP AND DEMOLITION
STA 153+25 TO STA 166+75

proud past, promising future
CLARK COUNTY WASHINGTON

P:\Crk-12 (NE 88th)\CRK12-DWGS\Crk12-SP-EAST.DWG

MATCHLINE STA. 166+75 - SEE SHEET 31

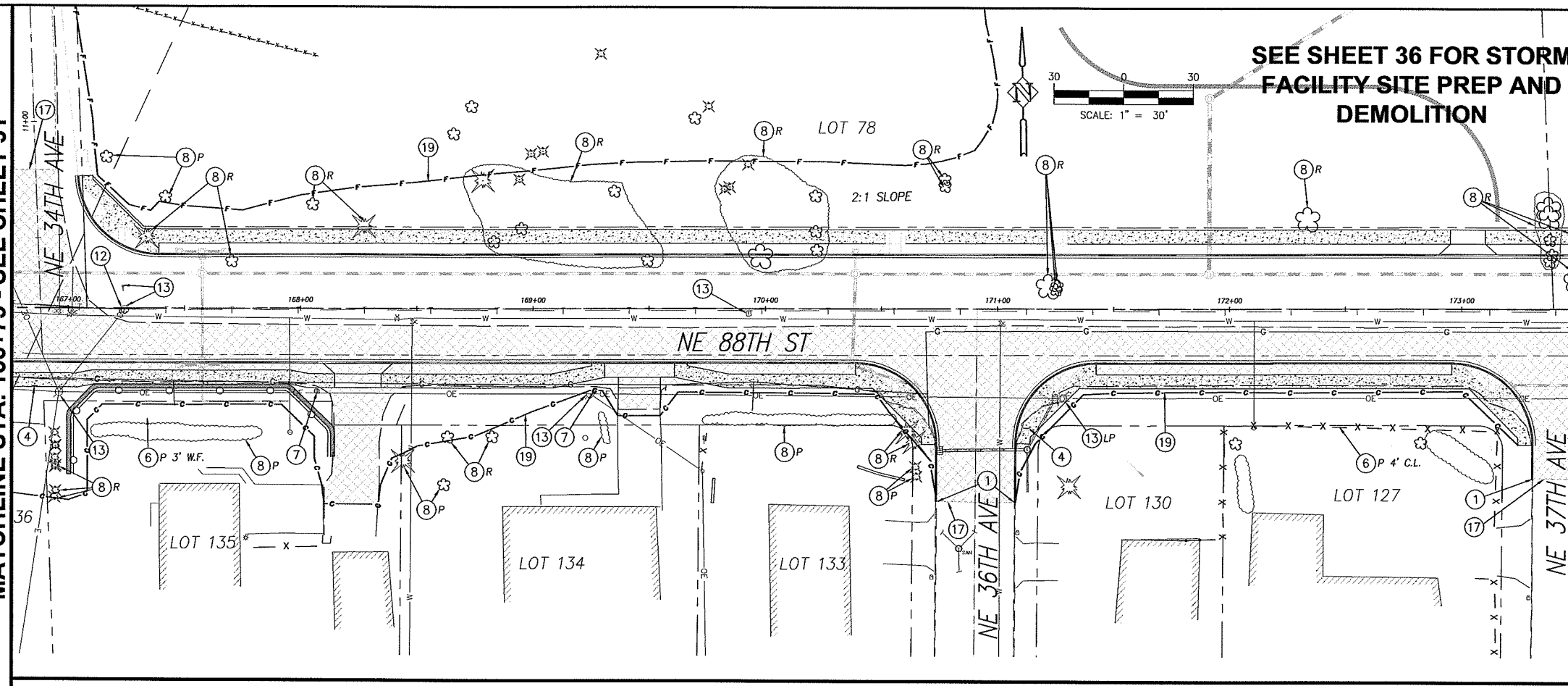

MATCHLINE STA. 173+50 - SEE BELOW

MATCHLINE STA. 173+50 - SEE ABOVE

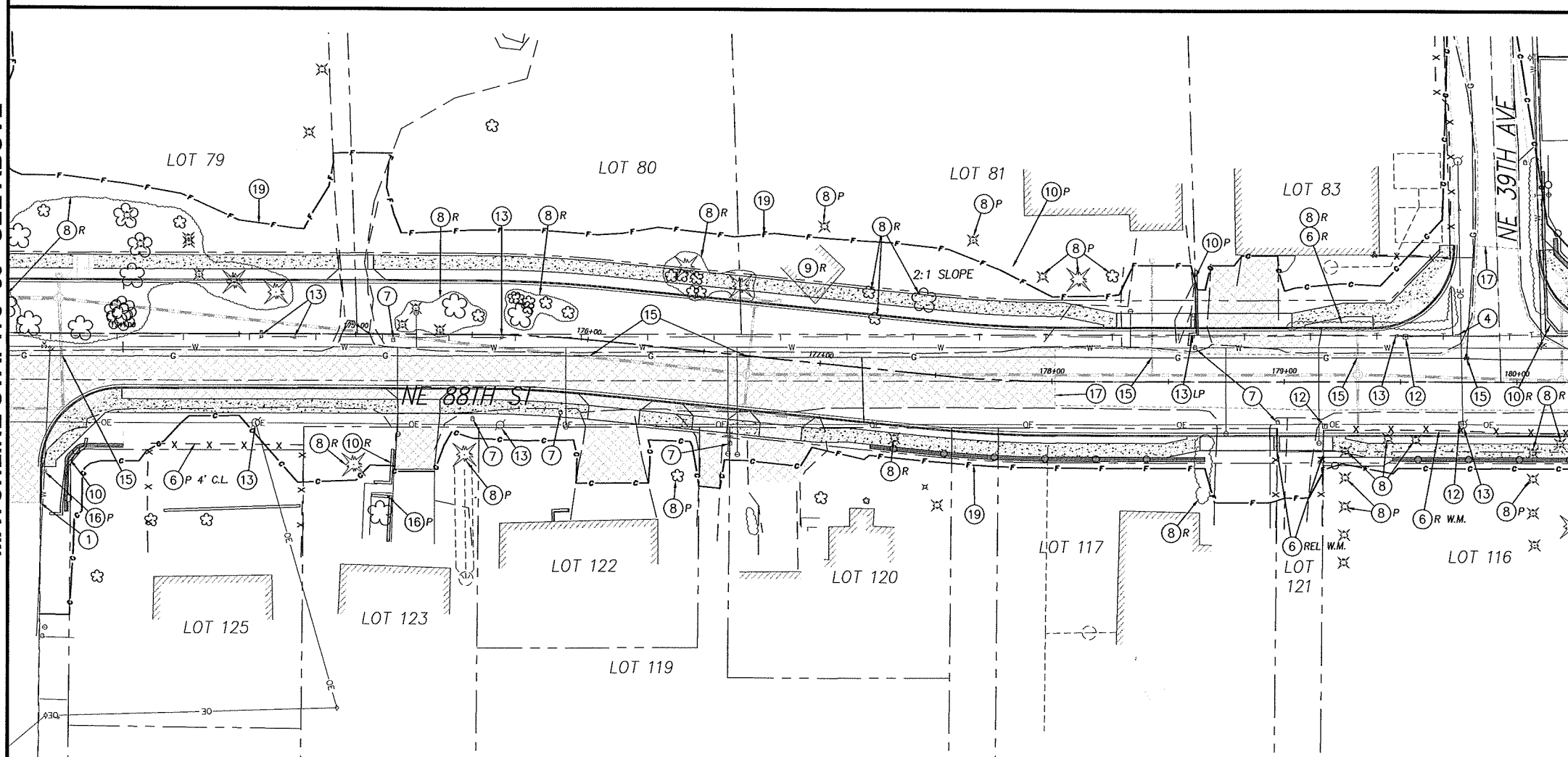

MATCHLINE STA. 180+25 - SEE SHEET 33

CONSTRUCTION NOTES:

1. REMOVE EXISTING CURB. SAWCUT AT ALL CONNECTIONS.
2. REMOVE EXISTING SIDEWALK AND/OR RAMP. SAWCUT AT ALL CONNECTIONS.
4. EXISTING TRAFFIC/STREET SIGN TO BE RELOCATED BY OTHERS UNLESS NOTED TO BE PROTECTED (P). COORDINATE WITH FIELD INSPECTOR.
5. RELOCATE EXISTING PRIVATE SIGN OUTSIDE ROW AS DIRECTED UNLESS NOTED TO BE PROTECTED (P). COORDINATE WITH PROPERTY OWNER.
6. RELOCATE (REL) IN KIND, REMOVE (R), ADJUST (A), OR PROTECT (P) EXISTING FENCE AND GATES. COORDINATE REMOVALS AND RELOCATIONS WITH PROPERTY OWNER.
7. RELOCATE EXISTING MAILBOX PER WSDOT/APWA STANDARD PLAN H-12 UNLESS NOTED TO BE (P) PROTECTED.
8. REMOVE (R), PROTECT (P), OR TRIM (T) EXISTING SHRUB OR TREE AS SHOWN ON THE PLANS OR AS DIRECTED BY FIELD INSPECTOR.
9. EXISTING STRUCTURE TO BE (R) REMOVED OR (P) PROTECTED.
10. RECONSTRUCT EXISTING RETAINING WALL UNLESS NOTED TO (P) PROTECT OR (R) REMOVE.
11. CAUTION!! WATER, SANITARY SEWER, GAS OR UTILITY CROSSINGS. POTHOLE OR VERIFY ALL CROSSINGS PRIOR TO CONSTRUCTION TO ENSURE CLEARANCE OF UTILITIES. COORDINATE WITH APPROPRIATE UTILITY AGENCY.
12. EXISTING UTILITY PEDESTAL/VAULT TO BE REMOVED OR RELOCATED BY OTHERS, UNLESS OTHERWISE NOTED WITH (P) PROTECT OR (A) ADJUST. COORDINATE WORK WITH APPROPRIATE UTILITY AGENCY.
13. EXISTING UTILITY POLE, LIGHT POLE, AND/OR GUY WIRE TO BE REMOVED OR RELOCATED BY OTHERS, UNLESS OTHERWISE NOTED WITH (P) PROTECT OR (A) ADJUST. COORDINATE WORK WITH APPROPRIATE UTILITY AGENCY. EXISTING LIGHT POLES ARE NOTED WITH (LP).
14. TRAFFIC SIGNAL POLE OR JUNCTION BOX TO BE RELOCATED UNLESS OTHERWISE NOTED WITH (P) PROTECT OR (A) ADJUST. EXISTING LIGHT POLES ARE NOTED WITH (LP).
15. CAUTION!! HIGH PRESSURE GAS LINE. CONTRACTOR TO CONTACT LINDA CHRISTY OR FAY THOMAS AT (503) 226-4211 EXT. 4313, PRIOR TO ANY EXCAVATION AROUND LINES.
16. EXISTING PRIVATE LIGHT POLE TO BE RELOCATED.
17. SAWCUT AND REMOVE EXISTING PAVEMENT AT ALL CONNECTIONS AND TRANSITIONS A MINIMUM OF 4' FROM FACE OF NEW CURB, 1' FROM EDGE OF EXISTING PAVEMENT, OR AS DIRECTED BY FIELD INSPECTOR.
18. PLANE EXISTING A.C. PAVEMENT AND TRANSITION OVERLAY TO EXISTING CURB OR PAVEMENT PER DETAILS ON SHEET 12.
19. LIMITS OF GRADING
90. RELOCATE (R), PROTECT (P), OR ADJUST (A) EXISTING IRRIGATION AS REQUIRED AND DIRECTED. ALL DISTURBED IRRIGATION SHALL BE REPAIRED AS REQUIRED.
99. PLANE 2" EXISTING A.C. PAVEMENT AND REPLACE WITH 2" CLASS 'A' ASPHALT PAVEMENT.

GENERAL NOTES:
FOR WATER, STORM, AND SANITARY SEWER ADJUSTMENTS SEE SHEETS 57 THRU 78

EXISTING FENCE TYPES INCLUDE CHAIN LINK (C.L.), BARBED WIRE (B.W.), WIRE MESH (W.M.), AND WOOD FENCE (W.F.).

FOR INFORMATIONAL PURPOSES ONLY
ALL PLAN DETAIL AND INFORMATION IS NOT SHOWN ON THIS 90% COMPLETED SET OF PLANS.
90% SUBMITTAL - JULY 2004

DESIGNED:	TSH
DRAWN:	NPR
CRP:	330222
HOR.	1" =30'
VERT.	N/A
DATE:	7/2004
DWG:	SHEET 32 OF 99

CALL 48 HOURS BEFORE YOU DIG 1-800-553-4344 "It's the Law" NORTHWEST UTILITIES NOTIFICATION CENTER

Harper Houf Peterson Righellis Inc.
ENGINEERS • PLANNERS • SURVEYORS
1104 MAIN STREET, SUITE 100, VANCOUVER, WA 98660
TEL 360.750.1131 www.hhpr.com FAX 360.750.1141

DESIGN & ENGINEERING DIVISION

NE 88TH STREET
SITE PREP AND DEMOLITION
STA 166+75 TO STA 180+25

proud past, promising future
CLARK COUNTY WASHINGTON

P:\Crk:12 NE 88th\\CRK12-DW\GSI Crk12-SP-EAST.DWG

MATCHLINE STA. 180+25 - SEE SHEET 32

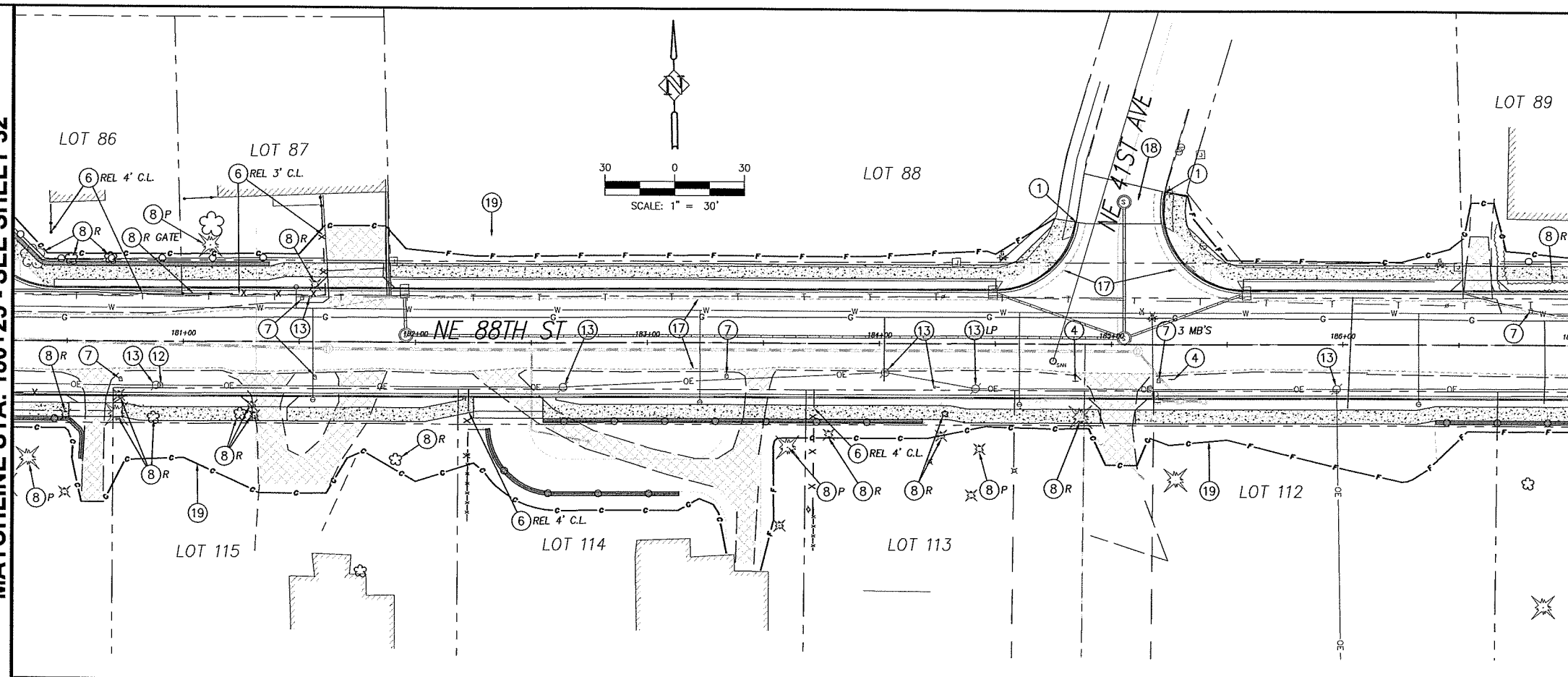

MATCHLINE STA. 187+00 - SEE ABOVE

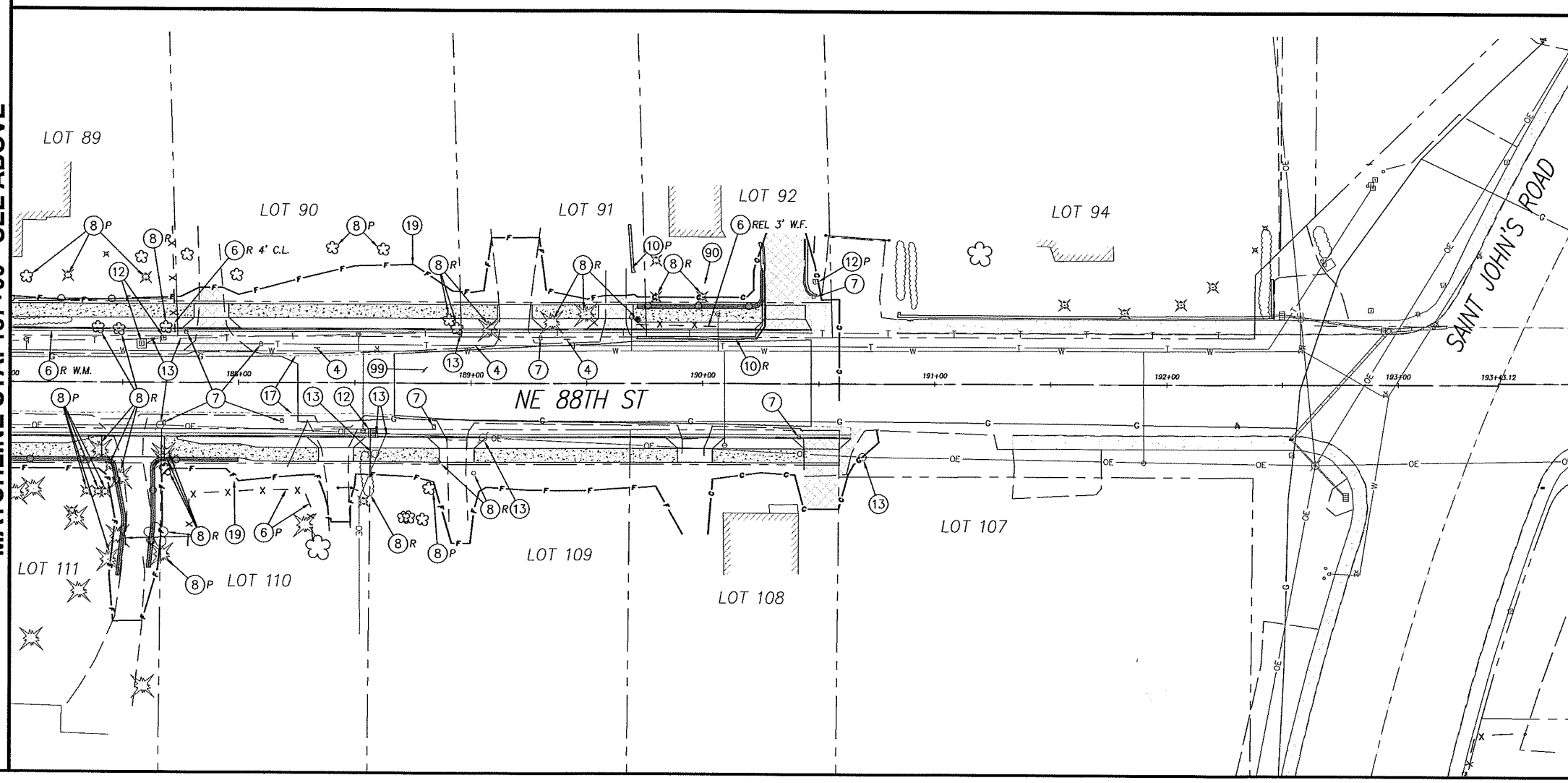

MATCHLINE STA. 187+00 - SEE BELOW

CONSTRUCTION NOTES:

1. REMOVE EXISTING CURB. SAWCUT AT ALL CONNECTIONS.
2. REMOVE EXISTING SIDEWALK AND/OR RAMP. SAWCUT AT ALL CONNECTIONS.
4. EXISTING TRAFFIC/STREET SIGN TO BE RELOCATED BY OTHERS UNLESS NOTED TO BE PROTECTED (P). COORDINATE WITH FIELD INSPECTOR.
5. RELOCATE EXISTING PRIVATE SIGN OUTSIDE ROW AS DIRECTED UNLESS NOTED TO BE PROTECTED (P). COORDINATE WITH PROPERTY OWNER.
6. RELOCATE (REL) IN KIND, REMOVE (R), ADJUST (A), OR PROTECT (P) EXISTING FENCE AND GATES. COORDINATE REMOVALS AND RELOCATIONS WITH PROPERTY OWNER.
7. RELOCATE EXISTING MAILBOX PER WSDOT/APWA STANDARD PLAN H-12 UNLESS NOTED TO BE (P) PROTECTED.
8. REMOVE (R), PROTECT (P), OR TRIM (T) EXISTING SHRUB OR TREE AS SHOWN ON THE PLANS OR AS DIRECTED BY FIELD INSPECTOR.
9. EXISTING STRUCTURE TO BE (R) REMOVED OR (P) PROTECTED.
10. RECONSTRUCT EXISTING RETAINING WALL UNLESS NOTED TO (P) PROTECT OR (R) REMOVE.
11. CAUTION!! WATER, SANITARY SEWER, GAS OR UTILITY CROSSINGS. POTHOLE OR VERIFY ALL CROSSINGS PRIOR TO CONSTRUCTION TO ENSURE CLEARANCE OF UTILITIES. COORDINATE WITH APPROPRIATE UTILITY AGENCY.
12. EXISTING UTILITY PEDESTAL/VAULT TO BE REMOVED OR RELOCATED BY OTHERS, UNLESS OTHERWISE NOTED WITH (P) PROTECT OR (A) ADJUST. COORDINATE WORK WITH APPROPRIATE UTILITY AGENCY.
13. EXISTING UTILITY POLE, LIGHT POLE, AND/OR GUY WIRE TO BE REMOVED OR RELOCATED BY OTHERS, UNLESS OTHERWISE NOTED WITH (P) PROTECT OR (A) ADJUST. COORDINATE WORK WITH APPROPRIATE UTILITY AGENCY. EXISTING LIGHT POLES ARE NOTED WITH (LP).
14. TRAFFIC SIGNAL POLE OR JUNCTION BOX TO BE RELOCATED UNLESS OTHERWISE NOTED WITH (P) PROTECT OR (A) ADJUST. EXISTING LIGHT POLES ARE NOTED WITH (LP).
15. CAUTION!! HIGH PRESSURE GAS LINE. CONTRACTOR TO CONTACT LINDA CHRISTY OR FAY THOMAS AT (503) 226-4211 EXT. 4313, PRIOR TO ANY EXCAVATION AROUND LINES.
16. EXISTING PRIVATE LIGHT POLE TO BE RELOCATED.
17. SAWCUT AND REMOVE EXISTING PAVEMENT AT ALL CONNECTIONS AND TRANSITIONS A MINIMUM OF 4' FROM FACE OF NEW CURB, 1' FROM EDGE OF EXISTING PAVEMENT, OR AS DIRECTED BY FIELD INSPECTOR.
18. PLANE EXISTING A.C. PAVEMENT AND TRANSITION OVERLAY TO EXISTING CURB OR PAVEMENT PER DETAILS ON SHEET 12.
19. LIMITS OF GRADING
90. RELOCATE (R), PROTECT (P), OR ADJUST (A) EXISTING IRRIGATION AS REQUIRED AND DIRECTED. ALL DISTURBED IRRIGATION SHALL BE REPAIRED AS REQUIRED.
99. PLANE 2" EXISTING A.C. PAVEMENT AND REPLACE WITH 2" CLASS 'A' ASPHALT PAVEMENT.

GENERAL NOTES:
FOR WATER, STORM, AND SANITARY SEWER ADJUSTMENTS SEE SHEETS 57 THRU 78

EXISTING FENCE TYPES INCLUDE CHAIN LINK (C.L.), BARBED WIRE (B.W.), WIRE MESH (W.M.), AND WOOD FENCE (W.F.).

FOR INFORMATIONAL PURPOSES ONLY
ALL PLAN DETAIL AND INFORMATION IS NOT SHOWN ON THIS 90% COMPLETED SET OF PLANS.
90% SUBMITTAL - JULY 2004

DESIGNED:	TSH
DRAWN:	NPR
CRP:	330222
HOR:	1" =30'
VERT.	N/A
DATE:	7/2004
DWG:	
SHEET	33 OF 99

CALL 48 HOURS BEFORE YOU DIG
1-800-553-4344
"It's the Law"
NORTHWEST UTILITIES NOTIFICATION CENTER

Harper Houf Peterson Righellis Inc.
ENGINEERS • PLANNERS • SURVEYORS
1104 MAIN STREET, SUITE 100, VANCOUVER, WA 98660
TEL 360.750.1141 www.hhpr.com FAX 360.750.1141

DESIGN & ENGINEERING DIVISION

NE 88TH STREET
SITE PREP AND DEMOLITION
STA 180+25 TO STA 190+46.65

proud past, promising future
CLARK COUNTY WASHINGTON

P:\Clk-12 NE 88th\CRK12-DWGS\Clk12-SP-FAST.DWG

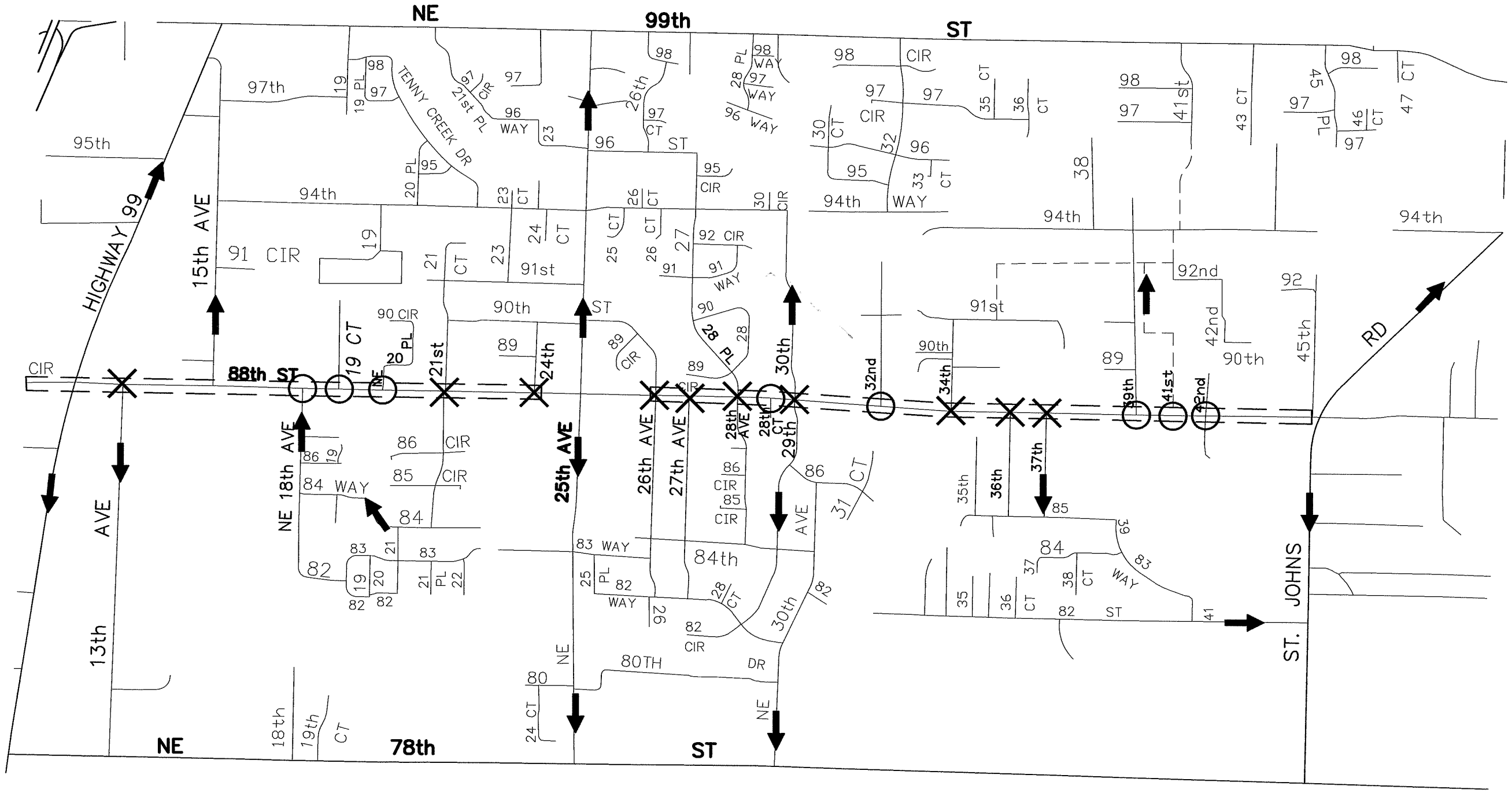

LEGEND

- POTENTIAL SIDE STREET CLOSURES DURING CONSTRUCTION
- SIDE STREET ACCESS MAINTAINED DURING CONSTRUCTION
- POTENTIAL DETOUR ROUTES DURING CONSTRUCTION
- PROJECT LIMITS
- FUTURE STREET

GENERAL NOTE:

CONTRACTOR TO MAINTAIN ONE LANE OF TRAFFIC AT ALL TIMES AND ACCESS TO DRIVEWAYS ALONG 88TH STREET.

78TH ST, 99TH ST, 13TH AVE, 15TH AVE, 25TH AVE, 29TH AVE AND 30TH AVE ARE POTENTIAL MAIN STREETS FOR DETOUR ROUTES.

FOR INFORMATIONAL PURPOSES ONLY

ALL PLAN DETAIL AND INFORMATION IS NOT SHOWN ON THIS 90% COMPLETED SET OF PLANS.

90% SUBMITTAL - JULY 2004

DESIGNED:	GAA
DRAWN:	JLB
CRP:	CRK-12
HOR:	1"=400'
VERT.	N/A
DATE:	7/2004
DWG:	
SHEET	34 OF 99

CALL 48 HOURS BEFORE YOU DIG 1-800-553-4344 "It's the Law" NORTHWEST UTILITIES NOTIFICATION CENTER

Harper Houf Peterson Righellis Inc.
ENGINEERS • PLANNERS
5200 SW MACADAM AVENUE, SUITE 560, PORTLAND, OR 97239
TEL 503.221.1131 www.hrcivil.com FAX 503.221.1171

DESIGN & ENGINEERING DIVISION

NE 88TH STREET DETOUR / PHASING PLAN

proud past, promising future

CLARK COUNTY WASHINGTON

P:\Crk-12 (NE 88th)\CRK12-DWGS\ CRK12-Detour.dwg

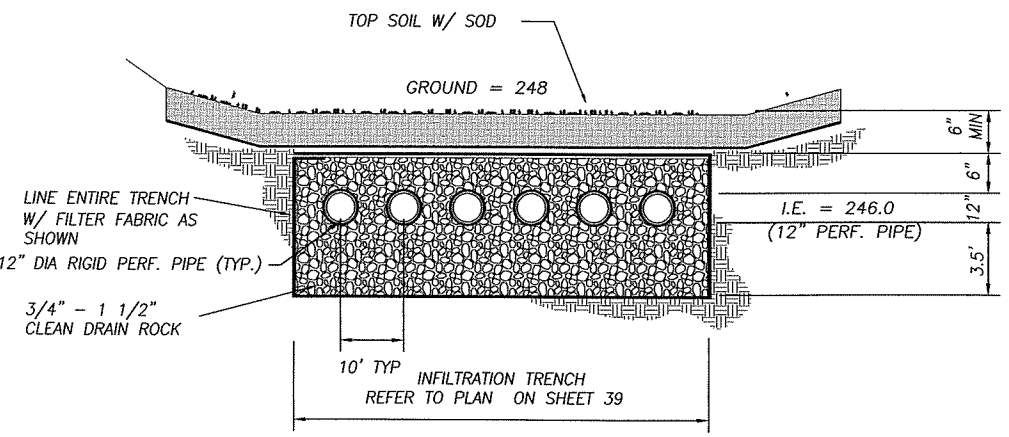

INFILTRATION FACILITY DETAIL

N.T.S.

NOTES

1. AGGREGATE SHALL BE COMPLETELY ENCASED IN ENGINEERING GEOTEXTILE MATERIAL. IN THE CASE OF AN AGGREGATE SURFACE, GEOTEXTILE SHOULD SURROUND ALL OF THE AGGREGATE FILL MATERIAL EXCEPT FOR THE TOP ONE-FOOT, WHICH IS PLACED OVER THE GEOTEXTILE.

2. THE INFILTRATION TRENCH IS GENERALLY USED FOR SMALL DRAINAGE AREAS, AN EMERGENCY SPILLWAY MAY NOT BE NECESSARY. HOWEVER, AN OVERFLOW OUTLET MAY BE REQUIRED TO BE PROVIDED.

3. AN OBSERVATION WELL SHOULD BE INSTALLED AT THE LOWER END OF THE INFILTRATION TRENCH TO CHECK WATER LEVELS, DRAWDOWN TIME, SEDIMENT ACCUMULATION, AND CONDUCT WATER QUALITY MONITORING. FOR LARGER TRENCHES A 12"-36" WELL CAN BE INSTALLED TO FACILITATE MAINTENANCE OPERATIONS SUCH AS PUMPING OUT OF SEDIMENT. THE TOP OF THE WELL IS TO BE CAPPED TO DISCOURAGE VANDALISM AND TAMPERING. PUBLIC INFILTRATION TRENCH REQUIRES A CLEANOUT TO BE INSTALLED AT END OF PERFORATED PIPE.

4. THE STONE AGGREGATE IS TO BE PLACED IN LIFTS AND COMPACTED USING PLATE COMPACTORS. THE MAXIMUM LOOSE LIFT THICKNESS IS TO BE 12".

5. FOLLOWING THE STONE AGGREGATE PLACEMENT, THE GEOTEXTILE MUST BE FOLDED OVER THE TOP TO FORM A 12" MINIMUM LONGITUDINAL OVERLAP. THE UPSTREAM ROLL SHALL OVERLAP A MINIMUM OF 2' OVER THE DOWNSTREAM ROLL (PROVIDE SHINGLE AFFECT).

6. VOIDS BETWEEN THE GEOTEXTILE AND THE EXCAVATION SIDES MUST BE AVOIDED.

7. IF VERTICALLY EXCAVATED WALLS BECOME DIFFICULT TO MAINTAIN, USE TRAPEZOIDAL SECTION.

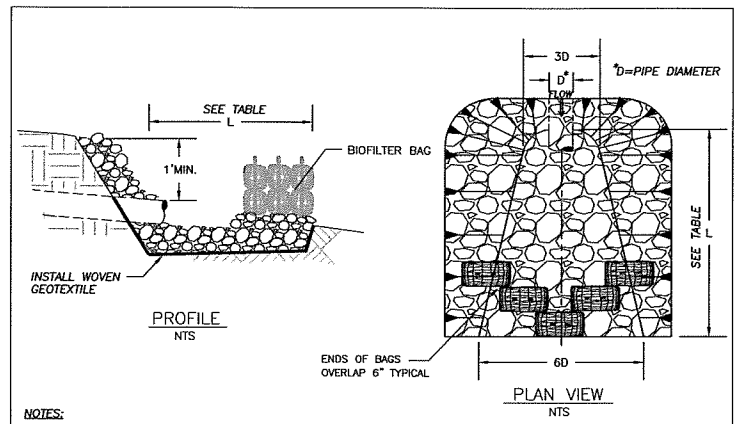

NOTES:

1. BIO-BAGS ONLY REQUIRED WHEN DISCHARGING SEDIMENT LADEN WATER. STAKING OF BAGS REQUIRED WITH EITHER METHOD USING (2) 1"x2" WOOD STAKES OR APPROVED EQUAL PER BAG.

2. RIP-RAP SIZING GOVERNED BY THE SIDE SLOPES ON THE OUTLET CHANNEL, ASSUMED TO BE 3:1.

3. PLACE WOVEN GEOTEXTILE ALONG BOTTOM AND SIDE SLOPES TO CROWN OF PIPE, AND INSTALL ROCK TO 1' ABOVE PIPE CROWN ALONG BOTH SIDES OF CHANNEL.

4. RIP-RAP SHALL BE IN ACCORDANCE WITH SECTION 9-13.1 OF THE WSDOT/APWA STANDARD SPECIFICATIONS. RIP-RAP ROCK SIZE SHALL BE AS SHOWN IN THE TABLE BELOW.

5. RIP-RAP SHALL BE HAND LAID AND REASONABLY GRADED.

6. INSPECT ONCE PER WEEK ON ACTIVE SITES, ONCE EVERY TWO WEEKS ON INACTIVE SITES, AND WITHIN 24 HOURS FOLLOWING A 0.5 INCH RAIN EVENT.

7. IF THERE IS SCOURING AT THE OUTLET, PROTECT THE ERODED AREA BY INCREASING THE SIZE OF THE ENERGY DISSIPATER FACILITY.

8. REMOVE ACCUMULATED SEDIMENT FREQUENTLY.

9. USE STANDARD PLAN FOR OUTLET PROTECTION AS A MINIMUM. CONSIDER SITE CONDITIONS TO DETERMINE IF A MORE COMPLEX ENERGY DISSIPATOR MAY BE REQUIRED.

DISCHARGE VELOCITY AT DESIGN FLOW (FPS)	REQUIRED PROTECTION MINIMUM DIMENSIONS	
	TYPE	LENGTH (L)
0 TO <5	RIP-RAP*	8' OR 3D (WHICHEVER IS GREATER)
6 TO <10	RIP-RAP**	12' OR 4D (WHICHEVER IS GREATER)
11 TO <20	GABION	AS REQUIRED
>20	ENGINEERED ENERGY DISSIPATER REQUIRED	

* 8" MAXIMUM, 6" MEDIAN, 2" MINIMUM
** 24" MAXIMUM, 16" MEDIAN, 4" MINIMUM

DWG: E-7.DWG

NO.	REVISIONS	DATE	BY

Department of Public Works
CLARK COUNTY WASHINGTON
proud past, promising future

OUTLET PROTECTION
RIP-RAP

APPROVED
PETER CAPELLA
COUNTY ENGINEER
01/01/04
DATE

STANDARD
E-7
PLAN No.
DESIGNED SDI
DRAWN SDI
DATE 06/06/02

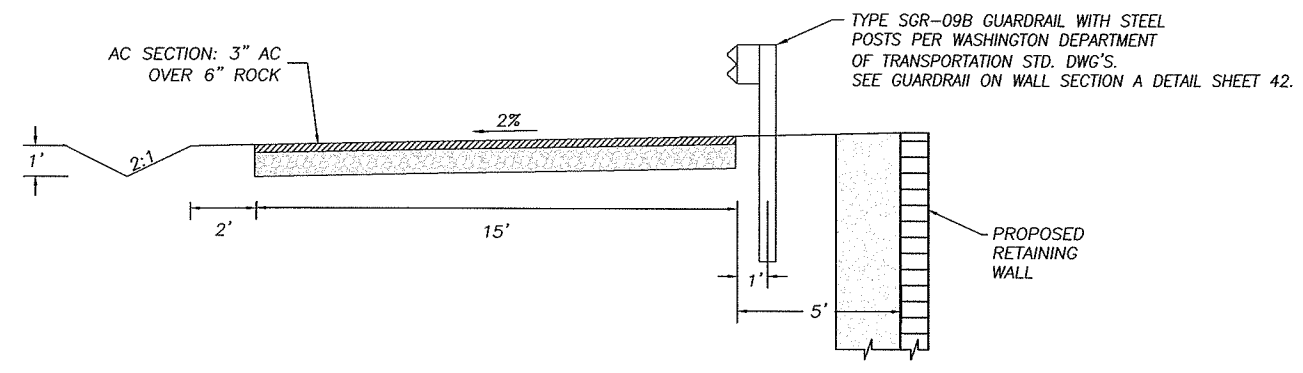

EAST END STORMWATER FACILITY ACCESS ROAD TYPICAL SECTION

N.T.S.

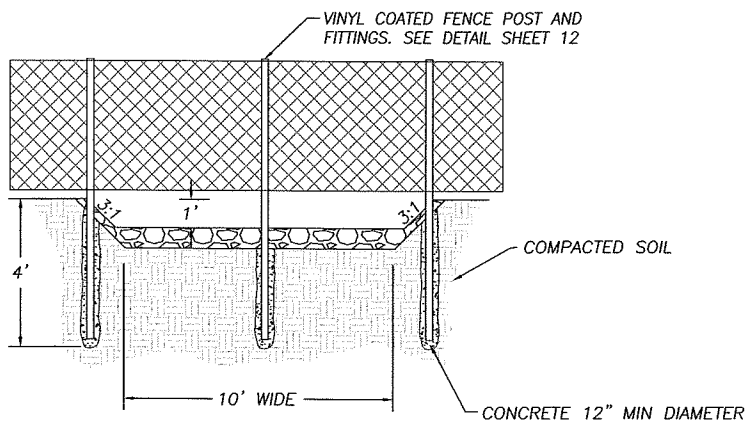

FENCE SPILLWAY CROSSING

N.T.S.

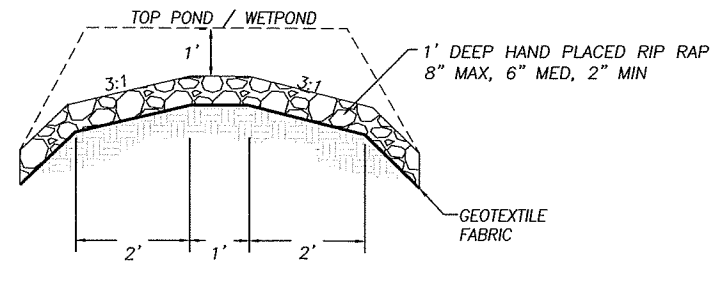

SPILLWAY AND BERM STRUCTURE SECTION VIEW

N.T.S.

FOR INFORMATIONAL PURPOSES ONLY

ALL PLAN DETAIL AND INFORMATION IS NOT SHOWN ON THIS 90% COMPLETED SET OF PLANS.

90% SUBMITTAL - JULY 2004

DESIGNED:	AMR
DRAWN:	AMR
CRP:	330222
HOR.	N/A
VERT.	N/A
DATE:	7/2004
DWG:	
SHEET	35 OF 99

CALL 48 HOURS BEFORE YOU DIG
1-800-553-4344
"It's the Law"
NORTHWEST UTILITIES NOTIFICATION CENTER

Harper Houf Peterson Righellis Inc.
ENGINEERS • PLANNERS • SURVEYORS
1104 MAIN STREET, SUITE 100, VANCOUVER, WA 98660
TEL 360.750.1131 www.hhpr.com FAX 360.750.1141

DESIGN & ENGINEERING DIVISION

NE 88TH STREET
STORMWATER FACILITY DETAILS

proud past, promising future
CLARK COUNTY WASHINGTON

P:\Clk-12 (NE 88th)\CRK12-DWGS\ Clk12-SD05.DWG

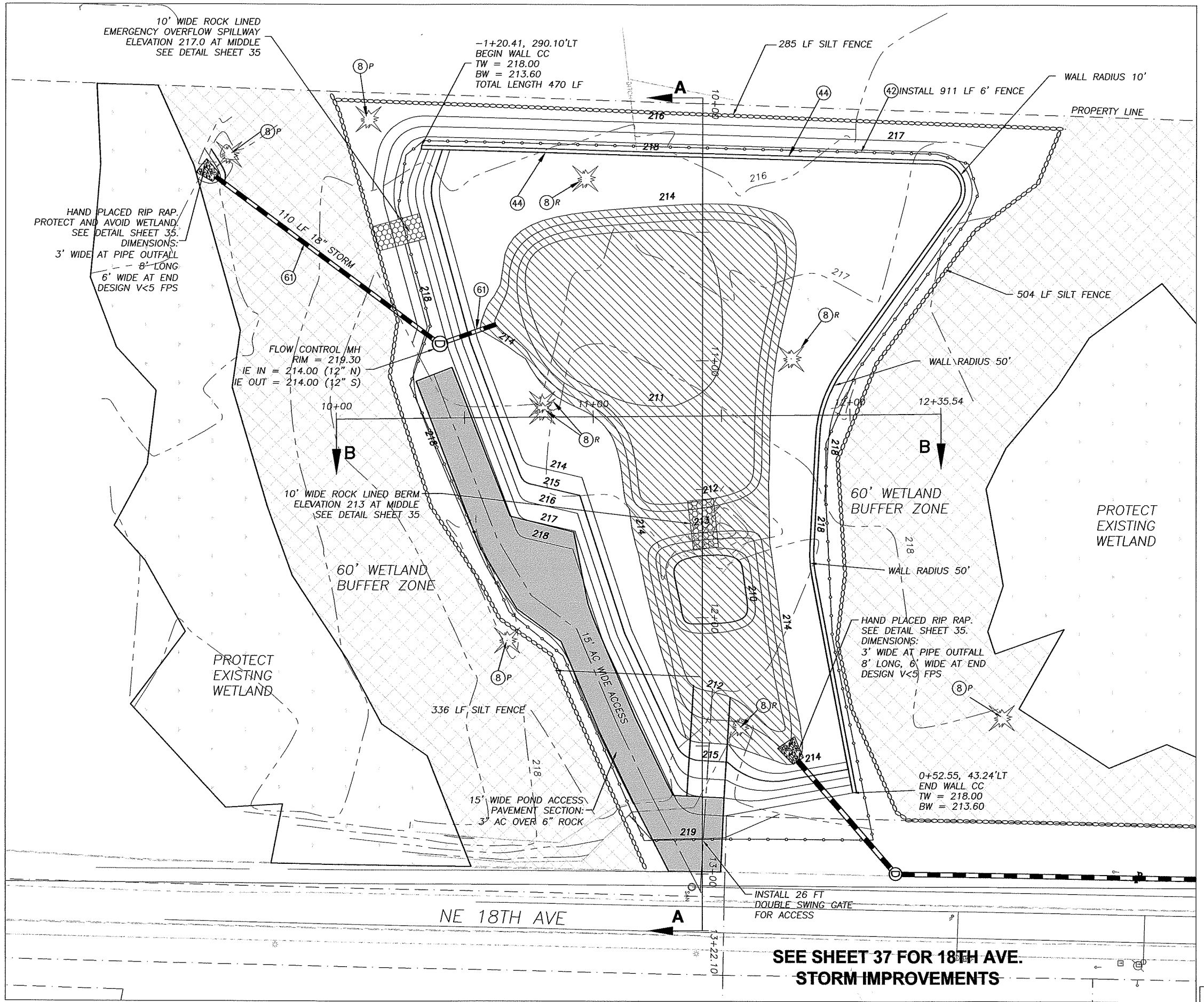

COMBINED WETPOND AND DETENTION FACILITY

SCALE: 1" = 20'

CONSTRUCTION NOTES:

NOTES:
WETLANDS AND WETLAND BUFFERS SHALL BE CLEARLY MARKED BEFORE START OF CONSTRUCTION.

SILT FENCE SHALL BE INSTALLED ENTIRE LENGTH OF WETLAND BUFFERS AND SHALL REMAIN UNTIL ESTABLISHMENT OF VEGETATION.

WET POOL AREA SHALL BE LINED WITH IMPERVIOUS GEOFABRIC.

ENTIRE POND TO BE ENCIRCLED WITH CHAIN LINK FENCE PER COUNTY STANDARDS.

(8) REMOVE (R), PROTECT (P), OR TRIM (T) EXISTING SHRUB OR TREE AS SHOWN ON THE PLANS OR AS DIRECTED.

(42) INSTALL FENCE AT LOCATIONS NOTED ON THE PLANS OR AS DIRECTED IN THE FIELD. SEE TYPICAL SECTION ON SHEET 12.

(44) CONSTRUCT RETAINING WALL PER PLAN AND PROFILE ON SHEET 42 TO 56. SEE TYPICAL DETAILS ON SHEET 40 AND 41.

(61) INSTALL STORM PIPE PER INFORMATION ON PLAN AND PROFILE.

TREATMENT WETPOND

WETLAND BUFFER

WETLAND

PROPOSED AC

0 10 20 40
SCALE: 1" = 20'

ORIFICE	DIA.	ELEV.
1	1"	214.00
2	2.5"	216.10
OVERFLOW	12"	216.87

SEE SHEET 36A FOR SECTIONS

FOR INFORMATIONAL PURPOSES ONLY
ALL PLAN DETAIL AND INFORMATION IS NOT SHOWN ON THIS 90% COMPLETED SET OF PLANS.
90% SUBMITTAL - JULY 2004

DESIGNED: AMR
DRAWN: AMR
CRP: 330222
HOR. 1" = 20'
VERT. 1" = 5'
DATE: 7/2004
DWG:
SHEET 36 OF 99

CALL 48 HOURS BEFORE YOU DIG
1-800-553-4344
"It's the Law"
NORTHWEST UTILITIES NOTIFICATION CENTER

Harper Houf Peterson Righellis Inc.
ENGINEERS • PLANNERS • SURVEYORS
1104 MAIN STREET, SUITE 100, VANCOUVER, WA 98660
TEL 360.750.1131 www.hhpr.com FAX 360.750.1141

DESIGN & ENGINEERING DIVISION

NE 88TH STREET
18TH AVE STORMWATER FACILITY
PLAN VIEW

proud past, promising future
CLARK COUNTY WASHINGTON

P:\Clk-12 (NE 88th)\CRK12-DWGS\ Crk12-SD01.DWG

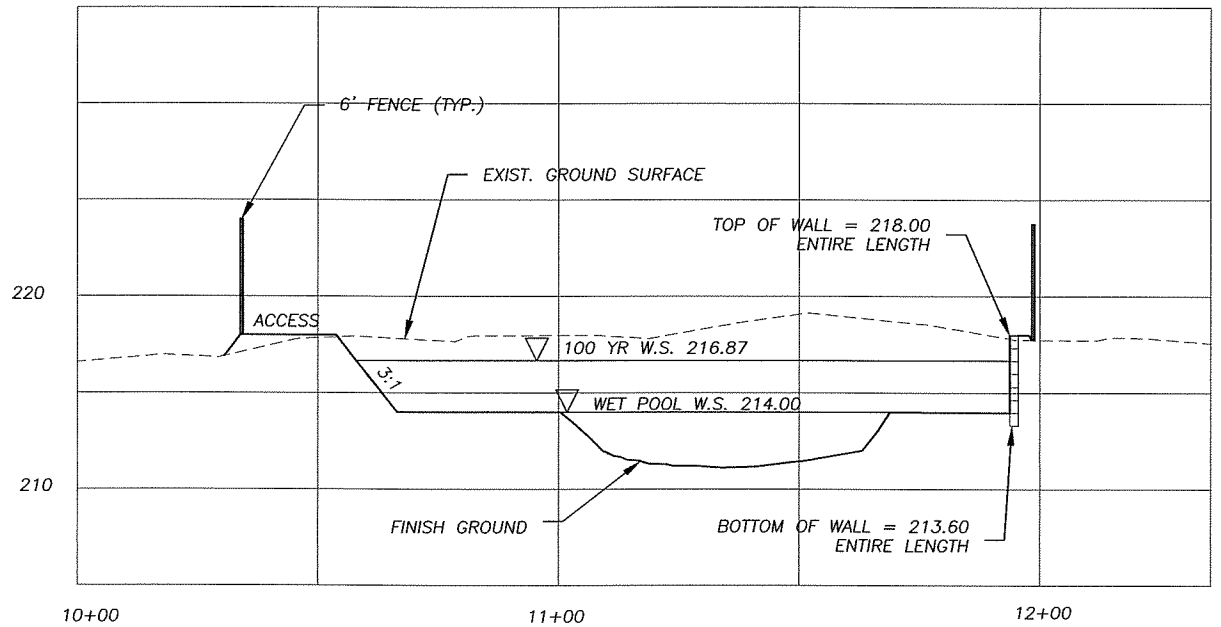

SECTION B-B

SCALE: 1" = 20' HORIZONTAL
1" = 5' VERTICAL

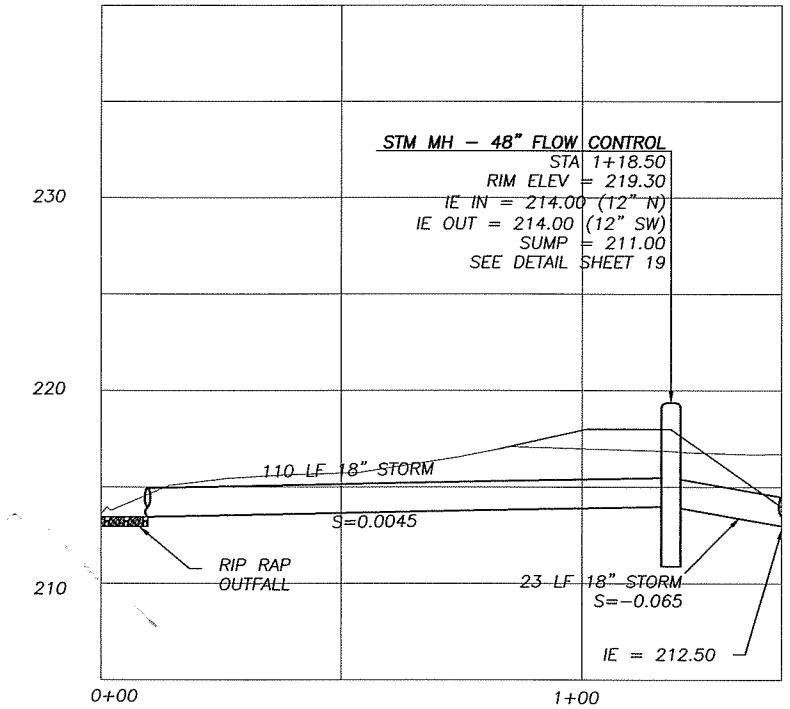

POND OUTFALL PROFILE

SCALE: 1" = 20' HORIZONTAL
1" = 5' VERTICAL

CONSTRUCTION NOTES:

NOTES:
WETLANDS AND WETLAND BUFFERS SHALL BE CLEARLY MARKED BEFORE START OF CONSTRUCTION.

SILT FENCE SHALL BE INSTALLED ENTIRE LENGTH OF WETLAND BUFFERS AND SHALL REMAIN UNTIL ESTABLISHMENT OF VEGETATION.

WET POOL AREA SHALL BE LINED WITH IMPERVIOUS GEOFABRIC.

ENTIRE POND TO BE ENCIRCLED WITH CHAIN LINK FENCE PER COUNTY STANDARDS.

SEE SHEET 36 FOR PLAN VIEW

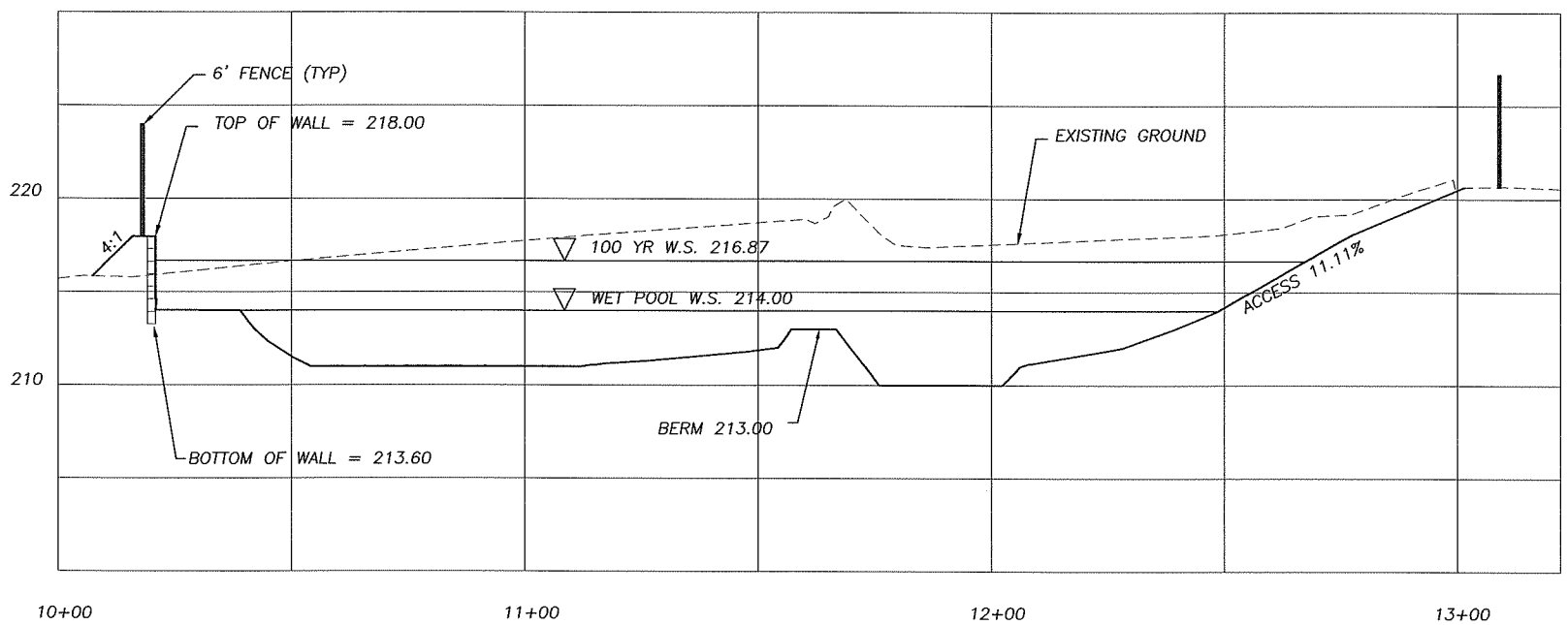

SECTION A-A

SCALE: 1" = 20' HORIZONTAL
1" = 5' VERTICAL

FOR INFORMATIONAL PURPOSES ONLY
ALL PLAN DETAIL AND INFORMATION IS NOT SHOWN ON THIS 90% COMPLETED SET OF PLANS.
90% SUBMITTAL - JULY 2004

DESIGNED:	AMR
DRAWN:	AMR
CRP:	330222
HOR.	1" = 20'
VERT.	1" = 5'
DATE:	7/2004
DWG:	
SHEET	36A OF 99

CALL 48 HOURS BEFORE YOU DIG
1-800-553-4344
"It's the Law"
NORTHWEST UTILITIES NOTIFICATION CENTER

Harper Houf Peterson Righellis Inc.
ENGINEERS • PLANNERS • SURVEYORS
1104 MAIN STREET, SUITE 100, VANCOUVER, WA 98660
TEL 360.750.1141 www.hhpr.com FAX 360.750.1141

DESIGN & ENGINEERING DIVISION

NE 88TH STREET
18TH AVE STORMWATER FACILITY
POND SECTIONS

proud past, promising future
CLARK COUNTY WASHINGTON

P:\Crk-12 (NE 88th)\CRK12-DWGS\ Crk12-SD01.DWG

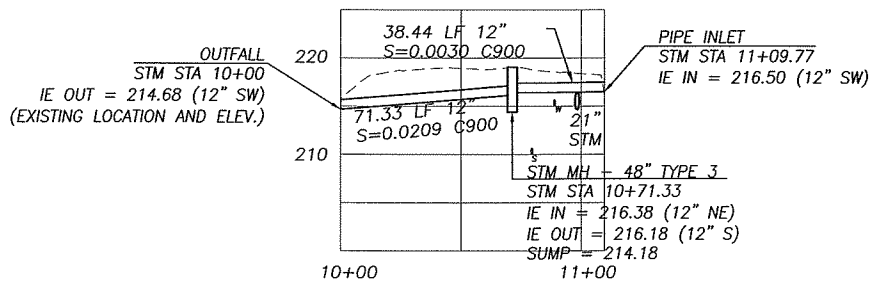

DITCH OUTFALL PROFILE

SCALE: 1" = 40' HORIZONTAL
1" = 10' VERTICAL

CONSTRUCTION NOTES:

(13) EXISTING UTILITY POLE, LIGHT POLE, AND/OR GUY WIRE TO BE RELOCATED (R) BY OTHERS OR PROTECTED (P). COORDINATE WITH APPROPRIATE UTILITY.

(56) CONSTRUCT STD. FLAT TOP STORM MANHOLE, TYPE 3, WITH STANDARD MANHOLE RING AND COVER PER DETAIL SHEET 17.

(56)SU CONSTRUCT STD. FLAT TOP STORM MANHOLE, TYPE 3, WITH SUBURBAN MANHOLE RING AND COVER PER DETAIL SHEET 17.

(61) INSTALL STORM PIPE PER INFORMATION ON PLAN AND PROFILE.

(63) REMOVE EXISTING STORM SEWER PIPE AND/OR STRUCTURES. BACKFILL AND COMPACT VOID LEFT FROM EXISTING PIPE AS NECESSARY.

(65) PLUG AND ABANDON EXISTING STORM PIPE.

(80) RELOCATE (R), PROTECT (P) ADJUST (A) EXISTING SANITARY SEWER CLEANOUT, WATER VALVE OR WATER METER BOX AND/OR SERVICE AS REQUIRED AND DIRECTED. ALL DISTURBED SERVICE LINES SHALL BE REPAIRED AS REQUIRED.

EROSION CONTROL NOTES:

(A) INSTALL CONSTRUCTION GEOTEXTILE FOR SILT FENCE PER EROSION CONTROL DETAIL 'A'.

(F) INSTALL STORM DRAIN INLET PROTECTION PER EROSION CONTROL DETAIL 'F'.

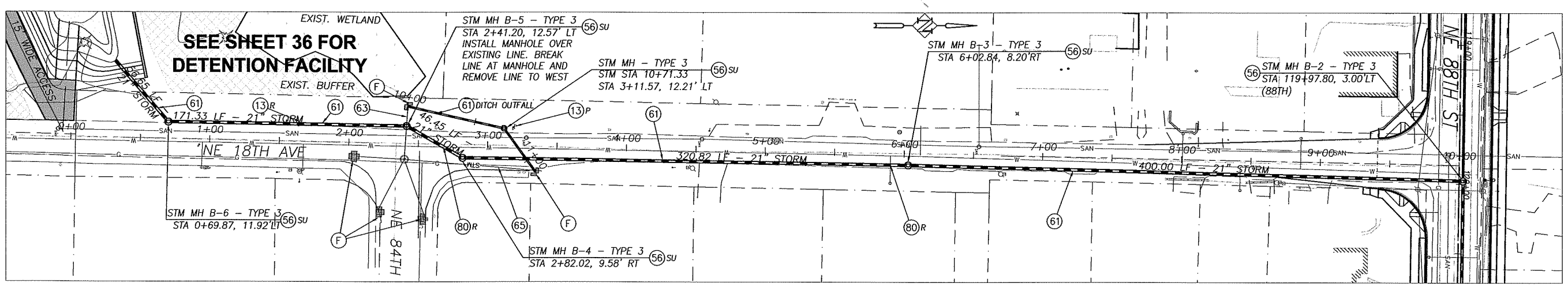

18TH AVE PLAN

SCALE: 1" = 40'

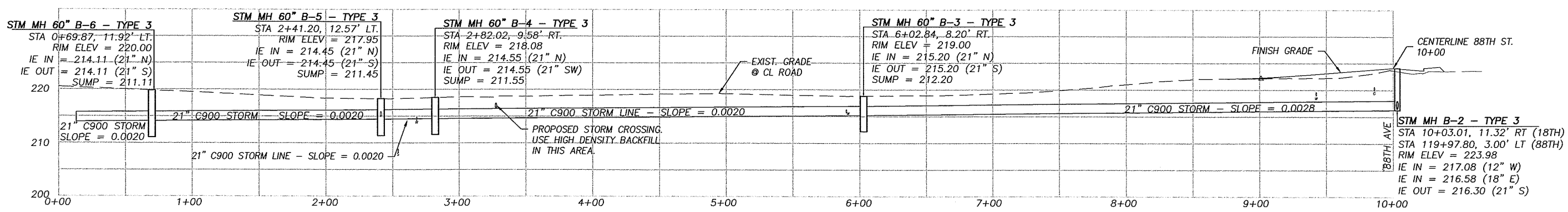

18TH AVE PROFILE

SCALE: 1" = 40' HORIZONTAL
1" = 10' VERTICAL

FOR INFORMATIONAL PURPOSES ONLY

ALL PLAN DETAIL AND INFORMATION IS NOT SHOWN ON THIS 90% COMPLETED SET OF PLANS.

90% SUBMITTAL - JULY 2004

DESIGNED:	AMR
DRAWN:	AMR
CRP:	330222
HOR.	1" = 40'
VERT.	1" = 10'
DATE:	7/2004
DWG:	
SHEET	37 OF 99

CALL 48 HOURS BEFORE YOU DIG 1-800-553-4344 "It's the Law" NORTHWEST UTILITIES NOTIFICATION CENTER

Harper Houf Peterson Righellis Inc.
ENGINEERS • PLANNERS • SURVEYORS
1104 MAIN STREET, SUITE 100, VANCOUVER, WA 98660
TEL 360.750.1131 www.hhpr.com FAX 360.750.1141

DESIGN & ENGINEERING DIVISION

NE 88TH STREET
18TH AVE STORM SEWER

proud past, promising future
CLARK COUNTY WASHINGTON

BLORK12-D:\WGSL C4.12-SD02.dwg

ORIFICE	DIA	ELEV
1	0.5 IN	233.00
2	0.5 IN	237.10
OVERFLOW	12 IN	238.76

SEE SHEET 19 FOR FLOW CONTROL MANHOL DETAILS 8-1 AND 8-2

MH C-3 FLOW CONTROL MANHOLE MULTI-STAGE ORIFICE INFORMATION

GENERAL NOTES

1.) STORMFILTER BY STORMWATER MANAGEMENT, PORTLAND, OREGON (503-240-3393).
2.) ALL STORMFILTERS REQUIRE REGULAR MAINTENANCE. REFER TO OPERATION AND MAINTENANCE GUIDELINES FOR DETAILS.
3.) PRECAST CONCRETE VAULT TO BE CONSTRUCTED IN ACCORDANCE WITH ASTM C858.
4.) INLET AND OUTLET PIPING TO BE SPECIFIED BY ENGINEER AND PROVIDED BY CONTRACTOR.
5.) ANTI-FLOATATION BALLAST TO BE SPECIFIED BY ENGINEER. BALLAST TO BE SET ALONG ENTIRE LENGTH OF BOTH SIDES OF VAULT. BALLAST MATERIALS TO BE PROVIDED BY CONTRACTOR.
6.) PRECAST STORMFILTER EQUIPPED WITH KNOCKOUTS AT ALT. INLET/OUTLET LOCATIONS. CORINGS AVAILABLE WHEN SPECIFIED.
7.) DETAIL REFLECTS DESIGN INTENT ONLY. ACTUAL VAULT DIMENSIONS AND CONFIGURATION WILL BE SHOWN ON THE PRODUCTION SHOP DRAWING.

6' X 12' PRECAST STORMFILTER™ DATA

DESIGN WATER QUALITY FLOW (cfs)			0.22
PEAK FLOW (cfs)			3.29
RETURN PERIOD OF PEAK FLOW (yrs)			10
# OF CARTRIDGES REQUIRED			7
MEDIA TYPE			PERLITE
(In-Out)=2.3' Min.	I.E.	MATERIAL	DIAMETER
INLET PIPE #1	237.76	ADS	12"
INLET PIPE #2			
OUTLET PIPE	235.46	ADS	12"

NOTES/SPECIAL REQUIREMENTS:

RIM ELEVATION(S): 1 = 2 = 3 = 4 =

DOOR OPENING DIRECTION: (FACING DOWNSTREAM – SEE FIGURE ABOVE) EXAMPLE: '2 TO 1' OR '1 TO 2.'

ADJUSTABLE LID		YES/NO
LADDER		YES/NO
ANTI-FLOATATION BALLAST (USE N/A IF NOT REQUIRED)	WIDTH	HEIGHT

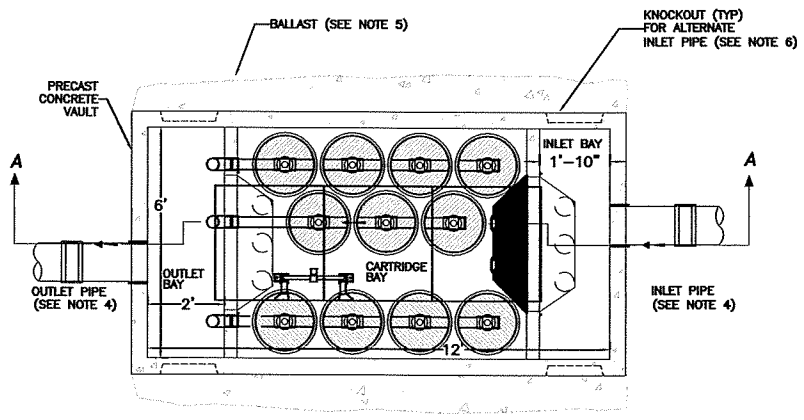

6'x12' PRECAST STORMFILTER™ – PLAN VIEW (1/1)
SCALE: N.T.S

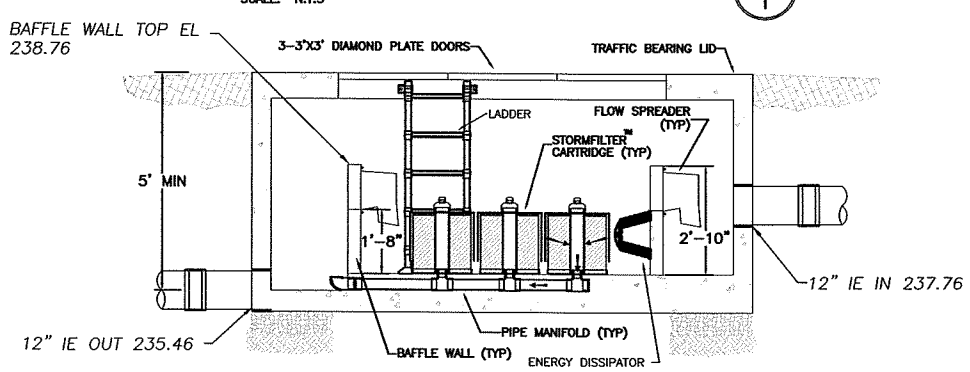

6'x12' PRECAST STORMFILTER™ – SECTION A-A (A-A/1)
SCALE: N.T.S

The STORMWATER MANAGEMENT StormFilter U.S. PATENT No. 5,522,652, No. 5,624,576, No. 5,707,527 AND OTHER U.S. AND FOREIGN PATENTS PENDING

SHEET	DESIGNED BY: JJL	CHECKED BY:	CHECK DATE:
1/1	DRAWN BY: JRO	APPROVED BY:	APPR. DATE:
1	REV.	DESCRIPTION	BY	CHK.	APPR.
	01/09/01	JRO	ISSUED FOR REVIEW		

6'X12' PRECAST STORMFILTER PLAN AND SECTION VIEW STANDARD DETAIL

SCALE: AS SHOWN | PROJECT NO. | DRAWING FILE NAME: 612.DWG

STORMWATER MANAGEMENT INC.

LAST REV. ARC PLOT DATE: 04/19/01

P:\Clc12 INE 88th\CRK12-PW\BSL C\K12-SD03.DWG

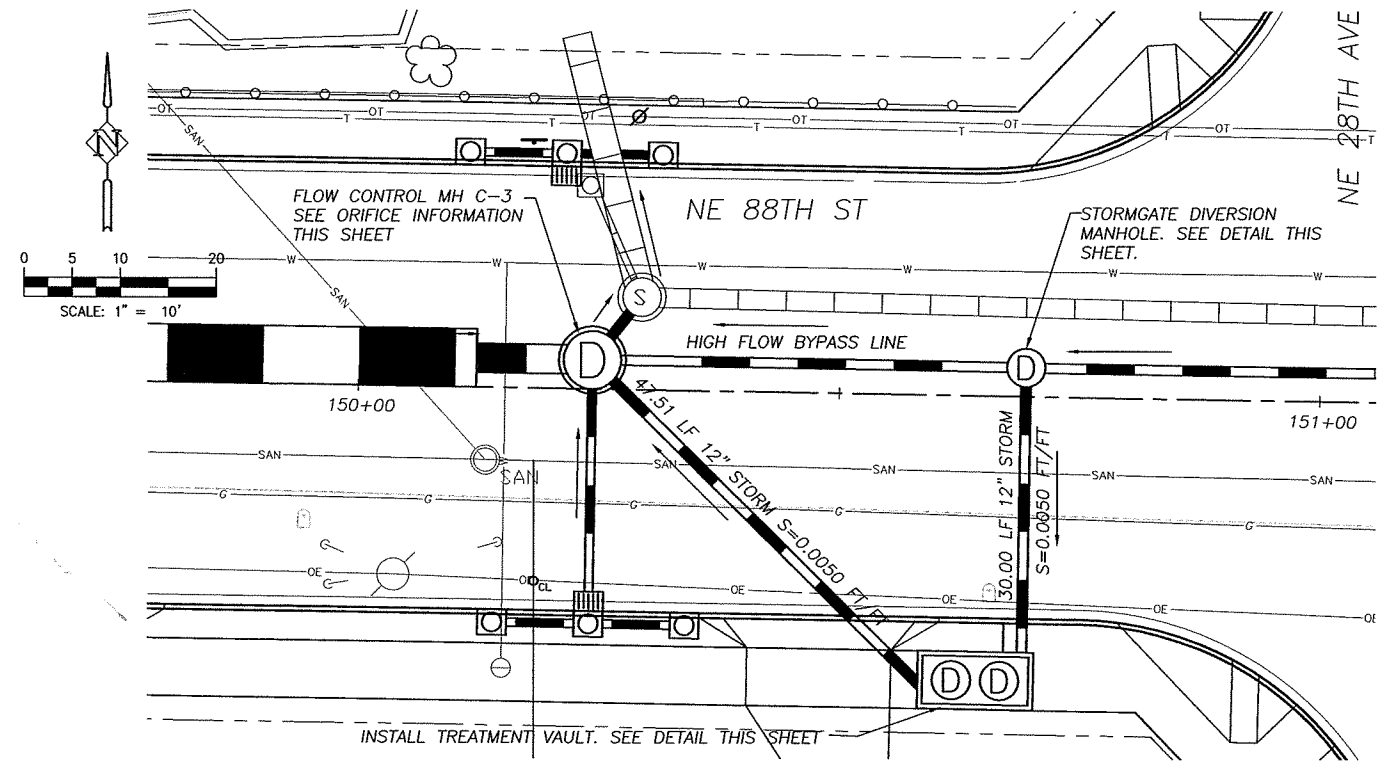

TREATMENT VAULT PLAN

SCALE 1" = 10'

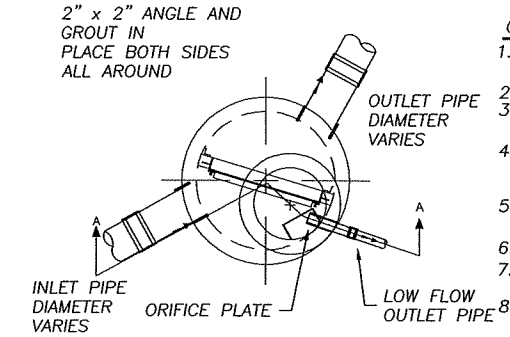

THE STORMGATE™ – PLAN VIEW (1/1)
SCALE: N.T.S

GENERAL NOTES:

1.) STORMGATE BY STORMWATER MANAGEMENT, INC., PORTLAND, OREGON (800-548-4667).
2.) ALL WATER QUALITY FACILITIES REQUIRE REGULAR MAINTENANCE.
3.) MINIMUM ANNUAL MAINTENANCE INCLUDES INSPECTION OF COMPONENTS AND REMOVAL OF SEDIMENTS. FOLLOW ALL LOCAL, 4.) STATE, & FEDERAL SAFETY GUIDELINES. PRECAST CONCRETE MANHOLE CONSTRUCTED IN ACCORANCE WITH ASTM C858.
5.) EXTERNAL PIPING AND COUPLINGS PROVIDED BY OTHERS. FLEXIBLE COUPLINGS TO BE SET 18" OUTSIDE FACE OF WALL.
6.) FERNCO OR ENGINEER APPROVED.
7.) SEE PRECAST STORMGATE DATA BLOCK FOR MANHOLE SIZE AND WEIR SETTING.
8.) CONTRACTOR TO ADJUST WEIR TO DESIGN ELEVATION. WHEN SETTING SCREWS ON WEIR PLATE DO NOT EXCEED 5.0 FT-LBS TOURQUE.
9.) SEAL WEIR WITH SILICONE SEALANT AFTER FINAL ADJUSTMENT.

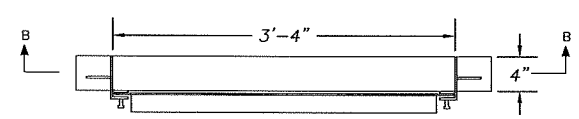

THE STORMGATE™ WEIR DETAIL-PLAN VIEW (2/1)
SCALE: N.T.S.

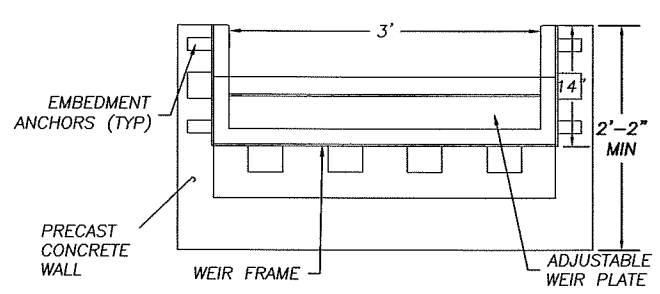

THE STORMGATE™ WEIR DETAIL-SECTION VIEW (B-B/1)
SCALE: N.T.S

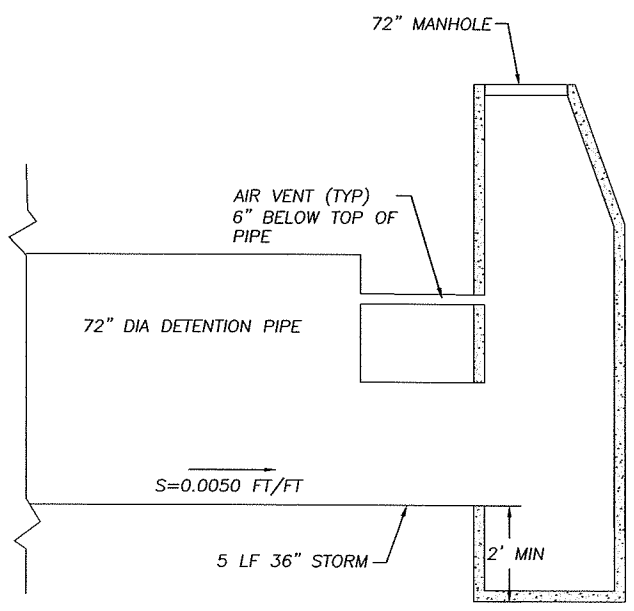

DETENTION PIPE TYPICAL MANHOLE CONNECTION DETAIL

N.T.S.

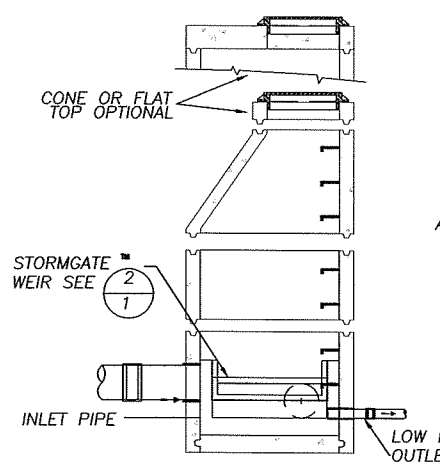

THE STORMGATE™ – SECTION VIEW (A-A/1)
SCALE: N.T.S

FOR INFORMATIONAL PURPOSES ONLY

ALL PLAN DETAIL AND INFORMATION IS NOT SHOWN ON THIS 90% COMPLETED SET OF PLANS.

90% SUBMITTAL - JULY 2004

DESIGNED:	AMR
DRAWN:	AMR
CRP:	330222
HOR.	N/A
VERT.	N/A
DATE:	7/2004
DWG:	
SHEET	38 OF 99

CALL 48 HOURS BEFORE YOU DIG 1-800-553-4344 "It's the Law" NORTHWEST UTILITIES NOTIFICATION CENTER

Harper Houf Peterson Righellis Inc.
ENGINEERS · PLANNERS · SURVEYORS
1104 MAIN STREET, SUITE 100, VANCOUVER, WA 98660
TEL 360.750.1131 www.hhpr.com FAX 360.750.1141

DESIGN & ENGINEERING DIVISION

NE 88TH STREET DETENTION PIPE/TREATMENT

proud past, promising future

CLARK COUNTY WASHINGTON

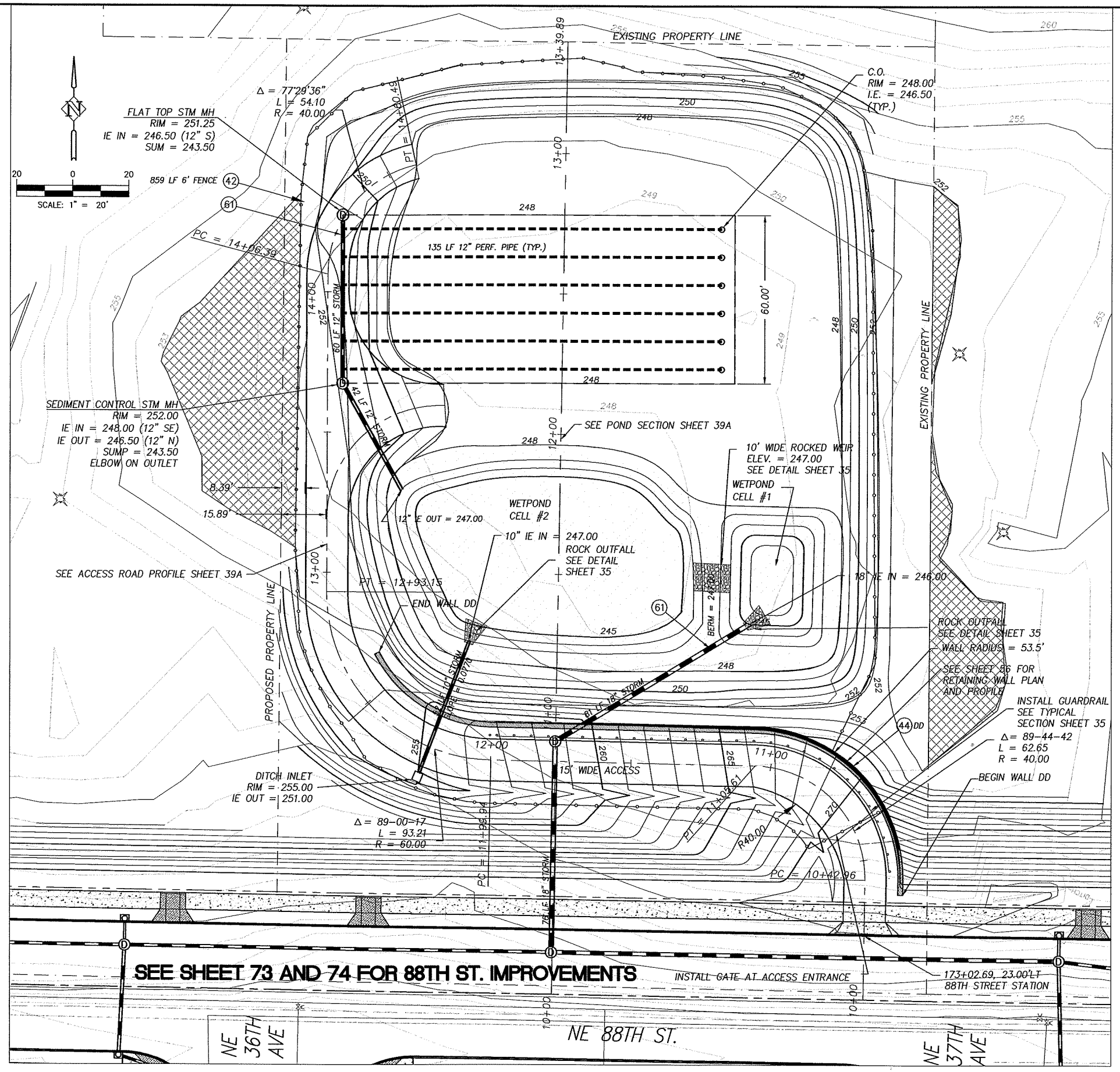

COMBINED DETENTION AND WETPOND AND INFILTRATION FACILITY

SCALE: 1" = 20'

CONSTRUCTION NOTES:

NOTES:
WET POND TO BE LINED WITH IMPERVIOUS GEOFABRIC.

(42) INSTALL FENCE AT LOCATIONS NOTED ON THE PLANS OR AS DIRECTED IN THE FIELD. SEE TYPICAL SECTION ON SHEET 12.
(44) CONSTRUCT RETAINING WALL PER PLAN AND PROFILE ON SHEET 42 TO 56. SEE TYPICAL DETAILS ON SHEETS 40 AND 41.
(53) CONSTRUCT STD. SEDIMENTATION MANHOLE WITH STANDARD MANHOLE RING AND COVER PER DETAIL SHEET 53.
(56) CONSTRUCT STD. FLAT TOP STORM MANHOLE, TYPE 3 WITH STANDARD MANHOLE RING AND COVER PER DETAIL SHEET 17
(61) INSTALL STORM PIPE PER INFORMATION ON PLAN AND PROFILE.

WET POND TREATMENT AREA

AREA TO BE FILLED ON ADJACENT PROPERTIES

FOR INFORMATIONAL PURPOSES ONLY
ALL PLAN DETAIL AND INFORMATION IS NOT SHOWN ON THIS 90% COMPLETED SET OF PLANS.
90% SUBMITTAL - JULY 2004

DESIGNED: AMR
DRAWN: AMR
CRP: 330222
HOR. 1" = 20'
VERT. N/A
DATE: 7/2004
DWG:
SHEET 39 OF 99

CALL 48 HOURS BEFORE YOU DIG
1-800-553-4344
"It's the Law"
NORTHWEST UTILITIES NOTIFICATION CENTER

Harper Houf Peterson Righellis Inc.
ENGINEERS · PLANNERS · SURVEYORS
1104 MAIN STREET, SUITE 100, VANCOUVER, WA 98660
TEL 360.750.1131 www.hhpr.com FAX 360.750.1141

DESIGN & ENGINEERING DIVISION

NE 88TH STREET
36TH/37TH AVE. EAST FACILITY

proud past, promising future
CLARK COUNTY WASHINGTON

P:\Crk-12 (NE 88th)\CRK12-DWGS\ Crk12-SD04.dwg

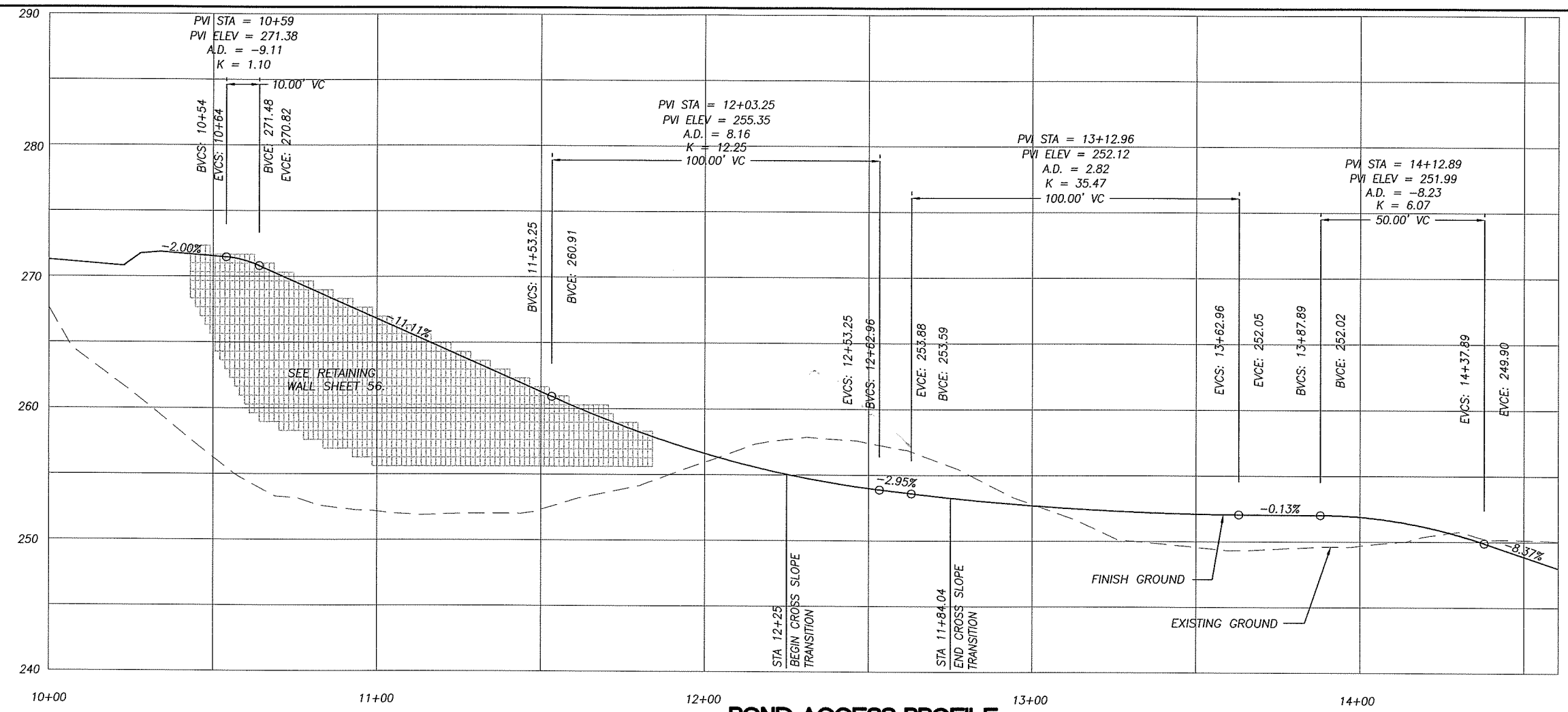

POND ACCESS PROFILE

SCALE: 1" = 40' HORIZONTAL
1" = 10' VERTICAL

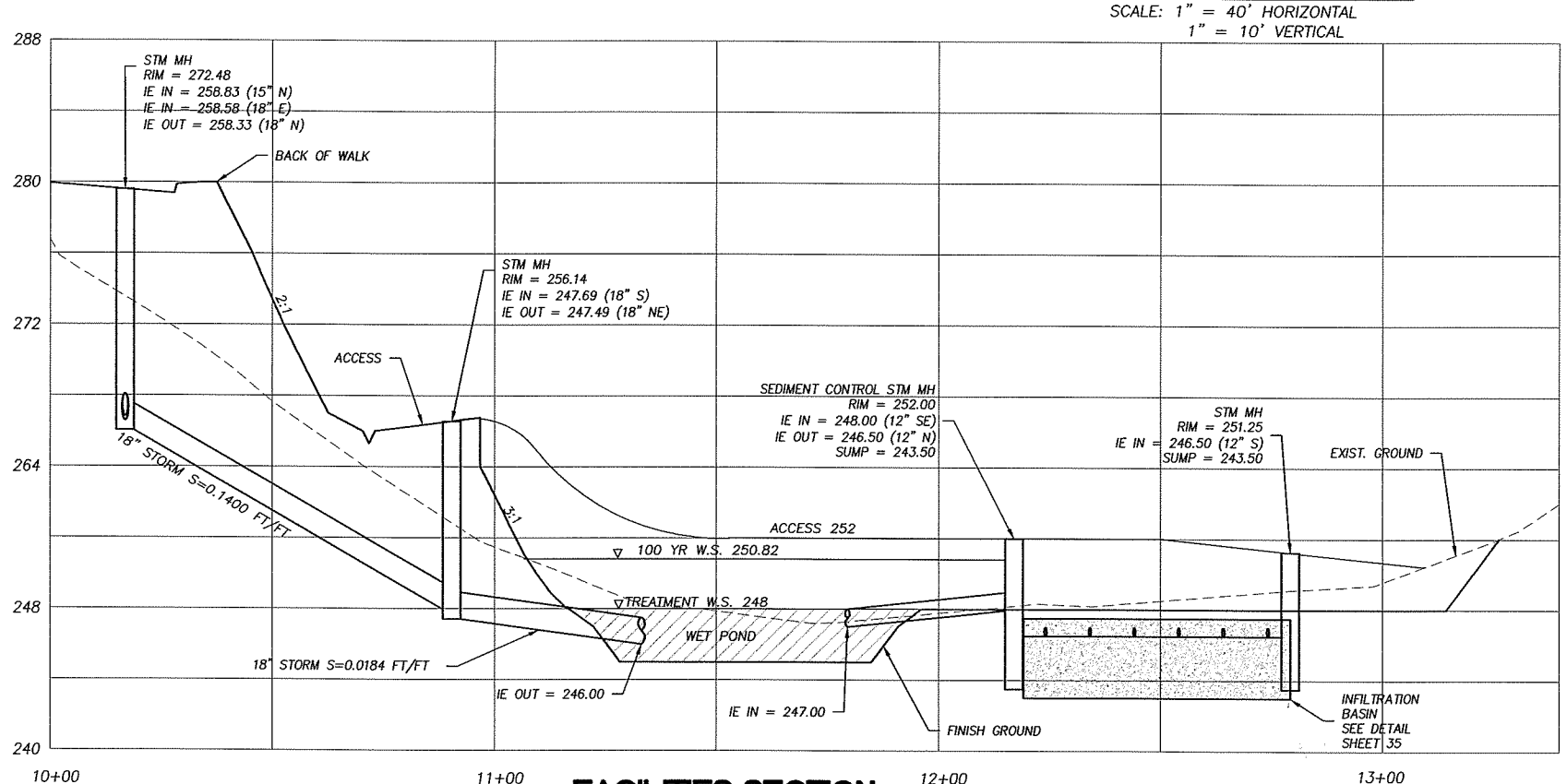

FACILITIES SECTION

SCALE: 1" = 40' HORIZONTAL
1" = 10' VERTICAL

FOR INFORMATIONAL PURPOSES ONLY
ALL PLAN DETAIL AND INFORMATION IS NOT SHOWN ON THIS 90% COMPLETED SET OF PLANS.
90% SUBMITTAL - JULY 2004

DESIGNED:	AMR
DRAWN:	AMR
CRP:	330222
HOR.	1" = 20'
VERT.	N/A
DATE:	7/2004
DWG:	
SHEET	39A OF 99

CALL 48 HOURS BEFORE YOU DIG 1-800-553-4344 "It's the Law" NORTHWEST UTILITIES NOTIFICATION CENTER

Harper Houf Peterson Righellis Inc.
ENGINEERS - PLANNERS - SURVEYORS
1104 MAIN STREET, SUITE 100, VANCOUVER, WA 98660
TEL 360.750.1131 www.hhpr.com FAX 360.750.1141

DESIGN & ENGINEERING DIVISION

NE 88TH STREET
36TH/37TH AVE. EAST FACILITY
PROFILE AND SECTION

proud past, promising future
CLARK COUNTY WASHINGTON

P:\Ck-12 (NE 88th)\CRK12-DWGS\ Ck12-SD04.dwg

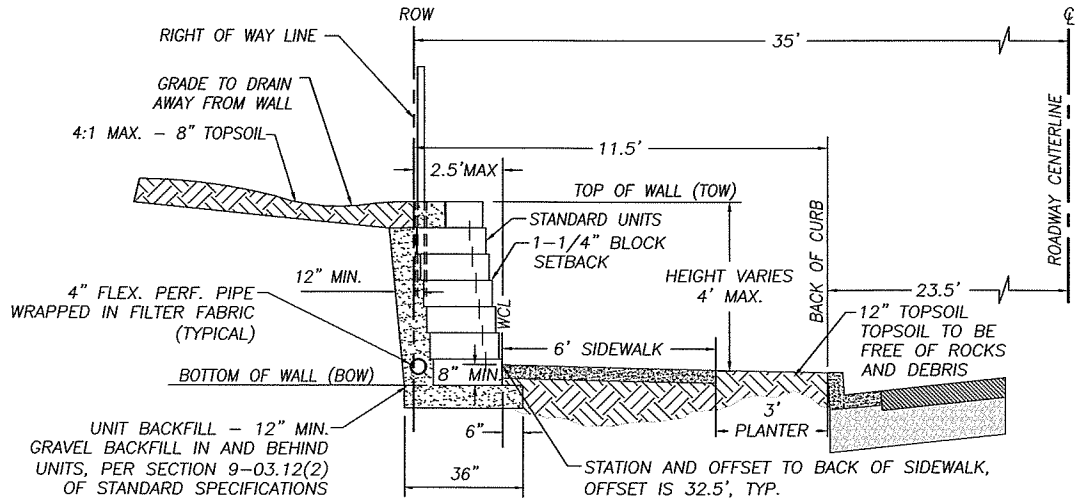

TYPE 1 TYPICAL SECTION

N.T.S.

GRAVITY CUT WALL LESS THAN 4 FEET
SEE PLAN AND PROFILE SHEETS FOR WALL DATA

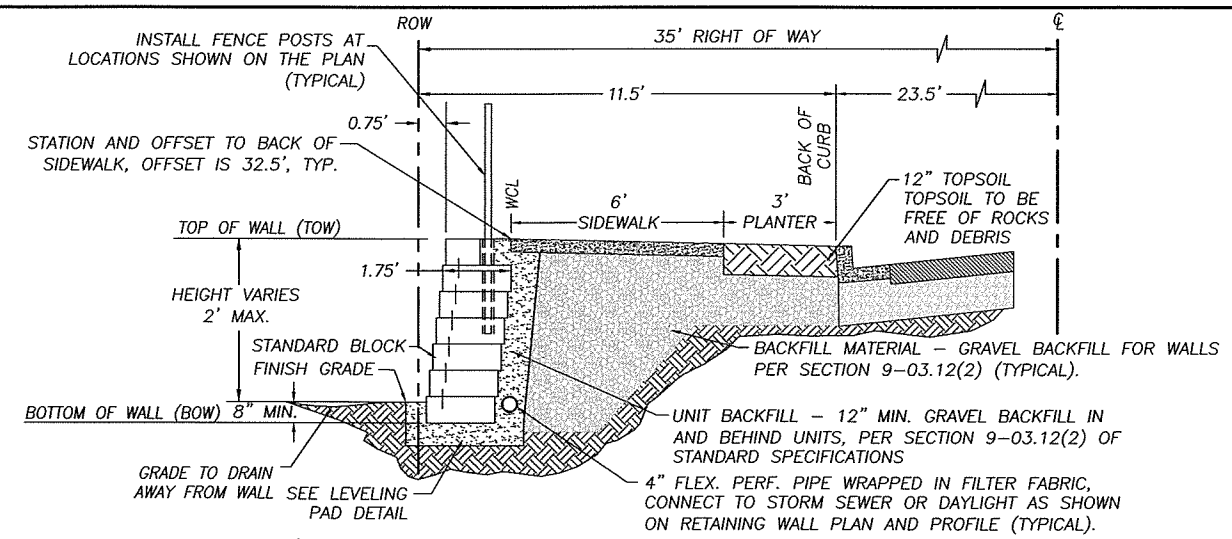

TYPE 3 TYPICAL SECTION

N.T.S.

GRAVITY FILL WALL LESS THAN 2'
SEE PLAN AND PROFILE SHEETS FOR WALL DATA

ABBREVIATIONS:

WCL = WALL CONTROL LINE
BOW = BOTTOM OF WALL
ROW = RIGHT–OF–WAY
CIP = CAST–IN–PLACE
CSBC = CRUSHED SURFACING BASE COURSE

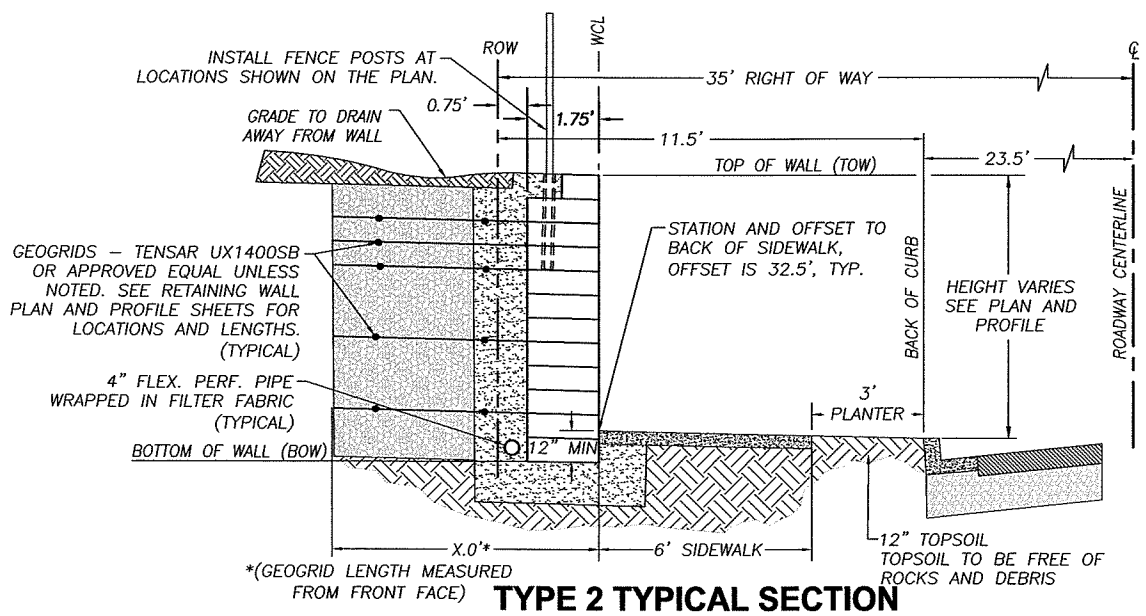

TYPE 2 TYPICAL SECTION

N.T.S.

VERTICAL CUT WALL OVER 5 FEET TALL
SEE PLAN AND PROFILE SHEETS FOR WALL DATA

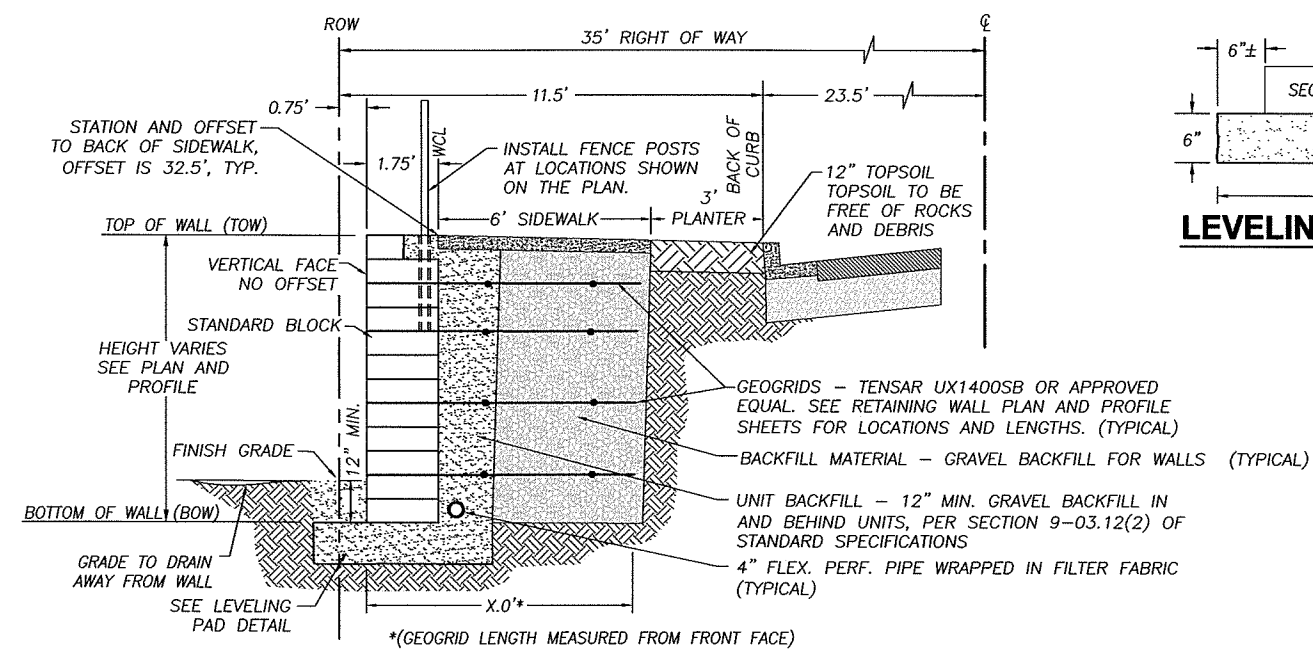

TYPE 4 TYPICAL SECTION

N.T.S.

VERTICAL FILL WALL GREATER THAN 5'
SEE PLAN AND PROFILE SHEETS FOR WALL DATA

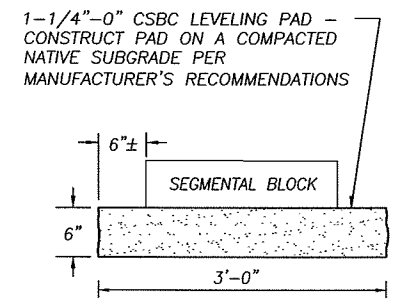

LEVELING PAD DETAIL

N.T.S.

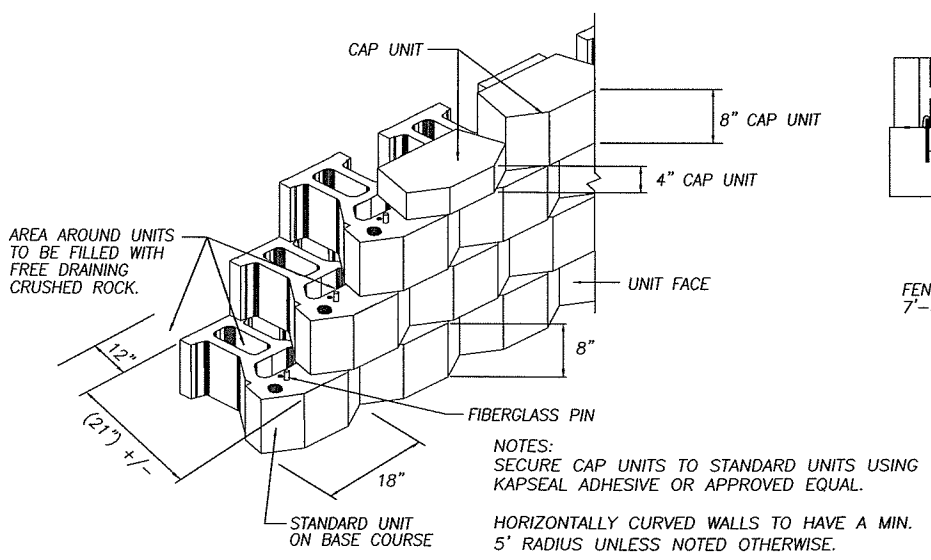

NOTES:
SECURE CAP UNITS TO STANDARD UNITS USING KAPSEAL ADHESIVE OR APPROVED EQUAL.

HORIZONTALLY CURVED WALLS TO HAVE A MIN. 5' RADIUS UNLESS NOTED OTHERWISE.

SEGMENTAL BLOCK RETAINING WALL TYPICAL STANDARD UNITS

N.T.S.

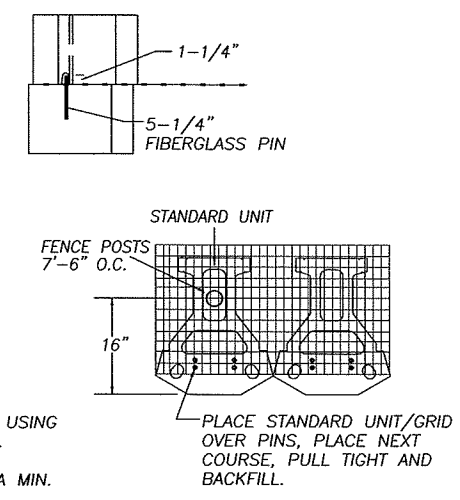

PIN CONNECTION DETAIL

N.T.S.

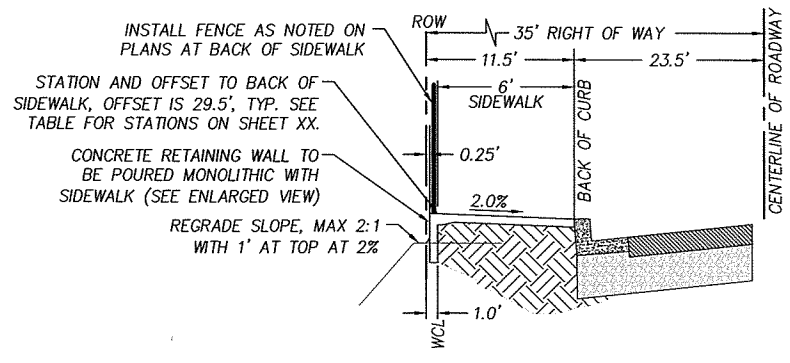

TYPE 5 TYPICAL SECTION

N.T.S.

CIP FILL WALL LESS THAN 2'
SEE SHEET XX FOR PLAN AND PROFILE

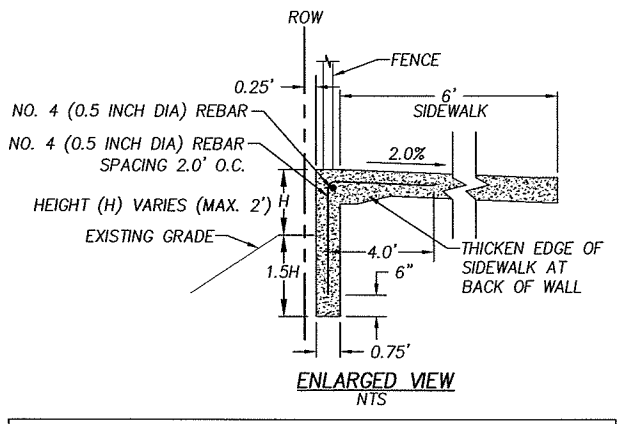

ENLARGED VIEW
NTS

FOR INFORMATIONAL PURPOSES ONLY

ALL PLAN DETAIL AND INFORMATION IS NOT SHOWN ON THIS 90% COMPLETED SET OF PLANS.

90% SUBMITTAL - JULY 2004

DESIGNED:	TSH
DRAWN:	RAF
CRP:	330222
HOR.	1" = 60'
VERT.	N/A
DATE:	7/2004
DWG:	
SHEET	40 OF 99

CALL 48 HOURS BEFORE YOU DIG 1–800–553–4344 "It's the Law" NORTHWEST UTILITIES NOTIFICATION CENTER

Harper Houf Peterson Righellis Inc.
ENGINEERS · PLANNERS · SURVEYORS
1104 MAIN STREET, SUITE 100, VANCOUVER, WA 98660
TEL 360.750.1131 www.hhpr.com FAX 360.750.1141

DESIGN & ENGINEERING DIVISION

NE 88TH STREET RETAINING WALL SECTIONS

proud past, promising future

CLARK COUNTY WASHINGTON

P:\Clrk-12 (NE 88th)\CRK12-DWGS\ Clrk12-DT05.DWG

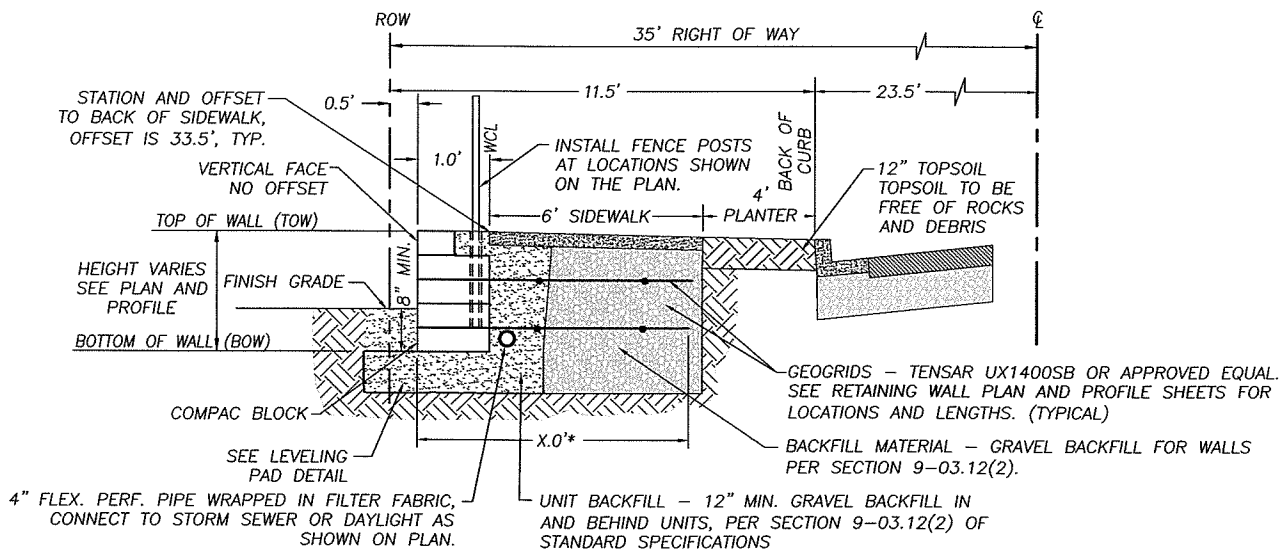

*(GEOGRID LENGTH MEASURED FROM FRONT FACE)

TYPE 6 TYPICAL SECTION

N.T.S.

VERTICAL FILL WALL LESS THAN 5'
SEE PLAN AND PROFILE SHEETS FOR WALL DATA

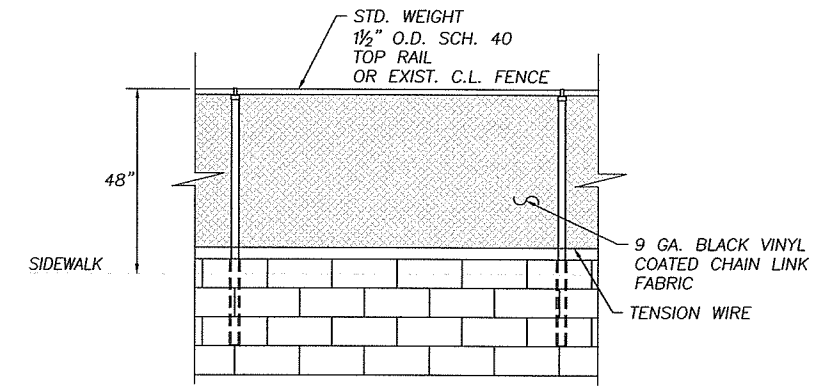

KEYSTONE RETAINING WALL W/ CHAIN LINK FENCE

N.T.S.

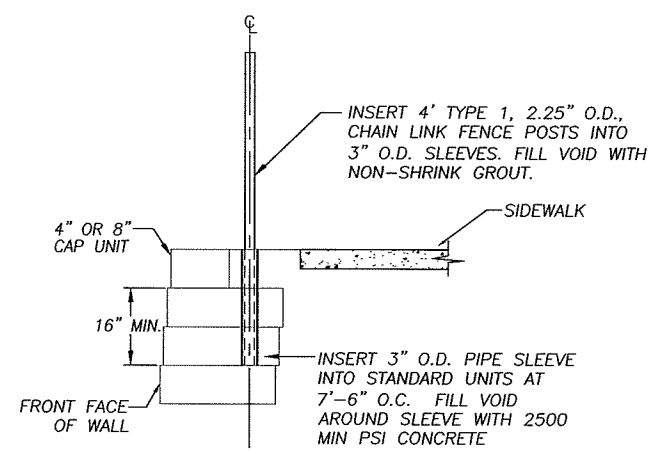

RETAINING WALL FENCE POST DETAIL

N.T.S.

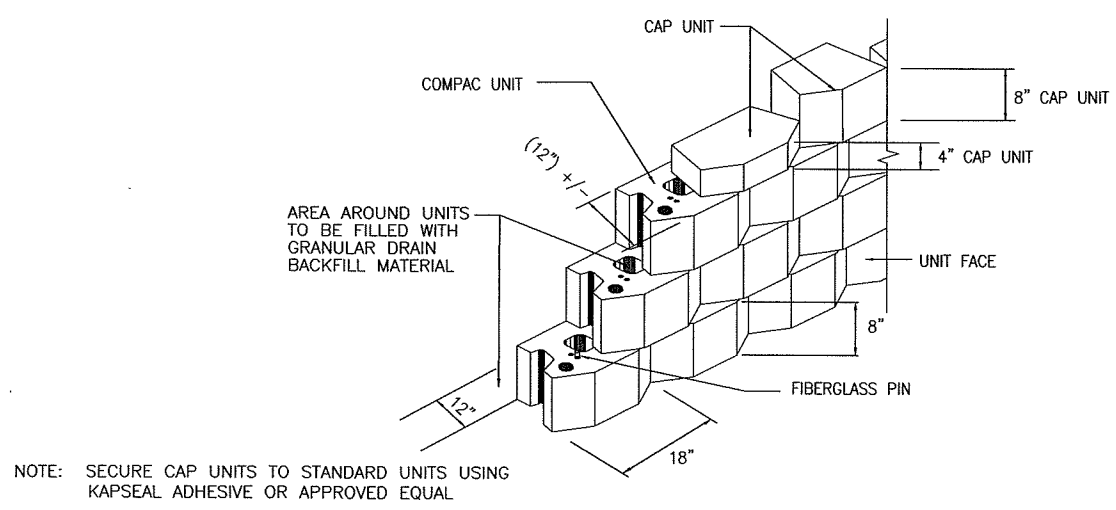

NOTE: SECURE CAP UNITS TO STANDARD UNITS USING KAPSEAL ADHESIVE OR APPROVED EQUAL

COMPAC BLOCK DETAIL

N.T.S.

FOR INFORMATIONAL PURPOSES ONLY

ALL PLAN DETAIL AND INFORMATION IS NOT SHOWN ON THIS 90% COMPLETED SET OF PLANS.

90% SUBMITTAL - JULY 2004

DESIGNED:	TSH
DRAWN:	NPR
CRP:	330222
HOR.	1" = 60'
VERT.	N/A
DATE:	7/2004
DWG:	
SHEET	41 OF 99

CALL 48 HOURS BEFORE YOU DIG 1–800–553–4344 "It's the Law" NORTHWEST UTILITIES NOTIFICATION CENTER

Harper Houf Peterson Righellis Inc.
ENGINEERS - PLANNERS - SURVEYORS
1104 Main Street, Suite 100, Vancouver, WA 98660
TEL 360.750.1131 www.hhpr.com FAX 360.750.1141

DESIGN & ENGINEERING DIVISION

NE 88TH STREET RETAINING WALL DETAILS

proud past, promising future
CLARK COUNTY WASHINGTON

P:\Crk-12 (NE 88th)\CRK12-DWGS\ Crk12-DT06.DWG

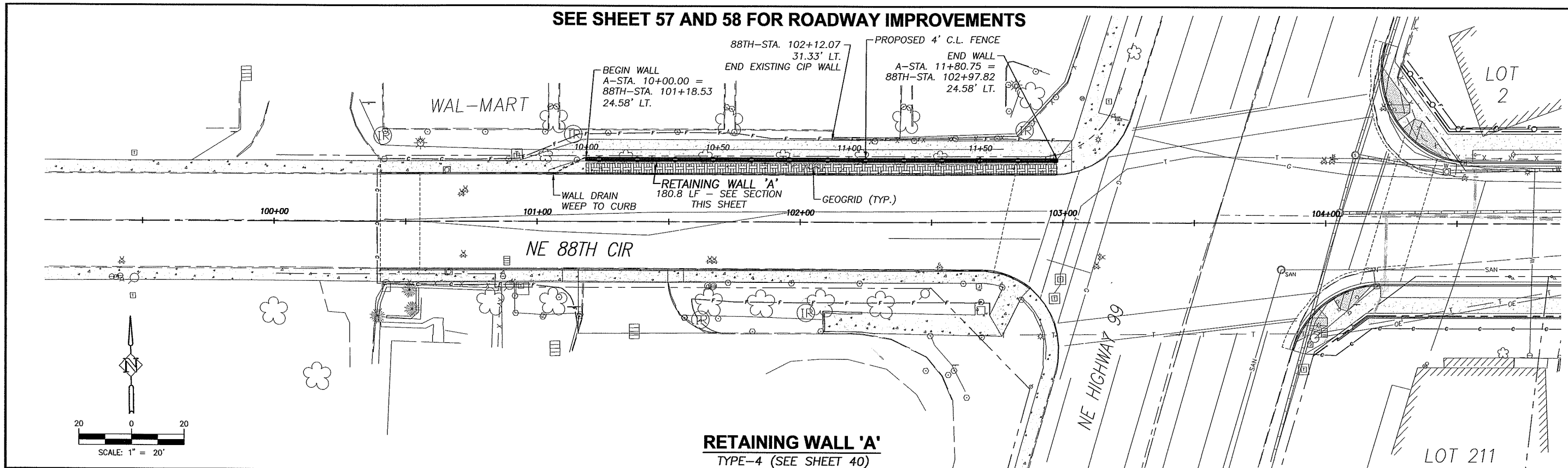

RETAINING WALL 'A'

TYPE–4 (SEE SHEET 40)

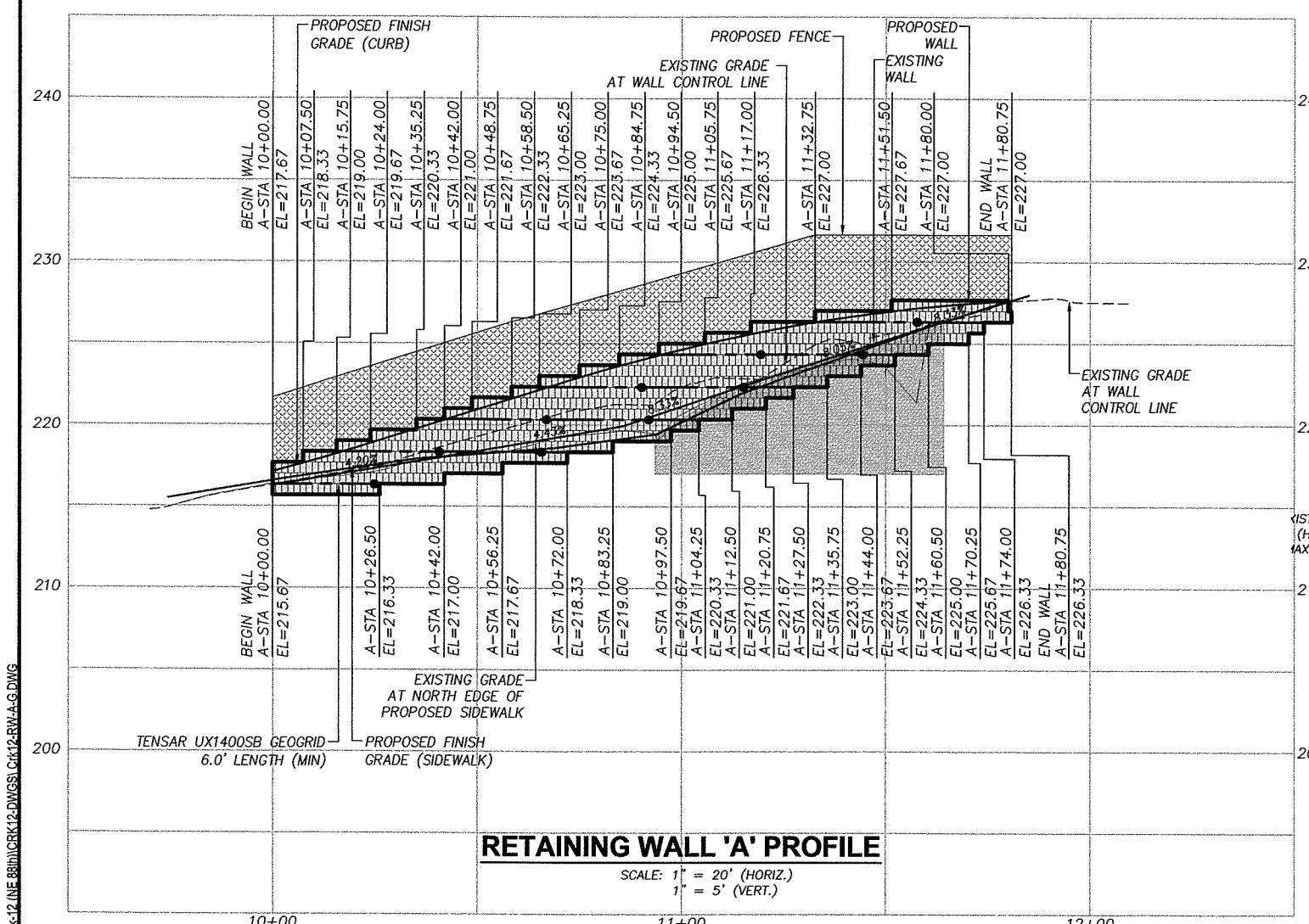

RETAINING WALL 'A' PROFILE

SCALE: 1" = 20' (HORIZ.)
1" = 5' (VERT.)

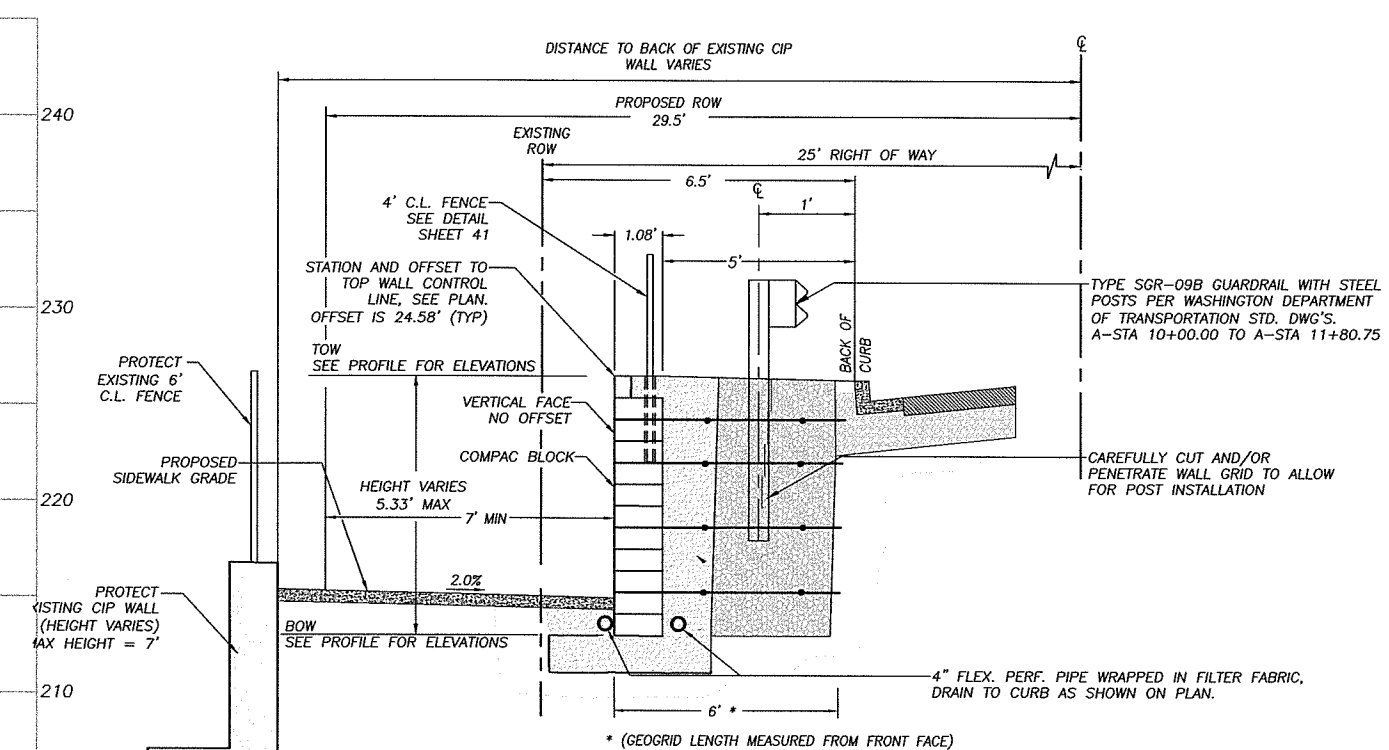

WALL 'A' TYPICAL SECTION

N.T.S.

FOR INFORMATIONAL PURPOSES ONLY

ALL PLAN DETAIL AND INFORMATION IS NOT SHOWN ON THIS
90% COMPLETED SET OF PLANS.

90% SUBMITTAL - JULY 2004

P:\Crk-12 (NE 88th)\CRK12-DWGS\Crk12-RW-A-G.DWG

DESIGNED:	KAS
DRAWN:	RAF
CRP:	330222
HOR.	1" = 20'
VERT.	1" = 5'
DATE:	7/2004
DWG:	
SHEET	42 OF 99

CALL 48 HOURS BEFORE YOU DIG
1–800–553–4344
"It's the Law"
NORTHWEST UTILITY NOTIFICATION CENTER

Harper Houf Peterson Righellis Inc.
ENGINEERS · PLANNERS · SURVEYORS
1100 MAIN STREET, SUITE 200, VANCOUVER, WA 98660
TEL 360.750.1131 www.hhpr.com FAX 360.750.1141

DESIGN & ENGINEERING DIVISION

NE 88TH STREET
RETAINING WALL PLAN & PROFILE
WALL 'A'

proud past, promising future

CLARK COUNTY
WASHINGTON

SEE SHEETS 58 AND 59 FOR ROADWAY IMPROVEMENTS

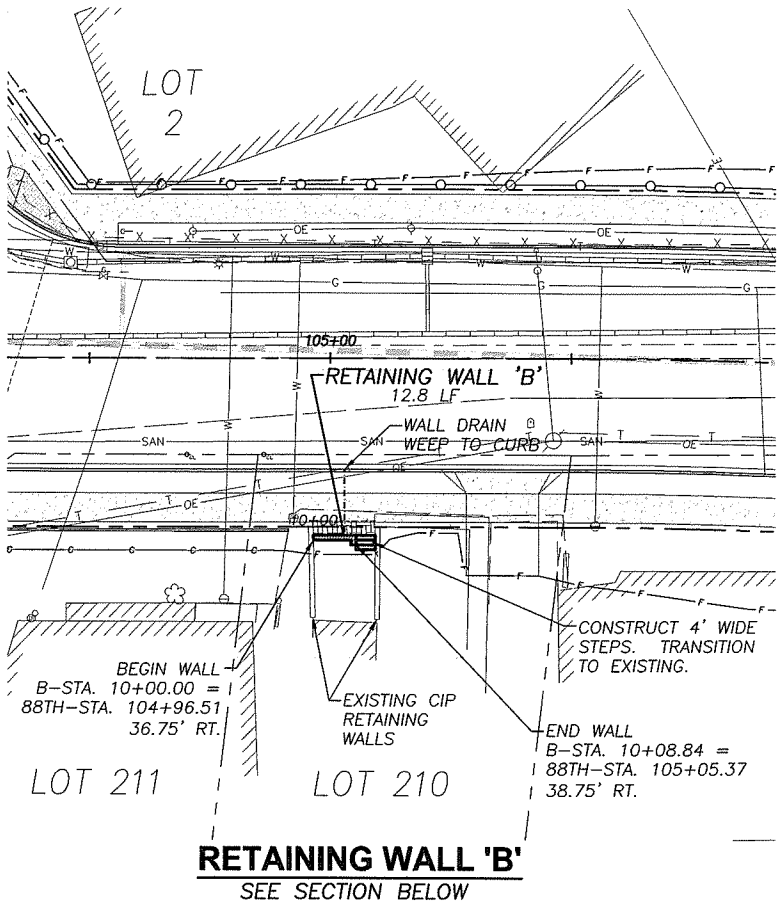

RETAINING WALL 'B'

SEE SECTION BELOW

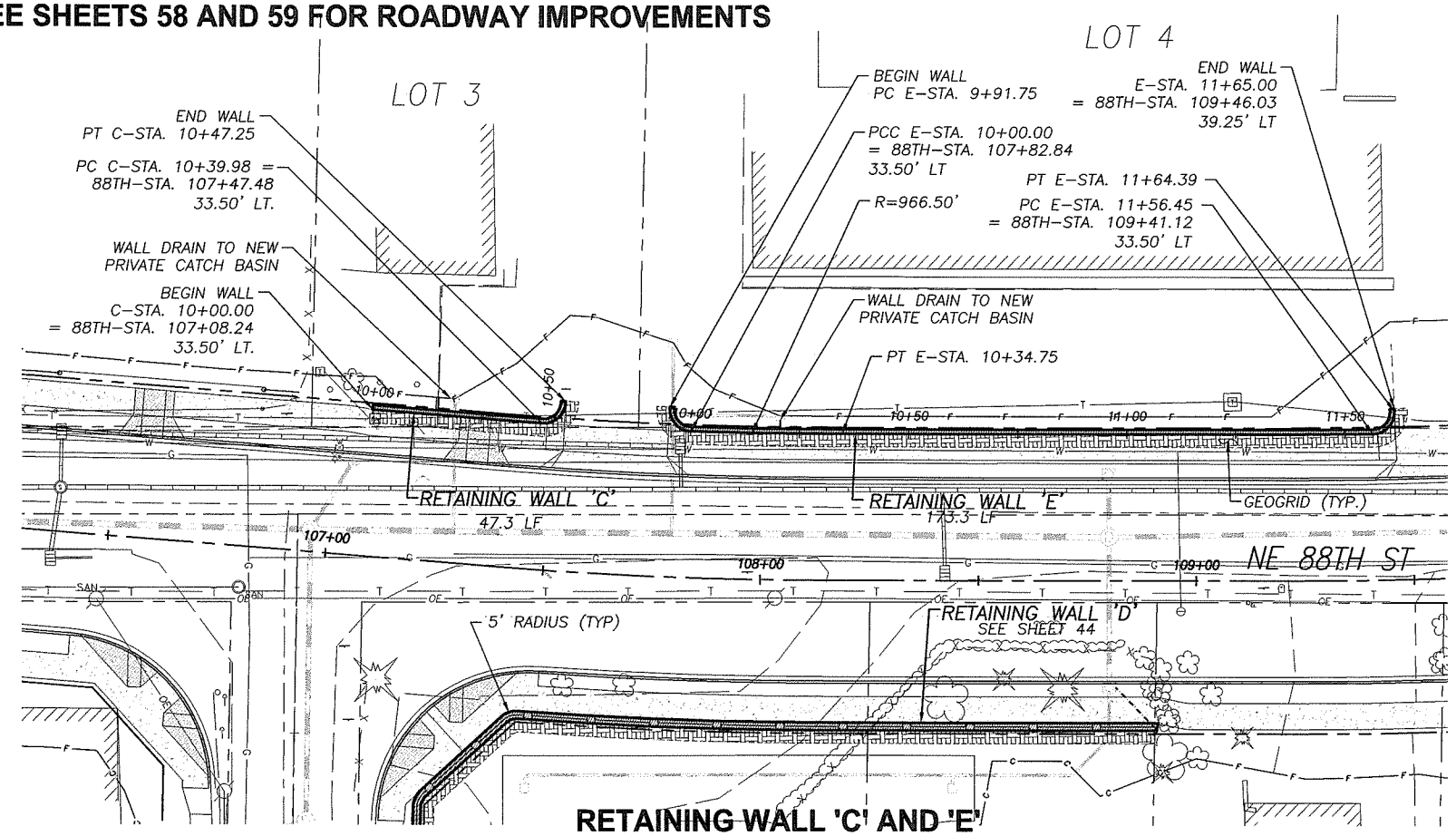

RETAINING WALL 'C' AND 'E'

TYPE-6 (SEE SHEET 41)

20 0 20

SCALE: 1" = 20'

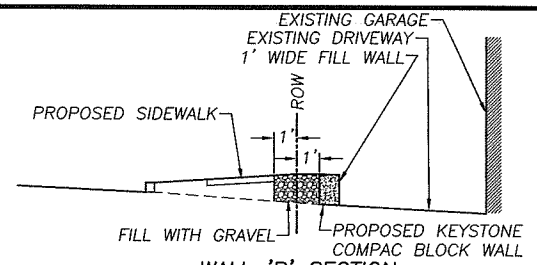

WALL 'B' SECTION

NTS

FOR INFORMATIONAL PURPOSES ONLY

ALL PLAN DETAIL AND INFORMATION IS NOT SHOWN ON THIS 90% COMPLETED SET OF PLANS.

90% SUBMITTAL - JULY 2004

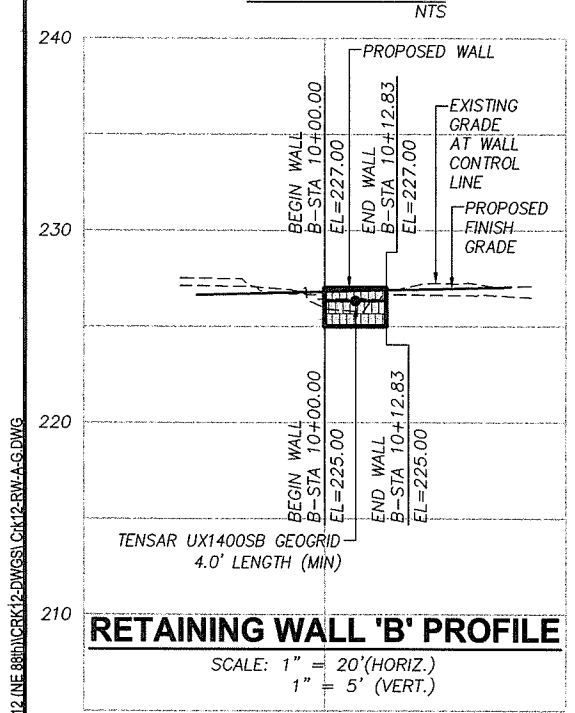

RETAINING WALL 'B' PROFILE

SCALE: 1" = 20'(HORIZ.)
1" = 5' (VERT.)

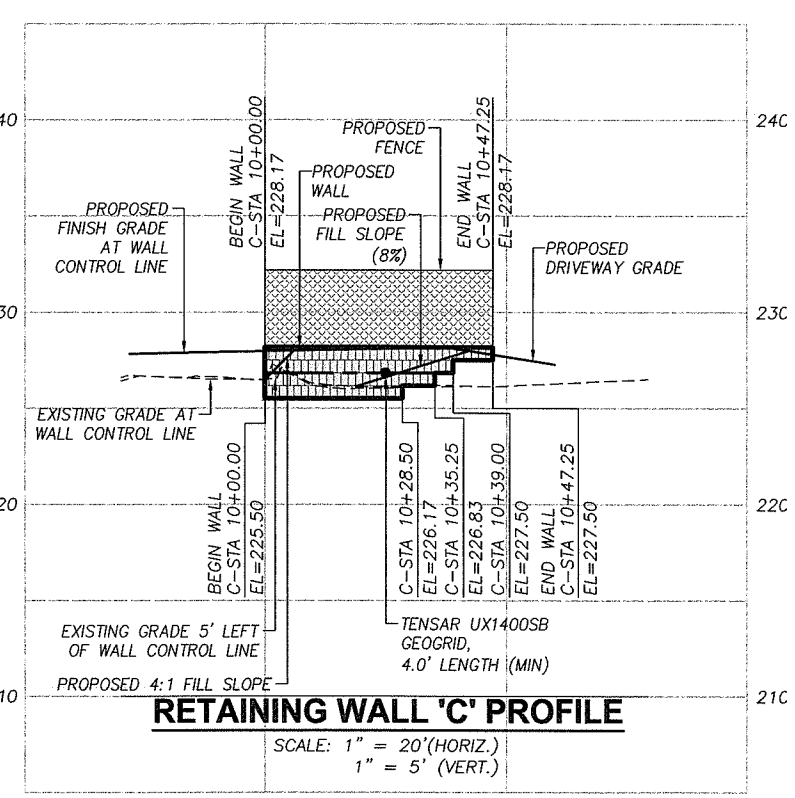

RETAINING WALL 'C' PROFILE

SCALE: 1" = 20'(HORIZ.)
1" = 5' (VERT.)

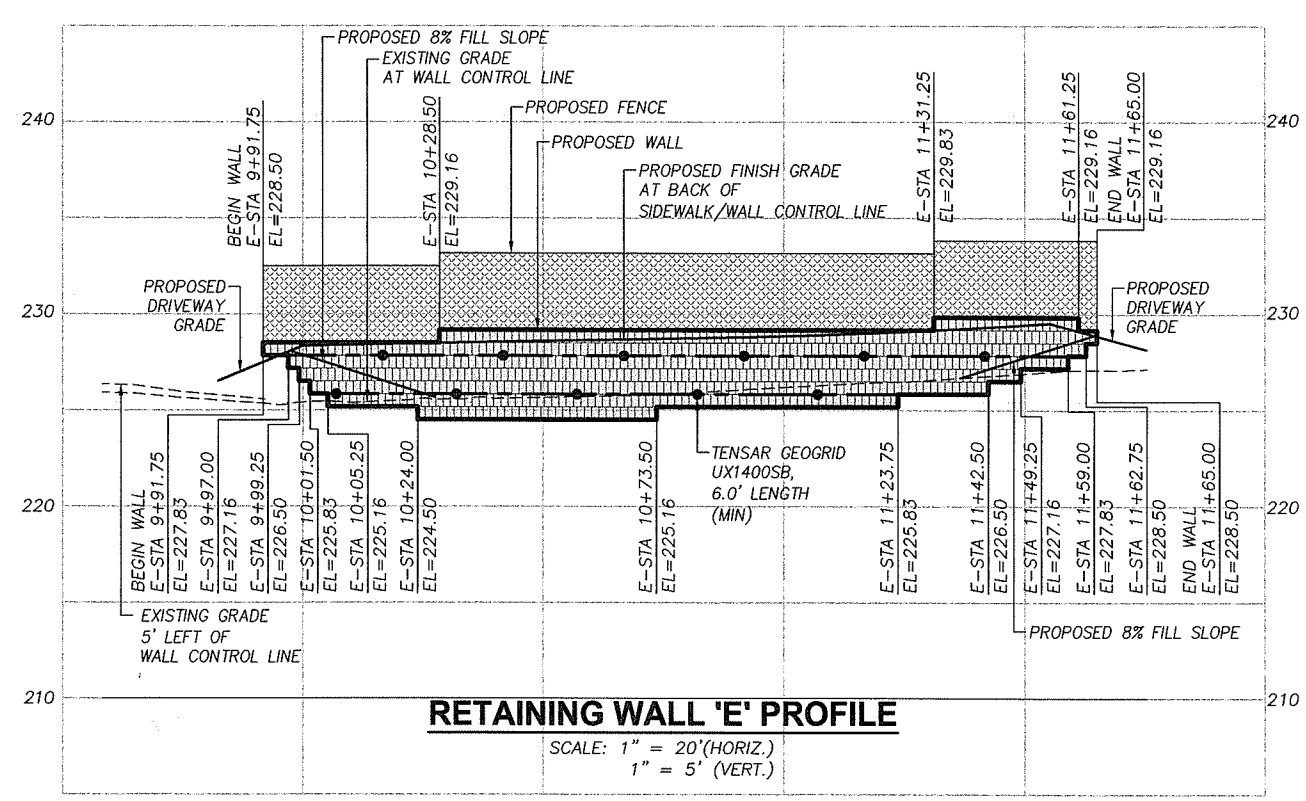

RETAINING WALL 'E' PROFILE

SCALE: 1" = 20'(HORIZ.)
1" = 5' (VERT.)

DESIGNED:	KAS
DRAWN:	RAF
CRP:	330222
HOR.	1" = 20'
VERT.	1" = 5'
DATE:	7/2004
DWG:	
SHEET	43 OF 99

CALL 48 HOURS BEFORE YOU DIG 1-800-553-4344 "It's the Law" NORTHWEST UTILITIES NOTIFICATION CENTER

Harper Houf Peterson Righellis Inc.

ENGINEERS · PLANNERS · SURVEYORS
1100 MAIN STREET, Suite 100, VANCOUVER, WA 98660
TEL 360.750.1131 www.hhpr.com FAX 360.750.1141

DESIGN & ENGINEERING DIVISION

NE 88TH STREET
RETAINING WALL PLAN & PROFILE
WALLS 'B', 'C' & 'E'

proud past, promising future

CLARK COUNTY WASHINGTON

P:\Clk-12 (NE 88th)\CRK12-DWGS\ Crk12-RW1-A-G.DWG

SEE SHEETS 58 AND 59 FOR ROADWAY IMPROVEMENTS

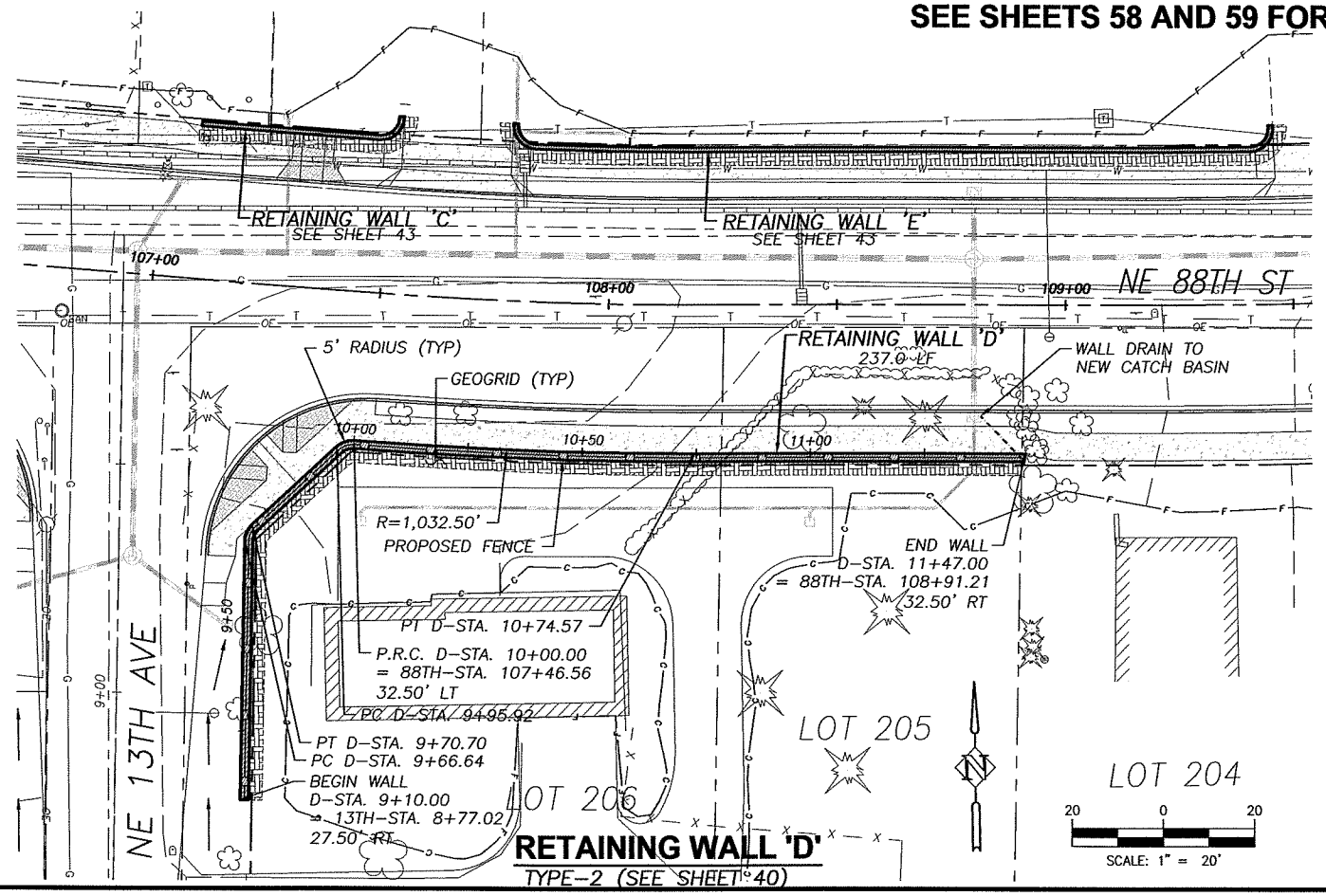

RETAINING WALL 'D'
TYPE-2 (SEE SHEET 40)

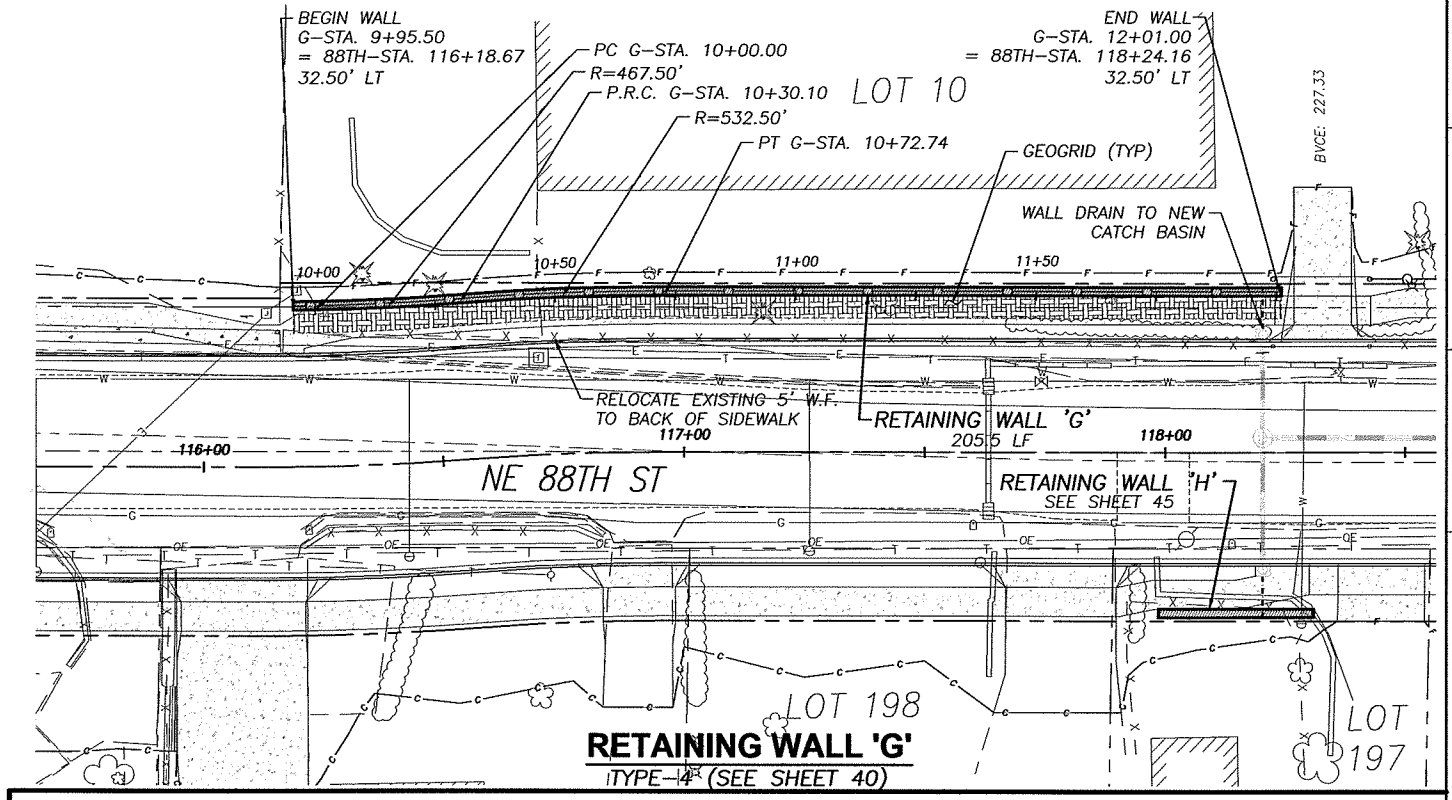

RETAINING WALL 'G'
TYPE-4 (SEE SHEET 40)

FOR INFORMATIONAL PURPOSES ONLY

ALL PLAN DETAIL AND INFORMATION IS NOT SHOWN ON THIS 90% COMPLETED SET OF PLANS.

90% SUBMITTAL - JULY 2004

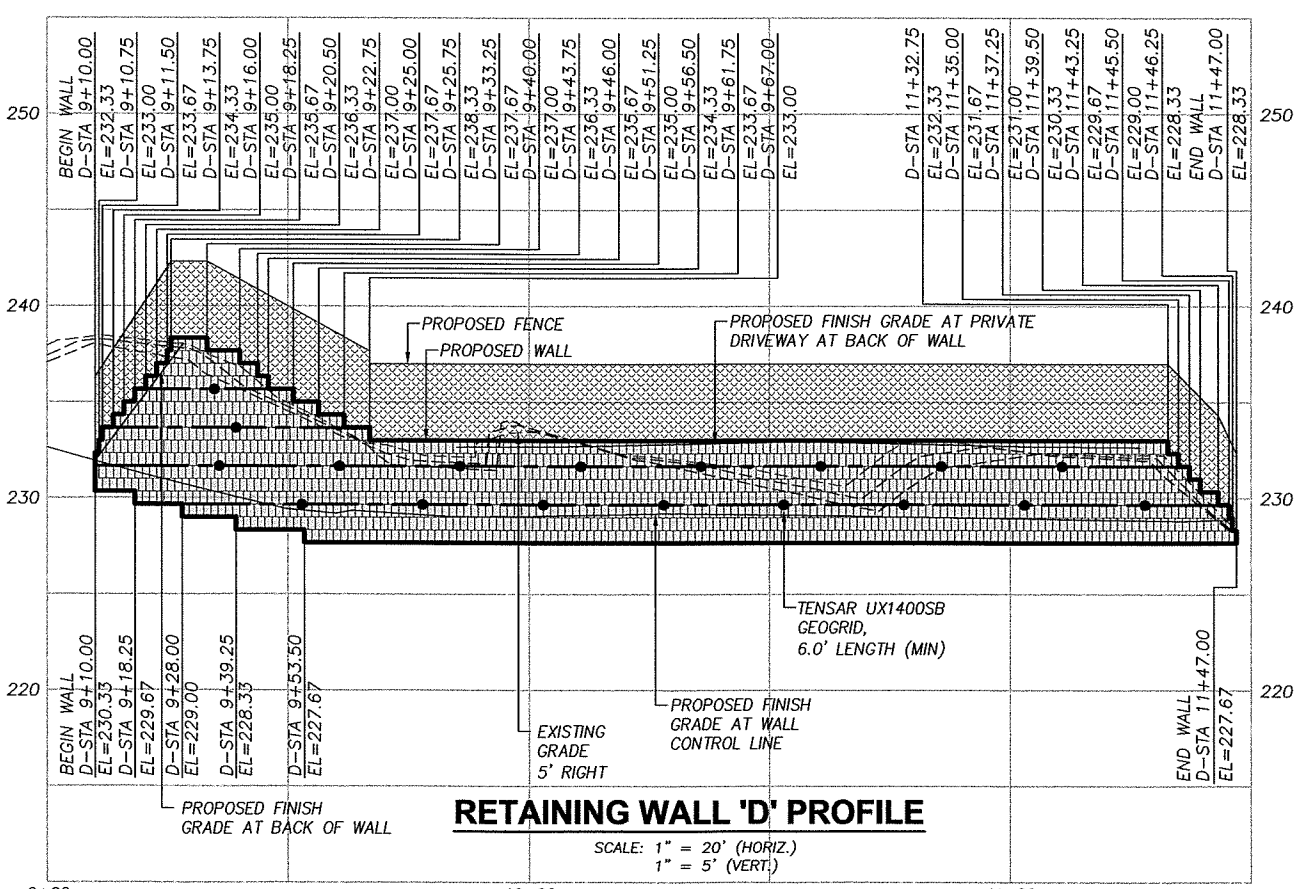

RETAINING WALL 'D' PROFILE

SCALE: 1" = 20' (HORIZ.)
1" = 5' (VERT.)

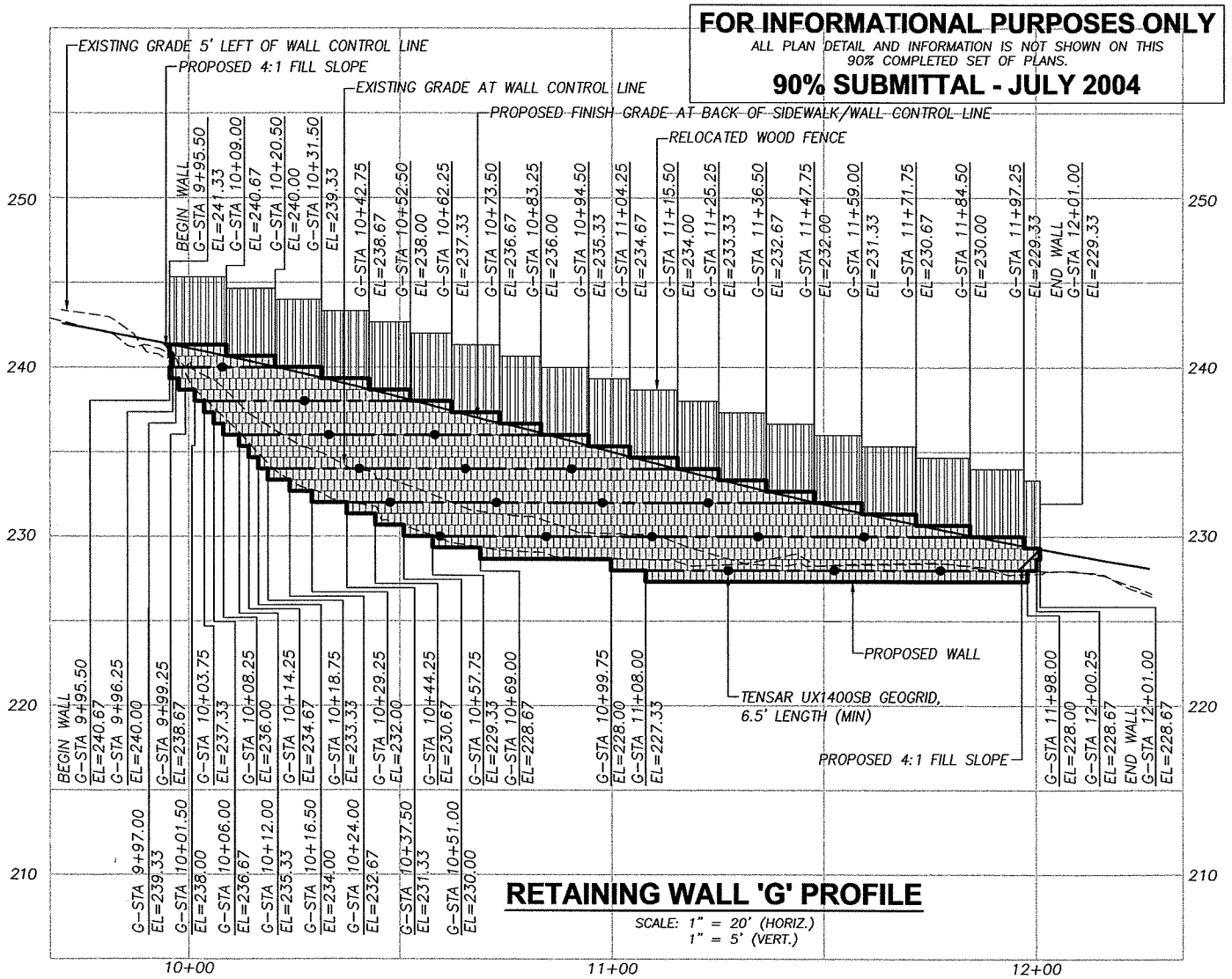

RETAINING WALL 'G' PROFILE

SCALE: 1" = 20' (HORIZ.)
1" = 5' (VERT.)

DESIGNED:	KAS
DRAWN:	RAF
CRP:	330222
HOR.	1" = 20'
VERT.	N/A
DATE:	7/2004
DWG:	
SHEET	44 OF 99

CALL 48 HOURS BEFORE YOU DIG
1-800-553-4344
"It's the Law"
NORTHWEST UTILITIES NOTIFICATION CENTER

Harper Houf Peterson Righellis Inc.
ENGINEERS • PLANNERS • LANDSCAPE ARCHITECTS • SURVEYORS
1104 MAIN STREET, Suite 100, VANCOUVER, WA 98660
TEL 360.750.1131 www.hhpr.com FAX 360.750.1141

DESIGN & ENGINEERING DIVISION

NE 88TH STREET
RETAINING WALL PLAN & PROFILE
WALL 'D' & WALL 'G'

proud past, promising future

CLARK COUNTY WASHINGTON

P:\Clk-12 (NE 88th)\CRK12-DWGS\ Crk12-RW-A-G.DWG

SEE SHEET 59 AND 61 FOR ROADWAY IMPROVEMENTS

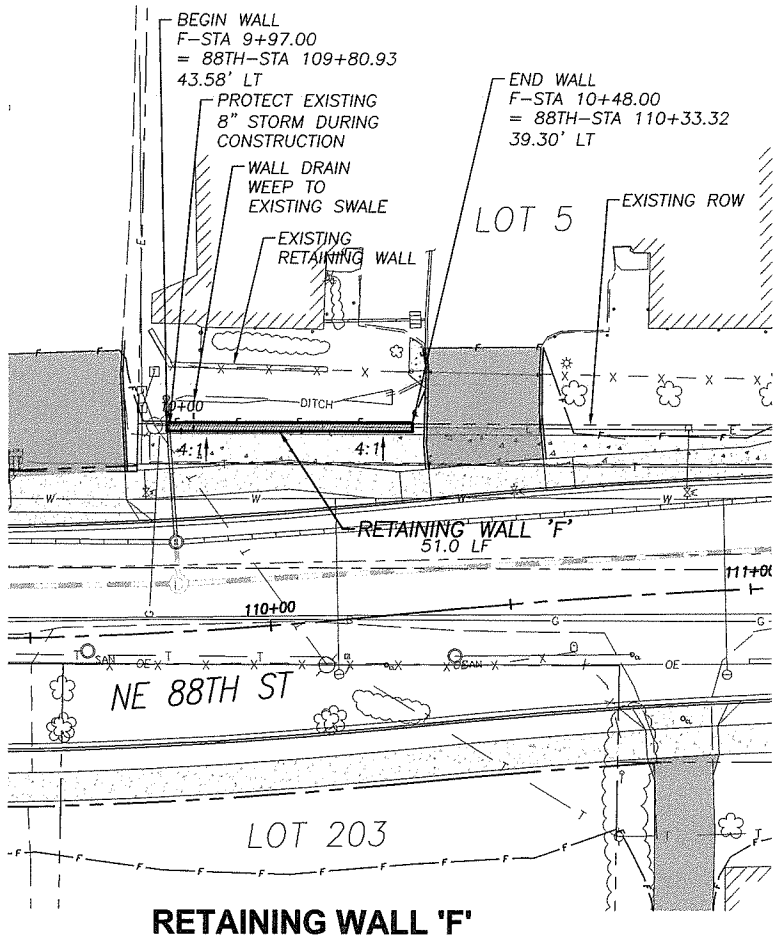

RETAINING WALL 'F'

TYPE-3 (SEE SHEET 40)

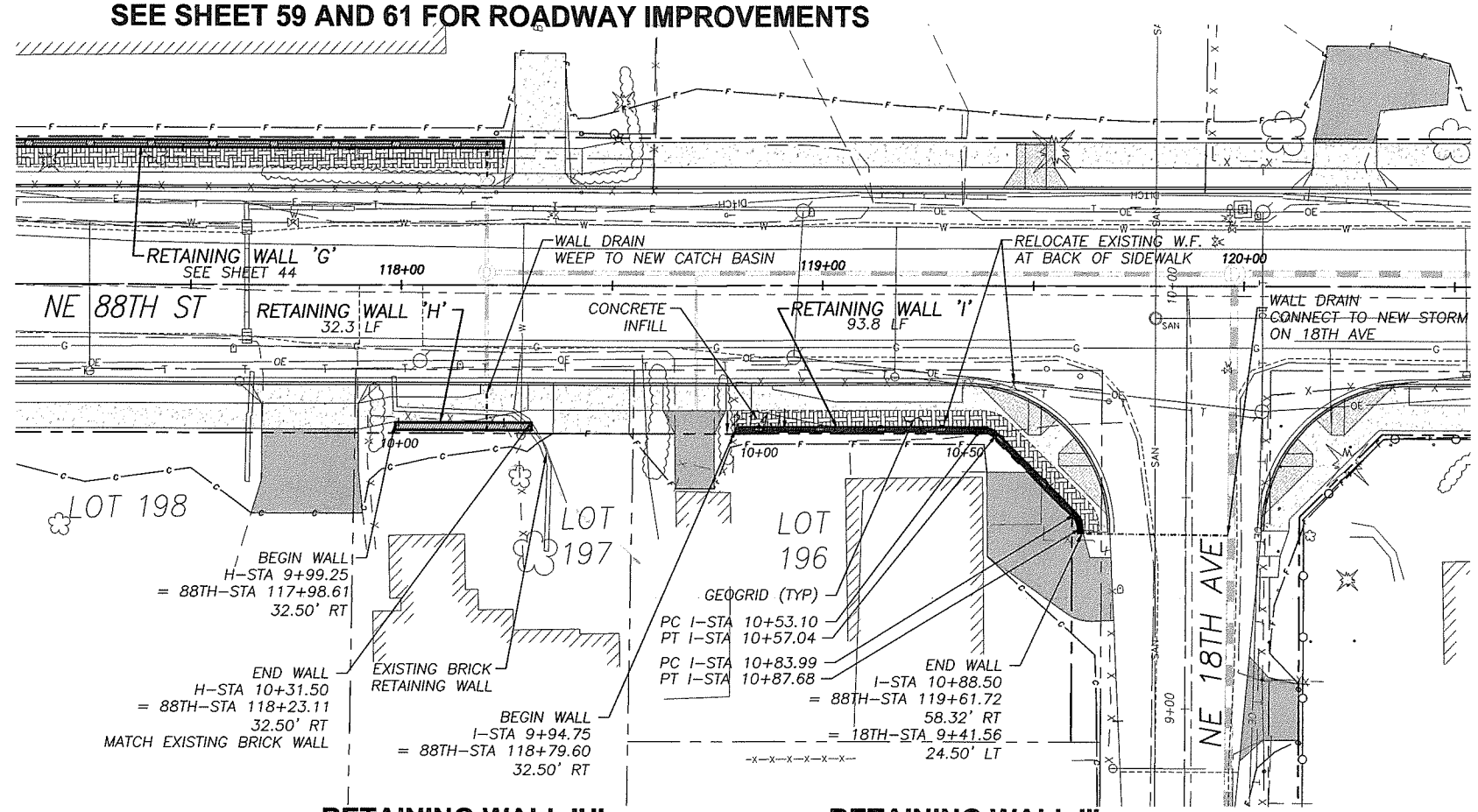

RETAINING WALL 'H'

TYPE-1 (SEE SHEET 40)

RETAINING WALL 'I'

TYPE-6 (SEE SHEET 41)

20 0 20
SCALE: 1" = 20'

FOR INFORMATIONAL PURPOSES ONLY

ALL PLAN DETAIL AND INFORMATION IS NOT SHOWN ON THIS 90% COMPLETED SET OF PLANS.

90% SUBMITTAL - JULY 2004

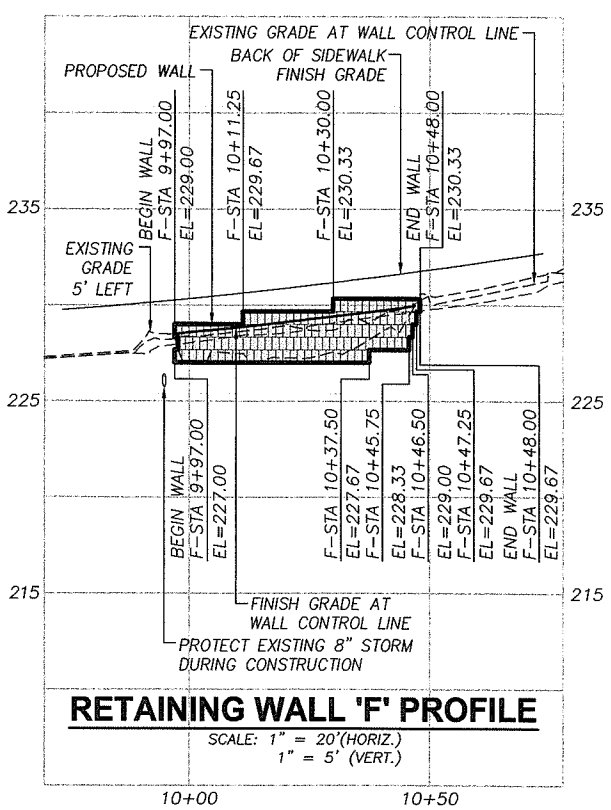

RETAINING WALL 'F' PROFILE

SCALE: 1" = 20'(HORIZ.)
1" = 5' (VERT.)

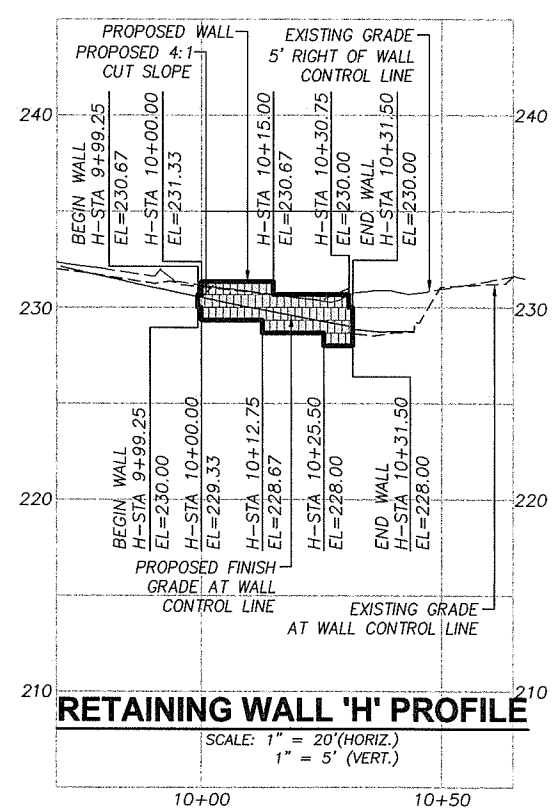

RETAINING WALL 'H' PROFILE

SCALE: 1" = 20'(HORIZ.)
1" = 5' (VERT.)

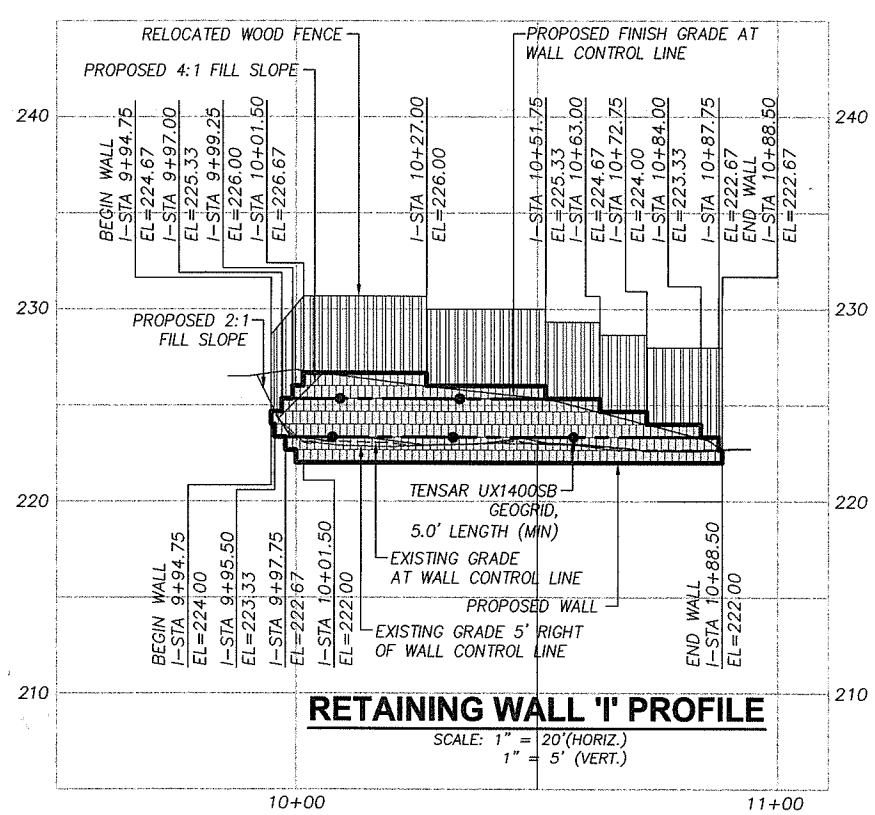

RETAINING WALL 'I' PROFILE

SCALE: 1" = 20'(HORIZ.)
1" = 5' (VERT.)

P:\Clrk-12 INE 88th\ICRK12-DWGS\ICrk12-RW-F-N.DWG

DESIGNED:	KAS
DRAWN:	RAF
CRP:	330222
HOR.	1" = 20'
VERT.	1" = 5'
DATE:	7/2004
DWG:	
SHEET	45 OF 99

CALL 48 HOURS BEFORE YOU DIG 1-800-553-4344 "It's the Law" NORTHWEST UTILITIES NOTIFICATION CENTER

Harper Houf Peterson Righellis Inc.
ENGINEERS • PLANNERS • SURVEYORS
1104 MAIN STREET, SUITE 100, VANCOUVER, WA 98660
TEL 360.750.1131 www.hhpr.com FAX 360.750.1141

DESIGN & ENGINEERING DIVISION

NE 88TH STREET
RETAINING WALL PLAN & PROFILE
WALLS 'F', 'H' & 'I'

proud past, promising future

CLARK COUNTY WASHINGTON

P:\Crk-12 (NE 88th)\CRK12-DWGS\ Crk12-RW-F-N.DWG

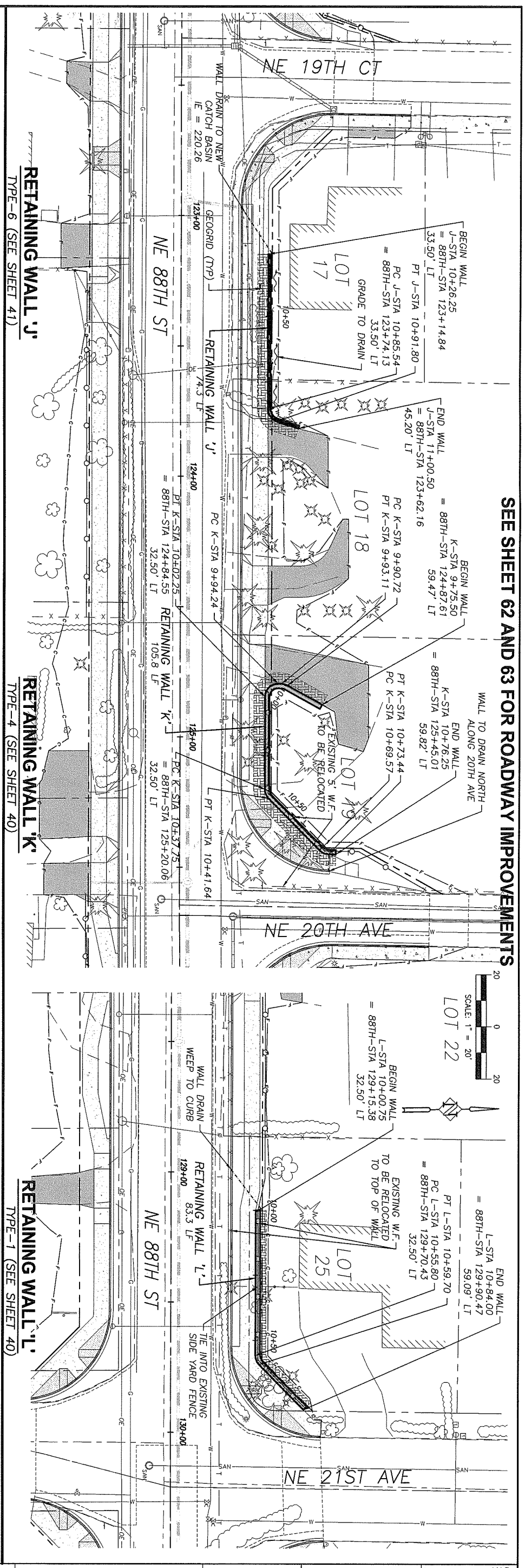

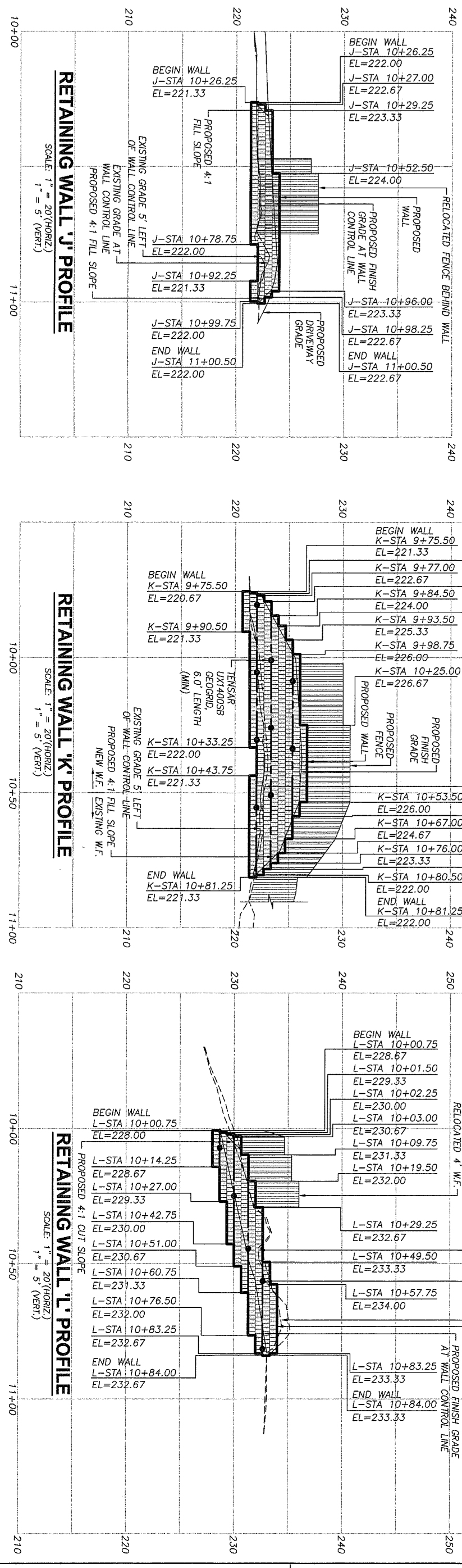

FOR INFORMATIONAL PURPOSES ONLY

ALL PLAN DETAIL AND INFORMATION IS NOT SHOWN ON THIS 90% COMPLETED SET OF PLANS.

90% SUBMITTAL - JULY 2004

proud past, promising future

CLARK COUNTY WASHINGTON

DESIGN & ENGINEERING DIVISION

NE 88TH STREET
RETAINING WALL PLAN & PROFILE
WALLS 'J', 'K' & 'L'

HHPR Harper Houf Peterson Righellis Inc.
ENGINEERS · PLANNERS · SURVEYORS
1104 MAIN STREET, SUITE 100, VANCOUVER, WA 98660
TEL 360.750.1131 www.hhpr.com FAX 360.750.1141

CALL 48 HOURS BEFORE YOU DIG 1-800-553-4344 "It's the Law"
NORTHWEST UTILITIES NOTIFICATION CENTER

DESIGNED:	KAS
DRAWN:	RAF
CRP:	330222
HOR.	1" = 20'
VERT.	1" = 5'
DATE:	7/2004
DWG:	
SHEET	46 OF 99

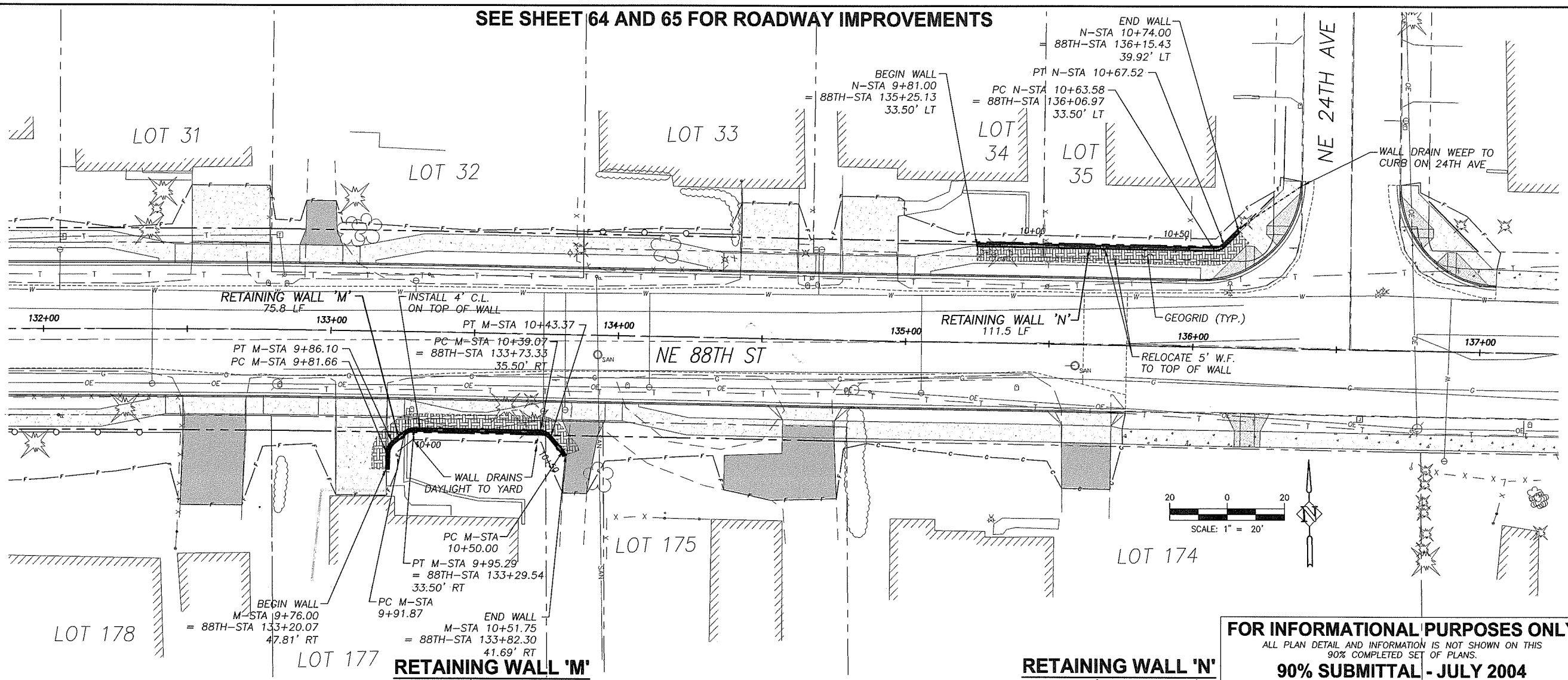

RETAINING WALL 'M'

TYPE-6 (SEE SHEET 41)

RETAINING WALL 'N'

TYPE-6 (SEE SHEET 41)

FOR INFORMATIONAL PURPOSES ONLY

ALL PLAN DETAIL AND INFORMATION IS NOT SHOWN ON THIS 90% COMPLETED SET OF PLANS.

90% SUBMITTAL - JULY 2004

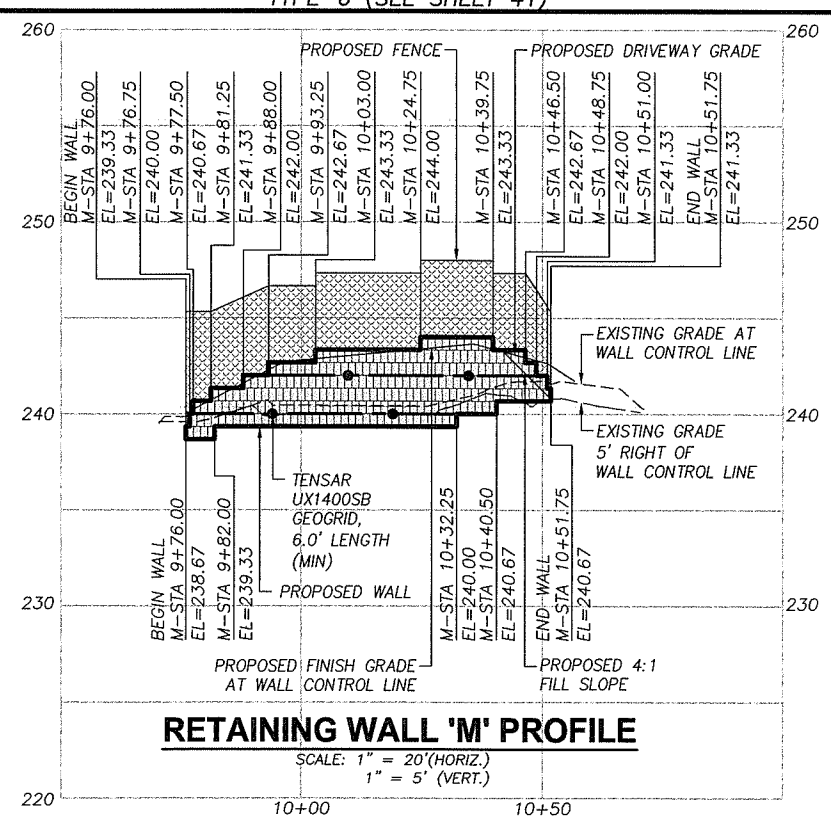

RETAINING WALL 'M' PROFILE

SCALE: 1" = 20'(HORIZ.)
1" = 5' (VERT.)

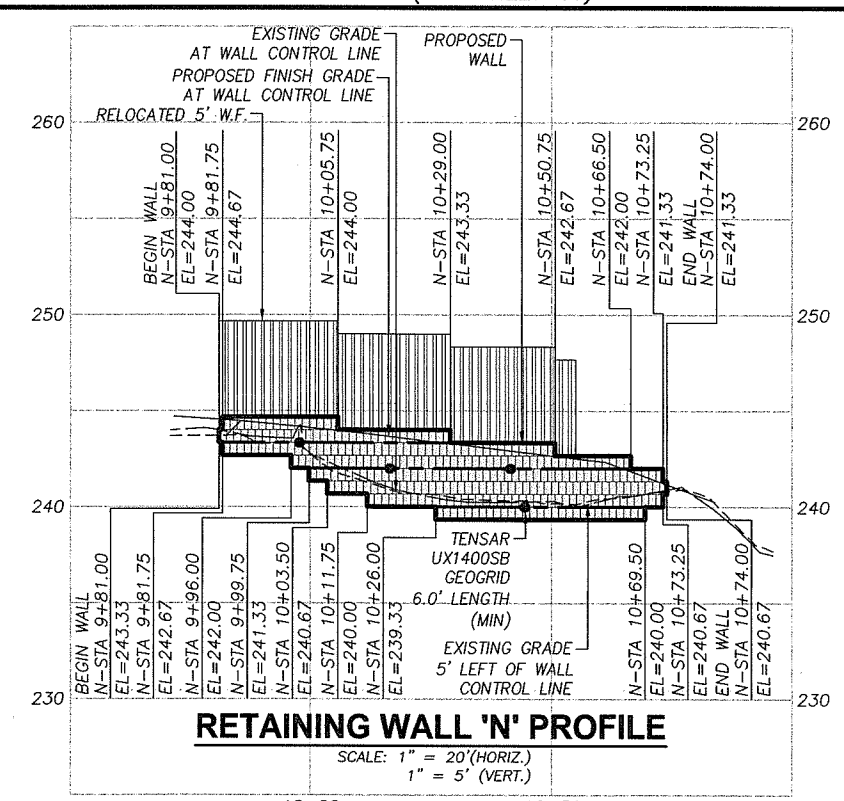

RETAINING WALL 'N' PROFILE

SCALE: 1" = 20'(HORIZ.)
1" = 5' (VERT.)

DESIGNED:	KAS
DRAWN:	RAF
CRP:	330222
HOR:	1" = 20'
VERT.	1" = 5'
DATE:	7/2004
DWG:	SHEET 47 OF 99

CALL 48 HOURS BEFORE YOU DIG 1-800-553-4344 "It's the Law" NORTHWEST UTILITIES NOTIFICATION CENTER

Harper Houf Peterson Righellis Inc.
ENGINEERS · PLANNERS · SURVEYORS
1104 MAIN STREET, SUITE 100, VANCOUVER, WA 98660
TEL 360.750.1131 www.hhpr.com FAX 360.750.1141

DESIGN & ENGINEERING DIVISION

NE 88TH STREET
RETAINING WALL PLAN & PROFILE
WALLS 'M' & 'N'

proud past, promising future

CLARK COUNTY WASHINGTON

P:\Crk-12 (NE 88th)\CRK12-DWGS\Crk12-RW-F-N.DWG

P:\Crk-12 (NE 88th)\CRK12-DWGS\ Crk12-RW-O-U.DWG

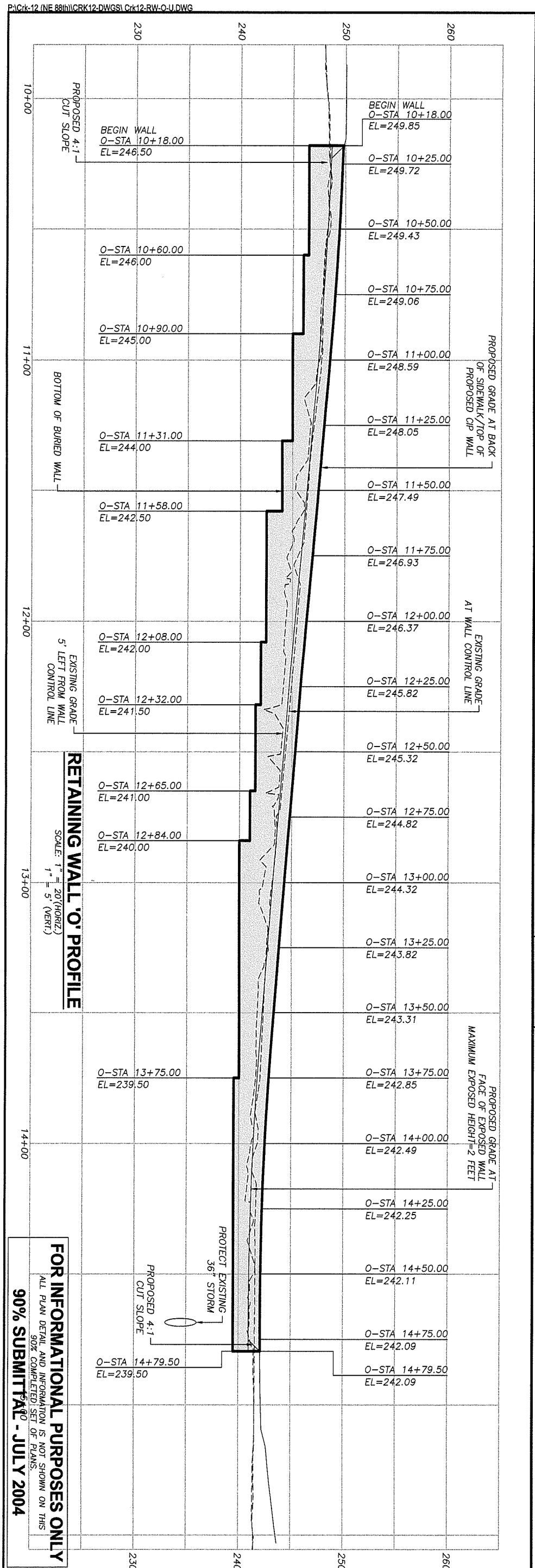

RETAINING WALL 'O' PROFILE

SCALE: 1" = 20'(HORIZ.)
1" = 5' (VERT.)

FOR INFORMATIONAL PURPOSES ONLY

ALL PLAN DETAIL AND INFORMATION IS NOT SHOWN ON THIS 90% COMPLETED SET OF PLANS.

90% SUBMITTAL - JULY 2004

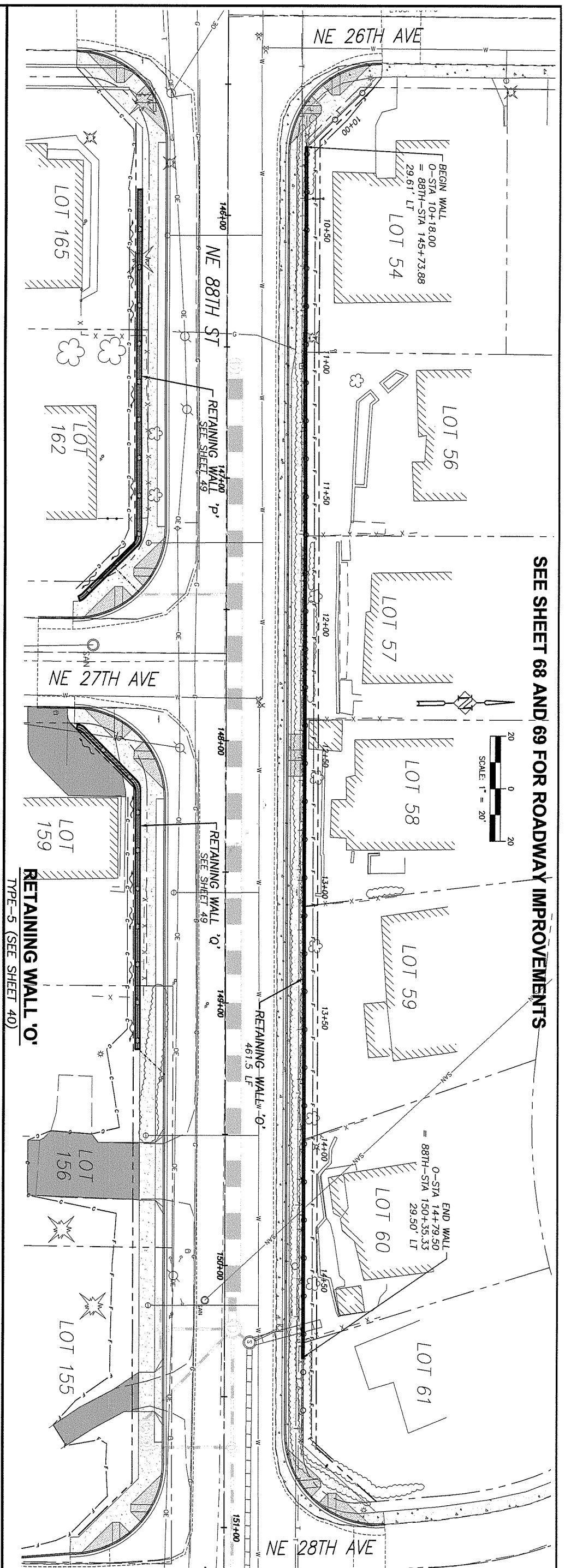

RETAINING WALL 'O'

TYPE-5 (SEE SHEET 40)

SEE SHEET 68 AND 69 FOR ROADWAY IMPROVEMENTS

proud past, promising future

CLARK COUNTY
WASHINGTON

DESIGN & ENGINEERING DIVISION

NE 88TH STREET
RETAINING WALL PLAN & PROFILE
WALL 'O'

HHPR Harper Houf Peterson Righellis Inc.
ENGINEERS • PLANNERS • SURVEYORS
1104 MAIN STREET, SUITE 100, VANCOUVER, WA 98660
TEL 360.750.1131 www.hhpr.com FAX 360.750.1141

CALL 48 HOURS BEFORE YOU DIG
1-800-553-4344
"It's the Law"
NORTHWEST UTILITIES NOTIFICATION CENTER

DESIGNED:	KAS
DRAWN:	RAF
CRP:	330222
HOR.	1" = 20'
VERT.	1" = 5'
DATE:	7/2004
DWG:	
SHEET	48 OF 99

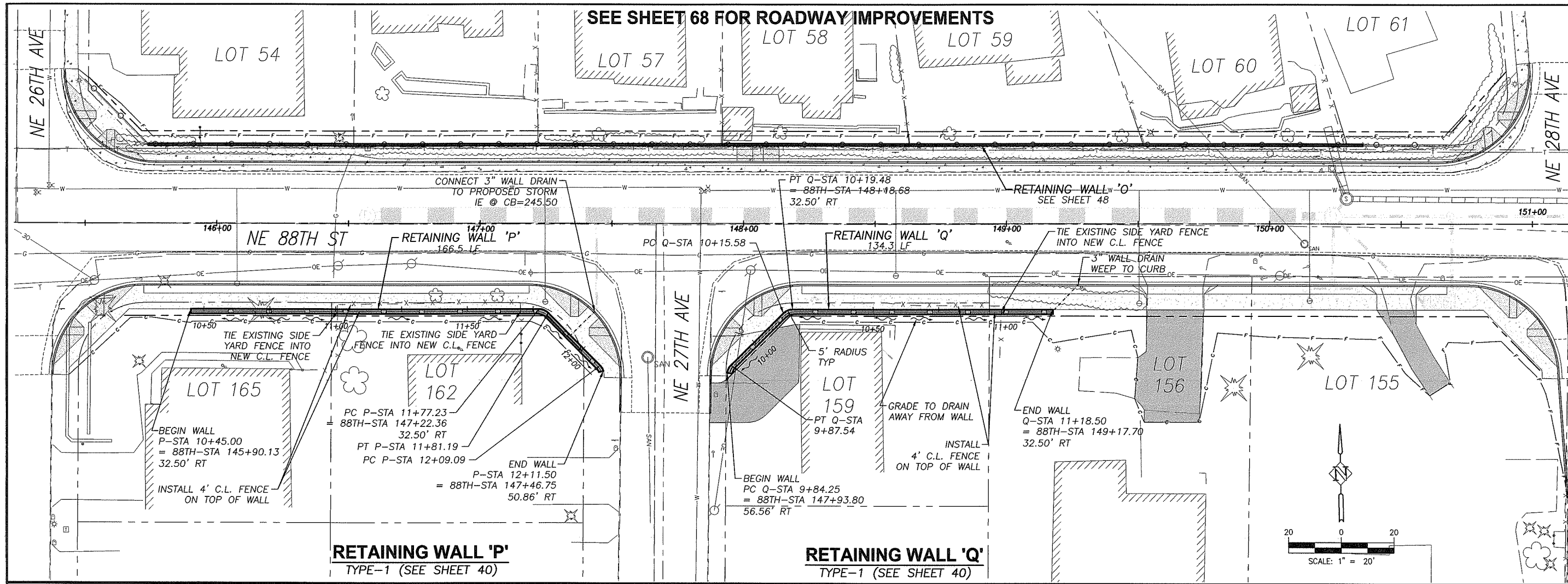

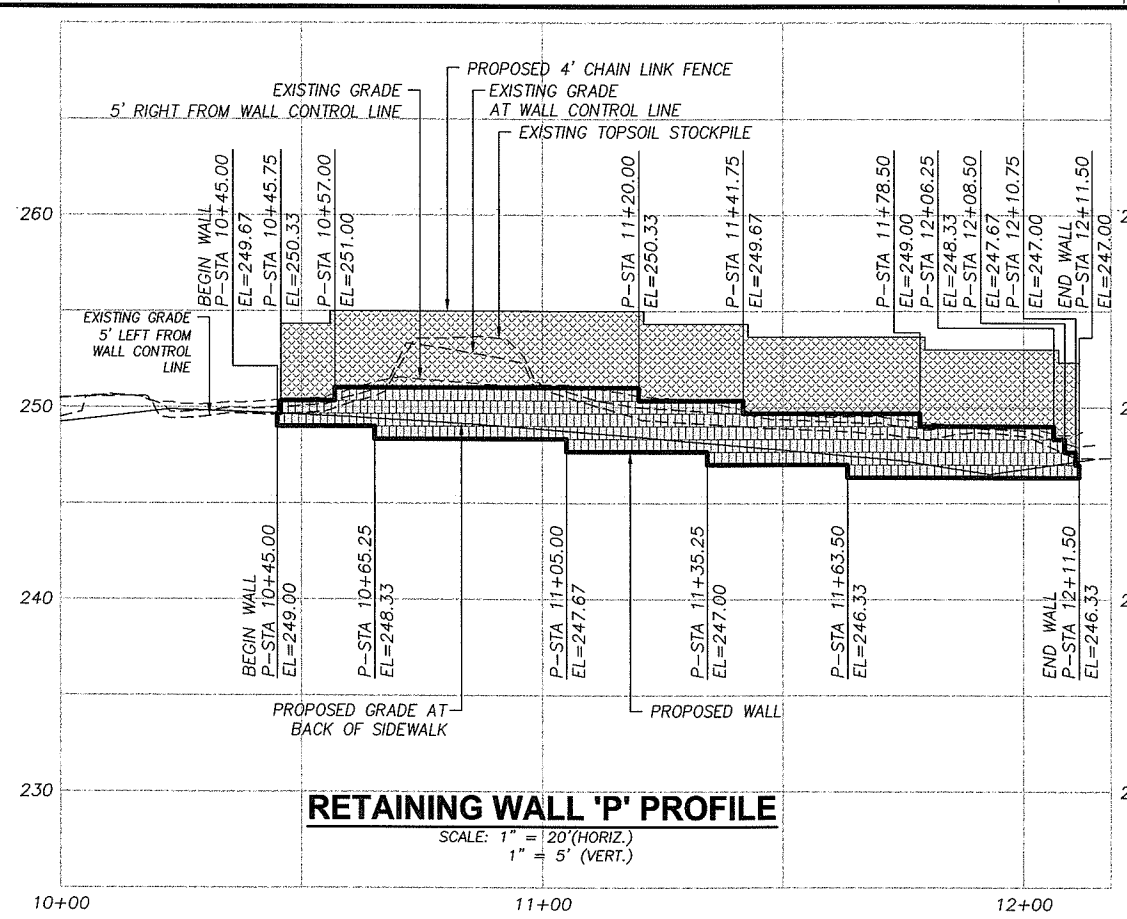

RETAINING WALL 'P' PROFILE

SCALE: 1" = 20'(HORIZ.)
1" = 5' (VERT.)

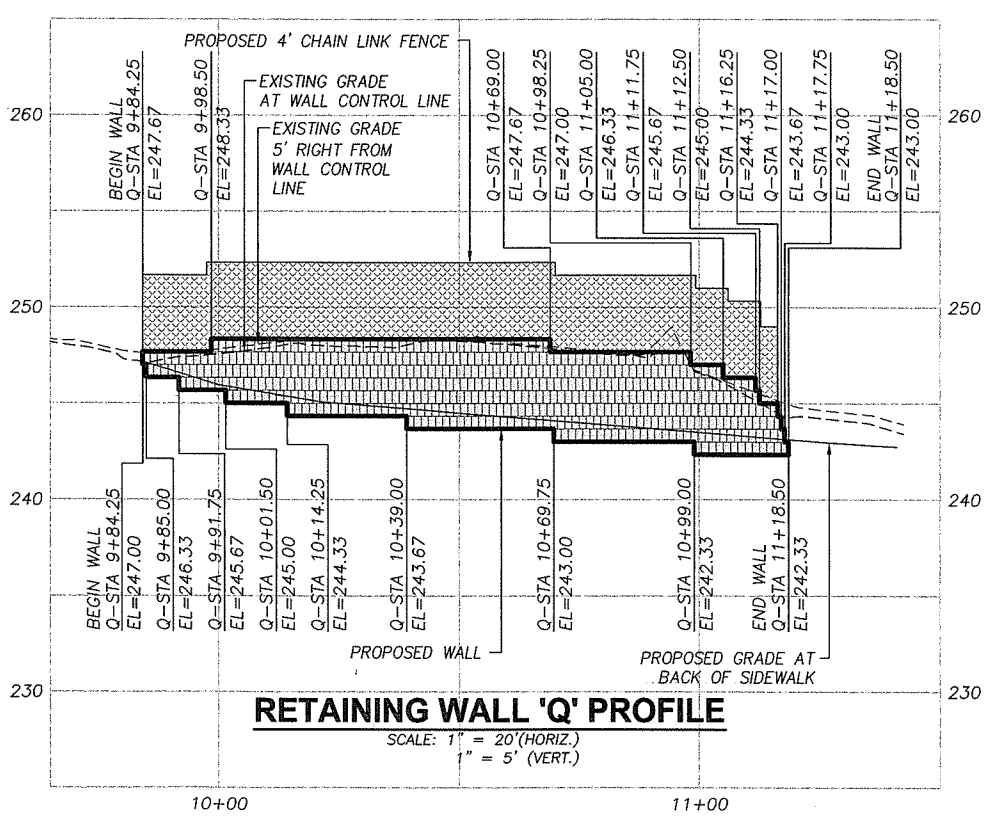

RETAINING WALL 'Q' PROFILE

SCALE: 1" = 20'(HORIZ.)
1" = 5' (VERT.)

FOR INFORMATIONAL PURPOSES ONLY

ALL PLAN DETAIL AND INFORMATION IS NOT SHOWN ON THIS 90% COMPLETED SET OF PLANS.

90% SUBMITTAL - JULY 2004

DESIGNED:	KAS
DRAWN:	RAF
CRP:	330222
HOR.	1" = 20'
VERT.	1" = 5'
DATE:	7/2004
DWG:	SHEET 49 OF 99

CALL 48 HOURS BEFORE YOU DIG 1-800-553-4344 "It's the Law" NORTHWEST UTILITIES NOTIFICATION CENTER

Harper Houf Peterson Righellis Inc.
ENGINEERS · PLANNERS · SURVEYORS
1104 MAIN STREET, SUITE 100, VANCOUVER, WA 98660
TEL 360.750.1131 www.hhpr.com FAX 360.750.1141

DESIGN & ENGINEERING DIVISION

NE 88TH STREET
RETAINING WALL PLAN & PROFILE
WALLS 'P' AND 'Q'

proud past, promising future
CLARK COUNTY WASHINGTON

P:\Clk-12 INE 88th\CRK12-DWGS\Clk12-RW-Q-10.DWG

P:\Crk-12 (NE 88th)\CRK12-DWGS\ Crk12-RW-O-U.DWG

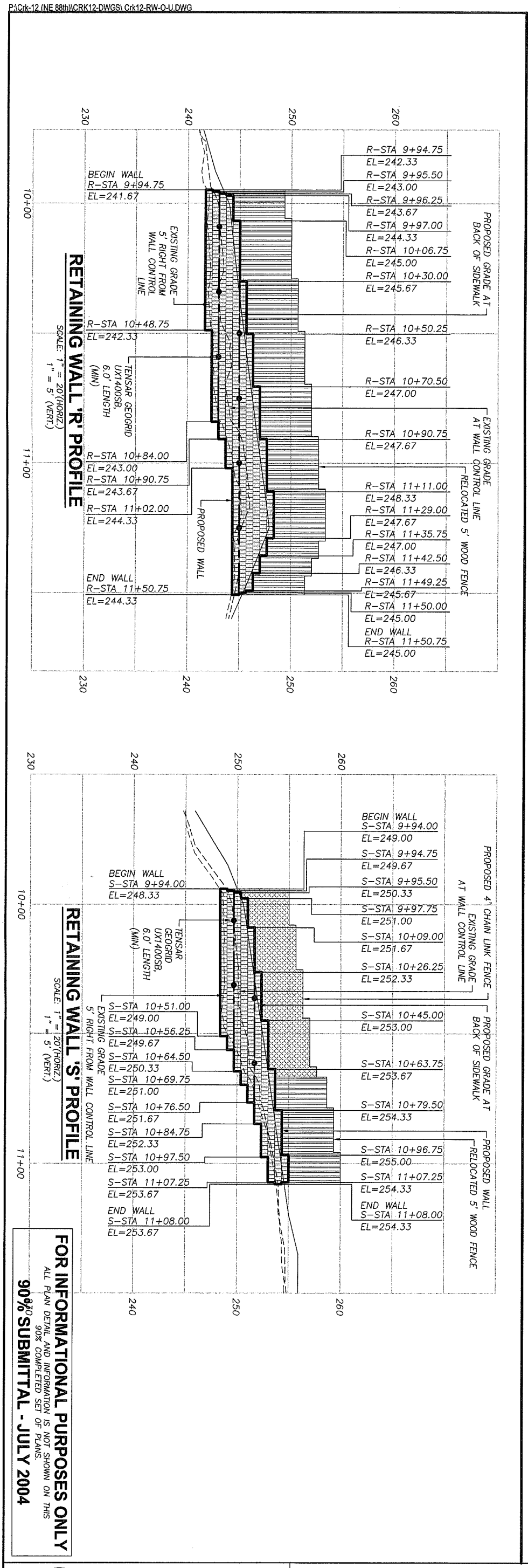

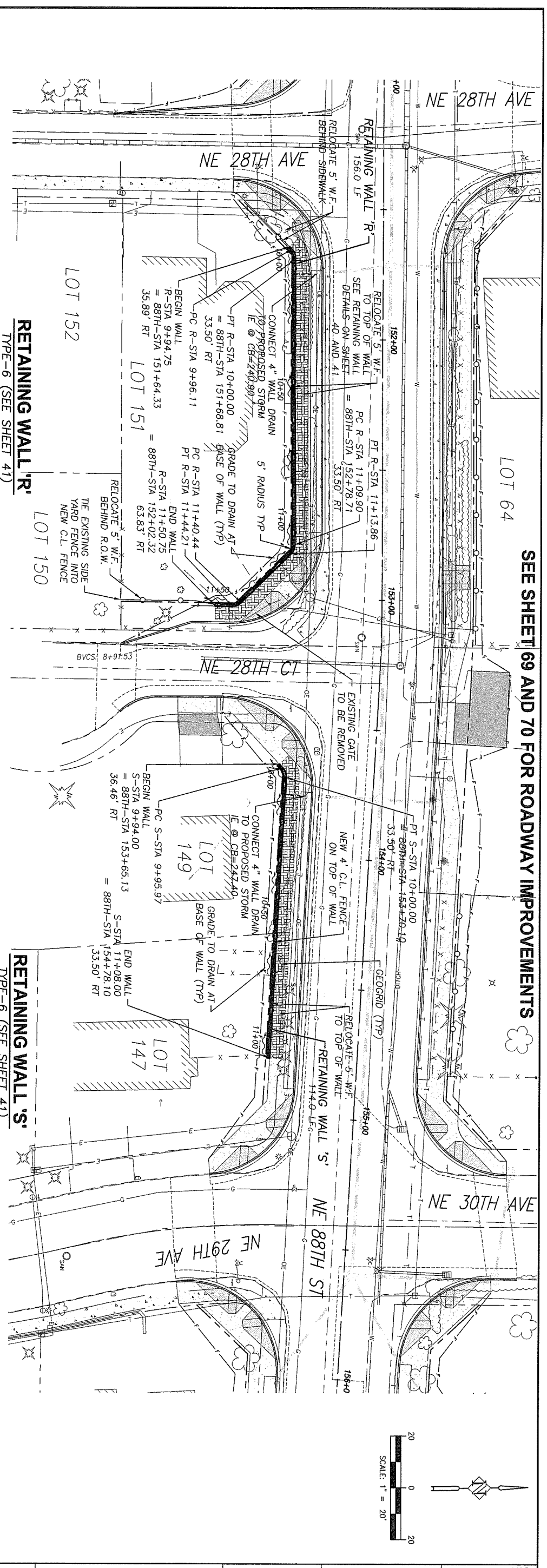

SEE SHEET 69 AND 70 FOR ROADWAY IMPROVEMENTS

RETAINING WALL 'R'
TYPE-6 (SEE SHEET 41)

RETAINING WALL 'S'
TYPE-6 (SEE SHEET 41)

FOR INFORMATIONAL PURPOSES ONLY
ALL PLAN DETAIL AND INFORMATION IS NOT SHOWN ON THIS 90% COMPLETED SET OF PLANS.
90% SUBMITTAL - JULY 2004

proud past, promising future
CLARK COUNTY WASHINGTON

DESIGN & ENGINEERING DIVISION

NE 88TH STREET
RETAINING WALL PLAN & PROFILE
WALLS 'R' & 'S'

HHPR
Harper Houf Peterson Righellis Inc.
ENGINEERS · PLANNERS · SURVEYORS
1104 MAIN STREET, SUITE 100, VANCOUVER, WA 98660
TEL 360.750.1131 www.hhpr.com FAX 360.750.1141

CALL 48 HOURS BEFORE YOU DIG
1-800-553-4344
"It's the Law"
NORTHWEST UTILITIES NOTIFICATION CENTER

DESIGNED:	KAS
DRAWN:	RAF
CRP:	330222
HOR.	1" = 20'
VERT.	1" = 5'
DATE:	7/2004
DWG:	
SHEET	50 OF 99

SEE SHEET 71 AND 72 FOR ROADWAY IMPROVEMENTS

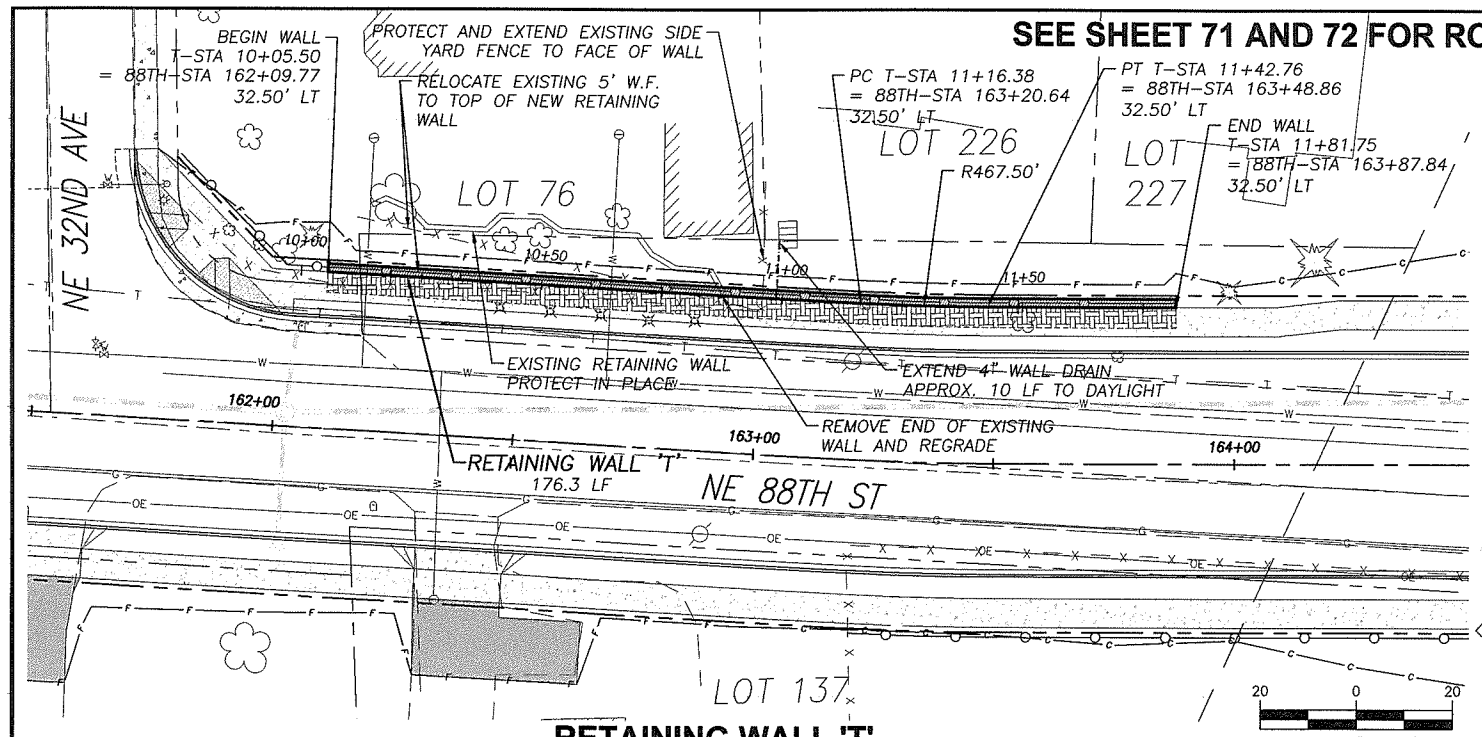

RETAINING WALL 'T'

TYPE-4 (SEE SHEET 40)

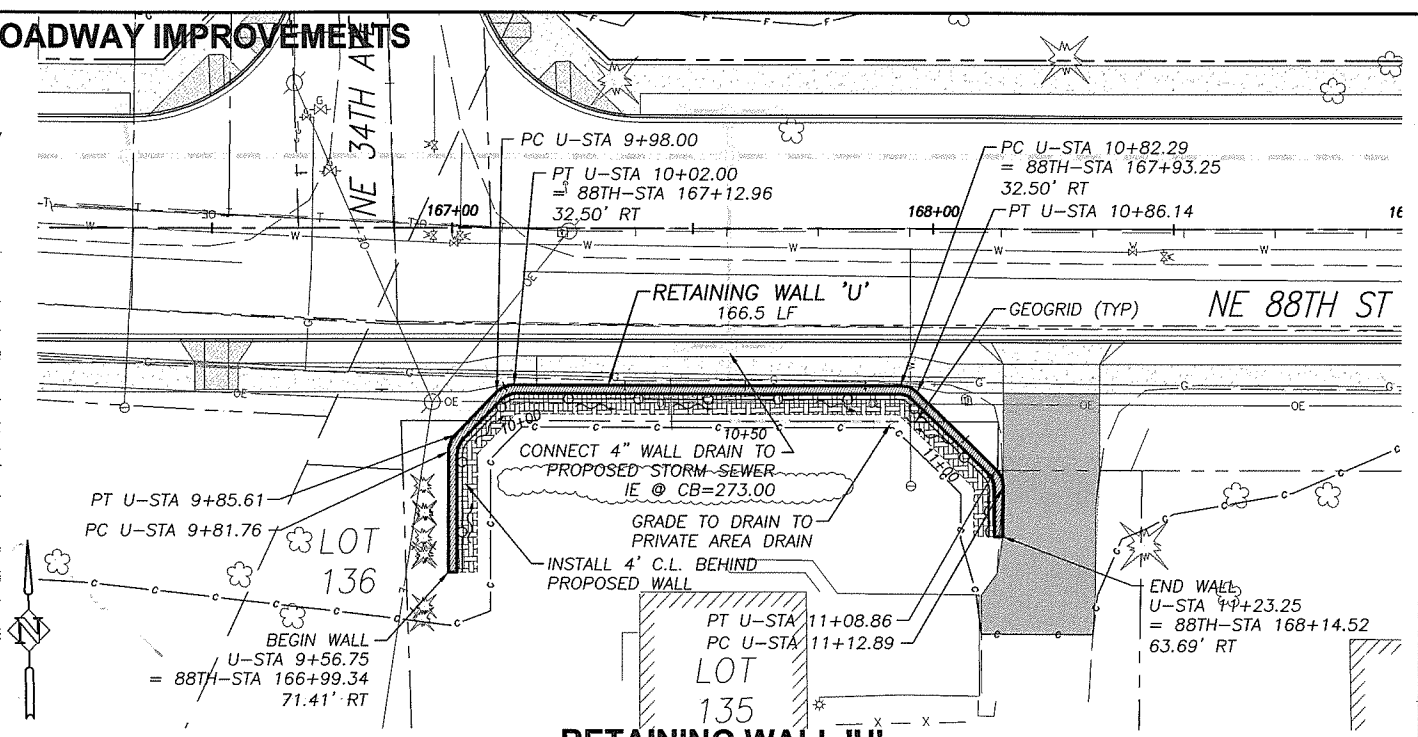

RETAINING WALL 'U'

TYPE-2 (SEE SHEET 40)

FOR INFORMATIONAL PURPOSES ONLY

ALL PLAN DETAIL AND INFORMATION IS NOT SHOWN ON THIS 90% COMPLETED SET OF PLANS.

90% SUBMITTAL - JULY 2004

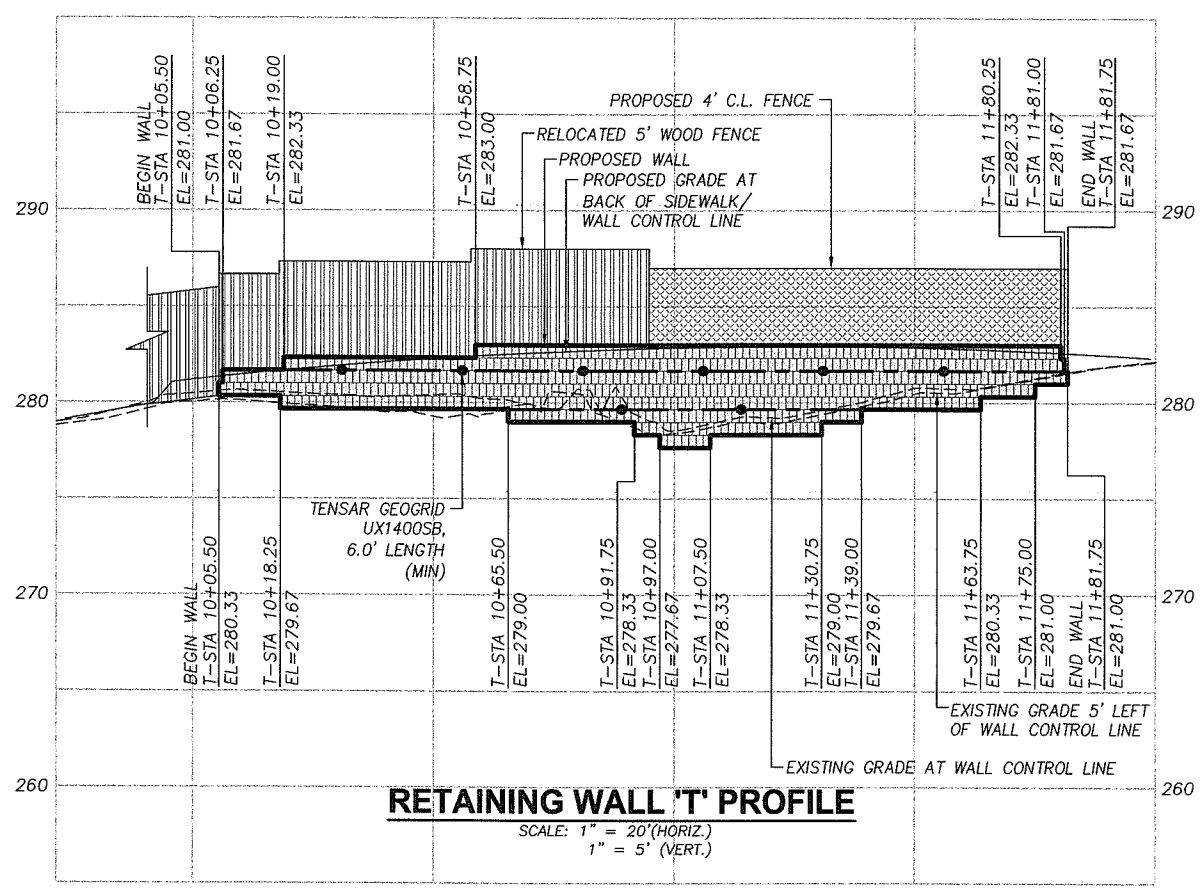

RETAINING WALL 'T' PROFILE

SCALE: 1" = 20'(HORIZ.)
1" = 5' (VERT.)

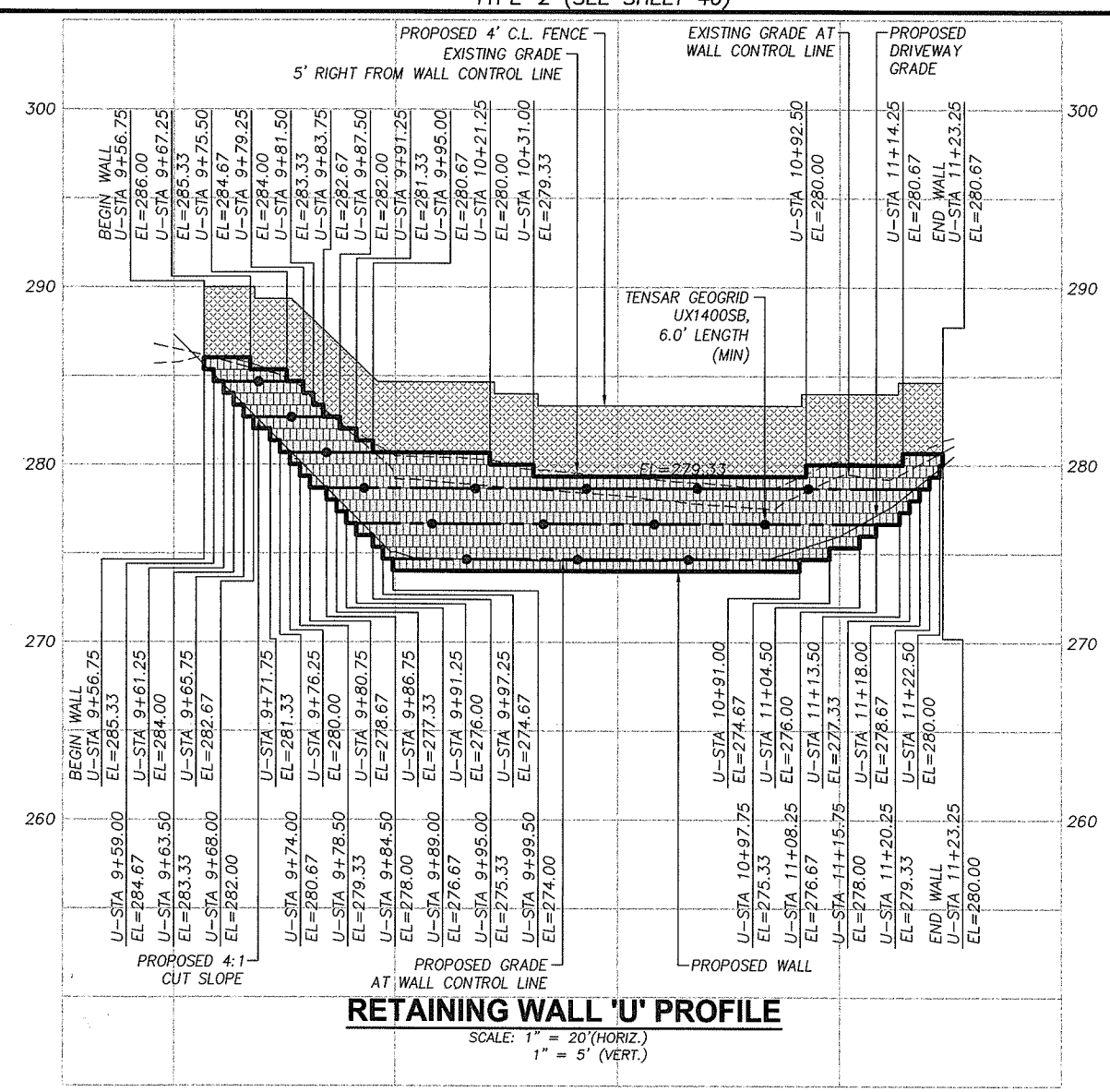

RETAINING WALL 'U' PROFILE

SCALE: 1" = 20'(HORIZ.)
1" = 5' (VERT.)

DESIGNED:	KAS
DRAWN:	RAF
CRP:	330222
HOR.	1" = 20'
VERT.	N/A
DATE:	7/2004
DWG:	SHEET 51 OF 99

CALL 48 HOURS BEFORE YOU DIG 1-800-553-4344 "It's the Law" NORTHWEST UTILITIES NOTIFICATION CENTER

Harper Houf Peterson Righellis Inc.
ENGINEERS - PLANNERS - SURVEYORS
1104 MAIN STREET, SUITE 100, VANCOUVER, WA 98660
TEL 360.750.1131 www.hhpr.com FAX 360.750.1141

DESIGN & ENGINEERING DIVISION

NE 88TH STREET
RETAINING WALL PLAN & PROFILE
WALLS 'T' & 'U'

proud past, promising future

CLARK COUNTY WASHINGTON

P:\Clk-12 (NE 88th)\CRK12-DWGS\Clk12-RW-0-U.DWG

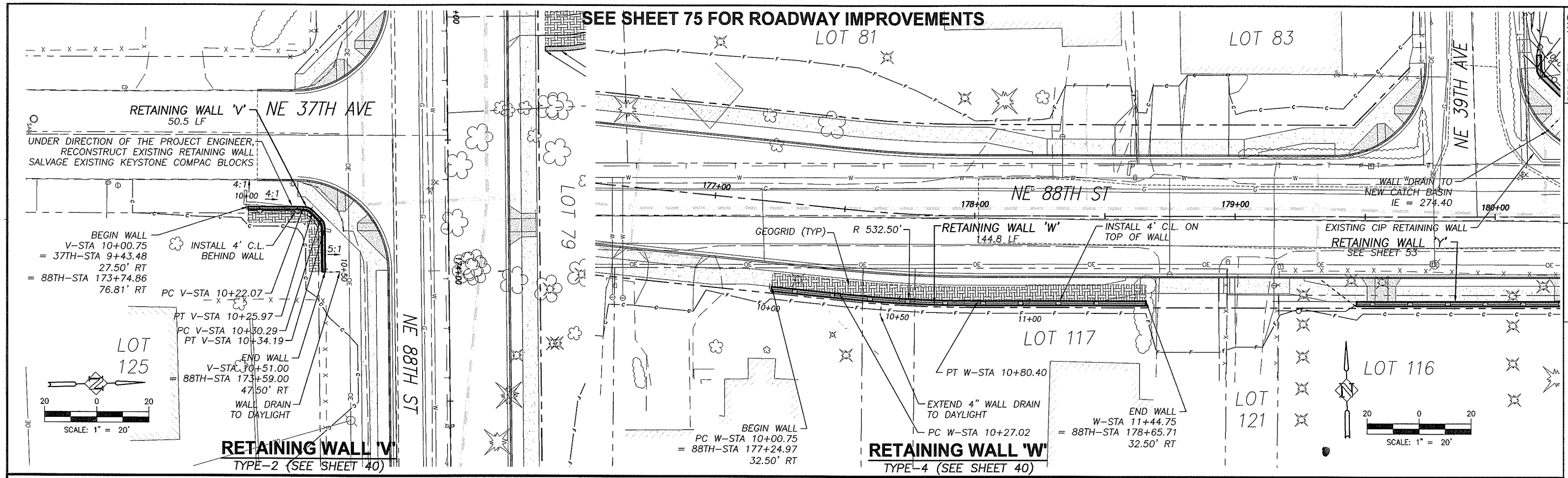

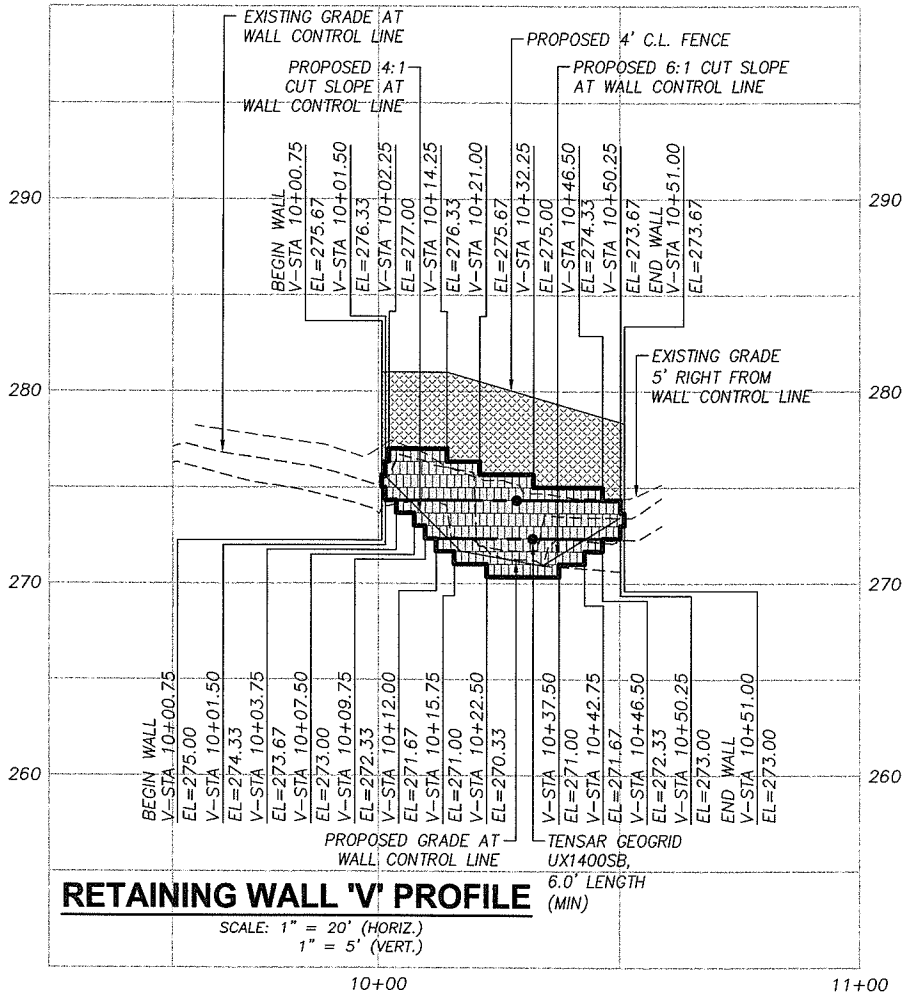

RETAINING WALL 'V' PROFILE

SCALE: 1" = 20' (HORIZ.)
1" = 5' (VERT.)

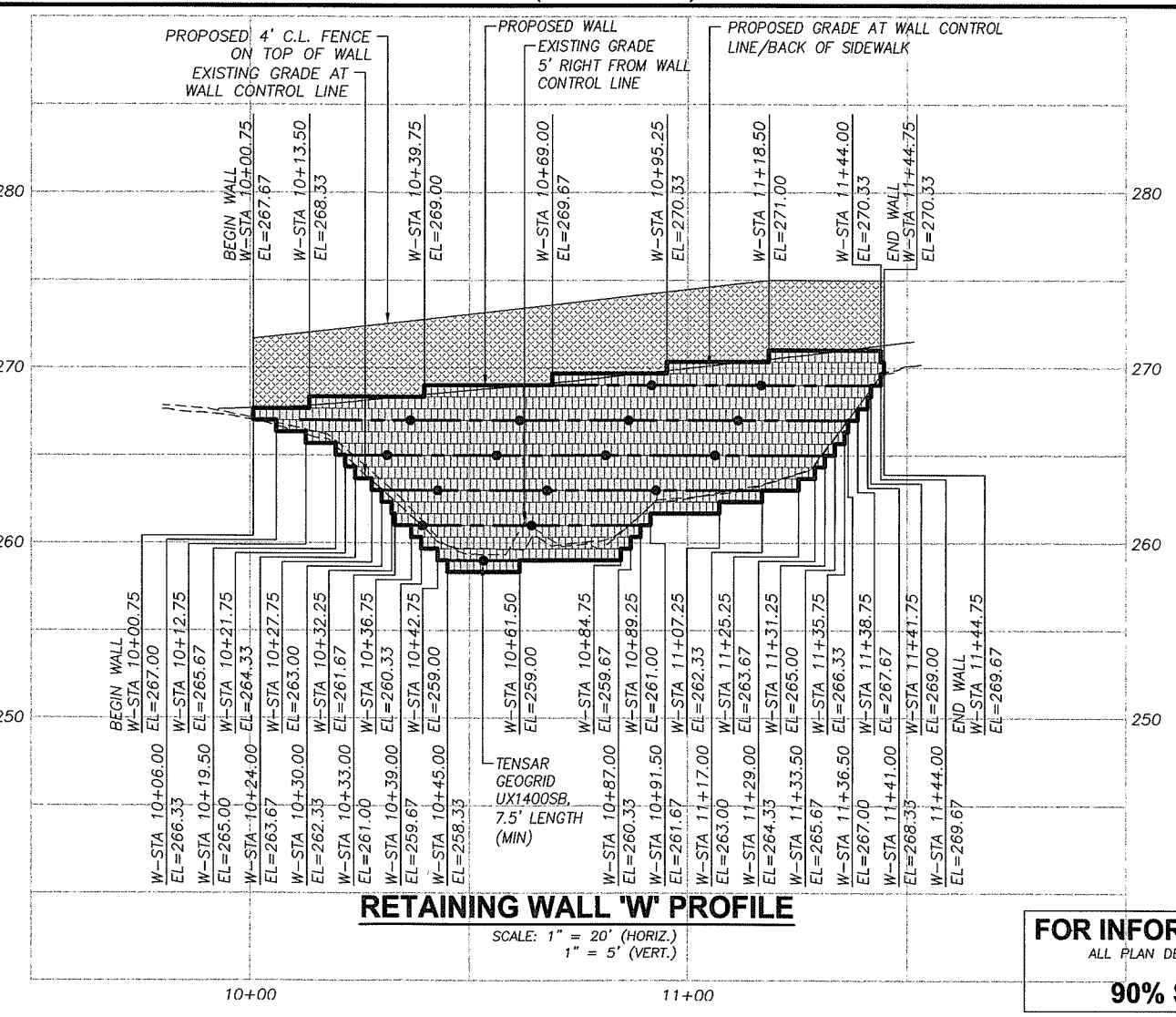

RETAINING WALL 'W' PROFILE

SCALE: 1" = 20' (HORIZ.)
1" = 5' (VERT.)

FOR INFORMATIONAL PURPOSES ONLY

ALL PLAN DETAIL AND INFORMATION IS NOT SHOWN ON THIS 90% COMPLETED SET OF PLANS.

90% SUBMITTAL - JULY 2004

DESIGNED:	KAS
DRAWN:	RAF
CRP:	330222
HOR.	1" = 20'
VERT.	N/A
DATE:	7/2004
DWG:	
SHEET	52 OF 99

CALL 48 HOURS BEFORE YOU DIG
1-800-553-4344
"It's the Law"
NORTHWEST UTILITY NOTIFICATION CENTER

Harper Houf Peterson Righellis Inc.
ENGINEERS PLANNERS SURVEYORS
1104 MAIN STREET, SUITE 100, VANCOUVER, WA 98660
TEL 360.750.1131 www.hhpr.com FAX 360.750.1141

DESIGN & ENGINEERING DIVISION

NE 88TH STREET
RETAINING WALL PLAN & PROFILE
WALLS 'V' & 'W'

proud past, promising future

CLARK COUNTY WASHINGTON

P:\Clrk-12 NE 88th\ICRK12-DWGS\ Clrk12-RW-V-B8.DWG

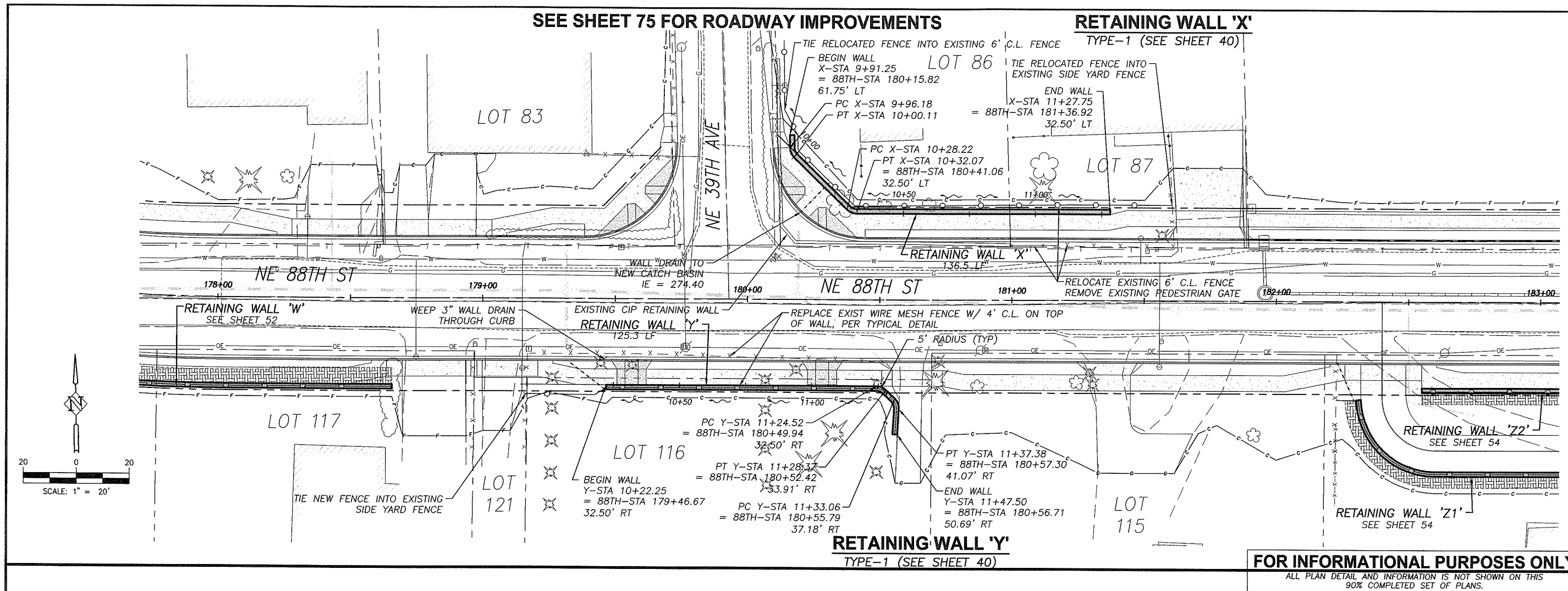

FOR INFORMATIONAL PURPOSES ONLY

ALL PLAN DETAIL AND INFORMATION IS NOT SHOWN ON THIS 90% COMPLETED SET OF PLANS.

90% SUBMITTAL - JULY 2004

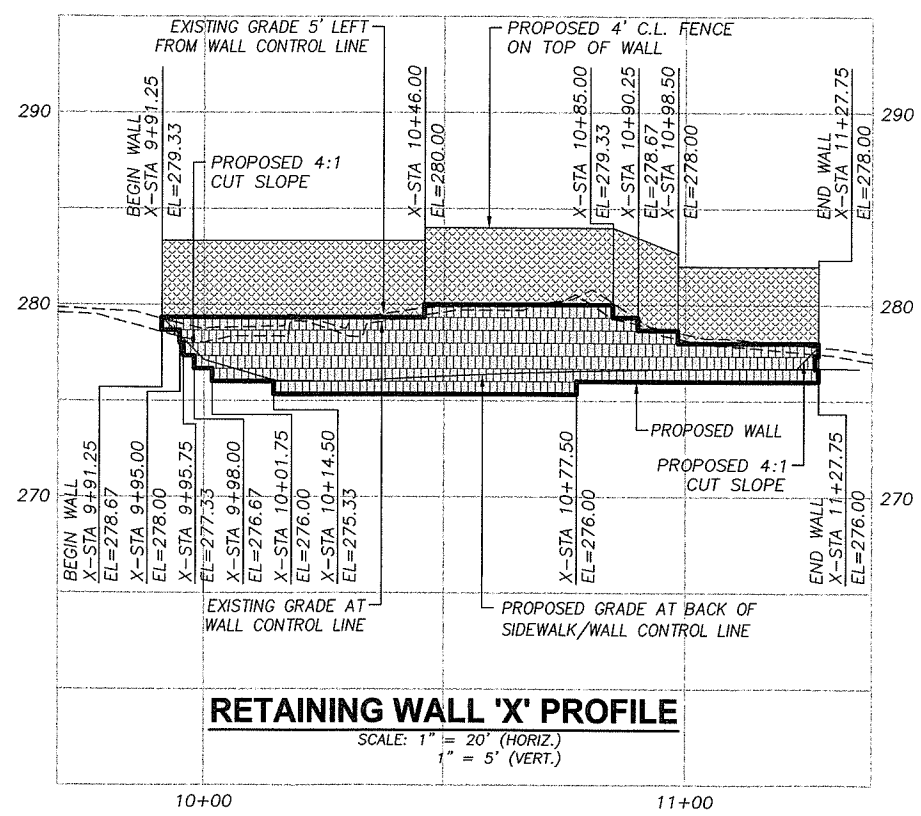

RETAINING WALL 'X' PROFILE

SCALE: 1" = 20' (HORIZ.)
1" = 5' (VERT.)

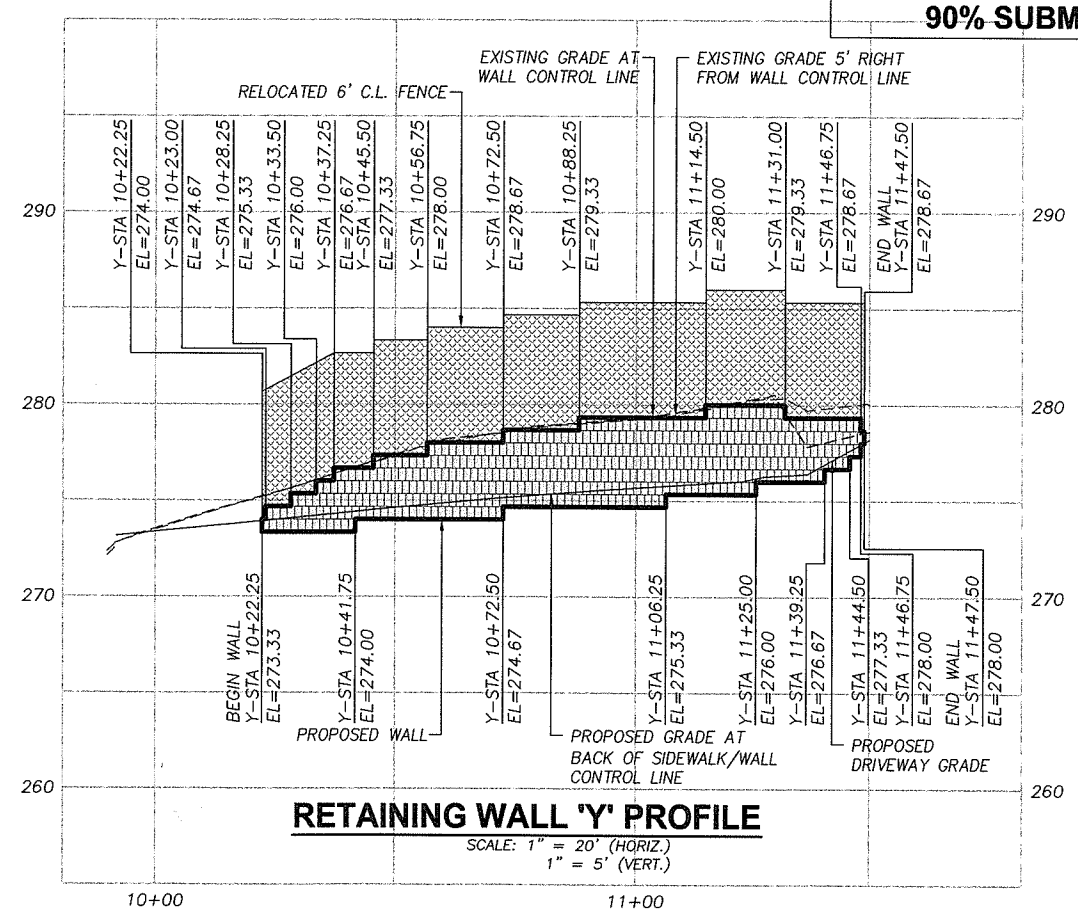

RETAINING WALL 'Y' PROFILE

SCALE: 1" = 20' (HORIZ.)
1" = 5' (VERT.)

DESIGNED:	KAS
DRAWN:	RAF
CRP:	330222
HOR.	1" = 20'
VERT.	N/A
DATE:	7/2004
DWG:	
SHEET	53 OF 99

CALL 48 HOURS BEFORE YOU DIG
1-800-553-4344
"It's the Law"
NORTHWEST UTILITIES NOTIFICATION CENTER

Harper Houf Peterson Righellis Inc.
ENGINEERS · PLANNERS · SURVEYORS
1104 MAIN STREET, SUITE 100, VANCOUVER, WA 98660
TEL 360.750.1141 www.hhpr.com FAX 360.750.1141

DESIGN & ENGINEERING DIVISION

NE 88TH STREET
RETAINING WALL PLAN & PROFILE
WALL 'X' & 'Y'

proud past, promising future
CLARK COUNTY WASHINGTON

P:\Crk-12 NE 88th\CRK12-DWGS\Crk12-RW-LB8.DWG

P:\Crk-12 (NE 88th)\CRK12-DWGS\ Crk12-RW-V-BB.DWG

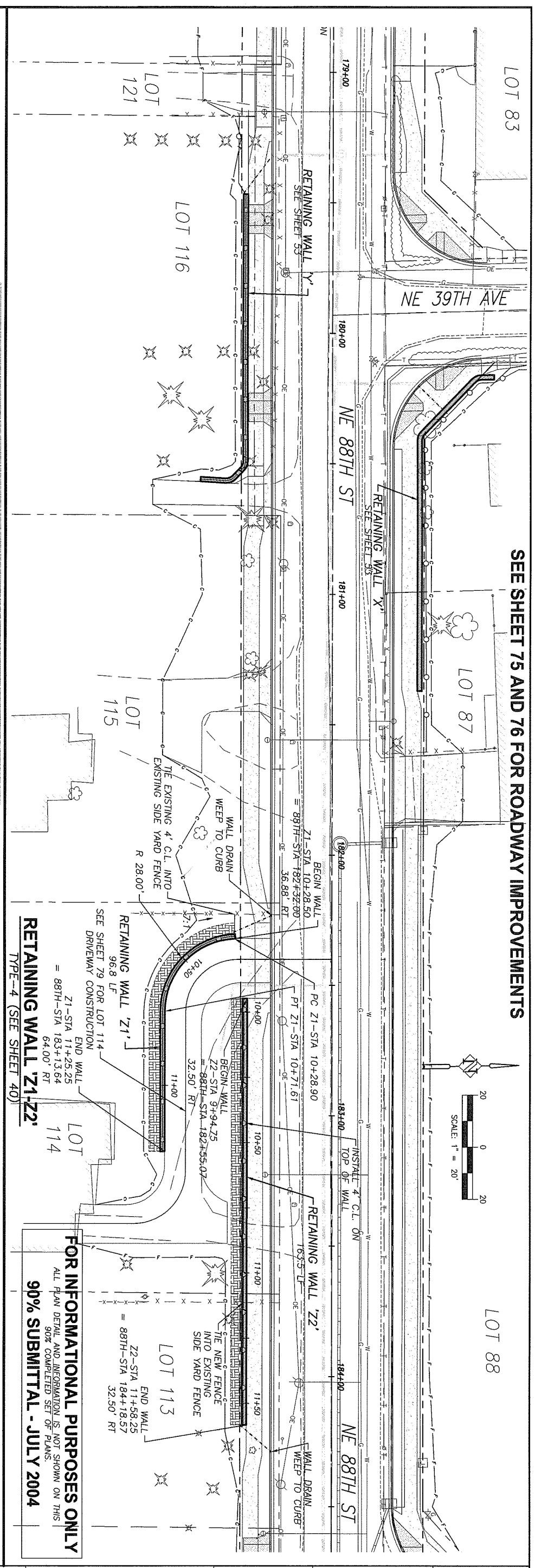

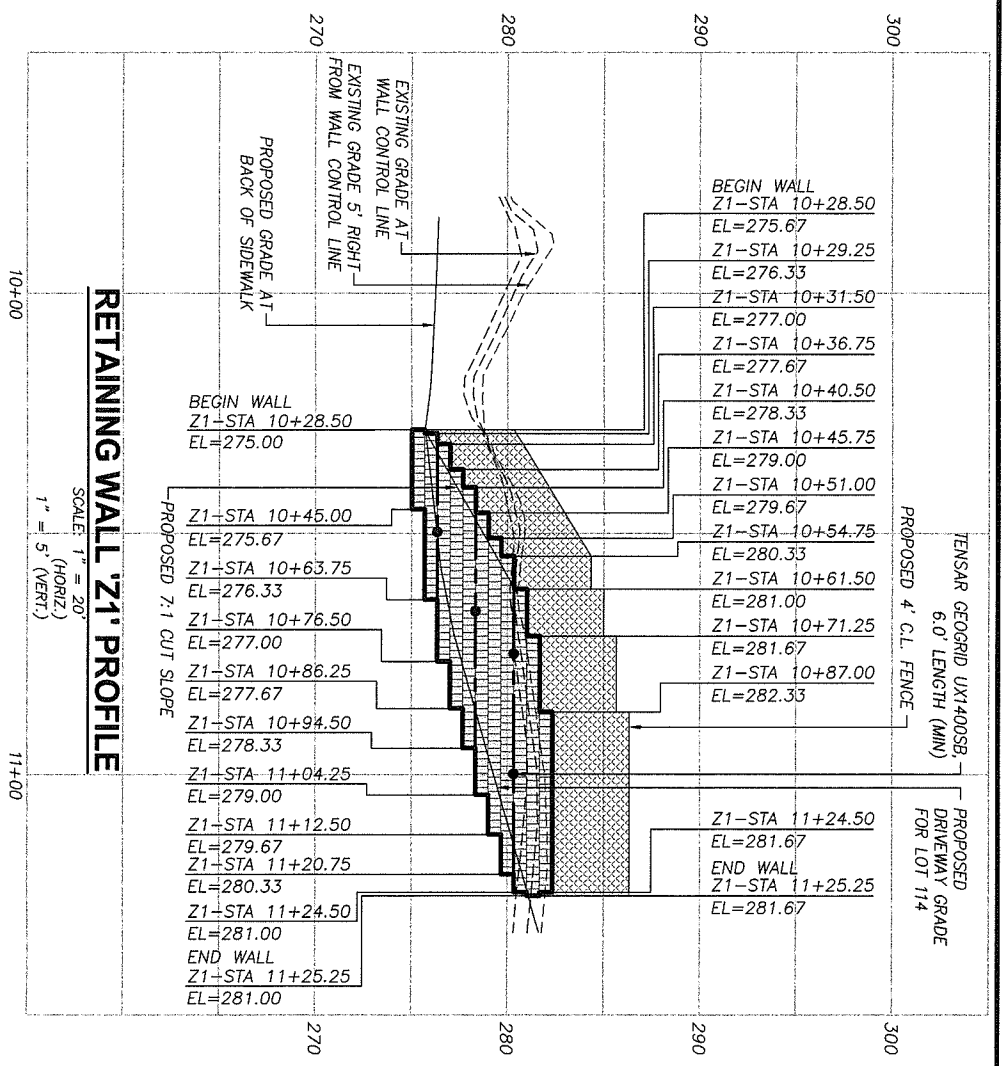

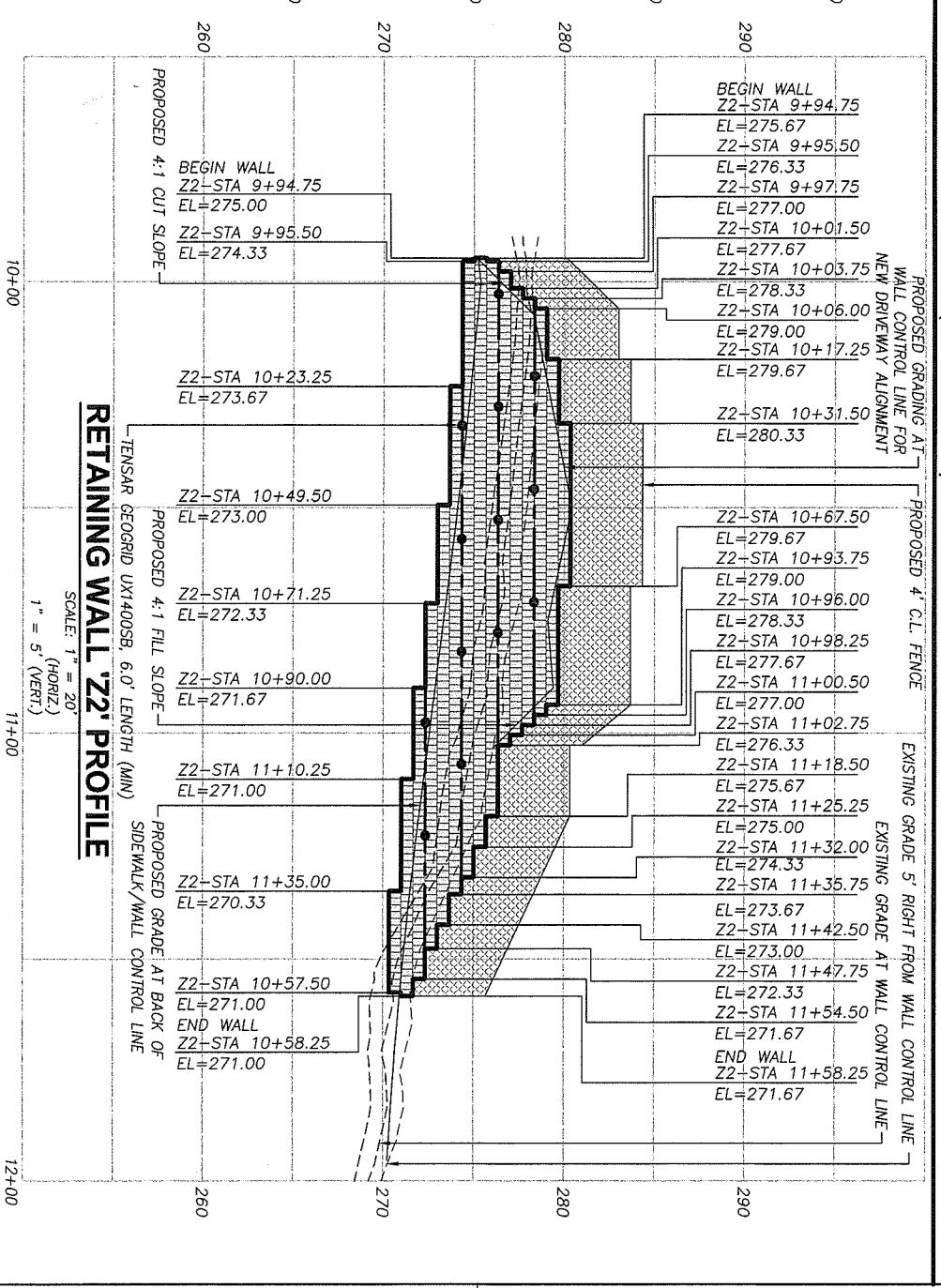

RETAINING WALL 'Z1'-'Z2'
TYPE-4 (SEE SHEET 40)

FOR INFORMATIONAL PURPOSES ONLY
ALL PLAN DETAIL AND INFORMATION IS NOT SHOWN ON THIS 90% COMPLETED SET OF PLANS.
90% SUBMITTAL - JULY 2004

proud past, promising future
CLARK COUNTY WASHINGTON

DESIGN & ENGINEERING DIVISION

NE 88TH STREET
RETAINING WALL PLAN & PROFILE
WALLS 'Z1' & 'Z2'

HHPR
Harper Houf Peterson Righellis Inc.
ENGINEERS · PLANNERS · SURVEYORS
1104 MAIN STREET, SUITE 100, VANCOUVER, WA 98660
TEL 360.750.1131 www.hhpr.com FAX 360.750.1141

CALL 48 HOURS BEFORE YOU DIG
1-800-553-4344
"It's the Law"
NORTHWEST UTILITIES NOTIFICATION CENTER

DESIGNED:	TSH
DRAWN:	NPR/RAF
CRP:	330222
HOR.	1" = 20'
VERT.	N/A
DATE:	7/2004
DWG:	
SHEET	54 OF 99

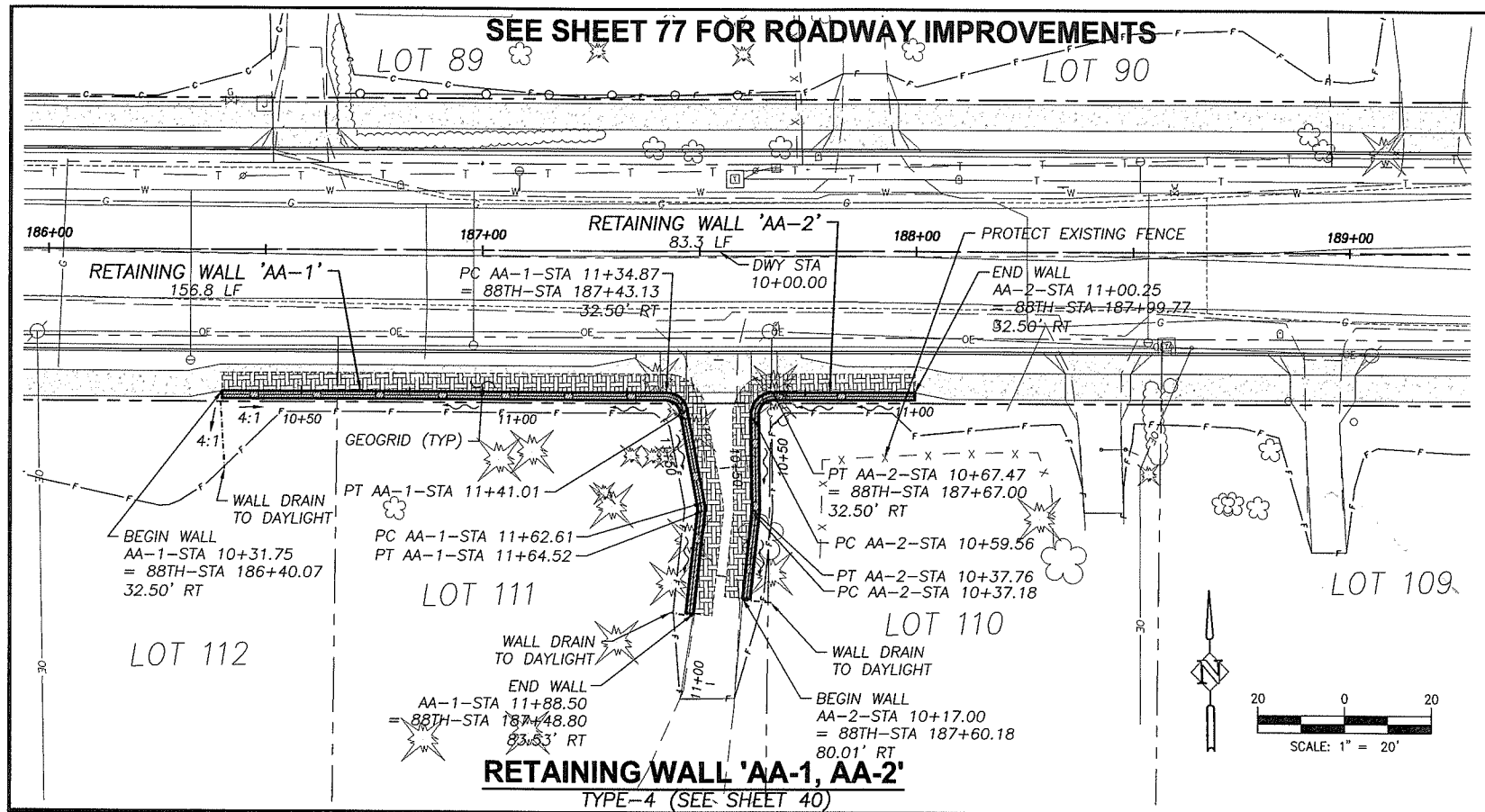

RETAINING WALL 'AA-1, AA-2'

TYPE-4 (SEE SHEET 40)

FOR INFORMATIONAL PURPOSES ONLY

ALL PLAN DETAIL AND INFORMATION IS NOT SHOWN ON THIS 90% COMPLETED SET OF PLANS.

90% SUBMITTAL - JULY 2004

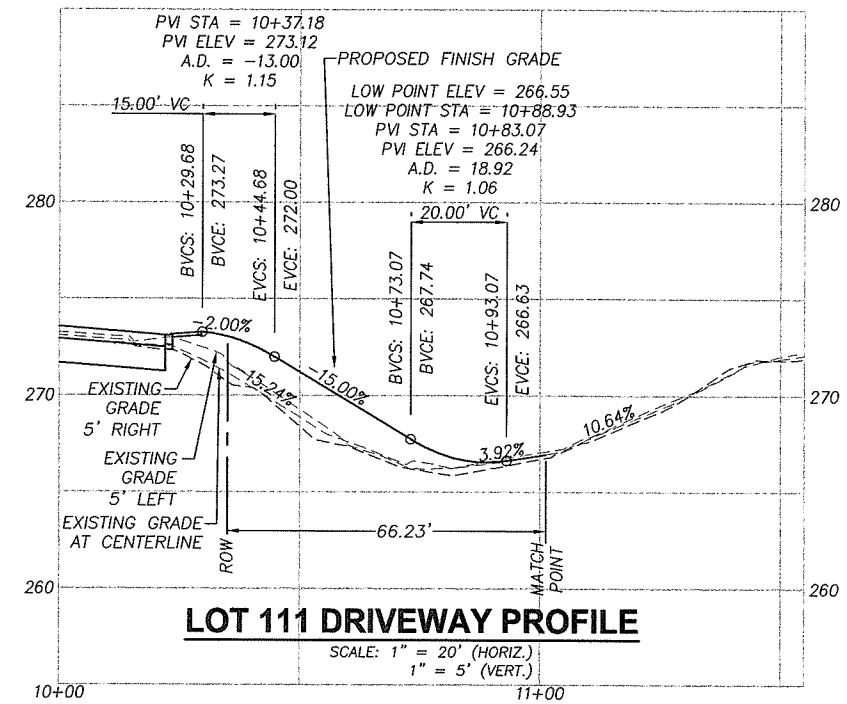

LOT 111 DRIVEWAY PROFILE

SCALE: 1" = 20' (HORIZ.)
1" = 5' (VERT.)

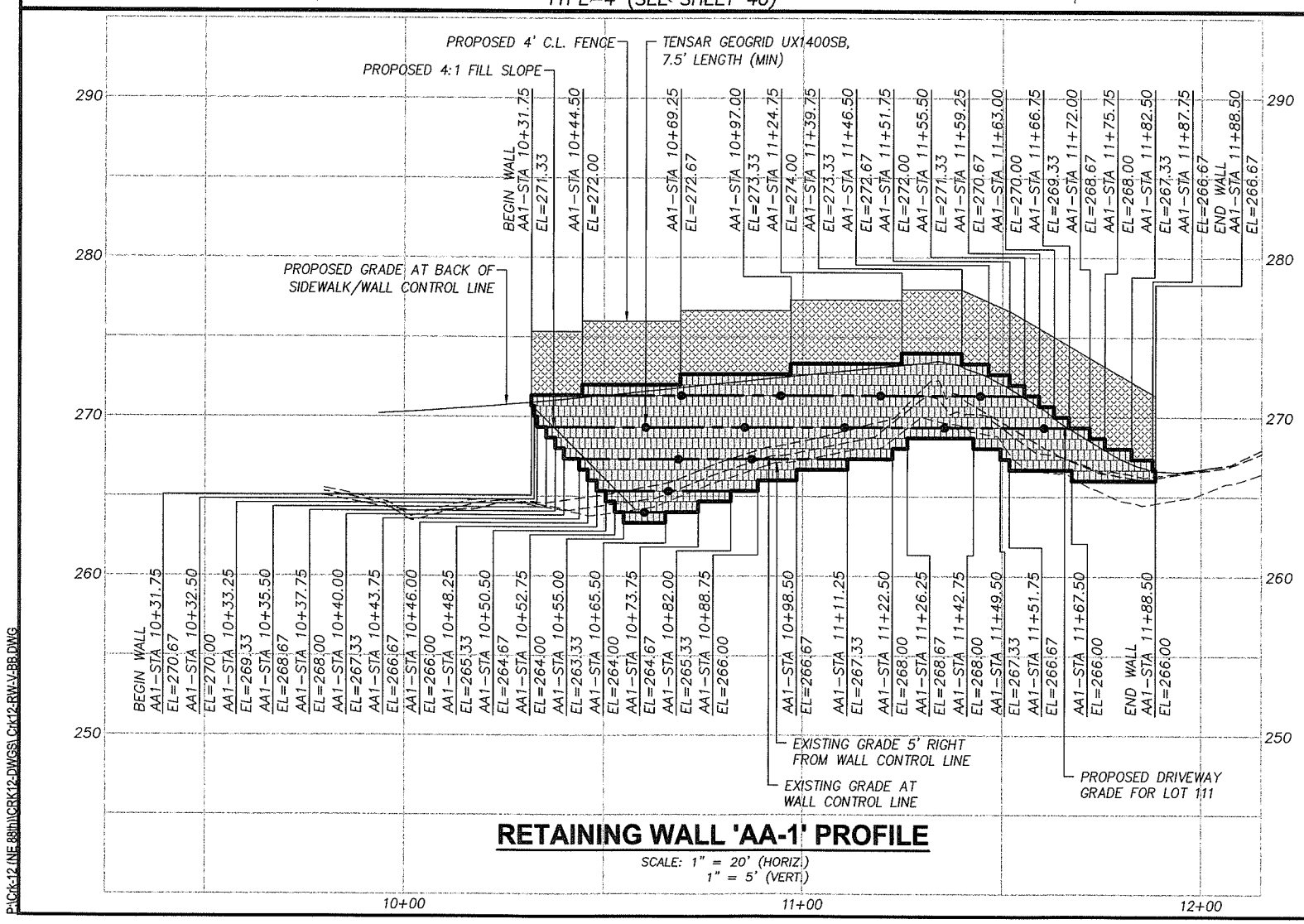

RETAINING WALL 'AA-1' PROFILE

SCALE: 1" = 20' (HORIZ.)
1" = 5' (VERT.)

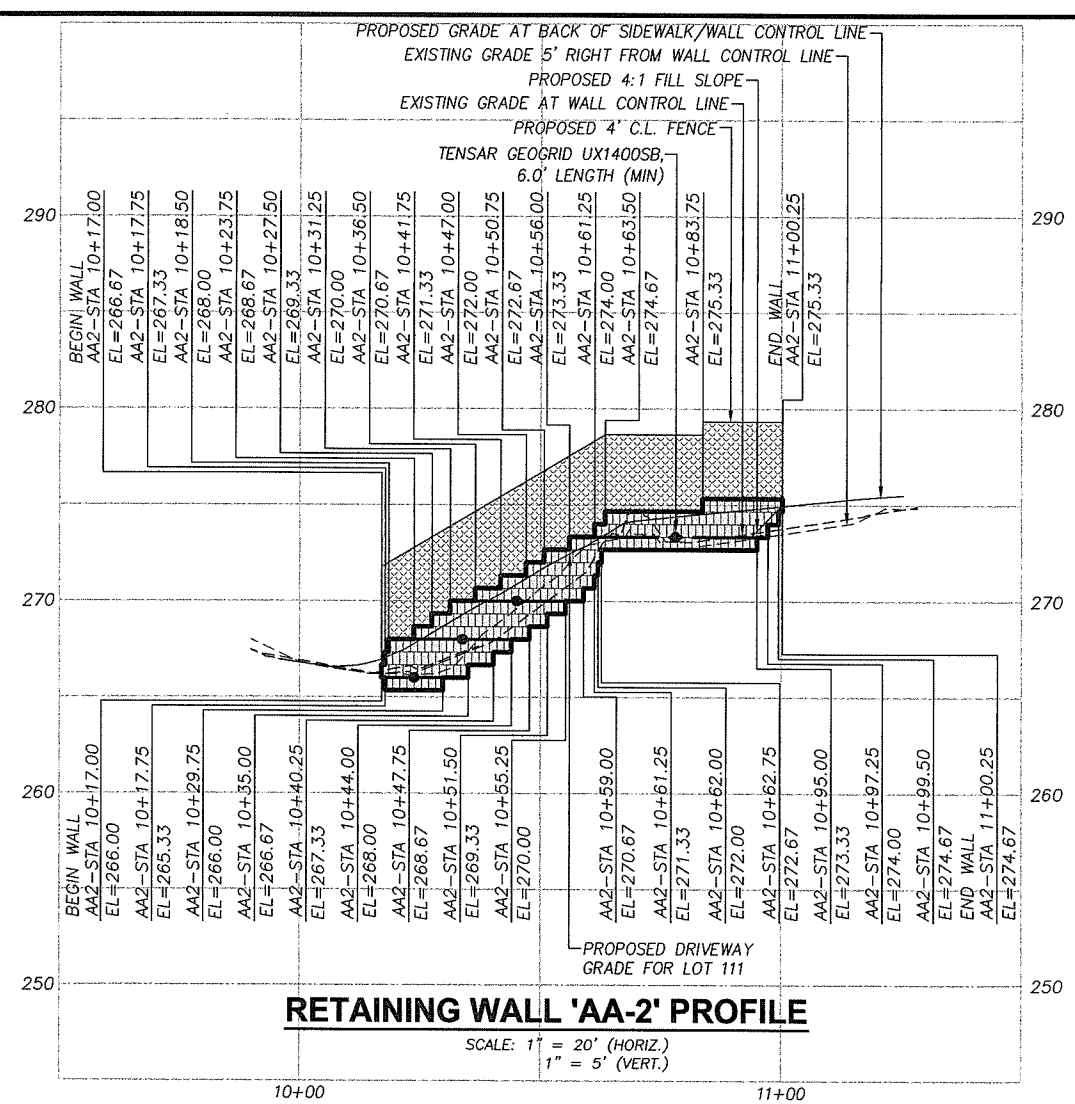

RETAINING WALL 'AA-2' PROFILE

SCALE: 1" = 20' (HORIZ.)
1" = 5' (VERT.)

DESIGNED:	TSH
DRAWN:	NPR/RAF
CRP:	330222
HOR.	1" = 20'
VERT.	N/A
DATE:	7/2004
DWG:	
SHEET	55 OF 99

CALL 48 HOURS BEFORE YOU DIG 1-800-553-4344 "It's the Law" NORTHWEST UTILITIES NOTIFICATION CENTER

Harper Houf Peterson Righellis Inc.
ENGINEERS PLANNERS SURVEYORS
1104 MAIN STREET, SUITE 100, VANCOUVER, WA 98660
TEL 360.750.1131 www.hhpr.com FAX 360.750.1141

DESIGN & ENGINEERING DIVISION

NE 88TH STREET
RETAINING WALL PLAN & PROFILE
WALLS 'AA-1', 'AA-2' & LOT 111 D/W

proud past, promising future

CLARK COUNTY WASHINGTON

P:\Crk-12 INE 88th\CRK12-DWGS\Crk12-RW-V-BB.DWG

SEE SHEET 77 AND 78 FOR ROADWAY IMPROVEMENTS

FOR INFORMATIONAL PURPOSES ONLY

ALL PLAN DETAIL AND INFORMATION IS NOT SHOWN ON THIS 90% COMPLETED SET OF PLANS.

90% SUBMITTAL - JULY 2004

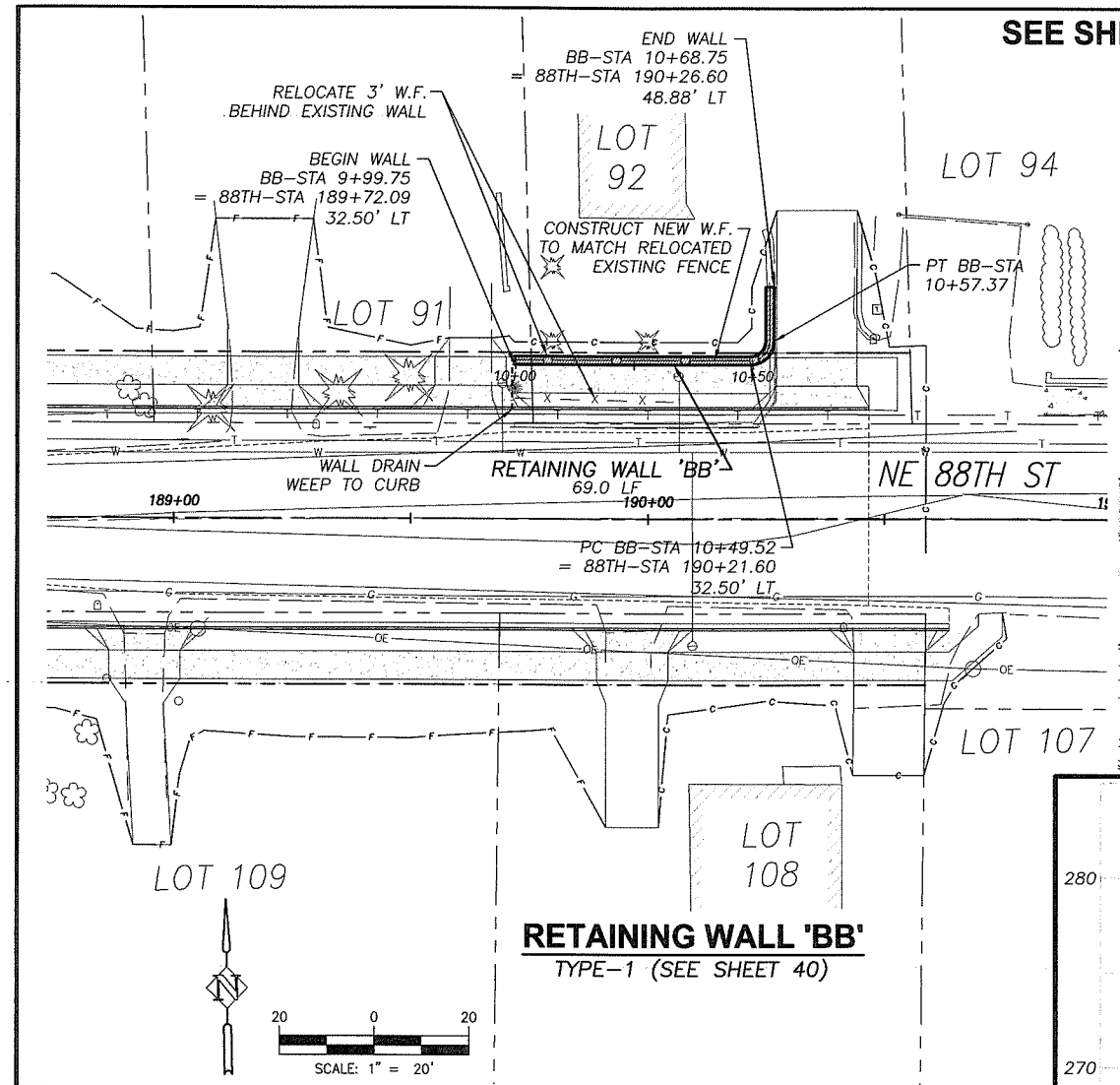

RETAINING WALL 'BB'

TYPE-1 (SEE SHEET 40)

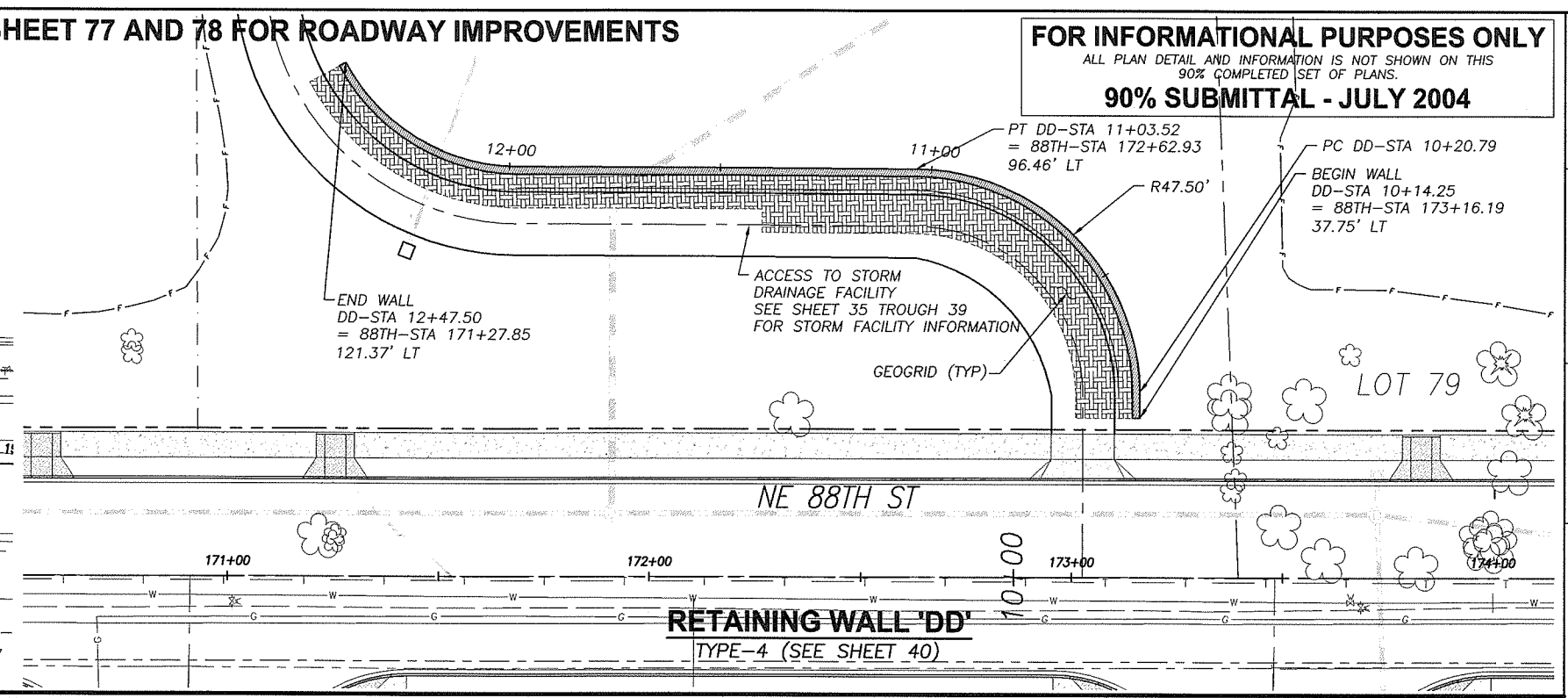

RETAINING WALL 'DD'

TYPE-4 (SEE SHEET 40)

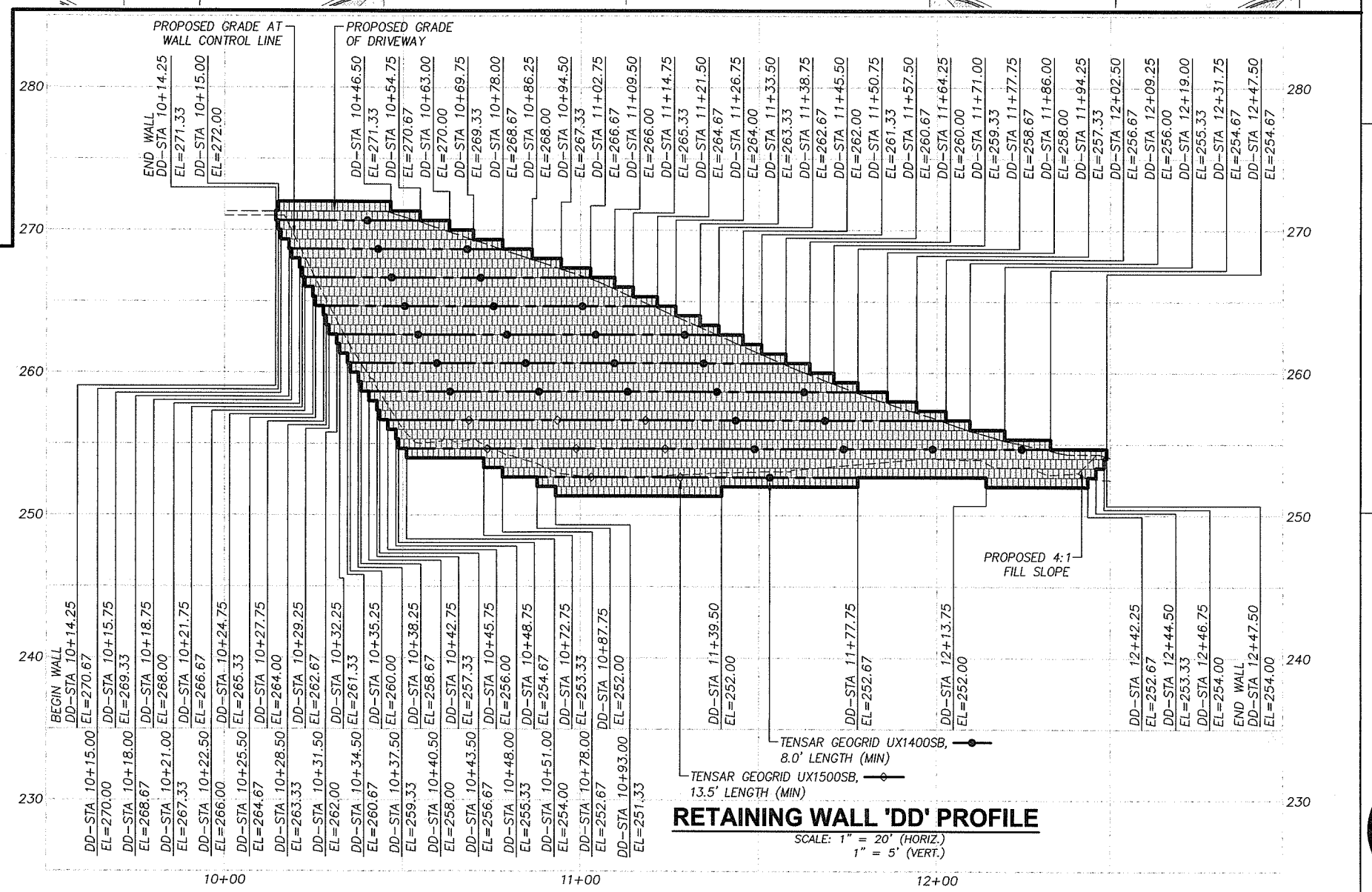

RETAINING WALL 'DD' PROFILE

SCALE: 1" = 20' (HORIZ.)
1" = 5' (VERT.)

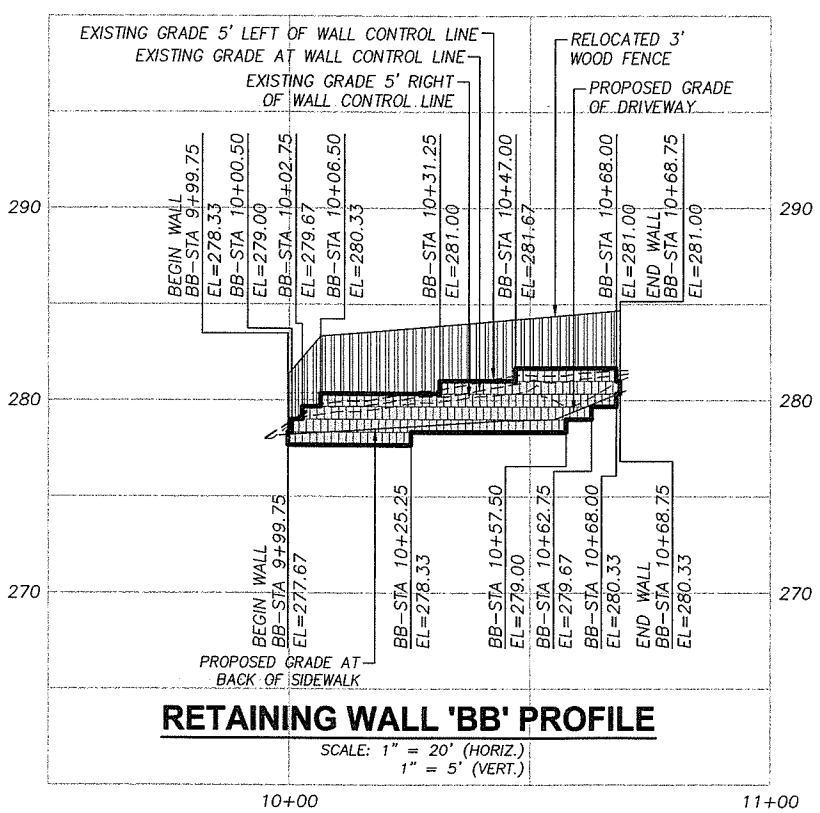

RETAINING WALL 'BB' PROFILE

SCALE: 1" = 20' (HORIZ.)
1" = 5' (VERT.)

DESIGNED:	AMG
DRAWN:	RAF
CRP:	330222
HOR.	1" = 20'
VERT.	N/A
DATE:	7/2004
DWG:	
SHEET	56 OF 99

CALL 48 HOURS BEFORE YOU DIG
1-800-553-4344
"It's the Law"
NORTHWEST UTILITIES NOTIFICATION CENTER

Harper Houf Peterson Righellis Inc.
ENGINEERS PLANNERS SURVEYORS
1104 MAIN STREET, SUITE 100 VANCOUVER, WA 98660
TEL 360.750.1131 www.hhpr.com FAX 360.750.1141

DESIGN & ENGINEERING DIVISION

NE 88TH STREET
RETAINING WALL PLAN & PROFILE
WALL 'BB' & 'DD'

proud past, promising future

CLARK COUNTY WASHINGTON

P:\Clk-12 (NE 88th)\CRK12-DWGS\Clrk12-RW-1-BB.DWG

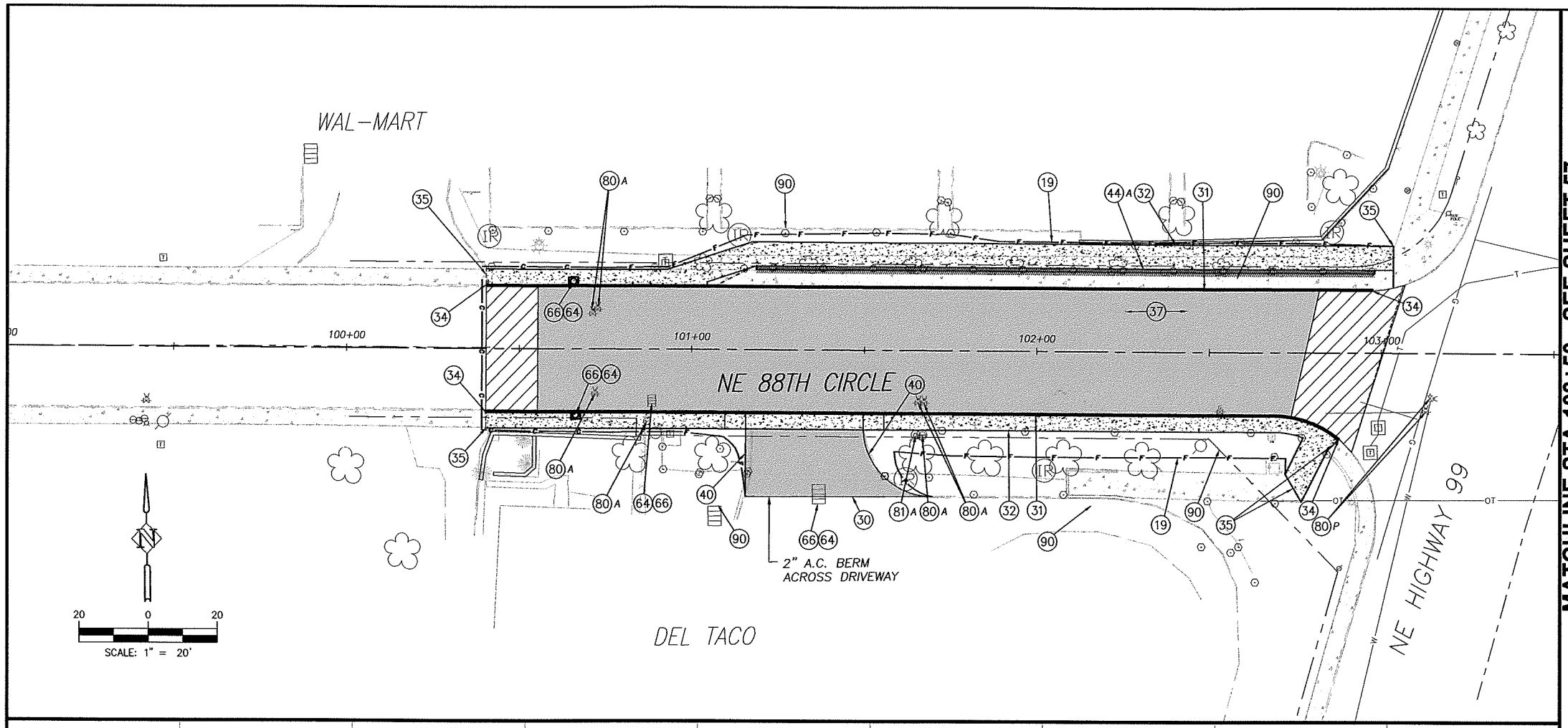

MATCHLINE STA 103+50 - SEE SHEET 57

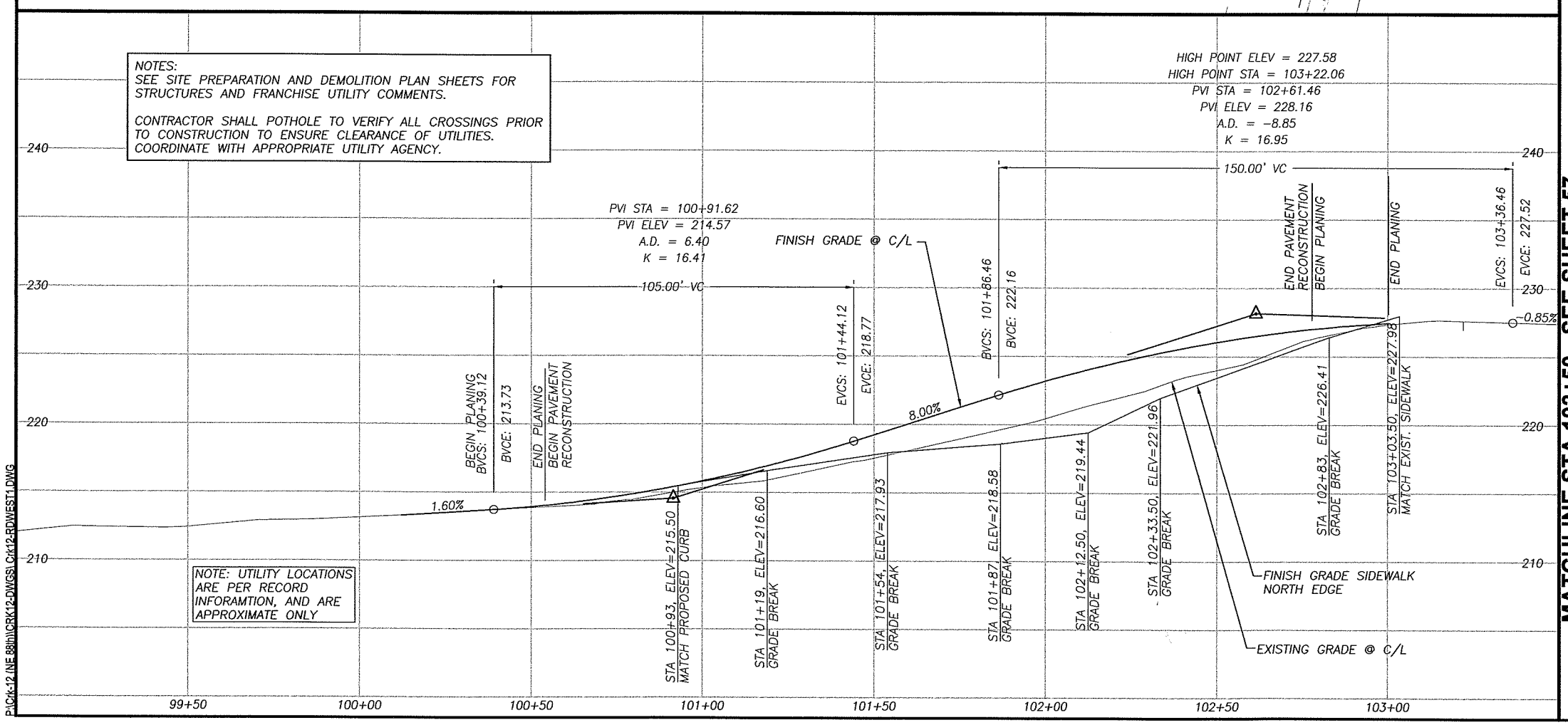

MATCHLINE STA 103+50 - SEE SHEET 57

CONSTRUCTION NOTES:

(10) TELEPHONE RISERS AND/OR POLES TO BE REMOVED OR RELOCATED BY OTHERS, UNLESS OTHERWISE NOTED WITH (P) PROTECT. TELEPHONE CABLE TO BE ABANDONED. COORDINATE WORK WITH RON IMAI, US WEST, BY CALLING (360) 699-3546.

(19) LIMITS OF GRADING

(30) CONSTRUCT DRIVEWAY PER DETAIL AND "DRIVEWAY APPROACH SCHEDULE" TABLE ON SHEET 11.

(31) CONSTRUCT CONCRETE CURB AND GUTTER PER DETAIL SHEET 12.

(32) CONSTRUCT CONCRETE SIDEWALK PER DETAIL SHEET 14.

(33) CONSTRUCT CONCRETE CURB RAMP OF TYPE NOTED PER DETAIL SHEET 14.

(34) MATCH NEW CURB TO EXISTING CURB. CURB GRADES ARE BASED ON A 0.5' EXPOSURE. TRANSITION CURB EXPOSURE ON NEW CURB TO MATCH EXISTING CURB AT LEAST 3-FEET PRIOR TO MATCH POINT. IF NECESSARY, SAWCUT EXISTING CURB TO CREATE A CLEAN, UNDISTURBED EDGE.

(35) MATCH NEW SIDEWALK TO EXISTING SIDEWALK. TRANSITION NEW SIDEWALK WIDTH/LOCATION TO MATCH EXISTING WIDTH/LOCATION AT 5:1 PRIOR TO MATCH LINE. IF NECESSARY, SAWCUT EXISTING SIDEWALK TO CREATE A CLEAN, UNDISTURBED EDGE.

(36) CONSTRUCT 6'X6' A.C. LEVEL LANDING AND 6' TRANSITION RAMP FROM END OF SIDEWALK TO SHOULDER. 0.25' MIN CLASS 'A' A.C. OVER 0.4' CRUSHED ROCK.

(37) CONSTRUCT A.C. PAVEMENT RECONSTRUCTION/WIDENING. REFER TO TYPICAL SECTIONS ON SHEETS 8.

(38) CONSTRUCT A.C. OVERLAY. REFER TO TYPICAL SECTIONS ON SHEETS 8.

(39) RELOCATE (R), PROTECT (P), OR ADJUST (A) EXISTING TRAFFIC SIGNAL POLE, PER TRAFFIC SIGNAL PLANS, SHEETS 94 TO 99.

(40) CONSTRUCT EXTRUDED CURB PER CLARK COUNTY STD. DRAWING F18A.

(42) INSTALL FENCE AT LOCATIONS NOTED ON THE PLANS OR AS DIRECTED IN THE FIELD. SEE TYPICAL SECTION ON SHEET 12.

(43) INSTALL FENCE ON RETAINING WALL. SEE RETAINING WALL TABLES FOR DETAILS.

(44) CONSTRUCT RETAINING WALL PER PLAN AND PROFILE ON SHEET 42 TO 56. SEE TYPICAL DETAILS ON SHEETS 40 AND 41.

(54) CONSTRUCT STD. STORM MANHOLE, TYPE 1 WITH STANDARD MANHOLE RING AND COVER PER DETAIL SHEET 17.

(55) CONSTRUCT STD. OVERSIZED STORM MANHOLE, TYPE 2 WITH STANDARD MANHOLE RING AND COVER PER DETAIL SHEET 17.

(56) CONSTRUCT STD. FLAT TOP STORM MANHOLE, TYPE 3 WITH STANDARD MANHOLE RING AND COVER PER DETAIL SHEET 17

(57) CONSTRUCT PRIVATE CATCH BASIN PER DETAIL ON SHEET 19. INSTALL STORM PIPE AS SHOWN AND PER "STORM DRAINAGE DATA" INFORMATION TABLE THIS SHEET.

(58) CONSTRUCT TYPE 1 COMBINATION CURB INLET PER DETAIL ON SHEET 18. INSTALL STORM PIPE AS SHOWN AND PER "STORM DRAINAGE DATA" INFORMATION TABLE THIS SHEET.

(59) CONSTRUCT CATCH BASIN PER DETAIL ON SHEET 18.

(60) CONSTRUCT DITCH INLET PER DETAIL ON SHEET 19. INSTALL STORM PIPE AS SHOWN AND PER "STORM DRAINAGE DATA" INFORMATION TABLE THIS SHEET.

(61) INSTALL STORM PIPE.

(62) INSTALL TRENCH DRAIN AND STORM PIPE. SEE DETAILS ON SHEET 19.

(63) REMOVE EXISTING STORM SEWER PIPE AND/OR STRUCTURES. BACKFILL AND COMPACT VOID LEFT FROM EXISTING PIPE AS NECESSARY.

(64) EXISTING STORM PIPE AND/OR STRUCTURE TO REMAIN.

(65) PLUG AND ABANDON EXISTING STORM PIPE.

(66) ADJUST EXISTING MANHOLE CASTING WITH ADJUSTING RINGS/CATCH BASIN/VALVE BOX RIM TO FINISH GRADE.

(67) CONNECT TO EXISTING STORM PIPE OR STRUCTURE PER DETAIL ON SHEET 19.

(68) INSTALL STORM FILTER VAULT. SEE DETAIL SHEET 38.

(69) CONSTRUCT TYPE 1 CURB INLET PER DETAIL ON SHEET 18. INSTALL STORM PIPE AS SHOWN AND PER "STORM DRAINAGE DATA" INFORMATION TABLE THIS SHEET.

(73) CONSTRUCT ROADSIDE DITCH, GRADE TO DRAIN TO INLET.

(80) RELOCATE (R), PROTECT (P) ADJUST (A) EXISTING SANITARY SEWER CLEANOUT, WATER VALVE OR WATER METER BOX AND/OR SERVICE AS REQUIRED AND DIRECTED. ALL DISTURBED SERVICE LINES SHALL BE REPAIRED AS REQUIRED.

(81) EXISTING FIRE HYDRANT TO BE RELOCATED (R), PROTECTED (P), OR ADJUSTED (A). COORDINATE WITH CLARK PUBLIC UTILITIES.

(82) PROTECT EXISTING WATER LINE.

(90) RELOCATE (R), PROTECT (P), OR ADJUST (A) EXISTING IRRIGATION AS REQUIRED AND DIRECTED. ALL DISTURBED IRRIGATION SHALL BE REPAIRED AS REQUIRED.

(91) ADJUST EXISTING SANITARY OR STORM MANHOLE TO FINISH GRADE BY REMOVING CONE SECTION AND ADDITNG FULL MANHOLE SECTION.

(92) EXTEND EXISTING SEWER LATERAL TO PROPOSED R/W LINE AND INSTALL CLEANOUT.

(93) PROTECT OR REMOVE EXISTING SEPTIC SYSTEM AND INSTALL NEW SEWER SERVICE TO PROPERTY AS DIRECTED BY ENGINEER.

FOR INFORMATIONAL PURPOSES ONLY

ALL PLAN DETAIL AND INFORMATION IS NOT SHOWN ON THIS 90% COMPLETED SET OF PLANS.

90% SUBMITTAL - JULY 2004

DESIGNED:	TSH
DRAWN:	NPR/RAF
CRP:	330222
HOR.	1" = 20'
VERT.	1" = 5'
DATE:	7/2004
DWG:	
SHEET	57 OF 99

CALL 48 HOURS BEFORE YOU DIG
1-800-553-4344
"It's the Law"
NORTHWEST UTILITIES NOTIFICATION CENTER

Harper Houf Peterson Righellis Inc.
ENGINEERS · PLANNERS · SURVEYORS
1104 Main Street, Suite 100, Vancouver, WA 98660
TEL 360.750.1131 www.hhpr.com FAX 360.750.1141

DESIGN & ENGINEERING DIVISION

NE 88TH STREET
STA 100+00 TO STA 103+50

proud past, promising future

CLARK COUNTY WASHINGTON

P:\Clk-12 (NE 88th)\CRK12-DWGS\ Crk12-RDWEST1.DWG

MATCHLINE STA 103+50 - SEE SHEET 56

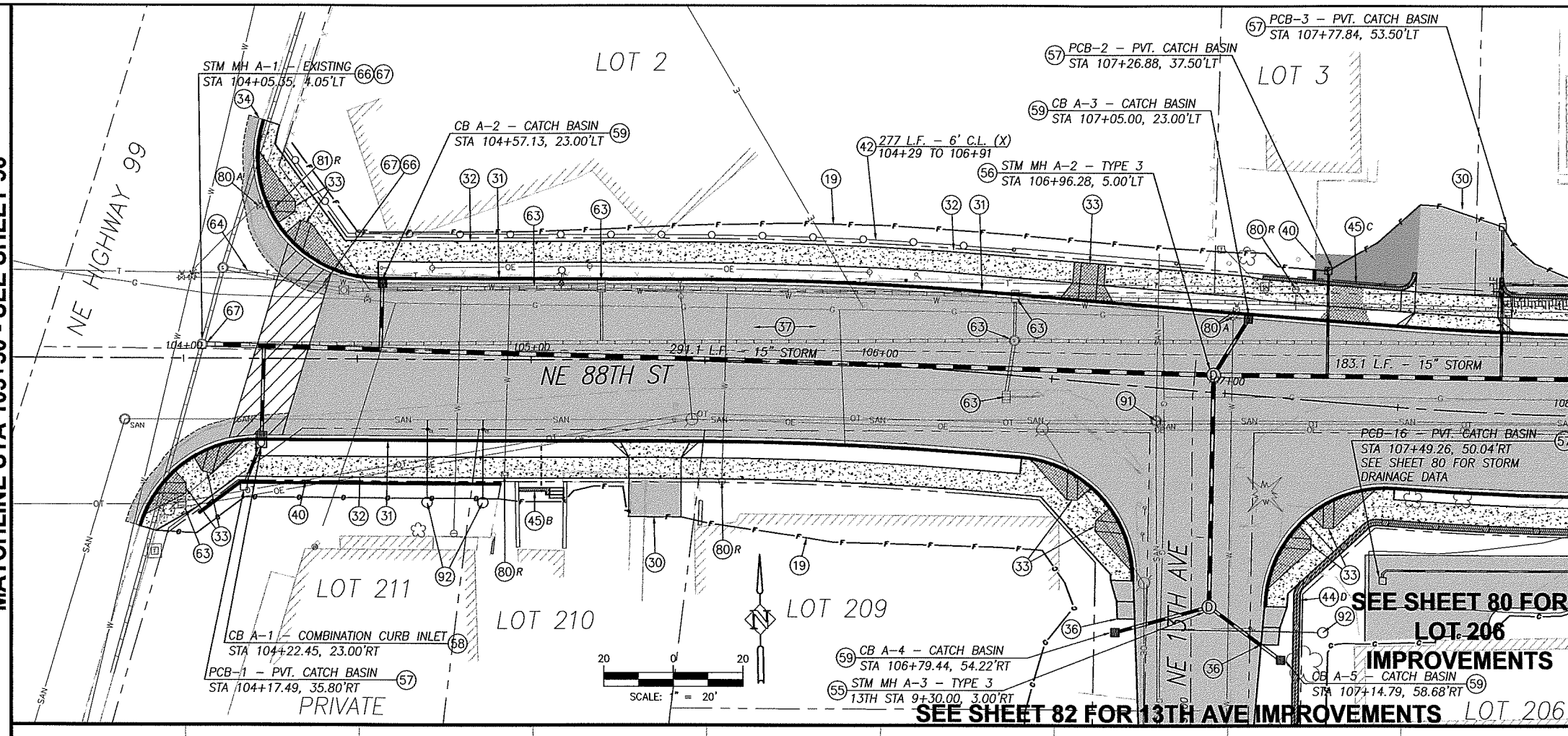

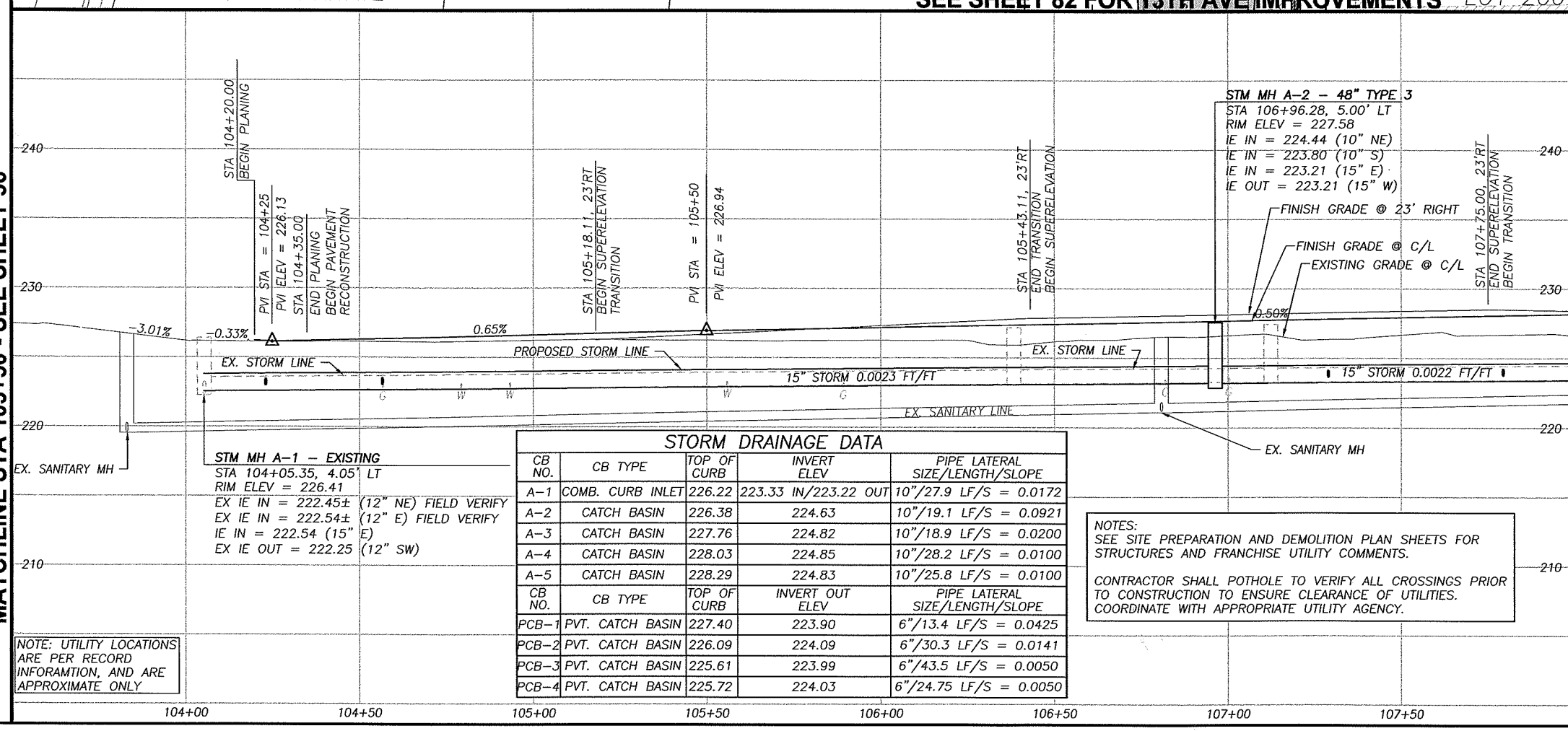

STM MH A-1 - EXISTING
STA 104+05.35, 4.05' LT
RIM ELEV = 226.41
EX IE IN = 222.45± (12" NE) FIELD VERIFY
EX IE IN = 222.54± (12" E) FIELD VERIFY
IE IN = 222.54 (15" E)
EX IE OUT = 222.25 (12" SW)

NOTE: UTILITY LOCATIONS ARE PER RECORD INFORAMTION, AND ARE APPROXIMATE ONLY

STORM DRAINAGE DATA

CB NO.	CB TYPE	TOP OF CURB	INVERT ELEV	PIPE LATERAL SIZE/LENGTH/SLOPE
A-1	COMB. CURB INLET	226.22	223.33 IN/223.22 OUT	10"/27.9 LF/S = 0.0172
A-2	CATCH BASIN	226.38	224.63	10"/19.1 LF/S = 0.0921
A-3	CATCH BASIN	227.76	224.82	10"/18.9 LF/S = 0.0200
A-4	CATCH BASIN	228.03	224.85	10"/28.2 LF/S = 0.0100
A-5	CATCH BASIN	228.29	224.83	10"/25.8 LF/S = 0.0100
CB NO.	CB TYPE	TOP OF CURB	INVERT OUT ELEV	PIPE LATERAL SIZE/LENGTH/SLOPE
PCB-1	PVT. CATCH BASIN	227.40	223.90	6"/13.4 LF/S = 0.0425
PCB-2	PVT. CATCH BASIN	226.09	224.09	6"/30.3 LF/S = 0.0141
PCB-3	PVT. CATCH BASIN	225.61	223.99	6"/43.5 LF/S = 0.0050
PCB-4	PVT. CATCH BASIN	225.72	224.03	6"/24.75 LF/S = 0.0050

NOTES:
SEE SITE PREPARATION AND DEMOLITION PLAN SHEETS FOR STRUCTURES AND FRANCHISE UTILITY COMMENTS.

CONTRACTOR SHALL POTHOLE TO VERIFY ALL CROSSINGS PRIOR TO CONSTRUCTION TO ENSURE CLEARANCE OF UTILITIES. COORDINATE WITH APPROPRIATE UTILITY AGENCY.

MATCHLINE STA 108+00 - SEE SHEET 58

CONSTRUCTION NOTES:

(10) TELEPHONE RISERS AND/OR POLES TO BE REMOVED OR RELOCATED BY OTHERS, UNLESS OTHERWISE NOTED WITH (P) PROTECT. TELEPHONE CABLE TO BE ABANDONED. COORDINATE WORK WITH RON IMAI, US WEST, BY CALLING (360) 699-3546.
(19) LIMITS OF GRADING
(30) CONSTRUCT DRIVEWAY PER DETAIL AND "DRIVEWAY APPROACH SCHEDULE" TABLE ON SHEET 11.
(31) CONSTRUCT CONCRETE CURB AND GUTTER PER DETAIL SHEET 12.
(32) CONSTRUCT CONCRETE SIDEWALK PER DETAIL SHEET 14.
(33) CONSTRUCT CONCRETE CURB RAMP OF TYPE NOTED PER DETAIL SHEET 14.
(34) MATCH NEW CURB TO EXISTING CURB. CURB GRADES ARE BASED ON A 0.5' EXPOSURE. TRANSITION CURB EXPOSURE ON NEW CURB TO MATCH EXISTING CURB AT LEAST 3-FEET PRIOR TO MATCH POINT. IF NECESSARY, SAWCUT EXISTING CURB TO CREATE A CLEAN, UNDISTURBED EDGE.
(35) MATCH NEW SIDEWALK TO EXISTING SIDEWALK. TRANSITION NEW SIDEWALK WIDTH/LOCATION TO MATCH EXISTING WIDTH/LOCATION AT 5:1 PRIOR TO MATCH LINE. IF NECESSARY, SAWCUT EXISTING SIDEWALK TO CREATE A CLEAN, UNDISTURBED EDGE.
(36) CONSTRUCT 6'X6' A.C. LEVEL LANDING AND 6' TRANSITION RAMP FROM END OF SIDEWALK TO SHOULDER. 0.25' MIN CLASS 'A' A.C. OVER 0.4' CRUSHED ROCK.
(37) CONSTRUCT A.C. PAVEMENT RECONSTRUCTION/WIDENING. REFER TO TYPICAL SECTIONS ON SHEETS 8.
(38) CONSTRUCT A.C. OVERLAY. REFER TO TYPICAL SECTIONS ON SHEETS 8.
(39) RELOCATE (R), PROTECT (P), OR ADJUST (A) EXISTING TRAFFIC SIGNAL POLE, PER TRAFFIC SIGNAL PLANS, SHEETS 94 TO 99.
(40) CONSTRUCT EXTRUDED CURB PER CLARK COUNTY STD. DRAWING F18A.
(42) INSTALL FENCE AT LOCATIONS NOTED ON THE PLANS OR AS DIRECTED IN THE FIELD. SEE TYPICAL SECTION ON SHEET 12.
(43) INSTALL FENCE ON RETAINING WALL. SEE RETAINING WALL TABLES FOR DETAILS.
(44) CONSTRUCT RETAINING WALL PER PLAN AND PROFILE ON SHEET 42 TO 56. SEE TYPICAL DETAILS ON SHEETS 40 AND 41.
(54) CONSTRUCT STD. STORM MANHOLE, TYPE 1 WITH STANDARD MANHOLE RING AND COVER PER DETAIL SHEET 17.
(55) CONSTRUCT STD. OVERSIZED STORM MANHOLE, TYPE 2 WITH STANDARD MANHOLE RING AND COVER PER DETAIL SHEET 17.
(56) CONSTRUCT STD. FLAT TOP STORM MANHOLE, TYPE 3 WITH STANDARD MANHOLE RING AND COVER PER DETAIL SHEET 17
(57) CONSTRUCT PRIVATE CATCH BASIN PER DETAIL ON SHEET 19. INSTALL STORM PIPE AS SHOWN AND PER "STORM DRAINAGE DATA" INFORMATION TABLE THIS SHEET.
(58) CONSTRUCT TYPE 1 COMBINATION CURB INLET PER DETAIL ON SHEET 18. INSTALL STORM PIPE AS SHOWN AND PER "STORM DRAINAGE DATA" INFORMATION TABLE THIS SHEET.
(59) CONSTRUCT CATCH BASIN PER DETAIL ON SHEET 18.
(60) CONSTRUCT DITCH INLET PER DETAIL ON SHEET 19. INSTALL STORM PIPE AS SHOWN AND PER "STORM DRAINAGE DATA" INFORMATION TABLE THIS SHEET.
(61) INSTALL STORM PIPE.
(62) INSTALL TRENCH DRAIN AND STORM PIPE. SEE DETAILS ON SHEET 19.
(63) REMOVE EXISTING STORM SEWER PIPE AND/OR STRUCTURES. BACKFILL AND COMPACT VOID LEFT FROM EXISTING PIPE AS NECESSARY.
(64) EXISTING STORM PIPE AND/OR STRUCTURE TO REMAIN.
(65) PLUG AND ABANDON EXISTING STORM PIPE.
(66) ADJUST EXISTING MANHOLE CASTING WITH ADJUSTING RINGS/CATCH BASIN/VALVE BOX RIM TO FINISH GRADE.
(67) CONNECT TO EXISTING STORM PIPE OR STRUCTURE PER DETAIL ON SHEET 19.
(68) INSTALL STORM FILTER VAULT. SEE DETAIL SHEET 38.
(69) CONSTRUCT TYPE 1 CURB INLET PER DETAIL ON SHEET 18. INSTALL STORM PIPE AS SHOWN AND PER "STORM DRAINAGE DATA" INFORMATION TABLE THIS SHEET.
(73) CONSTRUCT ROADSIDE DITCH, GRADE TO DRAIN TO INLET.
(80) RELOCATE (R), PROTECT (P) ADJUST (A) EXISTING SANITARY SEWER CLEANOUT, WATER VALVE OR WATER METER BOX AND/OR SERVICE AS REQUIRED AND DIRECTED. ALL DISTURBED SERVICE LINES SHALL BE REPAIRED AS REQUIRED.
(81) EXISTING FIRE HYDRANT TO BE RELOCATED (R), PROTECTED (P), OR ADJUSTED (A). COORDINATE WITH CLARK PUBLIC UTILITIES.
(82) PROTECT EXISTING WATER LINE.
(90) RELOCATE (R), PROTECT (P), OR ADJUST (A) EXISTING IRRIGATION AS REQUIRED AND DIRECTED. ALL DISTURBED IRRIGATION SHALL BE REPAIRED AS REQUIRED.
(91) ADJUST EXISTING SANITARY OR STORM MANHOLE TO FINISH GRADE BY REMOVING CONE SECTION AND ADDITNG FULL MANHOLE SECTION.
(92) EXTEND EXISTING SEWER LATERAL TO PROPOSED R/W LINE AND INSTALL CLEANOUT.
(93) PROTECT OR REMOVE EXISTING SEPTIC SYSTEM AND INSTALL NEW SEWER SERVICE TO PROPERTY AS DIRECTED BY ENGINEER.

FOR INFORMATIONAL PURPOSES ONLY
ALL PLAN DETAIL AND INFORMATION IS NOT SHOWN ON THIS 90% COMPLETED SET OF PLANS.
90% SUBMITTAL - JULY 2004

DESIGNED:	TSH
DRAWN:	NPR/RAF
CRP:	330222
HOR.	1" = 20'
VERT.	1" = 5'
DATE:	7/2004
DWG:	
SHEET	58 OF 99

CALL 48 HOURS BEFORE YOU DIG 1-800-553-4344 "It's the Law" NORTHWEST UTILITIES NOTIFICATION CENTER

Harper Houf Peterson Righellis Inc.
ENGINEERS • PLANNERS • SURVEYORS
1104 MAIN STREET, SUITE 100, VANCOUVER, WA 98660
TEL 360.750.1131 www.hhpr.com FAX 360.750.1141

DESIGN & ENGINEERING DIVISION

NE 88TH STREET
STA 103+50 TO STA 108+00

proud past, promising future
CLARK COUNTY WASHINGTON

P:\Clk-12 NE 88th\ICRK12-DWGS\ Clk12-RDWEST1.DWG

MATCHLINE STA 108+00 - SEE SHEET 58

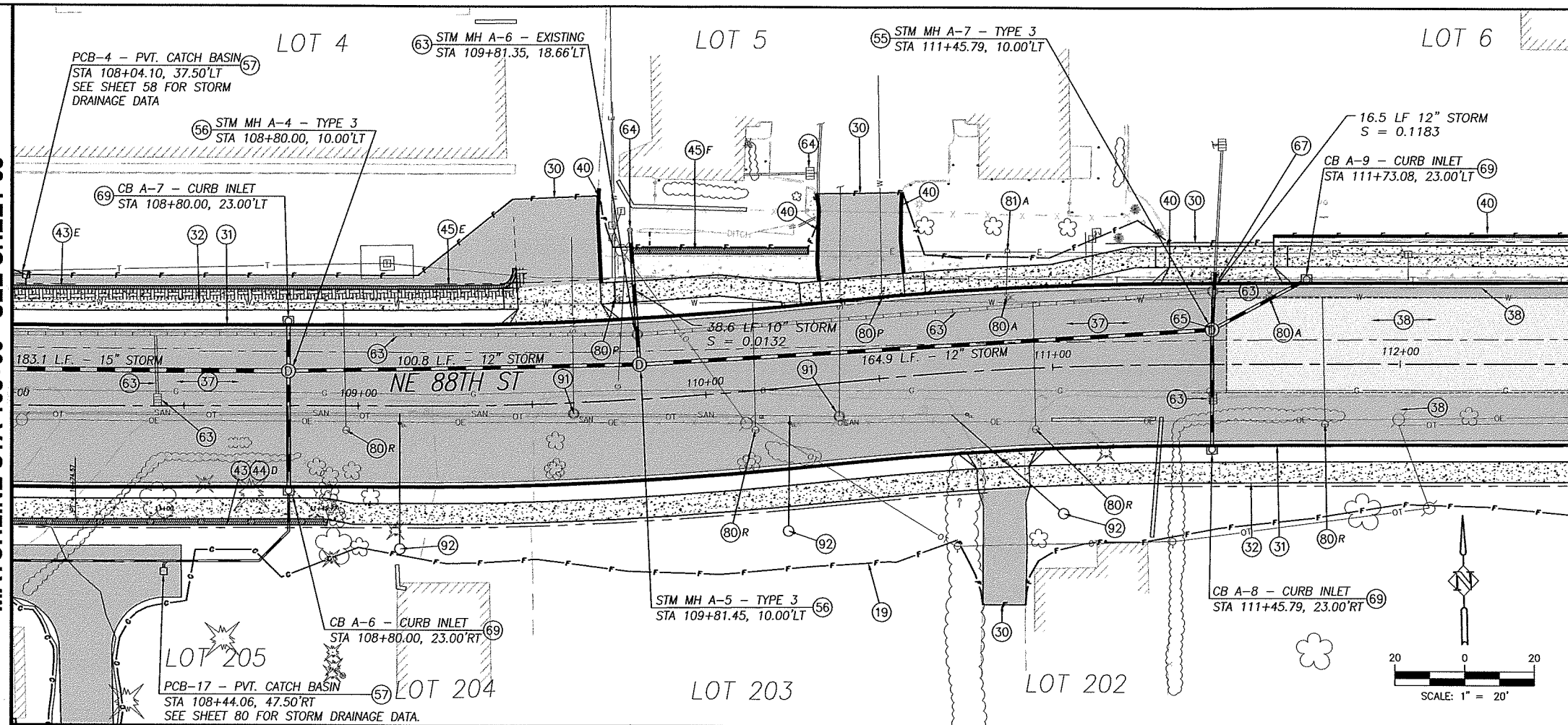

MATCHLINE STA 112+50 - SEE SHEET 60

SEE SHEET XX FOR LOT 206/205 IMPROVEMENTS

NOTES:
SEE SITE PREPARATION AND DEMOLITION PLAN SHEETS FOR STRUCTURES AND FRANCHISE UTILITY COMMENTS.

CONTRACTOR SHALL POTHOLE TO VERIFY ALL CROSSINGS PRIOR TO CONSTRUCTION TO ENSURE CLEARANCE OF UTILITIES. COORDINATE WITH APPROPRIATE UTILITY AGENCY.

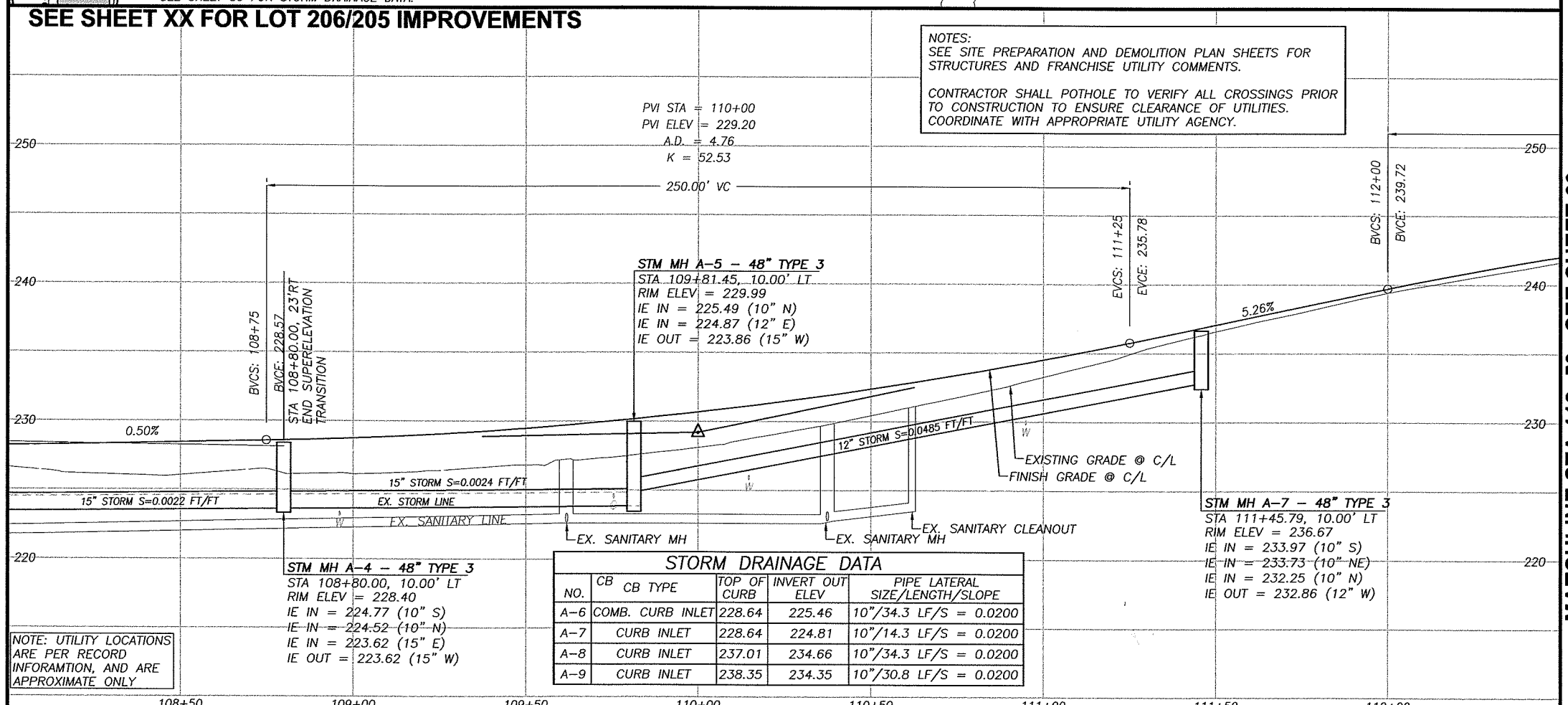

NOTE: UTILITY LOCATIONS ARE PER RECORD INFORAMTION, AND ARE APPROXIMATE ONLY

STORM DRAINAGE DATA

NO.	CB TYPE	TOP OF CB CURB	INVERT OUT ELEV	PIPE LATERAL SIZE/LENGTH/SLOPE
A-6	COMB. CURB INLET	228.64	225.46	10"/34.3 LF/S = 0.0200
A-7	CURB INLET	228.64	224.81	10"/14.3 LF/S = 0.0200
A-8	CURB INLET	237.01	234.66	10"/34.3 LF/S = 0.0200
A-9	CURB INLET	238.35	234.35	10"/30.8 LF/S = 0.0200

CONSTRUCTION NOTES:

(10) TELEPHONE RISERS AND/OR POLES TO BE REMOVED OR RELOCATED BY OTHERS, UNLESS OTHERWISE NOTED WITH (P) PROTECT. TELEPHONE CABLE TO BE ABANDONED. COORDINATE WORK WITH RON IMAI, US WEST, BY CALLING (360) 699-3546.

(19) LIMITS OF GRADING

(30) CONSTRUCT DRIVEWAY PER DETAIL AND "DRIVEWAY APPROACH SCHEDULE" TABLE ON SHEET 11.

(31) CONSTRUCT CONCRETE CURB AND GUTTER PER DETAIL SHEET 12.

(32) CONSTRUCT CONCRETE SIDEWALK PER DETAIL SHEET 14.

(33) CONSTRUCT CONCRETE CURB RAMP OF TYPE NOTED PER DETAIL SHEET 14.

(34) MATCH NEW CURB TO EXISTING CURB. CURB GRADES ARE BASED ON A 0.5' EXPOSURE. TRANSITION CURB EXPOSURE ON NEW CURB TO MATCH EXISTING CURB AT LEAST 3-FEET PRIOR TO MATCH POINT. IF NECESSARY, SAWCUT EXISTING CURB TO CREATE A CLEAN, UNDISTURBED EDGE.

(35) MATCH NEW SIDEWALK TO EXISTING SIDEWALK. TRANSITION NEW SIDEWALK WIDTH/LOCATION TO MATCH EXISTING WIDTH/LOCATION AT 5:1 PRIOR TO MATCH LINE. IF NECESSARY, SAWCUT EXISTING SIDEWALK TO CREATE A CLEAN, UNDISTURBED EDGE.

(36) CONSTRUCT 6'X6' A.C. LEVEL LANDING AND 6' TRANSITION RAMP FROM END OF SIDEWALK TO SHOULDER. 0.25' MIN CLASS 'A' A.C. OVER 0.4' CRUSHED ROCK.

(37) CONSTRUCT A.C. PAVEMENT RECONSTRUCTION/WIDENING. REFER TO TYPICAL SECTIONS ON SHEETS 8.

(38) CONSTRUCT A.C. OVERLAY. REFER TO TYPICAL SECTIONS ON SHEETS 8.

(39) RELOCATE (R), PROTECT (P), OR ADJUST (A) EXISTING TRAFFIC SIGNAL POLE, PER TRAFFIC SIGNAL PLANS, SHEETS 94 TO 99.

(40) CONSTRUCT EXTRUDED CURB PER CLARK COUNTY STD. DRAWING F18A.

(42) INSTALL FENCE AT LOCATIONS NOTED ON THE PLANS OR AS DIRECTED IN THE FIELD. SEE TYPICAL SECTION ON SHEET 12.

(43) INSTALL FENCE ON RETAINING WALL. SEE RETAINING WALL TABLES FOR DETAILS.

(44) CONSTRUCT RETAINING WALL PER PLAN AND PROFILE ON SHEET 42 TO 56. SEE TYPICAL DETAILS ON SHEETS 40 AND 41.

(54) CONSTRUCT STD. STORM MANHOLE, TYPE 1 WITH STANDARD MANHOLE RING AND COVER PER DETAIL SHEET 17.

(55) CONSTRUCT STD. OVERSIZED STORM MANHOLE, TYPE 2 WITH STANDARD MANHOLE RING AND COVER PER DETAIL SHEET 17.

(56) CONSTRUCT STD. FLAT TOP STORM MANHOLE, TYPE 3 WITH STANDARD MANHOLE RING AND COVER PER DETAIL SHEET 17

(57) CONSTRUCT PRIVATE CATCH BASIN PER DETAIL ON SHEET 19. INSTALL STORM PIPE AS SHOWN AND PER "STORM DRAINAGE DATA" INFORMATION TABLE THIS SHEET.

(58) CONSTRUCT TYPE 1 COMBINATION CURB INLET PER DETAIL ON SHEET 18. INSTALL STORM PIPE AS SHOWN AND PER "STORM DRAINAGE DATA" INFORMATION TABLE THIS SHEET.

(59) CONSTRUCT CATCH BASIN PER DETAIL ON SHEET 18.

(60) CONSTRUCT DITCH INLET PER DETAIL ON SHEET 19. INSTALL STORM PIPE AS SHOWN AND PER "STORM DRAINAGE DATA" INFORMATION TABLE THIS SHEET.

(61) INSTALL STORM PIPE.

(62) INSTALL TRENCH DRAIN AND STORM PIPE. SEE DETAILS ON SHEET 19.

(63) REMOVE EXISTING STORM SEWER PIPE AND/OR STRUCTURES. BACKFILL AND COMPACT VOID LEFT FROM EXISTING PIPE AS NECESSARY.

(64) EXISTING STORM PIPE AND/OR STRUCTURE TO REMAIN.

(65) PLUG AND ABANDON EXISTING STORM PIPE.

(66) ADJUST EXISTING MANHOLE CASTING WITH ADJUSTING RINGS/CATCH BASIN/VALVE BOX RIM TO FINISH GRADE.

(67) CONNECT TO EXISTING STORM PIPE OR STRUCTURE PER DETAIL ON SHEET 19.

(68) INSTALL STORM FILTER VAULT. SEE DETAIL SHEET 38.

(69) CONSTRUCT TYPE 1 CURB INLET PER DETAIL ON SHEET 18. INSTALL STORM PIPE AS SHOWN AND PER "STORM DRAINAGE DATA" INFORMATION TABLE THIS SHEET.

(73) CONSTRUCT ROADSIDE DITCH, GRADE TO DRAIN TO INLET.

(80) RELOCATE (R), PROTECT (P) ADJUST (A) EXISTING SANITARY SEWER CLEANOUT, WATER VALVE OR WATER METER BOX AND/OR SERVICE AS REQUIRED AND DIRECTED. ALL DISTURBED SERVICE LINES SHALL BE REPAIRED AS REQUIRED.

(81) EXISTING FIRE HYDRANT TO BE RELOCATED (R), PROTECTED (P), OR ADJUSTED (A). COORDINATE WITH CLARK PUBLIC UTILITIES.

(82) PROTECT EXISTING WATER LINE.

(90) RELOCATE (R), PROTECT (P), OR ADJUST (A) EXISTING IRRIGATION AS REQUIRED AND DIRECTED. ALL DISTURBED IRRIGATION SHALL BE REPAIRED AS REQUIRED.

(91) ADJUST EXISTING SANITARY OR STORM MANHOLE TO FINISH GRADE BY REMOVING CONE SECTION AND ADDITNG FULL MANHOLE SECTION.

(92) EXTEND EXISTING SEWER LATERAL TO PROPOSED R/W LINE AND INSTALL CLEANOUT.

(93) PROTECT OR REMOVE EXISTING SEPTIC SYSTEM AND INSTALL NEW SEWER SERVICE TO PROPERTY AS DIRECTED BY ENGINEER.

FOR INFORMATIONAL PURPOSES ONLY

ALL PLAN DETAIL AND INFORMATION IS NOT SHOWN ON THIS 90% COMPLETED SET OF PLANS.

90% SUBMITTAL - JULY 2004

DESIGNED:	TSH
DRAWN:	NPR/RAF
CRP:	330222
HOR.	1" = 20'
VERT.	1" = 5'
DATE:	7/2004
DWG:	
SHEET	59 OF 99

CALL 48 HOURS BEFORE YOU DIG 1-800-553-4344 "It's the Law" NORTHWEST UTILITIES NOTIFICATION CENTER

Harper Houf Peterson Righellis Inc.
ENGINEERS • PLANNERS • SURVEYORS
1104 MAIN STREET, SUITE 100, VANCOUVER, WA 98660
TEL 360.750.1131 www.hhpr.com FAX 360.750.1141

DESIGN & ENGINEERING DIVISION

NE 88TH STREET
STA 108+00 TO STA 112+50

proud past, promising future
CLARK COUNTY WASHINGTON

P:\Clk-12 NE 88th\LCRK12-DWGS\ Clk12-RDWEST1.DWG

MATCHLINE STA 112+50 - SEE SHEET 59

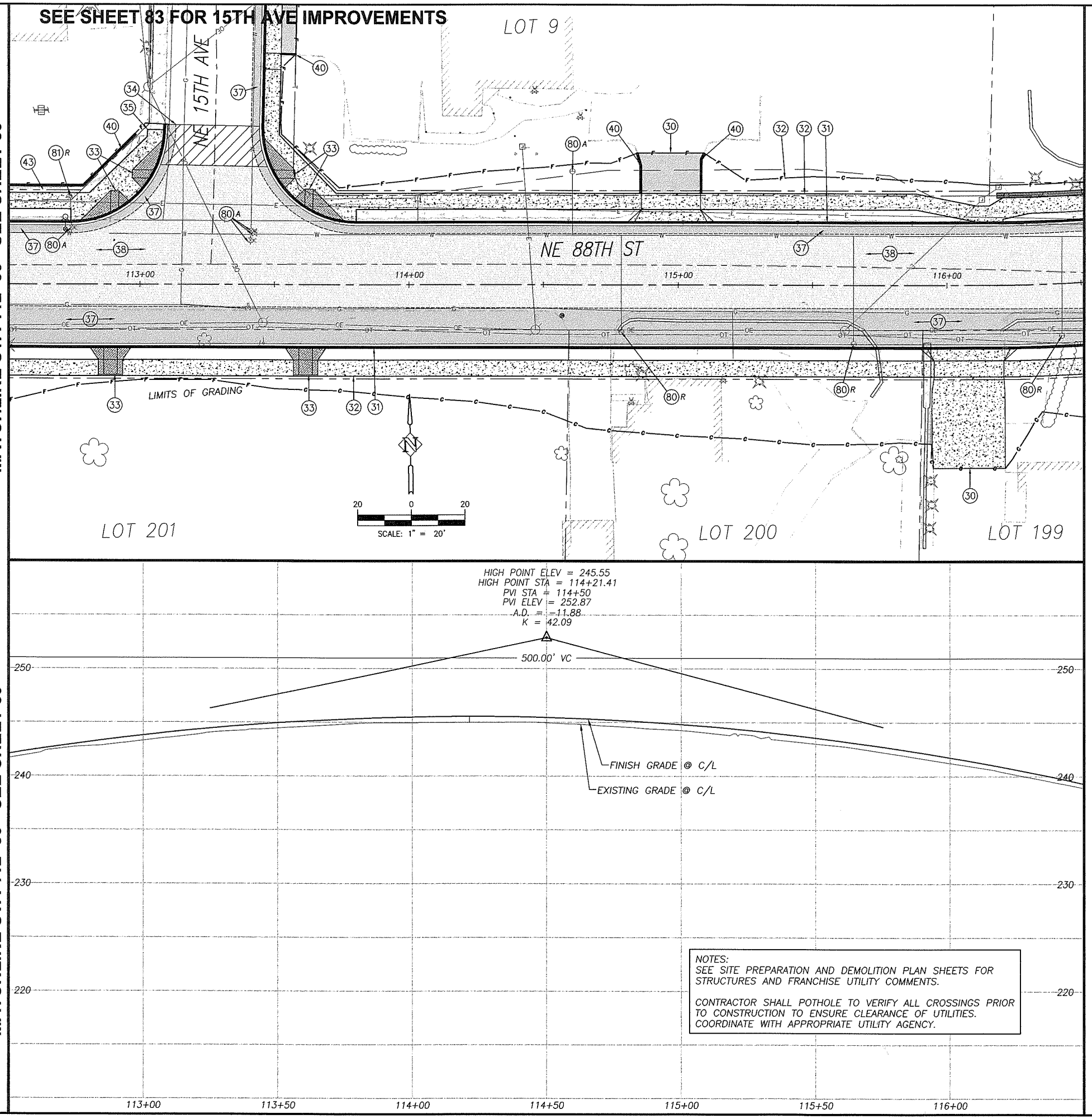

NOTES:
SEE SITE PREPARATION AND DEMOLITION PLAN SHEETS FOR STRUCTURES AND FRANCHISE UTILITY COMMENTS.

CONTRACTOR SHALL POTHOLE TO VERIFY ALL CROSSINGS PRIOR TO CONSTRUCTION TO ENSURE CLEARANCE OF UTILITIES. COORDINATE WITH APPROPRIATE UTILITY AGENCY.

MATCHLINE STA 116+50 - SEE SHEET 61

MATCHLINE STA 112+50 - SEE SHEET 59

MATCHLINE STA 116+50 - SEE SHEET 61

CONSTRUCTION NOTES:

(10) TELEPHONE RISERS AND/OR POLES TO BE REMOVED OR RELOCATED BY OTHERS, UNLESS OTHERWISE NOTED WITH (P) PROTECT. TELEPHONE CABLE TO BE ABANDONED. COORDINATE WORK WITH RON IMAI, US WEST, BY CALLING (360) 699-3546.

(19) LIMITS OF GRADING

(30) CONSTRUCT DRIVEWAY PER DETAIL AND "DRIVEWAY APPROACH SCHEDULE" TABLE ON SHEET 11.

(31) CONSTRUCT CONCRETE CURB AND GUTTER PER DETAIL SHEET 12.

(32) CONSTRUCT CONCRETE SIDEWALK PER DETAIL SHEET 14.

(33) CONSTRUCT CONCRETE CURB RAMP OF TYPE NOTED PER DETAIL SHEET 14.

(34) MATCH NEW CURB TO EXISTING CURB. CURB GRADES ARE BASED ON A 0.5' EXPOSURE. TRANSITION CURB EXPOSURE ON NEW CURB TO MATCH EXISTING CURB AT LEAST 3-FEET PRIOR TO MATCH POINT. IF NECESSARY, SAWCUT EXISTING CURB TO CREATE A CLEAN, UNDISTURBED EDGE.

(35) MATCH NEW SIDEWALK TO EXISTING SIDEWALK. TRANSITION NEW SIDEWALK WIDTH/LOCATION TO MATCH EXISTING WIDTH/LOCATION AT 5:1 PRIOR TO MATCH LINE. IF NECESSARY, SAWCUT EXISTING SIDEWALK TO CREATE A CLEAN, UNDISTURBED EDGE.

(36) CONSTRUCT 6'X6' A.C. LEVEL LANDING AND 6' TRANSITION RAMP FROM END OF SIDEWALK TO SHOULDER. 0.25' MIN CLASS 'A' A.C. OVER 0.4' CRUSHED ROCK.

(37) CONSTRUCT A.C. PAVEMENT RECONSTRUCTION/WIDENING. REFER TO TYPICAL SECTIONS ON SHEETS 8.

(38) CONSTRUCT A.C. OVERLAY. REFER TO TYPICAL SECTIONS ON SHEETS 8.

(39) RELOCATE (R), PROTECT (P), OR ADJUST (A) EXISTING TRAFFIC SIGNAL POLE, PER TRAFFIC SIGNAL PLANS, SHEETS 94 TO 99.

(40) CONSTRUCT EXTRUDED CURB PER CLARK COUNTY STD. DRAWING F18A.

(42) INSTALL FENCE AT LOCATIONS NOTED ON THE PLANS OR AS DIRECTED IN THE FIELD. SEE TYPICAL SECTION ON SHEET 12.

(43) INSTALL FENCE ON RETAINING WALL. SEE RETAINING WALL TABLES FOR DETAILS.

(44) CONSTRUCT RETAINING WALL PER PLAN AND PROFILE ON SHEET 42 TO 56. SEE TYPICAL DETAILS ON SHEETS 40 AND 41.

(54) CONSTRUCT STD. STORM MANHOLE, TYPE 1 WITH STANDARD MANHOLE RING AND COVER PER DETAIL SHEET 17.

(55) CONSTRUCT STD. OVERSIZED STORM MANHOLE, TYPE 2 WITH STANDARD MANHOLE RING AND COVER PER DETAIL SHEET 17.

(56) CONSTRUCT STD. FLAT TOP STORM MANHOLE, TYPE 3 WITH STANDARD MANHOLE RING AND COVER PER DETAIL SHEET 17

(57) CONSTRUCT PRIVATE CATCH BASIN PER DETAIL ON SHEET 19. INSTALL STORM PIPE AS SHOWN AND PER "STORM DRAINAGE DATA" INFORMATION TABLE THIS SHEET.

(58) CONSTRUCT TYPE 1 COMBINATION CURB INLET PER DETAIL ON SHEET 18. INSTALL STORM PIPE AS SHOWN AND PER "STORM DRAINAGE DATA" INFORMATION TABLE THIS SHEET.

(59) CONSTRUCT CATCH BASIN PER DETAIL ON SHEET 18.

(60) CONSTRUCT DITCH INLET PER DETAIL ON SHEET 19. INSTALL STORM PIPE AS SHOWN AND PER "STORM DRAINAGE DATA" INFORMATION TABLE THIS SHEET.

(61) INSTALL STORM PIPE.

(62) INSTALL TRENCH DRAIN AND STORM PIPE. SEE DETAILS ON SHEET 19.

(63) REMOVE EXISTING STORM SEWER PIPE AND/OR STRUCTURES. BACKFILL AND COMPACT VOID LEFT FROM EXISTING PIPE AS NECESSARY.

(64) EXISTING STORM PIPE AND/OR STRUCTURE TO REMAIN.

(65) PLUG AND ABANDON EXISTING STORM PIPE.

(66) ADJUST EXISTING MANHOLE CASTING WITH ADJUSTING RINGS/CATCH BASIN/VALVE BOX RIM TO FINISH GRADE.

(67) CONNECT TO EXISTING STORM PIPE OR STRUCTURE PER DETAIL ON SHEET 19.

(68) INSTALL STORM FILTER VAULT. SEE DETAIL SHEET 38.

(69) CONSTRUCT TYPE 1 CURB INLET PER DETAIL ON SHEET 18. INSTALL STORM PIPE AS SHOWN AND PER "STORM DRAINAGE DATA" INFORMATION TABLE THIS SHEET.

(73) CONSTRUCT ROADSIDE DITCH, GRADE TO DRAIN TO INLET.

(80) RELOCATE (R), PROTECT (P) ADJUST (A) EXISTING SANITARY SEWER CLEANOUT, WATER VALVE OR WATER METER BOX AND/OR SERVICE AS REQUIRED AND DIRECTED. ALL DISTURBED SERVICE LINES SHALL BE REPAIRED AS REQUIRED.

(81) EXISTING FIRE HYDRANT TO BE RELOCATED (R), PROTECTED (P), OR ADJUSTED (A). COORDINATE WITH CLARK PUBLIC UTILITIES.

(82) PROTECT EXISTING WATER LINE.

(90) RELOCATE (R), PROTECT (P), OR ADJUST (A) EXISTING IRRIGATION AS REQUIRED AND DIRECTED. ALL DISTURBED IRRIGATION SHALL BE REPAIRED AS REQUIRED.

(91) ADJUST EXISTING SANITARY OR STORM MANHOLE TO FINISH GRADE BY REMOVING CONE SECTION AND ADDITNG FULL MANHOLE SECTION.

(92) EXTEND EXISTING SEWER LATERAL TO PROPOSED R/W LINE AND INSTALL CLEANOUT.

(93) PROTECT OR REMOVE EXISTING SEPTIC SYSTEM AND INSTALL NEW SEWER SERVICE TO PROPERTY AS DIRECTED BY ENGINEER.

FOR INFORMATIONAL PURPOSES ONLY

ALL PLAN DETAIL AND INFORMATION IS NOT SHOWN ON THIS 90% COMPLETED SET OF PLANS.

90% SUBMITTAL - JULY 2004

DESIGNED:	TSH
DRAWN:	NPR/RAF
CRP:	330222
HOR.	1" = 20'
VERT.	1" = 5'
DATE:	7/2004
DWG:	
SHEET	60 OF 99

CALL 48 HOURS BEFORE YOU DIG
1-800-553-4344
"It's the Law"
NORTHWEST UTILITIES NOTIFICATION CENTER

Harper Houf Peterson Righellis Inc.
ENGINEERS · PLANNERS · SURVEYORS
1104 MAIN STREET, SUITE 100, VANCOUVER, WA 98660
TEL 360.750.1131 www.hhpr.com FAX 360.750.1141

DESIGN & ENGINEERING DIVISION

NE 88TH STREET
STA 112+50 TO STA 116+50

proud past, promising future
CLARK COUNTY WASHINGTON

P:\Clrk-12 LNE 88th\CRK12-DWGS\ Crk12-RDWEST1.DWG

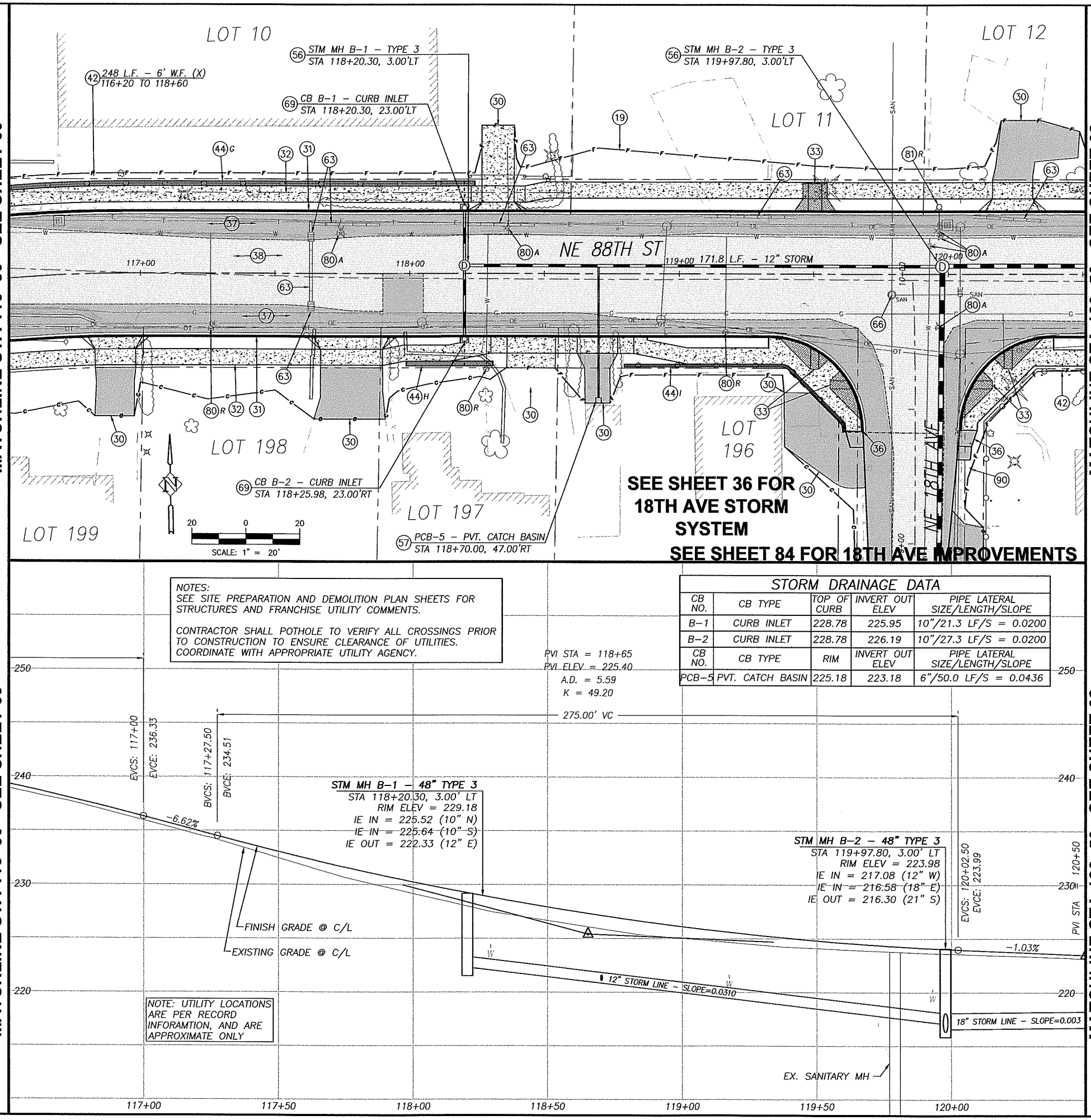

NOTES:
SEE SITE PREPARATION AND DEMOLITION PLAN SHEETS FOR STRUCTURES AND FRANCHISE UTILITY COMMENTS.

CONTRACTOR SHALL POTHOLE TO VERIFY ALL CROSSINGS PRIOR TO CONSTRUCTION TO ENSURE CLEARANCE OF UTILITIES. COORDINATE WITH APPROPRIATE UTILITY AGENCY.

STORM DRAINAGE DATA

CB NO.	CB TYPE	TOP OF CURB	INVERT OUT ELEV	PIPE LATERAL SIZE/LENGTH/SLOPE
B-1	CURB INLET	228.78	225.95	10"/21.3 LF/S = 0.0200
B-2	CURB INLET	228.78	226.19	10"/27.3 LF/S = 0.0200
CB NO.	CB TYPE	RIM	INVERT OUT ELEV	PIPE LATERAL SIZE/LENGTH/SLOPE
PCB-5	PVT. CATCH BASIN	225.18	223.18	6"/50.0 LF/S = 0.0436

NOTE: UTILITY LOCATIONS ARE PER RECORD INFORAMTION, AND ARE APPROXIMATE ONLY

P:\Clrk-12 (NE 88th)\CRK12-DWGS\Clrk12-RDWEST1.DWG

CONSTRUCTION NOTES:

(10) TELEPHONE RISERS AND/OR POLES TO BE REMOVED OR RELOCATED BY OTHERS, UNLESS OTHERWISE NOTED WITH (P) PROTECT. TELEPHONE CABLE TO BE ABANDONED. COORDINATE WORK WITH RON IMAI, US WEST, BY CALLING (360) 699-3546.

(19) LIMITS OF GRADING

(30) CONSTRUCT DRIVEWAY PER DETAIL AND "DRIVEWAY APPROACH SCHEDULE" TABLE ON SHEET 11.

(31) CONSTRUCT CONCRETE CURB AND GUTTER PER DETAIL SHEET 12.

(32) CONSTRUCT CONCRETE SIDEWALK PER DETAIL SHEET 14.

(33) CONSTRUCT CONCRETE CURB RAMP OF TYPE NOTED PER DETAIL SHEET 14.

(34) MATCH NEW CURB TO EXISTING CURB. CURB GRADES ARE BASED ON A 0.5' EXPOSURE. TRANSITION CURB EXPOSURE ON NEW CURB TO MATCH EXISTING CURB AT LEAST 3-FEET PRIOR TO MATCH POINT. IF NECESSARY, SAWCUT EXISTING CURB TO CREATE A CLEAN, UNDISTURBED EDGE.

(35) MATCH NEW SIDEWALK TO EXISTING SIDEWALK. TRANSITION NEW SIDEWALK WIDTH/LOCATION TO MATCH EXISTING WIDTH/LOCATION AT 5:1 PRIOR TO MATCH LINE. IF NECESSARY, SAWCUT EXISTING SIDEWALK TO CREATE A CLEAN, UNDISTURBED EDGE.

(36) CONSTRUCT 6'X6' A.C. LEVEL LANDING AND 6' TRANSITION RAMP FROM END OF SIDEWALK TO SHOULDER. 0.25' MIN CLASS 'A' A.C. OVER 0.4' CRUSHED ROCK.

(37) CONSTRUCT A.C. PAVEMENT RECONSTRUCTION/WIDENING. REFER TO TYPICAL SECTIONS ON SHEETS 8.

(38) CONSTRUCT A.C. OVERLAY. REFER TO TYPICAL SECTIONS ON SHEETS 8.

(39) RELOCATE (R), PROTECT (P), OR ADJUST (A) EXISTING TRAFFIC SIGNAL POLE, PER TRAFFIC SIGNAL PLANS, SHEETS 94 TO 99.

(40) CONSTRUCT EXTRUDED CURB PER CLARK COUNTY STD. DRAWING F18A.

(42) INSTALL FENCE AT LOCATIONS NOTED ON THE PLANS OR AS DIRECTED IN THE FIELD. SEE TYPICAL SECTION ON SHEET 12.

(43) INSTALL FENCE ON RETAINING WALL. SEE RETAINING WALL TABLES FOR DETAILS.

(44) CONSTRUCT RETAINING WALL PER PLAN AND PROFILE ON SHEET 42 TO 56. SEE TYPICAL DETAILS ON SHEETS 40 AND 41.

(54) CONSTRUCT STD. STORM MANHOLE, TYPE 1 WITH STANDARD MANHOLE RING AND COVER PER DETAIL SHEET 17.

(55) CONSTRUCT STD. OVERSIZED STORM MANHOLE, TYPE 2 WITH STANDARD MANHOLE RING AND COVER PER DETAIL SHEET 17.

(56) CONSTRUCT STD. FLAT TOP STORM MANHOLE, TYPE 3 WITH STANDARD MANHOLE RING AND COVER PER DETAIL SHEET 17

(57) CONSTRUCT PRIVATE CATCH BASIN PER DETAIL ON SHEET 19. INSTALL STORM PIPE AS SHOWN AND PER "STORM DRAINAGE DATA" INFORMATION TABLE THIS SHEET.

(58) CONSTRUCT TYPE 1 COMBINATION CURB INLET PER DETAIL ON SHEET 18. INSTALL STORM PIPE AS SHOWN AND PER "STORM DRAINAGE DATA" INFORMATION TABLE THIS SHEET.

(59) CONSTRUCT CATCH BASIN PER DETAIL ON SHEET 18.

(60) CONSTRUCT DITCH INLET PER DETAIL ON SHEET 19. INSTALL STORM PIPE AS SHOWN AND PER "STORM DRAINAGE DATA" INFORMATION TABLE THIS SHEET.

(61) INSTALL STORM PIPE.

(62) INSTALL TRENCH DRAIN AND STORM PIPE. SEE DETAILS ON SHEET 19.

(63) REMOVE EXISTING STORM SEWER PIPE AND/OR STRUCTURES. BACKFILL AND COMPACT VOID LEFT FROM EXISTING PIPE AS NECESSARY.

(64) EXISTING STORM PIPE AND/OR STRUCTURE TO REMAIN.

(65) PLUG AND ABANDON EXISTING STORM PIPE.

(66) ADJUST EXISTING MANHOLE CASTING WITH ADJUSTING RINGS/CATCH BASIN/VALVE BOX RIM TO FINISH GRADE.

(67) CONNECT TO EXISTING STORM PIPE OR STRUCTURE PER DETAIL ON SHEET 19.

(68) INSTALL STORM FILTER VAULT. SEE DETAIL SHEET 38.

(69) CONSTRUCT TYPE 1 CURB INLET PER DETAIL ON SHEET 18. INSTALL STORM PIPE AS SHOWN AND PER "STORM DRAINAGE DATA" INFORMATION TABLE THIS SHEET.

(73) CONSTRUCT ROADSIDE DITCH, GRADE TO DRAIN TO INLET.

(80) RELOCATE (R), PROTECT (P) ADJUST (A) EXISTING SANITARY SEWER CLEANOUT, WATER VALVE OR WATER METER BOX AND/OR SERVICE AS REQUIRED AND DIRECTED. ALL DISTURBED SERVICE LINES SHALL BE REPAIRED AS REQUIRED.

(81) EXISTING FIRE HYDRANT TO BE RELOCATED (R), PROTECTED (P), OR ADJUSTED (A). COORDINATE WITH CLARK PUBLIC UTILITIES.

(82) PROTECT EXISTING WATER LINE.

(90) RELOCATE (R), PROTECT (P), OR ADJUST (A) EXISTING IRRIGATION AS REQUIRED AND DIRECTED. ALL DISTURBED IRRIGATION SHALL BE REPAIRED AS REQUIRED.

(91) ADJUST EXISTING SANITARY OR STORM MANHOLE TO FINISH GRADE BY REMOVING CONE SECTION AND ADDITNG FULL MANHOLE SECTION.

(92) EXTEND EXISTING SEWER LATERAL TO PROPOSED R/W LINE AND INSTALL CLEANOUT.

(93) PROTECT OR REMOVE EXISTING SEPTIC SYSTEM AND INSTALL NEW SEWER SERVICE TO PROPERTY AS DIRECTED BY ENGINEER.

FOR INFORMATIONAL PURPOSES ONLY

ALL PLAN DETAIL AND INFORMATION IS NOT SHOWN ON THIS 90% COMPLETED SET OF PLANS.

90% SUBMITTAL - JULY 2004

DESIGNED:	TSH
DRAWN:	NPR/RAF
CRP:	330222
HOR.	1" = 20'
VERT.	1" = 5'
DATE:	7/2004
DWG:	
SHEET	61 OF 99

CALL 48 HOURS BEFORE YOU DIG
1-800-553-4344
"It's the Law"
NORTHWEST UTILITIES NOTIFICATION CENTER

Harper Houf Peterson Righellis Inc.
ENGINEERS • PLANNERS • SURVEYORS
1104 MAIN STREET, SUITE 100, VANCOUVER, WA 98660
TEL 360.750.1131 www.hhpr.com FAX 360.750.1141

DESIGN & ENGINEERING DIVISION

NE 88TH STREET
STA 116+50 TO STA 120+50

proud past, promising future
CLARK COUNTY WASHINGTON

MATCHLINE STA 120+50 - SEE SHEET 61

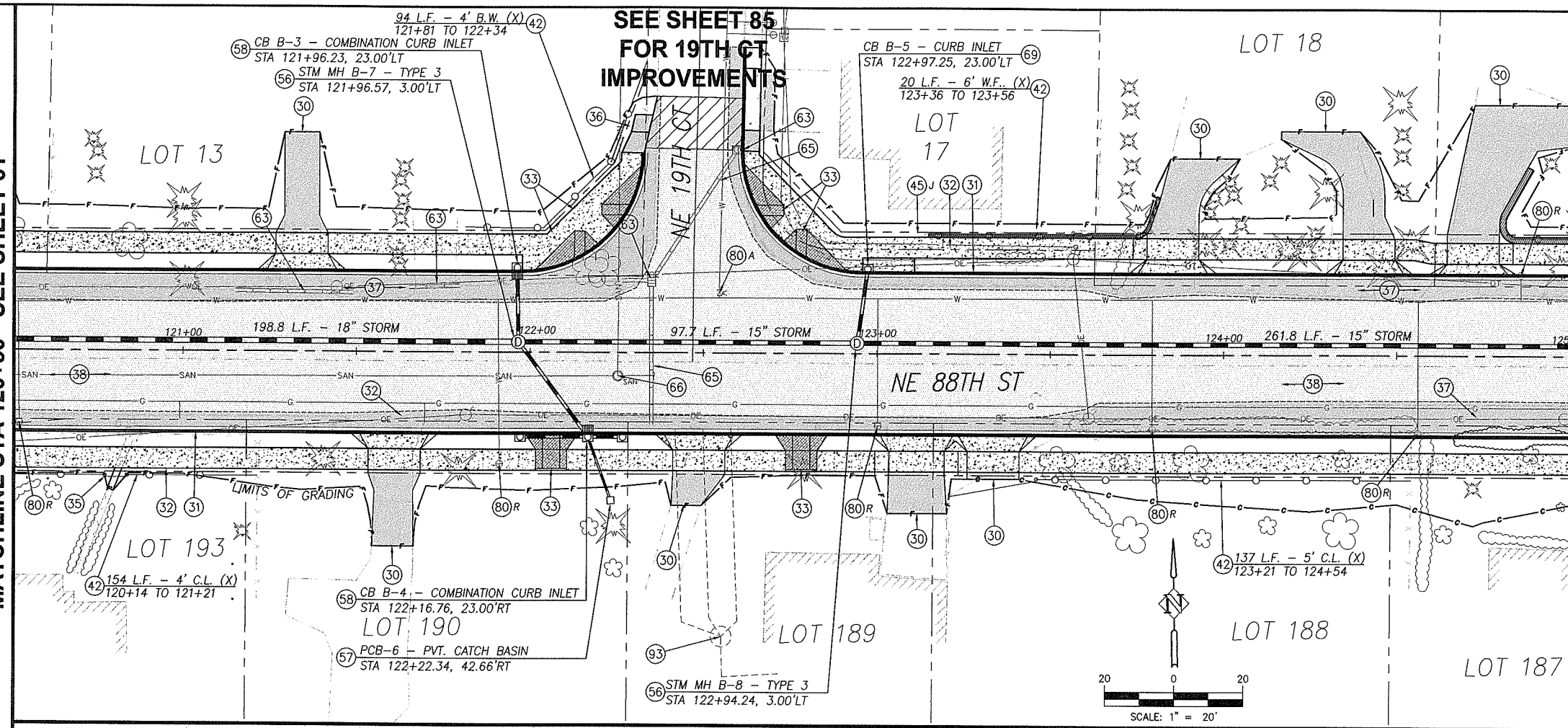

MATCHLINE STA 125+00 - SEE SHEET 63

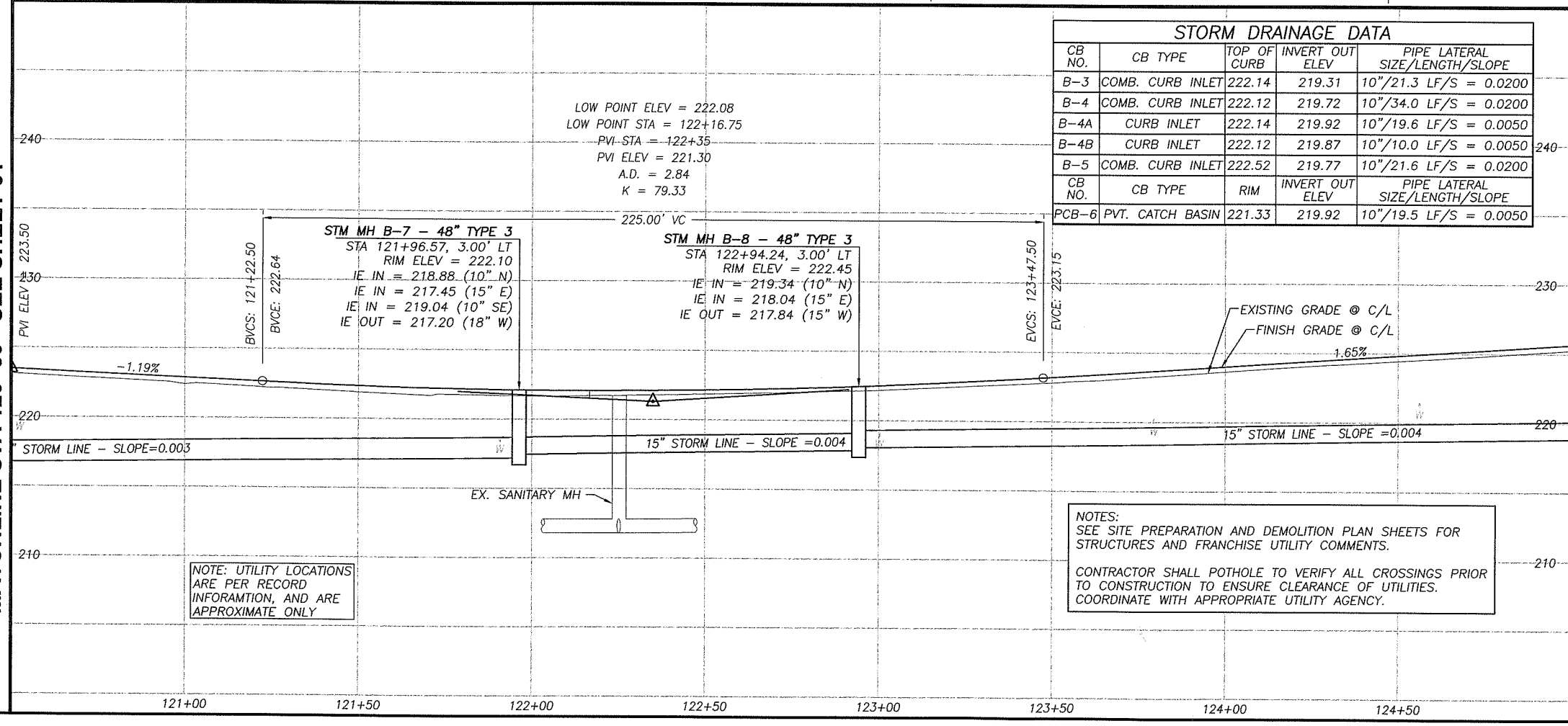

NOTE: UTILITY LOCATIONS ARE PER RECORD INFORAMTION, AND ARE APPROXIMATE ONLY

NOTES:
SEE SITE PREPARATION AND DEMOLITION PLAN SHEETS FOR STRUCTURES AND FRANCHISE UTILITY COMMENTS.

CONTRACTOR SHALL POTHOLE TO VERIFY ALL CROSSINGS PRIOR TO CONSTRUCTION TO ENSURE CLEARANCE OF UTILITIES. COORDINATE WITH APPROPRIATE UTILITY AGENCY.

STORM DRAINAGE DATA

CB NO.	CB TYPE	TOP OF CURB	INVERT OUT ELEV	PIPE LATERAL SIZE/LENGTH/SLOPE
B-3	COMB. CURB INLET	222.14	219.31	10"/21.3 LF/S = 0.0200
B-4	COMB. CURB INLET	222.12	219.72	10"/34.0 LF/S = 0.0200
B-4A	CURB INLET	222.14	219.92	10"/19.6 LF/S = 0.0050
B-4B	CURB INLET	222.12	219.87	10"/10.0 LF/S = 0.0050
B-5	COMB. CURB INLET	222.52	219.77	10"/21.6 LF/S = 0.0200
CB NO.	CB TYPE	RIM	INVERT OUT ELEV	PIPE LATERAL SIZE/LENGTH/SLOPE
PCB-6	PVT. CATCH BASIN	221.33	219.92	10"/19.5 LF/S = 0.0050

CONSTRUCTION NOTES:

(10) TELEPHONE RISERS AND/OR POLES TO BE REMOVED OR RELOCATED BY OTHERS, UNLESS OTHERWISE NOTED WITH (P) PROTECT. TELEPHONE CABLE TO BE ABANDONED. COORDINATE WORK WITH RON IMAI, US WEST, BY CALLING (360) 699-3546.

(19) LIMITS OF GRADING

(30) CONSTRUCT DRIVEWAY PER DETAIL AND "DRIVEWAY APPROACH SCHEDULE" TABLE ON SHEET 11.

(31) CONSTRUCT CONCRETE CURB AND GUTTER PER DETAIL SHEET 12.

(32) CONSTRUCT CONCRETE SIDEWALK PER DETAIL SHEET 14.

(33) CONSTRUCT CONCRETE CURB RAMP OF TYPE NOTED PER DETAIL SHEET 14.

(34) MATCH NEW CURB TO EXISTING CURB. CURB GRADES ARE BASED ON A 0.5' EXPOSURE. TRANSITION CURB EXPOSURE ON NEW CURB TO MATCH EXISTING CURB AT LEAST 3-FEET PRIOR TO MATCH POINT. IF NECESSARY, SAWCUT EXISTING CURB TO CREATE A CLEAN, UNDISTURBED EDGE.

(35) MATCH NEW SIDEWALK TO EXISTING SIDEWALK. TRANSITION NEW SIDEWALK WIDTH/LOCATION TO MATCH EXISTING WIDTH/LOCATION AT 5:1 PRIOR TO MATCH LINE. IF NECESSARY, SAWCUT EXISTING SIDEWALK TO CREATE A CLEAN, UNDISTURBED EDGE.

(36) CONSTRUCT 6'X6' A.C. LEVEL LANDING AND 6' TRANSITION RAMP FROM END OF SIDEWALK TO SHOULDER. 0.25' MIN CLASS 'A' A.C. OVER 0.4' CRUSHED ROCK.

(37) CONSTRUCT A.C. PAVEMENT RECONSTRUCTION/WIDENING. REFER TO TYPICAL SECTIONS ON SHEETS 8.

(38) CONSTRUCT A.C. OVERLAY. REFER TO TYPICAL SECTIONS ON SHEETS 8.

(39) RELOCATE (R), PROTECT (P), OR ADJUST (A) EXISTING TRAFFIC SIGNAL POLE, PER TRAFFIC SIGNAL PLANS, SHEETS 94 TO 99.

(40) CONSTRUCT EXTRUDED CURB PER CLARK COUNTY STD. DRAWING F18A.

(42) INSTALL FENCE AT LOCATIONS NOTED ON THE PLANS OR AS DIRECTED IN THE FIELD. SEE TYPICAL SECTION ON SHEET 12.

(43) INSTALL FENCE ON RETAINING WALL. SEE RETAINING WALL TABLES FOR DETAILS.

(44) CONSTRUCT RETAINING WALL PER PLAN AND PROFILE ON SHEET 42 TO 56. SEE TYPICAL DETAILS ON SHEETS 40 AND 41.

(54) CONSTRUCT STD. STORM MANHOLE, TYPE 1 WITH STANDARD MANHOLE RING AND COVER PER DETAIL SHEET 17.

(55) CONSTRUCT STD. OVERSIZED STORM MANHOLE, TYPE 2 WITH STANDARD MANHOLE RING AND COVER PER DETAIL SHEET 17.

(56) CONSTRUCT STD. FLAT TOP STORM MANHOLE, TYPE 3 WITH STANDARD MANHOLE RING AND COVER PER DETAIL SHEET 17

(57) CONSTRUCT PRIVATE CATCH BASIN PER DETAIL ON SHEET 19. INSTALL STORM PIPE AS SHOWN AND PER "STORM DRAINAGE DATA" INFORMATION TABLE THIS SHEET.

(58) CONSTRUCT TYPE 1 COMBINATION CURB INLET PER DETAIL ON SHEET 18. INSTALL STORM PIPE AS SHOWN AND PER "STORM DRAINAGE DATA" INFORMATION TABLE THIS SHEET.

(59) CONSTRUCT CATCH BASIN PER DETAIL ON SHEET 18.

(60) CONSTRUCT DITCH INLET PER DETAIL ON SHEET 19. INSTALL STORM PIPE AS SHOWN AND PER "STORM DRAINAGE DATA" INFORMATION TABLE THIS SHEET.

(61) INSTALL STORM PIPE.

(62) INSTALL TRENCH DRAIN AND STORM PIPE. SEE DETAILS ON SHEET 19.

(63) REMOVE EXISTING STORM SEWER PIPE AND/OR STRUCTURES. BACKFILL AND COMPACT VOID LEFT FROM EXISTING PIPE AS NECESSARY.

(64) EXISTING STORM PIPE AND/OR STRUCTURE TO REMAIN.

(65) PLUG AND ABANDON EXISTING STORM PIPE.

(66) ADJUST EXISTING MANHOLE CASTING WITH ADJUSTING RINGS/CATCH BASIN/VALVE BOX RIM TO FINISH GRADE.

(67) CONNECT TO EXISTING STORM PIPE OR STRUCTURE PER DETAIL ON SHEET 19.

(68) INSTALL STORM FILTER VAULT. SEE DETAIL SHEET 38.

(69) CONSTRUCT TYPE 1 CURB INLET PER DETAIL ON SHEET 18. INSTALL STORM PIPE AS SHOWN AND PER "STORM DRAINAGE DATA" INFORMATION TABLE THIS SHEET.

(73) CONSTRUCT ROADSIDE DITCH, GRADE TO DRAIN TO INLET.

(80) RELOCATE (R), PROTECT (P) ADJUST (A) EXISTING SANITARY SEWER CLEANOUT, WATER VALVE OR WATER METER BOX AND/OR SERVICE AS REQUIRED AND DIRECTED. ALL DISTURBED SERVICE LINES SHALL BE REPAIRED AS REQUIRED.

(81) EXISTING FIRE HYDRANT TO BE RELOCATED (R), PROTECTED (P), OR ADJUSTED (A). COORDINATE WITH CLARK PUBLIC UTILITIES.

(82) PROTECT EXISTING WATER LINE.

(90) RELOCATE (R), PROTECT (P), OR ADJUST (A) EXISTING IRRIGATION AS REQUIRED AND DIRECTED. ALL DISTURBED IRRIGATION SHALL BE REPAIRED AS REQUIRED.

(91) ADJUST EXISTING SANITARY OR STORM MANHOLE TO FINISH GRADE BY REMOVING CONE SECTION AND ADDITNG FULL MANHOLE SECTION.

(92) EXTEND EXISTING SEWER LATERAL TO PROPOSED R/W LINE AND INSTALL CLEANOUT.

(93) PROTECT OR REMOVE EXISTING SEPTIC SYSTEM AND INSTALL NEW SEWER SERVICE TO PROPERTY AS DIRECTED BY ENGINEER.

FOR INFORMATIONAL PURPOSES ONLY

ALL PLAN DETAIL AND INFORMATION IS NOT SHOWN ON THIS 90% COMPLETED SET OF PLANS.

90% SUBMITTAL - JULY 2004

DESIGNED:	TSH
DRAWN:	NPR/RAF
CRP:	330222
HOR.	1" = 20'
VERT.	1" = 5'
DATE:	7/2004
DWG:	
SHEET	62 OF 99

CALL 48 HOURS BEFORE YOU DIG 1-800-553-4344 "It's the Law" NORTHWEST UTILITIES NOTIFICATION CENTER

Harper Houf Peterson Righellis Inc.
ENGINEERS PLANNERS SURVEYORS
1104 MAIN STREET, SUITE 100, VANCOUVER, WA 98660
TEL 360.750.1131 www.hhpr.com FAX 360.750.1141

DESIGN & ENGINEERING DIVISION

NE 88TH STREET
STA 120+50 TO STA 125+00

proud past, promising future

CLARK COUNTY WASHINGTON

P:\Ck-12 (NE 88th)\CRK12-D\WGS\ Ck12-RD\WEST2.DWG

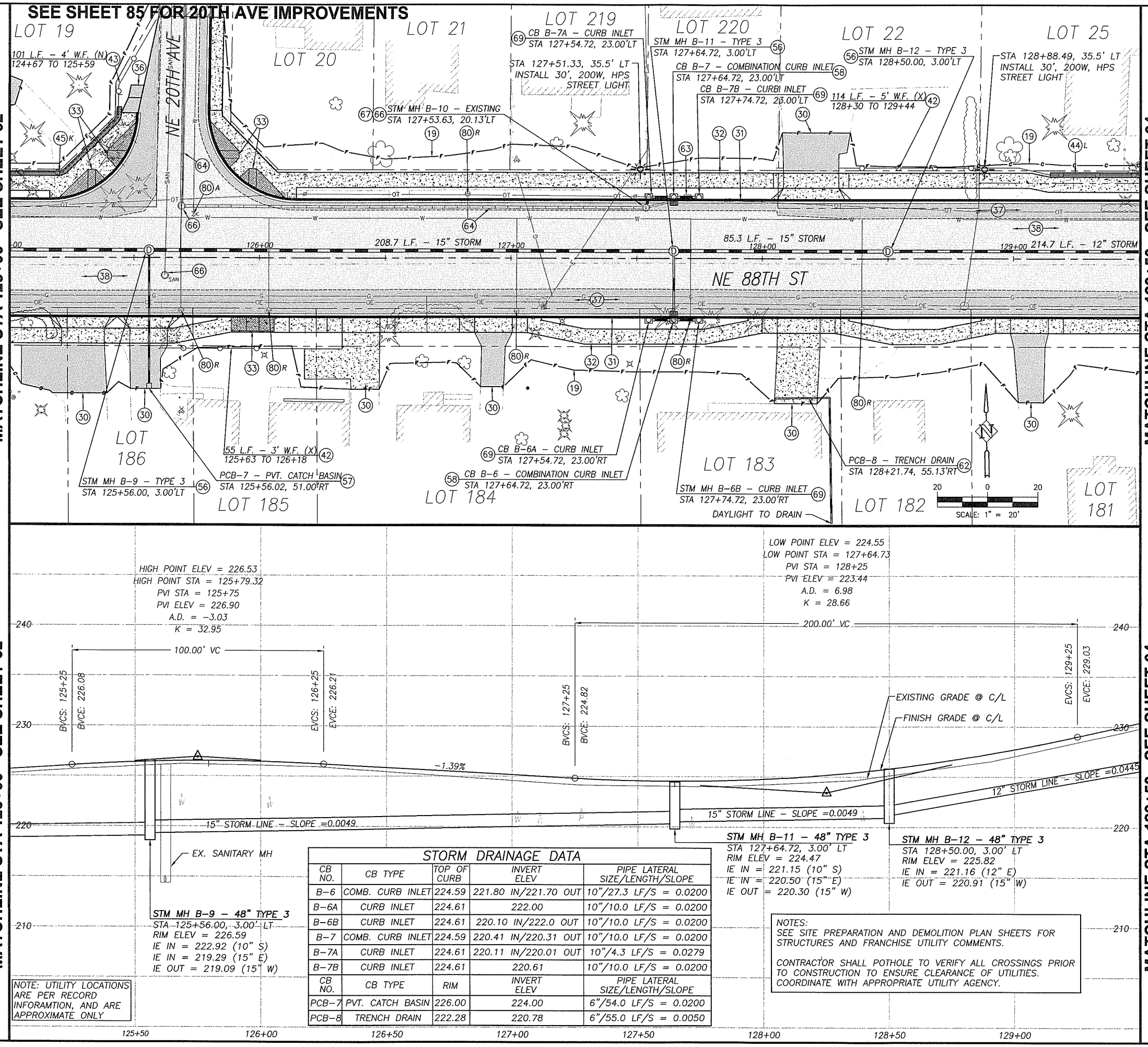

NOTE: UTILITY LOCATIONS ARE PER RECORD INFORAMTION, AND ARE APPROXIMATE ONLY

STORM DRAINAGE DATA

CB NO.	CB TYPE	TOP OF CURB	INVERT ELEV	PIPE LATERAL SIZE/LENGTH/SLOPE
B-6	COMB. CURB INLET	224.59	221.80 IN/221.70 OUT	10"/27.3 LF/S = 0.0200
B-6A	CURB INLET	224.61	222.00	10"/10.0 LF/S = 0.0200
B-6B	CURB INLET	224.61	220.10 IN/222.0 OUT	10"/10.0 LF/S = 0.0200
B-7	COMB. CURB INLET	224.59	220.41 IN/220.31 OUT	10"/10.0 LF/S = 0.0200
B-7A	CURB INLET	224.61	220.11 IN/220.01 OUT	10"/4.3 LF/S = 0.0279
B-7B	CURB INLET	224.61	220.61	10"/10.0 LF/S = 0.0200
CB NO.	CB TYPE	RIM	INVERT ELEV	PIPE LATERAL SIZE/LENGTH/SLOPE
PCB-7	PVT. CATCH BASIN	226.00	224.00	6"/54.0 LF/S = 0.0200
PCB-8	TRENCH DRAIN	222.28	220.78	6"/55.0 LF/S = 0.0050

NOTES:
SEE SITE PREPARATION AND DEMOLITION PLAN SHEETS FOR STRUCTURES AND FRANCHISE UTILITY COMMENTS.

CONTRACTOR SHALL POTHOLE TO VERIFY ALL CROSSINGS PRIOR TO CONSTRUCTION TO ENSURE CLEARANCE OF UTILITIES. COORDINATE WITH APPROPRIATE UTILITY AGENCY.

P:\Clrk-12 NE 88th\CRK12-DWG\S1 Crk12-RDWEST2.DWG

CONSTRUCTION NOTES:

(10) TELEPHONE RISERS AND/OR POLES TO BE REMOVED OR RELOCATED BY OTHERS, UNLESS OTHERWISE NOTED WITH (P) PROTECT. TELEPHONE CABLE TO BE ABANDONED. COORDINATE WORK WITH RON IMAI, US WEST, BY CALLING (360) 699-3546.
(19) LIMITS OF GRADING
(30) CONSTRUCT DRIVEWAY PER DETAIL AND "DRIVEWAY APPROACH SCHEDULE" TABLE ON SHEET 11.
(31) CONSTRUCT CONCRETE CURB AND GUTTER PER DETAIL SHEET 12.
(32) CONSTRUCT CONCRETE SIDEWALK PER DETAIL SHEET 14.
(33) CONSTRUCT CONCRETE CURB RAMP OF TYPE NOTED PER DETAIL SHEET 14.
(34) MATCH NEW CURB TO EXISTING CURB. CURB GRADES ARE BASED ON A 0.5' EXPOSURE. TRANSITION CURB EXPOSURE ON NEW CURB TO MATCH EXISTING CURB AT LEAST 3-FEET PRIOR TO MATCH POINT. IF NECESSARY, SAWCUT EXISTING CURB TO CREATE A CLEAN, UNDISTURBED EDGE.
(35) MATCH NEW SIDEWALK TO EXISTING SIDEWALK. TRANSITION NEW SIDEWALK WIDTH/LOCATION TO MATCH EXISTING WIDTH/LOCATION AT 5:1 PRIOR TO MATCH LINE. IF NECESSARY, SAWCUT EXISTING SIDEWALK TO CREATE A CLEAN, UNDISTURBED EDGE.
(36) CONSTRUCT 6'X6' A.C. LEVEL LANDING AND 6' TRANSITION RAMP FROM END OF SIDEWALK TO SHOULDER. 0.25' MIN CLASS 'A' A.C. OVER 0.4' CRUSHED ROCK.
(37) CONSTRUCT A.C. PAVEMENT RECONSTRUCTION/WIDENING. REFER TO TYPICAL SECTIONS ON SHEETS 8.
(38) CONSTRUCT A.C. OVERLAY. REFER TO TYPICAL SECTIONS ON SHEETS 8.
(39) RELOCATE (R), PROTECT (P), OR ADJUST (A) EXISTING TRAFFIC SIGNAL POLE, PER TRAFFIC SIGNAL PLANS, SHEETS 94 TO 99.
(40) CONSTRUCT EXTRUDED CURB PER CLARK COUNTY STD. DRAWING F18A.
(42) INSTALL FENCE AT LOCATIONS NOTED ON THE PLANS OR AS DIRECTED IN THE FIELD. SEE TYPICAL SECTION ON SHEET 12.
(43) INSTALL FENCE ON RETAINING WALL. SEE RETAINING WALL TABLES FOR DETAILS.
(44) CONSTRUCT RETAINING WALL PER PLAN AND PROFILE ON SHEET 42 TO 56. SEE TYPICAL DETAILS ON SHEETS 40 AND 41.
(54) CONSTRUCT STD. STORM MANHOLE, TYPE 1 WITH STANDARD MANHOLE RING AND COVER PER DETAIL SHEET 17.
(55) CONSTRUCT STD. OVERSIZED STORM MANHOLE, TYPE 2 WITH STANDARD MANHOLE RING AND COVER PER DETAIL SHEET 17.
(56) CONSTRUCT STD. FLAT TOP STORM MANHOLE, TYPE 3 WITH STANDARD MANHOLE RING AND COVER PER DETAIL SHEET 17
(57) CONSTRUCT PRIVATE CATCH BASIN PER DETAIL ON SHEET 19. INSTALL STORM PIPE AS SHOWN AND PER "STORM DRAINAGE DATA" INFORMATION TABLE THIS SHEET.
(58) CONSTRUCT TYPE 1 COMBINATION CURB INLET PER DETAIL ON SHEET 18. INSTALL STORM PIPE AS SHOWN AND PER "STORM DRAINAGE DATA" INFORMATION TABLE THIS SHEET.
(59) CONSTRUCT CATCH BASIN PER DETAIL ON SHEET 18.
(60) CONSTRUCT DITCH INLET PER DETAIL ON SHEET 19. INSTALL STORM PIPE AS SHOWN AND PER "STORM DRAINAGE DATA" INFORMATION TABLE THIS SHEET.
(61) INSTALL STORM PIPE.
(62) INSTALL TRENCH DRAIN AND STORM PIPE. SEE DETAILS ON SHEET 19.
(63) REMOVE EXISTING STORM SEWER PIPE AND/OR STRUCTURES. BACKFILL AND COMPACT VOID LEFT FROM EXISTING PIPE AS NECESSARY.
(64) EXISTING STORM PIPE AND/OR STRUCTURE TO REMAIN.
(65) PLUG AND ABANDON EXISTING STORM PIPE.
(66) ADJUST EXISTING MANHOLE CASTING WITH ADJUSTING RINGS/CATCH BASIN/VALVE BOX RIM TO FINISH GRADE.
(67) CONNECT TO EXISTING STORM PIPE OR STRUCTURE PER DETAIL ON SHEET 19.
(68) INSTALL STORM FILTER VAULT. SEE DETAIL SHEET 38.
(69) CONSTRUCT TYPE 1 CURB INLET PER DETAIL ON SHEET 18. INSTALL STORM PIPE AS SHOWN AND PER "STORM DRAINAGE DATA" INFORMATION TABLE THIS SHEET.
(73) CONSTRUCT ROADSIDE DITCH, GRADE TO DRAIN TO INLET.
(80) RELOCATE (R), PROTECT (P) ADJUST (A) EXISTING SANITARY SEWER CLEANOUT, WATER VALVE OR WATER METER BOX AND/OR SERVICE AS REQUIRED AND DIRECTED. ALL DISTURBED SERVICE LINES SHALL BE REPAIRED AS REQUIRED.
(81) EXISTING FIRE HYDRANT TO BE RELOCATED (R), PROTECTED (P), OR ADJUSTED (A). COORDINATE WITH CLARK PUBLIC UTILITIES.
(82) PROTECT EXISTING WATER LINE.
(90) RELOCATE (R), PROTECT (P), OR ADJUST (A) EXISTING IRRIGATION AS REQUIRED AND DIRECTED. ALL DISTURBED IRRIGATION SHALL BE REPAIRED AS REQUIRED.
(91) ADJUST EXISTING SANITARY OR STORM MANHOLE TO FINISH GRADE BY REMOVING CONE SECTION AND ADDITNG FULL MANHOLE SECTION.
(92) EXTEND EXISTING SEWER LATERAL TO PROPOSED R/W LINE AND INSTALL CLEANOUT.
(93) PROTECT OR REMOVE EXISTING SEPTIC SYSTEM AND INSTALL NEW SEWER SERVICE TO PROPERTY AS DIRECTED BY ENGINEER.

FOR INFORMATIONAL PURPOSES ONLY
ALL PLAN DETAIL AND INFORMATION IS NOT SHOWN ON THIS 90% COMPLETED SET OF PLANS.
90% SUBMITTAL - JULY 2004

DESIGNED:	TSH
DRAWN:	NPR/RAF
CRP:	330222
HOR.	1" = 20'
VERT.	1" = 5'
DATE:	7/2004
DWG:	
SHEET	63 OF 99

CALL 48 HOURS BEFORE YOU DIG 1-800-553-4344 "It's the Law" NORTHWEST UTILITIES NOTIFICATION CENTER

Harper Houf Peterson Righellis Inc.
ENGINEERS · PLANNERS · SURVEYORS
1104 MAIN STREET, SUITE 100, VANCOUVER, WA 98660
TEL 360.750.1131 www.hhpr.com FAX 360.750.1141

DESIGN & ENGINEERING DIVISION

NE 88TH STREET
STA 125+00 TO STA 129+50

proud past, promising future
CLARK COUNTY WASHINGTON

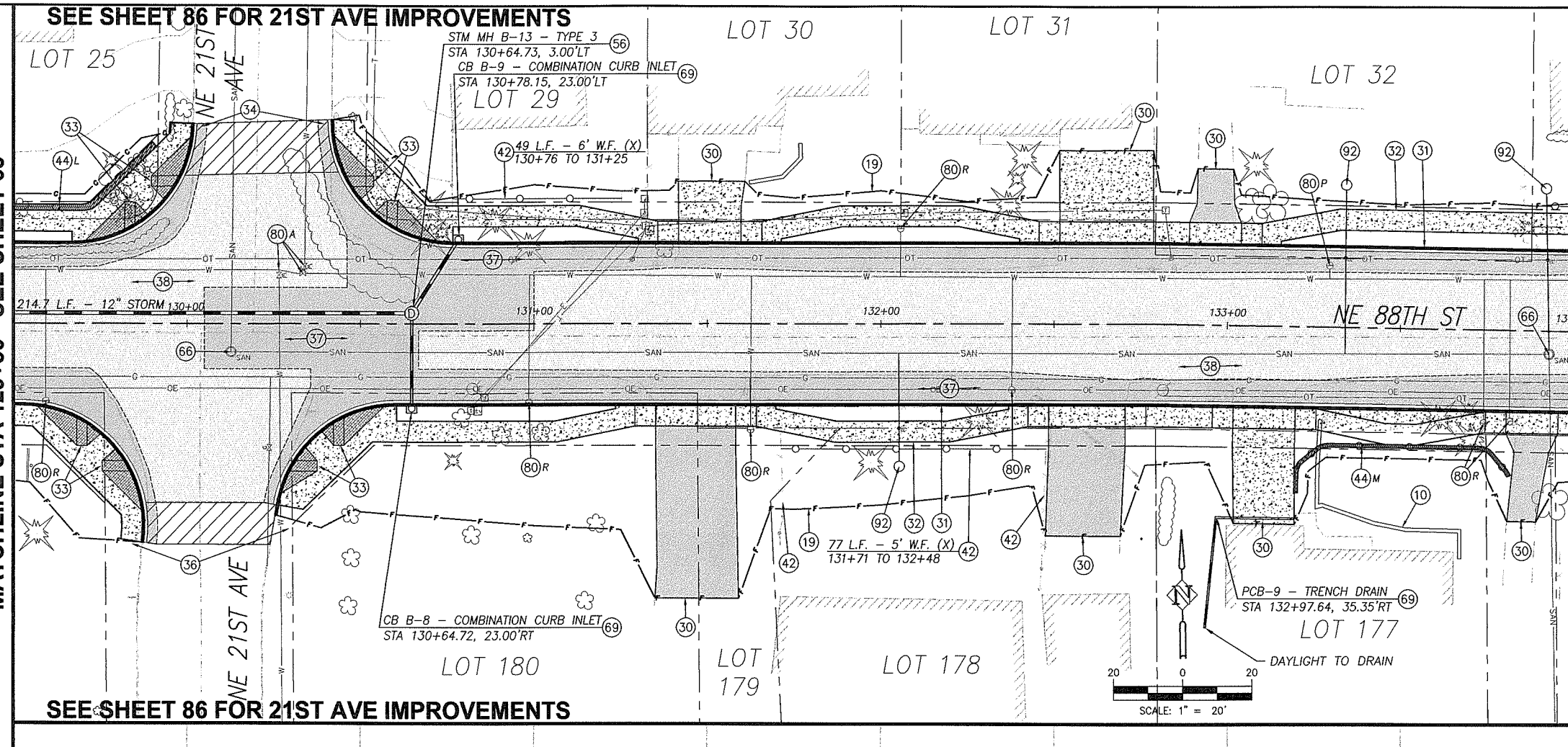

MATCHLINE STA 129+50 - SEE SHEET 63

MATCHLINE STA 134+00 - SEE SHEET 65

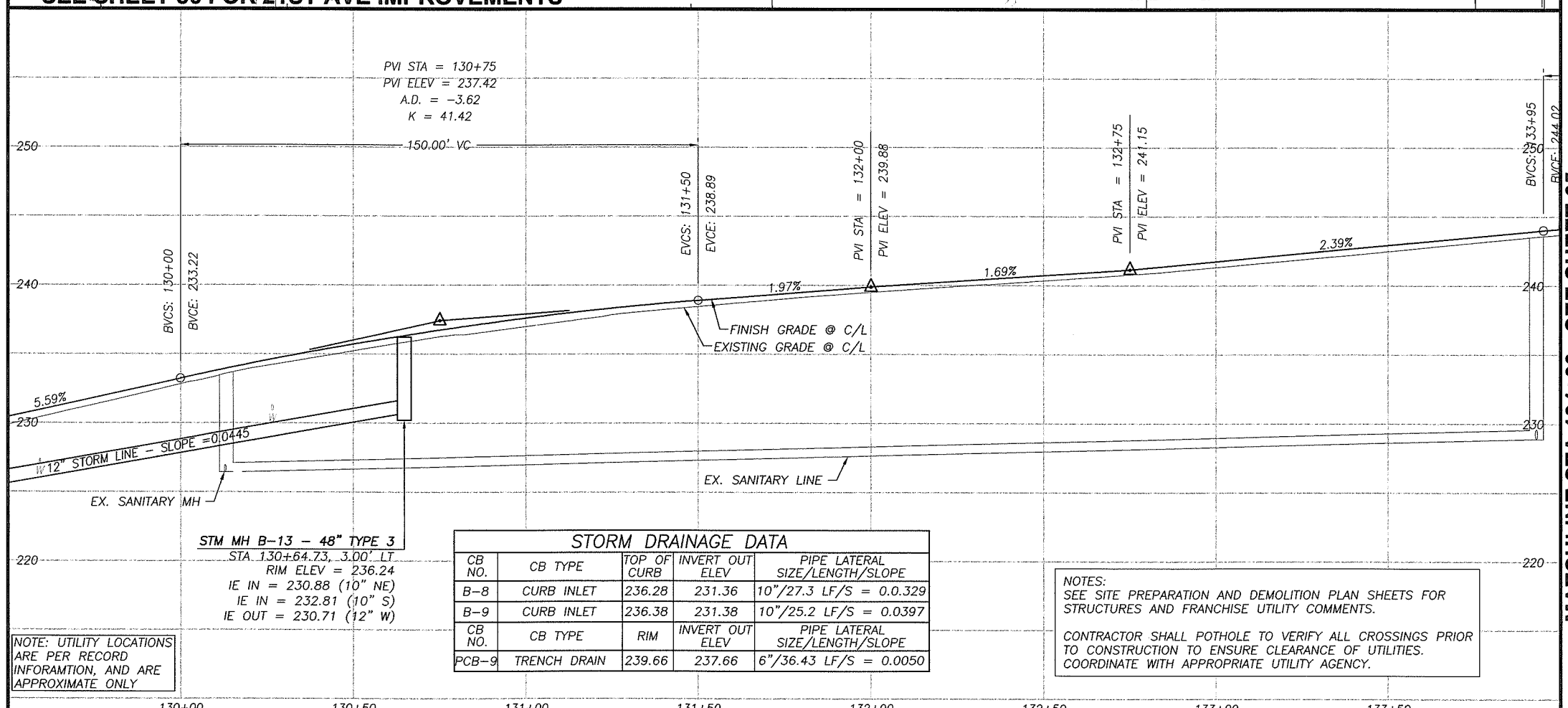

NOTE: UTILITY LOCATIONS ARE PER RECORD INFORAMTION, AND ARE APPROXIMATE ONLY

STORM DRAINAGE DATA

CB NO.	CB TYPE	TOP OF CURB	INVERT OUT ELEV	PIPE LATERAL SIZE/LENGTH/SLOPE
B-8	CURB INLET	236.28	231.36	10"/27.3 LF/S = 0.0.329
B-9	CURB INLET	236.38	231.38	10"/25.2 LF/S = 0.0397
CB NO.	CB TYPE	RIM	INVERT OUT ELEV	PIPE LATERAL SIZE/LENGTH/SLOPE
PCB-9	TRENCH DRAIN	239.66	237.66	6"/36.43 LF/S = 0.0050

NOTES:
SEE SITE PREPARATION AND DEMOLITION PLAN SHEETS FOR STRUCTURES AND FRANCHISE UTILITY COMMENTS.

CONTRACTOR SHALL POTHOLE TO VERIFY ALL CROSSINGS PRIOR TO CONSTRUCTION TO ENSURE CLEARANCE OF UTILITIES. COORDINATE WITH APPROPRIATE UTILITY AGENCY.

CONSTRUCTION NOTES:

(10) TELEPHONE RISERS AND/OR POLES TO BE REMOVED OR RELOCATED BY OTHERS, UNLESS OTHERWISE NOTED WITH (P) PROTECT. TELEPHONE CABLE TO BE ABANDONED. COORDINATE WORK WITH RON IMAI, US WEST, BY CALLING (360) 699-3546.

(19) LIMITS OF GRADING

(30) CONSTRUCT DRIVEWAY PER DETAIL AND "DRIVEWAY APPROACH SCHEDULE" TABLE ON SHEET 11.

(31) CONSTRUCT CONCRETE CURB AND GUTTER PER DETAIL SHEET 12.

(32) CONSTRUCT CONCRETE SIDEWALK PER DETAIL SHEET 14.

(33) CONSTRUCT CONCRETE CURB RAMP OF TYPE NOTED PER DETAIL SHEET 14.

(34) MATCH NEW CURB TO EXISTING CURB. CURB GRADES ARE BASED ON A 0.5' EXPOSURE. TRANSITION CURB EXPOSURE ON NEW CURB TO MATCH EXISTING CURB AT LEAST 3-FEET PRIOR TO MATCH POINT. IF NECESSARY, SAWCUT EXISTING CURB TO CREATE A CLEAN, UNDISTURBED EDGE.

(35) MATCH NEW SIDEWALK TO EXISTING SIDEWALK. TRANSITION NEW SIDEWALK WIDTH/LOCATION TO MATCH EXISTING WIDTH/LOCATION AT 5:1 PRIOR TO MATCH LINE. IF NECESSARY, SAWCUT EXISTING SIDEWALK TO CREATE A CLEAN, UNDISTURBED EDGE.

(36) CONSTRUCT 6'X6' A.C. LEVEL LANDING AND 6' TRANSITION RAMP FROM END OF SIDEWALK TO SHOULDER. 0.25' MIN CLASS 'A' A.C. OVER 0.4' CRUSHED ROCK.

(37) CONSTRUCT A.C. PAVEMENT RECONSTRUCTION/WIDENING. REFER TO TYPICAL SECTIONS ON SHEETS 8.

(38) CONSTRUCT A.C. OVERLAY. REFER TO TYPICAL SECTIONS ON SHEETS 8.

(39) RELOCATE (R), PROTECT (P), OR ADJUST (A) EXISTING TRAFFIC SIGNAL POLE, PER TRAFFIC SIGNAL PLANS, SHEETS 94 TO 99.

(40) CONSTRUCT EXTRUDED CURB PER CLARK COUNTY STD. DRAWING F18A.

(42) INSTALL FENCE AT LOCATIONS NOTED ON THE PLANS OR AS DIRECTED IN THE FIELD. SEE TYPICAL SECTION ON SHEET 12.

(43) INSTALL FENCE ON RETAINING WALL. SEE RETAINING WALL TABLES FOR DETAILS.

(44) CONSTRUCT RETAINING WALL PER PLAN AND PROFILE ON SHEET 42 TO 56. SEE TYPICAL DETAILS ON SHEETS 40 AND 41.

(54) CONSTRUCT STD. STORM MANHOLE, TYPE 1 WITH STANDARD MANHOLE RING AND COVER PER DETAIL SHEET 17.

(55) CONSTRUCT STD. OVERSIZED STORM MANHOLE, TYPE 2 WITH STANDARD MANHOLE RING AND COVER PER DETAIL SHEET 17.

(56) CONSTRUCT STD. FLAT TOP STORM MANHOLE, TYPE 3 WITH STANDARD MANHOLE RING AND COVER PER DETAIL SHEET 17

(57) CONSTRUCT PRIVATE CATCH BASIN PER DETAIL ON SHEET 19. INSTALL STORM PIPE AS SHOWN AND PER "STORM DRAINAGE DATA" INFORMATION TABLE THIS SHEET.

(58) CONSTRUCT TYPE 1 COMBINATION CURB INLET PER DETAIL ON SHEET 18. INSTALL STORM PIPE AS SHOWN AND PER "STORM DRAINAGE DATA" INFORMATION TABLE THIS SHEET.

(59) CONSTRUCT CATCH BASIN PER DETAIL ON SHEET 18.

(60) CONSTRUCT DITCH INLET PER DETAIL ON SHEET 19. INSTALL STORM PIPE AS SHOWN AND PER "STORM DRAINAGE DATA" INFORMATION TABLE THIS SHEET.

(61) INSTALL STORM PIPE.

(62) INSTALL TRENCH DRAIN AND STORM PIPE. SEE DETAILS ON SHEET 19.

(63) REMOVE EXISTING STORM SEWER PIPE AND/OR STRUCTURES. BACKFILL AND COMPACT VOID LEFT FROM EXISTING PIPE AS NECESSARY.

(64) EXISTING STORM PIPE AND/OR STRUCTURE TO REMAIN.

(65) PLUG AND ABANDON EXISTING STORM PIPE.

(66) ADJUST EXISTING MANHOLE CASTING WITH ADJUSTING RINGS/CATCH BASIN/VALVE BOX RIM TO FINISH GRADE.

(67) CONNECT TO EXISTING STORM PIPE OR STRUCTURE PER DETAIL ON SHEET 19.

(68) INSTALL STORM FILTER VAULT. SEE DETAIL SHEET 38.

(69) CONSTRUCT TYPE 1 CURB INLET PER DETAIL ON SHEET 18. INSTALL STORM PIPE AS SHOWN AND PER "STORM DRAINAGE DATA" INFORMATION TABLE THIS SHEET.

(73) CONSTRUCT ROADSIDE DITCH, GRADE TO DRAIN TO INLET.

(80) RELOCATE (R), PROTECT (P) ADJUST (A) EXISTING SANITARY SEWER CLEANOUT, WATER VALVE OR WATER METER BOX AND/OR SERVICE AS REQUIRED AND DIRECTED. ALL DISTURBED SERVICE LINES SHALL BE REPAIRED AS REQUIRED.

(81) EXISTING FIRE HYDRANT TO BE RELOCATED (R), PROTECTED (P), OR ADJUSTED (A). COORDINATE WITH CLARK PUBLIC UTILITIES.

(82) PROTECT EXISTING WATER LINE.

(90) RELOCATE (R), PROTECT (P), OR ADJUST (A) EXISTING IRRIGATION AS REQUIRED AND DIRECTED. ALL DISTURBED IRRIGATION SHALL BE REPAIRED AS REQUIRED.

(91) ADJUST EXISTING SANITARY OR STORM MANHOLE TO FINISH GRADE BY REMOVING CONE SECTION AND ADDITNG FULL MANHOLE SECTION.

(92) EXTEND EXISTING SEWER LATERAL TO PROPOSED R/W LINE AND INSTALL CLEANOUT.

(93) PROTECT OR REMOVE EXISTING SEPTIC SYSTEM AND INSTALL NEW SEWER SERVICE TO PROPERTY AS DIRECTED BY ENGINEER.

FOR INFORMATIONAL PURPOSES ONLY

ALL PLAN DETAIL AND INFORMATION IS NOT SHOWN ON THIS 90% COMPLETED SET OF PLANS.

90% SUBMITTAL - JULY 2004

DESIGNED:	TSH
DRAWN:	NPR/RAF
CRP:	330222
HOR.	1" = 20'
VERT.	1" = 5'
DATE:	7/2004
DWG:	
SHEET	64 OF 99

CALL 48 HOURS BEFORE YOU DIG
1-800-553-4344
"It's the Law"
NORTHWEST UTILITIES NOTIFICATION CENTER

Harper Houf Peterson Righellis Inc.
ENGINEERS PLANNERS SURVEYORS
1104 MAIN STREET, Suite 100, VANCOUVER, WA 98660
TEL 360.750.1131 www.hhpr.com FAX 360.750.1141

DESIGN & ENGINEERING DIVISION

NE 88TH STREET
STA 129+50 TO STA 134+00

proud past, promising future
CLARK COUNTY WASHINGTON

P:\Clk-12 (NE 88th)\CRK12-DWGS\ Clk12-RDWEST2.DWG

MATCHLINE STA 134+00 - SEE SHEET 64

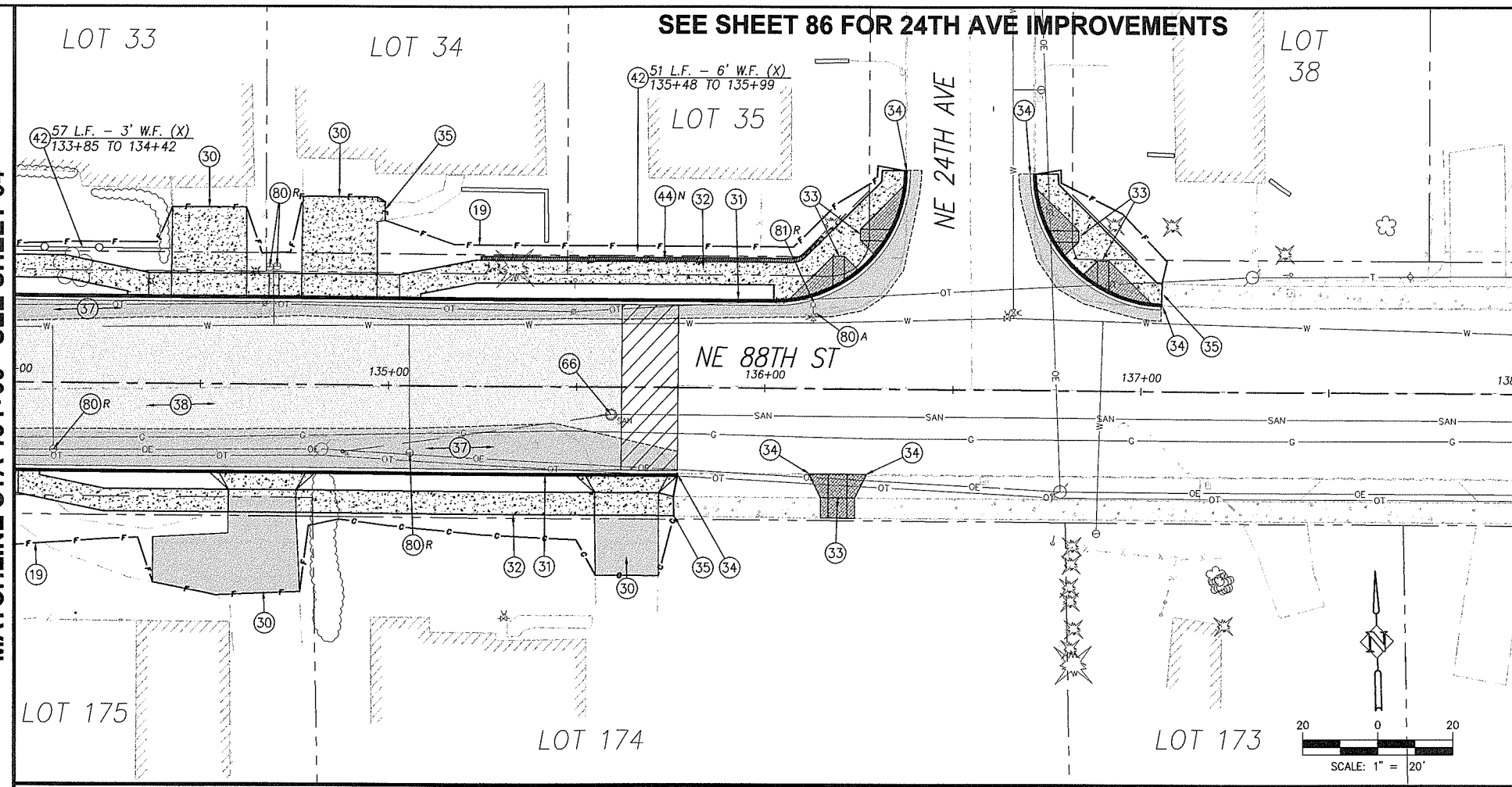

MATCHLINE STA 138+00 - SEE SHEET 66

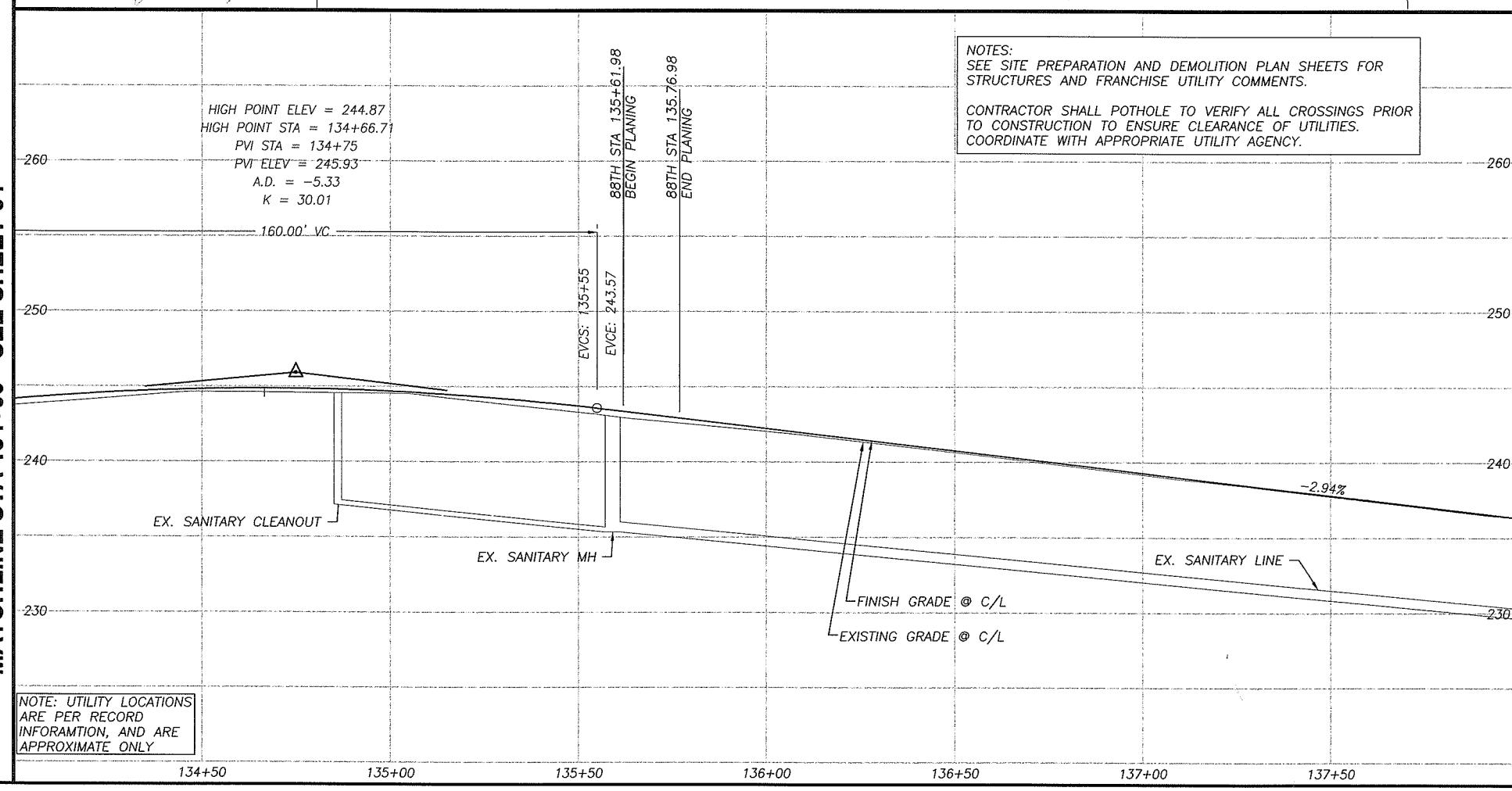

NOTE: UTILITY LOCATIONS ARE PER RECORD INFORAMTION, AND ARE APPROXIMATE ONLY

MATCHLINE STA 134+00 - SEE SHEET 64

MATCHLINE STA 138+00 - SEE SHEET 66

P:\Clk-12 (NE 88th)\CRK12-DWGS\ Ckt12-RDWEST2.DWG

CONSTRUCTION NOTES:

(10) TELEPHONE RISERS AND/OR POLES TO BE REMOVED OR RELOCATED BY OTHERS, UNLESS OTHERWISE NOTED WITH (P) PROTECT. TELEPHONE CABLE TO BE ABANDONED. COORDINATE WORK WITH RON IMAI, US WEST, BY CALLING (360) 699–3546.

(19) LIMITS OF GRADING

(30) CONSTRUCT DRIVEWAY PER DETAIL AND "DRIVEWAY APPROACH SCHEDULE" TABLE ON SHEET 11.

(31) CONSTRUCT CONCRETE CURB AND GUTTER PER DETAIL SHEET 12.

(32) CONSTRUCT CONCRETE SIDEWALK PER DETAIL SHEET 14.

(33) CONSTRUCT CONCRETE CURB RAMP OF TYPE NOTED PER DETAIL SHEET 14.

(34) MATCH NEW CURB TO EXISTING CURB. CURB GRADES ARE BASED ON A 0.5' EXPOSURE. TRANSITION CURB EXPOSURE ON NEW CURB TO MATCH EXISTING CURB AT LEAST 3–FEET PRIOR TO MATCH POINT. IF NECESSARY, SAWCUT EXISTING CURB TO CREATE A CLEAN, UNDISTURBED EDGE.

(35) MATCH NEW SIDEWALK TO EXISTING SIDEWALK. TRANSITION NEW SIDEWALK WIDTH/LOCATION TO MATCH EXISTING WIDTH/LOCATION AT 5:1 PRIOR TO MATCH LINE. IF NECESSARY, SAWCUT EXISTING SIDEWALK TO CREATE A CLEAN, UNDISTURBED EDGE.

(36) CONSTRUCT 6'X6' A.C. LEVEL LANDING AND 6' TRANSITION RAMP FROM END OF SIDEWALK TO SHOULDER. 0.25' MIN CLASS 'A' A.C. OVER 0.4' CRUSHED ROCK.

(37) CONSTRUCT A.C. PAVEMENT RECONSTRUCTION/WIDENING. REFER TO TYPICAL SECTIONS ON SHEETS 8.

(38) CONSTRUCT A.C. OVERLAY. REFER TO TYPICAL SECTIONS ON SHEETS 8.

(39) RELOCATE (R), PROTECT (P), OR ADJUST (A) EXISTING TRAFFIC SIGNAL POLE, PER TRAFFIC SIGNAL PLANS, SHEETS 94 TO 99.

(40) CONSTRUCT EXTRUDED CURB PER CLARK COUNTY STD. DRAWING F18A.

(42) INSTALL FENCE AT LOCATIONS NOTED ON THE PLANS OR AS DIRECTED IN THE FIELD. SEE TYPICAL SECTION ON SHEET 12.

(43) INSTALL FENCE ON RETAINING WALL. SEE RETAINING WALL TABLES FOR DETAILS.

(44) CONSTRUCT RETAINING WALL PER PLAN AND PROFILE ON SHEET 42 TO 56. SEE TYPICAL DETAILS ON SHEETS 40 AND 41.

(54) CONSTRUCT STD. STORM MANHOLE, TYPE 1 WITH STANDARD MANHOLE RING AND COVER PER DETAIL SHEET 17.

(55) CONSTRUCT STD. OVERSIZED STORM MANHOLE, TYPE 2 WITH STANDARD MANHOLE RING AND COVER PER DETAIL SHEET 17.

(56) CONSTRUCT STD. FLAT TOP STORM MANHOLE, TYPE 3 WITH STANDARD MANHOLE RING AND COVER PER DETAIL SHEET 17

(57) CONSTRUCT PRIVATE CATCH BASIN PER DETAIL ON SHEET 19. INSTALL STORM PIPE AS SHOWN AND PER "STORM DRAINAGE DATA" INFORMATION TABLE THIS SHEET.

(58) CONSTRUCT TYPE 1 COMBINATION CURB INLET PER DETAIL ON SHEET 18. INSTALL STORM PIPE AS SHOWN AND PER "STORM DRAINAGE DATA" INFORMATION TABLE THIS SHEET.

(59) CONSTRUCT CATCH BASIN PER DETAIL ON SHEET 18.

(60) CONSTRUCT DITCH INLET PER DETAIL ON SHEET 19. INSTALL STORM PIPE AS SHOWN AND PER "STORM DRAINAGE DATA" INFORMATION TABLE THIS SHEET.

(61) INSTALL STORM PIPE.

(62) INSTALL TRENCH DRAIN AND STORM PIPE. SEE DETAILS ON SHEET 19.

(63) REMOVE EXISTING STORM SEWER PIPE AND/OR STRUCTURES. BACKFILL AND COMPACT VOID LEFT FROM EXISTING PIPE AS NECESSARY.

(64) EXISTING STORM PIPE AND/OR STRUCTURE TO REMAIN.

(65) PLUG AND ABANDON EXISTING STORM PIPE.

(66) ADJUST EXISTING MANHOLE CASTING WITH ADJUSTING RINGS/CATCH BASIN/VALVE BOX RIM TO FINISH GRADE.

(67) CONNECT TO EXISTING STORM PIPE OR STRUCTURE PER DETAIL ON SHEET 19.

(68) INSTALL STORM FILTER VAULT. SEE DETAIL SHEET 38.

(69) CONSTRUCT TYPE 1 CURB INLET PER DETAIL ON SHEET 18. INSTALL STORM PIPE AS SHOWN AND PER "STORM DRAINAGE DATA" INFORMATION TABLE THIS SHEET.

(73) CONSTRUCT ROADSIDE DITCH, GRADE TO DRAIN TO INLET.

(80) RELOCATE (R), PROTECT (P) ADJUST (A) EXISTING SANITARY SEWER CLEANOUT, WATER VALVE OR WATER METER BOX AND/OR SERVICE AS REQUIRED AND DIRECTED. ALL DISTURBED SERVICE LINES SHALL BE REPAIRED AS REQUIRED.

(81) EXISTING FIRE HYDRANT TO BE RELOCATED (R), PROTECTED (P), OR ADJUSTED (A). COORDINATE WITH CLARK PUBLIC UTILITIES.

(82) PROTECT EXISTING WATER LINE.

(90) RELOCATE (R), PROTECT (P), OR ADJUST (A) EXISTING IRRIGATION AS REQUIRED AND DIRECTED. ALL DISTURBED IRRIGATION SHALL BE REPAIRED AS REQUIRED.

(91) ADJUST EXISTING SANITARY OR STORM MANHOLE TO FINISH GRADE BY REMOVING CONE SECTION AND ADDITNG FULL MANHOLE SECTION.

(92) EXTEND EXISTING SEWER LATERAL TO PROPOSED R/W LINE AND INSTALL CLEANOUT.

(93) PROTECT OR REMOVE EXISTING SEPTIC SYSTEM AND INSTALL NEW SEWER SERVICE TO PROPERTY AS DIRECTED BY ENGINEER.

FOR INFORMATIONAL PURPOSES ONLY

ALL PLAN DETAIL AND INFORMATION IS NOT SHOWN ON THIS 90% COMPLETED SET OF PLANS.

90% SUBMITTAL - JULY 2004

DESIGNED:	TSH
DRAWN:	NPR/RAF
CRP:	330222
HOR.	1" = 20'
VERT.	1" = 5'
DATE:	7/2004
DWG:	
SHEET	65 OF 99

CALL 48 HOURS BEFORE YOU DIG
1–800–553–4344
"It's the Law"
NORTHWEST UTILITIES NOTIFICATION CENTER

Harper Houf Peterson Righellis Inc.
ENGINEERS · PLANNERS · SURVEYORS
1104 MAIN STREET, SUITE 100, VANCOUVER, WA 98660
TEL 360.750.1131 www.hhpr.com FAX 360.750.1141

DESIGN & ENGINEERING DIVISION

NE 88TH STREET
STA 134+00 TO STA 138+00

proud past, promising future
CLARK COUNTY WASHINGTON

MATCHLINE STA 138+00 - SEE SHEET 65

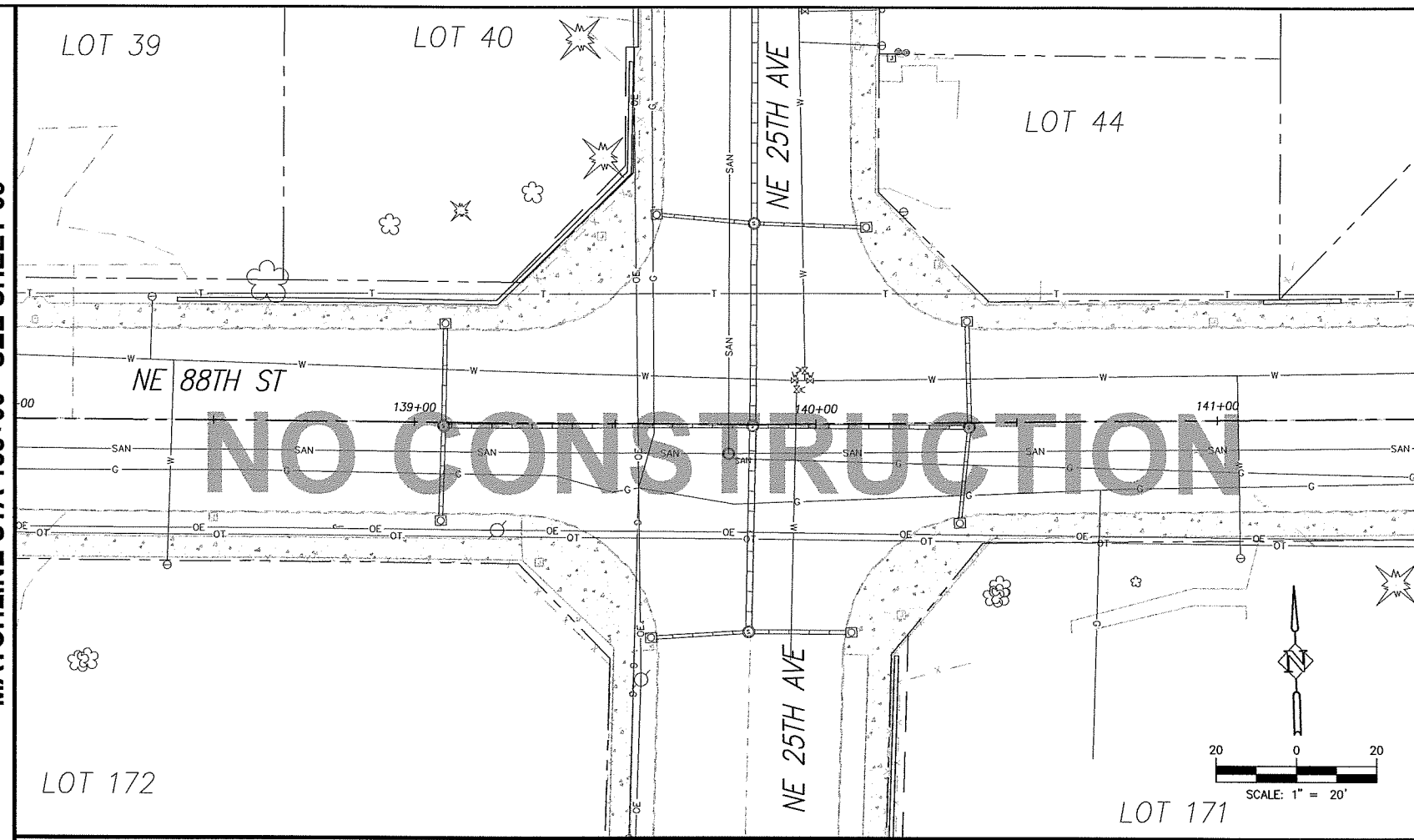

MATCHLINE STA 141+50 - SEE SHEET 67

MATCHLINE STA 138+00 - SEE SHEET 65

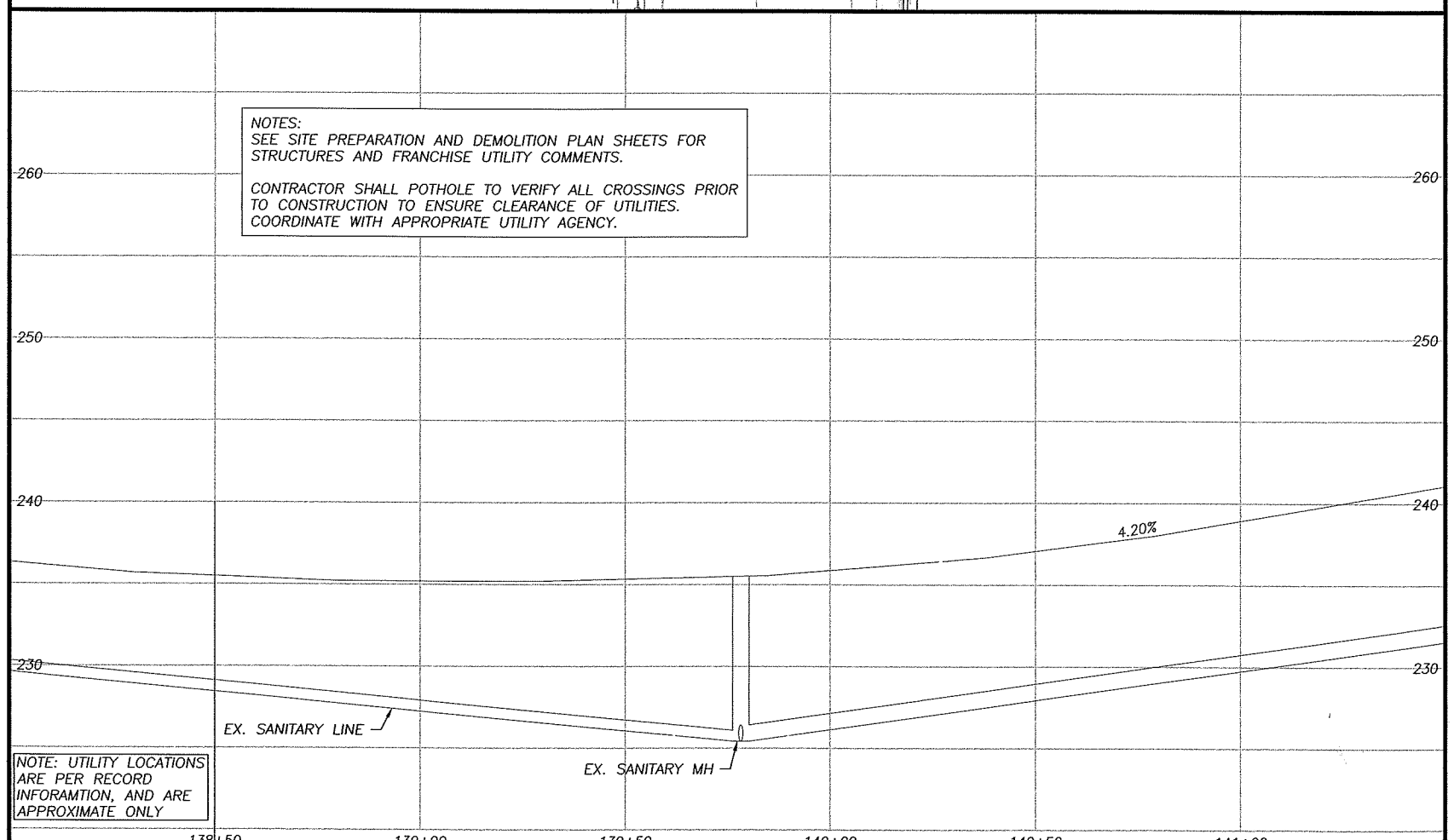

MATCHLINE STA 141+50 - SEE SHEET 67

P:\Crk-12 (NE 88th)\CRK12-DWGS\Crk12-RDWEST2.DWG

CONSTRUCTION NOTES:

(10) TELEPHONE RISERS AND/OR POLES TO BE REMOVED OR RELOCATED BY OTHERS, UNLESS OTHERWISE NOTED WITH (P) PROTECT. TELEPHONE CABLE TO BE ABANDONED. COORDINATE WORK WITH RON IMAI, US WEST, BY CALLING (360) 699-3546.

(19) LIMITS OF GRADING

(30) CONSTRUCT DRIVEWAY PER DETAIL AND "DRIVEWAY APPROACH SCHEDULE" TABLE ON SHEET 11.

(31) CONSTRUCT CONCRETE CURB AND GUTTER PER DETAIL SHEET 12.

(32) CONSTRUCT CONCRETE SIDEWALK PER DETAIL SHEET 14.

(33) CONSTRUCT CONCRETE CURB RAMP OF TYPE NOTED PER DETAIL SHEET 14.

(34) MATCH NEW CURB TO EXISTING CURB. CURB GRADES ARE BASED ON A 0.5' EXPOSURE. TRANSITION CURB EXPOSURE ON NEW CURB TO MATCH EXISTING CURB AT LEAST 3-FEET PRIOR TO MATCH POINT. IF NECESSARY, SAWCUT EXISTING CURB TO CREATE A CLEAN, UNDISTURBED EDGE.

(35) MATCH NEW SIDEWALK TO EXISTING SIDEWALK. TRANSITION NEW SIDEWALK WIDTH/LOCATION TO MATCH EXISTING WIDTH/LOCATION AT 5:1 PRIOR TO MATCH LINE. IF NECESSARY, SAWCUT EXISTING SIDEWALK TO CREATE A CLEAN, UNDISTURBED EDGE.

(36) CONSTRUCT 6'X6' A.C. LEVEL LANDING AND 6' TRANSITION RAMP FROM END OF SIDEWALK TO SHOULDER. 0.25' MIN CLASS 'A' A.C. OVER 0.4' CRUSHED ROCK.

(37) CONSTRUCT A.C. PAVEMENT RECONSTRUCTION/WIDENING. REFER TO TYPICAL SECTIONS ON SHEETS 8.

(38) CONSTRUCT A.C. OVERLAY. REFER TO TYPICAL SECTIONS ON SHEETS 8.

(39) RELOCATE (R), PROTECT (P), OR ADJUST (A) EXISTING TRAFFIC SIGNAL POLE, PER TRAFFIC SIGNAL PLANS, SHEETS 94 TO 99.

(40) CONSTRUCT EXTRUDED CURB PER CLARK COUNTY STD. DRAWING F18A.

(42) INSTALL FENCE AT LOCATIONS NOTED ON THE PLANS OR AS DIRECTED IN THE FIELD. SEE TYPICAL SECTION ON SHEET 12.

(43) INSTALL FENCE ON RETAINING WALL. SEE RETAINING WALL TABLES FOR DETAILS.

(44) CONSTRUCT RETAINING WALL PER PLAN AND PROFILE ON SHEET 42 TO 56. SEE TYPICAL DETAILS ON SHEETS 40 AND 41.

(54) CONSTRUCT STD. STORM MANHOLE, TYPE 1 WITH STANDARD MANHOLE RING AND COVER PER DETAIL SHEET 17.

(55) CONSTRUCT STD. OVERSIZED STORM MANHOLE, TYPE 2 WITH STANDARD MANHOLE RING AND COVER PER DETAIL SHEET 17.

(56) CONSTRUCT STD. FLAT TOP STORM MANHOLE, TYPE 3 WITH STANDARD MANHOLE RING AND COVER PER DETAIL SHEET 17

(57) CONSTRUCT PRIVATE CATCH BASIN PER DETAIL ON SHEET 19. INSTALL STORM PIPE AS SHOWN AND PER "STORM DRAINAGE DATA" INFORMATION TABLE THIS SHEET.

(58) CONSTRUCT TYPE 1 COMBINATION CURB INLET PER DETAIL ON SHEET 18. INSTALL STORM PIPE AS SHOWN AND PER "STORM DRAINAGE DATA" INFORMATION TABLE THIS SHEET.

(59) CONSTRUCT CATCH BASIN PER DETAIL ON SHEET 18.

(60) CONSTRUCT DITCH INLET PER DETAIL ON SHEET 19. INSTALL STORM PIPE AS SHOWN AND PER "STORM DRAINAGE DATA" INFORMATION TABLE THIS SHEET.

(61) INSTALL STORM PIPE.

(62) INSTALL TRENCH DRAIN AND STORM PIPE. SEE DETAILS ON SHEET 19.

(63) REMOVE EXISTING STORM SEWER PIPE AND/OR STRUCTURES. BACKFILL AND COMPACT VOID LEFT FROM EXISTING PIPE AS NECESSARY.

(64) EXISTING STORM PIPE AND/OR STRUCTURE TO REMAIN.

(65) PLUG AND ABANDON EXISTING STORM PIPE.

(66) ADJUST EXISTING MANHOLE CASTING WITH ADJUSTING RINGS/CATCH BASIN/VALVE BOX RIM TO FINISH GRADE.

(67) CONNECT TO EXISTING STORM PIPE OR STRUCTURE PER DETAIL ON SHEET 19.

(68) INSTALL STORM FILTER VAULT. SEE DETAIL SHEET 38.

(69) CONSTRUCT TYPE 1 CURB INLET PER DETAIL ON SHEET 18. INSTALL STORM PIPE AS SHOWN AND PER "STORM DRAINAGE DATA" INFORMATION TABLE THIS SHEET.

(73) CONSTRUCT ROADSIDE DITCH, GRADE TO DRAIN TO INLET.

(80) RELOCATE (R), PROTECT (P) ADJUST (A) EXISTING SANITARY SEWER CLEANOUT, WATER VALVE OR WATER METER BOX AND/OR SERVICE AS REQUIRED AND DIRECTED. ALL DISTURBED SERVICE LINES SHALL BE REPAIRED AS REQUIRED.

(81) EXISTING FIRE HYDRANT TO BE RELOCATED (R), PROTECTED (P), OR ADJUSTED (A). COORDINATE WITH CLARK PUBLIC UTILITIES.

(82) PROTECT EXISTING WATER LINE.

(90) RELOCATE (R), PROTECT (P), OR ADJUST (A) EXISTING IRRIGATION AS REQUIRED AND DIRECTED. ALL DISTURBED IRRIGATION SHALL BE REPAIRED AS REQUIRED.

(91) ADJUST EXISTING SANITARY OR STORM MANHOLE TO FINISH GRADE BY REMOVING CONE SECTION AND ADDITNG FULL MANHOLE SECTION.

(92) EXTEND EXISTING SEWER LATERAL TO PROPOSED R/W LINE AND INSTALL CLEANOUT.

(93) PROTECT OR REMOVE EXISTING SEPTIC SYSTEM AND INSTALL NEW SEWER SERVICE TO PROPERTY AS DIRECTED BY ENGINEER.

FOR INFORMATIONAL PURPOSES ONLY

ALL PLAN DETAIL AND INFORMATION IS NOT SHOWN ON THIS 90% COMPLETED SET OF PLANS.

90% SUBMITTAL - JULY 2004

DESIGNED:	TSH
DRAWN:	NPR/RAF
CRP:	330222
HOR.	1" = 20'
VERT.	1" = 5'
DATE:	7/2004
DWG:	
SHEET	66 OF 99

CALL 48 HOURS BEFORE YOU DIG
1-800-553-4344
"It's the Law"
NORTHWEST UTILITIES NOTIFICATION CENTER

Harper Houf Peterson Righellis Inc.
ENGINEERS • PLANNERS • SURVEYORS
1104 Main Street, Suite 100, Vancouver, WA 98660
TEL 360.750.1151 www.hhpr.com FAX 360.750.1141

DESIGN & ENGINEERING DIVISION

NE 88TH STREET
STA 138+00 TO STA 141+50

proud past, promising future
CLARK COUNTY WASHINGTON

MATCHLINE STA 141+50 - SEE SHEET 66

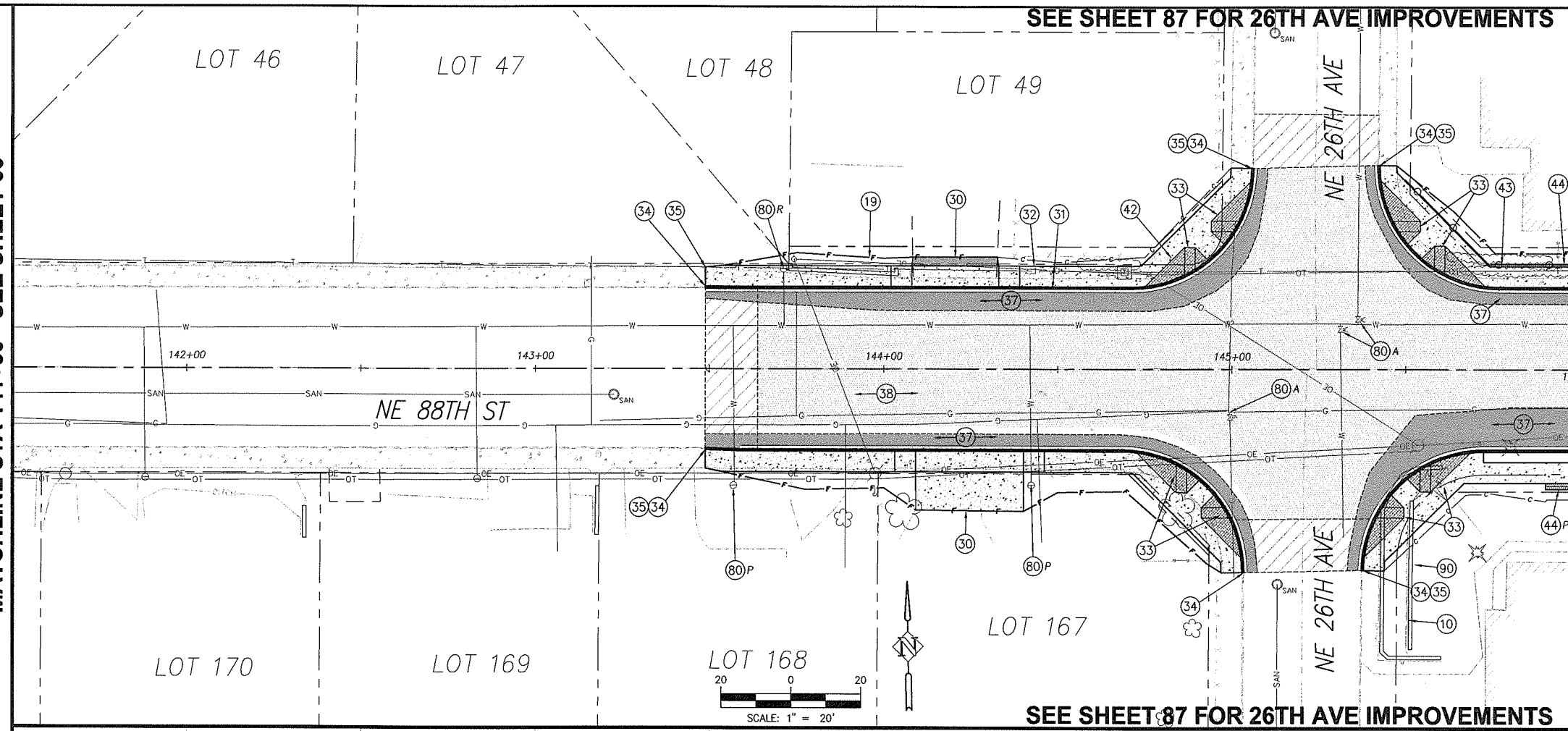

MATCHLINE STA 146+00 - SEE SHEET 68

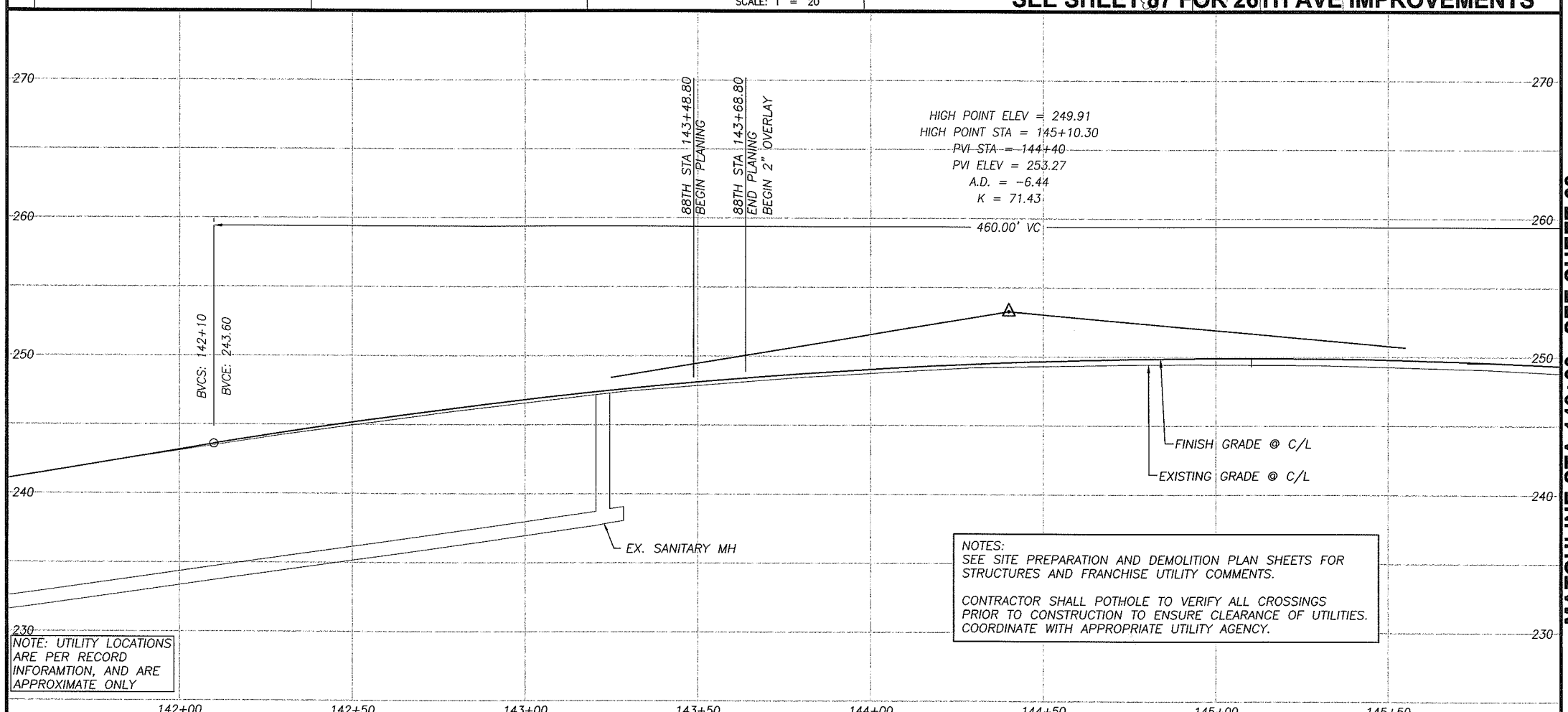

NOTES:
SEE SITE PREPARATION AND DEMOLITION PLAN SHEETS FOR STRUCTURES AND FRANCHISE UTILITY COMMENTS.

CONTRACTOR SHALL POTHOLE TO VERIFY ALL CROSSINGS PRIOR TO CONSTRUCTION TO ENSURE CLEARANCE OF UTILITIES. COORDINATE WITH APPROPRIATE UTILITY AGENCY.

NOTE: UTILITY LOCATIONS ARE PER RECORD INFORAMTION, AND ARE APPROXIMATE ONLY

CONSTRUCTION NOTES:

- (10) TELEPHONE RISERS AND/OR POLES TO BE REMOVED OR RELOCATED BY OTHERS, UNLESS OTHERWISE NOTED WITH (P) PROTECT. TELEPHONE CABLE TO BE ABANDONED. COORDINATE WORK WITH RON IMAI, US WEST, BY CALLING (360) 699-3546.
- (19) LIMITS OF GRADING
- (30) CONSTRUCT DRIVEWAY PER DETAIL AND "DRIVEWAY APPROACH SCHEDULE" TABLE ON SHEET 11.
- (31) CONSTRUCT CONCRETE CURB AND GUTTER PER DETAIL SHEET 12.
- (32) CONSTRUCT CONCRETE SIDEWALK PER DETAIL SHEET 14.
- (33) CONSTRUCT CONCRETE CURB RAMP OF TYPE NOTED PER DETAIL SHEET 14.
- (34) MATCH NEW CURB TO EXISTING CURB. CURB GRADES ARE BASED ON A 0.5' EXPOSURE. TRANSITION CURB EXPOSURE ON NEW CURB TO MATCH EXISTING CURB AT LEAST 3-FEET PRIOR TO MATCH POINT. IF NECESSARY, SAWCUT EXISTING CURB TO CREATE A CLEAN, UNDISTURBED EDGE.
- (35) MATCH NEW SIDEWALK TO EXISTING SIDEWALK. TRANSITION NEW SIDEWALK WIDTH/LOCATION TO MATCH EXISTING WIDTH/LOCATION AT 5:1 PRIOR TO MATCH LINE. IF NECESSARY, SAWCUT EXISTING SIDEWALK TO CREATE A CLEAN, UNDISTURBED EDGE.
- (36) CONSTRUCT 6'X6' A.C. LEVEL LANDING AND 6' TRANSITION RAMP FROM END OF SIDEWALK TO SHOULDER. 0.25' MIN CLASS 'A' A.C. OVER 0.4' CRUSHED ROCK.
- (37) CONSTRUCT A.C. PAVEMENT RECONSTRUCTION/WIDENING. REFER TO TYPICAL SECTIONS ON SHEETS 8.
- (38) CONSTRUCT A.C. OVERLAY. REFER TO TYPICAL SECTIONS ON SHEETS 8.
- (39) RELOCATE (R), PROTECT (P), OR ADJUST (A) EXISTING TRAFFIC SIGNAL POLE, PER TRAFFIC SIGNAL PLANS, SHEETS 94 TO 99.
- (40) CONSTRUCT EXTRUDED CURB PER CLARK COUNTY STD. DRAWING F18A.
- (42) INSTALL FENCE AT LOCATIONS NOTED ON THE PLANS OR AS DIRECTED IN THE FIELD. SEE TYPICAL SECTION ON SHEET 12.
- (43) INSTALL FENCE ON RETAINING WALL. SEE RETAINING WALL TABLES FOR DETAILS.
- (44) CONSTRUCT RETAINING WALL PER PLAN AND PROFILE ON SHEET 42 TO 56. SEE TYPICAL DETAILS ON SHEETS 40 AND 41.
- (54) CONSTRUCT STD. STORM MANHOLE, TYPE 1 WITH STANDARD MANHOLE RING AND COVER PER DETAIL SHEET 17.
- (55) CONSTRUCT STD. OVERSIZED STORM MANHOLE, TYPE 2 WITH STANDARD MANHOLE RING AND COVER PER DETAIL SHEET 17.
- (56) CONSTRUCT STD. FLAT TOP STORM MANHOLE, TYPE 3 WITH STANDARD MANHOLE RING AND COVER PER DETAIL SHEET 17
- (57) CONSTRUCT PRIVATE CATCH BASIN PER DETAIL ON SHEET 19. INSTALL STORM PIPE AS SHOWN AND PER "STORM DRAINAGE DATA" INFORMATION TABLE THIS SHEET.
- (58) CONSTRUCT TYPE 1 COMBINATION CURB INLET PER DETAIL ON SHEET 18. INSTALL STORM PIPE AS SHOWN AND PER "STORM DRAINAGE DATA" INFORMATION TABLE THIS SHEET.
- (59) CONSTRUCT CATCH BASIN PER DETAIL ON SHEET 18.
- (60) CONSTRUCT DITCH INLET PER DETAIL ON SHEET 19. INSTALL STORM PIPE AS SHOWN AND PER "STORM DRAINAGE DATA" INFORMATION TABLE THIS SHEET.
- (61) INSTALL STORM PIPE.
- (62) INSTALL TRENCH DRAIN AND STORM PIPE. SEE DETAILS ON SHEET 19.
- (63) REMOVE EXISTING STORM SEWER PIPE AND/OR STRUCTURES. BACKFILL AND COMPACT VOID LEFT FROM EXISTING PIPE AS NECESSARY.
- (64) EXISTING STORM PIPE AND/OR STRUCTURE TO REMAIN.
- (65) PLUG AND ABANDON EXISTING STORM PIPE.
- (66) ADJUST EXISTING MANHOLE CASTING WITH ADJUSTING RINGS/CATCH BASIN/VALVE BOX RIM TO FINISH GRADE.
- (67) CONNECT TO EXISTING STORM PIPE OR STRUCTURE PER DETAIL ON SHEET 19.
- (68) INSTALL STORM FILTER VAULT. SEE DETAIL SHEET 38.
- (69) CONSTRUCT TYPE 1 CURB INLET PER DETAIL ON SHEET 18. INSTALL STORM PIPE AS SHOWN AND PER "STORM DRAINAGE DATA" INFORMATION TABLE THIS SHEET.
- (73) CONSTRUCT ROADSIDE DITCH, GRADE TO DRAIN TO INLET.
- (80) RELOCATE (R), PROTECT (P) ADJUST (A) EXISTING SANITARY SEWER CLEANOUT, WATER VALVE OR WATER METER BOX AND/OR SERVICE AS REQUIRED AND DIRECTED. ALL DISTURBED SERVICE LINES SHALL BE REPAIRED AS REQUIRED.
- (81) EXISTING FIRE HYDRANT TO BE RELOCATED (R), PROTECTED (P), OR ADJUSTED (A). COORDINATE WITH CLARK PUBLIC UTILITIES.
- (82) PROTECT EXISTING WATER LINE.
- (90) RELOCATE (R), PROTECT (P), OR ADJUST (A) EXISTING IRRIGATION AS REQUIRED AND DIRECTED. ALL DISTURBED IRRIGATION SHALL BE REPAIRED AS REQUIRED.
- (91) ADJUST EXISTING SANITARY OR STORM MANHOLE TO FINISH GRADE BY REMOVING CONE SECTION AND ADDITNG FULL MANHOLE SECTION.
- (92) EXTEND EXISTING SEWER LATERAL TO PROPOSED R/W LINE AND INSTALL CLEANOUT.
- (93) PROTECT OR REMOVE EXISTING SEPTIC SYSTEM AND INSTALL NEW SEWER SERVICE TO PROPERTY AS DIRECTED BY ENGINEER.

FOR INFORMATIONAL PURPOSES ONLY

ALL PLAN DETAIL AND INFORMATION IS NOT SHOWN ON THIS 90% COMPLETED SET OF PLANS.

90% SUBMITTAL - JULY 2004

DESIGNED:	TSH
DRAWN:	NPR/RAF
CRP:	330222
HOR:	1" = 20'
VERT.	1" = 5'
DATE:	7/2004
DWG:	
SHEET	67 OF 99

CALL 48 HOURS BEFORE YOU DIG 1-800-553-4344 "It's the Law" NORTHWEST UTILITIES NOTIFICATION CENTER

Harper Houf Peterson Righellis Inc.
ENGINEERS · PLANNERS · SURVEYORS
1104 MAIN STREET, SUITE 100, VANCOUVER, WA 98660
TEL 360.750.1131 www.hhpr.com FAX 360.750.1141

DESIGN & ENGINEERING DIVISION

NE 88TH STREET
STA 141+50 TO STA 146+00

proud past, promising future

CLARK COUNTY WASHINGTON

P:\Clrk-12 (NE 88th)\CRK12-DWGS\ Crk12-RDEAST1.DWG

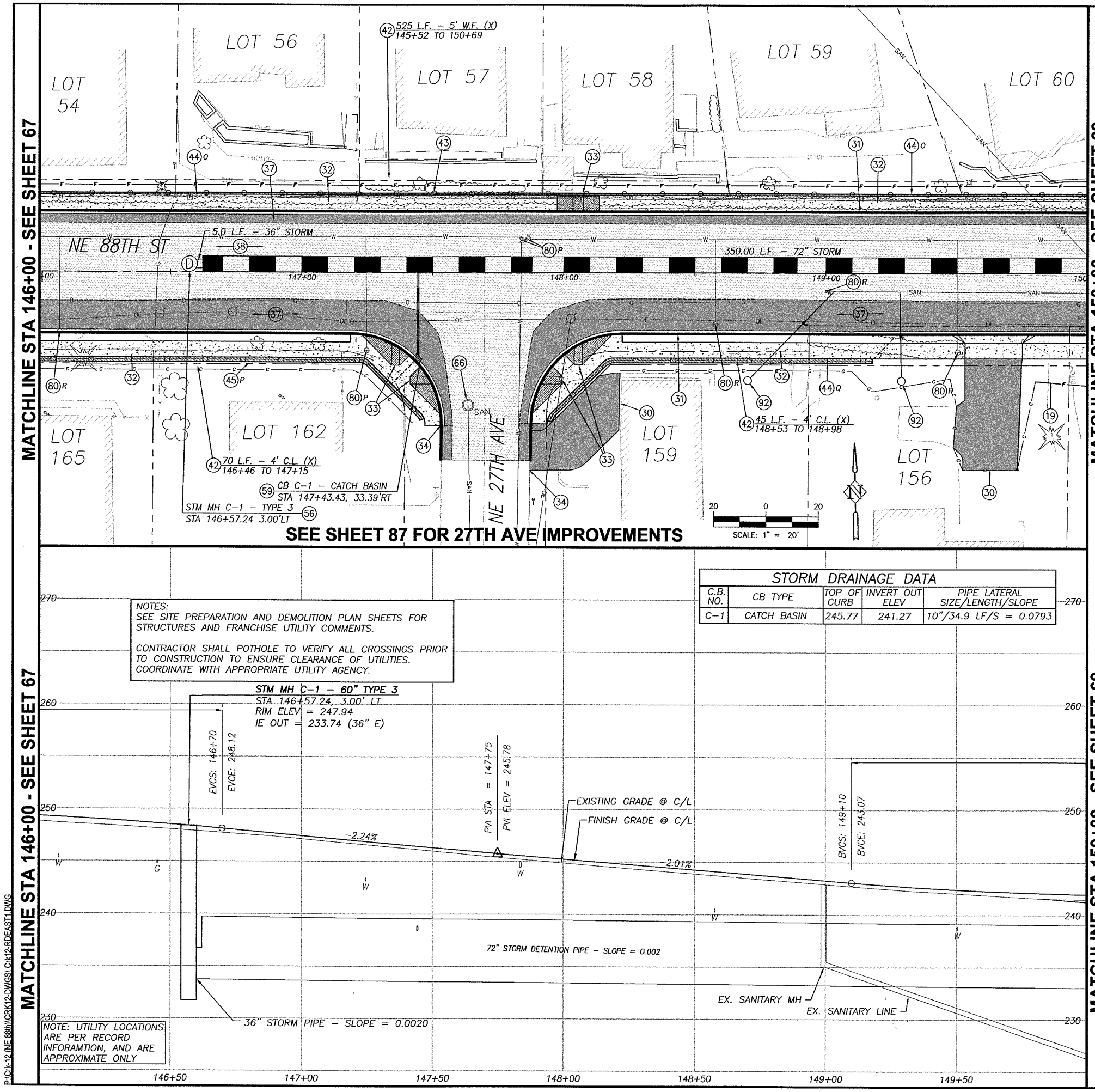

STORM DRAINAGE DATA				
C.B. NO.	CB TYPE	TOP OF CURB	INVERT OUT ELEV	PIPE LATERAL SIZE/LENGTH/SLOPE
C-1	CATCH BASIN	245.77	241.27	10"/34.9 LF/S = 0.0793

NOTES:
SEE SITE PREPARATION AND DEMOLITION PLAN SHEETS FOR STRUCTURES AND FRANCHISE UTILITY COMMENTS.

CONTRACTOR SHALL POTHOLE TO VERIFY ALL CROSSINGS PRIOR TO CONSTRUCTION TO ENSURE CLEARANCE OF UTILITIES. COORDINATE WITH APPROPRIATE UTILITY AGENCY.

P:\Crk:12 (NE 88th)\CRK12-DWG\SL Crk12-RDEAST1.DWG

CONSTRUCTION NOTES:

(10) TELEPHONE RISERS AND/OR POLES TO BE REMOVED OR RELOCATED BY OTHERS, UNLESS OTHERWISE NOTED WITH (P) PROTECT. TELEPHONE CABLE TO BE ABANDONED. COORDINATE WORK WITH RON IMAI, US WEST, BY CALLING (360) 699-3546.

(19) LIMITS OF GRADING

(30) CONSTRUCT DRIVEWAY PER DETAIL AND "DRIVEWAY APPROACH SCHEDULE" TABLE ON SHEET 11.

(31) CONSTRUCT CONCRETE CURB AND GUTTER PER DETAIL SHEET 12.

(32) CONSTRUCT CONCRETE SIDEWALK PER DETAIL SHEET 14.

(33) CONSTRUCT CONCRETE CURB RAMP OF TYPE NOTED PER DETAIL SHEET 14.

(34) MATCH NEW CURB TO EXISTING CURB. CURB GRADES ARE BASED ON A 0.5' EXPOSURE. TRANSITION CURB EXPOSURE ON NEW CURB TO MATCH EXISTING CURB AT LEAST 3-FEET PRIOR TO MATCH POINT. IF NECESSARY, SAWCUT EXISTING CURB TO CREATE A CLEAN, UNDISTURBED EDGE.

(35) MATCH NEW SIDEWALK TO EXISTING SIDEWALK. TRANSITION NEW SIDEWALK WIDTH/LOCATION TO MATCH EXISTING WIDTH/LOCATION AT 5:1 PRIOR TO MATCH LINE. IF NECESSARY, SAWCUT EXISTING SIDEWALK TO CREATE A CLEAN, UNDISTURBED EDGE.

(36) CONSTRUCT 6'X6' A.C. LEVEL LANDING AND 6' TRANSITION RAMP FROM END OF SIDEWALK TO SHOULDER. 0.25' MIN CLASS 'A' A.C. OVER 0.4' CRUSHED ROCK.

(37) CONSTRUCT A.C. PAVEMENT RECONSTRUCTION/WIDENING. REFER TO TYPICAL SECTIONS ON SHEETS 8.

(38) CONSTRUCT A.C. OVERLAY. REFER TO TYPICAL SECTIONS ON SHEETS 8.

(39) RELOCATE (R), PROTECT (P), OR ADJUST (A) EXISTING TRAFFIC SIGNAL POLE, PER TRAFFIC SIGNAL PLANS, SHEETS 94 TO 99.

(40) CONSTRUCT EXTRUDED CURB PER CLARK COUNTY STD. DRAWING F18A.

(42) INSTALL FENCE AT LOCATIONS NOTED ON THE PLANS OR AS DIRECTED IN THE FIELD. SEE TYPICAL SECTION ON SHEET 12.

(43) INSTALL FENCE ON RETAINING WALL. SEE RETAINING WALL TABLES FOR DETAILS.

(44) CONSTRUCT RETAINING WALL PER PLAN AND PROFILE ON SHEET 42 TO 56. SEE TYPICAL DETAILS ON SHEETS 40 AND 41.

(54) CONSTRUCT STD. STORM MANHOLE, TYPE 1 WITH STANDARD MANHOLE RING AND COVER PER DETAIL SHEET 17.

(55) CONSTRUCT STD. OVERSIZED STORM MANHOLE, TYPE 2 WITH STANDARD MANHOLE RING AND COVER PER DETAIL SHEET 17.

(56) CONSTRUCT STD. FLAT TOP STORM MANHOLE, TYPE 3 WITH STANDARD MANHOLE RING AND COVER PER DETAIL SHEET 17

(57) CONSTRUCT PRIVATE CATCH BASIN PER DETAIL ON SHEET 19. INSTALL STORM PIPE AS SHOWN AND PER "STORM DRAINAGE DATA" INFORMATION TABLE THIS SHEET.

(58) CONSTRUCT TYPE 1 COMBINATION CURB INLET PER DETAIL ON SHEET 18. INSTALL STORM PIPE AS SHOWN AND PER "STORM DRAINAGE DATA" INFORMATION TABLE THIS SHEET.

(59) CONSTRUCT CATCH BASIN PER DETAIL ON SHEET 18.

(60) CONSTRUCT DITCH INLET PER DETAIL ON SHEET 19. INSTALL STORM PIPE AS SHOWN AND PER "STORM DRAINAGE DATA" INFORMATION TABLE THIS SHEET.

(61) INSTALL STORM PIPE.

(62) INSTALL TRENCH DRAIN AND STORM PIPE. SEE DETAILS ON SHEET 19.

(63) REMOVE EXISTING STORM SEWER PIPE AND/OR STRUCTURES. BACKFILL AND COMPACT VOID LEFT FROM EXISTING PIPE AS NECESSARY.

(64) EXISTING STORM PIPE AND/OR STRUCTURE TO REMAIN.

(65) PLUG AND ABANDON EXISTING STORM PIPE.

(66) ADJUST EXISTING MANHOLE CASTING WITH ADJUSTING RINGS/CATCH BASIN/VALVE BOX RIM TO FINISH GRADE.

(67) CONNECT TO EXISTING STORM PIPE OR STRUCTURE PER DETAIL ON SHEET 19.

(68) INSTALL STORM FILTER VAULT. SEE DETAIL SHEET 38.

(69) CONSTRUCT TYPE 1 CURB INLET PER DETAIL ON SHEET 18. INSTALL STORM PIPE AS SHOWN AND PER "STORM DRAINAGE DATA" INFORMATION TABLE THIS SHEET.

(73) CONSTRUCT ROADSIDE DITCH, GRADE TO DRAIN TO INLET.

(80) RELOCATE (R), PROTECT (P) ADJUST (A) EXISTING SANITARY SEWER CLEANOUT, WATER VALVE OR WATER METER BOX AND/OR SERVICE AS REQUIRED AND DIRECTED. ALL DISTURBED SERVICE LINES SHALL BE REPAIRED AS REQUIRED.

(81) EXISTING FIRE HYDRANT TO BE RELOCATED (R), PROTECTED (P), OR ADJUSTED (A). COORDINATE WITH CLARK PUBLIC UTILITIES.

(82) PROTECT EXISTING WATER LINE.

(90) RELOCATE (R), PROTECT (P), OR ADJUST (A) EXISTING IRRIGATION AS REQUIRED AND DIRECTED. ALL DISTURBED IRRIGATION SHALL BE REPAIRED AS REQUIRED.

(91) ADJUST EXISTING SANITARY OR STORM MANHOLE TO FINISH GRADE BY REMOVING CONE SECTION AND ADDITNG FULL MANHOLE SECTION.

(92) EXTEND EXISTING SEWER LATERAL TO PROPOSED R/W LINE AND INSTALL CLEANOUT.

(93) PROTECT OR REMOVE EXISTING SEPTIC SYSTEM AND INSTALL NEW SEWER SERVICE TO PROPERTY AS DIRECTED BY ENGINEER.

FOR INFORMATIONAL PURPOSES ONLY

ALL PLAN DETAIL AND INFORMATION IS NOT SHOWN ON THIS 90% COMPLETED SET OF PLANS.

90% SUBMITTAL - JULY 2004

DESIGNED:	TSH
DRAWN:	NPR/RAF
CRP:	330222
HOR.	1" = 20'
VERT.	1" = 5'
DATE:	7/2004
DWG:	
SHEET	68 OF 99

CALL 48 HOURS BEFORE YOU DIG
1-800-553-4344
"It's the Law"
NORTHWEST UTILITIES NOTIFICATION CENTER

Harper Houf Peterson Righellis Inc.
ENGINEERS · PLANNERS · SURVEYORS
1104 MAIN STREET, SUITE 100, VANCOUVER, WA 98660
TEL: 360.750.1131 www.hhpr.com FAX 360.750.1141

DESIGN & ENGINEERING DIVISION

NE 88TH STREET
STA 146+00 TO STA 150+00

proud past, promising future
CLARK COUNTY WASHINGTON

MATCHLINE STA 150+00 - SEE SHEET 68

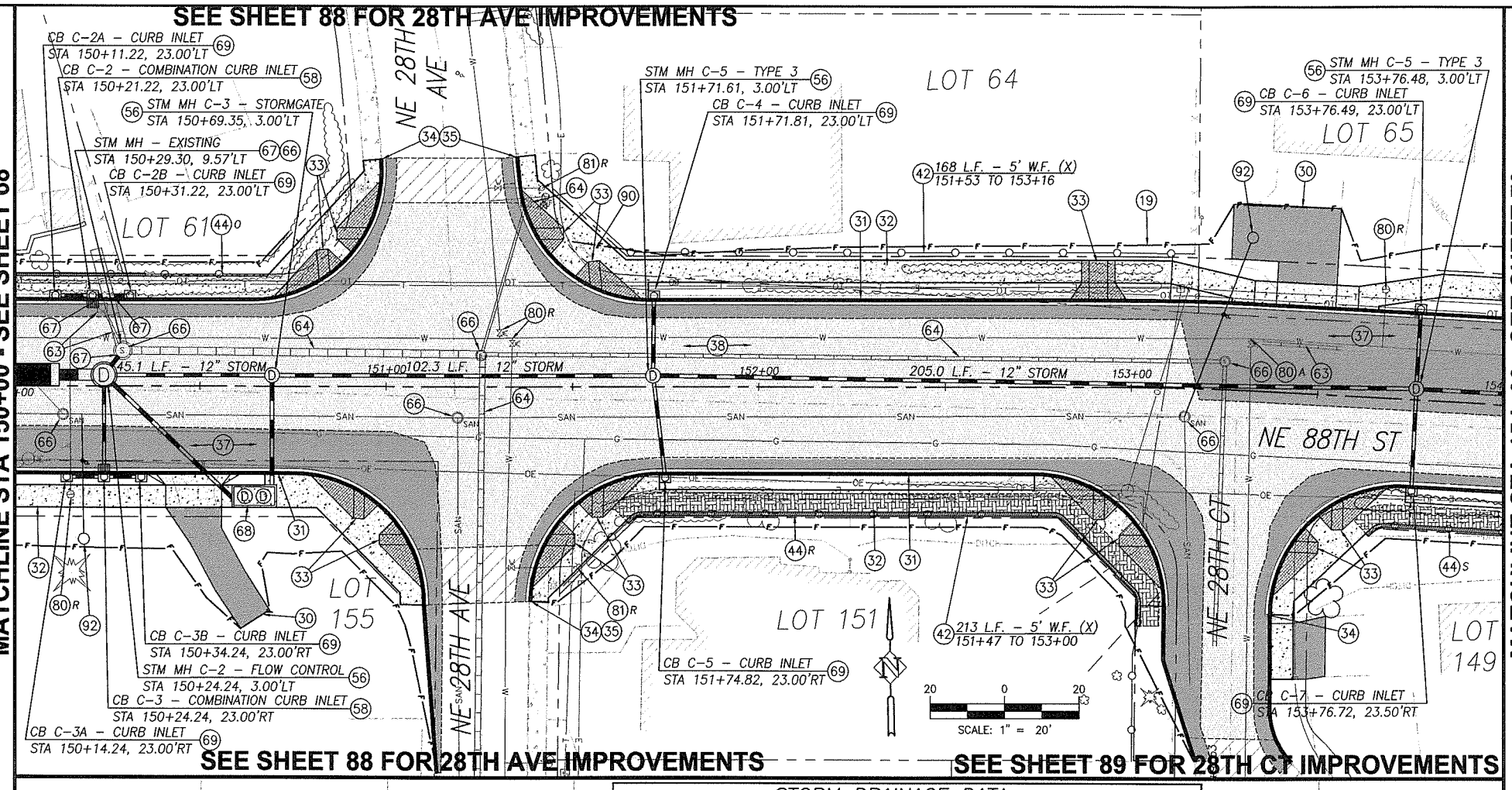

MATCHLINE STA 154+00 - SEE SHEET 70

NOTES:
SEE SITE PREPARATION AND DEMOLITION PLAN SHEETS FOR STRUCTURES AND FRANCHISE UTILITY COMMENTS.

CONTRACTOR SHALL POTHOLE TO VERIFY ALL CROSSINGS PRIOR TO CONSTRUCTION TO ENSURE CLEARANCE OF UTILITIES. COORDINATE WITH APPROPRIATE UTILITY AGENCY.

STORM DRAINAGE DATA

CB NO.	CB TYPE	TOP OF CURB	INVERT OUT ELEV	PIPE LATERAL SIZE/LENGTH/SLOPE
C-2	COMB. CURB INLET	241.96	239.23 IN/239.13 OUT	10"/16.8 LF/S = 0.0200
C-2A	CURB INLET	241.98	239.43	10"/10.0 LF/S = 0.0200
C-2B	CURB INLET	241.97	239.43	10"/10.0 LF/S = 0.0200
C-3	COMB. CURB INLET	241.96	237.63 IN/236.96 OUT	10"/27.3 LF/S = 0.0200
C-3A	CURB INLET	241.97	237.83	10"/XX.X LF/S = 0.0X00
C-3B	CURB INLET	241.97	237.83	10"/XX.X LF/S = 0.0X00
C-4	CURB INLET	243.87	239.54	10"/21.3 LF/S = 0.0200
C-5	CURB INLET	243.95	239.54	10"/27.5 LF/S = 0.0200
C-6	CURB INLET	250.65	247.19	10"/21.3 LF/S = 0.0200
C-7	CURB INLET	250.66	245.98	10"/27.3 LF/S = 0.0200

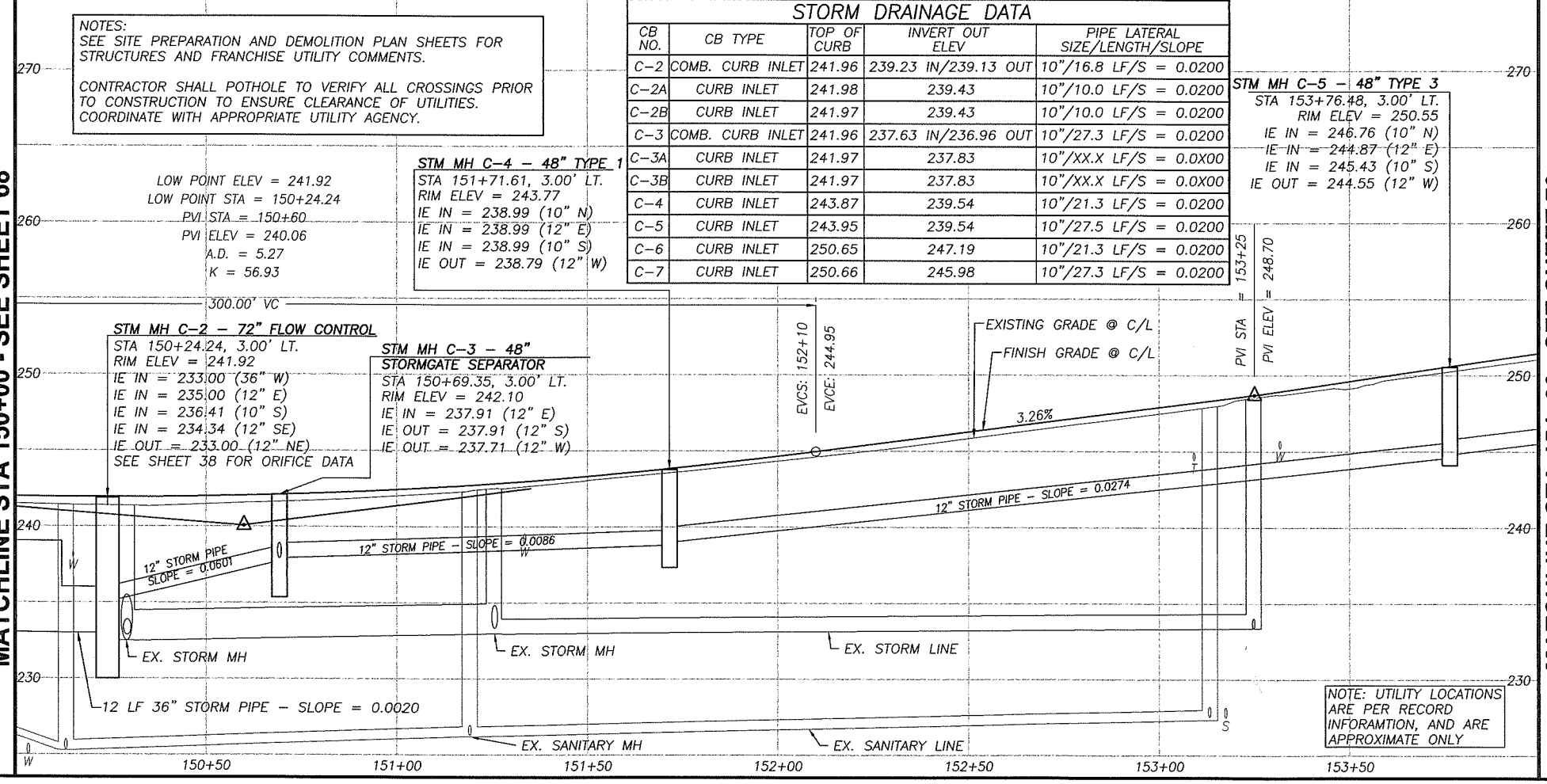

P:\Ckt-12 LNE 88th\ICRK12-DWGS\ Ckt12-RDEAST1.DWG

CONSTRUCTION NOTES:

(10) TELEPHONE RISERS AND/OR POLES TO BE REMOVED OR RELOCATED BY OTHERS, UNLESS OTHERWISE NOTED WITH (P) PROTECT. TELEPHONE CABLE TO BE ABANDONED. COORDINATE WORK WITH RON IMAI, US WEST, BY CALLING (360) 699-3546.

(19) LIMITS OF GRADING

(30) CONSTRUCT DRIVEWAY PER DETAIL AND "DRIVEWAY APPROACH SCHEDULE" TABLE ON SHEET 11.

(31) CONSTRUCT CONCRETE CURB AND GUTTER PER DETAIL SHEET 12.

(32) CONSTRUCT CONCRETE SIDEWALK PER DETAIL SHEET 14.

(33) CONSTRUCT CONCRETE CURB RAMP OF TYPE NOTED PER DETAIL SHEET 14.

(34) MATCH NEW CURB TO EXISTING CURB. CURB GRADES ARE BASED ON A 0.5' EXPOSURE. TRANSITION CURB EXPOSURE ON NEW CURB TO MATCH EXISTING CURB AT LEAST 3-FEET PRIOR TO MATCH POINT. IF NECESSARY, SAWCUT EXISTING CURB TO CREATE A CLEAN, UNDISTURBED EDGE.

(35) MATCH NEW SIDEWALK TO EXISTING SIDEWALK. TRANSITION NEW SIDEWALK WIDTH/LOCATION TO MATCH EXISTING WIDTH/LOCATION AT 5:1 PRIOR TO MATCH LINE. IF NECESSARY, SAWCUT EXISTING SIDEWALK TO CREATE A CLEAN, UNDISTURBED EDGE.

(36) CONSTRUCT 6'X6' A.C. LEVEL LANDING AND 6' TRANSITION RAMP FROM END OF SIDEWALK TO SHOULDER. 0.25' MIN CLASS 'A' A.C. OVER 0.4' CRUSHED ROCK.

(37) CONSTRUCT A.C. PAVEMENT RECONSTRUCTION/WIDENING. REFER TO TYPICAL SECTIONS ON SHEETS 8.

(38) CONSTRUCT A.C. OVERLAY. REFER TO TYPICAL SECTIONS ON SHEETS 8.

(39) RELOCATE (R), PROTECT (P), OR ADJUST (A) EXISTING TRAFFIC SIGNAL POLE, PER TRAFFIC SIGNAL PLANS, SHEETS 94 TO 99.

(40) CONSTRUCT EXTRUDED CURB PER CLARK COUNTY STD. DRAWING F18A.

(42) INSTALL FENCE AT LOCATIONS NOTED ON THE PLANS OR AS DIRECTED IN THE FIELD. SEE TYPICAL SECTION ON SHEET 12.

(43) INSTALL FENCE ON RETAINING WALL. SEE RETAINING WALL TABLES FOR DETAILS.

(44) CONSTRUCT RETAINING WALL PER PLAN AND PROFILE ON SHEET 42 TO 56. SEE TYPICAL DETAILS ON SHEETS 40 AND 41.

(54) CONSTRUCT STD. STORM MANHOLE, TYPE 1 WITH STANDARD MANHOLE RING AND COVER PER DETAIL SHEET 17.

(55) CONSTRUCT STD. OVERSIZED STORM MANHOLE, TYPE 2 WITH STANDARD MANHOLE RING AND COVER PER DETAIL SHEET 17.

(56) CONSTRUCT STD. FLAT TOP STORM MANHOLE, TYPE 3 WITH STANDARD MANHOLE RING AND COVER PER DETAIL SHEET 17

(57) CONSTRUCT PRIVATE CATCH BASIN PER DETAIL ON SHEET 19. INSTALL STORM PIPE AS SHOWN AND PER "STORM DRAINAGE DATA" INFORMATION TABLE THIS SHEET.

(58) CONSTRUCT TYPE 1 COMBINATION CURB INLET PER DETAIL ON SHEET 18. INSTALL STORM PIPE AS SHOWN AND PER "STORM DRAINAGE DATA" INFORMATION TABLE THIS SHEET.

(59) CONSTRUCT CATCH BASIN PER DETAIL ON SHEET 18.

(60) CONSTRUCT DITCH INLET PER DETAIL ON SHEET 19. INSTALL STORM PIPE AS SHOWN AND PER "STORM DRAINAGE DATA" INFORMATION TABLE THIS SHEET.

(61) INSTALL STORM PIPE.

(62) INSTALL TRENCH DRAIN AND STORM PIPE. SEE DETAILS ON SHEET 19.

(63) REMOVE EXISTING STORM SEWER PIPE AND/OR STRUCTURES. BACKFILL AND COMPACT VOID LEFT FROM EXISTING PIPE AS NECESSARY.

(64) EXISTING STORM PIPE AND/OR STRUCTURE TO REMAIN.

(65) PLUG AND ABANDON EXISTING STORM PIPE.

(66) ADJUST EXISTING MANHOLE CASTING WITH ADJUSTING RINGS/CATCH BASIN/VALVE BOX RIM TO FINISH GRADE.

(67) CONNECT TO EXISTING STORM PIPE OR STRUCTURE PER DETAIL ON SHEET 19.

(68) INSTALL STORM FILTER VAULT. SEE DETAIL SHEET 38.

(69) CONSTRUCT TYPE 1 CURB INLET PER DETAIL ON SHEET 18. INSTALL STORM PIPE AS SHOWN AND PER "STORM DRAINAGE DATA" INFORMATION TABLE THIS SHEET.

(73) CONSTRUCT ROADSIDE DITCH, GRADE TO DRAIN TO INLET.

(80) RELOCATE (R), PROTECT (P) ADJUST (A) EXISTING SANITARY SEWER CLEANOUT, WATER VALVE OR WATER METER BOX AND/OR SERVICE AS REQUIRED AND DIRECTED. ALL DISTURBED SERVICE LINES SHALL BE REPAIRED AS REQUIRED.

(81) EXISTING FIRE HYDRANT TO BE RELOCATED (R), PROTECTED (P), OR ADJUSTED (A). COORDINATE WITH CLARK PUBLIC UTILITIES.

(82) PROTECT EXISTING WATER LINE.

(90) RELOCATE (R), PROTECT (P), OR ADJUST (A) EXISTING IRRIGATION AS REQUIRED AND DIRECTED. ALL DISTURBED IRRIGATION SHALL BE REPAIRED AS REQUIRED.

(91) ADJUST EXISTING SANITARY OR STORM MANHOLE TO FINISH GRADE BY REMOVING CONE SECTION AND ADDITNG FULL MANHOLE SECTION.

(92) EXTEND EXISTING SEWER LATERAL TO PROPOSED R/W LINE AND INSTALL CLEANOUT.

(93) PROTECT OR REMOVE EXISTING SEPTIC SYSTEM AND INSTALL NEW SEWER SERVICE TO PROPERTY AS DIRECTED BY ENGINEER.

FOR INFORMATIONAL PURPOSES ONLY

ALL PLAN DETAIL AND INFORMATION IS NOT SHOWN ON THIS 90% COMPLETED SET OF PLANS.

90% SUBMITTAL - JULY 2004

DESIGNED:	TSH
DRAWN:	NPR/RAF
CRP:	330222
HOR.	1" = 20'
VERT.	1" = 5'
DATE:	7/2004
DWG:	
SHEET	69 OF 99

CALL 48 HOURS BEFORE YOU DIG
1-800-553-4344
"It's the Law"
NORTHWEST UTILITIES NOTIFICATION CENTER

Harper Houf Peterson Righellis Inc.
ENGINEERS · PLANNERS · SURVEYORS
1104 MAIN STREET, SUITE 100, VANCOUVER, WA 98660
TEL 360.750.1131 www.hhpr.com FAX 360.750.1141

DESIGN & ENGINEERING DIVISION

NE 88TH STREET
STA 150+00 TO STA 154+00

proud past, promising future

CLARK COUNTY WASHINGTON

MATCHLINE STA 154+00 - SEE SHEET 69

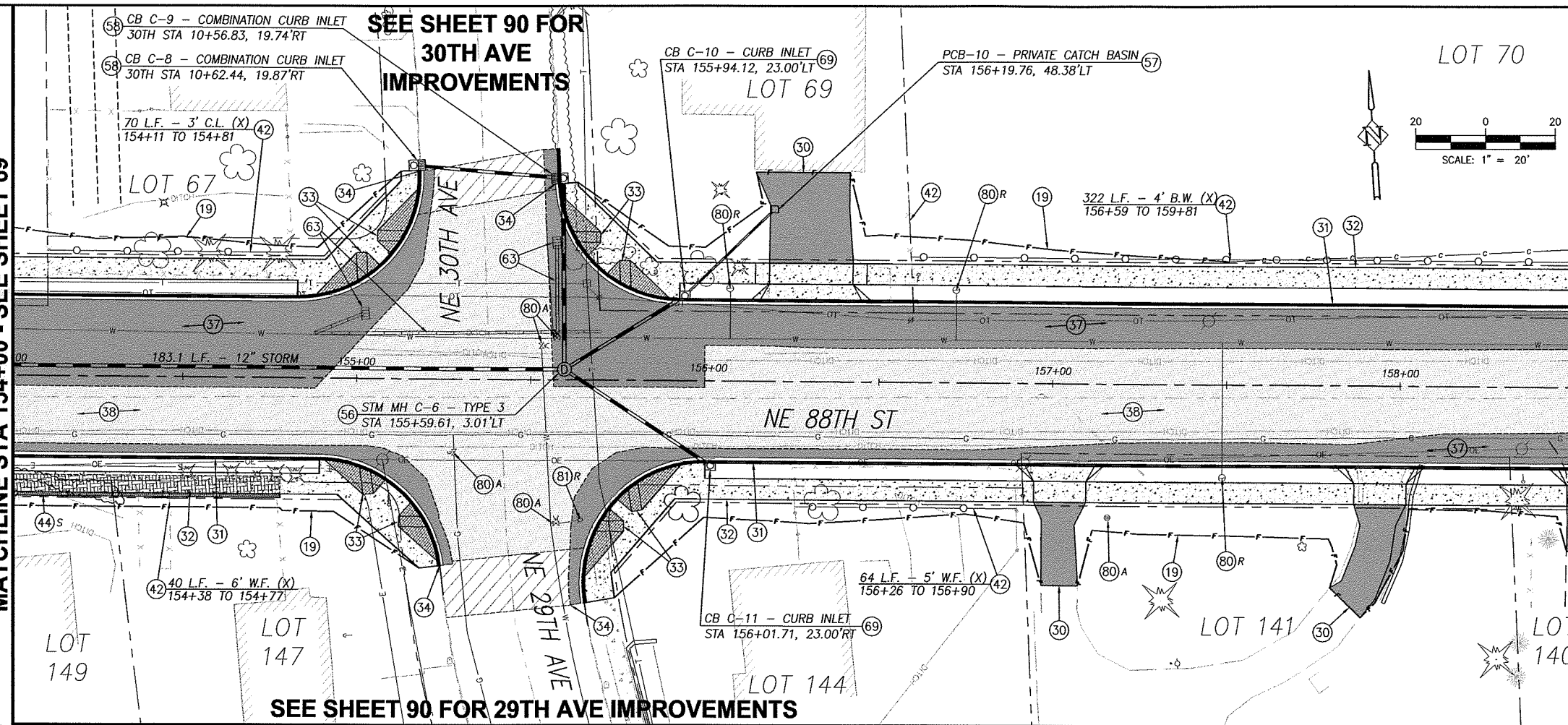

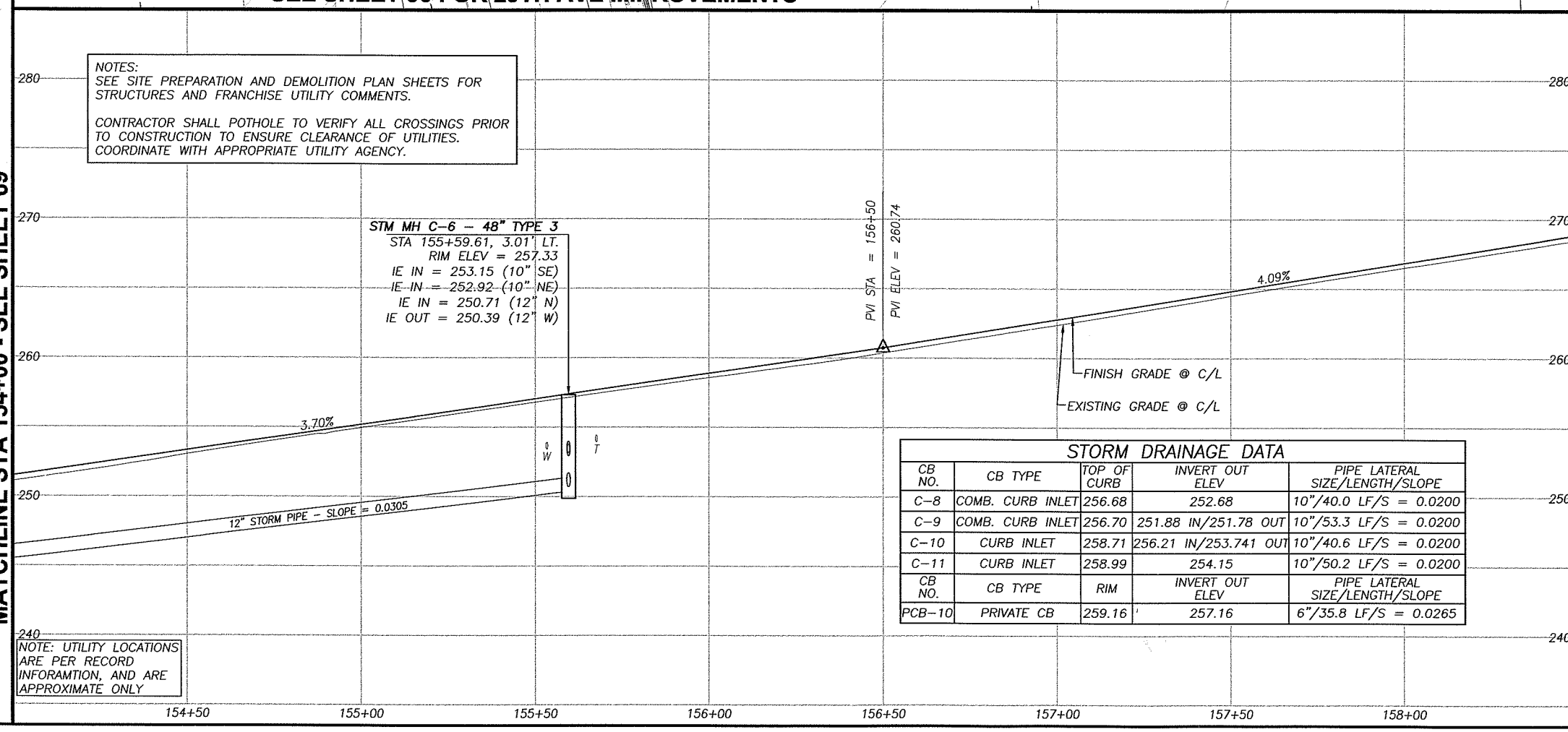

STORM DRAINAGE DATA

CB NO.	CB TYPE	TOP OF CURB	INVERT OUT ELEV	PIPE LATERAL SIZE/LENGTH/SLOPE
C-8	COMB. CURB INLET	256.68	252.68	10"/40.0 LF/S = 0.0200
C-9	COMB. CURB INLET	256.70	251.88 IN/251.78 OUT	10"/53.3 LF/S = 0.0200
C-10	CURB INLET	258.71	256.21 IN/253.741 OUT	10"/40.6 LF/S = 0.0200
C-11	CURB INLET	258.99	254.15	10"/50.2 LF/S = 0.0200
CB NO.	CB TYPE	RIM	INVERT OUT ELEV	PIPE LATERAL SIZE/LENGTH/SLOPE
PCB-10	PRIVATE CB	259.16	257.16	6"/35.8 LF/S = 0.0265

MATCHLINE STA 154+00 - SEE SHEET 69

P:\Clrk-12 NE 88th\ICRK12-DWGS\ Crk12-RDEAST1.DWG

MATCHLINE STA 158+50 - SEE SHEET 71

CONSTRUCTION NOTES:

(10) TELEPHONE RISERS AND/OR POLES TO BE REMOVED OR RELOCATED BY OTHERS, UNLESS OTHERWISE NOTED WITH (P) PROTECT. TELEPHONE CABLE TO BE ABANDONED. COORDINATE WORK WITH RON IMAI, US WEST, BY CALLING (360) 699-3546.

(19) LIMITS OF GRADING

(30) CONSTRUCT DRIVEWAY PER DETAIL AND "DRIVEWAY APPROACH SCHEDULE" TABLE ON SHEET 11.

(31) CONSTRUCT CONCRETE CURB AND GUTTER PER DETAIL SHEET 12.

(32) CONSTRUCT CONCRETE SIDEWALK PER DETAIL SHEET 14.

(33) CONSTRUCT CONCRETE CURB RAMP OF TYPE NOTED PER DETAIL SHEET 14.

(34) MATCH NEW CURB TO EXISTING CURB. CURB GRADES ARE BASED ON A 0.5' EXPOSURE. TRANSITION CURB EXPOSURE ON NEW CURB TO MATCH EXISTING CURB AT LEAST 3-FEET PRIOR TO MATCH POINT. IF NECESSARY, SAWCUT EXISTING CURB TO CREATE A CLEAN, UNDISTURBED EDGE.

(35) MATCH NEW SIDEWALK TO EXISTING SIDEWALK. TRANSITION NEW SIDEWALK WIDTH/LOCATION TO MATCH EXISTING WIDTH/LOCATION AT 5:1 PRIOR TO MATCH LINE. IF NECESSARY, SAWCUT EXISTING SIDEWALK TO CREATE A CLEAN, UNDISTURBED EDGE.

(36) CONSTRUCT 6'X6' A.C. LEVEL LANDING AND 6' TRANSITION RAMP FROM END OF SIDEWALK TO SHOULDER. 0.25' MIN CLASS 'A' A.C. OVER 0.4' CRUSHED ROCK.

(37) CONSTRUCT A.C. PAVEMENT RECONSTRUCTION/WIDENING. REFER TO TYPICAL SECTIONS ON SHEETS 8.

(38) CONSTRUCT A.C. OVERLAY. REFER TO TYPICAL SECTIONS ON SHEETS 8.

(39) RELOCATE (R), PROTECT (P), OR ADJUST (A) EXISTING TRAFFIC SIGNAL POLE, PER TRAFFIC SIGNAL PLANS, SHEETS 94 TO 99.

(40) CONSTRUCT EXTRUDED CURB PER CLARK COUNTY STD. DRAWING F18A.

(42) INSTALL FENCE AT LOCATIONS NOTED ON THE PLANS OR AS DIRECTED IN THE FIELD. SEE TYPICAL SECTION ON SHEET 12.

(43) INSTALL FENCE ON RETAINING WALL. SEE RETAINING WALL TABLES FOR DETAILS.

(44) CONSTRUCT RETAINING WALL PER PLAN AND PROFILE ON SHEET 42 TO 56. SEE TYPICAL DETAILS ON SHEETS 40 AND 41.

(54) CONSTRUCT STD. STORM MANHOLE, TYPE 1 WITH STANDARD MANHOLE RING AND COVER PER DETAIL SHEET 17.

(55) CONSTRUCT STD. OVERSIZED STORM MANHOLE, TYPE 2 WITH STANDARD MANHOLE RING AND COVER PER DETAIL SHEET 17.

(56) CONSTRUCT STD. FLAT TOP STORM MANHOLE, TYPE 3 WITH STANDARD MANHOLE RING AND COVER PER DETAIL SHEET 17

(57) CONSTRUCT PRIVATE CATCH BASIN PER DETAIL ON SHEET 19. INSTALL STORM PIPE AS SHOWN AND PER "STORM DRAINAGE DATA" INFORMATION TABLE THIS SHEET.

(58) CONSTRUCT TYPE 1 COMBINATION CURB INLET PER DETAIL ON SHEET 18. INSTALL STORM PIPE AS SHOWN AND PER "STORM DRAINAGE DATA" INFORMATION TABLE THIS SHEET.

(59) CONSTRUCT CATCH BASIN PER DETAIL ON SHEET 18.

(60) CONSTRUCT DITCH INLET PER DETAIL ON SHEET 19. INSTALL STORM PIPE AS SHOWN AND PER "STORM DRAINAGE DATA" INFORMATION TABLE THIS SHEET.

(61) INSTALL STORM PIPE.

(62) INSTALL TRENCH DRAIN AND STORM PIPE. SEE DETAILS ON SHEET 19.

(63) REMOVE EXISTING STORM SEWER PIPE AND/OR STRUCTURES. BACKFILL AND COMPACT VOID LEFT FROM EXISTING PIPE AS NECESSARY.

(64) EXISTING STORM PIPE AND/OR STRUCTURE TO REMAIN.

(65) PLUG AND ABANDON EXISTING STORM PIPE.

(66) ADJUST EXISTING MANHOLE CASTING WITH ADJUSTING RINGS/CATCH BASIN/VALVE BOX RIM TO FINISH GRADE.

(67) CONNECT TO EXISTING STORM PIPE OR STRUCTURE PER DETAIL ON SHEET 19.

(68) INSTALL STORM FILTER VAULT. SEE DETAIL SHEET 38.

(69) CONSTRUCT TYPE 1 CURB INLET PER DETAIL ON SHEET 18. INSTALL STORM PIPE AS SHOWN AND PER "STORM DRAINAGE DATA" INFORMATION TABLE THIS SHEET.

(73) CONSTRUCT ROADSIDE DITCH, GRADE TO DRAIN TO INLET.

(80) RELOCATE (R), PROTECT (P) ADJUST (A) EXISTING SANITARY SEWER CLEANOUT, WATER VALVE OR WATER METER BOX AND/OR SERVICE AS REQUIRED AND DIRECTED. ALL DISTURBED SERVICE LINES SHALL BE REPAIRED AS REQUIRED.

(81) EXISTING FIRE HYDRANT TO BE RELOCATED (R), PROTECTED (P), OR ADJUSTED (A). COORDINATE WITH CLARK PUBLIC UTILITIES.

(82) PROTECT EXISTING WATER LINE.

(90) RELOCATE (R), PROTECT (P), OR ADJUST (A) EXISTING IRRIGATION AS REQUIRED AND DIRECTED. ALL DISTURBED IRRIGATION SHALL BE REPAIRED AS REQUIRED.

(91) ADJUST EXISTING SANITARY OR STORM MANHOLE TO FINISH GRADE BY REMOVING CONE SECTION AND ADDITNG FULL MANHOLE SECTION.

(92) EXTEND EXISTING SEWER LATERAL TO PROPOSED R/W LINE AND INSTALL CLEANOUT.

(93) PROTECT OR REMOVE EXISTING SEPTIC SYSTEM AND INSTALL NEW SEWER SERVICE TO PROPERTY AS DIRECTED BY ENGINEER.

FOR INFORMATIONAL PURPOSES ONLY

ALL PLAN DETAIL AND INFORMATION IS NOT SHOWN ON THIS 90% COMPLETED SET OF PLANS.

90% SUBMITTAL - JULY 2004

DESIGNED:	TSH
DRAWN:	NPR/RAF
CRP:	330222
HOR.	1" = 20'
VERT.	1" = 5'
DATE:	7/2004
DWG:	
SHEET	70 OF 99

CALL 48 HOURS BEFORE YOU DIG 1-800-553-4344 "It's the Law" NORTHWEST UTILITIES NOTIFICATION CENTER

Harper Houf Peterson Righellis Inc.
ENGINEERS • PLANNERS • SURVEYORS
1104 MAIN STREET, SUITE 100, VANCOUVER, WA 98660
TEL 360.750.1131 www.hhpr.com FAX 360.750.1141

DESIGN & ENGINEERING DIVISION

NE 88TH STREET
STA 154+00 TO STA 158+50

proud past, promising future

CLARK COUNTY WASHINGTON

MATCHLINE STA 158+50 - SEE SHEET 70

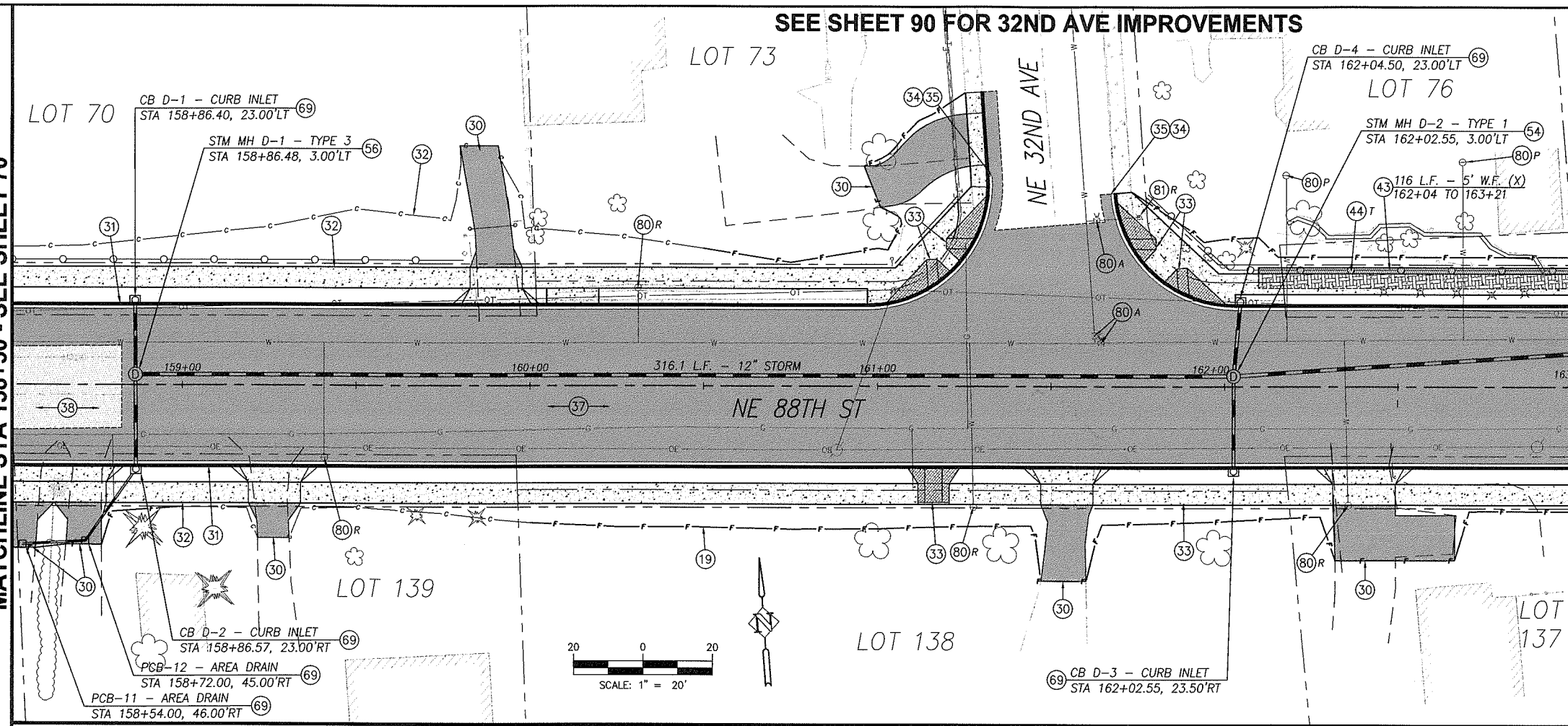

MATCHLINE STA 163+00 - SEE SHEET 72

MATCHLINE STA 158+50 - SEE SHEET 70

NOTES:
SEE SITE PREPARATION AND DEMOLITION PLAN SHEETS FOR STRUCTURES AND FRANCHISE UTILITY COMMENTS.

CONTRACTOR SHALL POTHOLE TO VERIFY ALL CROSSINGS PRIOR TO CONSTRUCTION TO ENSURE CLEARANCE OF UTILITIES. COORDINATE WITH APPROPRIATE UTILITY AGENCY.

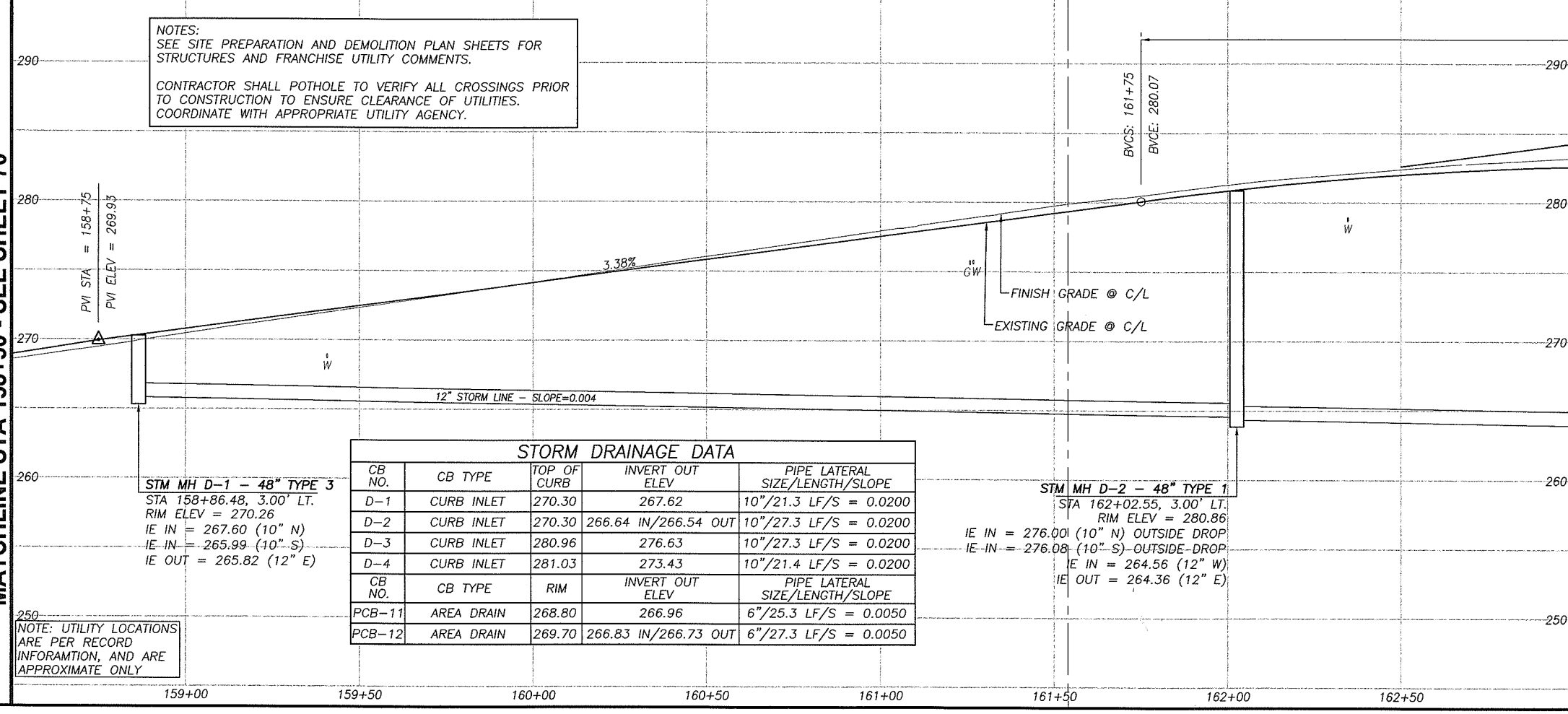

NOTE: UTILITY LOCATIONS ARE PER RECORD INFORAMTION, AND ARE APPROXIMATE ONLY

STORM DRAINAGE DATA

CB NO.	CB TYPE	TOP OF CURB	INVERT OUT ELEV	PIPE LATERAL SIZE/LENGTH/SLOPE
D-1	CURB INLET	270.30	267.62	10"/21.3 LF/S = 0.0200
D-2	CURB INLET	270.30	266.64 IN/266.54 OUT	10"/27.3 LF/S = 0.0200
D-3	CURB INLET	280.96	276.63	10"/27.3 LF/S = 0.0200
D-4	CURB INLET	281.03	273.43	10"/21.4 LF/S = 0.0200
CB NO.	CB TYPE	RIM	INVERT OUT ELEV	PIPE LATERAL SIZE/LENGTH/SLOPE
PCB-11	AREA DRAIN	268.80	266.96	6"/25.3 LF/S = 0.0050
PCB-12	AREA DRAIN	269.70	266.83 IN/266.73 OUT	6"/27.3 LF/S = 0.0050

P:\Crk-12 (NE 88th)\CRK12-DWGS\Crk12-RDEAST1.DWG

CONSTRUCTION NOTES:

(10) TELEPHONE RISERS AND/OR POLES TO BE REMOVED OR RELOCATED BY OTHERS, UNLESS OTHERWISE NOTED WITH (P) PROTECT. TELEPHONE CABLE TO BE ABANDONED. COORDINATE WORK WITH RON IMAI, US WEST, BY CALLING (360) 699-3546.

(19) LIMITS OF GRADING

(30) CONSTRUCT DRIVEWAY PER DETAIL AND "DRIVEWAY APPROACH SCHEDULE" TABLE ON SHEET 11.

(31) CONSTRUCT CONCRETE CURB AND GUTTER PER DETAIL SHEET 12.

(32) CONSTRUCT CONCRETE SIDEWALK PER DETAIL SHEET 14.

(33) CONSTRUCT CONCRETE CURB RAMP OF TYPE NOTED PER DETAIL SHEET 14.

(34) MATCH NEW CURB TO EXISTING CURB. CURB GRADES ARE BASED ON A 0.5' EXPOSURE. TRANSITION CURB EXPOSURE ON NEW CURB TO MATCH EXISTING CURB AT LEAST 3-FEET PRIOR TO MATCH POINT. IF NECESSARY, SAWCUT EXISTING CURB TO CREATE A CLEAN, UNDISTURBED EDGE.

(35) MATCH NEW SIDEWALK TO EXISTING SIDEWALK. TRANSITION NEW SIDEWALK WIDTH/LOCATION TO MATCH EXISTING WIDTH/LOCATION AT 5:1 PRIOR TO MATCH LINE. IF NECESSARY, SAWCUT EXISTING SIDEWALK TO CREATE A CLEAN, UNDISTURBED EDGE.

(36) CONSTRUCT 6'X6' A.C. LEVEL LANDING AND 6' TRANSITION RAMP FROM END OF SIDEWALK TO SHOULDER. 0.25' MIN CLASS 'A' A.C. OVER 0.4' CRUSHED ROCK.

(37) CONSTRUCT A.C. PAVEMENT RECONSTRUCTION/WIDENING. REFER TO TYPICAL SECTIONS ON SHEETS 8.

(38) CONSTRUCT A.C. OVERLAY. REFER TO TYPICAL SECTIONS ON SHEETS 8.

(39) RELOCATE (R), PROTECT (P), OR ADJUST (A) EXISTING TRAFFIC SIGNAL POLE, PER TRAFFIC SIGNAL PLANS, SHEETS 94 TO 99.

(40) CONSTRUCT EXTRUDED CURB PER CLARK COUNTY STD. DRAWING F18A.

(42) INSTALL FENCE AT LOCATIONS NOTED ON THE PLANS OR AS DIRECTED IN THE FIELD. SEE TYPICAL SECTION ON SHEET 12.

(43) INSTALL FENCE ON RETAINING WALL. SEE RETAINING WALL TABLES FOR DETAILS.

(44) CONSTRUCT RETAINING WALL PER PLAN AND PROFILE ON SHEET 42 TO 56. SEE TYPICAL DETAILS ON SHEETS 40 AND 41.

(54) CONSTRUCT STD. STORM MANHOLE, TYPE 1 WITH STANDARD MANHOLE RING AND COVER PER DETAIL SHEET 17.

(55) CONSTRUCT STD. OVERSIZED STORM MANHOLE, TYPE 2 WITH STANDARD MANHOLE RING AND COVER PER DETAIL SHEET 17.

(56) CONSTRUCT STD. FLAT TOP STORM MANHOLE, TYPE 3 WITH STANDARD MANHOLE RING AND COVER PER DETAIL SHEET 17

(57) CONSTRUCT PRIVATE CATCH BASIN PER DETAIL ON SHEET 19. INSTALL STORM PIPE AS SHOWN AND PER "STORM DRAINAGE DATA" INFORMATION TABLE THIS SHEET.

(58) CONSTRUCT TYPE 1 COMBINATION CURB INLET PER DETAIL ON SHEET 18. INSTALL STORM PIPE AS SHOWN AND PER "STORM DRAINAGE DATA" INFORMATION TABLE THIS SHEET.

(59) CONSTRUCT CATCH BASIN PER DETAIL ON SHEET 18.

(60) CONSTRUCT DITCH INLET PER DETAIL ON SHEET 19. INSTALL STORM PIPE AS SHOWN AND PER "STORM DRAINAGE DATA" INFORMATION TABLE THIS SHEET.

(61) INSTALL STORM PIPE.

(62) INSTALL TRENCH DRAIN AND STORM PIPE. SEE DETAILS ON SHEET 19.

(63) REMOVE EXISTING STORM SEWER PIPE AND/OR STRUCTURES. BACKFILL AND COMPACT VOID LEFT FROM EXISTING PIPE AS NECESSARY.

(64) EXISTING STORM PIPE AND/OR STRUCTURE TO REMAIN.

(65) PLUG AND ABANDON EXISTING STORM PIPE.

(66) ADJUST EXISTING MANHOLE CASTING WITH ADJUSTING RINGS/CATCH BASIN/VALVE BOX RIM TO FINISH GRADE.

(67) CONNECT TO EXISTING STORM PIPE OR STRUCTURE PER DETAIL ON SHEET 19.

(68) INSTALL STORM FILTER VAULT. SEE DETAIL SHEET 38.

(69) CONSTRUCT TYPE 1 CURB INLET PER DETAIL ON SHEET 18. INSTALL STORM PIPE AS SHOWN AND PER "STORM DRAINAGE DATA" INFORMATION TABLE THIS SHEET.

(73) CONSTRUCT ROADSIDE DITCH, GRADE TO DRAIN TO INLET.

(80) RELOCATE (R), PROTECT (P) ADJUST (A) EXISTING SANITARY SEWER CLEANOUT, WATER VALVE OR WATER METER BOX AND/OR SERVICE AS REQUIRED AND DIRECTED. ALL DISTURBED SERVICE LINES SHALL BE REPAIRED AS REQUIRED.

(81) EXISTING FIRE HYDRANT TO BE RELOCATED (R), PROTECTED (P), OR ADJUSTED (A). COORDINATE WITH CLARK PUBLIC UTILITIES.

(82) PROTECT EXISTING WATER LINE.

(90) RELOCATE (R), PROTECT (P), OR ADJUST (A) EXISTING IRRIGATION AS REQUIRED AND DIRECTED. ALL DISTURBED IRRIGATION SHALL BE REPAIRED AS REQUIRED.

(91) ADJUST EXISTING SANITARY OR STORM MANHOLE TO FINISH GRADE BY REMOVING CONE SECTION AND ADDITNG FULL MANHOLE SECTION.

(92) EXTEND EXISTING SEWER LATERAL TO PROPOSED R/W LINE AND INSTALL CLEANOUT.

(93) PROTECT OR REMOVE EXISTING SEPTIC SYSTEM AND INSTALL NEW SEWER SERVICE TO PROPERTY AS DIRECTED BY ENGINEER.

FOR INFORMATIONAL PURPOSES ONLY

ALL PLAN DETAIL AND INFORMATION IS NOT SHOWN ON THIS 90% COMPLETED SET OF PLANS.

90% SUBMITTAL - JULY 2004

DESIGNED:	TSH
DRAWN:	NPR/RAF
CRP:	330222
HOR.	1" = 20'
VERT.	1" = 5'
DATE:	7/2004
DWG:	SHEET 71 OF 99

CALL 48 HOURS BEFORE YOU DIG 1-800-553-4344 "It's the Law" NORTHWEST UTILITIES NOTIFICATION CENTER

Harper Houf Peterson Righellis Inc.
ENGINEERS · PLANNERS · SURVEYORS
1104 MAIN STREET, SUITE 100, VANCOUVER, WA 98660
TEL 360.750.1131 www.hhpr.com FAX 360.750.1141

DESIGN & ENGINEERING DIVISION

NE 88TH STREET
STA 158+50 TO STA 163+00

proud past, promising future

CLARK COUNTY WASHINGTON

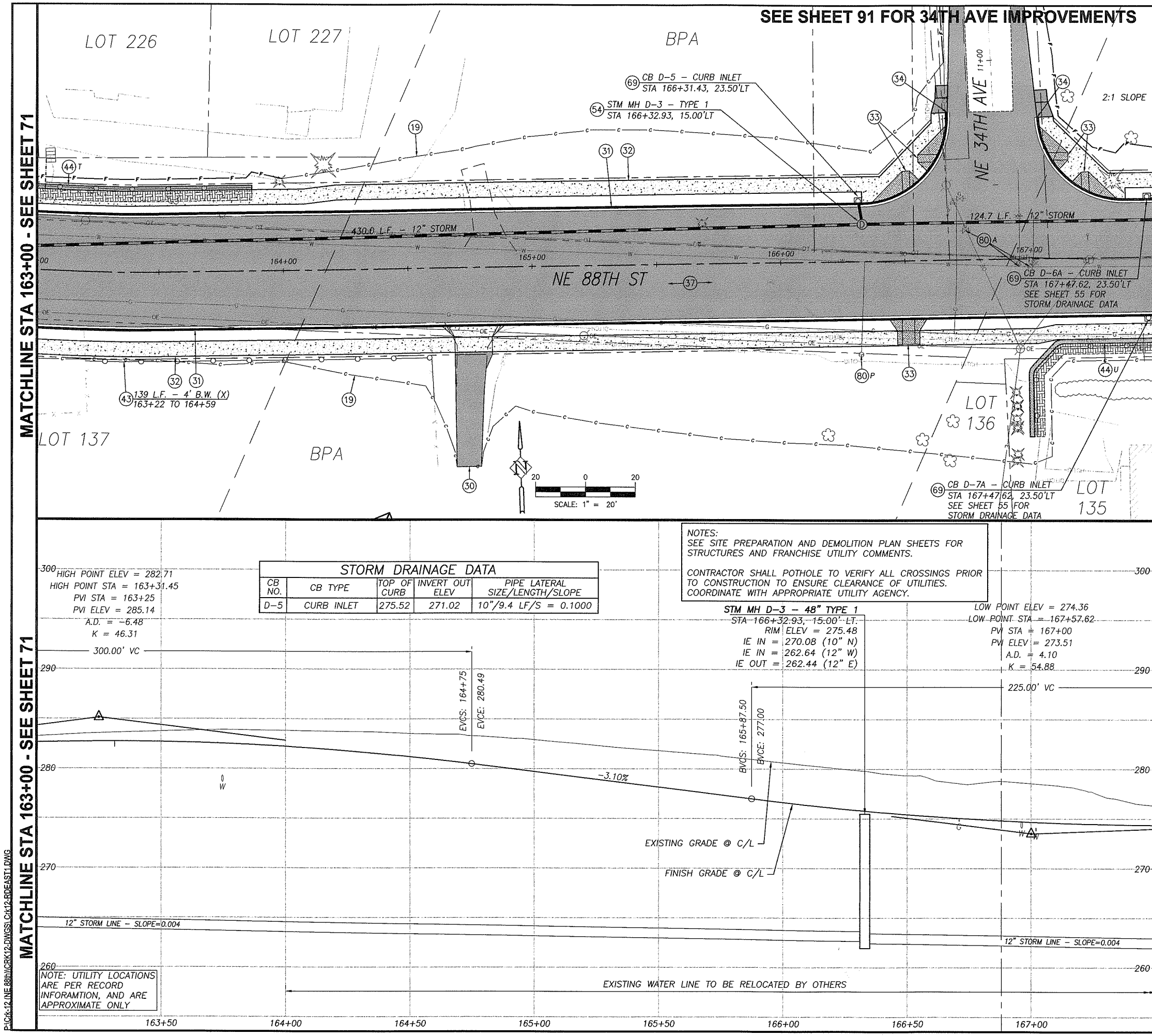

STORM DRAINAGE DATA				
CB NO.	CB TYPE	TOP OF CURB	INVERT OUT ELEV	PIPE LATERAL SIZE/LENGTH/SLOPE
D-5	CURB INLET	275.52	271.02	10"/9.4 LF/S = 0.1000

CONSTRUCTION NOTES:

10. TELEPHONE RISERS AND/OR POLES TO BE REMOVED OR RELOCATED BY OTHERS, UNLESS OTHERWISE NOTED WITH (P) PROTECT. TELEPHONE CABLE TO BE ABANDONED. COORDINATE WORK WITH RON IMAI, US WEST, BY CALLING (360) 699-3546.
19. LIMITS OF GRADING
30. CONSTRUCT DRIVEWAY PER DETAIL AND "DRIVEWAY APPROACH SCHEDULE" TABLE ON SHEET 11.
31. CONSTRUCT CONCRETE CURB AND GUTTER PER DETAIL SHEET 12.
32. CONSTRUCT CONCRETE SIDEWALK PER DETAIL SHEET 14.
33. CONSTRUCT CONCRETE CURB RAMP OF TYPE NOTED PER DETAIL SHEET 14.
34. MATCH NEW CURB TO EXISTING CURB. CURB GRADES ARE BASED ON A 0.5' EXPOSURE. TRANSITION CURB EXPOSURE ON NEW CURB TO MATCH EXISTING CURB AT LEAST 3-FEET PRIOR TO MATCH POINT. IF NECESSARY, SAWCUT EXISTING CURB TO CREATE A CLEAN, UNDISTURBED EDGE.
35. MATCH NEW SIDEWALK TO EXISTING SIDEWALK. TRANSITION NEW SIDEWALK WIDTH/LOCATION TO MATCH EXISTING WIDTH/LOCATION AT 5:1 PRIOR TO MATCH LINE. IF NECESSARY, SAWCUT EXISTING SIDEWALK TO CREATE A CLEAN, UNDISTURBED EDGE.
36. CONSTRUCT 6'X6' A.C. LEVEL LANDING AND 6' TRANSITION RAMP FROM END OF SIDEWALK TO SHOULDER. 0.25' MIN CLASS 'A' A.C. OVER 0.4' CRUSHED ROCK.
37. CONSTRUCT A.C. PAVEMENT RECONSTRUCTION/WIDENING. REFER TO TYPICAL SECTIONS ON SHEETS 8.
38. CONSTRUCT A.C. OVERLAY. REFER TO TYPICAL SECTIONS ON SHEETS 8.
39. RELOCATE (R), PROTECT (P), OR ADJUST (A) EXISTING TRAFFIC SIGNAL POLE, PER TRAFFIC SIGNAL PLANS, SHEETS 94 TO 99.
40. CONSTRUCT EXTRUDED CURB PER CLARK COUNTY STD. DRAWING F18A.
42. INSTALL FENCE AT LOCATIONS NOTED ON THE PLANS OR AS DIRECTED IN THE FIELD. SEE TYPICAL SECTION ON SHEET 12.
43. INSTALL FENCE ON RETAINING WALL. SEE RETAINING WALL TABLES FOR DETAILS.
44. CONSTRUCT RETAINING WALL PER PLAN AND PROFILE ON SHEET 42 TO 56. SEE TYPICAL DETAILS ON SHEETS 40 AND 41.
54. CONSTRUCT STD. STORM MANHOLE, TYPE 1 WITH STANDARD MANHOLE RING AND COVER PER DETAIL SHEET 17.
55. CONSTRUCT STD. OVERSIZED STORM MANHOLE, TYPE 2 WITH STANDARD MANHOLE RING AND COVER PER DETAIL SHEET 17.
56. CONSTRUCT STD. FLAT TOP STORM MANHOLE, TYPE 3 WITH STANDARD MANHOLE RING AND COVER PER DETAIL SHEET 17
57. CONSTRUCT PRIVATE CATCH BASIN PER DETAIL ON SHEET 19. INSTALL STORM PIPE AS SHOWN AND PER "STORM DRAINAGE DATA" INFORMATION TABLE THIS SHEET.
58. CONSTRUCT TYPE 1 COMBINATION CURB INLET PER DETAIL ON SHEET 18. INSTALL STORM PIPE AS SHOWN AND PER "STORM DRAINAGE DATA" INFORMATION TABLE THIS SHEET.
59. CONSTRUCT CATCH BASIN PER DETAIL ON SHEET 18.
60. CONSTRUCT DITCH INLET PER DETAIL ON SHEET 19. INSTALL STORM PIPE AS SHOWN AND PER "STORM DRAINAGE DATA" INFORMATION TABLE THIS SHEET.
61. INSTALL STORM PIPE.
62. INSTALL TRENCH DRAIN AND STORM PIPE. SEE DETAILS ON SHEET 19.
63. REMOVE EXISTING STORM SEWER PIPE AND/OR STRUCTURES. BACKFILL AND COMPACT VOID LEFT FROM EXISTING PIPE AS NECESSARY.
64. EXISTING STORM PIPE AND/OR STRUCTURE TO REMAIN.
65. PLUG AND ABANDON EXISTING STORM PIPE.
66. ADJUST EXISTING MANHOLE CASTING WITH ADJUSTING RINGS/CATCH BASIN/VALVE BOX RIM TO FINISH GRADE.
67. CONNECT TO EXISTING STORM PIPE OR STRUCTURE PER DETAIL ON SHEET 19.
68. INSTALL STORM FILTER VAULT. SEE DETAIL SHEET 38.
69. CONSTRUCT TYPE 1 CURB INLET PER DETAIL ON SHEET 18. INSTALL STORM PIPE AS SHOWN AND PER "STORM DRAINAGE DATA" INFORMATION TABLE THIS SHEET.
73. CONSTRUCT ROADSIDE DITCH, GRADE TO DRAIN TO INLET.
80. RELOCATE (R), PROTECT (P) ADJUST (A) EXISTING SANITARY SEWER CLEANOUT, WATER VALVE OR WATER METER BOX AND/OR SERVICE AS REQUIRED AND DIRECTED. ALL DISTURBED SERVICE LINES SHALL BE REPAIRED AS REQUIRED.
81. EXISTING FIRE HYDRANT TO BE RELOCATED (R), PROTECTED (P), OR ADJUSTED (A). COORDINATE WITH CLARK PUBLIC UTILITIES.
82. PROTECT EXISTING WATER LINE.
90. RELOCATE (R), PROTECT (P), OR ADJUST (A) EXISTING IRRIGATION AS REQUIRED AND DIRECTED. ALL DISTURBED IRRIGATION SHALL BE REPAIRED AS REQUIRED.
91. ADJUST EXISTING SANITARY OR STORM MANHOLE TO FINISH GRADE BY REMOVING CONE SECTION AND ADDITNG FULL MANHOLE SECTION.
92. EXTEND EXISTING SEWER LATERAL TO PROPOSED R/W LINE AND INSTALL CLEANOUT.
93. PROTECT OR REMOVE EXISTING SEPTIC SYSTEM AND INSTALL NEW SEWER SERVICE TO PROPERTY AS DIRECTED BY ENGINEER.

FOR INFORMATIONAL PURPOSES ONLY

ALL PLAN DETAIL AND INFORMATION IS NOT SHOWN ON THIS 90% COMPLETED SET OF PLANS.

90% SUBMITTAL - JULY 2004

DESIGNED: TSH
DRAWN: NPR/RAF
CRP: 330222
HOR. 1" = 20'
VERT. 1" = 5'
DATE: 7/2004
DWG:
SHEET 72 OF 99

CALL 48 HOURS BEFORE YOU DIG
1-800-553-4344
"It's the Law"
NORTHWEST UTILITIES NOTIFICATION CENTER

Harper Houf Peterson Righellis Inc.
ENGINEERS PLANNERS SURVEYORS
1104 MAIN STREET, SUITE 100, VANCOUVER, WA 98660
TEL 360.750.1131 www.hhpr.com FAX 360.750.1141

DESIGN & ENGINEERING DIVISION

NE 88TH STREET
STA 163+00 TO STA 167+50

proud past, promising future
CLARK COUNTY WASHINGTON

P:\Clrk-12 (NE 88th)\CRK12.DWGS\ Crk12-RDEAST1.DWG

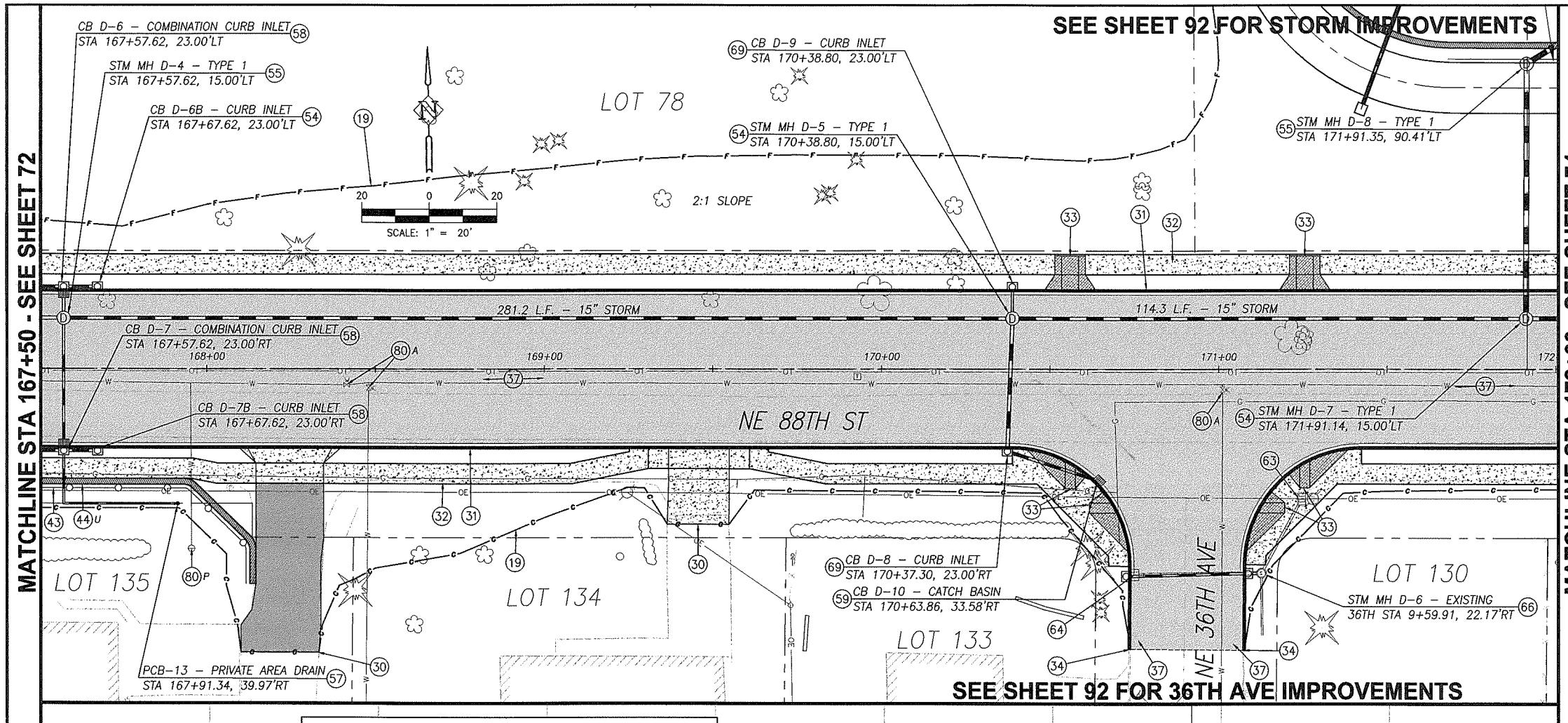

NOTES:
SEE SITE PREPARATION AND DEMOLITION PLAN SHEETS FOR STRUCTURES AND FRANCHISE UTILITY COMMENTS.

CONTRACTOR SHALL POTHOLE TO VERIFY ALL CROSSINGS PRIOR TO CONSTRUCTION TO ENSURE CLEARANCE OF UTILITIES. COORDINATE WITH APPROPRIATE UTILITY AGENCY.

STORM DRAINAGE DATA

CB NO.	CB TYPE	TOP OF CURB	INVERT OUT ELEV	PIPE LATERAL SIZE/LENGTH/SLOPE
D-6	COMB. CURB INLET	274.40	270.71 IN/270.57 OUT	10"/9.3 LF/S = 0.1000
D-6A	CURB INLET	274.41	270.91	10"/10.0 LF/S = 0.0200
D-6B	CURB INLET	274.41	270.91	10"/10.0 LF/S = 0.0200
D-7	COMB. CURB INLET	274.40	269.88 IN/268.90 OUT	10"/39.3 LF/S = 0.1000
D-7A	CURB INLET	274.41	270.08	10"/10.0 LF/S = 0.0200
D-7B	CURB INLET	274.41	270.08	10"/10.0 LF/S = 0.0200
D-8	CURB INLET	274.00	268.60 IN/268.50 OUT	10"/39.4 LF/S = 0.111
D-9	CURB INLET	273.96	269.46	10"/9.3 LF/S = 0.0200
D-10	CATCH BASIN	272.95	269.07	10"/28.56 LF/S = 0.0200
CB NO.	CB TYPE	RIM	INVERT OUT ELEV	PIPE LATERAL SIZE/LENGTH/SLOPE
PCB-13	PVT AREA DRAIN	279.20	273.20	4"/49.4 LF/S = 0.0672

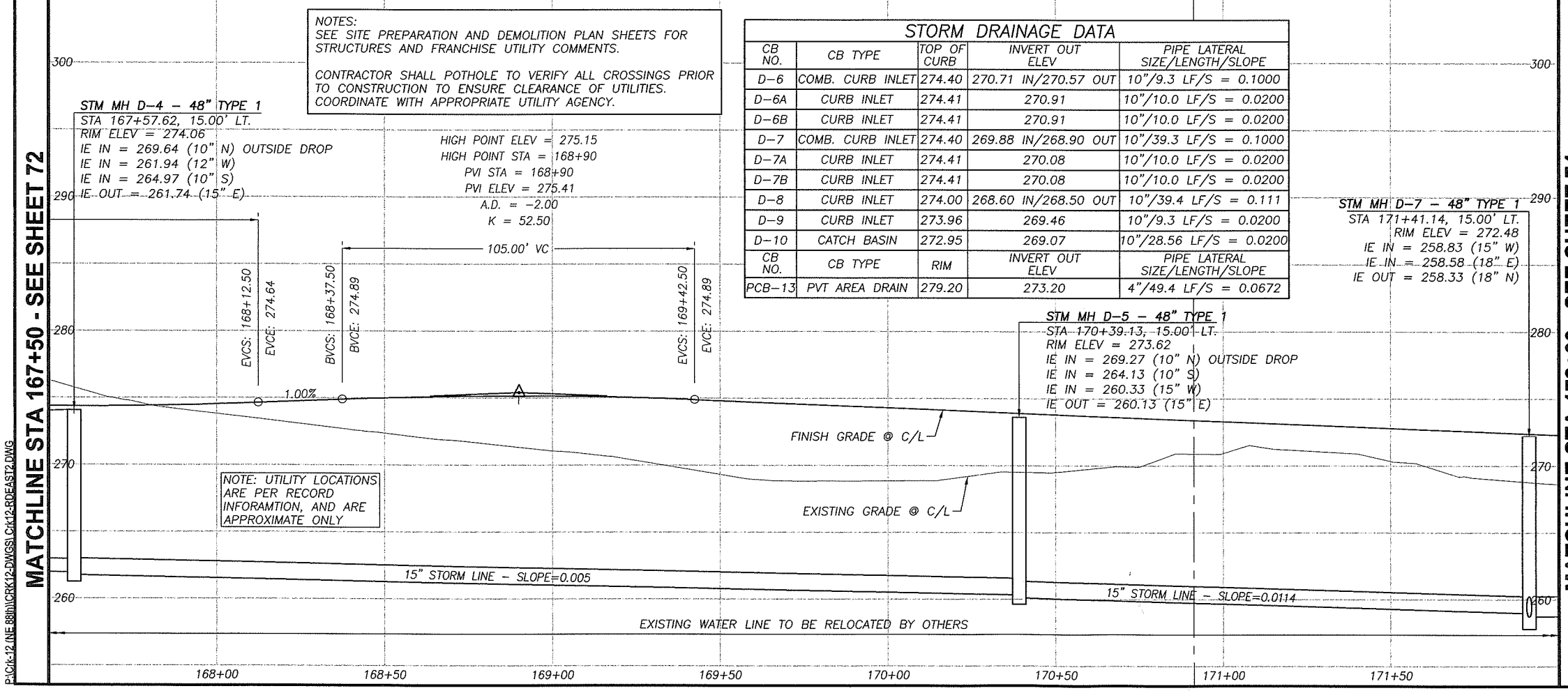

CONSTRUCTION NOTES:

(10) TELEPHONE RISERS AND/OR POLES TO BE REMOVED OR RELOCATED BY OTHERS, UNLESS OTHERWISE NOTED WITH (P) PROTECT. TELEPHONE CABLE TO BE ABANDONED. COORDINATE WORK WITH RON IMAI, US WEST, BY CALLING (360) 699-3546.

(19) LIMITS OF GRADING

(30) CONSTRUCT DRIVEWAY PER DETAIL AND "DRIVEWAY APPROACH SCHEDULE" TABLE ON SHEET 11.

(31) CONSTRUCT CONCRETE CURB AND GUTTER PER DETAIL SHEET 12.

(32) CONSTRUCT CONCRETE SIDEWALK PER DETAIL SHEET 14.

(33) CONSTRUCT CONCRETE CURB RAMP OF TYPE NOTED PER DETAIL SHEET 14.

(34) MATCH NEW CURB TO EXISTING CURB. CURB GRADES ARE BASED ON A 0.5' EXPOSURE. TRANSITION CURB EXPOSURE ON NEW CURB TO MATCH EXISTING CURB AT LEAST 3-FEET PRIOR TO MATCH POINT. IF NECESSARY, SAWCUT EXISTING CURB TO CREATE A CLEAN, UNDISTURBED EDGE.

(35) MATCH NEW SIDEWALK TO EXISTING SIDEWALK. TRANSITION NEW SIDEWALK WIDTH/LOCATION TO MATCH EXISTING WIDTH/LOCATION AT 5:1 PRIOR TO MATCH LINE. IF NECESSARY, SAWCUT EXISTING SIDEWALK TO CREATE A CLEAN, UNDISTURBED EDGE.

(36) CONSTRUCT 6'X6' A.C. LEVEL LANDING AND 6' TRANSITION RAMP FROM END OF SIDEWALK TO SHOULDER. 0.25' MIN CLASS 'A' A.C. OVER 0.4' CRUSHED ROCK.

(37) CONSTRUCT A.C. PAVEMENT RECONSTRUCTION/WIDENING. REFER TO TYPICAL SECTIONS ON SHEETS 8.

(38) CONSTRUCT A.C. OVERLAY. REFER TO TYPICAL SECTIONS ON SHEETS 8.

(39) RELOCATE (R), PROTECT (P), OR ADJUST (A) EXISTING TRAFFIC SIGNAL POLE, PER TRAFFIC SIGNAL PLANS, SHEETS 94 TO 99.

(40) CONSTRUCT EXTRUDED CURB PER CLARK COUNTY STD. DRAWING F18A.

(42) INSTALL FENCE AT LOCATIONS NOTED ON THE PLANS OR AS DIRECTED IN THE FIELD. SEE TYPICAL SECTION ON SHEET 12.

(43) INSTALL FENCE ON RETAINING WALL. SEE RETAINING WALL TABLES FOR DETAILS.

(44) CONSTRUCT RETAINING WALL PER PLAN AND PROFILE ON SHEET 42 TO 56. SEE TYPICAL DETAILS ON SHEETS 40 AND 41.

(54) CONSTRUCT STD. STORM MANHOLE, TYPE 1 WITH STANDARD MANHOLE RING AND COVER PER DETAIL SHEET 17.

(55) CONSTRUCT STD. OVERSIZED STORM MANHOLE, TYPE 2 WITH STANDARD MANHOLE RING AND COVER PER DETAIL SHEET 17.

(56) CONSTRUCT STD. FLAT TOP STORM MANHOLE, TYPE 3 WITH STANDARD MANHOLE RING AND COVER PER DETAIL SHEET 17

(57) CONSTRUCT PRIVATE CATCH BASIN PER DETAIL ON SHEET 19. INSTALL STORM PIPE AS SHOWN AND PER "STORM DRAINAGE DATA" INFORMATION TABLE THIS SHEET.

(58) CONSTRUCT TYPE 1 COMBINATION CURB INLET PER DETAIL ON SHEET 18. INSTALL STORM PIPE AS SHOWN AND PER "STORM DRAINAGE DATA" INFORMATION TABLE THIS SHEET.

(59) CONSTRUCT CATCH BASIN PER DETAIL ON SHEET 18.

(60) CONSTRUCT DITCH INLET PER DETAIL ON SHEET 19. INSTALL STORM PIPE AS SHOWN AND PER "STORM DRAINAGE DATA" INFORMATION TABLE THIS SHEET.

(61) INSTALL STORM PIPE.

(62) INSTALL TRENCH DRAIN AND STORM PIPE. SEE DETAILS ON SHEET 19.

(63) REMOVE EXISTING STORM SEWER PIPE AND/OR STRUCTURES. BACKFILL AND COMPACT VOID LEFT FROM EXISTING PIPE AS NECESSARY.

(64) EXISTING STORM PIPE AND/OR STRUCTURE TO REMAIN.

(65) PLUG AND ABANDON EXISTING STORM PIPE.

(66) ADJUST EXISTING MANHOLE CASTING WITH ADJUSTING RINGS/CATCH BASIN/VALVE BOX RIM TO FINISH GRADE.

(67) CONNECT TO EXISTING STORM PIPE OR STRUCTURE PER DETAIL ON SHEET 19.

(68) INSTALL STORM FILTER VAULT. SEE DETAIL SHEET 38.

(69) CONSTRUCT TYPE 1 CURB INLET PER DETAIL ON SHEET 18. INSTALL STORM PIPE AS SHOWN AND PER "STORM DRAINAGE DATA" INFORMATION TABLE THIS SHEET.

(73) CONSTRUCT ROADSIDE DITCH, GRADE TO DRAIN TO INLET.

(80) RELOCATE (R), PROTECT (P) ADJUST (A) EXISTING SANITARY SEWER CLEANOUT, WATER VALVE OR WATER METER BOX AND/OR SERVICE AS REQUIRED AND DIRECTED. ALL DISTURBED SERVICE LINES SHALL BE REPAIRED AS REQUIRED.

(81) EXISTING FIRE HYDRANT TO BE RELOCATED (R), PROTECTED (P), OR ADJUSTED (A). COORDINATE WITH CLARK PUBLIC UTILITIES.

(82) PROTECT EXISTING WATER LINE.

(90) RELOCATE (R), PROTECT (P), OR ADJUST (A) EXISTING IRRIGATION AS REQUIRED AND DIRECTED. ALL DISTURBED IRRIGATION SHALL BE REPAIRED AS REQUIRED.

(91) ADJUST EXISTING SANITARY OR STORM MANHOLE TO FINISH GRADE BY REMOVING CONE SECTION AND ADDITNG FULL MANHOLE SECTION.

(92) EXTEND EXISTING SEWER LATERAL TO PROPOSED R/W LINE AND INSTALL CLEANOUT.

(93) PROTECT OR REMOVE EXISTING SEPTIC SYSTEM AND INSTALL NEW SEWER SERVICE TO PROPERTY AS DIRECTED BY ENGINEER.

FOR INFORMATIONAL PURPOSES ONLY

ALL PLAN DETAIL AND INFORMATION IS NOT SHOWN ON THIS 90% COMPLETED SET OF PLANS.

90% SUBMITTAL - JULY 2004

DESIGNED: TSH
DRAWN: NPR/RAF
CRP: 330222
HOR. 1" = 20'
VERT. 1" = 5'
DATE: 7/2004
DWG:
SHEET 73 OF 99

CALL 48 HOURS BEFORE YOU DIG
1-800-553-4344
"It's the Law"
NORTHWEST UTILITIES NOTIFICATION CENTER

Harper Houf Peterson Righellis Inc.
ENGINEERS • PLANNERS • SURVEYORS
1104 MAIN STREET, Suite 100, VANCOUVER, WA 98660
TEL 360.750.1131 www.hhpr.com FAX 360.750.1141

DESIGN & ENGINEERING DIVISION
NE 88TH STREET
STA 167+50 TO STA 172+00

proud past, promising future
CLARK COUNTY WASHINGTON

P:\Clrk-12 (NE 88th)\CRK12-DWGS\ Clrk12-RDEAST2.DWG

MATCHLINE STA 172+00 - SEE SHEET 73

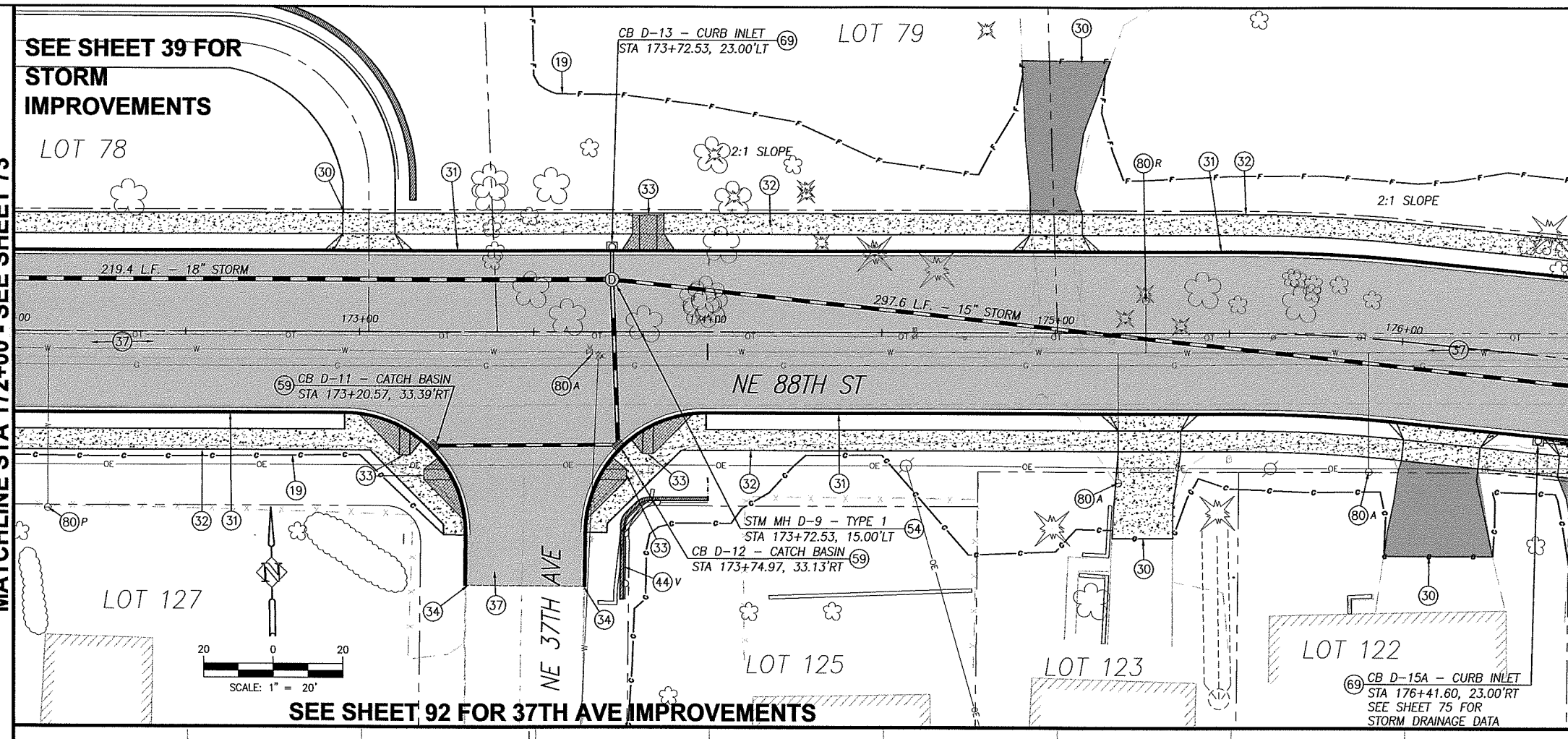

MATCHLINE STA 176+50 - SEE SHEET 75

MATCHLINE STA 172+00 - SEE SHEET 73

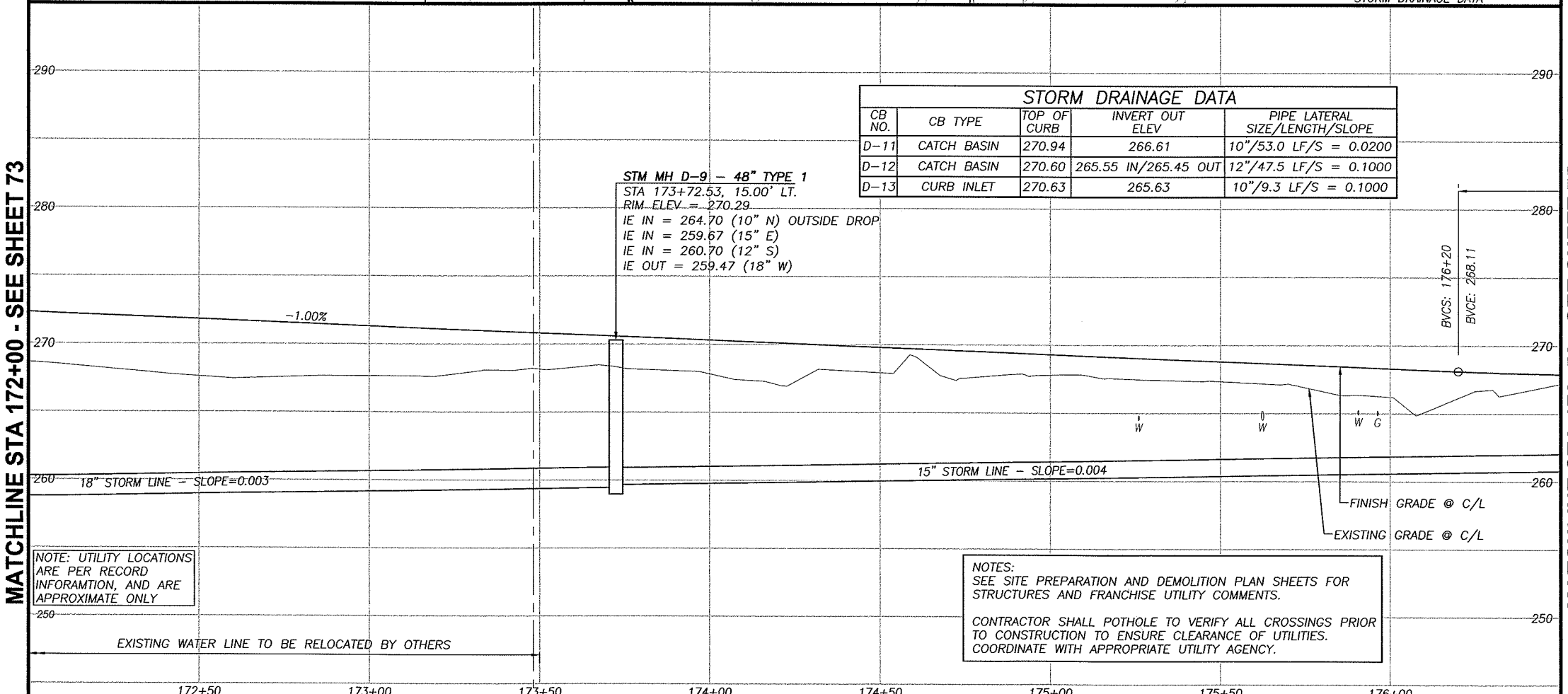

NOTE: UTILITY LOCATIONS ARE PER RECORD INFORAMTION, AND ARE APPROXIMATE ONLY

NOTES:
SEE SITE PREPARATION AND DEMOLITION PLAN SHEETS FOR STRUCTURES AND FRANCHISE UTILITY COMMENTS.

CONTRACTOR SHALL POTHOLE TO VERIFY ALL CROSSINGS PRIOR TO CONSTRUCTION TO ENSURE CLEARANCE OF UTILITIES. COORDINATE WITH APPROPRIATE UTILITY AGENCY.

STORM DRAINAGE DATA

CB NO.	CB TYPE	TOP OF CURB	INVERT OUT ELEV	PIPE LATERAL SIZE/LENGTH/SLOPE
D-11	CATCH BASIN	270.94	266.61	10"/53.0 LF/S = 0.0200
D-12	CATCH BASIN	270.60	265.55 IN/265.45 OUT	12"/47.5 LF/S = 0.1000
D-13	CURB INLET	270.63	265.63	10"/9.3 LF/S = 0.1000

CONSTRUCTION NOTES:

(10) TELEPHONE RISERS AND/OR POLES TO BE REMOVED OR RELOCATED BY OTHERS, UNLESS OTHERWISE NOTED WITH (P) PROTECT. TELEPHONE CABLE TO BE ABANDONED. COORDINATE WORK WITH RON IMAI, US WEST, BY CALLING (360) 699-3546.

(19) LIMITS OF GRADING

(30) CONSTRUCT DRIVEWAY PER DETAIL AND "DRIVEWAY APPROACH SCHEDULE" TABLE ON SHEET 11.

(31) CONSTRUCT CONCRETE CURB AND GUTTER PER DETAIL SHEET 12.

(32) CONSTRUCT CONCRETE SIDEWALK PER DETAIL SHEET 14.

(33) CONSTRUCT CONCRETE CURB RAMP OF TYPE NOTED PER DETAIL SHEET 14.

(34) MATCH NEW CURB TO EXISTING CURB. CURB GRADES ARE BASED ON A 0.5' EXPOSURE. TRANSITION CURB EXPOSURE ON NEW CURB TO MATCH EXISTING CURB AT LEAST 3-FEET PRIOR TO MATCH POINT. IF NECESSARY, SAWCUT EXISTING CURB TO CREATE A CLEAN, UNDISTURBED EDGE.

(35) MATCH NEW SIDEWALK TO EXISTING SIDEWALK. TRANSITION NEW SIDEWALK WIDTH/LOCATION TO MATCH EXISTING WIDTH/LOCATION AT 5:1 PRIOR TO MATCH LINE. IF NECESSARY, SAWCUT EXISTING SIDEWALK TO CREATE A CLEAN, UNDISTURBED EDGE.

(36) CONSTRUCT 6'X6' A.C. LEVEL LANDING AND 6' TRANSITION RAMP FROM END OF SIDEWALK TO SHOULDER. 0.25' MIN CLASS 'A' A.C. OVER 0.4' CRUSHED ROCK.

(37) CONSTRUCT A.C. PAVEMENT RECONSTRUCTION/WIDENING. REFER TO TYPICAL SECTIONS ON SHEETS 8.

(38) CONSTRUCT A.C. OVERLAY. REFER TO TYPICAL SECTIONS ON SHEETS 8.

(39) RELOCATE (R), PROTECT (P), OR ADJUST (A) EXISTING TRAFFIC SIGNAL POLE, PER TRAFFIC SIGNAL PLANS, SHEETS 94 TO 99.

(40) CONSTRUCT EXTRUDED CURB PER CLARK COUNTY STD. DRAWING F18A.

(42) INSTALL FENCE AT LOCATIONS NOTED ON THE PLANS OR AS DIRECTED IN THE FIELD. SEE TYPICAL SECTION ON SHEET 12.

(43) INSTALL FENCE ON RETAINING WALL. SEE RETAINING WALL TABLES FOR DETAILS.

(44) CONSTRUCT RETAINING WALL PER PLAN AND PROFILE ON SHEET 42 TO 56. SEE TYPICAL DETAILS ON SHEETS 40 AND 41.

(54) CONSTRUCT STD. STORM MANHOLE, TYPE 1 WITH STANDARD MANHOLE RING AND COVER PER DETAIL SHEET 17.

(55) CONSTRUCT STD. OVERSIZED STORM MANHOLE, TYPE 2 WITH STANDARD MANHOLE RING AND COVER PER DETAIL SHEET 17.

(56) CONSTRUCT STD. FLAT TOP STORM MANHOLE, TYPE 3 WITH STANDARD MANHOLE RING AND COVER PER DETAIL SHEET 17

(57) CONSTRUCT PRIVATE CATCH BASIN PER DETAIL ON SHEET 19. INSTALL STORM PIPE AS SHOWN AND PER "STORM DRAINAGE DATA" INFORMATION TABLE THIS SHEET.

(58) CONSTRUCT TYPE 1 COMBINATION CURB INLET PER DETAIL ON SHEET 18. INSTALL STORM PIPE AS SHOWN AND PER "STORM DRAINAGE DATA" INFORMATION TABLE THIS SHEET.

(59) CONSTRUCT CATCH BASIN PER DETAIL ON SHEET 18.

(60) CONSTRUCT DITCH INLET PER DETAIL ON SHEET 19. INSTALL STORM PIPE AS SHOWN AND PER "STORM DRAINAGE DATA" INFORMATION TABLE THIS SHEET.

(61) INSTALL STORM PIPE.

(62) INSTALL TRENCH DRAIN AND STORM PIPE. SEE DETAILS ON SHEET 19.

(63) REMOVE EXISTING STORM SEWER PIPE AND/OR STRUCTURES. BACKFILL AND COMPACT VOID LEFT FROM EXISTING PIPE AS NECESSARY.

(64) EXISTING STORM PIPE AND/OR STRUCTURE TO REMAIN.

(65) PLUG AND ABANDON EXISTING STORM PIPE.

(66) ADJUST EXISTING MANHOLE CASTING WITH ADJUSTING RINGS/CATCH BASIN/VALVE BOX RIM TO FINISH GRADE.

(67) CONNECT TO EXISTING STORM PIPE OR STRUCTURE PER DETAIL ON SHEET 19.

(68) INSTALL STORM FILTER VAULT. SEE DETAIL SHEET 38.

(69) CONSTRUCT TYPE 1 CURB INLET PER DETAIL ON SHEET 18. INSTALL STORM PIPE AS SHOWN AND PER "STORM DRAINAGE DATA" INFORMATION TABLE THIS SHEET.

(73) CONSTRUCT ROADSIDE DITCH, GRADE TO DRAIN TO INLET.

(80) RELOCATE (R), PROTECT (P) ADJUST (A) EXISTING SANITARY SEWER CLEANOUT, WATER VALVE OR WATER METER BOX AND/OR SERVICE AS REQUIRED AND DIRECTED. ALL DISTURBED SERVICE LINES SHALL BE REPAIRED AS REQUIRED.

(81) EXISTING FIRE HYDRANT TO BE RELOCATED (R), PROTECTED (P), OR ADJUSTED (A). COORDINATE WITH CLARK PUBLIC UTILITIES.

(82) PROTECT EXISTING WATER LINE.

(90) RELOCATE (R), PROTECT (P), OR ADJUST (A) EXISTING IRRIGATION AS REQUIRED AND DIRECTED. ALL DISTURBED IRRIGATION SHALL BE REPAIRED AS REQUIRED.

(91) ADJUST EXISTING SANITARY OR STORM MANHOLE TO FINISH GRADE BY REMOVING CONE SECTION AND ADDITNG FULL MANHOLE SECTION.

(92) EXTEND EXISTING SEWER LATERAL TO PROPOSED R/W LINE AND INSTALL CLEANOUT.

(93) PROTECT OR REMOVE EXISTING SEPTIC SYSTEM AND INSTALL NEW SEWER SERVICE TO PROPERTY AS DIRECTED BY ENGINEER.

FOR INFORMATIONAL PURPOSES ONLY

ALL PLAN DETAIL AND INFORMATION IS NOT SHOWN ON THIS 90% COMPLETED SET OF PLANS.

90% SUBMITTAL - JULY 2004

DESIGNED:	TSH
DRAWN:	NPR/RAF
CRP:	330222
HOR.	1" = 20'
VERT.	1" = 5'
DATE:	7/2004
DWG:	
SHEET	74 OF 99

CALL 48 HOURS BEFORE YOU DIG
1-800-553-4344
"It's the Law"
NORTHWEST UTILITIES NOTIFICATION CENTER

Harper Houf Peterson Righellis Inc.
ENGINEERS • PLANNERS • SURVEYORS
1104 MAIN STREET, SUITE 100, VANCOUVER, WA 98660
TEL 360.750.1131 www.hhpr.com FAX 360.750.1141

DESIGN & ENGINEERING DIVISION

NE 88TH STREET
STA 172+00 TO STA 176+50

proud past, promising future
CLARK COUNTY WASHINGTON

P:\Clrk-12 (NE 88th)\CRK12-DWGS\Crk12-RDEAST2.DWG

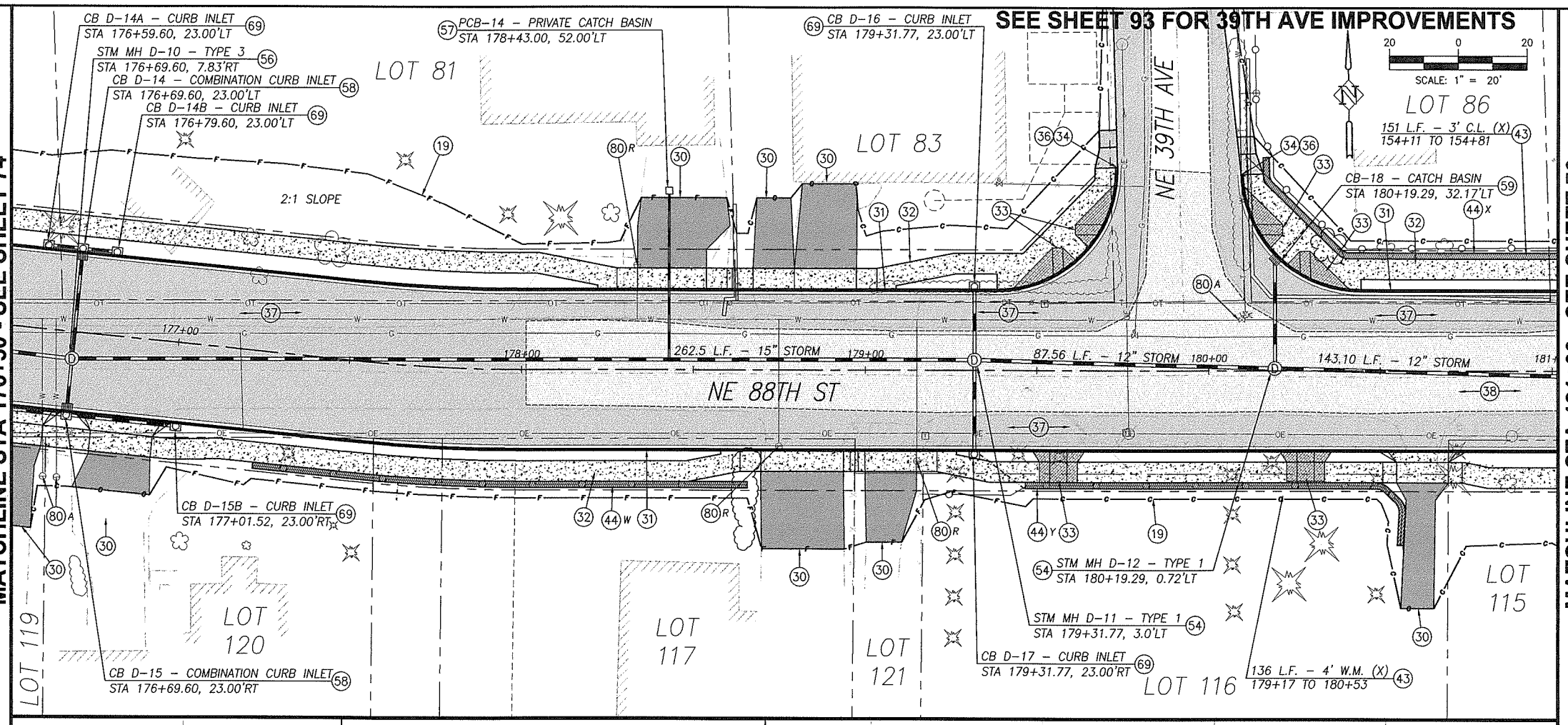

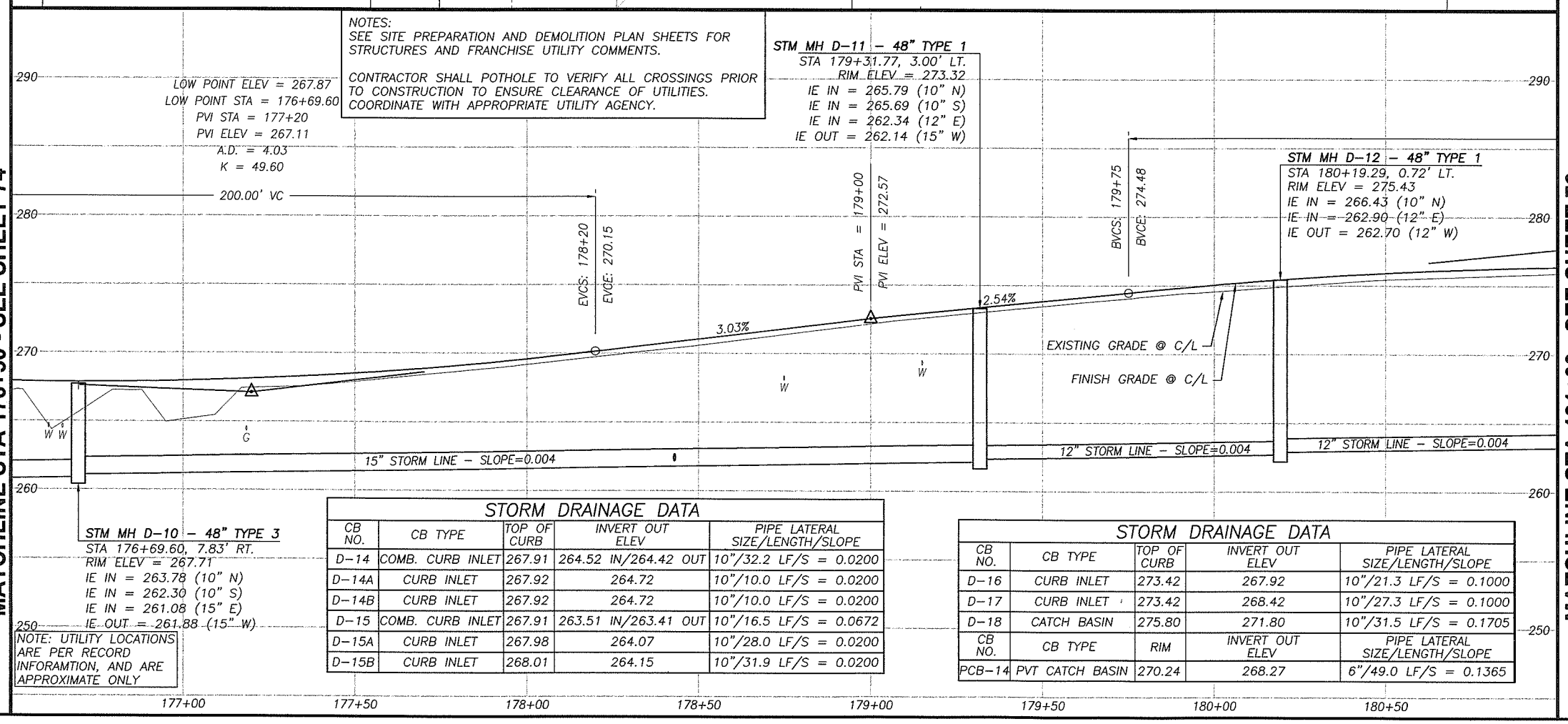

STORM DRAINAGE DATA

CB NO.	CB TYPE	TOP OF CURB	INVERT OUT ELEV	PIPE LATERAL SIZE/LENGTH/SLOPE
D-14	COMB. CURB INLET	267.91	264.52 IN/264.42 OUT	10"/32.2 LF/S = 0.0200
D-14A	CURB INLET	267.92	264.72	10"/10.0 LF/S = 0.0200
D-14B	CURB INLET	267.92	264.72	10"/10.0 LF/S = 0.0200
D-15	COMB. CURB INLET	267.91	263.51 IN/263.41 OUT	10"/16.5 LF/S = 0.0672
D-15A	CURB INLET	267.98	264.07	10"/28.0 LF/S = 0.0200
D-15B	CURB INLET	268.01	264.15	10"/31.9 LF/S = 0.0200

STORM DRAINAGE DATA

CB NO.	CB TYPE	TOP OF CURB	INVERT OUT ELEV	PIPE LATERAL SIZE/LENGTH/SLOPE
D-16	CURB INLET	273.42	267.92	10"/21.3 LF/S = 0.1000
D-17	CURB INLET	273.42	268.42	10"/27.3 LF/S = 0.1000
D-18	CATCH BASIN	275.80	271.80	10"/31.5 LF/S = 0.1705
CB NO.	CB TYPE	RIM	INVERT OUT ELEV	PIPE LATERAL SIZE/LENGTH/SLOPE
PCB-14	PVT CATCH BASIN	270.24	268.27	6"/49.0 LF/S = 0.1365

CONSTRUCTION NOTES:

(10) TELEPHONE RISERS AND/OR POLES TO BE REMOVED OR RELOCATED BY OTHERS, UNLESS OTHERWISE NOTED WITH (P) PROTECT. TELEPHONE CABLE TO BE ABANDONED. COORDINATE WORK WITH RON IMAI, US WEST, BY CALLING (360) 699-3546.

(19) LIMITS OF GRADING

(30) CONSTRUCT DRIVEWAY PER DETAIL AND "DRIVEWAY APPROACH SCHEDULE" TABLE ON SHEET 11.

(31) CONSTRUCT CONCRETE CURB AND GUTTER PER DETAIL SHEET 12.

(32) CONSTRUCT CONCRETE SIDEWALK PER DETAIL SHEET 14.

(33) CONSTRUCT CONCRETE CURB RAMP OF TYPE NOTED PER DETAIL SHEET 14.

(34) MATCH NEW CURB TO EXISTING CURB. CURB GRADES ARE BASED ON A 0.5' EXPOSURE. TRANSITION CURB EXPOSURE ON NEW CURB TO MATCH EXISTING CURB AT LEAST 3-FEET PRIOR TO MATCH POINT. IF NECESSARY, SAWCUT EXISTING CURB TO CREATE A CLEAN, UNDISTURBED EDGE.

(35) MATCH NEW SIDEWALK TO EXISTING SIDEWALK. TRANSITION NEW SIDEWALK WIDTH/LOCATION TO MATCH EXISTING WIDTH/LOCATION AT 5:1 PRIOR TO MATCH LINE. IF NECESSARY, SAWCUT EXISTING SIDEWALK TO CREATE A CLEAN, UNDISTURBED EDGE.

(36) CONSTRUCT 6'X6' A.C. LEVEL LANDING AND 6' TRANSITION RAMP FROM END OF SIDEWALK TO SHOULDER. 0.25' MIN CLASS 'A' A.C. OVER 0.4' CRUSHED ROCK.

(37) CONSTRUCT A.C. PAVEMENT RECONSTRUCTION/WIDENING. REFER TO TYPICAL SECTIONS ON SHEETS 8.

(38) CONSTRUCT A.C. OVERLAY. REFER TO TYPICAL SECTIONS ON SHEETS 8.

(39) RELOCATE (R), PROTECT (P), OR ADJUST (A) EXISTING TRAFFIC SIGNAL POLE, PER TRAFFIC SIGNAL PLANS, SHEETS 94 TO 99.

(40) CONSTRUCT EXTRUDED CURB PER CLARK COUNTY STD. DRAWING F18A.

(42) INSTALL FENCE AT LOCATIONS NOTED ON THE PLANS OR AS DIRECTED IN THE FIELD. SEE TYPICAL SECTION ON SHEET 12.

(43) INSTALL FENCE ON RETAINING WALL. SEE RETAINING WALL TABLES FOR DETAILS.

(44) CONSTRUCT RETAINING WALL PER PLAN AND PROFILE ON SHEET 42 TO 56. SEE TYPICAL DETAILS ON SHEETS 40 AND 41.

(54) CONSTRUCT STD. STORM MANHOLE, TYPE 1 WITH STANDARD MANHOLE RING AND COVER PER DETAIL SHEET 17.

(55) CONSTRUCT STD. OVERSIZED STORM MANHOLE, TYPE 2 WITH STANDARD MANHOLE RING AND COVER PER DETAIL SHEET 17.

(56) CONSTRUCT STD. FLAT TOP STORM MANHOLE, TYPE 3 WITH STANDARD MANHOLE RING AND COVER PER DETAIL SHEET 17

(57) CONSTRUCT PRIVATE CATCH BASIN PER DETAIL ON SHEET 19. INSTALL STORM PIPE AS SHOWN AND PER "STORM DRAINAGE DATA" INFORMATION TABLE THIS SHEET.

(58) CONSTRUCT TYPE 1 COMBINATION CURB INLET PER DETAIL ON SHEET 18. INSTALL STORM PIPE AS SHOWN AND PER "STORM DRAINAGE DATA" INFORMATION TABLE THIS SHEET.

(59) CONSTRUCT CATCH BASIN PER DETAIL ON SHEET 18.

(60) CONSTRUCT DITCH INLET PER DETAIL ON SHEET 19. INSTALL STORM PIPE AS SHOWN AND PER "STORM DRAINAGE DATA" INFORMATION TABLE THIS SHEET.

(61) INSTALL STORM PIPE.

(62) INSTALL TRENCH DRAIN AND STORM PIPE. SEE DETAILS ON SHEET 19.

(63) REMOVE EXISTING STORM SEWER PIPE AND/OR STRUCTURES. BACKFILL AND COMPACT VOID LEFT FROM EXISTING PIPE AS NECESSARY.

(64) EXISTING STORM PIPE AND/OR STRUCTURE TO REMAIN.

(65) PLUG AND ABANDON EXISTING STORM PIPE.

(66) ADJUST EXISTING MANHOLE CASTING WITH ADJUSTING RINGS/CATCH BASIN/VALVE BOX RIM TO FINISH GRADE.

(67) CONNECT TO EXISTING STORM PIPE OR STRUCTURE PER DETAIL ON SHEET 19.

(68) INSTALL STORM FILTER VAULT. SEE DETAIL SHEET 38.

(69) CONSTRUCT TYPE 1 CURB INLET PER DETAIL ON SHEET 18. INSTALL STORM PIPE AS SHOWN AND PER "STORM DRAINAGE DATA" INFORMATION TABLE THIS SHEET.

(73) CONSTRUCT ROADSIDE DITCH, GRADE TO DRAIN TO INLET.

(80) RELOCATE (R), PROTECT (P) ADJUST (A) EXISTING SANITARY SEWER CLEANOUT, WATER VALVE OR WATER METER BOX AND/OR SERVICE AS REQUIRED AND DIRECTED. ALL DISTURBED SERVICE LINES SHALL BE REPAIRED AS REQUIRED.

(81) EXISTING FIRE HYDRANT TO BE RELOCATED (R), PROTECTED (P), OR ADJUSTED (A). COORDINATE WITH CLARK PUBLIC UTILITIES.

(82) PROTECT EXISTING WATER LINE.

(90) RELOCATE (R), PROTECT (P), OR ADJUST (A) EXISTING IRRIGATION AS REQUIRED AND DIRECTED. ALL DISTURBED IRRIGATION SHALL BE REPAIRED AS REQUIRED.

(91) ADJUST EXISTING SANITARY OR STORM MANHOLE TO FINISH GRADE BY REMOVING CONE SECTION AND ADDITNG FULL MANHOLE SECTION.

(92) EXTEND EXISTING SEWER LATERAL TO PROPOSED R/W LINE AND INSTALL CLEANOUT.

(93) PROTECT OR REMOVE EXISTING SEPTIC SYSTEM AND INSTALL NEW SEWER SERVICE TO PROPERTY AS DIRECTED BY ENGINEER.

FOR INFORMATIONAL PURPOSES ONLY

ALL PLAN DETAIL AND INFORMATION IS NOT SHOWN ON THIS 90% COMPLETED SET OF PLANS.

90% SUBMITTAL - JULY 2004

DESIGNED:	TSH
DRAWN:	NPR/RAF
CRP:	330222
HOR.	1" = 20'
VERT.	1" = 5'
DATE:	7/2004
DWG:	
SHEET	75 OF 99

CALL 48 HOURS BEFORE YOU DIG 1-800-553-4344 "It's the Law" NORTHWEST UTILITIES NOTIFICATION CENTER

Harper Houf Peterson Righellis Inc.
ENGINEERS · PLANNERS · SURVEYORS
1104 MAIN STREET, SUITE 100, VANCOUVER, WA 98660
TEL 360.750.1131 www.hhpr.com FAX 360.750.1141

DESIGN & ENGINEERING DIVISION

NE 88TH STREET
STA 176+50 TO STA 181+00

proud past, promising future
CLARK COUNTY WASHINGTON

P:\Clk-12 NE 88th\CRK12-DWGS\ Clk12-RDEAST2.DWG

MATCHLINE STA 181+00 - SEE SHEET 75

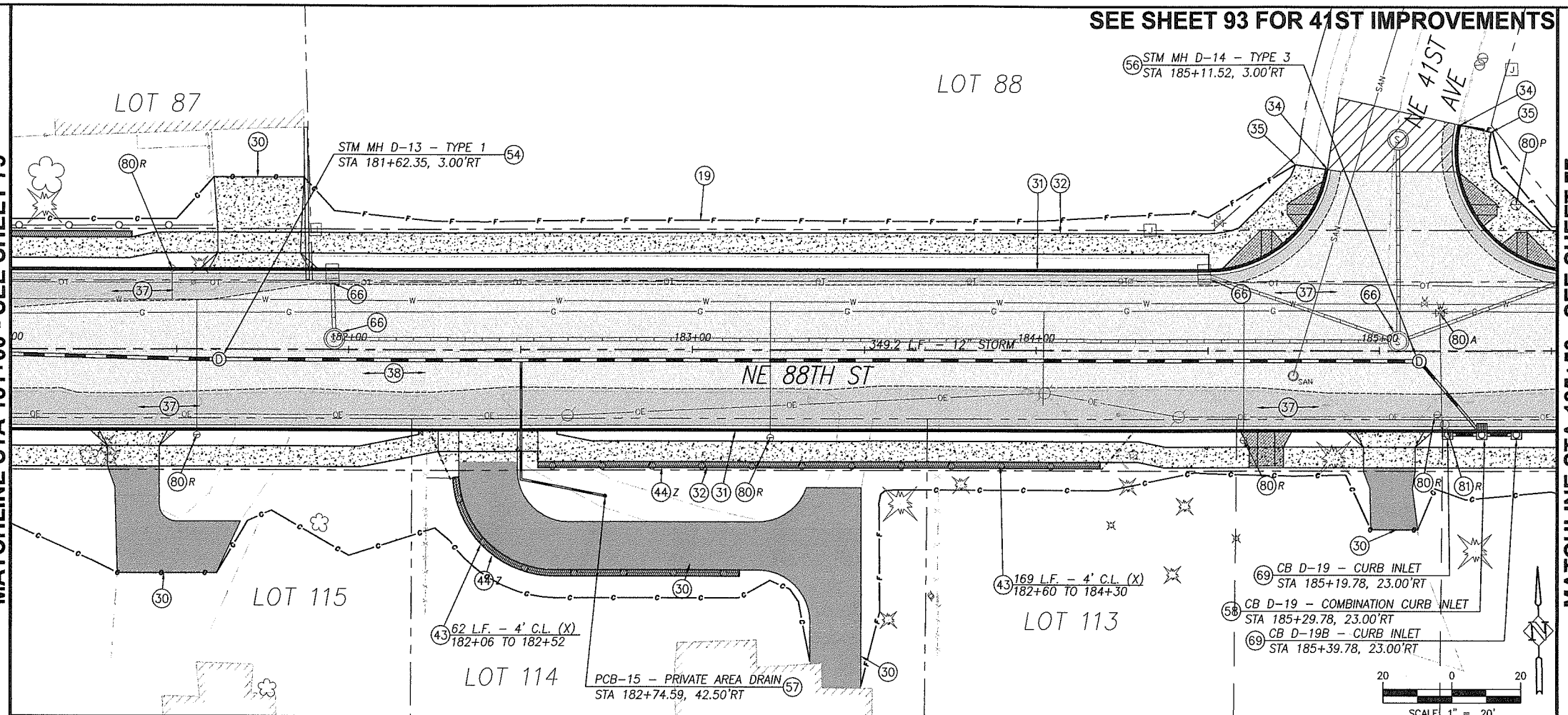

MATCHLINE STA 185+50 - SEE SHEET 77

MATCHLINE STA 181+00 - SEE SHEET 75

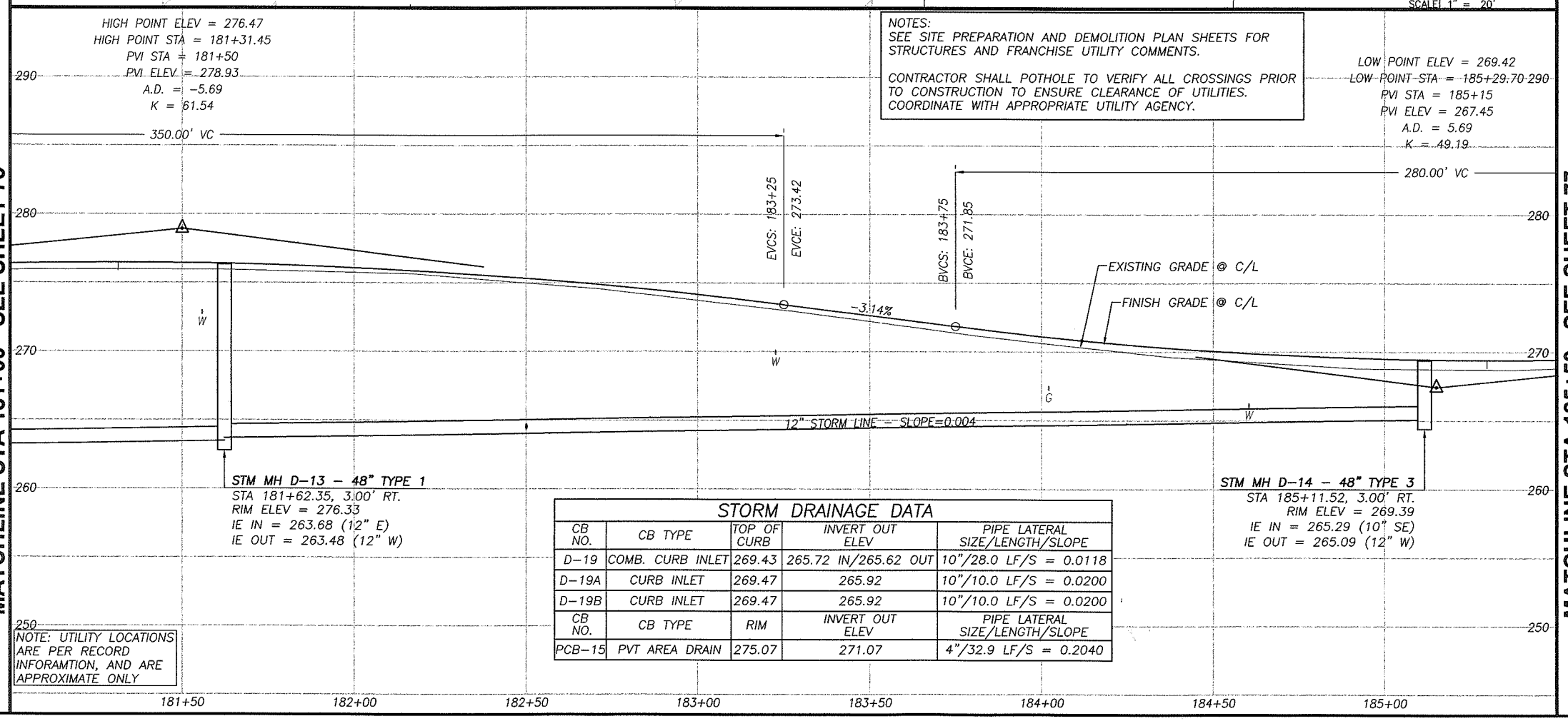

NOTES:
SEE SITE PREPARATION AND DEMOLITION PLAN SHEETS FOR STRUCTURES AND FRANCHISE UTILITY COMMENTS.

CONTRACTOR SHALL POTHOLE TO VERIFY ALL CROSSINGS PRIOR TO CONSTRUCTION TO ENSURE CLEARANCE OF UTILITIES. COORDINATE WITH APPROPRIATE UTILITY AGENCY.

NOTE: UTILITY LOCATIONS ARE PER RECORD INFORAMTION, AND ARE APPROXIMATE ONLY

STORM DRAINAGE DATA

CB NO.	CB TYPE	TOP OF CURB	INVERT OUT ELEV	PIPE LATERAL SIZE/LENGTH/SLOPE
D-19	COMB. CURB INLET	269.43	265.72 IN/265.62 OUT	10"/28.0 LF/S = 0.0118
D-19A	CURB INLET	269.47	265.92	10"/10.0 LF/S = 0.0200
D-19B	CURB INLET	269.47	265.92	10"/10.0 LF/S = 0.0200
CB NO.	CB TYPE	RIM	INVERT OUT ELEV	PIPE LATERAL SIZE/LENGTH/SLOPE
PCB-15	PVT AREA DRAIN	275.07	271.07	4"/32.9 LF/S = 0.2040

MATCHLINE STA 185+50 - SEE SHEET 77

CONSTRUCTION NOTES:

(10) TELEPHONE RISERS AND/OR POLES TO BE REMOVED OR RELOCATED BY OTHERS, UNLESS OTHERWISE NOTED WITH (P) PROTECT. TELEPHONE CABLE TO BE ABANDONED. COORDINATE WORK WITH RON IMAI, US WEST, BY CALLING (360) 699-3546.

(19) LIMITS OF GRADING

(30) CONSTRUCT DRIVEWAY PER DETAIL AND "DRIVEWAY APPROACH SCHEDULE" TABLE ON SHEET 11.

(31) CONSTRUCT CONCRETE CURB AND GUTTER PER DETAIL SHEET 12.

(32) CONSTRUCT CONCRETE SIDEWALK PER DETAIL SHEET 14.

(33) CONSTRUCT CONCRETE CURB RAMP OF TYPE NOTED PER DETAIL SHEET 14.

(34) MATCH NEW CURB TO EXISTING CURB. CURB GRADES ARE BASED ON A 0.5' EXPOSURE. TRANSITION CURB EXPOSURE ON NEW CURB TO MATCH EXISTING CURB AT LEAST 3-FEET PRIOR TO MATCH POINT. IF NECESSARY, SAWCUT EXISTING CURB TO CREATE A CLEAN, UNDISTURBED EDGE.

(35) MATCH NEW SIDEWALK TO EXISTING SIDEWALK. TRANSITION NEW SIDEWALK WIDTH/LOCATION TO MATCH EXISTING WIDTH/LOCATION AT 5:1 PRIOR TO MATCH LINE. IF NECESSARY, SAWCUT EXISTING SIDEWALK TO CREATE A CLEAN, UNDISTURBED EDGE.

(36) CONSTRUCT 6'X6' A.C. LEVEL LANDING AND 6' TRANSITION RAMP FROM END OF SIDEWALK TO SHOULDER. 0.25' MIN CLASS 'A' A.C. OVER 0.4' CRUSHED ROCK.

(37) CONSTRUCT A.C. PAVEMENT RECONSTRUCTION/WIDENING. REFER TO TYPICAL SECTIONS ON SHEETS 8.

(38) CONSTRUCT A.C. OVERLAY. REFER TO TYPICAL SECTIONS ON SHEETS 8.

(39) RELOCATE (R), PROTECT (P), OR ADJUST (A) EXISTING TRAFFIC SIGNAL POLE, PER TRAFFIC SIGNAL PLANS, SHEETS 94 TO 99.

(40) CONSTRUCT EXTRUDED CURB PER CLARK COUNTY STD. DRAWING F18A.

(42) INSTALL FENCE AT LOCATIONS NOTED ON THE PLANS OR AS DIRECTED IN THE FIELD. SEE TYPICAL SECTION ON SHEET 12.

(43) INSTALL FENCE ON RETAINING WALL. SEE RETAINING WALL TABLES FOR DETAILS.

(44) CONSTRUCT RETAINING WALL PER PLAN AND PROFILE ON SHEET 42 TO 56. SEE TYPICAL DETAILS ON SHEETS 40 AND 41.

(54) CONSTRUCT STD. STORM MANHOLE, TYPE 1 WITH STANDARD MANHOLE RING AND COVER PER DETAIL SHEET 17.

(55) CONSTRUCT STD. OVERSIZED STORM MANHOLE, TYPE 2 WITH STANDARD MANHOLE RING AND COVER PER DETAIL SHEET 17.

(56) CONSTRUCT STD. FLAT TOP STORM MANHOLE, TYPE 3 WITH STANDARD MANHOLE RING AND COVER PER DETAIL SHEET 17

(57) CONSTRUCT PRIVATE CATCH BASIN PER DETAIL ON SHEET 19. INSTALL STORM PIPE AS SHOWN AND PER "STORM DRAINAGE DATA" INFORMATION TABLE THIS SHEET.

(58) CONSTRUCT TYPE 1 COMBINATION CURB INLET PER DETAIL ON SHEET 18. INSTALL STORM PIPE AS SHOWN AND PER "STORM DRAINAGE DATA" INFORMATION TABLE THIS SHEET.

(59) CONSTRUCT CATCH BASIN PER DETAIL ON SHEET 18.

(60) CONSTRUCT DITCH INLET PER DETAIL ON SHEET 19. INSTALL STORM PIPE AS SHOWN AND PER "STORM DRAINAGE DATA" INFORMATION TABLE THIS SHEET.

(61) INSTALL STORM PIPE.

(62) INSTALL TRENCH DRAIN AND STORM PIPE. SEE DETAILS ON SHEET 19.

(63) REMOVE EXISTING STORM SEWER PIPE AND/OR STRUCTURES. BACKFILL AND COMPACT VOID LEFT FROM EXISTING PIPE AS NECESSARY.

(64) EXISTING STORM PIPE AND/OR STRUCTURE TO REMAIN.

(65) PLUG AND ABANDON EXISTING STORM PIPE.

(66) ADJUST EXISTING MANHOLE CASTING WITH ADJUSTING RINGS/CATCH BASIN/VALVE BOX RIM TO FINISH GRADE.

(67) CONNECT TO EXISTING STORM PIPE OR STRUCTURE PER DETAIL ON SHEET 19.

(68) INSTALL STORM FILTER VAULT. SEE DETAIL SHEET 38.

(69) CONSTRUCT TYPE 1 CURB INLET PER DETAIL ON SHEET 18. INSTALL STORM PIPE AS SHOWN AND PER "STORM DRAINAGE DATA" INFORMATION TABLE THIS SHEET.

(73) CONSTRUCT ROADSIDE DITCH, GRADE TO DRAIN TO INLET.

(80) RELOCATE (R), PROTECT (P) ADJUST (A) EXISTING SANITARY SEWER CLEANOUT, WATER VALVE OR WATER METER BOX AND/OR SERVICE AS REQUIRED AND DIRECTED. ALL DISTURBED SERVICE LINES SHALL BE REPAIRED AS REQUIRED.

(81) EXISTING FIRE HYDRANT TO BE RELOCATED (R), PROTECTED (P), OR ADJUSTED (A). COORDINATE WITH CLARK PUBLIC UTILITIES.

(82) PROTECT EXISTING WATER LINE.

(90) RELOCATE (R), PROTECT (P), OR ADJUST (A) EXISTING IRRIGATION AS REQUIRED AND DIRECTED. ALL DISTURBED IRRIGATION SHALL BE REPAIRED AS REQUIRED.

(91) ADJUST EXISTING SANITARY OR STORM MANHOLE TO FINISH GRADE BY REMOVING CONE SECTION AND ADDITNG FULL MANHOLE SECTION.

(92) EXTEND EXISTING SEWER LATERAL TO PROPOSED R/W LINE AND INSTALL CLEANOUT.

(93) PROTECT OR REMOVE EXISTING SEPTIC SYSTEM AND INSTALL NEW SEWER SERVICE TO PROPERTY AS DIRECTED BY ENGINEER.

FOR INFORMATIONAL PURPOSES ONLY

ALL PLAN DETAIL AND INFORMATION IS NOT SHOWN ON THIS 90% COMPLETED SET OF PLANS.

90% SUBMITTAL - JULY 2004

DESIGNED:	TSH
DRAWN:	NPR/RAF
CRP:	330222
HOR.	1" = 20'
VERT.	1" = 5'
DATE:	7/2004
DWG:	
SHEET	76 OF 99

CALL 48 HOURS BEFORE YOU DIG 1-800-553-4344 "It's the Law" NORTHWEST UTILITIES NOTIFICATION CENTER

Harper Houf Peterson Righellis Inc.
ENGINEERS • PLANNERS • SURVEYORS
1104 MAIN STREET, SUITE 100, VANCOUVER, WA 98660
TEL 360.750.1131 www.hhpr.com FAX 360.750.1141

DESIGN & ENGINEERING DIVISION

NE 88TH STREET
STA 181+00 TO STA 185+50

proud past, promising future

CLARK COUNTY WASHINGTON

P:\Clrk-12 NE 88th\ICRK12-DWGS\Crk12-RDEAST2.DWG

MATCHLINE STA 185+50 - SEE SHEET 76

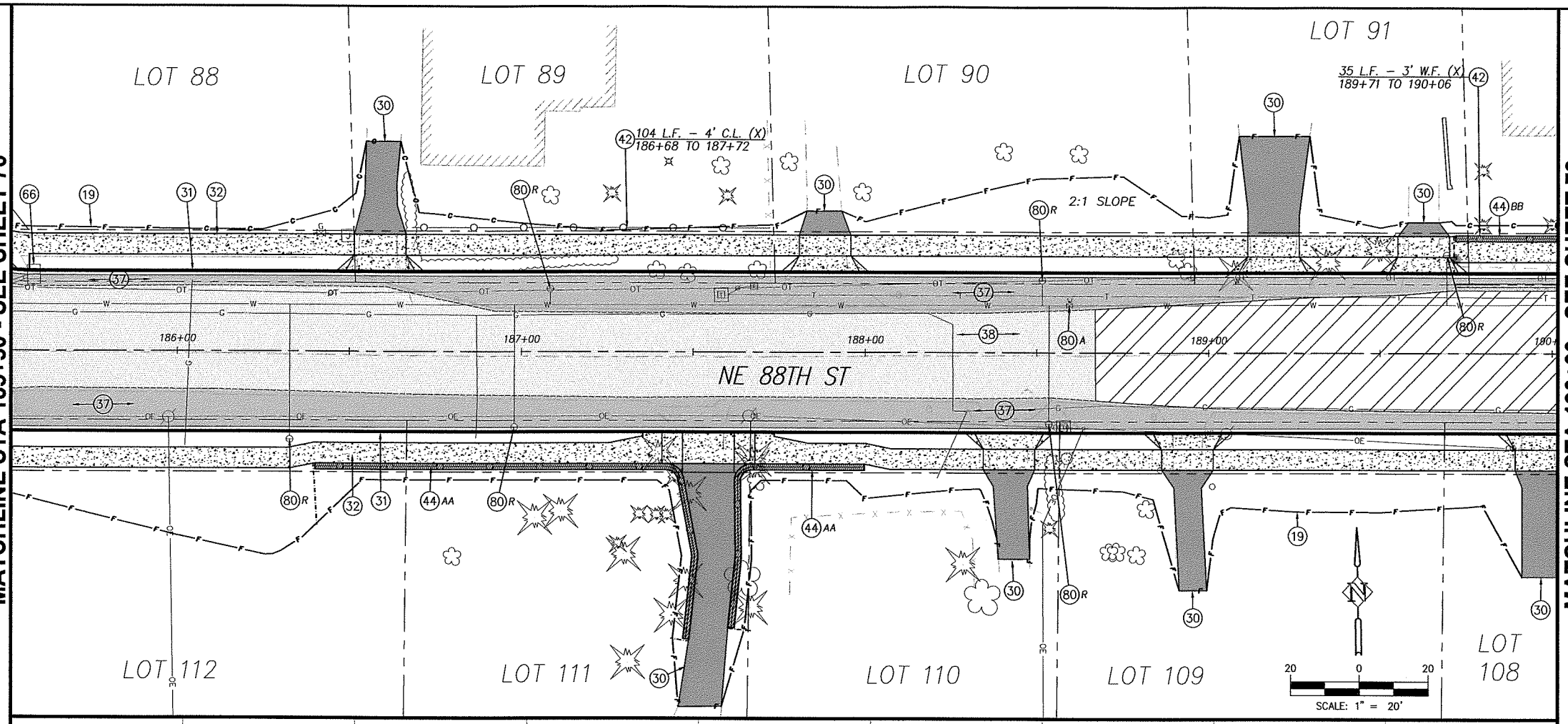

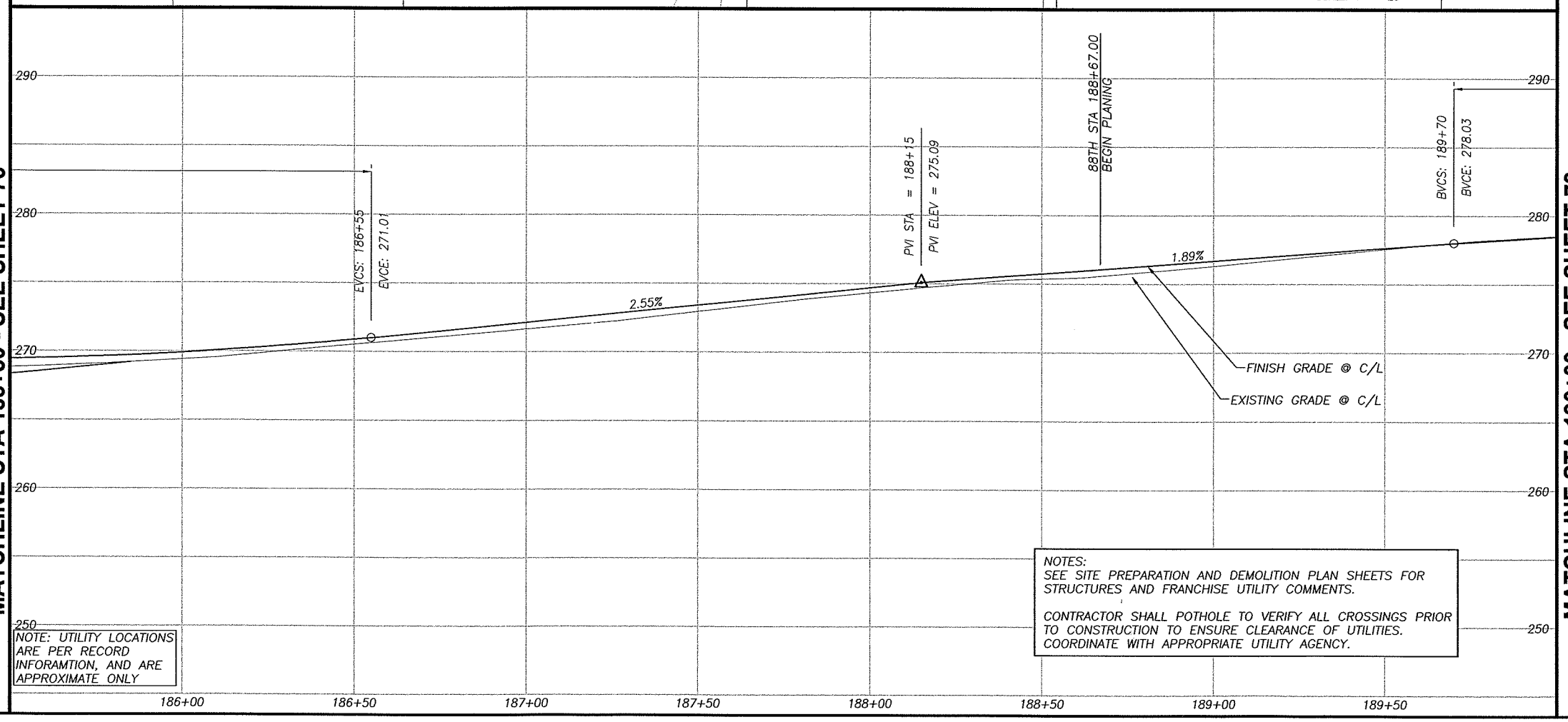

NOTE: UTILITY LOCATIONS ARE PER RECORD INFORAMTION, AND ARE APPROXIMATE ONLY

NOTES:
SEE SITE PREPARATION AND DEMOLITION PLAN SHEETS FOR STRUCTURES AND FRANCHISE UTILITY COMMENTS.

CONTRACTOR SHALL POTHOLE TO VERIFY ALL CROSSINGS PRIOR TO CONSTRUCTION TO ENSURE CLEARANCE OF UTILITIES. COORDINATE WITH APPROPRIATE UTILITY AGENCY.

MATCHLINE STA 190+00 - SEE SHEET 78

CONSTRUCTION NOTES:

(10) TELEPHONE RISERS AND/OR POLES TO BE REMOVED OR RELOCATED BY OTHERS, UNLESS OTHERWISE NOTED WITH (P) PROTECT. TELEPHONE CABLE TO BE ABANDONED. COORDINATE WORK WITH RON IMAI, US WEST, BY CALLING (360) 699–3546.

(19) LIMITS OF GRADING

(30) CONSTRUCT DRIVEWAY PER DETAIL AND "DRIVEWAY APPROACH SCHEDULE" TABLE ON SHEET 11.

(31) CONSTRUCT CONCRETE CURB AND GUTTER PER DETAIL SHEET 12.

(32) CONSTRUCT CONCRETE SIDEWALK PER DETAIL SHEET 14.

(33) CONSTRUCT CONCRETE CURB RAMP OF TYPE NOTED PER DETAIL SHEET 14.

(34) MATCH NEW CURB TO EXISTING CURB. CURB GRADES ARE BASED ON A 0.5' EXPOSURE. TRANSITION CURB EXPOSURE ON NEW CURB TO MATCH EXISTING CURB AT LEAST 3–FEET PRIOR TO MATCH POINT. IF NECESSARY, SAWCUT EXISTING CURB TO CREATE A CLEAN, UNDISTURBED EDGE.

(35) MATCH NEW SIDEWALK TO EXISTING SIDEWALK. TRANSITION NEW SIDEWALK WIDTH/LOCATION TO MATCH EXISTING WIDTH/LOCATION AT 5:1 PRIOR TO MATCH LINE. IF NECESSARY, SAWCUT EXISTING SIDEWALK TO CREATE A CLEAN, UNDISTURBED EDGE.

(36) CONSTRUCT 6'X6' A.C. LEVEL LANDING AND 6' TRANSITION RAMP FROM END OF SIDEWALK TO SHOULDER. 0.25' MIN CLASS 'A' A.C. OVER 0.4' CRUSHED ROCK.

(37) CONSTRUCT A.C. PAVEMENT RECONSTRUCTION/WIDENING. REFER TO TYPICAL SECTIONS ON SHEETS 8.

(38) CONSTRUCT A.C. OVERLAY. REFER TO TYPICAL SECTIONS ON SHEETS 8.

(39) RELOCATE (R), PROTECT (P), OR ADJUST (A) EXISTING TRAFFIC SIGNAL POLE, PER TRAFFIC SIGNAL PLANS, SHEETS 94 TO 99.

(40) CONSTRUCT EXTRUDED CURB PER CLARK COUNTY STD. DRAWING F18A.

(42) INSTALL FENCE AT LOCATIONS NOTED ON THE PLANS OR AS DIRECTED IN THE FIELD. SEE TYPICAL SECTION ON SHEET 12.

(43) INSTALL FENCE ON RETAINING WALL. SEE RETAINING WALL TABLES FOR DETAILS.

(44) CONSTRUCT RETAINING WALL PER PLAN AND PROFILE ON SHEET 42 TO 56. SEE TYPICAL DETAILS ON SHEETS 40 AND 41.

(54) CONSTRUCT STD. STORM MANHOLE, TYPE 1 WITH STANDARD MANHOLE RING AND COVER PER DETAIL SHEET 17.

(55) CONSTRUCT STD. OVERSIZED STORM MANHOLE, TYPE 2 WITH STANDARD MANHOLE RING AND COVER PER DETAIL SHEET 17.

(56) CONSTRUCT STD. FLAT TOP STORM MANHOLE, TYPE 3 WITH STANDARD MANHOLE RING AND COVER PER DETAIL SHEET 17

(57) CONSTRUCT PRIVATE CATCH BASIN PER DETAIL ON SHEET 19. INSTALL STORM PIPE AS SHOWN AND PER "STORM DRAINAGE DATA" INFORMATION TABLE THIS SHEET.

(58) CONSTRUCT TYPE 1 COMBINATION CURB INLET PER DETAIL ON SHEET 18. INSTALL STORM PIPE AS SHOWN AND PER "STORM DRAINAGE DATA" INFORMATION TABLE THIS SHEET.

(59) CONSTRUCT CATCH BASIN PER DETAIL ON SHEET 18.

(60) CONSTRUCT DITCH INLET PER DETAIL ON SHEET 19. INSTALL STORM PIPE AS SHOWN AND PER "STORM DRAINAGE DATA" INFORMATION TABLE THIS SHEET.

(61) INSTALL STORM PIPE.

(62) INSTALL TRENCH DRAIN AND STORM PIPE. SEE DETAILS ON SHEET 19.

(63) REMOVE EXISTING STORM SEWER PIPE AND/OR STRUCTURES. BACKFILL AND COMPACT VOID LEFT FROM EXISTING PIPE AS NECESSARY.

(64) EXISTING STORM PIPE AND/OR STRUCTURE TO REMAIN.

(65) PLUG AND ABANDON EXISTING STORM PIPE.

(66) ADJUST EXISTING MANHOLE CASTING WITH ADJUSTING RINGS/CATCH BASIN/VALVE BOX RIM TO FINISH GRADE.

(67) CONNECT TO EXISTING STORM PIPE OR STRUCTURE PER DETAIL ON SHEET 19.

(68) INSTALL STORM FILTER VAULT. SEE DETAIL SHEET 38.

(69) CONSTRUCT TYPE 1 CURB INLET PER DETAIL ON SHEET 18. INSTALL STORM PIPE AS SHOWN AND PER "STORM DRAINAGE DATA" INFORMATION TABLE THIS SHEET.

(73) CONSTRUCT ROADSIDE DITCH, GRADE TO DRAIN TO INLET.

(80) RELOCATE (R), PROTECT (P) ADJUST (A) EXISTING SANITARY SEWER CLEANOUT, WATER VALVE OR WATER METER BOX AND/OR SERVICE AS REQUIRED AND DIRECTED. ALL DISTURBED SERVICE LINES SHALL BE REPAIRED AS REQUIRED.

(81) EXISTING FIRE HYDRANT TO BE RELOCATED (R), PROTECTED (P), OR ADJUSTED (A). COORDINATE WITH CLARK PUBLIC UTILITIES.

(82) PROTECT EXISTING WATER LINE.

(90) RELOCATE (R), PROTECT (P), OR ADJUST (A) EXISTING IRRIGATION AS REQUIRED AND DIRECTED. ALL DISTURBED IRRIGATION SHALL BE REPAIRED AS REQUIRED.

(91) ADJUST EXISTING SANITARY OR STORM MANHOLE TO FINISH GRADE BY REMOVING CONE SECTION AND ADDITNG FULL MANHOLE SECTION.

(92) EXTEND EXISTING SEWER LATERAL TO PROPOSED R/W LINE AND INSTALL CLEANOUT.

(93) PROTECT OR REMOVE EXISTING SEPTIC SYSTEM AND INSTALL NEW SEWER SERVICE TO PROPERTY AS DIRECTED BY ENGINEER.

FOR INFORMATIONAL PURPOSES ONLY

ALL PLAN DETAIL AND INFORMATION IS NOT SHOWN ON THIS 90% COMPLETED SET OF PLANS.

90% SUBMITTAL - JULY 2004

DESIGNED:	TSH
DRAWN:	NPR/RAF
CRP:	330222
HOR.	1" = 20'
VERT.	1" = 5'
DATE:	7/2004
DWG:	
SHEET	77 OF 99

CALL 48 HOURS BEFORE YOU DIG
1–800–553–4344
"It's the Law"
NORTHWEST UTILITIES NOTIFICATION CENTER

Harper Houf Peterson Righellis Inc.
ENGINEERS • PLANNERS • SURVEYORS
1104 MAIN STREET, SUITE 100, VANCOUVER, WA 98660
TEL 360.750.1131 www.hhpr.com FAX 360.750.1141

DESIGN & ENGINEERING DIVISION

NE 88TH STREET
STA 185+50 TO STA 190+00

proud past, promising future
CLARK COUNTY WASHINGTON

P:\Clrk-12 NE 88th\CRK12-DWGS\ Clrk12-RDEAST2.DWG

MATCHLINE STA 190+00 - SEE SHEET 77

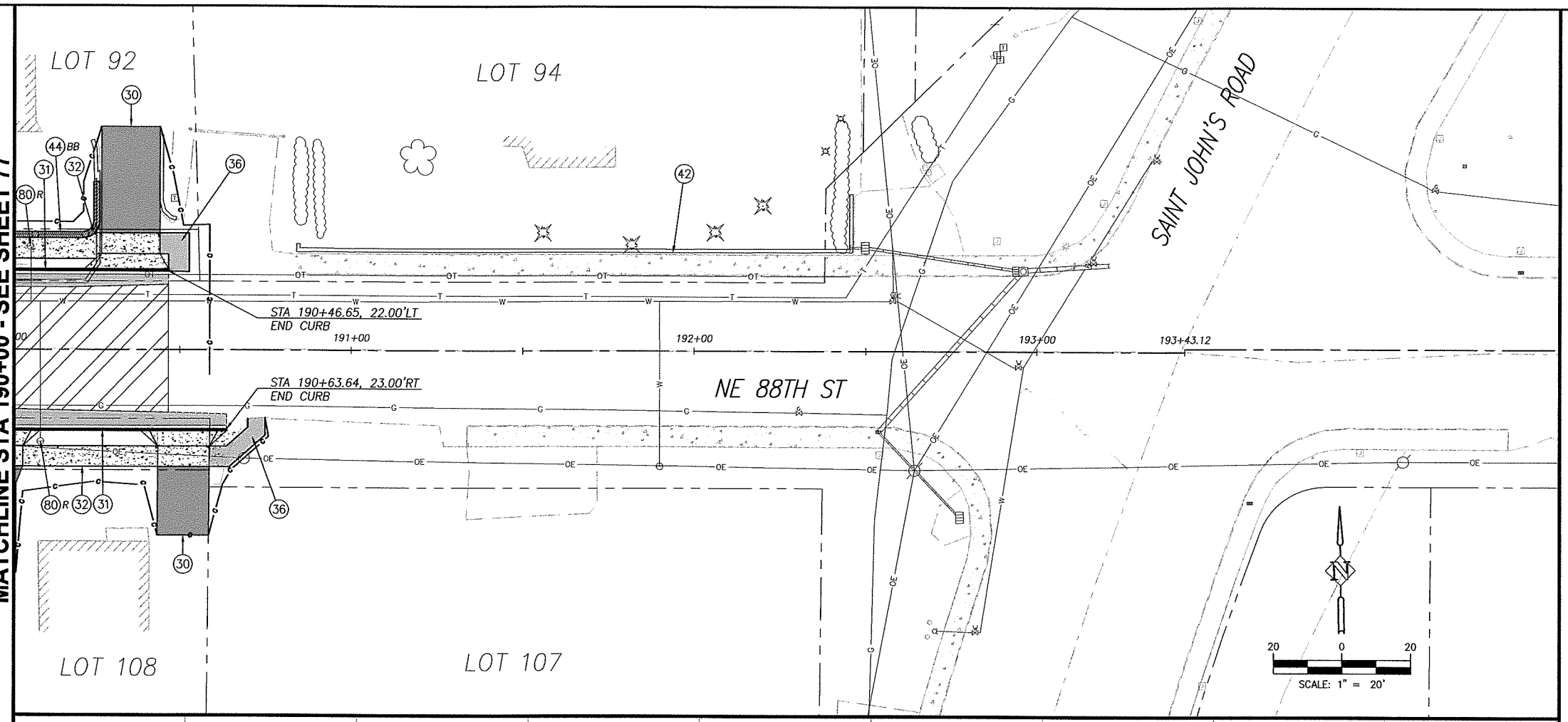

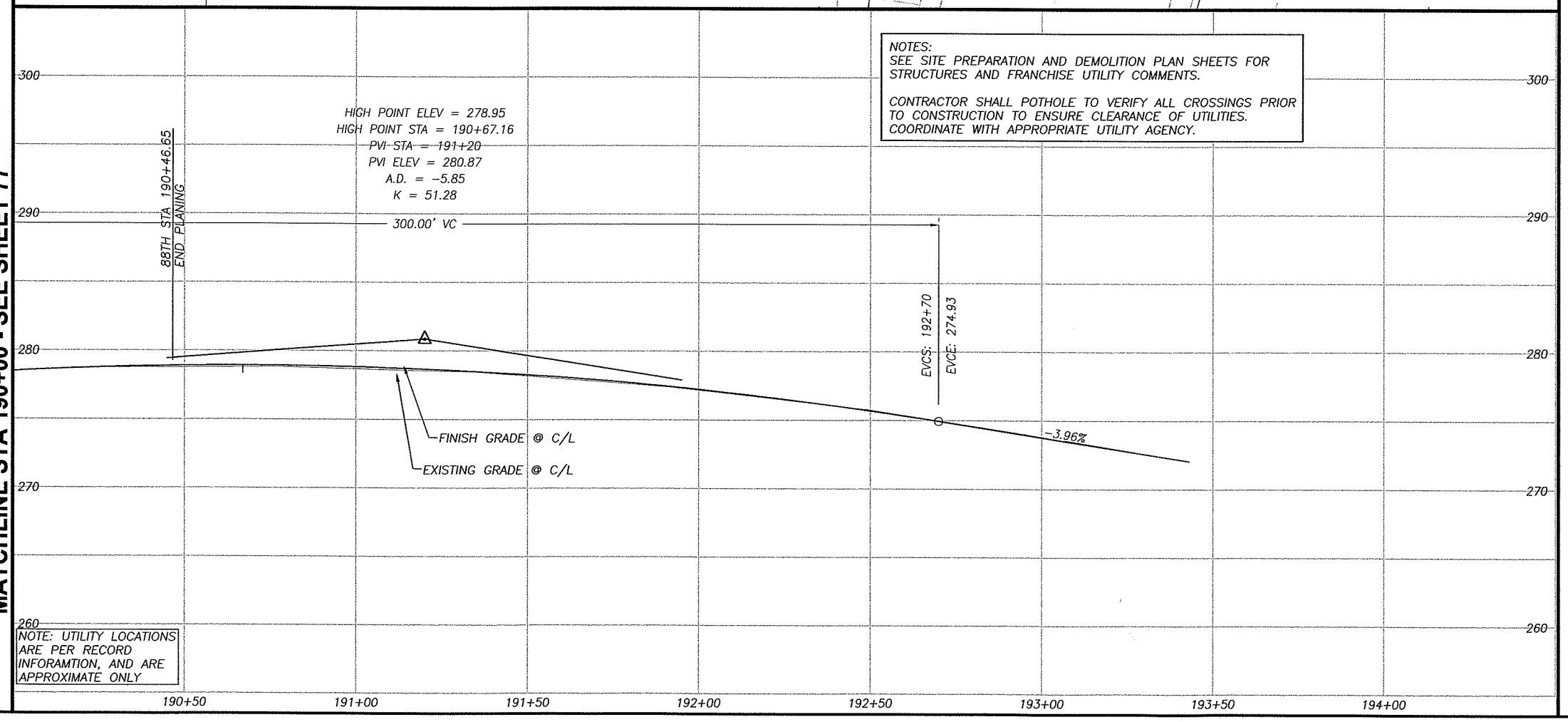

NOTES:
SEE SITE PREPARATION AND DEMOLITION PLAN SHEETS FOR STRUCTURES AND FRANCHISE UTILITY COMMENTS.

CONTRACTOR SHALL POTHOLE TO VERIFY ALL CROSSINGS PRIOR TO CONSTRUCTION TO ENSURE CLEARANCE OF UTILITIES. COORDINATE WITH APPROPRIATE UTILITY AGENCY.

NOTE: UTILITY LOCATIONS ARE PER RECORD INFORAMTION, AND ARE APPROXIMATE ONLY

P:\Clrk-12 INE 88th\ICRK12-DWGS\Crk12RDEAST2.DWG

CONSTRUCTION NOTES:

(10) TELEPHONE RISERS AND/OR POLES TO BE REMOVED OR RELOCATED BY OTHERS, UNLESS OTHERWISE NOTED WITH (P) PROTECT. TELEPHONE CABLE TO BE ABANDONED. COORDINATE WORK WITH RON IMAI, US WEST, BY CALLING (360) 699-3546.

(19) LIMITS OF GRADING

(30) CONSTRUCT DRIVEWAY PER DETAIL AND "DRIVEWAY APPROACH SCHEDULE" TABLE ON SHEET 11.

(31) CONSTRUCT CONCRETE CURB AND GUTTER PER DETAIL SHEET 12.

(32) CONSTRUCT CONCRETE SIDEWALK PER DETAIL SHEET 14.

(33) CONSTRUCT CONCRETE CURB RAMP OF TYPE NOTED PER DETAIL SHEET 14.

(34) MATCH NEW CURB TO EXISTING CURB. CURB GRADES ARE BASED ON A 0.5' EXPOSURE. TRANSITION CURB EXPOSURE ON NEW CURB TO MATCH EXISTING CURB AT LEAST 3-FEET PRIOR TO MATCH POINT. IF NECESSARY, SAWCUT EXISTING CURB TO CREATE A CLEAN, UNDISTURBED EDGE.

(35) MATCH NEW SIDEWALK TO EXISTING SIDEWALK. TRANSITION NEW SIDEWALK WIDTH/LOCATION TO MATCH EXISTING WIDTH/LOCATION AT 5:1 PRIOR TO MATCH LINE. IF NECESSARY, SAWCUT EXISTING SIDEWALK TO CREATE A CLEAN, UNDISTURBED EDGE.

(36) CONSTRUCT 6'X6' A.C. LEVEL LANDING AND 6' TRANSITION RAMP FROM END OF SIDEWALK TO SHOULDER. 0.25' MIN CLASS 'A' A.C. OVER 0.4' CRUSHED ROCK.

(37) CONSTRUCT A.C. PAVEMENT RECONSTRUCTION/WIDENING. REFER TO TYPICAL SECTIONS ON SHEETS 8.

(38) CONSTRUCT A.C. OVERLAY. REFER TO TYPICAL SECTIONS ON SHEETS 8.

(39) RELOCATE (R), PROTECT (P), OR ADJUST (A) EXISTING TRAFFIC SIGNAL POLE, PER TRAFFIC SIGNAL PLANS, SHEETS 94 TO 99.

(40) CONSTRUCT EXTRUDED CURB PER CLARK COUNTY STD. DRAWING F18A.

(42) INSTALL FENCE AT LOCATIONS NOTED ON THE PLANS OR AS DIRECTED IN THE FIELD. SEE TYPICAL SECTION ON SHEET 12.

(43) INSTALL FENCE ON RETAINING WALL. SEE RETAINING WALL TABLES FOR DETAILS.

(44) CONSTRUCT RETAINING WALL PER PLAN AND PROFILE ON SHEET 42 TO 56. SEE TYPICAL DETAILS ON SHEETS 40 AND 41.

(54) CONSTRUCT STD. STORM MANHOLE, TYPE 1 WITH STANDARD MANHOLE RING AND COVER PER DETAIL SHEET 17.

(55) CONSTRUCT STD. OVERSIZED STORM MANHOLE, TYPE 2 WITH STANDARD MANHOLE RING AND COVER PER DETAIL SHEET 17.

(56) CONSTRUCT STD. FLAT TOP STORM MANHOLE, TYPE 3 WITH STANDARD MANHOLE RING AND COVER PER DETAIL SHEET 17

(57) CONSTRUCT PRIVATE CATCH BASIN PER DETAIL ON SHEET 19. INSTALL STORM PIPE AS SHOWN AND PER "STORM DRAINAGE DATA" INFORMATION TABLE THIS SHEET.

(58) CONSTRUCT TYPE 1 COMBINATION CURB INLET PER DETAIL ON SHEET 18. INSTALL STORM PIPE AS SHOWN AND PER "STORM DRAINAGE DATA" INFORMATION TABLE THIS SHEET.

(59) CONSTRUCT CATCH BASIN PER DETAIL ON SHEET 18.

(60) CONSTRUCT DITCH INLET PER DETAIL ON SHEET 19. INSTALL STORM PIPE AS SHOWN AND PER "STORM DRAINAGE DATA" INFORMATION TABLE THIS SHEET.

(61) INSTALL STORM PIPE.

(62) INSTALL TRENCH DRAIN AND STORM PIPE. SEE DETAILS ON SHEET 19.

(63) REMOVE EXISTING STORM SEWER PIPE AND/OR STRUCTURES. BACKFILL AND COMPACT VOID LEFT FROM EXISTING PIPE AS NECESSARY.

(64) EXISTING STORM PIPE AND/OR STRUCTURE TO REMAIN.

(65) PLUG AND ABANDON EXISTING STORM PIPE.

(66) ADJUST EXISTING MANHOLE CASTING WITH ADJUSTING RINGS/CATCH BASIN/VALVE BOX RIM TO FINISH GRADE.

(67) CONNECT TO EXISTING STORM PIPE OR STRUCTURE PER DETAIL ON SHEET 19.

(68) INSTALL STORM FILTER VAULT. SEE DETAIL SHEET 38.

(69) CONSTRUCT TYPE 1 CURB INLET PER DETAIL ON SHEET 18. INSTALL STORM PIPE AS SHOWN AND PER "STORM DRAINAGE DATA" INFORMATION TABLE THIS SHEET.

(73) CONSTRUCT ROADSIDE DITCH, GRADE TO DRAIN TO INLET.

(80) RELOCATE (R), PROTECT (P) ADJUST (A) EXISTING SANITARY SEWER CLEANOUT, WATER VALVE OR WATER METER BOX AND/OR SERVICE AS REQUIRED AND DIRECTED. ALL DISTURBED SERVICE LINES SHALL BE REPAIRED AS REQUIRED.

(81) EXISTING FIRE HYDRANT TO BE RELOCATED (R), PROTECTED (P), OR ADJUSTED (A). COORDINATE WITH CLARK PUBLIC UTILITIES.

(82) PROTECT EXISTING WATER LINE.

(90) RELOCATE (R), PROTECT (P), OR ADJUST (A) EXISTING IRRIGATION AS REQUIRED AND DIRECTED. ALL DISTURBED IRRIGATION SHALL BE REPAIRED AS REQUIRED.

(91) ADJUST EXISTING SANITARY OR STORM MANHOLE TO FINISH GRADE BY REMOVING CONE SECTION AND ADDITNG FULL MANHOLE SECTION.

(92) EXTEND EXISTING SEWER LATERAL TO PROPOSED R/W LINE AND INSTALL CLEANOUT.

(93) PROTECT OR REMOVE EXISTING SEPTIC SYSTEM AND INSTALL NEW SEWER SERVICE TO PROPERTY AS DIRECTED BY ENGINEER.

FOR INFORMATIONAL PURPOSES ONLY

ALL PLAN DETAIL AND INFORMATION IS NOT SHOWN ON THIS 90% COMPLETED SET OF PLANS.

90% SUBMITTAL - JULY 2004

DESIGNED:	TSH
DRAWN:	NPR/RAF
CRP:	330222
HOR.:	1" = 20'
VERT.:	N/A
DATE:	7/2004
DWG:	
SHEET	78 OF 99

CALL 48 HOURS BEFORE YOU DIG 1-800-553-4344 "It's the Law" NORTHWEST UTILITIES NOTIFICATION CENTER

Harper Houf Peterson Righellis Inc.
ENGINEERS • PLANNERS • SURVEYORS
1104 MAIN STREET, SUITE 100, VANCOUVER, WA 98660
TEL 360.750.1131 www.hhpr.com FAX 360.750.1141

DESIGN & ENGINEERING DIVISION

NE 88TH STREET
STA 190+00 TO 190+46.65

proud past, promising future

CLARK COUNTY WASHINGTON

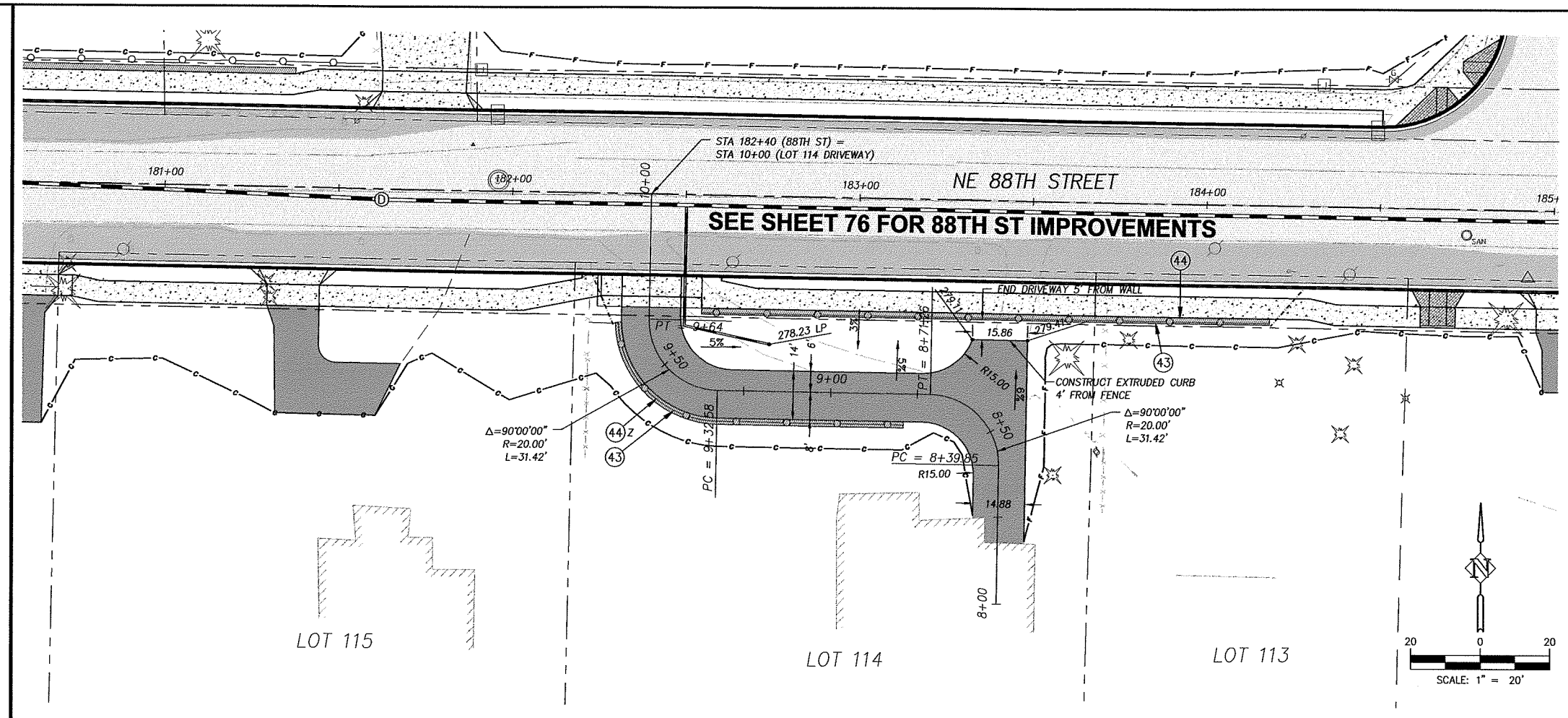

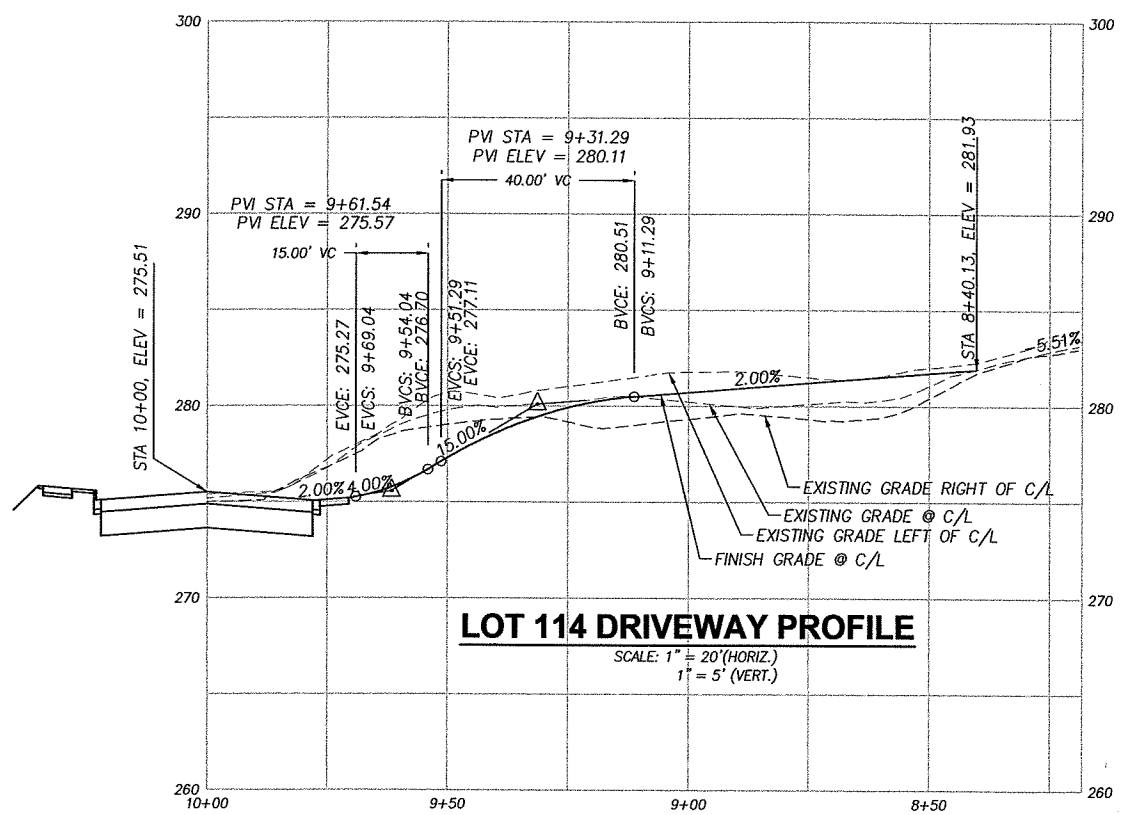

LOT 114 DRIVEWAY PROFILE

SCALE: 1" = 20'(HORIZ.)
1" = 5' (VERT.)

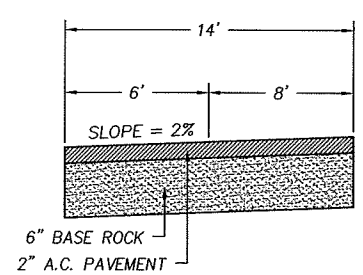

LOT 114 DRIVEWAY TYPICAL SECTION

N.T.S.

CONSTRUCTION NOTES:

(10) TELEPHONE RISERS AND/OR POLES TO BE REMOVED OR RELOCATED BY OTHERS, UNLESS OTHERWISE NOTED WITH (P) PROTECT. TELEPHONE CABLE TO BE ABANDONED. COORDINATE WORK WITH RON IMAI, US WEST, BY CALLING (360) 699-3546.

(19) LIMITS OF GRADING

(30) CONSTRUCT DRIVEWAY PER DETAIL AND "DRIVEWAY APPROACH SCHEDULE" TABLE ON SHEET 11.

(31) CONSTRUCT CONCRETE CURB AND GUTTER PER DETAIL SHEET 12.

(32) CONSTRUCT CONCRETE SIDEWALK PER DETAIL SHEET 14.

(33) CONSTRUCT CONCRETE CURB RAMP OF TYPE NOTED PER DETAIL SHEET 14.

(34) MATCH NEW CURB TO EXISTING CURB. CURB GRADES ARE BASED ON A 0.5' EXPOSURE. TRANSITION CURB EXPOSURE ON NEW CURB TO MATCH EXISTING CURB AT LEAST 3-FEET PRIOR TO MATCH POINT. IF NECESSARY, SAWCUT EXISTING CURB TO CREATE A CLEAN, UNDISTURBED EDGE.

(35) MATCH NEW SIDEWALK TO EXISTING SIDEWALK. TRANSITION NEW SIDEWALK WIDTH/LOCATION TO MATCH EXISTING WIDTH/LOCATION AT 5:1 PRIOR TO MATCH LINE. IF NECESSARY, SAWCUT EXISTING SIDEWALK TO CREATE A CLEAN, UNDISTURBED EDGE.

(36) CONSTRUCT 6'X6' A.C. LEVEL LANDING AND 6' TRANSITION RAMP FROM END OF SIDEWALK TO SHOULDER. 0.25' MIN CLASS 'A' A.C. OVER 0.4' CRUSHED ROCK.

(37) CONSTRUCT A.C. PAVEMENT RECONSTRUCTION/WIDENING. REFER TO TYPICAL SECTIONS ON SHEETS 8.

(38) CONSTRUCT A.C. OVERLAY. REFER TO TYPICAL SECTIONS ON SHEETS 8.

(39) RELOCATE (R), PROTECT (P), OR ADJUST (A) EXISTING TRAFFIC SIGNAL POLE, PER TRAFFIC SIGNAL PLANS, SHEETS 94 TO 99.

(40) CONSTRUCT EXTRUDED CURB PER CLARK COUNTY STD. DRAWING F18A.

(42) INSTALL FENCE AT LOCATIONS NOTED ON THE PLANS OR AS DIRECTED IN THE FIELD. SEE TYPICAL SECTION ON SHEET 12.

(43) INSTALL FENCE ON RETAINING WALL. SEE RETAINING WALL TABLES FOR DETAILS.

(44) CONSTRUCT RETAINING WALL PER PLAN AND PROFILE ON SHEET 42 TO 56. SEE TYPICAL DETAILS ON SHEETS 40 AND 41.

(54) CONSTRUCT STD. STORM MANHOLE, TYPE 1 WITH STANDARD MANHOLE RING AND COVER PER DETAIL SHEET 17.

(55) CONSTRUCT STD. OVERSIZED STORM MANHOLE, TYPE 2 WITH STANDARD MANHOLE RING AND COVER PER DETAIL SHEET 17.

(56) CONSTRUCT STD. FLAT TOP STORM MANHOLE, TYPE 3 WITH STANDARD MANHOLE RING AND COVER PER DETAIL SHEET 17

(57) CONSTRUCT PRIVATE CATCH BASIN PER DETAIL ON SHEET 19. INSTALL STORM PIPE AS SHOWN AND PER "STORM DRAINAGE DATA" INFORMATION TABLE THIS SHEET.

(58) CONSTRUCT TYPE 1 COMBINATION CURB INLET PER DETAIL ON SHEET 18. INSTALL STORM PIPE AS SHOWN AND PER "STORM DRAINAGE DATA" INFORMATION TABLE THIS SHEET.

(59) CONSTRUCT CATCH BASIN PER DETAIL ON SHEET 18.

(60) CONSTRUCT DITCH INLET PER DETAIL ON SHEET 19. INSTALL STORM PIPE AS SHOWN AND PER "STORM DRAINAGE DATA" INFORMATION TABLE THIS SHEET.

(61) INSTALL STORM PIPE.

(62) INSTALL TRENCH DRAIN AND STORM PIPE. SEE DETAILS ON SHEET 19.

(63) REMOVE EXISTING STORM SEWER PIPE AND/OR STRUCTURES. BACKFILL AND COMPACT VOID LEFT FROM EXISTING PIPE AS NECESSARY.

(64) EXISTING STORM PIPE AND/OR STRUCTURE TO REMAIN.

(65) PLUG AND ABANDON EXISTING STORM PIPE.

(66) ADJUST EXISTING MANHOLE CASTING WITH ADJUSTING RINGS/CATCH BASIN/VALVE BOX RIM TO FINISH GRADE.

(67) CONNECT TO EXISTING STORM PIPE OR STRUCTURE PER DETAIL ON SHEET 19.

(68) INSTALL STORM FILTER VAULT. SEE DETAIL SHEET 38.

(69) CONSTRUCT TYPE 1 CURB INLET PER DETAIL ON SHEET 18. INSTALL STORM PIPE AS SHOWN AND PER "STORM DRAINAGE DATA" INFORMATION TABLE THIS SHEET.

(73) CONSTRUCT ROADSIDE DITCH, GRADE TO DRAIN TO INLET.

(80) RELOCATE (R), PROTECT (P) ADJUST (A) EXISTING SANITARY SEWER CLEANOUT, WATER VALVE OR WATER METER BOX AND/OR SERVICE AS REQUIRED AND DIRECTED. ALL DISTURBED SERVICE LINES SHALL BE REPAIRED AS REQUIRED.

(81) EXISTING FIRE HYDRANT TO BE RELOCATED (R), PROTECTED (P), OR ADJUSTED (A). COORDINATE WITH CLARK PUBLIC UTILITIES.

(82) PROTECT EXISTING WATER LINE.

(90) RELOCATE (R), PROTECT (P), OR ADJUST (A) EXISTING IRRIGATION AS REQUIRED AND DIRECTED. ALL DISTURBED IRRIGATION SHALL BE REPAIRED AS REQUIRED.

(91) ADJUST EXISTING SANITARY OR STORM MANHOLE TO FINISH GRADE BY REMOVING CONE SECTION AND ADDITNG FULL MANHOLE SECTION.

(92) EXTEND EXISTING SEWER LATERAL TO PROPOSED R/W LINE AND INSTALL CLEANOUT.

(93) PROTECT OR REMOVE EXISTING SEPTIC SYSTEM AND INSTALL NEW SEWER SERVICE TO PROPERTY AS DIRECTED BY ENGINEER.

FOR INFORMATIONAL PURPOSES ONLY

ALL PLAN DETAIL AND INFORMATION IS NOT SHOWN ON THIS 90% COMPLETED SET OF PLANS.

90% SUBMITTAL - JULY 2004

DESIGNED:	JLB
DRAWN:	JLB
CRP:	330222
HOR.	1"=20'
VERT.	N/A
DATE:	11/20003
DWG:	
SHEET	79 OF 99

CALL 48 HOURS BEFORE YOU DIG 1-800-553-4344 "It's the Law" NORTHWEST UTILITIES NOTIFICATION CENTER

Harper Houf Peterson Righellis Inc.
ENGINEERS, LAND SURVEYORS
1104 MAIN STREET, SUITE 100, VANCOUVER, WA 98660
TEL 360.750.1131 www.hhpriwll.com FAX 360.750.1141

DESIGN & ENGINEERING DIVISION

NE 88TH STREET
DRIVEWAY PLAN & PROFILE
LOT 114

proud past, promising future

CLARK COUNTY WASHINGTON

P:\Crk-12 (NE 88th)\CRK12-DWGS\ CRK12-DWY114&206.dwg

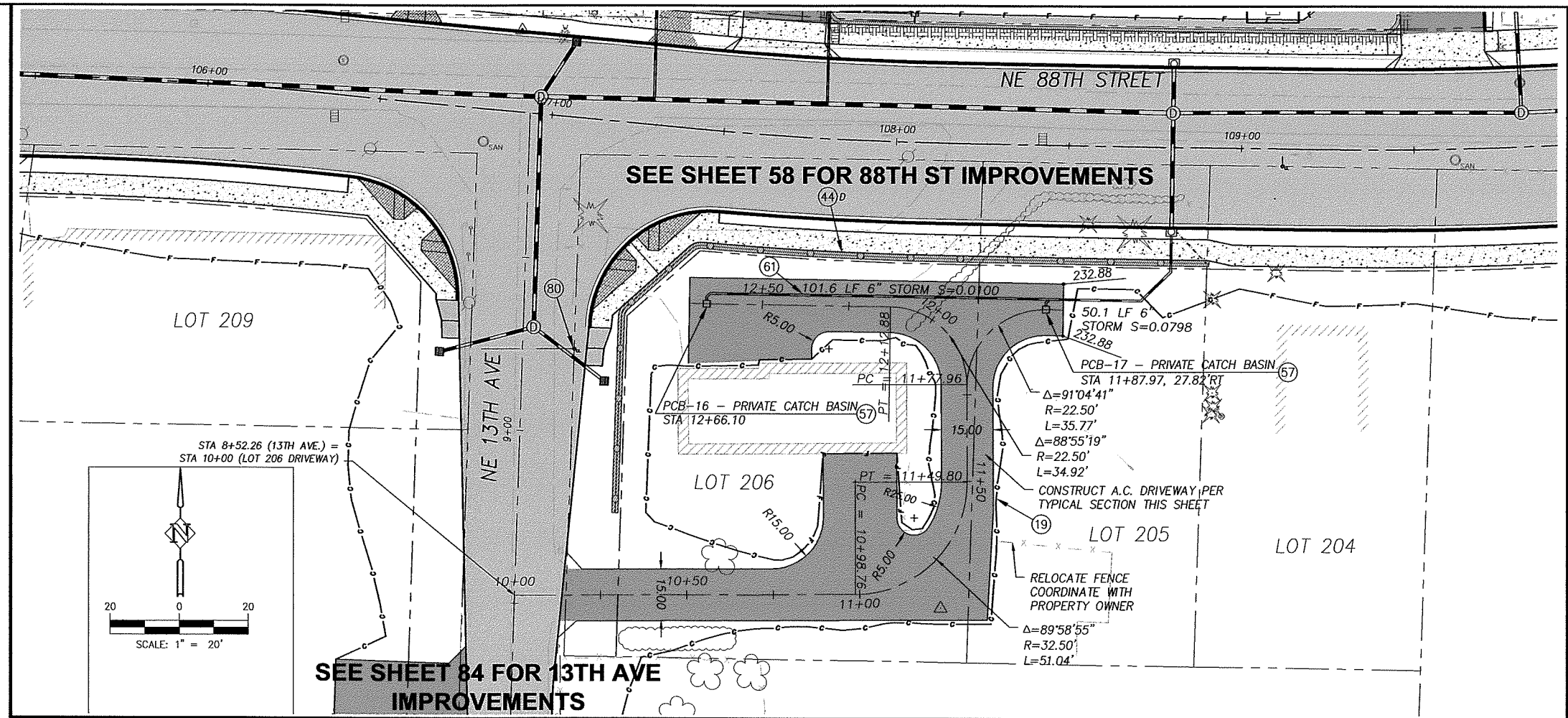

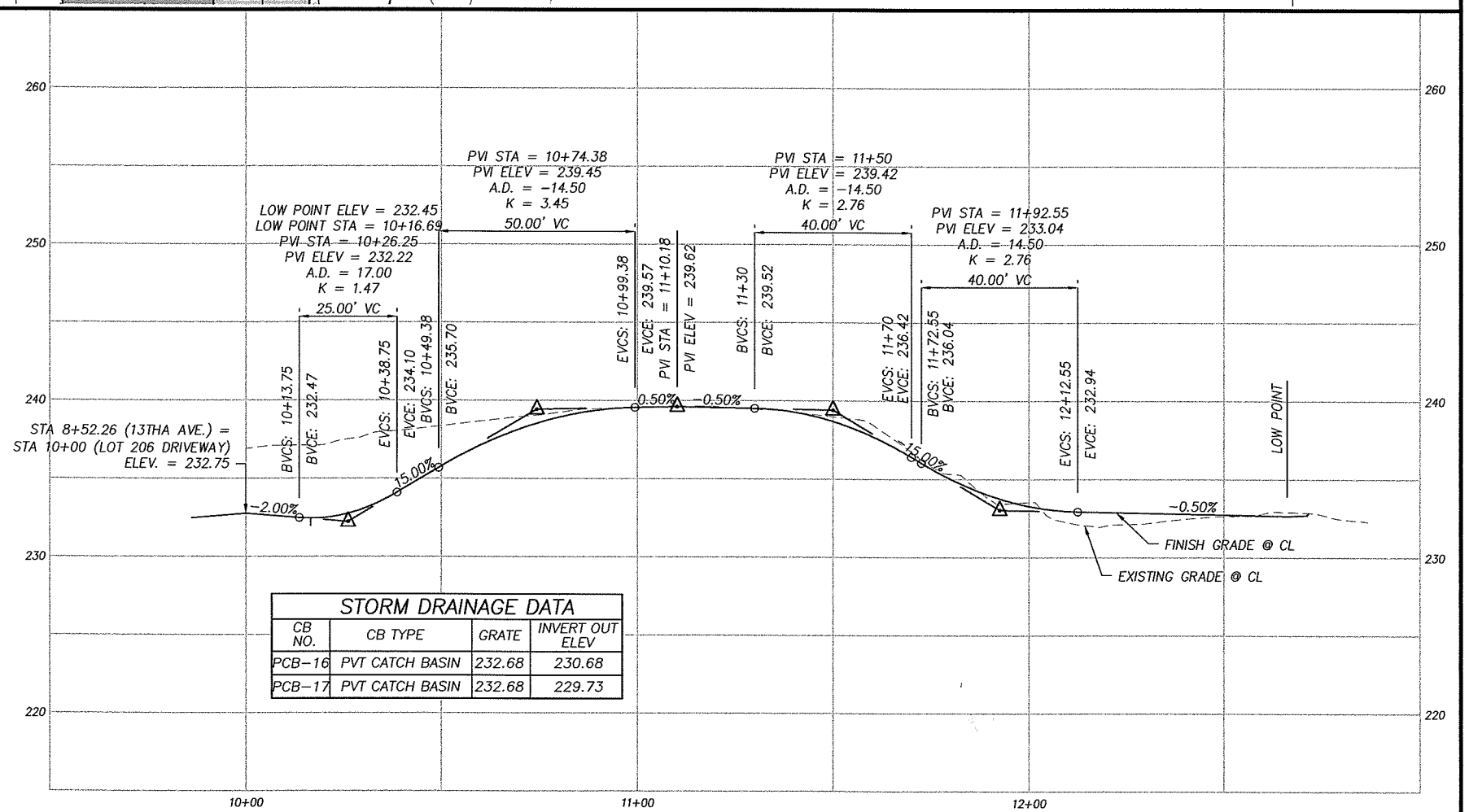

STORM DRAINAGE DATA			
CB NO.	CB TYPE	GRATE	INVERT OUT ELEV
PCB-16	PVT CATCH BASIN	232.68	230.68
PCB-17	PVT CATCH BASIN	232.68	229.73

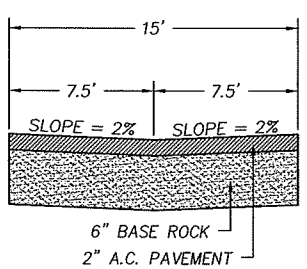

LOT 206 DRIVEWAY TYPICAL SECTION

N.T.S.

CONSTRUCTION NOTES:

(10) TELEPHONE RISERS AND/OR POLES TO BE REMOVED OR RELOCATED BY OTHERS, UNLESS OTHERWISE NOTED WITH (P) PROTECT. TELEPHONE CABLE TO BE ABANDONED. COORDINATE WORK WITH RON IMAI, US WEST, BY CALLING (360) 699-3546.

(19) LIMITS OF GRADING

(30) CONSTRUCT DRIVEWAY PER DETAIL AND "DRIVEWAY APPROACH SCHEDULE" TABLE ON SHEET 11.

(31) CONSTRUCT CONCRETE CURB AND GUTTER PER DETAIL SHEET 12.

(32) CONSTRUCT CONCRETE SIDEWALK PER DETAIL SHEET 14.

(33) CONSTRUCT CONCRETE CURB RAMP OF TYPE NOTED PER DETAIL SHEET 14.

(34) MATCH NEW CURB TO EXISTING CURB. CURB GRADES ARE BASED ON A 0.5' EXPOSURE. TRANSITION CURB EXPOSURE ON NEW CURB TO MATCH EXISTING CURB AT LEAST 3-FEET PRIOR TO MATCH POINT. IF NECESSARY, SAWCUT EXISTING CURB TO CREATE A CLEAN, UNDISTURBED EDGE.

(35) MATCH NEW SIDEWALK TO EXISTING SIDEWALK. TRANSITION NEW SIDEWALK WIDTH/LOCATION TO MATCH EXISTING WIDTH/LOCATION AT 5:1 PRIOR TO MATCH LINE. IF NECESSARY, SAWCUT EXISTING SIDEWALK TO CREATE A CLEAN, UNDISTURBED EDGE.

(36) CONSTRUCT 6'X6' A.C. LEVEL LANDING AND 6' TRANSITION RAMP FROM END OF SIDEWALK TO SHOULDER. 0.25' MIN CLASS 'A' A.C. OVER 0.4' CRUSHED ROCK.

(37) CONSTRUCT A.C. PAVEMENT RECONSTRUCTION/WIDENING. REFER TO TYPICAL SECTIONS ON SHEETS 8.

(38) CONSTRUCT A.C. OVERLAY. REFER TO TYPICAL SECTIONS ON SHEETS 8.

(39) RELOCATE (R), PROTECT (P), OR ADJUST (A) EXISTING TRAFFIC SIGNAL POLE, PER TRAFFIC SIGNAL PLANS, SHEETS 94 TO 99.

(40) CONSTRUCT EXTRUDED CURB PER CLARK COUNTY STD. DRAWING F18A.

(42) INSTALL FENCE AT LOCATIONS NOTED ON THE PLANS OR AS DIRECTED IN THE FIELD. SEE TYPICAL SECTION ON SHEET 12.

(43) INSTALL FENCE ON RETAINING WALL. SEE RETAINING WALL TABLES FOR DETAILS.

(44) CONSTRUCT RETAINING WALL PER PLAN AND PROFILE ON SHEET 42 TO 56. SEE TYPICAL DETAILS ON SHEETS 40 AND 41.

(54) CONSTRUCT STD. STORM MANHOLE, TYPE 1 WITH STANDARD MANHOLE RING AND COVER PER DETAIL SHEET 17.

(55) CONSTRUCT STD. OVERSIZED STORM MANHOLE, TYPE 2 WITH STANDARD MANHOLE RING AND COVER PER DETAIL SHEET 17.

(56) CONSTRUCT STD. FLAT TOP STORM MANHOLE, TYPE 3 WITH STANDARD MANHOLE RING AND COVER PER DETAIL SHEET 17

(57) CONSTRUCT PRIVATE CATCH BASIN PER DETAIL ON SHEET 19. INSTALL STORM PIPE AS SHOWN AND PER "STORM DRAINAGE DATA" INFORMATION TABLE THIS SHEET.

(58) CONSTRUCT TYPE 1 COMBINATION CURB INLET PER DETAIL ON SHEET 18. INSTALL STORM PIPE AS SHOWN AND PER "STORM DRAINAGE DATA" INFORMATION TABLE THIS SHEET.

(59) CONSTRUCT CATCH BASIN PER DETAIL ON SHEET 18.

(60) CONSTRUCT DITCH INLET PER DETAIL ON SHEET 19. INSTALL STORM PIPE AS SHOWN AND PER "STORM DRAINAGE DATA" INFORMATION TABLE THIS SHEET.

(61) INSTALL STORM PIPE.

(62) INSTALL TRENCH DRAIN AND STORM PIPE. SEE DETAILS ON SHEET 19.

(63) REMOVE EXISTING STORM SEWER PIPE AND/OR STRUCTURES. BACKFILL AND COMPACT VOID LEFT FROM EXISTING PIPE AS NECESSARY.

(64) EXISTING STORM PIPE AND/OR STRUCTURE TO REMAIN.

(65) PLUG AND ABANDON EXISTING STORM PIPE.

(66) ADJUST EXISTING MANHOLE CASTING WITH ADJUSTING RINGS/CATCH BASIN/VALVE BOX RIM TO FINISH GRADE.

(67) CONNECT TO EXISTING STORM PIPE OR STRUCTURE PER DETAIL ON SHEET 19.

(68) INSTALL STORM FILTER VAULT. SEE DETAIL SHEET 38.

(69) CONSTRUCT TYPE 1 CURB INLET PER DETAIL ON SHEET 18. INSTALL STORM PIPE AS SHOWN AND PER "STORM DRAINAGE DATA" INFORMATION TABLE THIS SHEET.

(73) CONSTRUCT ROADSIDE DITCH, GRADE TO DRAIN TO INLET.

(80) RELOCATE (R), PROTECT (P) ADJUST (A) EXISTING SANITARY SEWER CLEANOUT, WATER VALVE OR WATER METER BOX AND/OR SERVICE AS REQUIRED AND DIRECTED. ALL DISTURBED SERVICE LINES SHALL BE REPAIRED AS REQUIRED.

(81) EXISTING FIRE HYDRANT TO BE RELOCATED (R), PROTECTED (P), OR ADJUSTED (A). COORDINATE WITH CLARK PUBLIC UTILITIES.

(82) PROTECT EXISTING WATER LINE.

(90) RELOCATE (R), PROTECT (P), OR ADJUST (A) EXISTING IRRIGATION AS REQUIRED AND DIRECTED. ALL DISTURBED IRRIGATION SHALL BE REPAIRED AS REQUIRED.

(91) ADJUST EXISTING SANITARY OR STORM MANHOLE TO FINISH GRADE BY REMOVING CONE SECTION AND ADDITNG FULL MANHOLE SECTION.

(92) EXTEND EXISTING SEWER LATERAL TO PROPOSED R/W LINE AND INSTALL CLEANOUT.

(93) PROTECT OR REMOVE EXISTING SEPTIC SYSTEM AND INSTALL NEW SEWER SERVICE TO PROPERTY AS DIRECTED BY ENGINEER.

FOR INFORMATIONAL PURPOSES ONLY

ALL PLAN DETAIL AND INFORMATION IS NOT SHOWN ON THIS 90% COMPLETED SET OF PLANS.

90% SUBMITTAL - JULY 2004

DESIGNED:	JLB
DRAWN:	JLB
CRP:	330222
HOR.	1"=20'
VERT.	N/A
DATE:	11/20003
DWG:	
SHEET 80 OF 99	

CALL 48 HOURS BEFORE YOU DIG 1-800-553-4344 "It's the Law" NORTHWEST UTILITIES NOTIFICATION CENTER

Harper Houf Peterson Righellis Inc.
ENGINEERS • PLANNERS
1104 MAIN STREET, SUITE 100, VANCOUVER, WA 98660
TEL 360.750.1131 www.hrcivil.com FAX 360.750.1141

DESIGN & ENGINEERING DIVISION

NE 88TH STREET
DRIVEWAY PLAN & PROFILE
LOTS 205 & 206

proud past, promising future

CLARK COUNTY WASHINGTON

P:\Clrk-12 NE 88th\CRK12-DWGS\CRK12-DWY114&206.dwg

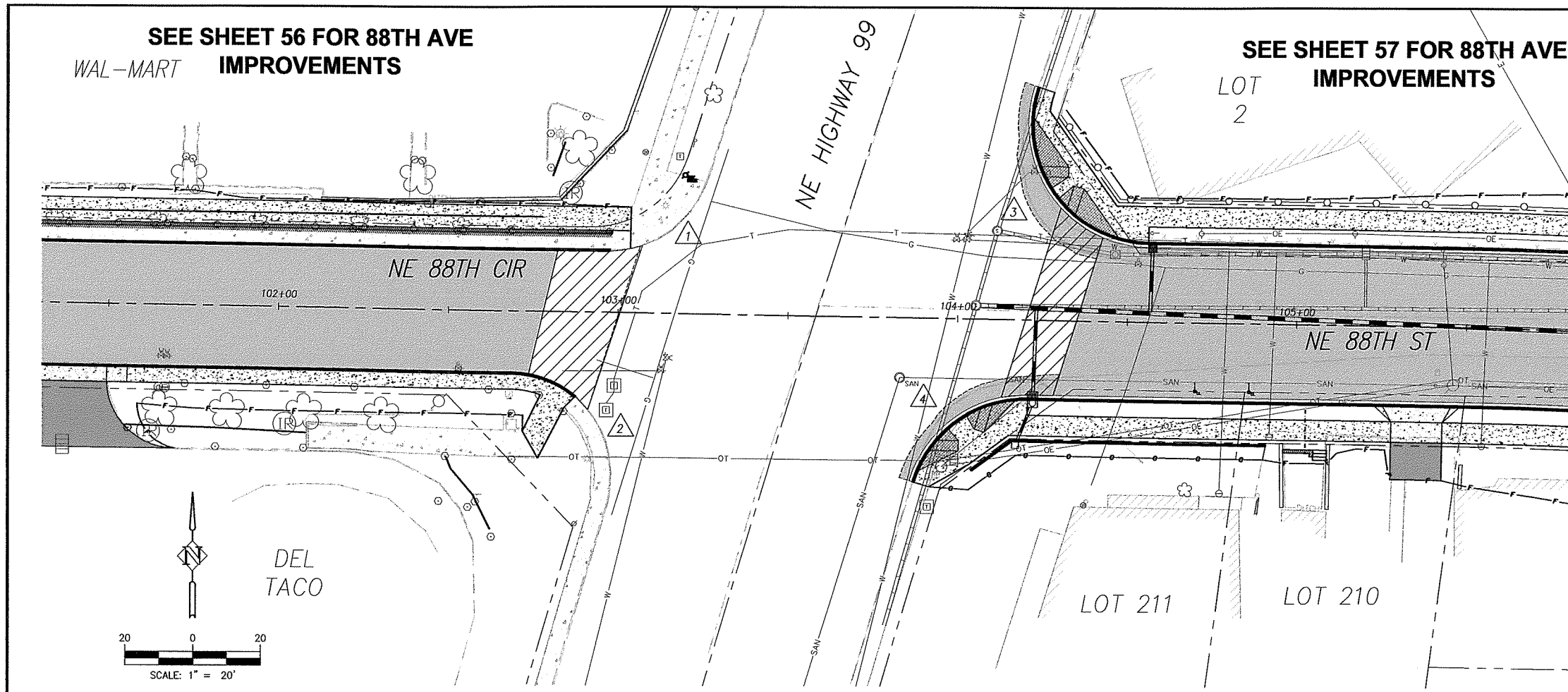

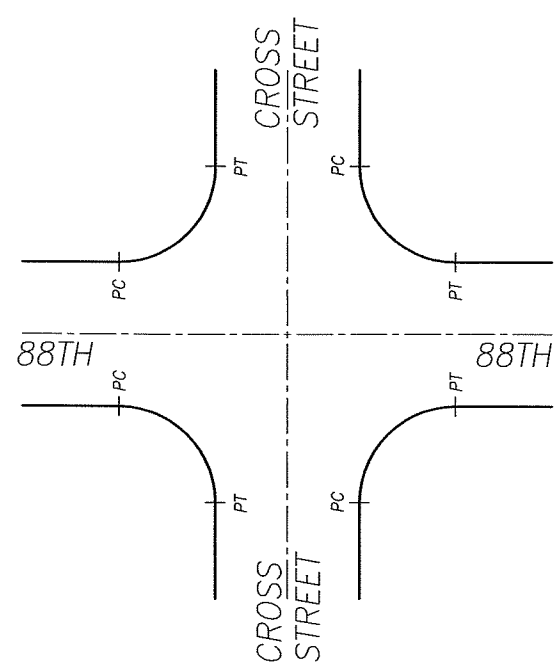

CURB RETURN, PC/PT LOCATIONS -TYPICAL

N.T.S.

CURB RETURN TABLES		
1	DESCRIPTION	FL ELEV
	PC XX+XX.XX, 23.00' RT	XXX.XX
	1/4 Δ	XXX.XX
Δ = XX°XX'XX"	1/2 Δ	XXX.XX
R = 35.00'	3/4 Δ	XXX.XX
L = XX.XX'	PT XX+XX.XX, 23.00' RT	XXX.XX
2	DESCRIPTION	FL ELEV
	PC XX+XX.XX, 23.00' LT	XXX.XX
	1/4 Δ	XXX.XX
Δ = XXX°XX'XX"	1/2 Δ	XXX.XX
R = 35.00'	3/4 Δ	XXX.XX
L = XX.XX'	PT XX+XX.XX, 23.00' RT	XXX.XX
3	DESCRIPTION	FL ELEV
	PC 27+99.36, 41.50' RT	XXX.XX
	1/4 Δ	XXX.XX
Δ = 107°35'27"	1/2 Δ	XXX.XX
R = 35.00'	3/4 Δ	XXX.XX
L = 65.72'	PT 104+55.93, 23.00' LT	XXX.XX
4	DESCRIPTION	FL ELEV
	PC 26+76.53, 41.64' RT	XXX.XX
	1/4 Δ	XXX.XX
Δ = 73°41'27"	1/2 Δ	XXX.XX
R = 35.00'	3/4 Δ	XXX.XX
L = 45.02'	PT 104+20.95, 23.00' RT	XXX.XX

*MATCH EXISTING FL ELEV
SEE SHEET X FOR CURB RAMP STAKING DATA

CONSTRUCTION NOTES:

NOTES:
SEE SITE PREPARATION AND DEMOLITION PLAN SHEETS FOR STRUCTURES AND FRANCHISE UTILITY COMMENTS.

CONTRACTOR SHALL POTHOLE TO VERIFY ALL CROSSINGS PRIOR TO CONSTRUCTION TO ENSURE CLEARANCE OF UTILITIES. COORDINATE WITH APPROPRIATE UTILITY AGENCY.

6. RELOCATE (REL) IN KIND, REMOVE (R), OR PROTECT (P) EXISTING FENCE. COORDINATE REMOVALS AND RELOCATIONS WITH PROPERTY OWNER.
7. RELOCATE EXISTING MAILBOX PER WSDOT/APWA STANDARD PLAN H-12 UNLESS NOTED TO BE (P) PROTECTED.
8. REMOVE (R), PROTECT (P), OR TRIM (T) EXISTING SHRUB OR TREE AS SHOWN ON THE PLANS OR AS DIRECTED.
13. EXISTING UTILITY POLE, LIGHT POLE, AND/OR GUY WIRE TO BE RELOCATED (R) BY OTHERS OR PROTECTED (P). COORDINATE WITH APPROPRIATE UTILITY.
17. SAWCUT AND REMOVE EXISTING PAVEMENT AT ALL CONNECTIONS AND TRANSITIONS A MINIMUM OF 4' FROM FACE OF NEW CURB, 1' FROM EDGE OF EXISTING PAVEMENT, OR AS DIRECTED BY FIELD INSPECTOR.
30. CONSTRUCT DRIVEWAY PER DETAIL AND "DRIVEWAY APPROACH SCHEDULE" TABLE ON SHEET 11.
31. CONSTRUCT CONCRETE CURB AND GUTTER PER DETAIL SHEET 12.
32. CONSTRUCT CONCRETE SIDEWALK PER DETAIL SHEET 14.
34. MATCH NEW CURB TO EXISTING CURB. CURB GRADES ARE BASED ON A 0.5' EXPOSURE. TRANSITION CURB EXPOSURE ON NEW CURB TO MATCH EXISTING CURB AT LEAST 3-FEET PRIOR TO MATCH POINT. IF NECESSARY, SAWCUT EXISTING CURB TO CREATE A CLEAN, UNDISTURBED EDGE.
35. MATCH NEW SIDEWALK TO EXISTING SIDEWALK. TRANSITION NEW SIDEWALK WIDTH/LOCATION TO MATCH EXISTING WIDTH/LOCATION AT 5:1 PRIOR TO MATCH LINE. IF NECESSARY, SAWCUT EXISTING SIDEWALK TO CREATE A CLEAN, UNDISTURBED EDGE.
36. CONSTRUCT 6'X6' A.C. LEVEL LANDING AND 6' TRANSITION RAMP FROM END OF SIDEWALK TO SHOULDER. 0.25' MIN CLASS 'A' A.C. OVER 0.4' CRUSHED ROCK.
37. CONSTRUCT A.C. PAVEMENT RECONSTRUCTION/WIDENING. REFER TO TYPICAL SECTIONS ON SHEETS 8.
38. CONSTRUCT A.C. OVERLAY. REFER TO TYPICAL SECTIONS ON SHEETS 8.
40. CONSTRUCT EXTRUDED CURB PER CLARK COUNTY STD. DRAWING F18A.
42. INSTALL` FENCE AT LOCATIONS NOTED ON THE PLANS OR AS DIRECTED IN THE FIELD. SEE TYPICAL SECTION ON SHEET 12.
64. EXISTING STORM PIPE AND/OR STRUCTURE TO REMAIN.
66. ADJUST EXISTING MANHOLE CASTING WITH ADJUSTING RINGS/CATCH BASIN/VALVE BOX RIM TO FINISH GRADE.
69. CONSTRUCT TYPE 1 CURB INLET PER DETAIL ON SHEET 18. INSTALL STORM PIPE AS SHOWN AND PER "STORM DRAINAGE DATA" INFORMATION TABLE THIS SHEET.
73. CONSTRUCT ROADSIDE DITCH, GRADE TO DRAIN TO INLET.
80. RELOCATE (R), PROTECT (P) ADJUST (A) EXISTING SANITARY SEWER CLEANOUT, WATER VALVE OR WATER METER BOX AND/OR SERVICE AS REQUIRED AND DIRECTED. ALL DISTURBED SERVICE LINES SHALL BE REPAIRED AS REQUIRED.
81. EXISTING FIRE HYDRANT TO BE RELOCATED (R), PROTECTED (P), OR ADJUSTED (A). COORDINATE WITH CLARK PUBLIC UTILITIES.
82. PROTECT EXISTING WATER LINE.
90. RELOCATE (R), PROTECT (P), OR ADJUST (A) EXISTING IRRIGATION AS REQUIRED AND DIRECTED. ALL DISTURBED IRRIGATION SHALL BE REPAIRED AS REQUIRED.

FOR INFORMATIONAL PURPOSES ONLY
ALL PLAN DETAIL AND INFORMATION IS NOT SHOWN ON THIS 90% COMPLETED SET OF PLANS.
90% SUBMITTAL - JULY 2004

DESIGNED:	TSH
DRAWN:	NPR/RAF
CRP:	330222
HOR.	1" = 20'
VERT.	N/A
DATE:	7/2004
DWG:	
SHEET	81 OF 99

CALL 48 HOURS BEFORE YOU DIG
1-800-553-4344
"It's the Law"
NORTHWEST UTILITIES NOTIFICATION CENTER

Harper Houf Peterson Righellis Inc.
ENGINEERS • PLANNERS • SURVEYORS
1104 MAIN STREET, SUITE 100, VANCOUVER, WA 98660
TEL 360.750.1131 www.hhpr.com FAX 360.750.1141

DESIGN & ENGINEERING DIVISION

NE 88TH STREET INTERSECTIONS
NE HIGHWAY 99

proud past, promising future
CLARK COUNTY WASHINGTON

P:\Ck-12 (NE 88th)\CRK12-DWGS\Ck12-ISECTWEST1.DWG

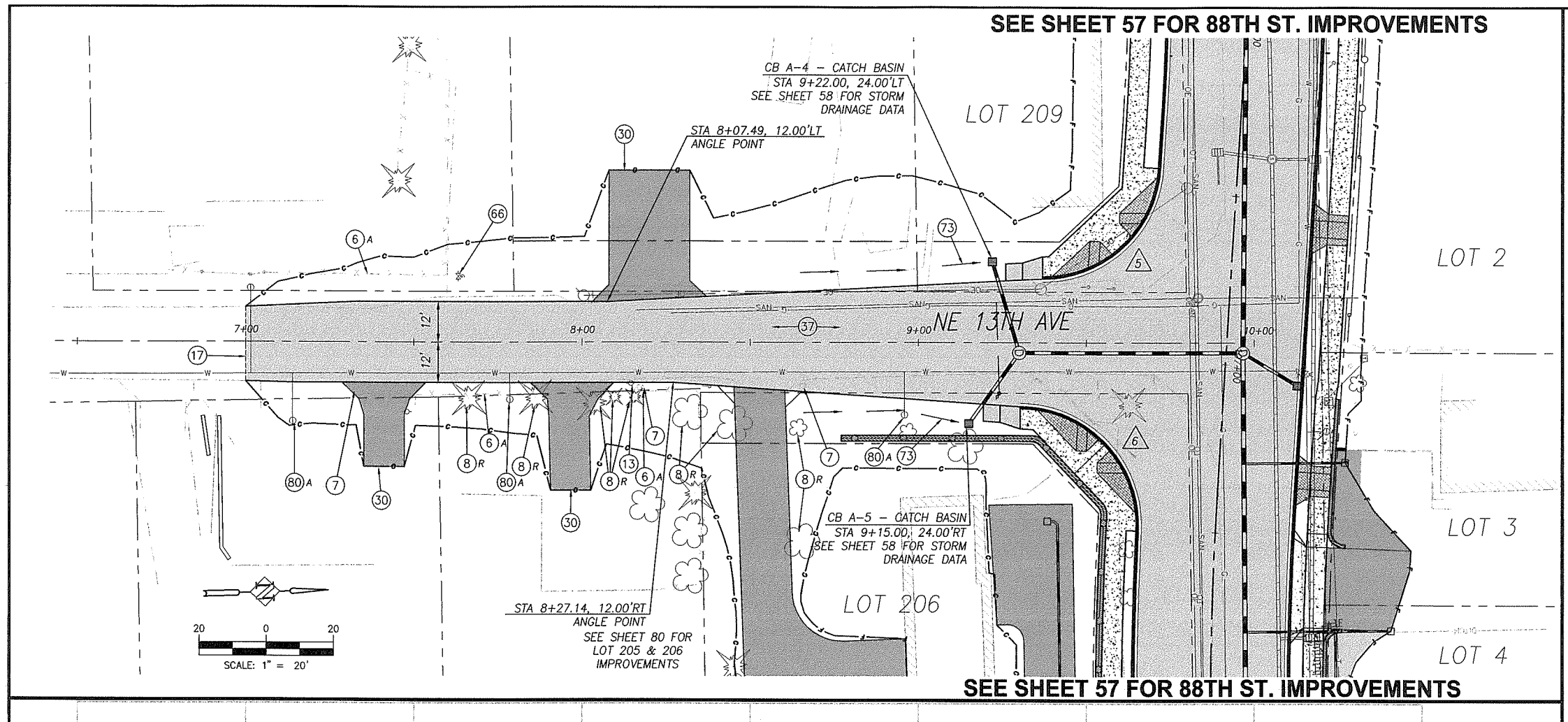

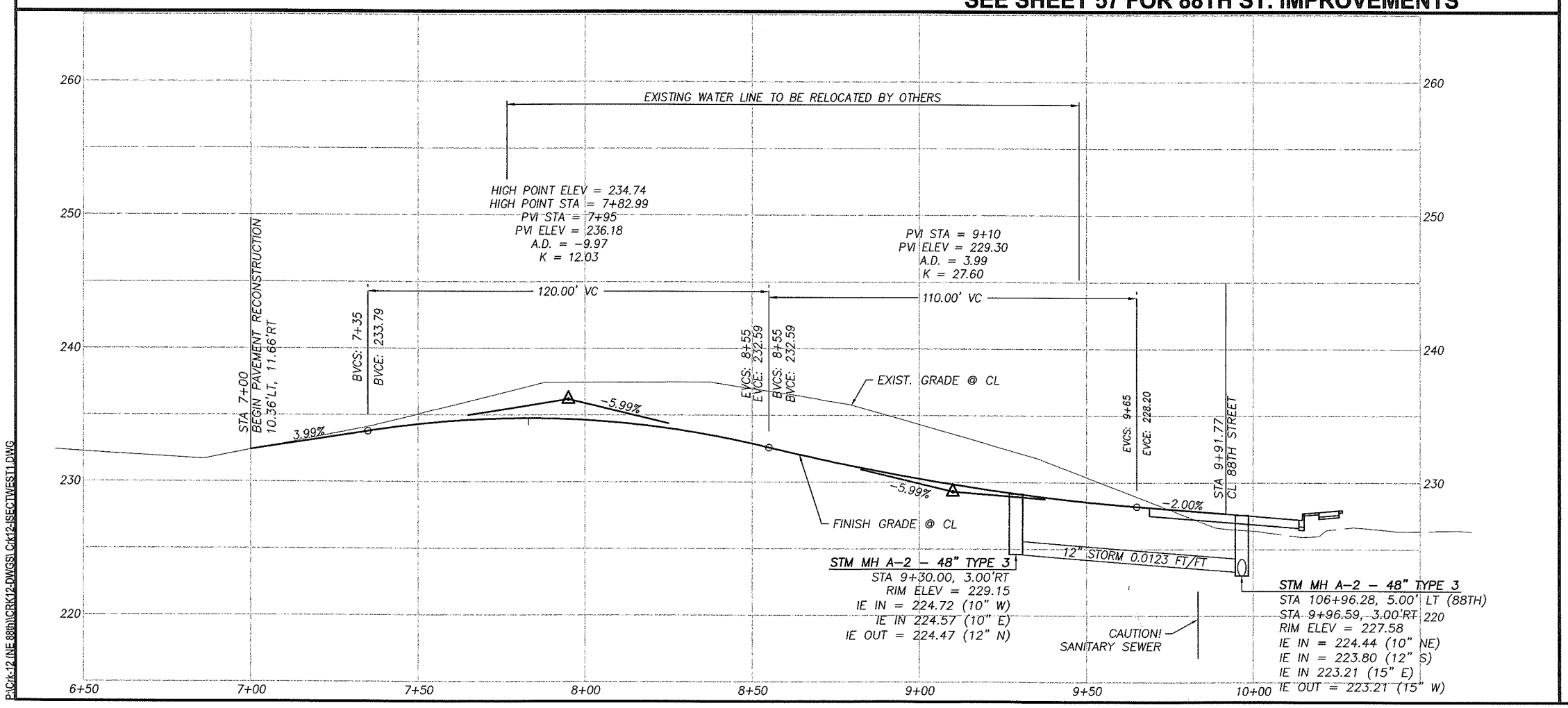

P:\Crk-12 NE 88th\CRK12-DWG\SI Crk12-\SECTWEST1.DWG

CONSTRUCTION NOTES:

NOTES:
SEE SITE PREPARATION AND DEMOLITION PLAN SHEETS FOR STRUCTURES AND FRANCHISE UTILITY COMMENTS.

CONTRACTOR SHALL POTHOLE TO VERIFY ALL CROSSINGS PRIOR TO CONSTRUCTION TO ENSURE CLEARANCE OF UTILITIES. COORDINATE WITH APPROPRIATE UTILITY AGENCY.

- (6) RELOCATE (REL) IN KIND, REMOVE (R), OR PROTECT (P) EXISTING FENCE. COORDINATE REMOVALS AND RELOCATIONS WITH PROPERTY OWNER.
- (7) RELOCATE EXISTING MAILBOX PER WSDOT/APWA STANDARD PLAN H-12 UNLESS NOTED TO BE (P) PROTECTED.
- (8) REMOVE (R), PROTECT (P), OR TRIM (T) EXISTING SHRUB OR TREE AS SHOWN ON THE PLANS OR AS DIRECTED.
- (13) EXISTING UTILITY POLE, LIGHT POLE, AND/OR GUY WIRE TO BE RELOCATED (R) BY OTHERS OR PROTECTED (P). COORDINATE WITH APPROPRIATE UTILITY.
- (17) SAWCUT AND REMOVE EXISTING PAVEMENT AT ALL CONNECTIONS AND TRANSITIONS A MINIMUM OF 4' FROM FACE OF NEW CURB, 1' FROM EDGE OF EXISTING PAVEMENT, OR AS DIRECTED BY FIELD INSPECTOR.
- (30) CONSTRUCT DRIVEWAY PER DETAIL AND "DRIVEWAY APPROACH SCHEDULE" TABLE ON SHEET 11.
- (31) CONSTRUCT CONCRETE CURB AND GUTTER PER DETAIL SHEET 12.
- (32) CONSTRUCT CONCRETE SIDEWALK PER DETAIL SHEET 14.
- (34) MATCH NEW CURB TO EXISTING CURB. CURB GRADES ARE BASED ON A 0.5' EXPOSURE. TRANSITION CURB EXPOSURE ON NEW CURB TO MATCH EXISTING CURB AT LEAST 3-FEET PRIOR TO MATCH POINT. IF NECESSARY, SAWCUT EXISTING CURB TO CREATE A CLEAN, UNDISTURBED EDGE.
- (35) MATCH NEW SIDEWALK TO EXISTING SIDEWALK. TRANSITION NEW SIDEWALK WIDTH/LOCATION TO MATCH EXISTING WIDTH/LOCATION AT 5:1 PRIOR TO MATCH LINE. IF NECESSARY, SAWCUT EXISTING SIDEWALK TO CREATE A CLEAN, UNDISTURBED EDGE.
- (36) CONSTRUCT 6'X6' A.C. LEVEL LANDING AND 6' TRANSITION RAMP FROM END OF SIDEWALK TO SHOULDER. 0.25' MIN CLASS 'A' A.C. OVER 0.4' CRUSHED ROCK.
- (37) CONSTRUCT A.C. PAVEMENT RECONSTRUCTION/WIDENING. REFER TO TYPICAL SECTIONS ON SHEETS 8.
- (38) CONSTRUCT A.C. OVERLAY. REFER TO TYPICAL SECTIONS ON SHEETS 8.
- (40) CONSTRUCT EXTRUDED CURB PER CLARK COUNTY STD. DRAWING F18A.
- (42) INSTALL FENCE AT LOCATIONS NOTED ON THE PLANS OR AS DIRECTED IN THE FIELD. SEE TYPICAL SECTION ON SHEET 12.
- (64) EXISTING STORM PIPE AND/OR STRUCTURE TO REMAIN.
- (66) ADJUST EXISTING MANHOLE CASTING WITH ADJUSTING RINGS/CATCH BASIN/VALVE BOX RIM TO FINISH GRADE.
- (69) CONSTRUCT TYPE 1 CURB INLET PER DETAIL ON SHEET 18. INSTALL STORM PIPE AS SHOWN AND PER "STORM DRAINAGE DATA" INFORMATION TABLE THIS SHEET.
- (73) CONSTRUCT ROADSIDE DITCH, GRADE TO DRAIN TO INLET.
- (80) RELOCATE (R), PROTECT (P) ADJUST (A) EXISTING SANITARY SEWER CLEANOUT, WATER VALVE OR WATER METER BOX AND/OR SERVICE AS REQUIRED AND DIRECTED. ALL DISTURBED SERVICE LINES SHALL BE REPAIRED AS REQUIRED.
- (81) EXISTING FIRE HYDRANT TO BE RELOCATED (R), PROTECTED (P), OR ADJUSTED (A). COORDINATE WITH CLARK PUBLIC UTILITIES.
- (82) PROTECT EXISTING WATER LINE.
- (90) RELOCATE (R), PROTECT (P), OR ADJUST (A) EXISTING IRRIGATION AS REQUIRED AND DIRECTED. ALL DISTURBED IRRIGATION SHALL BE REPAIRED AS REQUIRED.

CURB RETURN TABLES

	DESCRIPTION	FL ELEV
(5)	PC 106+43.11, 23.00' RT	227.87
	1/4 Δ	228.01
Δ = 86°26'09"	1/2 Δ	228.08
R = 35.00'	3/4 Δ	228.21
L = 52.80'	PT 9+37.02, 19.00' LT	228.52
	DESCRIPTION	**FL ELEV**
(6)	PC 9+30.36, 19.00' RT	228.73
	1/4 Δ	228.39
Δ = 92°55'59"	1/2 Δ	228.28
R = 35.00'	3/4 Δ	228.34
L = 56.77'	PT 107+50.67, 23.00' RT	228.41

*MATCH EXISTING FL ELEV
SEE SHEET 6 FOR CURB RAMP STAKING DATA

FOR INFORMATIONAL PURPOSES ONLY
ALL PLAN DETAIL AND INFORMATION IS NOT SHOWN ON THIS 90% COMPLETED SET OF PLANS.
90% SUBMITTAL - JULY 2004

DESIGNED:	TSH
DRAWN:	NPR/RAF
CRP:	330222
HOR.	1" = 20'
VERT.	1" = 5'
DATE:	7/2004
DWG:	
SHEET	82 OF 99

CALL 48 HOURS BEFORE YOU DIG
1-800-553-4344
"It's the Law"
NORTHWEST UTILITIES NOTIFICATION CENTER

Harper Houf Peterson Righellis Inc.
ENGINEERS · PLANNERS · SURVEYORS
1104 MAIN STREET, SUITE 100, VANCOUVER, WA 98660
TEL 360.750.1131 www.hhpr.com FAX 360.750.1141

DESIGN & ENGINEERING DIVISION

NE 88TH STREET INTERSECTIONS NE 13TH AVENUE

proud past, promising future

CLARK COUNTY WASHINGTON

SEE SHEET 59 FOR 88TH ST. IMPROVEMENTS

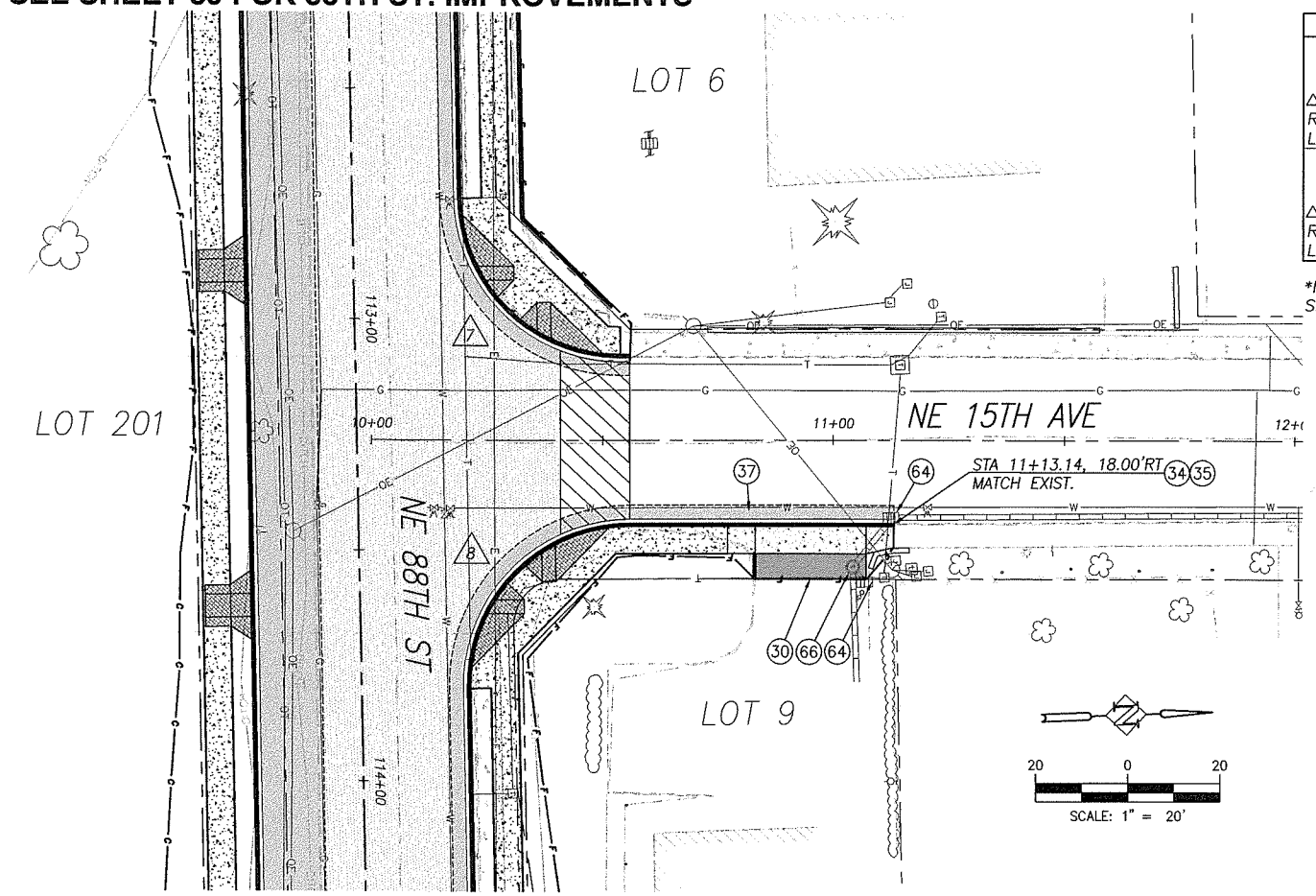

CURB RETURN TABLES		
7	DESCRIPTION	FL ELEV
	PC 112+74.31, 23.00' LT	242.51
	1/4 Δ	242.88
Δ = 88°29'45"	1/2 Δ	243.06
R = 34.09'	3/4 Δ	243.17
L = 54.06'	PT 10+53.51, 18.00' LT	243.36
8	DESCRIPTION	FL ELEV
	PC 10+55.91, 18.00' RT	244.64
	1/4 Δ	244.63
Δ = 91°11'46"	1/2 Δ	244.67
R = 35.00'	3/4 Δ	244.75
L = 55.71	PT 113+80.35, 23.00' LT	244.88

*MATCH EXISTING FL ELEV
SEE SHEET 6 FOR CURB RAMP STAKING DATA

SEE SHEET 60 FOR 88TH ST. IMPROVEMENTS

CONSTRUCTION NOTES:

NOTES:
SEE SITE PREPARATION AND DEMOLITION PLAN SHEETS FOR STRUCTURES AND FRANCHISE UTILITY COMMENTS.

CONTRACTOR SHALL POTHOLE TO VERIFY ALL CROSSINGS PRIOR TO CONSTRUCTION TO ENSURE CLEARANCE OF UTILITIES. COORDINATE WITH APPROPRIATE UTILITY AGENCY.

(6) RELOCATE (REL) IN KIND, REMOVE (R), OR PROTECT (P) EXISTING FENCE. COORDINATE REMOVALS AND RELOCATIONS WITH PROPERTY OWNER.

(7) RELOCATE EXISTING MAILBOX PER WSDOT/APWA STANDARD PLAN H-12 UNLESS NOTED TO BE (P) PROTECTED.

(8) REMOVE (R), PROTECT (P), OR TRIM (T) EXISTING SHRUB OR TREE AS SHOWN ON THE PLANS OR AS DIRECTED.

(13) EXISTING UTILITY POLE, LIGHT POLE, AND/OR GUY WIRE TO BE RELOCATED (R) BY OTHERS OR PROTECTED (P). COORDINATE WITH APPROPRIATE UTILITY.

(17) SAWCUT AND REMOVE EXISTING PAVEMENT AT ALL CONNECTIONS AND TRANSITIONS A MINIMUM OF 4' FROM FACE OF NEW CURB, 1' FROM EDGE OF EXISTING PAVEMENT, OR AS DIRECTED BY FIELD INSPECTOR.

(30) CONSTRUCT DRIVEWAY PER DETAIL AND "DRIVEWAY APPROACH SCHEDULE" TABLE ON SHEET 11.

(31) CONSTRUCT CONCRETE CURB AND GUTTER PER DETAIL SHEET 12.

(32) CONSTRUCT CONCRETE SIDEWALK PER DETAIL SHEET 14.

(34) MATCH NEW CURB TO EXISTING CURB. CURB GRADES ARE BASED ON A 0.5' EXPOSURE. TRANSITION CURB EXPOSURE ON NEW CURB TO MATCH EXISTING CURB AT LEAST 3-FEET PRIOR TO MATCH POINT. IF NECESSARY, SAWCUT EXISTING CURB TO CREATE A CLEAN, UNDISTURBED EDGE.

(35) MATCH NEW SIDEWALK TO EXISTING SIDEWALK. TRANSITION NEW SIDEWALK WIDTH/LOCATION TO MATCH EXISTING WIDTH/LOCATION AT 5:1 PRIOR TO MATCH LINE. IF NECESSARY, SAWCUT EXISTING SIDEWALK TO CREATE A CLEAN, UNDISTURBED EDGE.

(36) CONSTRUCT 6'X6' A.C. LEVEL LANDING AND 6' TRANSITION RAMP FROM END OF SIDEWALK TO SHOULDER. 0.25' MIN CLASS 'A' A.C. OVER 0.4' CRUSHED ROCK.

(37) CONSTRUCT A.C. PAVEMENT RECONSTRUCTION/WIDENING. REFER TO TYPICAL SECTIONS ON SHEETS 8.

(38) CONSTRUCT A.C. OVERLAY. REFER TO TYPICAL SECTIONS ON SHEETS 8.

(40) CONSTRUCT EXTRUDED CURB PER CLARK COUNTY STD. DRAWING F18A.

(42) INSTALL FENCE AT LOCATIONS NOTED ON THE PLANS OR AS DIRECTED IN THE FIELD. SEE TYPICAL SECTION ON SHEET 12.

(64) EXISTING STORM PIPE AND/OR STRUCTURE TO REMAIN.

(66) ADJUST EXISTING MANHOLE CASTING WITH ADJUSTING RINGS/CATCH BASIN/VALVE BOX RIM TO FINISH GRADE.

(69) CONSTRUCT TYPE 1 CURB INLET PER DETAIL ON SHEET 18. INSTALL STORM PIPE AS SHOWN AND PER "STORM DRAINAGE DATA" INFORMATION TABLE THIS SHEET.

(73) CONSTRUCT ROADSIDE DITCH, GRADE TO DRAIN TO INLET.

(80) RELOCATE (R), PROTECT (P) ADJUST (A) EXISTING SANITARY SEWER CLEANOUT, WATER VALVE OR WATER METER BOX AND/OR SERVICE AS REQUIRED AND DIRECTED. ALL DISTURBED SERVICE LINES SHALL BE REPAIRED AS REQUIRED.

(81) EXISTING FIRE HYDRANT TO BE RELOCATED (R), PROTECTED (P), OR ADJUSTED (A). COORDINATE WITH CLARK PUBLIC UTILITIES.

(82) PROTECT EXISTING WATER LINE.

(90) RELOCATE (R), PROTECT (P), OR ADJUST (A) EXISTING IRRIGATION AS REQUIRED AND DIRECTED. ALL DISTURBED IRRIGATION SHALL BE REPAIRED AS REQUIRED.

FOR INFORMATIONAL PURPOSES ONLY
ALL PLAN DETAIL AND INFORMATION IS NOT SHOWN ON THIS 90% COMPLETED SET OF PLANS.
90% SUBMITTAL - JULY 2004

DESIGNED:	TSH
DRAWN:	NPR/RAF
CRP:	330222
HOR:	1" = 20'
VERT:	N/A
DATE:	7/2004
DWG:	
SHEET	83 OF 99

CALL 48 HOURS BEFORE YOU DIG
1-800-553-4344
"It's the Law"
NORTHWEST UTILITIES NOTIFICATION CENTER

Harper Houf Peterson Righellis Inc.
ENGINEERS · PLANNERS · SURVEYORS
1104 MAIN STREET, SUITE 100, VANCOUVER, WA 98660
TEL 360.750.1131 www.hhpr.com FAX 360.750.1141

DESIGN & ENGINEERING DIVISION

NE 88TH STREET INTERSECTIONS
NE 15TH AVENUE

proud past, promising future
CLARK COUNTY WASHINGTON

P:\Ck-12 (NE 88th)\CRK12-DWGS\ Crk12-ISECTWEST1.DWG

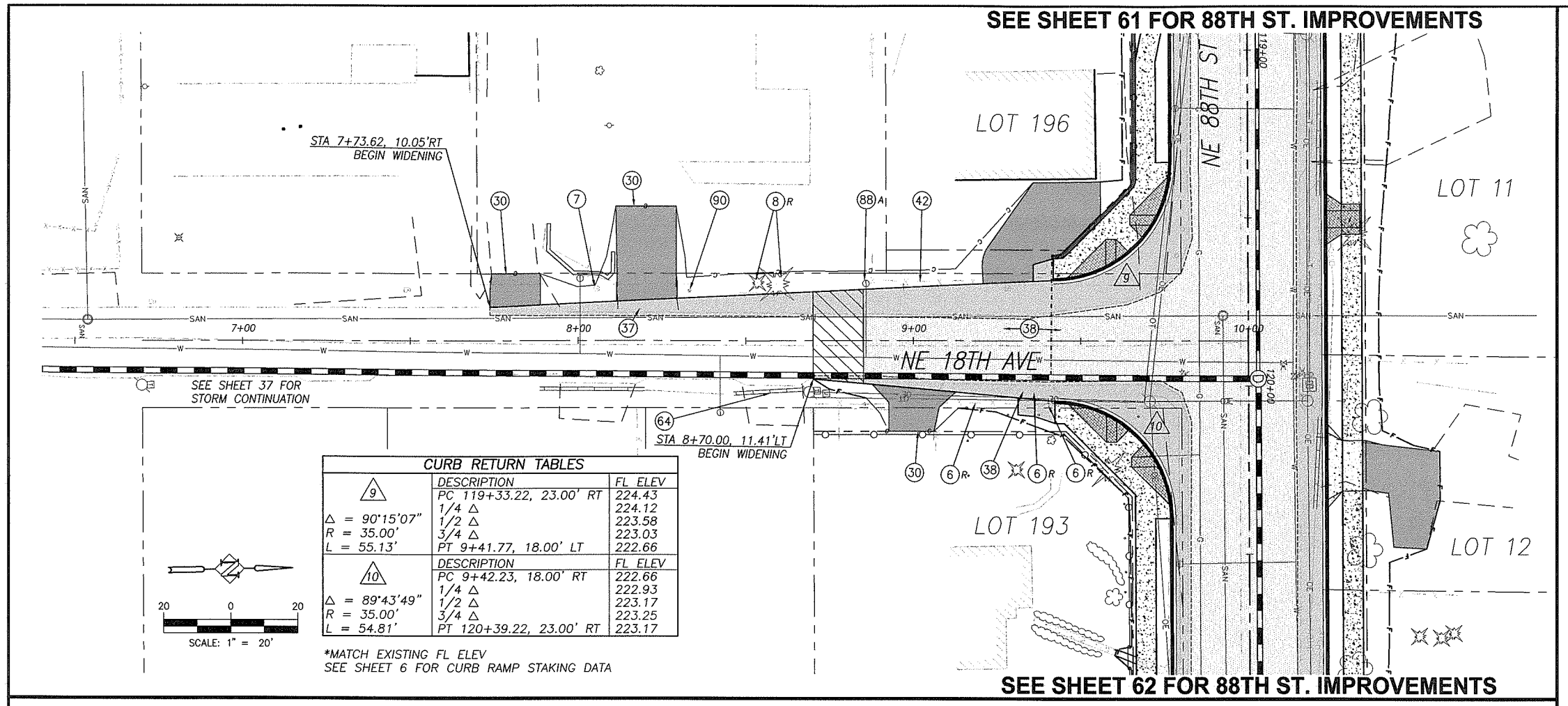

CURB RETURN TABLES		
9	DESCRIPTION	FL ELEV
	PC 119+33.22, 23.00' RT	224.43
	1/4 Δ	224.12
Δ = 90°15'07"	1/2 Δ	223.58
R = 35.00'	3/4 Δ	223.03
L = 55.13'	PT 9+41.77, 18.00' LT	222.66
10	DESCRIPTION	FL ELEV
	PC 9+42.23, 18.00' RT	222.66
	1/4 Δ	222.93
Δ = 89°43'49"	1/2 Δ	223.17
R = 35.00'	3/4 Δ	223.25
L = 54.81'	PT 120+39.22, 23.00' RT	223.17

*MATCH EXISTING FL ELEV
SEE SHEET 6 FOR CURB RAMP STAKING DATA

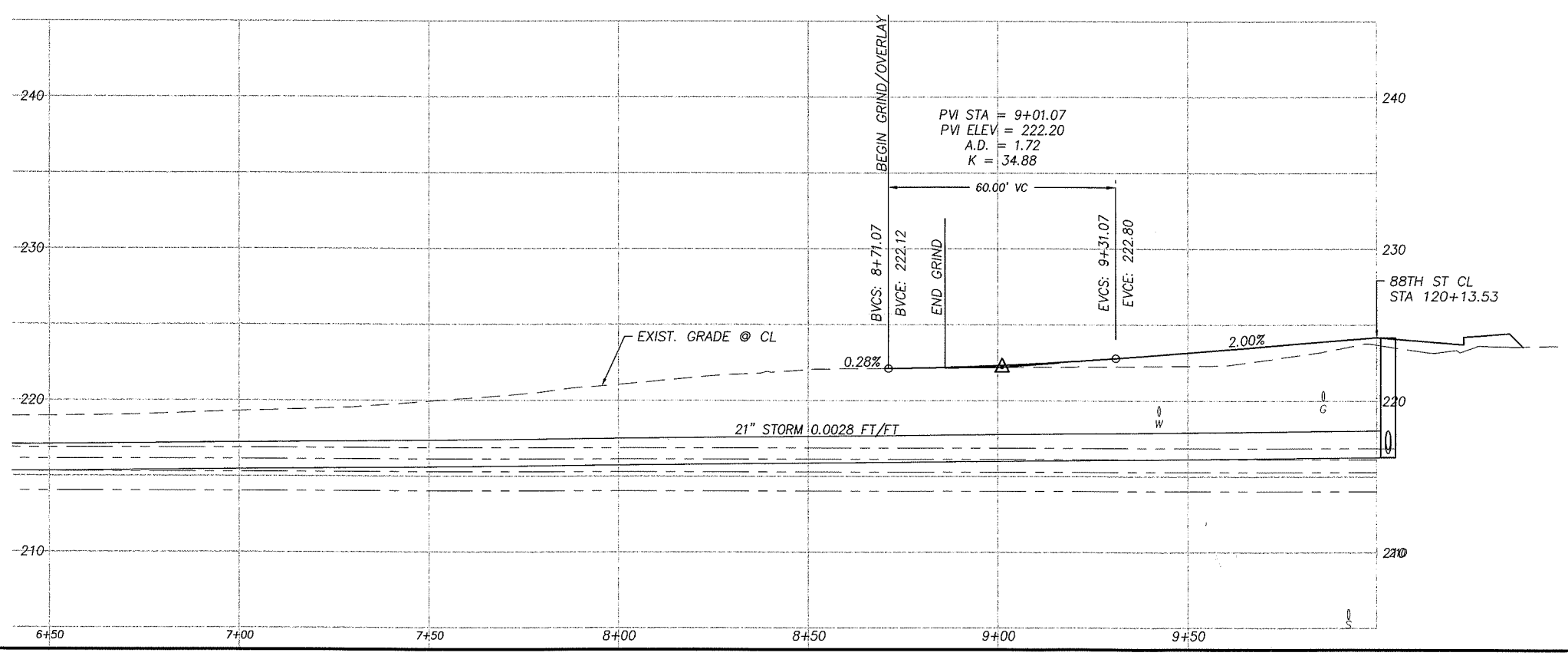

CONSTRUCTION NOTES:

NOTES:
SEE SITE PREPARATION AND DEMOLITION PLAN SHEETS FOR STRUCTURES AND FRANCHISE UTILITY COMMENTS.

CONTRACTOR SHALL POTHOLE TO VERIFY ALL CROSSINGS PRIOR TO CONSTRUCTION TO ENSURE CLEARANCE OF UTILITIES. COORDINATE WITH APPROPRIATE UTILITY AGENCY.

(6) RELOCATE (REL) IN KIND, REMOVE (R), OR PROTECT (P) EXISTING FENCE. COORDINATE REMOVALS AND RELOCATIONS WITH PROPERTY OWNER.

(7) RELOCATE EXISTING MAILBOX PER WSDOT/APWA STANDARD PLAN H-12 UNLESS NOTED TO BE (P) PROTECTED.

(8) REMOVE (R), PROTECT (P), OR TRIM (T) EXISTING SHRUB OR TREE AS SHOWN ON THE PLANS OR AS DIRECTED.

(13) EXISTING UTILITY POLE, LIGHT POLE, AND/OR GUY WIRE TO BE RELOCATED (R) BY OTHERS OR PROTECTED (P). COORDINATE WITH APPROPRIATE UTILITY.

(17) SAWCUT AND REMOVE EXISTING PAVEMENT AT ALL CONNECTIONS AND TRANSITIONS A MINIMUM OF 4' FROM FACE OF NEW CURB, 1' FROM EDGE OF EXISTING PAVEMENT, OR AS DIRECTED BY FIELD INSPECTOR.

(30) CONSTRUCT DRIVEWAY PER DETAIL AND "DRIVEWAY APPROACH SCHEDULE" TABLE ON SHEET 11.

(31) CONSTRUCT CONCRETE CURB AND GUTTER PER DETAIL SHEET 12.

(32) CONSTRUCT CONCRETE SIDEWALK PER DETAIL SHEET 14.

(34) MATCH NEW CURB TO EXISTING CURB. CURB GRADES ARE BASED ON A 0.5' EXPOSURE. TRANSITION CURB EXPOSURE ON NEW CURB TO MATCH EXISTING CURB AT LEAST 3-FEET PRIOR TO MATCH POINT. IF NECESSARY, SAWCUT EXISTING CURB TO CREATE A CLEAN, UNDISTURBED EDGE.

(35) MATCH NEW SIDEWALK TO EXISTING SIDEWALK. TRANSITION NEW SIDEWALK WIDTH/LOCATION TO MATCH EXISTING WIDTH/LOCATION AT 5:1 PRIOR TO MATCH LINE. IF NECESSARY, SAWCUT EXISTING SIDEWALK TO CREATE A CLEAN, UNDISTURBED EDGE.

(36) CONSTRUCT 6'X6' A.C. LEVEL LANDING AND 6' TRANSITION RAMP FROM END OF SIDEWALK TO SHOULDER. 0.25' MIN CLASS 'A' A.C. OVER 0.4' CRUSHED ROCK.

(37) CONSTRUCT A.C. PAVEMENT RECONSTRUCTION/WIDENING. REFER TO TYPICAL SECTIONS ON SHEETS 8.

(38) CONSTRUCT A.C. OVERLAY. REFER TO TYPICAL SECTIONS ON SHEETS 8.

(40) CONSTRUCT EXTRUDED CURB PER CLARK COUNTY STD. DRAWING F18A.

(42) INSTALL FENCE AT LOCATIONS NOTED ON THE PLANS OR AS DIRECTED IN THE FIELD. SEE TYPICAL SECTION ON SHEET 12.

(64) EXISTING STORM PIPE AND/OR STRUCTURE TO REMAIN.

(66) ADJUST EXISTING MANHOLE CASTING WITH ADJUSTING RINGS/CATCH BASIN/VALVE BOX RIM TO FINISH GRADE.

(69) CONSTRUCT TYPE 1 CURB INLET PER DETAIL ON SHEET 18. INSTALL STORM PIPE AS SHOWN AND PER "STORM DRAINAGE DATA" INFORMATION TABLE THIS SHEET.

(73) CONSTRUCT ROADSIDE DITCH, GRADE TO DRAIN TO INLET.

(80) RELOCATE (R), PROTECT (P) ADJUST (A) EXISTING SANITARY SEWER CLEANOUT, WATER VALVE OR WATER METER BOX AND/OR SERVICE AS REQUIRED AND DIRECTED. ALL DISTURBED SERVICE LINES SHALL BE REPAIRED AS REQUIRED.

(81) EXISTING FIRE HYDRANT TO BE RELOCATED (R), PROTECTED (P), OR ADJUSTED (A). COORDINATE WITH CLARK PUBLIC UTILITIES.

(82) PROTECT EXISTING WATER LINE.

(90) RELOCATE (R), PROTECT (P), OR ADJUST (A) EXISTING IRRIGATION AS REQUIRED AND DIRECTED. ALL DISTURBED IRRIGATION SHALL BE REPAIRED AS REQUIRED.

FOR INFORMATIONAL PURPOSES ONLY
ALL PLAN DETAIL AND INFORMATION IS NOT SHOWN ON THIS 90% COMPLETED SET OF PLANS.
90% SUBMITTAL - JULY 2004

DESIGNED:	TSH
DRAWN:	NPR/RAF
CRP:	330222
HOR.	1" = 20'
VERT.	1" = 5'
DATE:	7/2004
DWG:	
SHEET	84 OF 99

CALL 48 HOURS BEFORE YOU DIG
1-800-553-4344
"It's the Law"
NORTHWEST UTILITIES NOTIFICATION CENTER

Harper Houf Peterson Righellis Inc.
ENGINEERS · PLANNERS · SURVEYORS
1114 Main Street, Suite 300, Vancouver, WA 98660
TEL 360.750.1131 www.hhpr.com FAX 360.750.1141

DESIGN & ENGINEERING DIVISION

NE 88TH STREET INTERSECTIONS
NE 18TH AVENUE

CLARK COUNTY WASHINGTON
proud past, promising future

P:\Crk-12 (NE 88th)\CRK12-DWGS\Crk12-ISECTIWEST2.DWG

SEE SHEET 62 FOR 88TH ST. IMPROVEMENTS

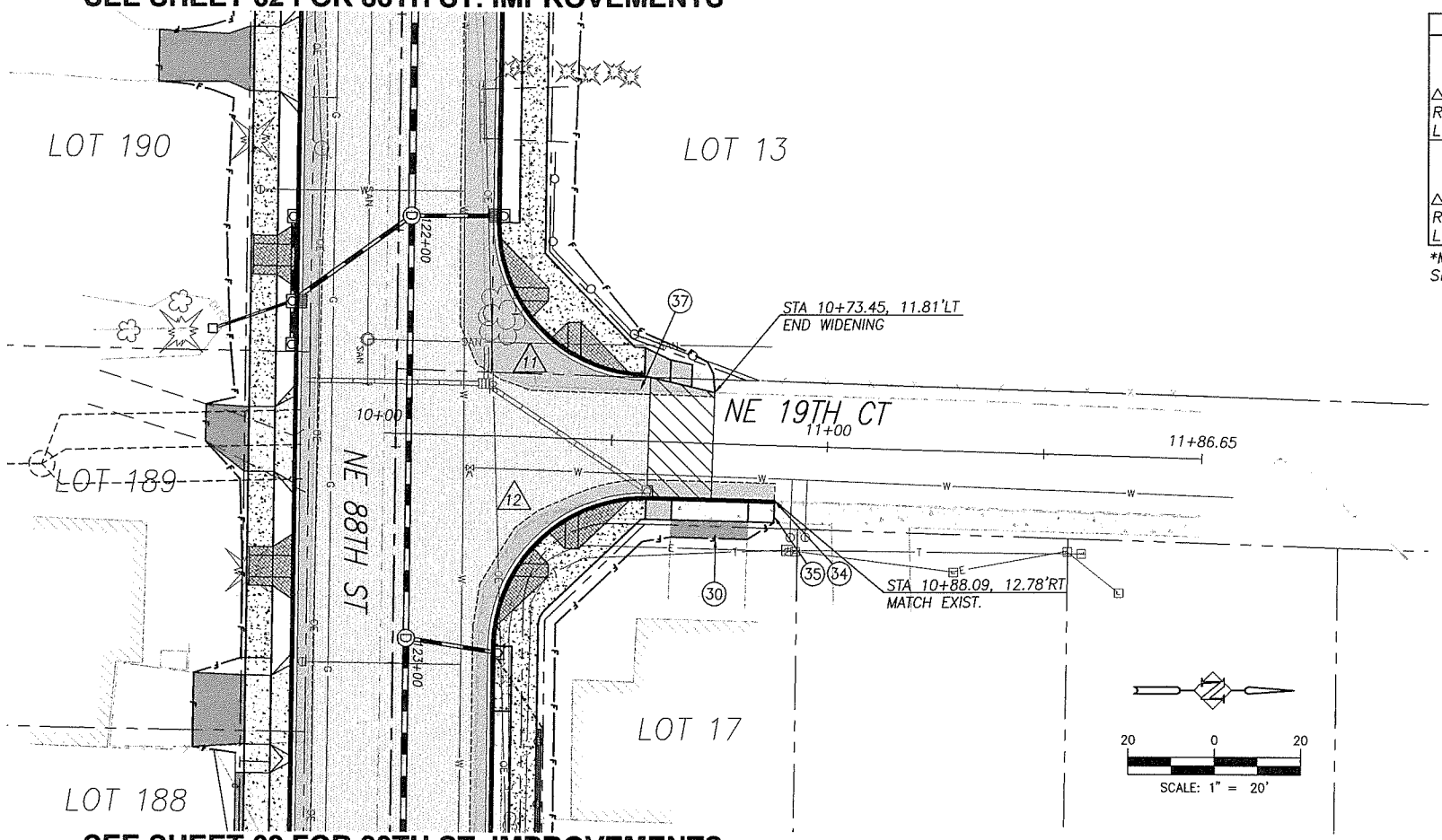

SEE SHEET 62 FOR 88TH ST. IMPROVEMENTS

CURB RETURN TABLES		
11	DESCRIPTION	FL ELEV
	PC 121+97.73, 23.00' LT	221.64
	1/4 Δ	221.61
Δ = 88°54'46"	1/2 Δ	221.53
R = 35.00'	3/4 Δ	221.38
L = 54.31'	PT 10+57.34, 8.29' LT	221.15
12	DESCRIPTION	FL ELEV
	PC 10+59.52, 27.71' RT	220.30
	1/4 Δ	220.66
Δ = 91°36'33"	1/2 Δ	221.21
R = 35.00'	3/4 Δ	221.74
L = 55.96'	PT 122+95.75, 23.00' LT	222.01

*MATCH EXISTING FL ELEV
SEE SHEET 6 FOR CURB RAMP STAKING DATA

SEE SHEET 62 FOR 88TH ST. IMPROVEMENTS

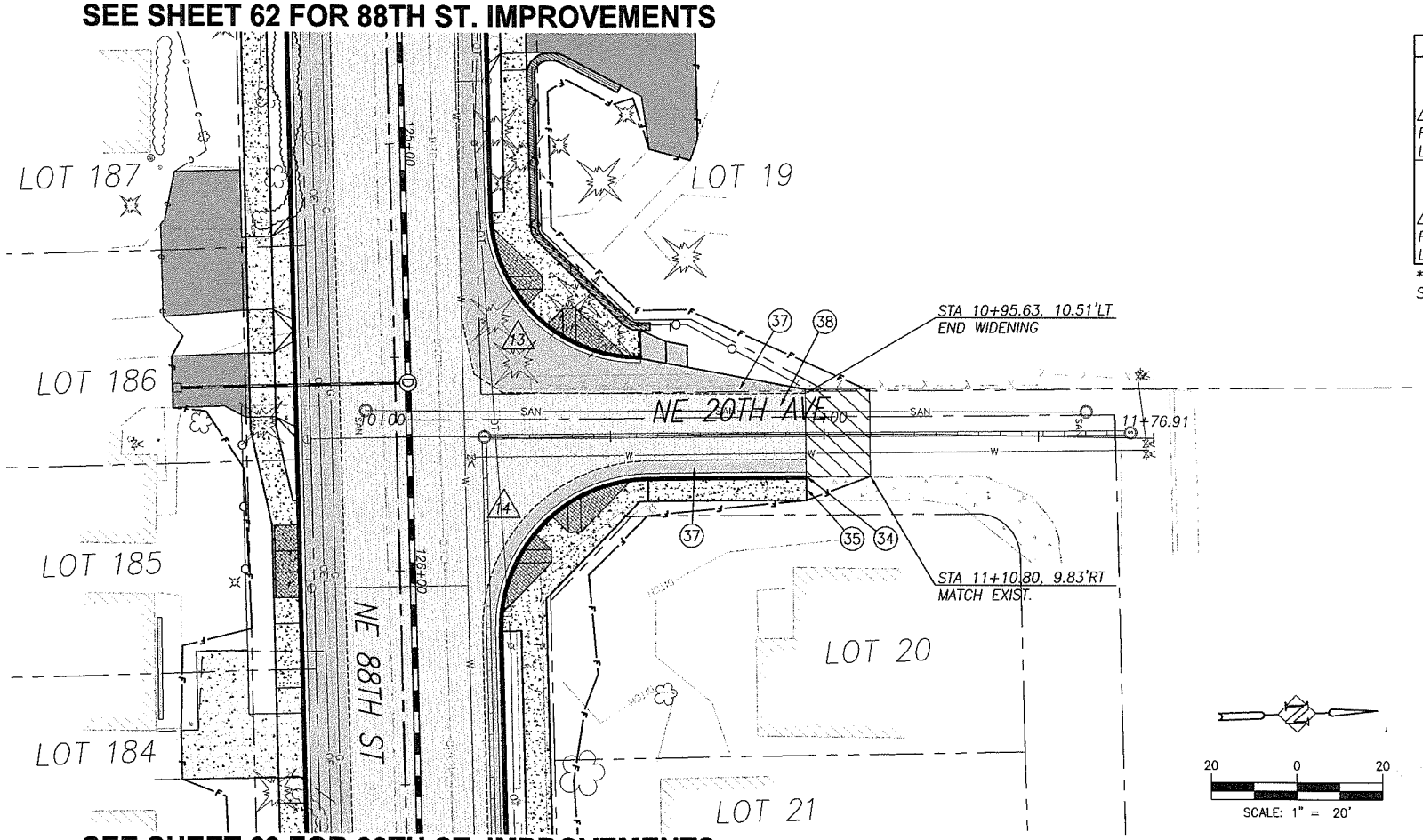

SEE SHEET 63 FOR 88TH ST. IMPROVEMENTS

CURB RETURN TABLES		
13	DESCRIPTION	FL ELEV
	PC 125+16.56, 23.00' LT	225.48
	1/4 Δ	225.53
Δ = 89°08'43"	1/2 Δ	225.21
R = 35.00'	3/4 Δ	224.54
L = 54.46'	PT 10+57.21, 13.96' LT	223.57
14	DESCRIPTION	FL ELEV
	PC 10+58.76, 14.04' RT	223.64
	1/4 Δ	224.65
Δ = 90°51'17"	1/2 Δ	225.43
R = 35.00'	3/4 Δ	225.84
L = 55.50'	PT 126+14.57, 23.00' LT	225.88

*MATCH EXISTING FL ELEV
SEE SHEET 6 FOR CURB RAMP STAKING DATA

CONSTRUCTION NOTES:

NOTES:
SEE SITE PREPARATION AND DEMOLITION PLAN SHEETS FOR STRUCTURES AND FRANCHISE UTILITY COMMENTS.

CONTRACTOR SHALL POTHOLE TO VERIFY ALL CROSSINGS PRIOR TO CONSTRUCTION TO ENSURE CLEARANCE OF UTILITIES. COORDINATE WITH APPROPRIATE UTILITY AGENCY.

(6) RELOCATE (REL) IN KIND, REMOVE (R), OR PROTECT (P) EXISTING FENCE. COORDINATE REMOVALS AND RELOCATIONS WITH PROPERTY OWNER.

(7) RELOCATE EXISTING MAILBOX PER WSDOT/APWA STANDARD PLAN H-12 UNLESS NOTED TO BE (P) PROTECTED.

(8) REMOVE (R), PROTECT (P), OR TRIM (T) EXISTING SHRUB OR TREE AS SHOWN ON THE PLANS OR AS DIRECTED.

(13) EXISTING UTILITY POLE, LIGHT POLE, AND/OR GUY WIRE TO BE RELOCATED (R) BY OTHERS OR PROTECTED (P). COORDINATE WITH APPROPRIATE UTILITY.

(17) SAWCUT AND REMOVE EXISTING PAVEMENT AT ALL CONNECTIONS AND TRANSITIONS A MINIMUM OF 4' FROM FACE OF NEW CURB, 1' FROM EDGE OF EXISTING PAVEMENT, OR AS DIRECTED BY FIELD INSPECTOR.

(30) CONSTRUCT DRIVEWAY PER DETAIL AND "DRIVEWAY APPROACH SCHEDULE" TABLE ON SHEET 11.

(31) CONSTRUCT CONCRETE CURB AND GUTTER PER DETAIL SHEET 12.

(32) CONSTRUCT CONCRETE SIDEWALK PER DETAIL SHEET 14.

(34) MATCH NEW CURB TO EXISTING CURB. CURB GRADES ARE BASED ON A 0.5' EXPOSURE. TRANSITION CURB EXPOSURE ON NEW CURB TO MATCH EXISTING CURB AT LEAST 3-FEET PRIOR TO MATCH POINT. IF NECESSARY, SAWCUT EXISTING CURB TO CREATE A CLEAN, UNDISTURBED EDGE.

(35) MATCH NEW SIDEWALK TO EXISTING SIDEWALK. TRANSITION NEW SIDEWALK WIDTH/LOCATION TO MATCH EXISTING WIDTH/LOCATION AT 5:1 PRIOR TO MATCH LINE. IF NECESSARY, SAWCUT EXISTING SIDEWALK TO CREATE A CLEAN, UNDISTURBED EDGE.

(36) CONSTRUCT 6'X6' A.C. LEVEL LANDING AND 6' TRANSITION RAMP FROM END OF SIDEWALK TO SHOULDER. 0.25' MIN CLASS 'A' A.C. OVER 0.4' CRUSHED ROCK.

(37) CONSTRUCT A.C. PAVEMENT RECONSTRUCTION/WIDENING. REFER TO TYPICAL SECTIONS ON SHEETS 8.

(38) CONSTRUCT A.C. OVERLAY. REFER TO TYPICAL SECTIONS ON SHEETS 8.

(40) CONSTRUCT EXTRUDED CURB PER CLARK COUNTY STD. DRAWING F18A.

(42) INSTALL FENCE AT LOCATIONS NOTED ON THE PLANS OR AS DIRECTED IN THE FIELD. SEE TYPICAL SECTION ON SHEET 12.

(64) EXISTING STORM PIPE AND/OR STRUCTURE TO REMAIN.

(66) ADJUST EXISTING MANHOLE CASTING WITH ADJUSTING RINGS/CATCH BASIN/VALVE BOX RIM TO FINISH GRADE.

(69) CONSTRUCT TYPE 1 CURB INLET PER DETAIL ON SHEET 18. INSTALL STORM PIPE AS SHOWN AND PER "STORM DRAINAGE DATA" INFORMATION TABLE THIS SHEET.

(73) CONSTRUCT ROADSIDE DITCH, GRADE TO DRAIN TO INLET.

(80) RELOCATE (R), PROTECT (P) ADJUST (A) EXISTING SANITARY SEWER CLEANOUT, WATER VALVE OR WATER METER BOX AND/OR SERVICE AS REQUIRED AND DIRECTED. ALL DISTURBED SERVICE LINES SHALL BE REPAIRED AS REQUIRED.

(81) EXISTING FIRE HYDRANT TO BE RELOCATED (R), PROTECTED (P), OR ADJUSTED (A). COORDINATE WITH CLARK PUBLIC UTILITIES.

(82) PROTECT EXISTING WATER LINE.

(90) RELOCATE (R), PROTECT (P), OR ADJUST (A) EXISTING IRRIGATION AS REQUIRED AND DIRECTED. ALL DISTURBED IRRIGATION SHALL BE REPAIRED AS REQUIRED.

FOR INFORMATIONAL PURPOSES ONLY
ALL PLAN DETAIL AND INFORMATION IS NOT SHOWN ON THIS 90% COMPLETED SET OF PLANS.
90% SUBMITTAL - JULY 2004

DESIGNED:	TSH
DRAWN:	NPR/RAF
CRP:	330222
HOR.	1" = 20'
VERT.	N/A
DATE:	7/2004
DWG:	
SHEET	85 OF 99

CALL 48 HOURS BEFORE YOU DIG
1-800-553-4344
"It's the Law"
NORTHWEST UTILITIES NOTIFICATION CENTER

Harper Houf Peterson Righellis Inc.
ENGINEERS PLANNERS SURVEYORS
1104 MAIN STREET, SUITE 100, VANCOUVER, WA 98660
TEL 360.750.1131 www.hhpr.com FAX 360.750.1141

DESIGN & ENGINEERING DIVISION

NE 88TH STREET INTERSECTIONS
NE 19TH CT & NE 20TH AVE

proud past, promising future
CLARK COUNTY WASHINGTON

P:\Crk-12 (NE 88th)\CRK12-DW\GSL\CRK12-SECTWEST2.DWG

SEE SHEET 63 FOR 88TH ST. IMPROVEMENTS

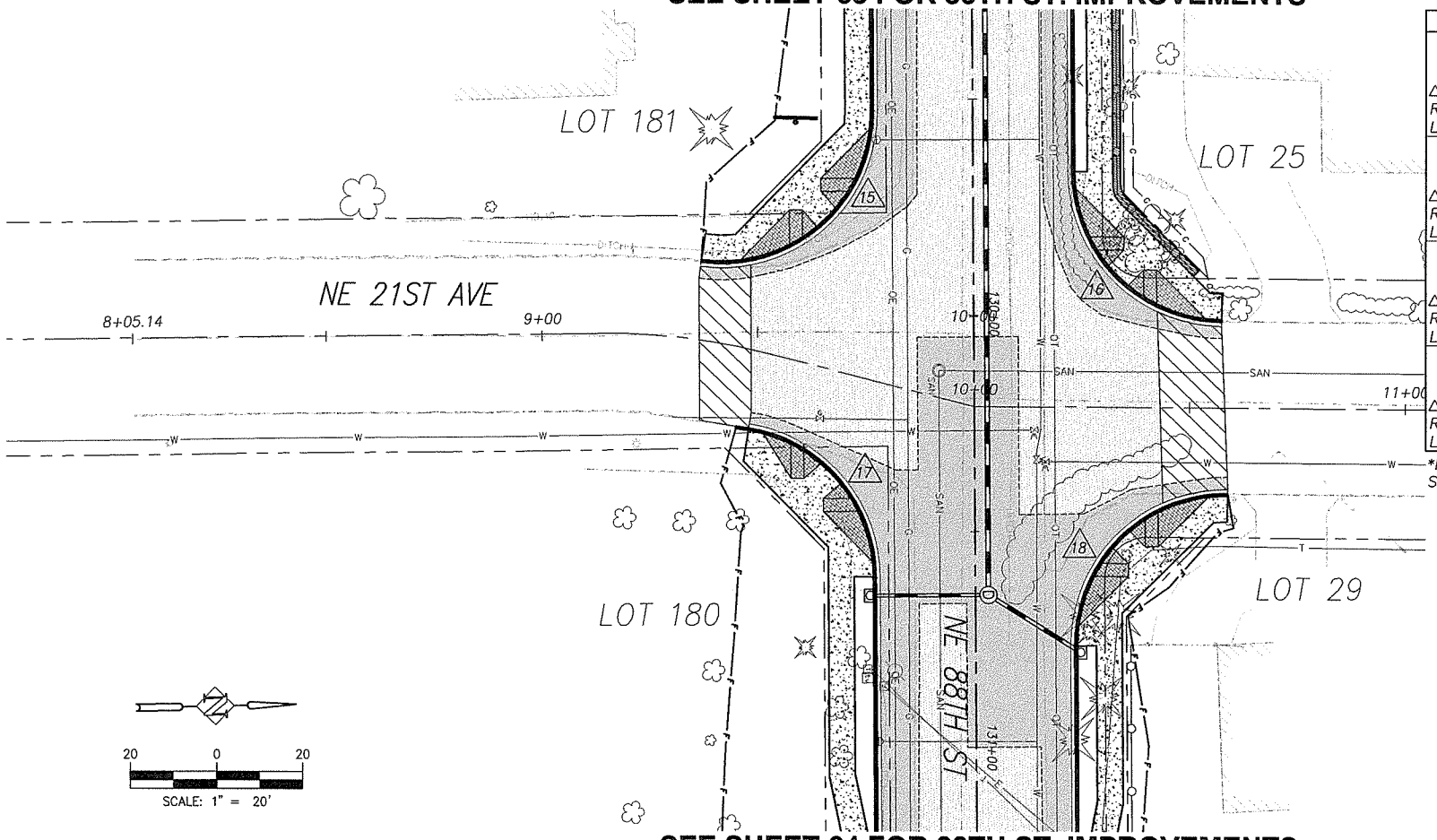

CURB RETURN TABLES		
15	DESCRIPTION	FL ELEV
	PC 129+52.68, 23.00' RT	230.11
	1/4 Δ	230.95
Δ = 98°10'53"	1/2 Δ	231.54
R = 35.00'	3/4 Δ	231.49
L = 59.98'	PT 9+32.59, 17.86' LT	230.80
16	DESCRIPTION	FL ELEV
	PC 129+66.90, 23.00' LT	230.91
	1/4 Δ	231.67
Δ = 89°16'24"	1/2 Δ	232.24
R = 35.00'	3/4 Δ	232.52
L = 54.53'	PT 10+57.30, 19.89' LT	232.51
17	DESCRIPTION	FL ELEV
	PC 9+50.71, 17.85' RT	231.83
	1/4 Δ	232.67
Δ = 80°28'09"	1/2 Δ	233.85
R = 35.00'	3/4 Δ	234.98
L = 49.16'	PT 130+60.36, 23.00' RT	235.70
18	DESCRIPTION	FL ELEV
	PC 10+58.93, 19.85' RT	232.47
	1/4 Δ	233.08
Δ = 91°05'39"	1/2 Δ	234.30
R = 35.00'	3/4 Δ	235.57
L = 55.65'	PT 130+76.65, 23.00' LT	236.34

*MATCH EXISTING FL ELEV
SEE SHEET 6 FOR CURB RAMP STAKING DATA

SEE SHEET 64 FOR 88TH ST. IMPROVEMENTS

SEE SHEET 65 FOR 88TH ST. IMPROVEMENTS

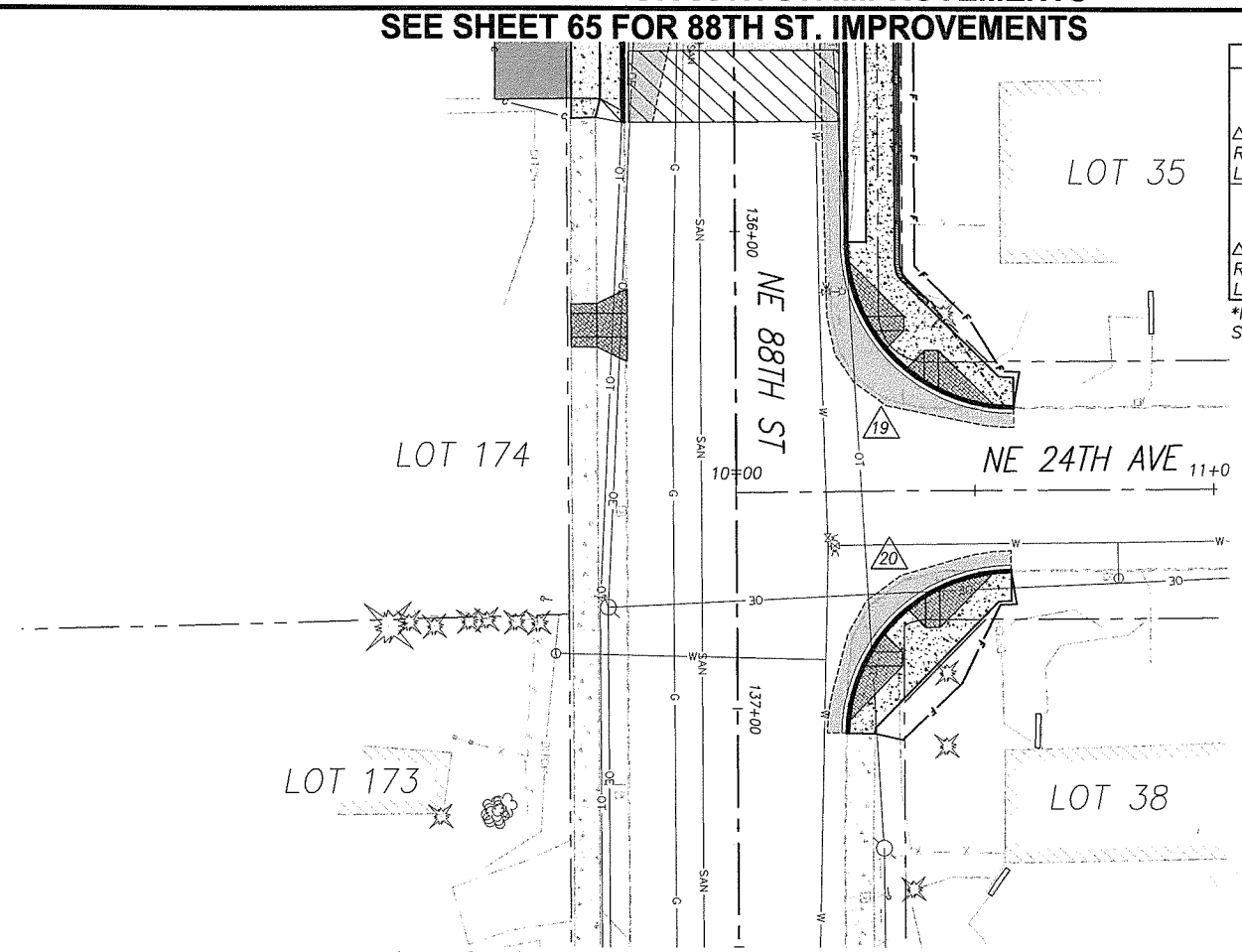

CURB RETURN TABLES		
19	DESCRIPTION	FL ELEV
	PC 136+02.22, 23.00' LT	241.72
	1/4 Δ	241.02
Δ = 90°17'53"	1/2 Δ	239.77
R = 35.00'	3/4 Δ	238.38
L = 55.16'	PT 10+58.26, 17.15' LT	236.99
20	DESCRIPTION	FL ELEV
	PC 10+57.40, 16.71' RT	237.05
	1/4 Δ	238.17
Δ = 88°17'49"	1/2 Δ	238.81
R = 35.00'	3/4 Δ	238.97
L = 53.94'	PT 137+05.29, 22.73' LT	238.68

*MATCH EXISTING FL ELEV
SEE SHEET 6 FOR CURB RAMP STAKING DATA

SEE SHEET 65 FOR 88TH ST. IMPROVEMENTS

CONSTRUCTION NOTES:

NOTES:
SEE SITE PREPARATION AND DEMOLITION PLAN SHEETS FOR STRUCTURES AND FRANCHISE UTILITY COMMENTS.

CONTRACTOR SHALL POTHOLE TO VERIFY ALL CROSSINGS PRIOR TO CONSTRUCTION TO ENSURE CLEARANCE OF UTILITIES. COORDINATE WITH APPROPRIATE UTILITY AGENCY.

6. RELOCATE (REL) IN KIND, REMOVE (R), OR PROTECT (P) EXISTING FENCE. COORDINATE REMOVALS AND RELOCATIONS WITH PROPERTY OWNER.
7. RELOCATE EXISTING MAILBOX PER WSDOT/APWA STANDARD PLAN H-12 UNLESS NOTED TO BE (P) PROTECTED.
8. REMOVE (R), PROTECT (P), OR TRIM (T) EXISTING SHRUB OR TREE AS SHOWN ON THE PLANS OR AS DIRECTED.
13. EXISTING UTILITY POLE, LIGHT POLE, AND/OR GUY WIRE TO BE RELOCATED (R) BY OTHERS OR PROTECTED (P). COORDINATE WITH APPROPRIATE UTILITY.
17. SAWCUT AND REMOVE EXISTING PAVEMENT AT ALL CONNECTIONS AND TRANSITIONS A MINIMUM OF 4' FROM FACE OF NEW CURB, 1' FROM EDGE OF EXISTING PAVEMENT, OR AS DIRECTED BY FIELD INSPECTOR.
30. CONSTRUCT DRIVEWAY PER DETAIL AND "DRIVEWAY APPROACH SCHEDULE" TABLE ON SHEET 11.
31. CONSTRUCT CONCRETE CURB AND GUTTER PER DETAIL SHEET 12.
32. CONSTRUCT CONCRETE SIDEWALK PER DETAIL SHEET 14.
34. MATCH NEW CURB TO EXISTING CURB. CURB GRADES ARE BASED ON A 0.5' EXPOSURE. TRANSITION CURB EXPOSURE ON NEW CURB TO MATCH EXISTING CURB AT LEAST 3-FEET PRIOR TO MATCH POINT. IF NECESSARY, SAWCUT EXISTING CURB TO CREATE A CLEAN, UNDISTURBED EDGE.
35. MATCH NEW SIDEWALK TO EXISTING SIDEWALK. TRANSITION NEW SIDEWALK WIDTH/LOCATION TO MATCH EXISTING WIDTH/LOCATION AT 5:1 PRIOR TO MATCH LINE. IF NECESSARY, SAWCUT EXISTING SIDEWALK TO CREATE A CLEAN, UNDISTURBED EDGE.
36. CONSTRUCT 6'X6' A.C. LEVEL LANDING AND 6' TRANSITION RAMP FROM END OF SIDEWALK TO SHOULDER. 0.25' MIN CLASS 'A' A.C. OVER 0.4' CRUSHED ROCK.
37. CONSTRUCT A.C. PAVEMENT RECONSTRUCTION/WIDENING. REFER TO TYPICAL SECTIONS ON SHEETS 8.
38. CONSTRUCT A.C. OVERLAY. REFER TO TYPICAL SECTIONS ON SHEETS 8.
40. CONSTRUCT EXTRUDED CURB PER CLARK COUNTY STD. DRAWING F18A.
42. INSTALL FENCE AT LOCATIONS NOTED ON THE PLANS OR AS DIRECTED IN THE FIELD. SEE TYPICAL SECTION ON SHEET 12.
64. EXISTING STORM PIPE AND/OR STRUCTURE TO REMAIN.
66. ADJUST EXISTING MANHOLE CASTING WITH ADJUSTING RINGS/CATCH BASIN/VALVE BOX RIM TO FINISH GRADE.
69. CONSTRUCT TYPE 1 CURB INLET PER DETAIL ON SHEET 18. INSTALL STORM PIPE AS SHOWN AND PER "STORM DRAINAGE DATA" INFORMATION TABLE THIS SHEET.
73. CONSTRUCT ROADSIDE DITCH, GRADE TO DRAIN TO INLET.
80. RELOCATE (R), PROTECT (P) ADJUST (A) EXISTING SANITARY SEWER CLEANOUT, WATER VALVE OR WATER METER BOX AND/OR SERVICE AS REQUIRED AND DIRECTED. ALL DISTURBED SERVICE LINES SHALL BE REPAIRED AS REQUIRED.
81. EXISTING FIRE HYDRANT TO BE RELOCATED (R), PROTECTED (P), OR ADJUSTED (A). COORDINATE WITH CLARK PUBLIC UTILITIES.
82. PROTECT EXISTING WATER LINE.
90. RELOCATE (R), PROTECT (P), OR ADJUST (A) EXISTING IRRIGATION AS REQUIRED AND DIRECTED. ALL DISTURBED IRRIGATION SHALL BE REPAIRED AS REQUIRED.

FOR INFORMATIONAL PURPOSES ONLY
ALL PLAN DETAIL AND INFORMATION IS NOT SHOWN ON THIS 90% COMPLETED SET OF PLANS.
90% SUBMITTAL - JULY 2004

DESIGNED:	TSH
DRAWN:	NPR/RAF
CRP:	330222
HOR.	1" = 20'
VERT.	N/A
DATE:	7/2004
DWG:	
SHEET	86 OF 99

CALL 48 HOURS BEFORE YOU DIG
1-800-553-4344
"It's the Law"
NORTHWEST UTILITIES NOTIFICATION CENTER

Harper Houf Peterson Righellis Inc.
ENGINEERS PLANNERS SURVEYORS
1104 MAIN STREET, SUITE 100, VANCOUVER, WA 98660
TEL 360.750.1131 www.hhpr.com FAX 360.750.1141

DESIGN & ENGINEERING DIVISION

NE 88TH STREET INTERSECTIONS
NE 21ST AVE & NE 24TH AVE

CLARK COUNTY WASHINGTON
proud past, promising future

P:\Clk-12 (NE 88th)\CRK12-DWGS\ Crk12-1SECTWEST2.DWG

SEE SHEET 67 FOR 88TH ST IMPROVEMENTS

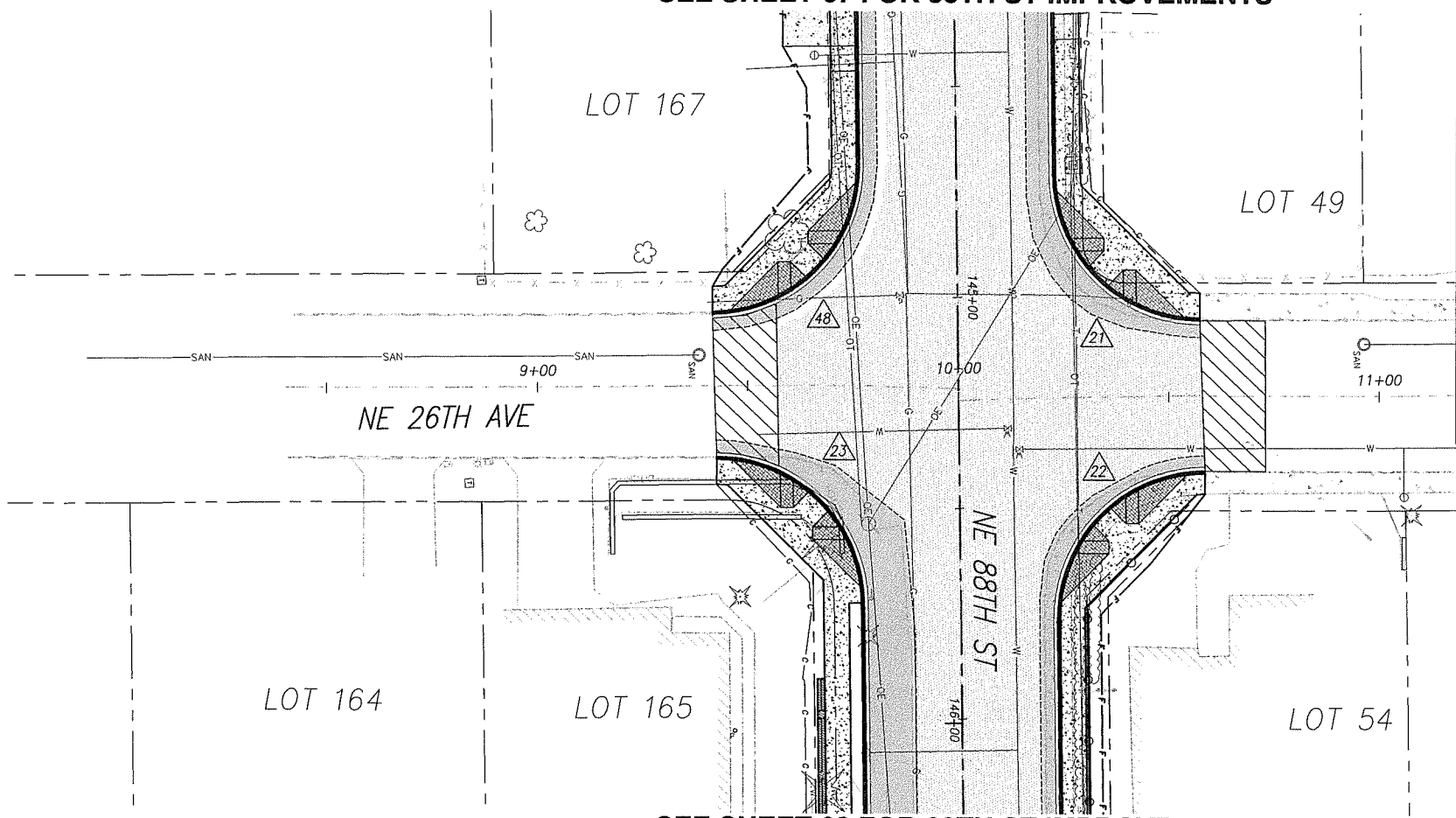

CURB RETURN TABLES		
21	DESCRIPTION	FL ELEV
	PC 144+71.18, 23.00' LT	249.34
	1/4 Δ	249.18
Δ = 89°26'52"	1/2 Δ	248.57
R = 35.00'	3/4 Δ	247.86
L = 54.64'	PT 10+57.42, 18.08' LT	247.39
22	DESCRIPTION	FL ELEV
	PC 10+58.58, 17.67' RT	247.31
	1/4 Δ	247.80
Δ = 90°33'08"	1/2 Δ	248.48
R = 35.00'	3/4 Δ	249.04
L = 55.32'	PT 145+76.92, 23.00' LT	249.14
23	DESCRIPTION	FL ELEV
	PC 9+42.30, 23.00' RT	248.38
	1/4 Δ	248.66
Δ = 89°16'44"	1/2 Δ	249.16
R = 35.00'	3/4 Δ	249.58
L = 54.54	PT 145+72.26, 23.00' RT	249.64
48	DESCRIPTION	FL ELEV
	PC 144+68.36, 23.00' RT	249.79
	1/4 Δ	249.68
Δ = 90°17'34"	1/2 Δ	249.20
R = 35.00'	3/4 Δ	248.66
L = 55.16	PT 9+41.72, 17.07' LT	248.38

*MATCH EXISTING FL ELEV
SEE SHEET 6 FOR CURB RAMP STAKING DATA

SEE SHEET 68 FOR 88TH ST IMPROVEMENTS

SEE SHEET 68 FOR 88TH ST IMPROVEMENTS

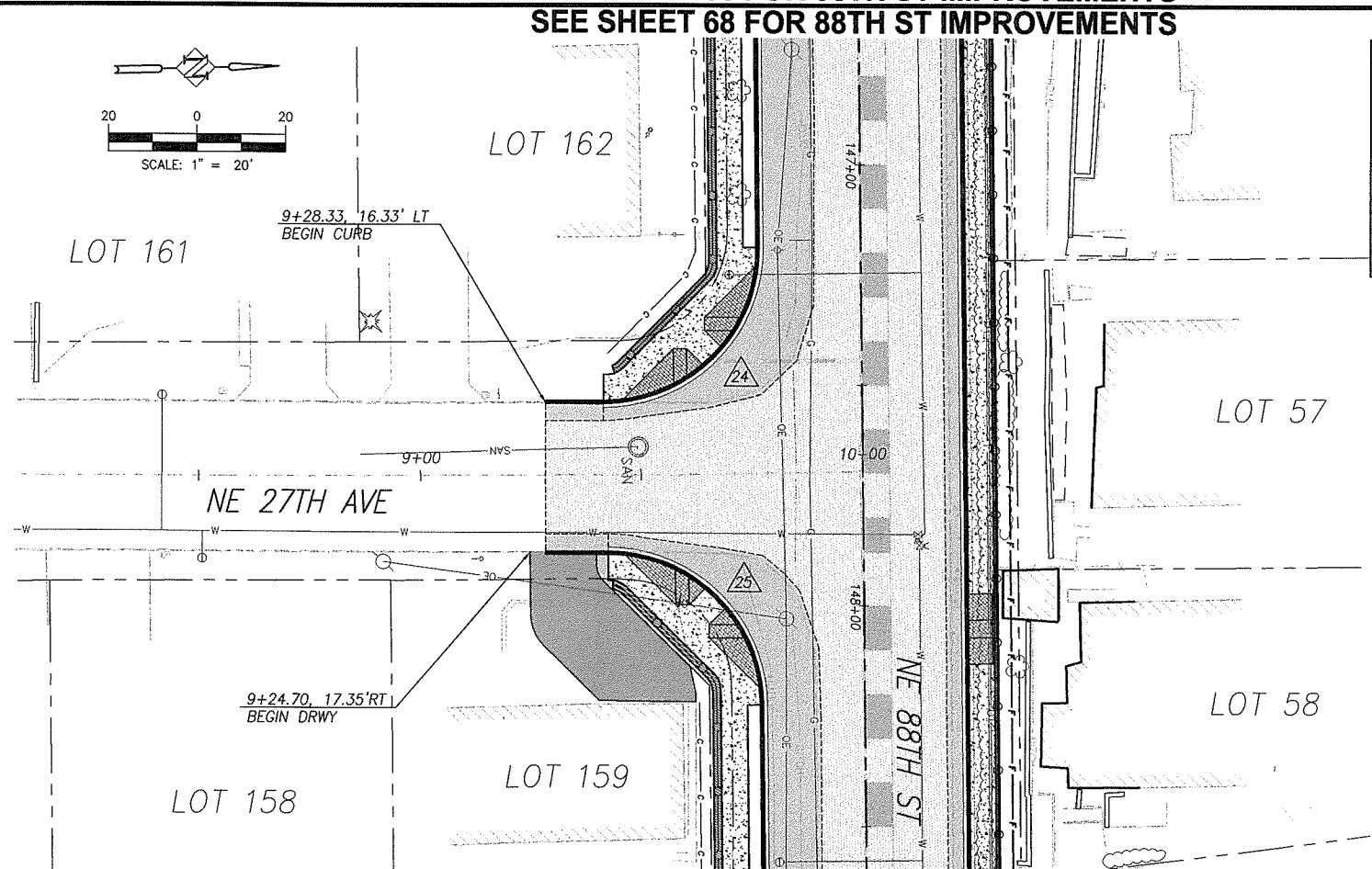

CURB RETURN TABLES		
24	DESCRIPTION	FL ELEV
	PC 147+18.43, 23.00' LT	246.58
	1/4 Δ	246.27
Δ = 90°38'54"	1/2 Δ	245.77
R = 35.00'	3/4 Δ	246.23
L = 55.37'	PT 9+41.53, 12.89' LT	246.69
25	DESCRIPTION	FL ELEV
	PC 9+42.48, 20.81' RT	246.40
	1/4 Δ	245.53
Δ = 90°25'17"	1/2 Δ	245.96
R = 35.00'	3/4 Δ	244.64
L = 54.62	PT 148+22.43, 23.00' LT	244.37

*MATCH EXISTING FL ELEV
SEE SHEET 6 FOR CURB RAMP STAKING DATA

SEE SHEET 68 FOR 88TH ST IMPROVEMENTS

CONSTRUCTION NOTES:

NOTES:
SEE SITE PREPARATION AND DEMOLITION PLAN SHEETS FOR STRUCTURES AND FRANCHISE UTILITY COMMENTS.

CONTRACTOR SHALL POTHOLE TO VERIFY ALL CROSSINGS PRIOR TO CONSTRUCTION TO ENSURE CLEARANCE OF UTILITIES. COORDINATE WITH APPROPRIATE UTILITY AGENCY.

(6) RELOCATE (REL) IN KIND, REMOVE (R), OR PROTECT (P) EXISTING FENCE. COORDINATE REMOVALS AND RELOCATIONS WITH PROPERTY OWNER.

(7) RELOCATE EXISTING MAILBOX PER WSDOT/APWA STANDARD PLAN H-12 UNLESS NOTED TO BE (P) PROTECTED.

(8) REMOVE (R), PROTECT (P), OR TRIM (T) EXISTING SHRUB OR TREE AS SHOWN ON THE PLANS OR AS DIRECTED.

(13) EXISTING UTILITY POLE, LIGHT POLE, AND/OR GUY WIRE TO BE RELOCATED (R) BY OTHERS OR PROTECTED (P). COORDINATE WITH APPROPRIATE UTILITY.

(17) SAWCUT AND REMOVE EXISTING PAVEMENT AT ALL CONNECTIONS AND TRANSITIONS A MINIMUM OF 4' FROM FACE OF NEW CURB, 1' FROM EDGE OF EXISTING PAVEMENT, OR AS DIRECTED BY FIELD INSPECTOR.

(30) CONSTRUCT DRIVEWAY PER DETAIL AND "DRIVEWAY APPROACH SCHEDULE" TABLE ON SHEET 11.

(31) CONSTRUCT CONCRETE CURB AND GUTTER PER DETAIL SHEET 12.

(32) CONSTRUCT CONCRETE SIDEWALK PER DETAIL SHEET 14.

(34) MATCH NEW CURB TO EXISTING CURB. CURB GRADES ARE BASED ON A 0.5' EXPOSURE. TRANSITION CURB EXPOSURE ON NEW CURB TO MATCH EXISTING CURB AT LEAST 3-FEET PRIOR TO MATCH POINT. IF NECESSARY, SAWCUT EXISTING CURB TO CREATE A CLEAN, UNDISTURBED EDGE.

(35) MATCH NEW SIDEWALK TO EXISTING SIDEWALK. TRANSITION NEW SIDEWALK WIDTH/LOCATION TO MATCH EXISTING WIDTH/LOCATION AT 5:1 PRIOR TO MATCH LINE. IF NECESSARY, SAWCUT EXISTING SIDEWALK TO CREATE A CLEAN, UNDISTURBED EDGE.

(36) CONSTRUCT 6'X6' A.C. LEVEL LANDING AND 6' TRANSITION RAMP FROM END OF SIDEWALK TO SHOULDER. 0.25' MIN CLASS 'A' A.C. OVER 0.4' CRUSHED ROCK.

(37) CONSTRUCT A.C. PAVEMENT RECONSTRUCTION/WIDENING. REFER TO TYPICAL SECTIONS ON SHEETS 8.

(38) CONSTRUCT A.C. OVERLAY. REFER TO TYPICAL SECTIONS ON SHEETS 8.

(40) CONSTRUCT EXTRUDED CURB PER CLARK COUNTY STD. DRAWING F18A.

(42) INSTALL FENCE AT LOCATIONS NOTED ON THE PLANS OR AS DIRECTED IN THE FIELD. SEE TYPICAL SECTION ON SHEET 12.

(64) EXISTING STORM PIPE AND/OR STRUCTURE TO REMAIN.

(66) ADJUST EXISTING MANHOLE CASTING WITH ADJUSTING RINGS/CATCH BASIN/VALVE BOX RIM TO FINISH GRADE.

(69) CONSTRUCT TYPE 1 CURB INLET PER DETAIL ON SHEET 18. INSTALL STORM PIPE AS SHOWN AND PER "STORM DRAINAGE DATA" INFORMATION TABLE THIS SHEET.

(73) CONSTRUCT ROADSIDE DITCH, GRADE TO DRAIN TO INLET.

(80) RELOCATE (R), PROTECT (P) ADJUST (A) EXISTING SANITARY SEWER CLEANOUT, WATER VALVE OR WATER METER BOX AND/OR SERVICE AS REQUIRED AND DIRECTED. ALL DISTURBED SERVICE LINES SHALL BE REPAIRED AS REQUIRED.

(81) EXISTING FIRE HYDRANT TO BE RELOCATED (R), PROTECTED (P), OR ADJUSTED (A). COORDINATE WITH CLARK PUBLIC UTILITIES.

(82) PROTECT EXISTING WATER LINE.

(90) RELOCATE (R), PROTECT (P), OR ADJUST (A) EXISTING IRRIGATION AS REQUIRED AND DIRECTED. ALL DISTURBED IRRIGATION SHALL BE REPAIRED AS REQUIRED.

FOR INFORMATIONAL PURPOSES ONLY
ALL PLAN DETAIL AND INFORMATION IS NOT SHOWN ON THIS 90% COMPLETED SET OF PLANS.
90% SUBMITTAL - JULY 2004

DESIGNED:	TSH
DRAWN:	NPR/RAF
CRP:	330222
HOR.	1" = 20'
VERT.	N/A
DATE:	7/2004
DWG:	
SHEET	87 OF 99

CALL 48 HOURS BEFORE YOU DIG
1-800-553-4344
"It's the Law"
NORTHWEST UTILITIES NOTIFICATION CENTER

Harper Houf Peterson Righellis Inc.
ENGINEERS PLANNERS SURVEYORS
1104 MAIN STREET, SUITE 100, VANCOUVER, WA 98660
TEL 360.750.1131 www.hhpr.com FAX 360.750.1141

DESIGN & ENGINEERING DIVISION

NE 88TH STREET INTERSECTIONS
NE 26TH AVE & NE 27TH AVE

CLARK COUNTY WASHINGTON
proud past, promising future

P:\Crk-12 (NE 88th)\CRK12-DWGS\Crk12-ISECTEAST1.DWG

SEE SHEET 69 FOR 88TH ST IMPROVEMENTS

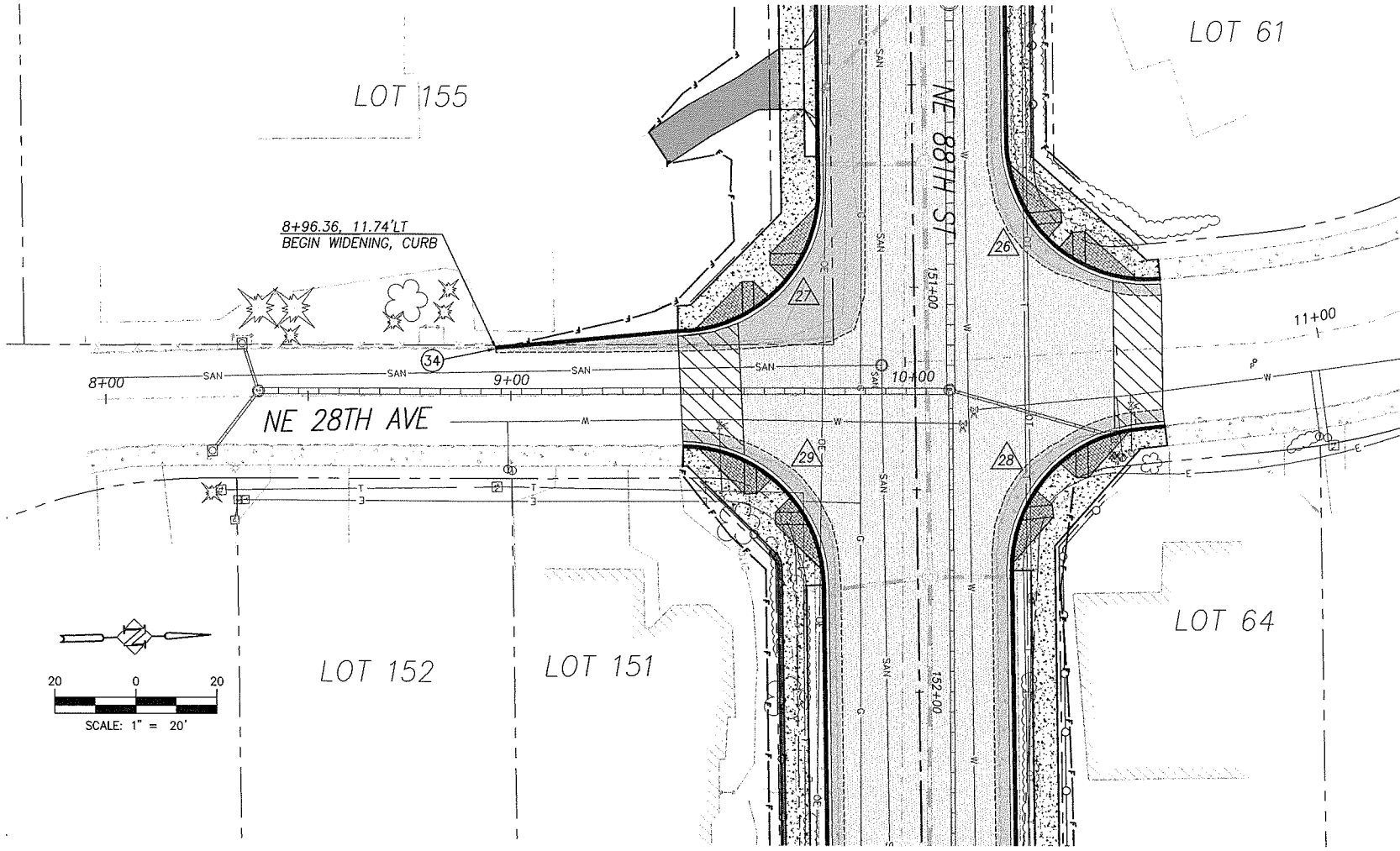

SEE SHEET 69 FOR 88TH ST IMPROVEMENTS

CURB RETURN TABLES		
26	DESCRIPTION	FL ELEV
	PC 150+63.97, 23.00' LT	241.60
	1/4 △	241.59
△ = 95°04'53"	1/2 △	241.35
R = 35.00'	3/4 △	241.05
L = 58.06'	PT 10+62.77, 17.86' LT	240.86
27	DESCRIPTION	FL ELEV
	PC 150+75.31, 23.00' RT	241.69
	1/4 △	241.71
△ = 90°43'48"	1/2 △	241.52
R = 35.00'	3/4 △	241.13
L = 55.42'	PT 9+41.31, 11.10' LT	240.68
28	DESCRIPTION	FL ELEV
	PC 10+53.21, 18.07' RT	240.96
	1/4 △	241.28
△ = 84°57'07"	1/2 △	242.03
R = 35.00'	3/4 △	242.84
L = 51.15'	PT 151+7031, 23.00' LT	243.33
29	DESCRIPTION	FL ELEV
	PC 9+42.74, 16.90' RT	240.26
	1/4 △	240.86
△ = 89°08'42"	1/2 △	241.86
R = 35.00'	3/4 △	242.84
L = 54.46'	PT 151+73.32, 23.00' RT	243.41

*MATCH EXISTING FL ELEV
SEE SHEET 6 FOR CURB RAMP STAKING DATA

CONSTRUCTION NOTES:

NOTES:
SEE SITE PREPARATION AND DEMOLITION PLAN SHEETS FOR STRUCTURES AND FRANCHISE UTILITY COMMENTS.

CONTRACTOR SHALL POTHOLE TO VERIFY ALL CROSSINGS PRIOR TO CONSTRUCTION TO ENSURE CLEARANCE OF UTILITIES. COORDINATE WITH APPROPRIATE UTILITY AGENCY.

(6) RELOCATE (REL) IN KIND, REMOVE (R), OR PROTECT (P) EXISTING FENCE. COORDINATE REMOVALS AND RELOCATIONS WITH PROPERTY OWNER.

(7) RELOCATE EXISTING MAILBOX PER WSDOT/APWA STANDARD PLAN H-12 UNLESS NOTED TO BE (P) PROTECTED.

(8) REMOVE (R), PROTECT (P), OR TRIM (T) EXISTING SHRUB OR TREE AS SHOWN ON THE PLANS OR AS DIRECTED.

(13) EXISTING UTILITY POLE, LIGHT POLE, AND/OR GUY WIRE TO BE RELOCATED (R) BY OTHERS OR PROTECTED (P). COORDINATE WITH APPROPRIATE UTILITY.

(17) SAWCUT AND REMOVE EXISTING PAVEMENT AT ALL CONNECTIONS AND TRANSITIONS A MINIMUM OF 4' FROM FACE OF NEW CURB, 1' FROM EDGE OF EXISTING PAVEMENT, OR AS DIRECTED BY FIELD INSPECTOR.

(30) CONSTRUCT DRIVEWAY PER DETAIL AND "DRIVEWAY APPROACH SCHEDULE" TABLE ON SHEET 11.

(31) CONSTRUCT CONCRETE CURB AND GUTTER PER DETAIL SHEET 12.

(32) CONSTRUCT CONCRETE SIDEWALK PER DETAIL SHEET 14.

(34) MATCH NEW CURB TO EXISTING CURB. CURB GRADES ARE BASED ON A 0.5' EXPOSURE. TRANSITION CURB EXPOSURE ON NEW CURB TO MATCH EXISTING CURB AT LEAST 3-FEET PRIOR TO MATCH POINT. IF NECESSARY, SAWCUT EXISTING CURB TO CREATE A CLEAN, UNDISTURBED EDGE.

(35) MATCH NEW SIDEWALK TO EXISTING SIDEWALK. TRANSITION NEW SIDEWALK WIDTH/LOCATION TO MATCH EXISTING WIDTH/LOCATION AT 5:1 PRIOR TO MATCH LINE. IF NECESSARY, SAWCUT EXISTING SIDEWALK TO CREATE A CLEAN, UNDISTURBED EDGE.

(36) CONSTRUCT 6'X6' A.C. LEVEL LANDING AND 6' TRANSITION RAMP FROM END OF SIDEWALK TO SHOULDER. 0.25' MIN CLASS 'A' A.C. OVER 0.4' CRUSHED ROCK.

(37) CONSTRUCT A.C. PAVEMENT RECONSTRUCTION/WIDENING. REFER TO TYPICAL SECTIONS ON SHEETS 8.

(38) CONSTRUCT A.C. OVERLAY. REFER TO TYPICAL SECTIONS ON SHEETS 8.

(40) CONSTRUCT EXTRUDED CURB PER CLARK COUNTY STD. DRAWING F18A.

(42) INSTALL FENCE AT LOCATIONS NOTED ON THE PLANS OR AS DIRECTED IN THE FIELD. SEE TYPICAL SECTION ON SHEET 12.

(64) EXISTING STORM PIPE AND/OR STRUCTURE TO REMAIN.

(66) ADJUST EXISTING MANHOLE CASTING WITH ADJUSTING RINGS/CATCH BASIN/VALVE BOX RIM TO FINISH GRADE.

(69) CONSTRUCT TYPE 1 CURB INLET PER DETAIL ON SHEET 18. INSTALL STORM PIPE AS SHOWN AND PER "STORM DRAINAGE DATA" INFORMATION TABLE THIS SHEET.

(73) CONSTRUCT ROADSIDE DITCH, GRADE TO DRAIN TO INLET.

(80) RELOCATE (R), PROTECT (P) ADJUST (A) EXISTING SANITARY SEWER CLEANOUT, WATER VALVE OR WATER METER BOX AND/OR SERVICE AS REQUIRED AND DIRECTED. ALL DISTURBED SERVICE LINES SHALL BE REPAIRED AS REQUIRED.

(81) EXISTING FIRE HYDRANT TO BE RELOCATED (R), PROTECTED (P), OR ADJUSTED (A). COORDINATE WITH CLARK PUBLIC UTILITIES.

(82) PROTECT EXISTING WATER LINE.

(90) RELOCATE (R), PROTECT (P), OR ADJUST (A) EXISTING IRRIGATION AS REQUIRED AND DIRECTED. ALL DISTURBED IRRIGATION SHALL BE REPAIRED AS REQUIRED.

FOR INFORMATIONAL PURPOSES ONLY
ALL PLAN DETAIL AND INFORMATION IS NOT SHOWN ON THIS 90% COMPLETED SET OF PLANS.
90% SUBMITTAL - JULY 2004

DESIGNED:	TSH
DRAWN:	NPR/RAF
CRP:	330222
HOR.	1" = 20'
VERT.	N/A
DATE:	7/2004
DWG:	
SHEET	88 OF 99

CALL 48 HOURS BEFORE YOU DIG
1-800-553-4344
"It's the Law"
NORTHWEST UTILITIES NOTIFICATION CENTER

Harper Houf Peterson Righellis Inc.
ENGINEERS PLANNERS SURVEYORS
1104 MAIN STREET, VANCOUVER, WA 98660
TEL 360.750.1131 Suite 100, www.hhpr.com FAX 360.750.1141

DESIGN & ENGINEERING DIVISION

NE 88TH STREET INTERSECTIONS
NE 28TH AVENUE

proud past, promising future
CLARK COUNTY WASHINGTON

P:\Clrk-12 NE 88th\ICRK12-DWGS\ Crk12-\SECTEAST1.DWG

SEE SHEET 69 FOR 88TH ST IMPROVEMENTS

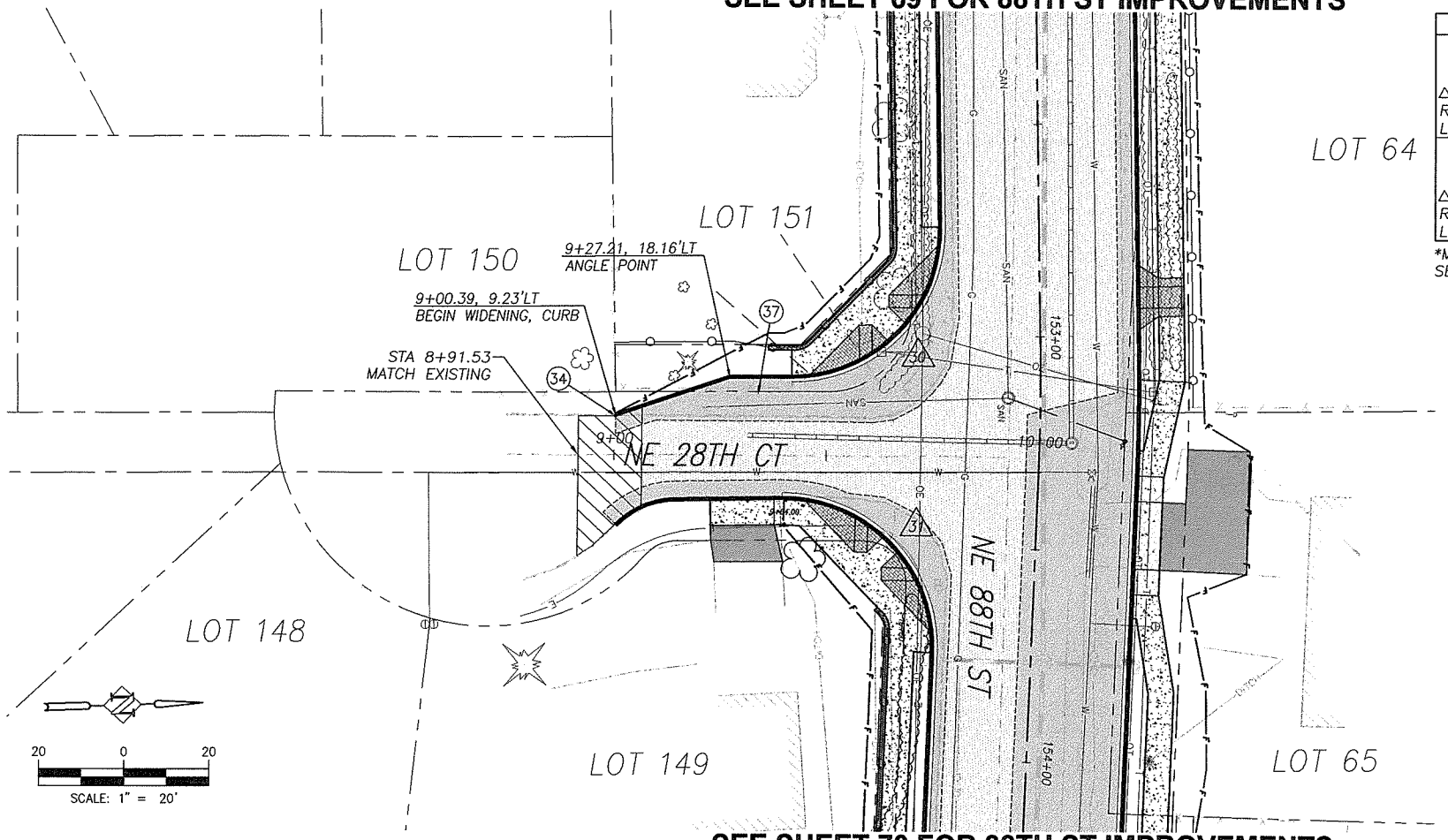

CURB RETURN TABLES		
30	DESCRIPTION	FL ELEV
	PC 152+73.89, 23.00' RT	246.57
	1/4 Δ	247.02
Δ = 90°43'48"	1/2 Δ	247.16
R = 35.00'	3/4 Δ	246.58
L = 55.42'	PT 9+41.77, 18.28' LT	245.28
31	DESCRIPTION	FL ELEV
	PC 9+40.20, 9.73' RT	245.28
	1/4 Δ	246.93
Δ = 92°20'26"	1/2 Δ	248.34
R = 35.00'	3/4 Δ	249.40
L = 56.41'	PT 153+75.22, 23.00' RT	250.10

*MATCH EXISTING FL ELEV
SEE SHEET 6 FOR CURB RAMP STAKING DATA

SEE SHEET 70 FOR 88TH ST IMPROVEMENTS

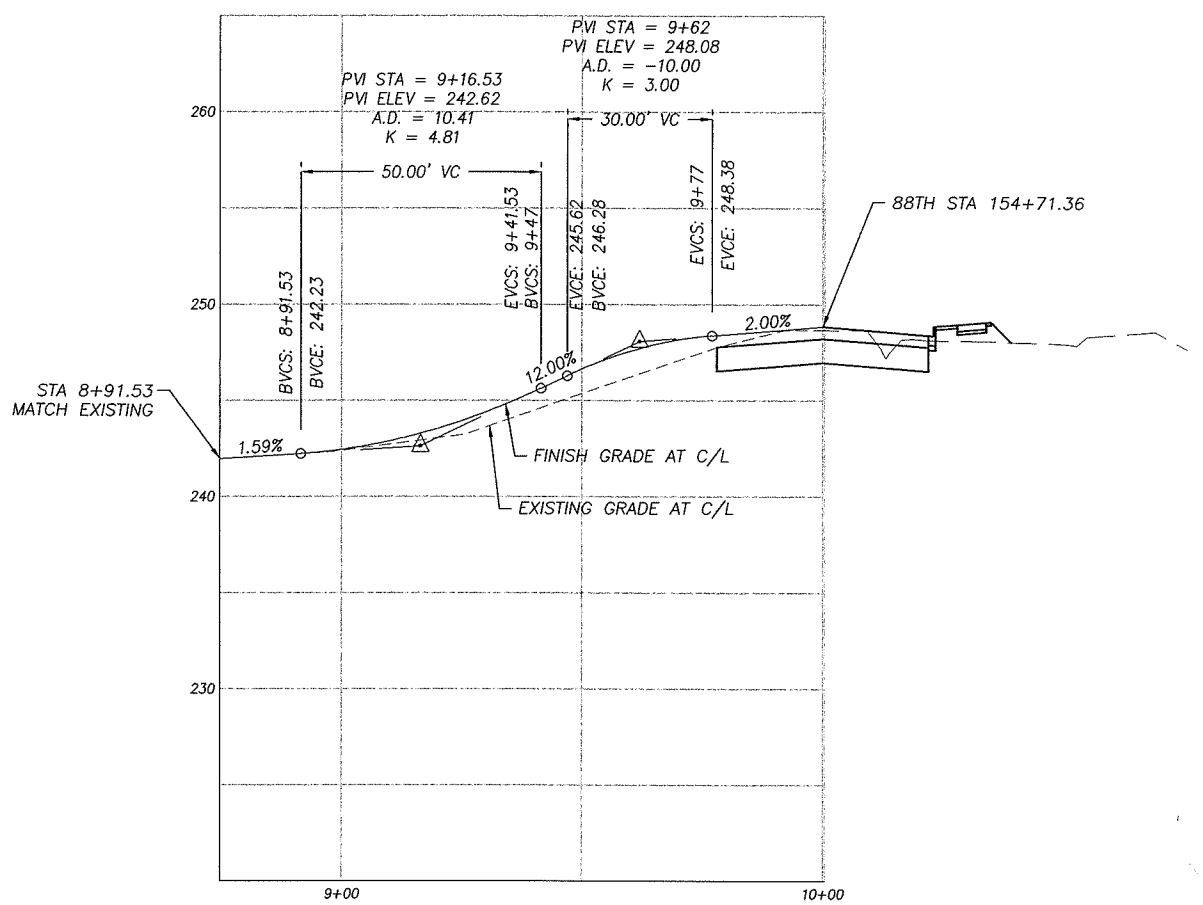

CONSTRUCTION NOTES:

NOTES:
SEE SITE PREPARATION AND DEMOLITION PLAN SHEETS FOR STRUCTURES AND FRANCHISE UTILITY COMMENTS.

CONTRACTOR SHALL POTHOLE TO VERIFY ALL CROSSINGS PRIOR TO CONSTRUCTION TO ENSURE CLEARANCE OF UTILITIES. COORDINATE WITH APPROPRIATE UTILITY AGENCY.

(6) RELOCATE (REL) IN KIND, REMOVE (R), OR PROTECT (P) EXISTING FENCE. COORDINATE REMOVALS AND RELOCATIONS WITH PROPERTY OWNER.

(7) RELOCATE EXISTING MAILBOX PER WSDOT/APWA STANDARD PLAN H-12 UNLESS NOTED TO BE (P) PROTECTED.

(8) REMOVE (R), PROTECT (P), OR TRIM (T) EXISTING SHRUB OR TREE AS SHOWN ON THE PLANS OR AS DIRECTED.

(13) EXISTING UTILITY POLE, LIGHT POLE, AND/OR GUY WIRE TO BE RELOCATED (R) BY OTHERS OR PROTECTED (P). COORDINATE WITH APPROPRIATE UTILITY.

(17) SAWCUT AND REMOVE EXISTING PAVEMENT AT ALL CONNECTIONS AND TRANSITIONS A MINIMUM OF 4' FROM FACE OF NEW CURB, 1' FROM EDGE OF EXISTING PAVEMENT, OR AS DIRECTED BY FIELD INSPECTOR.

(30) CONSTRUCT DRIVEWAY PER DETAIL AND "DRIVEWAY APPROACH SCHEDULE" TABLE ON SHEET 11.

(31) CONSTRUCT CONCRETE CURB AND GUTTER PER DETAIL SHEET 12.

(32) CONSTRUCT CONCRETE SIDEWALK PER DETAIL SHEET 14.

(34) MATCH NEW CURB TO EXISTING CURB. CURB GRADES ARE BASED ON A 0.5' EXPOSURE. TRANSITION CURB EXPOSURE ON NEW CURB TO MATCH EXISTING CURB AT LEAST 3-FEET PRIOR TO MATCH POINT. IF NECESSARY, SAWCUT EXISTING CURB TO CREATE A CLEAN, UNDISTURBED EDGE.

(35) MATCH NEW SIDEWALK TO EXISTING SIDEWALK. TRANSITION NEW SIDEWALK WIDTH/LOCATION TO MATCH EXISTING WIDTH/LOCATION AT 5:1 PRIOR TO MATCH LINE. IF NECESSARY, SAWCUT EXISTING SIDEWALK TO CREATE A CLEAN, UNDISTURBED EDGE.

(36) CONSTRUCT 6'X6' A.C. LEVEL LANDING AND 6' TRANSITION RAMP FROM END OF SIDEWALK TO SHOULDER. 0.25' MIN CLASS 'A' A.C. OVER 0.4' CRUSHED ROCK.

(37) CONSTRUCT A.C. PAVEMENT RECONSTRUCTION/WIDENING. REFER TO TYPICAL SECTIONS ON SHEETS 8.

(38) CONSTRUCT A.C. OVERLAY. REFER TO TYPICAL SECTIONS ON SHEETS 8.

(40) CONSTRUCT EXTRUDED CURB PER CLARK COUNTY STD. DRAWING F18A.

(42) INSTALL FENCE AT LOCATIONS NOTED ON THE PLANS OR AS DIRECTED IN THE FIELD. SEE TYPICAL SECTION ON SHEET 12.

(64) EXISTING STORM PIPE AND/OR STRUCTURE TO REMAIN.

(66) ADJUST EXISTING MANHOLE CASTING WITH ADJUSTING RINGS/CATCH BASIN/VALVE BOX RIM TO FINISH GRADE.

(69) CONSTRUCT TYPE 1 CURB INLET PER DETAIL ON SHEET 18. INSTALL STORM PIPE AS SHOWN AND PER "STORM DRAINAGE DATA" INFORMATION TABLE THIS SHEET.

(73) CONSTRUCT ROADSIDE DITCH, GRADE TO DRAIN TO INLET.

(80) RELOCATE (R), PROTECT (P) ADJUST (A) EXISTING SANITARY SEWER CLEANOUT, WATER VALVE OR WATER METER BOX AND/OR SERVICE AS REQUIRED AND DIRECTED. ALL DISTURBED SERVICE LINES SHALL BE REPAIRED AS REQUIRED.

(81) EXISTING FIRE HYDRANT TO BE RELOCATED (R), PROTECTED (P), OR ADJUSTED (A). COORDINATE WITH CLARK PUBLIC UTILITIES.

(82) PROTECT EXISTING WATER LINE.

(90) RELOCATE (R), PROTECT (P), OR ADJUST (A) EXISTING IRRIGATION AS REQUIRED AND DIRECTED. ALL DISTURBED IRRIGATION SHALL BE REPAIRED AS REQUIRED.

FOR INFORMATIONAL PURPOSES ONLY
ALL PLAN DETAIL AND INFORMATION IS NOT SHOWN ON THIS 90% COMPLETED SET OF PLANS.
90% SUBMITTAL - JULY 2004

DESIGNED:	TSH
DRAWN:	NPR/RAF
CRP:	330222
HOR.	1" = 20'
VERT.	N/A
DATE:	7/2004
DWG:	
SHEET	89 OF 99

CALL 48 HOURS BEFORE YOU DIG
1-800-553-4344
"It's the Law"
NORTHWEST UTILITIES NOTIFICATION CENTER

Harper Houf Peterson Righellis Inc.
ENGINEERS PLANNERS SURVEYORS
1104 MAIN STREET, SUITE 100, VANCOUVER, WA 98660
TEL 360.750.1131 www.hhpr.com FAX 360.750.1141

DESIGN & ENGINEERING DIVISION

NE 88TH STREET INTERSECTIONS
NE 28TH COURT

proud past, promising future
CLARK COUNTY WASHINGTON

P:\Ck-12 (NE 88th)\CRK12-DWGS\ Ck12-ISECTEAST1.DWG

SEE SHEET 70 FOR 88TH ST IMPROVEMENTS

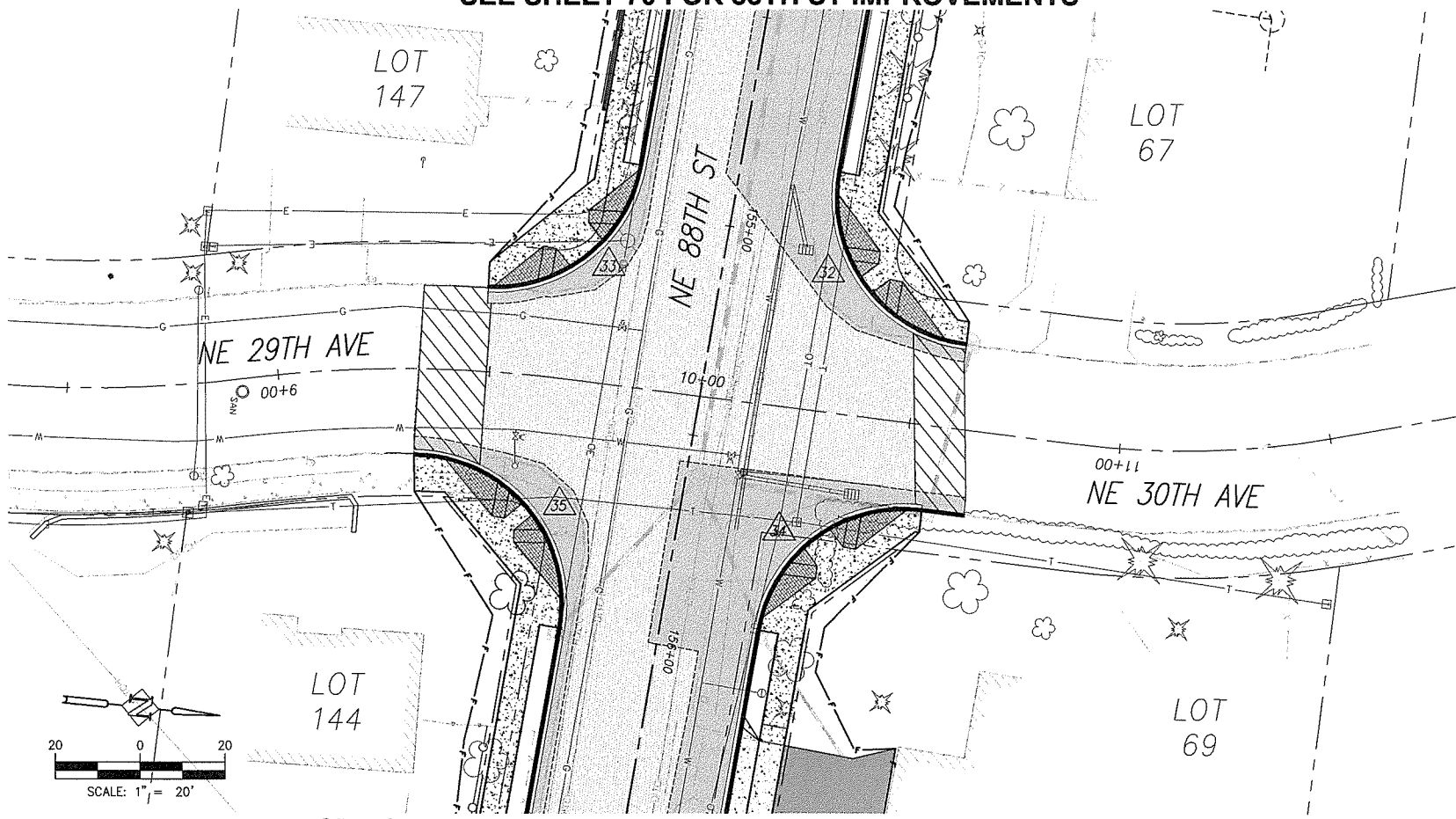

CURB RETURN TABLES		
32	DESCRIPTION	FL ELEV
	PC 154+82.89, 23.00' LT	254.09
	1/4 Δ	254.61
Δ = 93°04'39"	1/2 Δ	255.13
R = 35.00'	3/4 Δ	255.66
L = 56.86'	PT 10+60.94, 19.86' LT	256.18
33	DESCRIPTION	FL ELEV
	PC 154+89.40, 23.00' RT	254.32
	1/4 Δ	254.79
Δ = 82°50'15"	1/2 Δ	255.20
R = 35.00'	3/4 Δ	255.37
L = 50.60'	PT 9+48.53, 19.72' LT	255.28
34	DESCRIPTION	FL ELEV
	PC 10+55.33, 19.74' RT	256.20
	1/4 Δ	256.40
Δ = 87°07'47"	1/2 Δ	256.96
R = 35.00'	3/4 Δ	257.56
L = 53.22'	PT155+92.62, 23.00' LT	258.16
35	DESCRIPTION	FL ELEV
	PC 9+32.24, 20.01' RT	254.75
	1/4 Δ	255.48
Δ = 100°03'04"	1/2 Δ	256.59
R = 35.00'	3/4 Δ	257.69
L = 61.12'	PT 156+00.22, 23.00' RT	258.44

*MATCH EXISTING FL ELEV
SEE SHEET 6 FOR CURB RAMP STAKING DATA

SEE SHEET 70 FOR 88TH ST IMPROVEMENTS

SEE SHEET 71 FOR 88TH ST IMPROVEMENTS

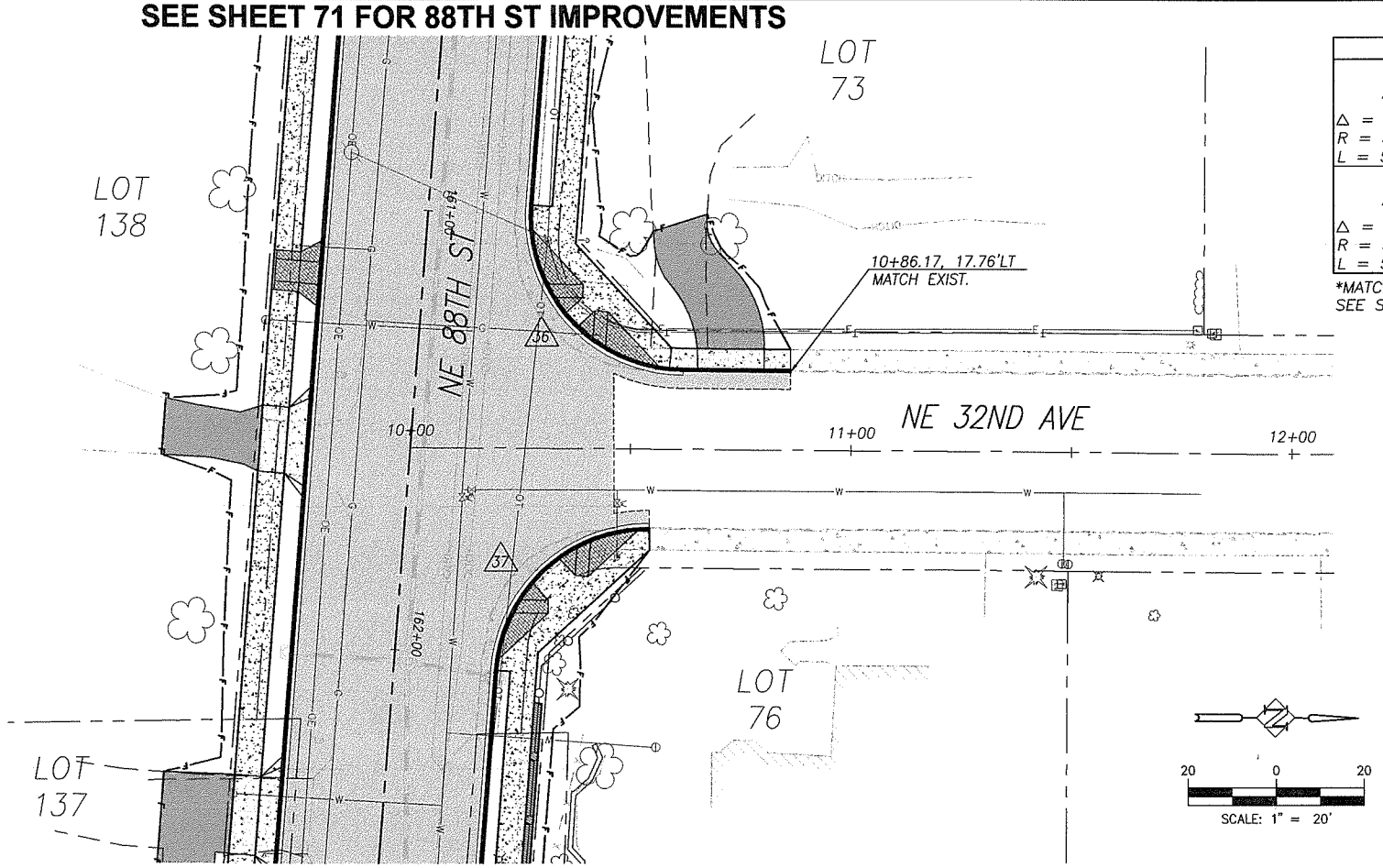

CURB RETURN TABLES		
36	DESCRIPTION	FL ELEV
	PC 160+97.01, 23.00' LT	276.98
	1/4 Δ	277.47
Δ = 94°00'54"	1/2 Δ	277.84
R = 35.00'	3/4 Δ	277.90
L = 57.43'	PT 10+61.85, 17.77' LT	277.64
37	DESCRIPTION	FL ELEV
	PC 10+54.50, 17.96' RT	277.91
	1/4 Δ	278.49
Δ = 85°56'33"	1/2 Δ	279.25
R = 35.00'	3/4 Δ	279.98
L = 52.50'	PT 162+03.00, 23.00' LT	280.47

*MATCH EXISTING FL ELEV
SEE SHEET 6 FOR CURB RAMP STAKING DATA

SEE SHEET 71 FOR 88TH ST IMPROVEMENTS

P:\Clc12 INE 88th\WORK\12-DW\GSI Clc12-ISECTEAST1.DWG

CONSTRUCTION NOTES:

NOTES:
SEE SITE PREPARATION AND DEMOLITION PLAN SHEETS FOR STRUCTURES AND FRANCHISE UTILITY COMMENTS.

CONTRACTOR SHALL POTHOLE TO VERIFY ALL CROSSINGS PRIOR TO CONSTRUCTION TO ENSURE CLEARANCE OF UTILITIES. COORDINATE WITH APPROPRIATE UTILITY AGENCY.

6. RELOCATE (REL) IN KIND, REMOVE (R), OR PROTECT (P) EXISTING FENCE. COORDINATE REMOVALS AND RELOCATIONS WITH PROPERTY OWNER.
7. RELOCATE EXISTING MAILBOX PER WSDOT/APWA STANDARD PLAN H-12 UNLESS NOTED TO BE (P) PROTECTED.
8. REMOVE (R), PROTECT (P), OR TRIM (T) EXISTING SHRUB OR TREE AS SHOWN ON THE PLANS OR AS DIRECTED.
13. EXISTING UTILITY POLE, LIGHT POLE, AND/OR GUY WIRE TO BE RELOCATED (R) BY OTHERS OR PROTECTED (P). COORDINATE WITH APPROPRIATE UTILITY.
17. SAWCUT AND REMOVE EXISTING PAVEMENT AT ALL CONNECTIONS AND TRANSITIONS A MINIMUM OF 4' FROM FACE OF NEW CURB, 1' FROM EDGE OF EXISTING PAVEMENT, OR AS DIRECTED BY FIELD INSPECTOR.
30. CONSTRUCT DRIVEWAY PER DETAIL AND "DRIVEWAY APPROACH SCHEDULE" TABLE ON SHEET 11.
31. CONSTRUCT CONCRETE CURB AND GUTTER PER DETAIL SHEET 12.
32. CONSTRUCT CONCRETE SIDEWALK PER DETAIL SHEET 14.
34. MATCH NEW CURB TO EXISTING CURB. CURB GRADES ARE BASED ON A 0.5' EXPOSURE. TRANSITION CURB EXPOSURE ON NEW CURB TO MATCH EXISTING CURB AT LEAST 3-FEET PRIOR TO MATCH POINT. IF NECESSARY, SAWCUT EXISTING CURB TO CREATE A CLEAN, UNDISTURBED EDGE.
35. MATCH NEW SIDEWALK TO EXISTING SIDEWALK. TRANSITION NEW SIDEWALK WIDTH/LOCATION TO MATCH EXISTING WIDTH/LOCATION AT 5:1 PRIOR TO MATCH LINE. IF NECESSARY, SAWCUT EXISTING SIDEWALK TO CREATE A CLEAN, UNDISTURBED EDGE.
36. CONSTRUCT 6'X6' A.C. LEVEL LANDING AND 6' TRANSITION RAMP FROM END OF SIDEWALK TO SHOULDER. 0.25' MIN CLASS 'A' A.C. OVER 0.4' CRUSHED ROCK.
37. CONSTRUCT A.C. PAVEMENT RECONSTRUCTION/WIDENING. REFER TO TYPICAL SECTIONS ON SHEETS 8.
38. CONSTRUCT A.C. OVERLAY. REFER TO TYPICAL SECTIONS ON SHEETS 8.
40. CONSTRUCT EXTRUDED CURB PER CLARK COUNTY STD. DRAWING F18A.
42. INSTALL FENCE AT LOCATIONS NOTED ON THE PLANS OR AS DIRECTED IN THE FIELD. SEE TYPICAL SECTION ON SHEET 12.
64. EXISTING STORM PIPE AND/OR STRUCTURE TO REMAIN.
66. ADJUST EXISTING MANHOLE CASTING WITH ADJUSTING RINGS/CATCH BASIN/VALVE BOX RIM TO FINISH GRADE.
69. CONSTRUCT TYPE 1 CURB INLET PER DETAIL ON SHEET 18. INSTALL STORM PIPE AS SHOWN AND PER "STORM DRAINAGE DATA" INFORMATION TABLE THIS SHEET.
73. CONSTRUCT ROADSIDE DITCH, GRADE TO DRAIN TO INLET.
80. RELOCATE (R), PROTECT (P) ADJUST (A) EXISTING SANITARY SEWER CLEANOUT, WATER VALVE OR WATER METER BOX AND/OR SERVICE AS REQUIRED AND DIRECTED. ALL DISTURBED SERVICE LINES SHALL BE REPAIRED AS REQUIRED.
81. EXISTING FIRE HYDRANT TO BE RELOCATED (R), PROTECTED (P), OR ADJUSTED (A). COORDINATE WITH CLARK PUBLIC UTILITIES.
82. PROTECT EXISTING WATER LINE.
90. RELOCATE (R), PROTECT (P), OR ADJUST (A) EXISTING IRRIGATION AS REQUIRED AND DIRECTED. ALL DISTURBED IRRIGATION SHALL BE REPAIRED AS REQUIRED.

FOR INFORMATIONAL PURPOSES ONLY
ALL PLAN DETAIL AND INFORMATION IS NOT SHOWN ON THIS 90% COMPLETED SET OF PLANS.
90% SUBMITTAL - JULY 2004

DESIGNED:	TSH
DRAWN:	NPR/RAF
CRP:	330222
HOR.	1" = 20'
VERT.	N/A
DATE:	7/2004
DWG:	
SHEET	90 OF 99

CALL 48 HOURS BEFORE YOU DIG 1-800-553-4344 "It's the Law" NORTHWEST UTILITIES NOTIFICATION CENTER

Harper Houf Peterson Righellis Inc.
ENGINEERS · PLANNERS · SURVEYORS
1104 MAIN STREET, SUITE 100, VANCOUVER, WA 98660
TEL 360.750.1131 www.hhpr.com FAX 360.750.1141

DESIGN & ENGINEERING DIVISION

NE 88TH STREET INTERSECTIONS
NE 29TH/30TH & 32ND AVENUES

proud past, promising future
CLARK COUNTY WASHINGTON

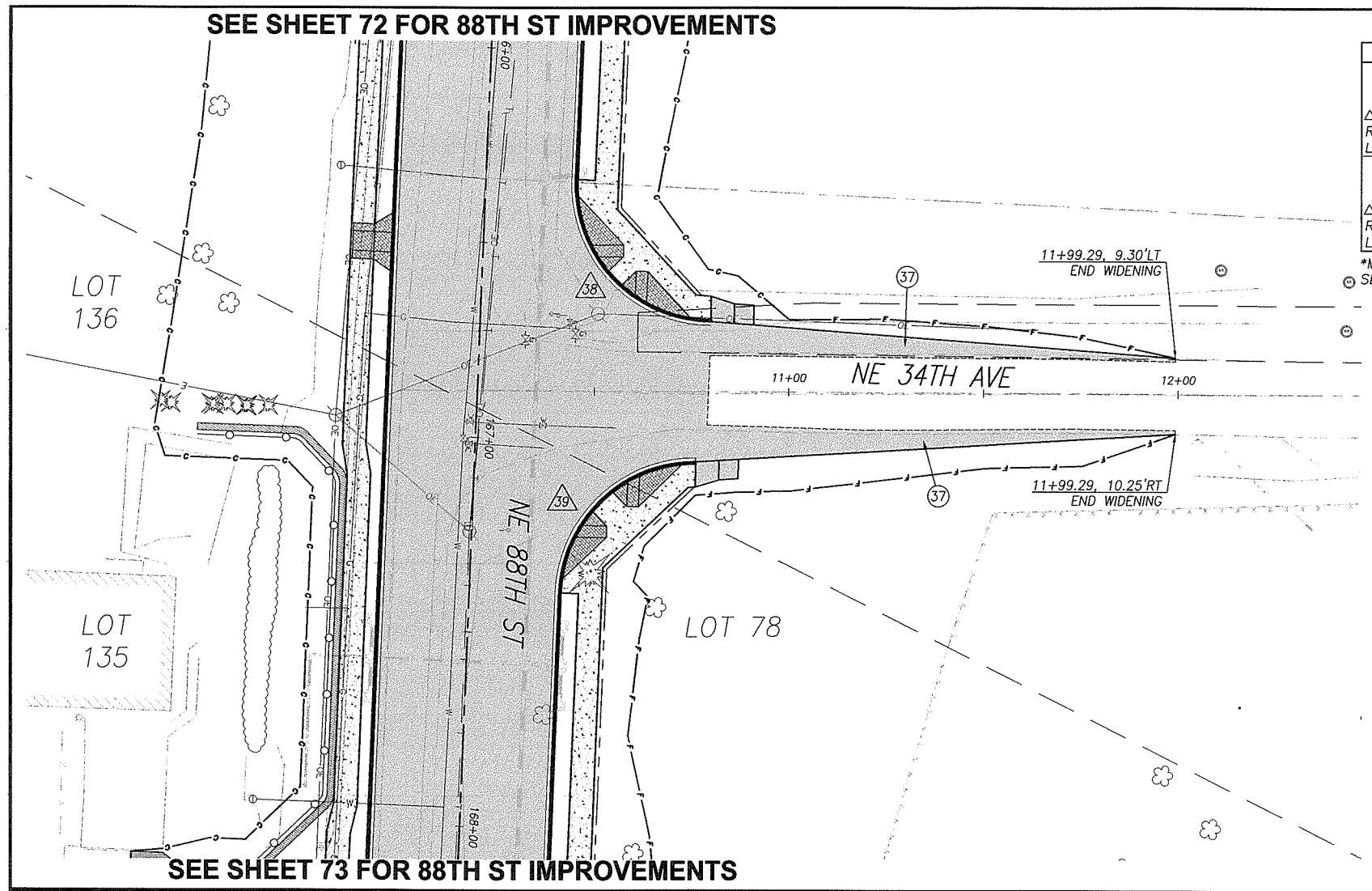

CURB RETURN TABLES		
38	DESCRIPTION	FL ELEV
	PC 166+32.93, 23.00' LT	275.32
	1/4 Δ	274.92
Δ = 92°03'58"	1/2 Δ	274.17
R = 35.00'	3/4 Δ	273.06
L = 56.24'	PT 10+79.96, 18.00' LT	271.59
39	DESCRIPTION	FL ELEV
	PC 10+76.14, 18.00' RT	272.02
	1/4 Δ	273.19
Δ = 87°56'02"	1/2 Δ	273.84
R = 35.00'	3/4 Δ	273.98
L = 53.72'	PT 167+39.00, 23.00' LT	273.93

*MATCH EXISTING FL ELEV

(37) SEE SHEET 6 FOR CURB RAMP STAKING DATA

20 0 20
SCALE: 1" = 20'

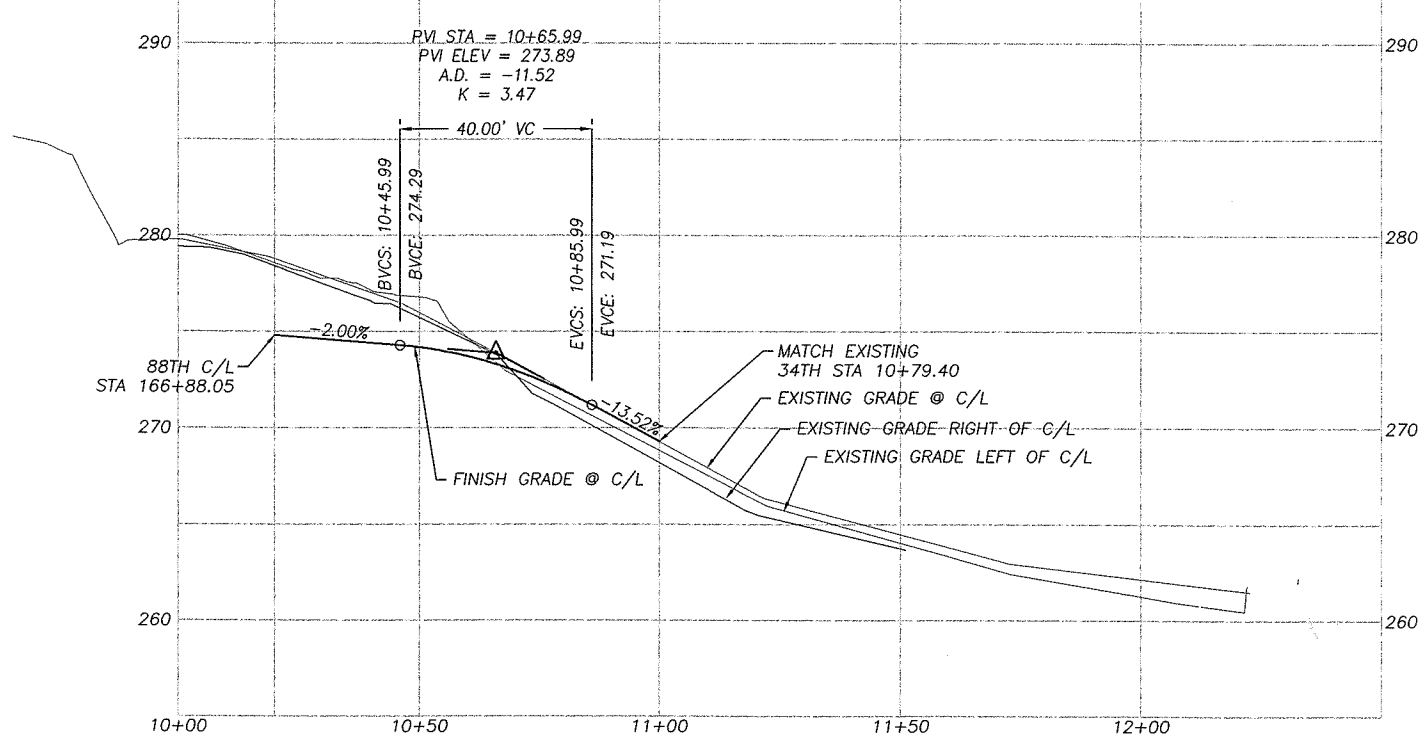

CONSTRUCTION NOTES:

NOTES:
SEE SITE PREPARATION AND DEMOLITION PLAN SHEETS FOR STRUCTURES AND FRANCHISE UTILITY COMMENTS.

CONTRACTOR SHALL POTHOLE TO VERIFY ALL CROSSINGS PRIOR TO CONSTRUCTION TO ENSURE CLEARANCE OF UTILITIES. COORDINATE WITH APPROPRIATE UTILITY AGENCY.

(6) RELOCATE (REL) IN KIND, REMOVE (R), OR PROTECT (P) EXISTING FENCE. COORDINATE REMOVALS AND RELOCATIONS WITH PROPERTY OWNER.

(7) RELOCATE EXISTING MAILBOX PER WSDOT/APWA STANDARD PLAN H-12 UNLESS NOTED TO BE (P) PROTECTED.

(8) REMOVE (R), PROTECT (P), OR TRIM (T) EXISTING SHRUB OR TREE AS SHOWN ON THE PLANS OR AS DIRECTED.

(13) EXISTING UTILITY POLE, LIGHT POLE, AND/OR GUY WIRE TO BE RELOCATED (R) BY OTHERS OR PROTECTED (P). COORDINATE WITH APPROPRIATE UTILITY.

(17) SAWCUT AND REMOVE EXISTING PAVEMENT AT ALL CONNECTIONS AND TRANSITIONS A MINIMUM OF 4' FROM FACE OF NEW CURB, 1' FROM EDGE OF EXISTING PAVEMENT, OR AS DIRECTED BY FIELD INSPECTOR.

(30) CONSTRUCT DRIVEWAY PER DETAIL AND "DRIVEWAY APPROACH SCHEDULE" TABLE ON SHEET 11.

(31) CONSTRUCT CONCRETE CURB AND GUTTER PER DETAIL SHEET 12.

(32) CONSTRUCT CONCRETE SIDEWALK PER DETAIL SHEET 14.

(34) MATCH NEW CURB TO EXISTING CURB. CURB GRADES ARE BASED ON A 0.5' EXPOSURE. TRANSITION CURB EXPOSURE ON NEW CURB TO MATCH EXISTING CURB AT LEAST 3-FEET PRIOR TO MATCH POINT. IF NECESSARY, SAWCUT EXISTING CURB TO CREATE A CLEAN, UNDISTURBED EDGE.

(35) MATCH NEW SIDEWALK TO EXISTING SIDEWALK. TRANSITION NEW SIDEWALK WIDTH/LOCATION TO MATCH EXISTING WIDTH/LOCATION AT 5:1 PRIOR TO MATCH LINE. IF NECESSARY, SAWCUT EXISTING SIDEWALK TO CREATE A CLEAN, UNDISTURBED EDGE.

(36) CONSTRUCT 6'X6' A.C. LEVEL LANDING AND 6' TRANSITION RAMP FROM END OF SIDEWALK TO SHOULDER. 0.25' MIN CLASS 'A' A.C. OVER 0.4' CRUSHED ROCK.

(37) CONSTRUCT A.C. PAVEMENT RECONSTRUCTION/WIDENING. REFER TO TYPICAL SECTIONS ON SHEETS 8.

(38) CONSTRUCT A.C. OVERLAY. REFER TO TYPICAL SECTIONS ON SHEETS 8.

(40) CONSTRUCT EXTRUDED CURB PER CLARK COUNTY STD. DRAWING F18A.

(42) INSTALL FENCE AT LOCATIONS NOTED ON THE PLANS OR AS DIRECTED IN THE FIELD. SEE TYPICAL SECTION ON SHEET 12.

(64) EXISTING STORM PIPE AND/OR STRUCTURE TO REMAIN.

(66) ADJUST EXISTING MANHOLE CASTING WITH ADJUSTING RINGS/CATCH BASIN/VALVE BOX RIM TO FINISH GRADE.

(69) CONSTRUCT TYPE 1 CURB INLET PER DETAIL ON SHEET 18. INSTALL STORM PIPE AS SHOWN AND PER "STORM DRAINAGE DATA" INFORMATION TABLE THIS SHEET.

(73) CONSTRUCT ROADSIDE DITCH, GRADE TO DRAIN TO INLET.

(80) RELOCATE (R), PROTECT (P) ADJUST (A) EXISTING SANITARY SEWER CLEANOUT, WATER VALVE OR WATER METER BOX AND/OR SERVICE AS REQUIRED AND DIRECTED. ALL DISTURBED SERVICE LINES SHALL BE REPAIRED AS REQUIRED.

(81) EXISTING FIRE HYDRANT TO BE RELOCATED (R), PROTECTED (P), OR ADJUSTED (A). COORDINATE WITH CLARK PUBLIC UTILITIES.

(82) PROTECT EXISTING WATER LINE.

(90) RELOCATE (R), PROTECT (P), OR ADJUST (A) EXISTING IRRIGATION AS REQUIRED AND DIRECTED. ALL DISTURBED IRRIGATION SHALL BE REPAIRED AS REQUIRED.

FOR INFORMATIONAL PURPOSES ONLY
ALL PLAN DETAIL AND INFORMATION IS NOT SHOWN ON THIS 90% COMPLETED SET OF PLANS.
90% SUBMITTAL - JULY 2004

DESIGNED: TSH
DRAWN: NPR/RAF
CRP: 330222
HOR. 1" = 20'
VERT. 1" = 5'
DATE: 7/2004
DWG:
SHEET 91 OF 99

CALL 48 HOURS BEFORE YOU DIG
1-800-553-4344
"It's the Law"
NORTHWEST UTILITIES NOTIFICATION CENTER

Harper Houf Peterson Righellis Inc.
ENGINEERS PLANNERS SURVEYORS
1104 MAIN STREET, SUITE 100, VANCOUVER, WA 98660
TEL 360.750.1131 www.hhpr.com FAX 360.750.1141

DESIGN & ENGINEERING DIVISION

NE 88TH STREET INTERSECTIONS
NE 34TH AVENUE

proud past, promising future
CLARK COUNTY WASHINGTON

P:\Crk-12 (NE 88th)\CRK12-DWGS\ Crk12-ISECTE-AST2.DWG

SEE SHEET 73 FOR 88TH ST IMPROVEMENTS

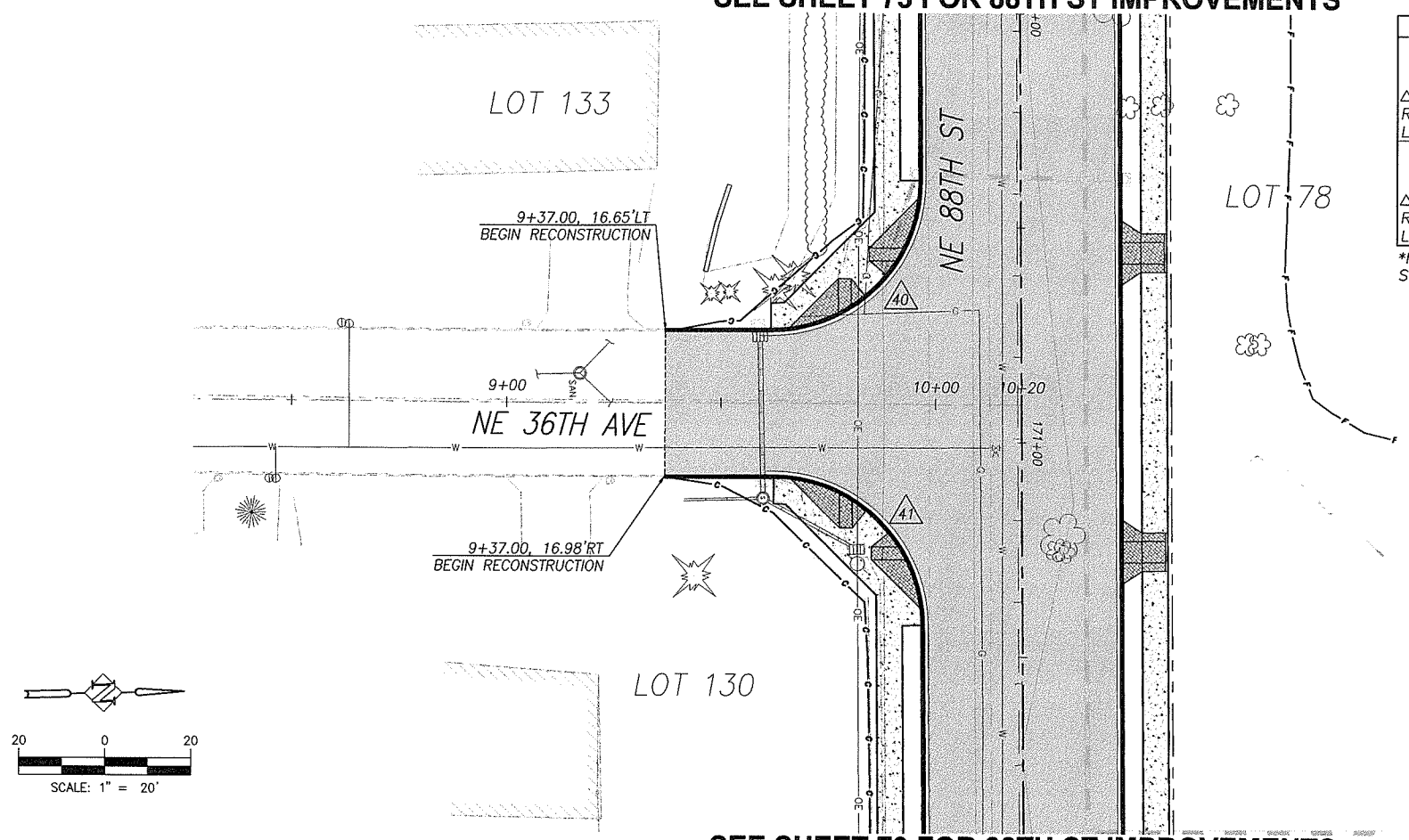

CURB RETURN TABLES		
40	DESCRIPTION	FL ELEV
	PC 170+38.80, 23.00' RT	273.47
	1/4 Δ	273.19
Δ = 90°22'39"	1/2 Δ	272.95
R = 35.00'	3/4 Δ	273.16
L = 55.21'	PT 9+61.59, 16.74' LT	273.91
41	DESCRIPTION	FL ELEV
	PC 9+62.40, 16.87' RT	273.85
	1/4 Δ	273.05
Δ = 89°37'54"	1/2 Δ	272.69
R = 35.00'	3/4 Δ	272.56
L = 54.75'	PT 171+42.42, 23.00' RT	272.43

*MATCH EXISTING FL ELEV
SEE SHEET 6 FOR CURB RAMP STAKING DATA

SEE SHEET 73 FOR 88TH ST IMPROVEMENTS
SEE SHEET 74 FOR 88TH ST IMPROVEMENTS

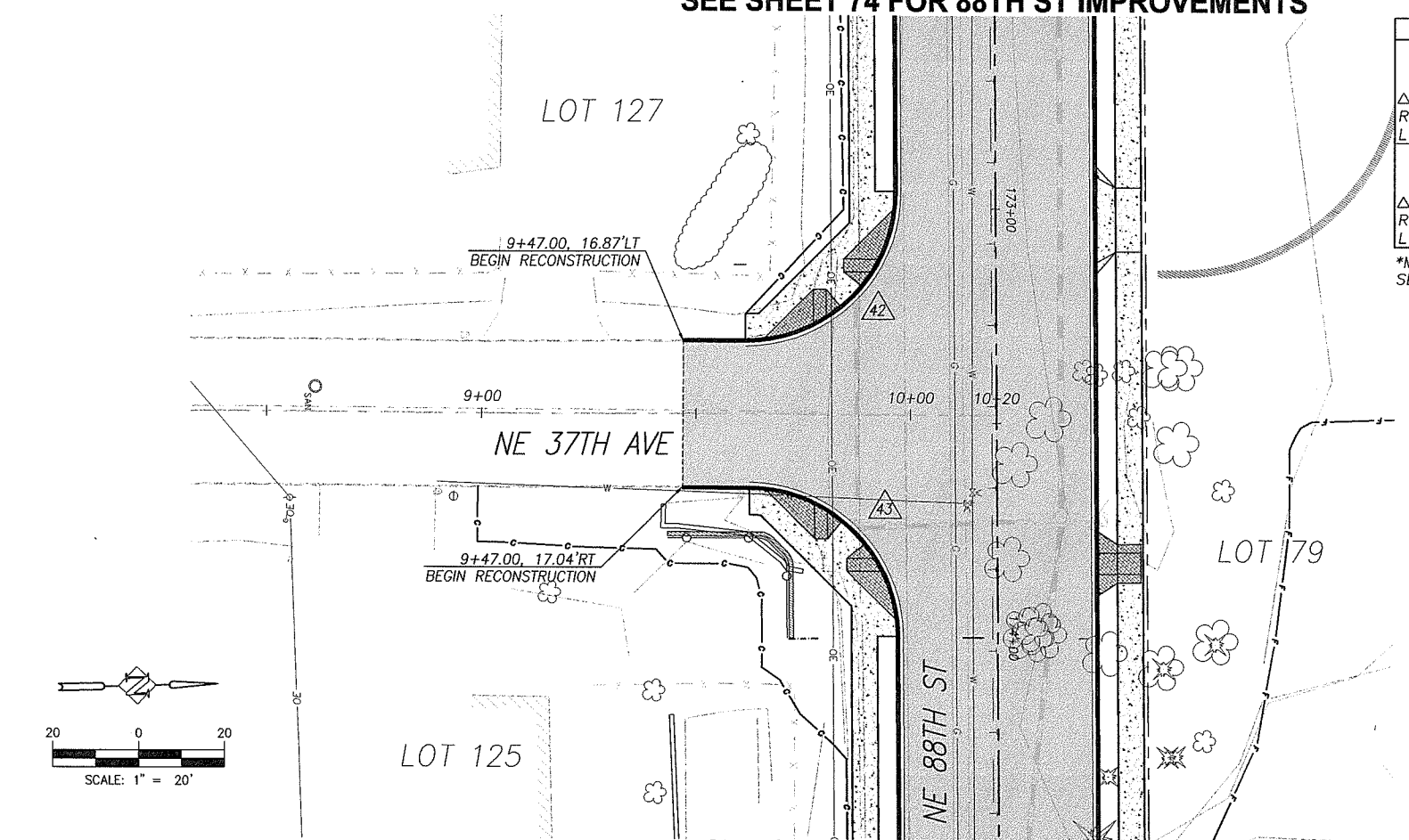

CURB RETURN TABLES		
42	DESCRIPTION	FL ELEV
	PC 172+95.69, 23.00' RT	270.90
	1/4 Δ	270.62
Δ = 90°37'56"	1/2 Δ	270.44
R = 35.00'	3/4 Δ	270.56
L = 55.36'	PT 9+61.44, 16.87' LT	271.00
43	DESCRIPTION	FL ELEV
	PC 9+62.53, 17.04' RT	270.99
	1/4 Δ	270.37
Δ = 89°29'39"	1/2 Δ	270.10
R = 35.00'	3/4 Δ	270.00
L = 54.63'	PT 173+99.59, 23.00' RT	269.86

*MATCH EXISTING FL ELEV
SEE SHEET 6 FOR CURB RAMP STAKING DATA

SEE SHEET 74 FOR 88TH ST IMPROVEMENTS

PAGE=12 INE 88thIIGRK12.DWGSLOt12.USECTEAST2.DWG

CONSTRUCTION NOTES:

NOTES:
SEE SITE PREPARATION AND DEMOLITION PLAN SHEETS FOR STRUCTURES AND FRANCHISE UTILITY COMMENTS.

CONTRACTOR SHALL POTHOLE TO VERIFY ALL CROSSINGS PRIOR TO CONSTRUCTION TO ENSURE CLEARANCE OF UTILITIES. COORDINATE WITH APPROPRIATE UTILITY AGENCY.

(6) RELOCATE (REL) IN KIND, REMOVE (R), OR PROTECT (P) EXISTING FENCE. COORDINATE REMOVALS AND RELOCATIONS WITH PROPERTY OWNER.

(7) RELOCATE EXISTING MAILBOX PER WSDOT/APWA STANDARD PLAN H-12 UNLESS NOTED TO BE (P) PROTECTED.

(8) REMOVE (R), PROTECT (P), OR TRIM (T) EXISTING SHRUB OR TREE AS SHOWN ON THE PLANS OR AS DIRECTED.

(13) EXISTING UTILITY POLE, LIGHT POLE, AND/OR GUY WIRE TO BE RELOCATED (R) BY OTHERS OR PROTECTED (P). COORDINATE WITH APPROPRIATE UTILITY.

(17) SAWCUT AND REMOVE EXISTING PAVEMENT AT ALL CONNECTIONS AND TRANSITIONS A MINIMUM OF 4' FROM FACE OF NEW CURB, 1' FROM EDGE OF EXISTING PAVEMENT, OR AS DIRECTED BY FIELD INSPECTOR.

(30) CONSTRUCT DRIVEWAY PER DETAIL AND "DRIVEWAY APPROACH SCHEDULE" TABLE ON SHEET 11.

(31) CONSTRUCT CONCRETE CURB AND GUTTER PER DETAIL SHEET 12.

(32) CONSTRUCT CONCRETE SIDEWALK PER DETAIL SHEET 14.

(34) MATCH NEW CURB TO EXISTING CURB. CURB GRADES ARE BASED ON A 0.5' EXPOSURE. TRANSITION CURB EXPOSURE ON NEW CURB TO MATCH EXISTING CURB AT LEAST 3-FEET PRIOR TO MATCH POINT. IF NECESSARY, SAWCUT EXISTING CURB TO CREATE A CLEAN, UNDISTURBED EDGE.

(35) MATCH NEW SIDEWALK TO EXISTING SIDEWALK. TRANSITION NEW SIDEWALK WIDTH/LOCATION TO MATCH EXISTING WIDTH/LOCATION AT 5:1 PRIOR TO MATCH LINE. IF NECESSARY, SAWCUT EXISTING SIDEWALK TO CREATE A CLEAN, UNDISTURBED EDGE.

(36) CONSTRUCT 6'X6' A.C. LEVEL LANDING AND 6' TRANSITION RAMP FROM END OF SIDEWALK TO SHOULDER. 0.25' MIN CLASS 'A' A.C. OVER 0.4' CRUSHED ROCK.

(37) CONSTRUCT A.C. PAVEMENT RECONSTRUCTION/WIDENING. REFER TO TYPICAL SECTIONS ON SHEETS 8.

(38) CONSTRUCT A.C. OVERLAY. REFER TO TYPICAL SECTIONS ON SHEETS 8.

(40) CONSTRUCT EXTRUDED CURB PER CLARK COUNTY STD. DRAWING F18A.

(42) INSTALL FENCE AT LOCATIONS NOTED ON THE PLANS OR AS DIRECTED IN THE FIELD. SEE TYPICAL SECTION ON SHEET 12.

(64) EXISTING STORM PIPE AND/OR STRUCTURE TO REMAIN.

(66) ADJUST EXISTING MANHOLE CASTING WITH ADJUSTING RINGS/CATCH BASIN/VALVE BOX RIM TO FINISH GRADE.

(69) CONSTRUCT TYPE 1 CURB INLET PER DETAIL ON SHEET 18. INSTALL STORM PIPE AS SHOWN AND PER "STORM DRAINAGE DATA" INFORMATION TABLE THIS SHEET.

(73) CONSTRUCT ROADSIDE DITCH, GRADE TO DRAIN TO INLET.

(80) RELOCATE (R), PROTECT (P) ADJUST (A) EXISTING SANITARY SEWER CLEANOUT, WATER VALVE OR WATER METER BOX AND/OR SERVICE AS REQUIRED AND DIRECTED. ALL DISTURBED SERVICE LINES SHALL BE REPAIRED AS REQUIRED.

(81) EXISTING FIRE HYDRANT TO BE RELOCATED (R), PROTECTED (P), OR ADJUSTED (A). COORDINATE WITH CLARK PUBLIC UTILITIES.

(82) PROTECT EXISTING WATER LINE.

(90) RELOCATE (R), PROTECT (P), OR ADJUST (A) EXISTING IRRIGATION AS REQUIRED AND DIRECTED. ALL DISTURBED IRRIGATION SHALL BE REPAIRED AS REQUIRED.

FOR INFORMATIONAL PURPOSES ONLY
ALL PLAN DETAIL AND INFORMATION IS NOT SHOWN ON THIS 90% COMPLETED SET OF PLANS.
90% SUBMITTAL - JULY 2004

DESIGNED:	TSH
DRAWN:	NPR/RAF
CRP:	330222
HOR.	1" = 20'
VERT.	N/A
DATE:	7/2004
DWG:	
SHEET	92 OF 99

CALL 48 HOURS BEFORE YOU DIG
1-800-553-4344
"It's the Law"
NORTHWEST UTILITIES NOTIFICATION CENTER

Harper Houf Peterson Righellis Inc.
ENGINEERS • PLANNERS • SURVEYORS
1104 MAIN STREET, SUITE 100, VANCOUVER, WA 98660
TEL 360.750.1131 www.hhpr.com FAX 360.750.1141

DESIGN & ENGINEERING DIVISION

NE 88TH STREET INTERSECTIONS
NE 36TH AVE & NE 37TH AVE

proud past, promising future
CLARK COUNTY WASHINGTON

SEE SHEET 75 FOR 88TH ST IMPROVEMENTS

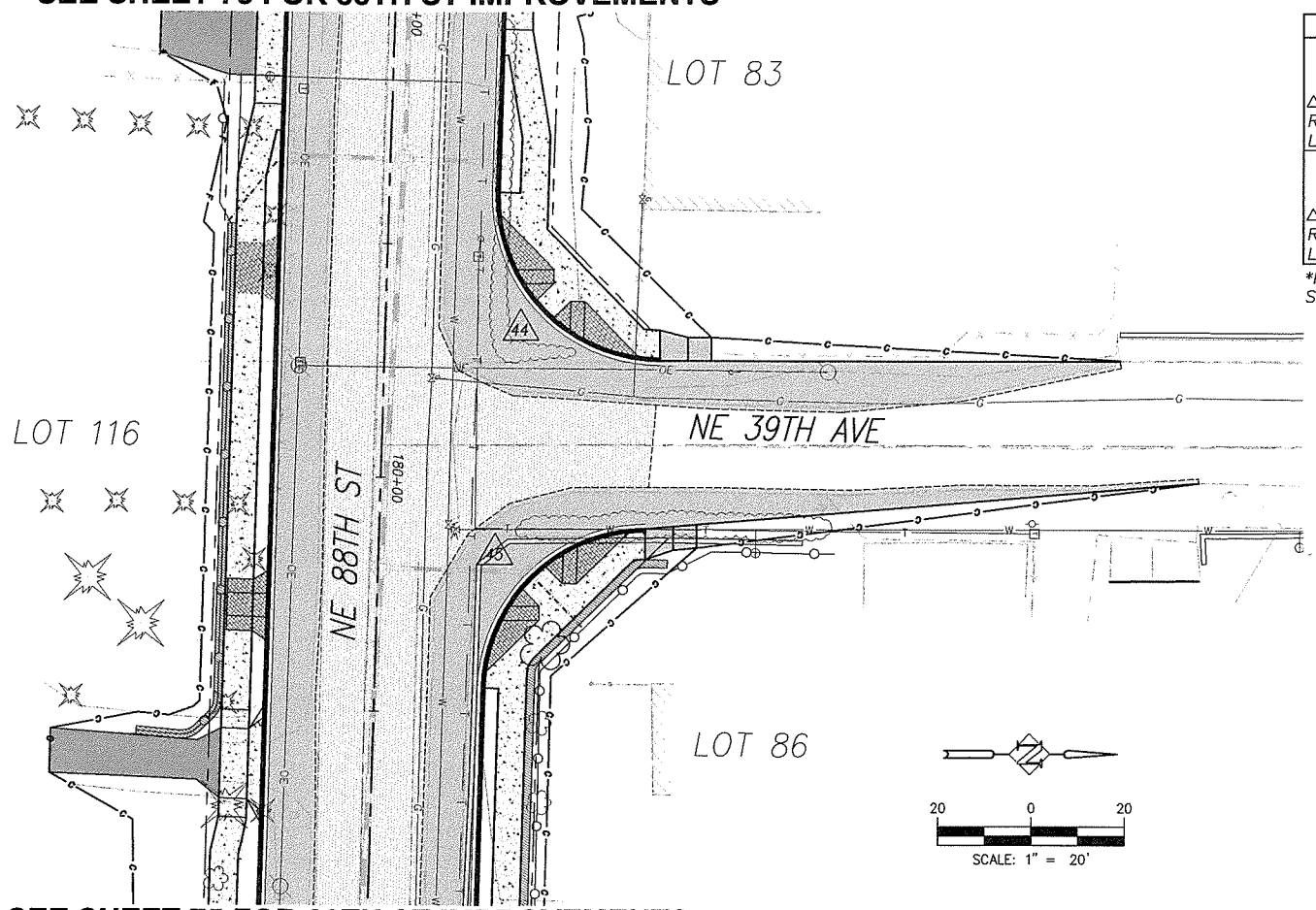

CURB RETURN TABLES		
44	DESCRIPTION	FL ELEV
	PC 179+38.33, 23.00' LT	273.09
	1/4 Δ	273.65
Δ = 91°41'18"	1/2 Δ	274.63
R = 35.00'	3/4 Δ	275.70
L = 56.01'	PT 10+59.59, 18.00' LT	276.56
45	DESCRIPTION	FL ELEV
	PC 10+56.46, 18.00' RT	276.45
	1/4 Δ	275.64
Δ = 88°18'42"	1/2 Δ	275.30
R = 35.00'	3/4 Δ	275.33
L = 53.95'	PT 180+44.37, 23.00' LT	275.39

*MATCH EXISTING FL ELEV
SEE SHEET 6 FOR CURB RAMP STAKING DATA

SEE SHEET 75 FOR 88TH ST IMPROVEMENTS

SEE SHEET 76 FOR 88TH ST IMPROVEMENTS

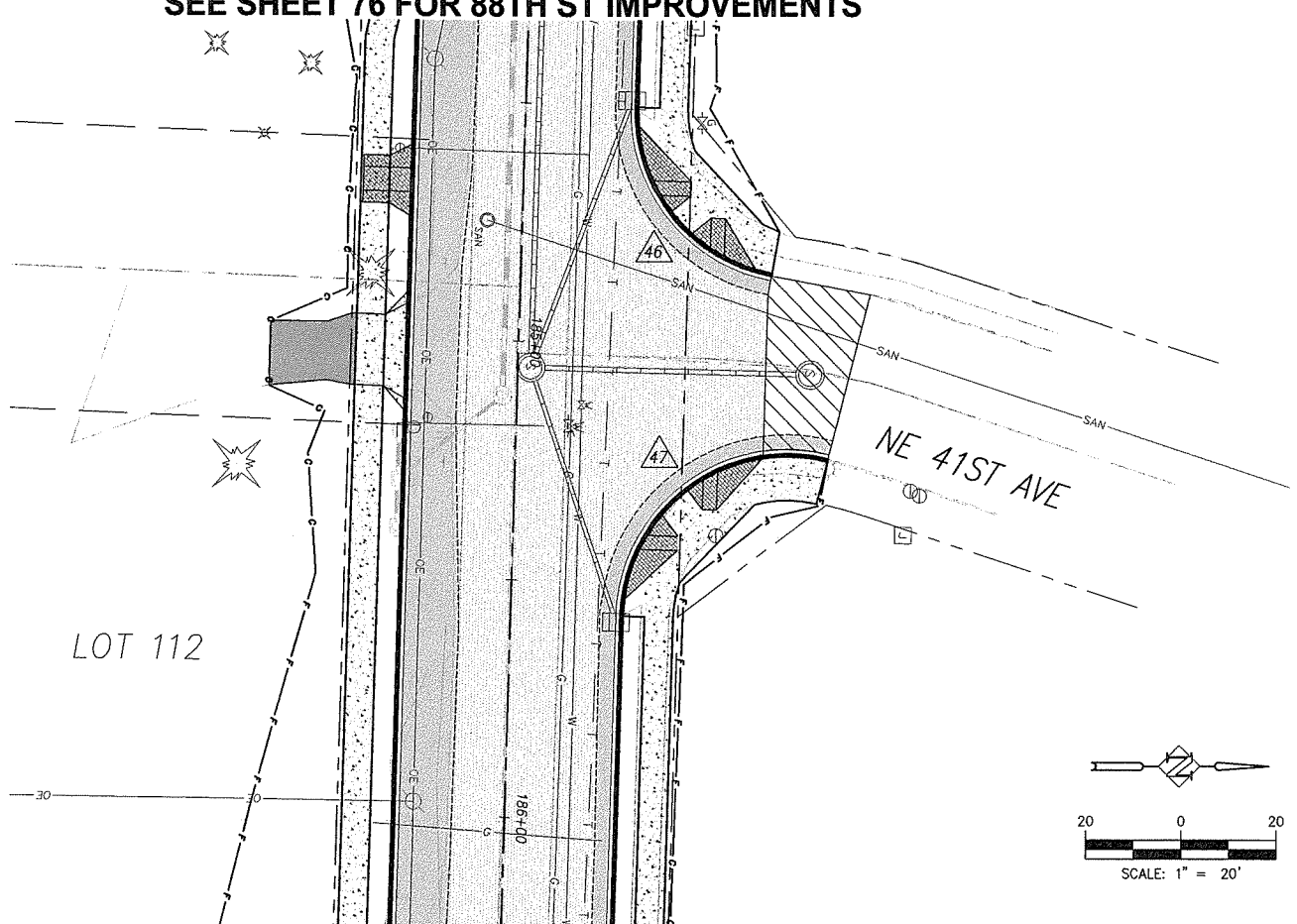

CURB RETURN TABLES		
46	DESCRIPTION	FL ELEV
	PC 184+50.20, 23.00' LT	269.60
	1/4 Δ	269.30
Δ = 81°07'25"	1/2 Δ	268.80
R = 35.00'	3/4 Δ	268.30
L = 49.56'	PT XX+XX.XX, 23.00' LT	268.01
47	DESCRIPTION	FL ELEV
	PC XX+XX.XX, 23.00' LT	267.90
	1/4 Δ	268.11
Δ = 102°37'16"	1/2 Δ	268.48
R = 35.00'	3/4 Δ	268.85
L = 62.69'	PT 185+56.96, 23.00' RT	269.03

*MATCH EXISTING FL ELEV
SEE SHEET 6 FOR CURB RAMP STAKING DATA

SEE SHEET 77 FOR 88TH ST IMPROVEMENTS

P:\Clk-12 (NE 88th)\CRK12-DWGS\Clk12-SECTEAST2.DWG

CONSTRUCTION NOTES:

(10) TELEPHONE RISERS AND/OR POLES TO BE REMOVED OR RELOCATED BY OTHERS, UNLESS OTHERWISE NOTED WITH (P) PROTECT. TELEPHONE CABLE TO BE ABANDONED. COORDINATE WORK WITH RON IMAI, US WEST, BY CALLING (360) 699-3546.

(19) LIMITS OF GRADING

(30) CONSTRUCT DRIVEWAY PER DETAIL AND "DRIVEWAY APPROACH SCHEDULE" TABLE ON SHEET 11.

(31) CONSTRUCT CONCRETE CURB AND GUTTER PER DETAIL SHEET 12.

(32) CONSTRUCT CONCRETE SIDEWALK PER DETAIL SHEET 14.

(33) CONSTRUCT CONCRETE CURB RAMP OF TYPE NOTED PER DETAIL SHEET 14.

(34) MATCH NEW CURB TO EXISTING CURB. CURB GRADES ARE BASED ON A 0.5' EXPOSURE. TRANSITION CURB EXPOSURE ON NEW CURB TO MATCH EXISTING CURB AT LEAST 3-FEET PRIOR TO MATCH POINT. IF NECESSARY, SAWCUT EXISTING CURB TO CREATE A CLEAN, UNDISTURBED EDGE.

(35) MATCH NEW SIDEWALK TO EXISTING SIDEWALK. TRANSITION NEW SIDEWALK WIDTH/LOCATION TO MATCH EXISTING WIDTH/LOCATION AT 5:1 PRIOR TO MATCH LINE. IF NECESSARY, SAWCUT EXISTING SIDEWALK TO CREATE A CLEAN, UNDISTURBED EDGE.

(36) CONSTRUCT 6'X6' A.C. LEVEL LANDING AND 6' TRANSITION RAMP FROM END OF SIDEWALK TO SHOULDER. 0.25' MIN CLASS 'A' A.C. OVER 0.4' CRUSHED ROCK.

(37) CONSTRUCT A.C. PAVEMENT RECONSTRUCTION/WIDENING. REFER TO TYPICAL SECTIONS ON SHEETS 8.

(38) CONSTRUCT A.C. OVERLAY. REFER TO TYPICAL SECTIONS ON SHEETS 8.

(39) RELOCATE (R), PROTECT (P), OR ADJUST (A) EXISTING TRAFFIC SIGNAL POLE, PER TRAFFIC SIGNAL PLANS, SHEETS 94 TO 99.

(40) CONSTRUCT EXTRUDED CURB PER CLARK COUNTY STD. DRAWING F18A.

(42) INSTALL FENCE AT LOCATIONS NOTED ON THE PLANS OR AS DIRECTED IN THE FIELD. SEE TYPICAL SECTION ON SHEET 12.

(43) INSTALL FENCE ON RETAINING WALL. SEE RETAINING WALL TABLES FOR DETAILS.

(44) CONSTRUCT RETAINING WALL PER PLAN AND PROFILE ON SHEET 42 TO 56. SEE TYPICAL DETAILS ON SHEETS 40 AND 41.

(54) CONSTRUCT STD. STORM MANHOLE, TYPE 1 WITH STANDARD MANHOLE RING AND COVER PER DETAIL SHEET 17.

(55) CONSTRUCT STD. OVERSIZED STORM MANHOLE, TYPE 2 WITH STANDARD MANHOLE RING AND COVER PER DETAIL SHEET 17.

(56) CONSTRUCT STD. FLAT TOP STORM MANHOLE, TYPE 3 WITH STANDARD MANHOLE RING AND COVER PER DETAIL SHEET 17

(57) CONSTRUCT PRIVATE CATCH BASIN PER DETAIL ON SHEET 19. INSTALL STORM PIPE AS SHOWN AND PER "STORM DRAINAGE DATA" INFORMATION TABLE THIS SHEET.

(58) CONSTRUCT TYPE 1 COMBINATION CURB INLET PER DETAIL ON SHEET 18. INSTALL STORM PIPE AS SHOWN AND PER "STORM DRAINAGE DATA" INFORMATION TABLE THIS SHEET.

(59) CONSTRUCT CATCH BASIN PER DETAIL ON SHEET 18.

(60) CONSTRUCT DITCH INLET PER DETAIL ON SHEET 19. INSTALL STORM PIPE AS SHOWN AND PER "STORM DRAINAGE DATA" INFORMATION TABLE THIS SHEET.

(61) INSTALL STORM PIPE.

(62) INSTALL TRENCH DRAIN AND STORM PIPE. SEE DETAILS ON SHEET 19.

(63) REMOVE EXISTING STORM SEWER PIPE AND/OR STRUCTURES. BACKFILL AND COMPACT VOID LEFT FROM EXISTING PIPE AS NECESSARY.

(64) EXISTING STORM PIPE AND/OR STRUCTURE TO REMAIN.

(65) PLUG AND ABANDON EXISTING STORM PIPE.

(66) ADJUST EXISTING MANHOLE CASTING WITH ADJUSTING RINGS/CATCH BASIN/VALVE BOX RIM TO FINISH GRADE.

(67) CONNECT TO EXISTING STORM PIPE OR STRUCTURE PER DETAIL ON SHEET 19.

(68) INSTALL STORM FILTER VAULT. SEE DETAIL SHEET 38.

(69) CONSTRUCT TYPE 1 CURB INLET PER DETAIL ON SHEET 18. INSTALL STORM PIPE AS SHOWN AND PER "STORM DRAINAGE DATA" INFORMATION TABLE THIS SHEET.

(73) CONSTRUCT ROADSIDE DITCH, GRADE TO DRAIN TO INLET.

(80) RELOCATE (R), PROTECT (P) ADJUST (A) EXISTING SANITARY SEWER CLEANOUT, WATER VALVE OR WATER METER BOX AND/OR SERVICE AS REQUIRED AND DIRECTED. ALL DISTURBED SERVICE LINES SHALL BE REPAIRED AS REQUIRED.

(81) EXISTING FIRE HYDRANT TO BE RELOCATED (R), PROTECTED (P), OR ADJUSTED (A). COORDINATE WITH CLARK PUBLIC UTILITIES.

(82) PROTECT EXISTING WATER LINE.

(90) RELOCATE (R), PROTECT (P), OR ADJUST (A) EXISTING IRRIGATION AS REQUIRED AND DIRECTED. ALL DISTURBED IRRIGATION SHALL BE REPAIRED AS REQUIRED.

(91) ADJUST EXISTING SANITARY OR STORM MANHOLE TO FINISH GRADE BY REMOVING CONE SECTION AND ADDITNG FULL MANHOLE SECTION.

(92) EXTEND EXISTING SEWER LATERAL TO PROPOSED R/W LINE AND INSTALL CLEANOUT.

FOR INFORMATIONAL PURPOSES ONLY

ALL PLAN DETAIL AND INFORMATION IS NOT SHOWN ON THIS 90% COMPLETED SET OF PLANS.

90% SUBMITTAL - JULY 2004

DESIGNED:	TSH
DRAWN:	NPR/RAF
CRP:	330222
HOR.	1" = 20'
VERT.	N/A
DATE:	7/2004
DWG:	
SHEET	93 OF 99

CALL 48 HOURS BEFORE YOU DIG 1-800-553-4344 "It's the Law" NORTHWEST UTILITIES NOTIFICATION CENTER

Harper Houf Peterson Righellis Inc.
ENGINEERS PLANNERS SURVEYORS
1104 MAIN STREET SUITE 100, VANCOUVER, WA 98660
TEL 360.750.1131 www.hhpr.com FAX 360.750.1141

DESIGN & ENGINEERING DIVISION

NE 88TH STREET INTERSECTIONS
NE 39TH AVE & NE 41ST AVE

proud past, promising future

CLARK COUNTY WASHINGTON

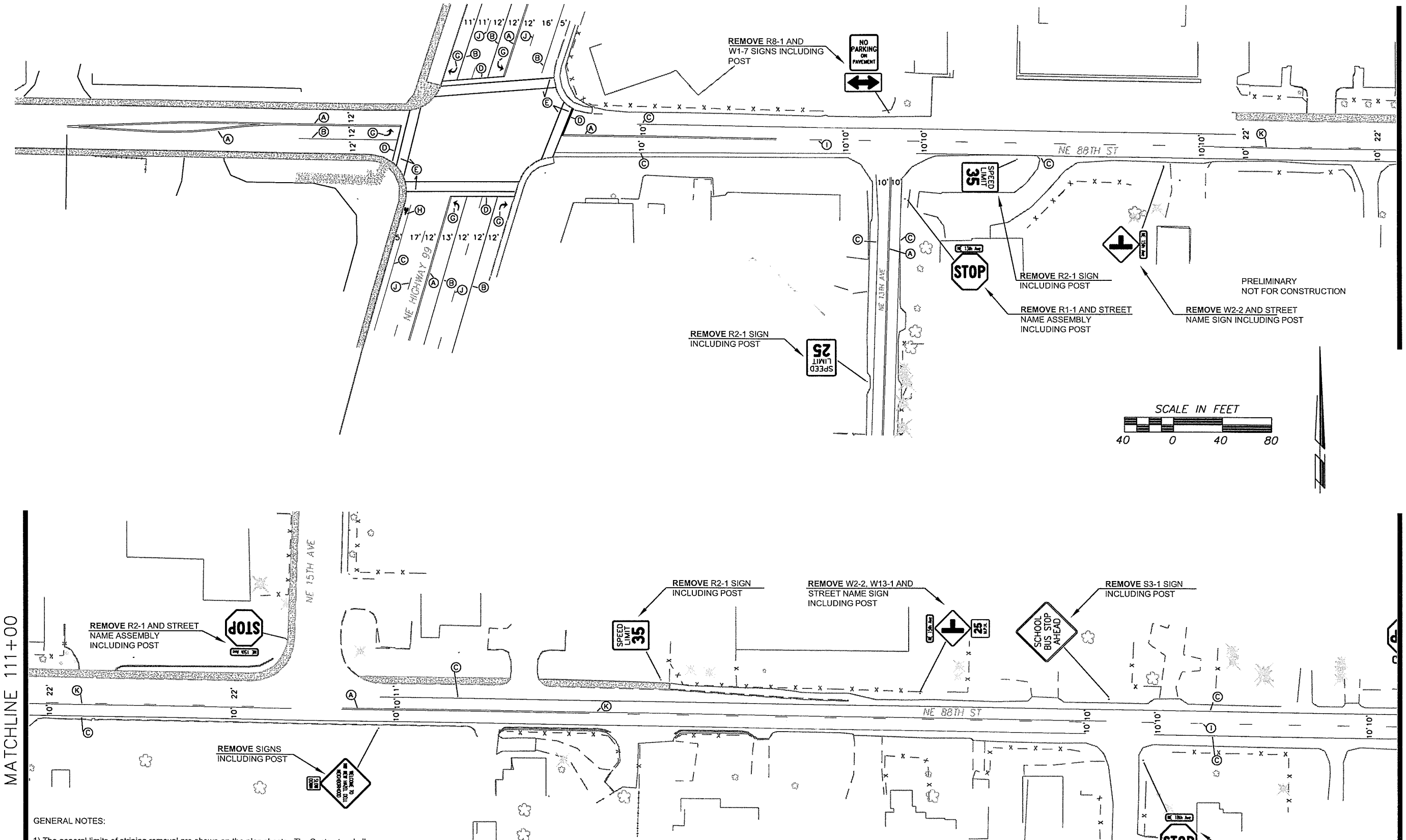

GENERAL NOTES:

1) The general limits of striping removal are shown on the plan sheets. The Contractor shall remove permanent striping where the pavement is not being overlaid, and the final pavement markings conflict with the existing striping.
2) The striping and pavement marking removal process shall conform to section 8-22.3(6) of the Specifications. The County's accepted practice of removal of existing painted pavement marking is by shot blasting. All other markings are removed by grinding. The Contractor shall have a written approval by the engineer for any other method of removal.
3) The Contractor shall maintain existing permanent signing in accordance with section 1-07.23(1) of the Specifications.
4) The Contractor shall surplus all signs to Clark County Public Works at no cost to the Contract. The sign posts and other appurtenances are not to be salvaged to the County.
5) The Contractor shall provide temporary pavement markings in accordance with section 8.23 of the Specifications.
6) Clark County Public Works will remove all Type III barricades. The barricades are the property of Clark County. The Contractor will receive no salvage value for these barricades.

EXISTING STRIPING

- (A) DOUBLE YELLOW CENTER LINE
- (B) WIDE LINE
- (C) EDGE LINE
- (D) PLASTIC STOP LINE
- (E) PLASTIC CROSSWALK LINE
- (F) TWO-WAY LEFT TURN LINE
- (G) PLASTIC TRAFFIC ARROW
- (H) PLASTIC BICYCLE SYMBOL
- (I) SKIP CENTER LINE
- (J) LANE LINE
- (K) YELLOW NO PASSING (ONE DIRECTION)

ALL NEW STRIPING AND SIGNING WILL BE INSTALLED BY CLARK COUNTY PUBLIC WORKS.

THE CONTRACTOR SHALL REMOVE ALL CONFLICTING SIGNS, STRIPING AND PAVEMENT MARKINGS.

DESIGNED	RK
DRAWN	KB
CRP	321022
HOR.	1"=40'
VERT.	NA
DATE	6/8/04
DWG:	SS1-4
SHEET	SS-1 OF

CALL 48 HOURS BEFORE YOU DIG 1-800-553-4344 "It's the Law" NORTHWEST UTILITIES NOTIFICATION CENTER

PRELIMINARY NOT FOR CONSTRUCTION

DESIGN & ENGINEERING DIVISION
DESIGN SECTION

NE 88TH ST
SIGNING & STRIPING REMOVAL PLAN

proud past, promising future
CLARK COUNTY WASHINGTON

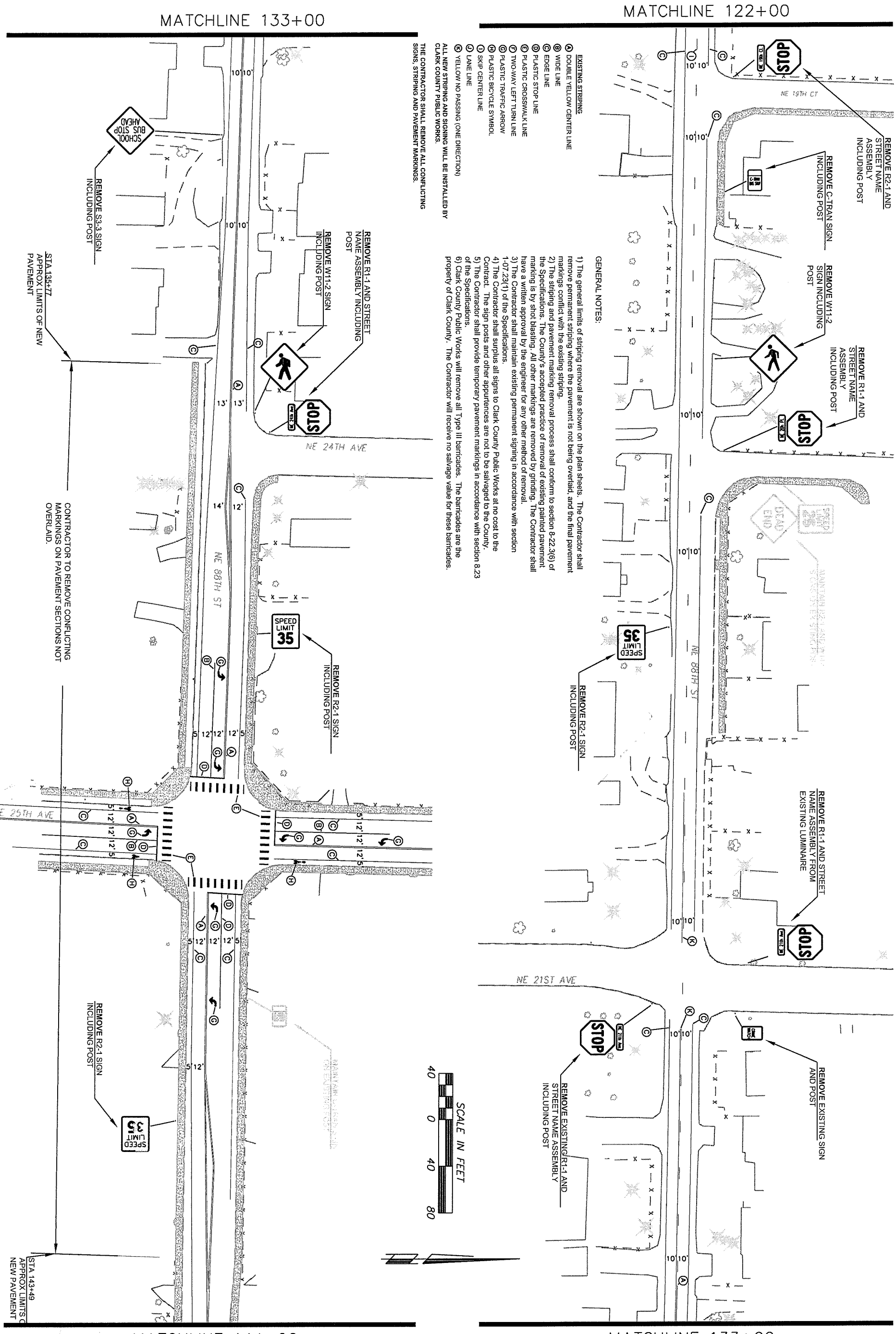

CLARK COUNTY
WASHINGTON
proud past, promising future

DESIGN & ENGINEERING DIVISION
DESIGN SECTION

NE 88TH STREET
SIGNING & STRIPING REMOVAL PLAN

ROBERT DALE KLUG
STATE OF WASHINGTON
REGISTERED PROFESSIONAL ENGINEER
EXPIRES: JULY 29, 2006

CALL 48 HOURS BEFORE YOU DIG
1-800-553-4344
"It's the Law"
NORTHWEST UTILITIES NOTIFICATION CENTER

DESIGNED	RK
DRAWN	KB
CRP	321022
HOR.	1"=40'
VERT.	NA
DATE	6/8/04
DWG:	SS1-4
SHEET	SS-2 OF

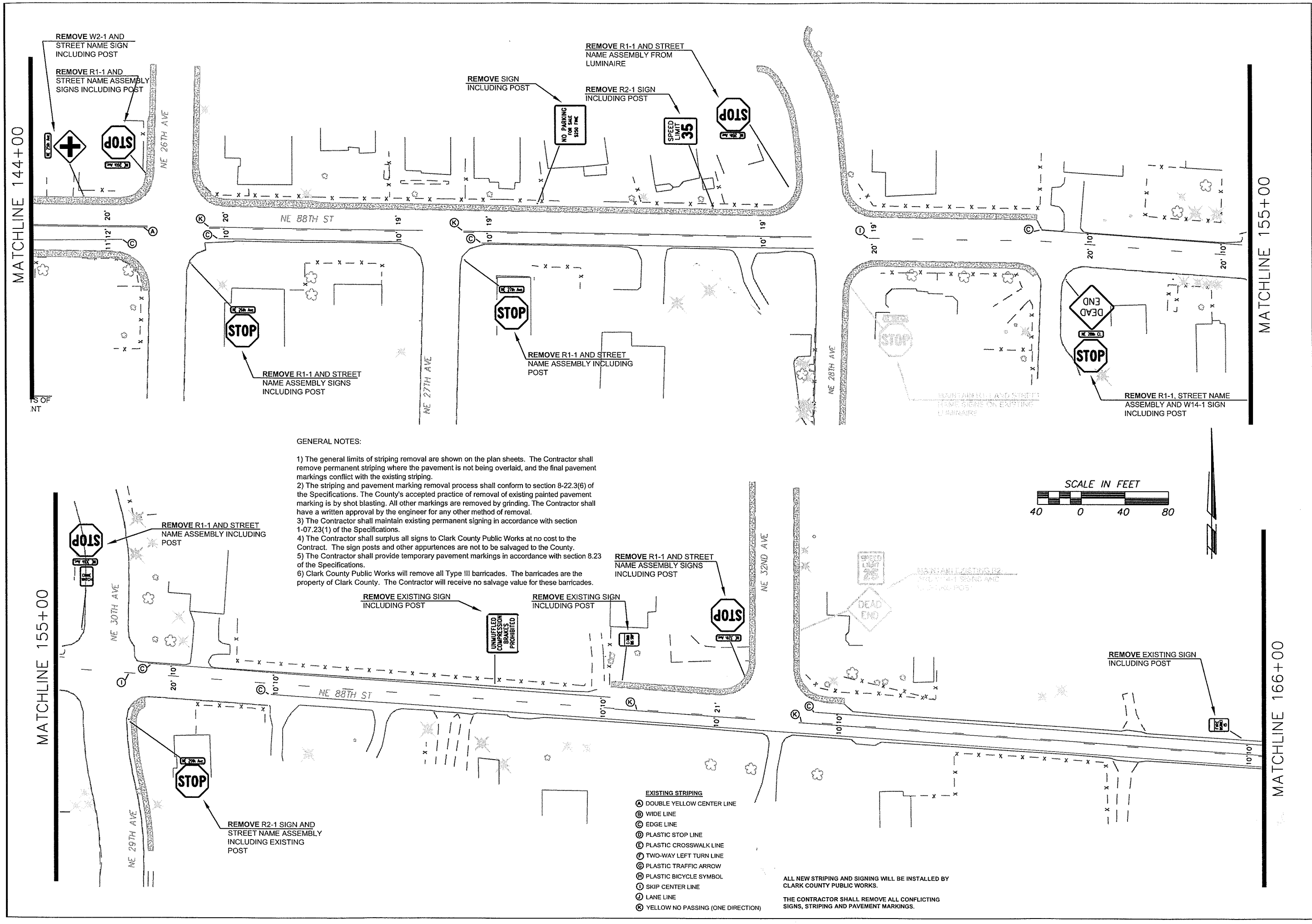

GENERAL NOTES:

1) The general limits of striping removal are shown on the plan sheets. The Contractor shall remove permanent striping where the pavement is not being overlaid, and the final pavement markings conflict with the existing striping.
2) The striping and pavement marking removal process shall conform to section 8-22.3(6) of the Specifications. The County's accepted practice of removal of existing painted pavement marking is by shot blasting. All other markings are removed by grinding. The Contractor shall have a written approval by the engineer for any other method of removal.
3) The Contractor shall maintain existing permanent signing in accordance with section 1-07.23(1) of the Specifications.
4) The Contractor shall surplus all signs to Clark County Public Works at no cost to the Contract. The sign posts and other appurtences are not to be salvaged to the County.
5) The Contractor shall provide temporary pavement markings in accordance with section 8.23 of the Specifications.
6) Clark County Public Works will remove all Type III barricades. The barricades are the property of Clark County. The Contractor will receive no salvage value for these barricades.

ALL NEW STRIPING AND SIGNING WILL BE INSTALLED BY CLARK COUNTY PUBLIC WORKS.

THE CONTRACTOR SHALL REMOVE ALL CONFLICTING SIGNS, STRIPING AND PAVEMENT MARKINGS.

DESIGN & ENGINEERING DIVISION
DESIGN SECTION

NE 88TH STREET
SIGNING & STRIPING REMOVAL PLAN

DESIGNED	RK
DRAWN	KB
CRP	321022
HOR.	1"=40'
VERT.	NA
DATE	6/8/04
DWG:	SS1-4
SHEET	SS-3 OF

CALL 48 HOURS BEFORE YOU DIG
1-800-553-4344
"It's the Law"
NORTHWEST UTILITIES NOTIFICATION CENTER

ROBERT DALE KLUG
STATE OF WASHINGTON
PROFESSIONAL ENGINEER
EXPIRES JULY 29, 2006
PRELIMINARY NOT FOR CONSTRUCTION

proud past, promising future
CLARK COUNTY
WASHINGTON

ALL NEW STRIPING AND SIGNING WILL BE INSTALLED BY CLARK COUNTY PUBLIC WORKS.

THE CONTRACTOR SHALL REMOVE ALL CONFLICTING SIGNS, STRIPING AND PAVEMENT MARKINGS.

EXISTING STRIPING

- (A) DOUBLE YELLOW CENTER LINE
- (B) WIDE LINE
- (C) EDGE LINE
- (D) PLASTIC STOP LINE
- (E) PLASTIC CROSSWALK LINE
- (F) TWO-WAY LEFT TURN LINE
- (G) PLASTIC TRAFFIC ARROW
- (H) PLASTIC BICYCLE SYMBOL
- (I) SKIP CENTER LINE
- (J) LANE LINE
- (K) YELLOW NO PASSING (ONE DIRECTION)

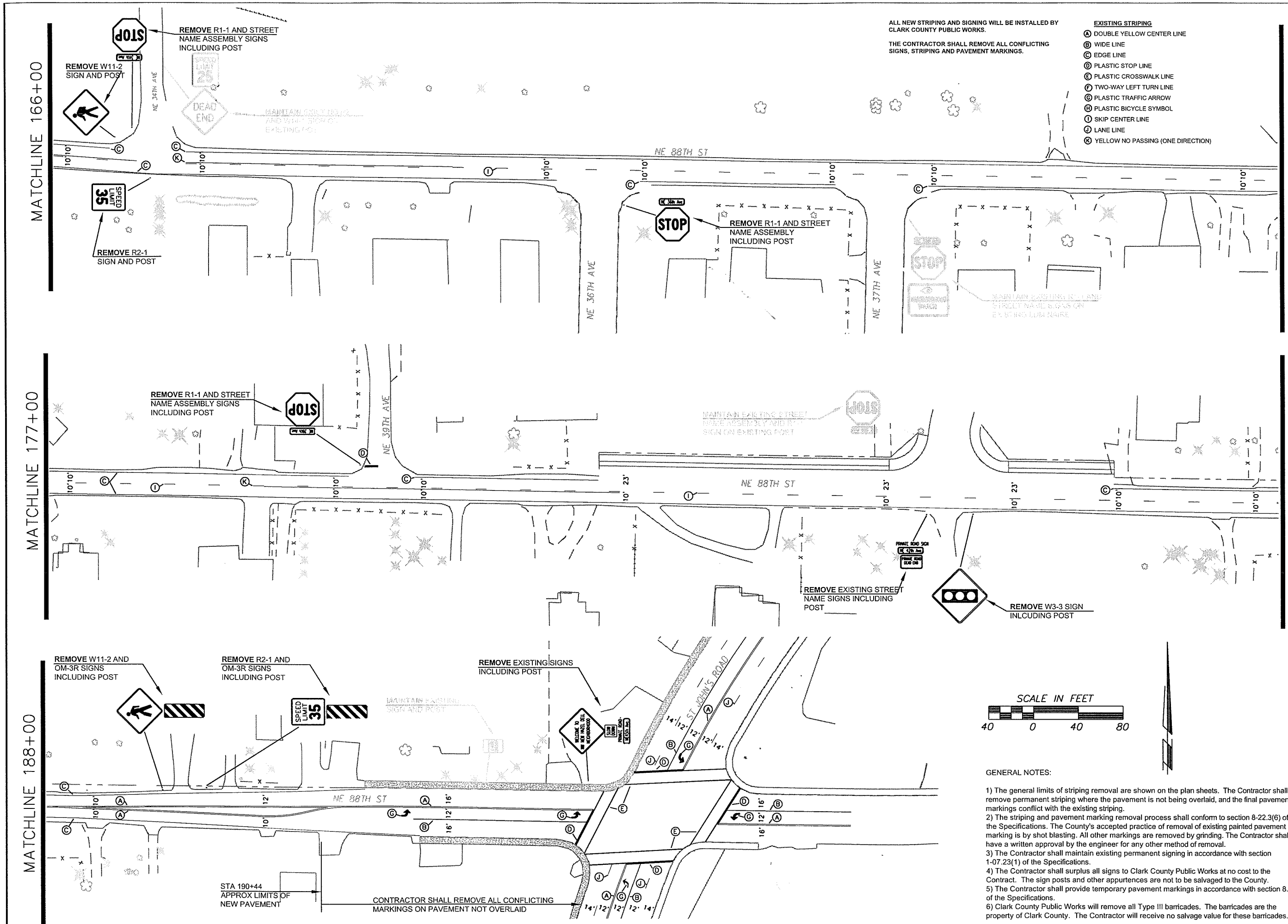

GENERAL NOTES:

1) The general limits of striping removal are shown on the plan sheets. The Contractor shall remove permanent striping where the pavement is not being overlaid, and the final pavement markings conflict with the existing striping.
2) The striping and pavement marking removal process shall conform to section 8-22.3(6) of the Specifications. The County's accepted practice of removal of existing painted pavement marking is by shot blasting. All other markings are removed by grinding. The Contractor shall have a written approval by the engineer for any other method of removal.
3) The Contractor shall maintain existing permanent signing in accordance with section 1-07.23(1) of the Specifications.
4) The Contractor shall surplus all signs to Clark County Public Works at no cost to the Contract. The sign posts and other appurtences are not to be salvaged to the County.
5) The Contractor shall provide temporary pavement markings in accordance with section 8.23 of the Specifications.
6) Clark County Public Works will remove all Type III barricades. The barricades are the property of Clark County. The Contractor will receive no salvage value for these barricades.

DESIGNED	RK
DRAWN	KB
CRP	321022
HOR.	1"=40'
VERT.	NA
DATE	6/8/04
DWG:	SS1-4
SHEET SS-4 OF	

CALL 48 HOURS BEFORE YOU DIG 1-800-553-4344 "It's the Law" NORTHWEST UTILITIES NOTIFICATION CENTER

PRELIMINARY NOT FOR CONSTRUCTION

DALE R. KLUG STATE OF WASHINGTON 19900 PROFESSIONAL ENGINEER EXPIRES JULY 29, 2006

DESIGN & ENGINEERING DIVISION
DESIGN SECTION

NE 88TH STREET SIGNING & STRIPING REMOVAL PLAN

CLARK COUNTY WASHINGTON
proud past, promising future

NEW

STRIPING NOTES

- (A) ① DOUBLE YELLOW CENTER LINE
- (B) ② WIDE LINE
- (C) ③ EDGE LINE
- (D) ④ PLASTIC STOP LINE
- (E) ⑤ PLASTIC CROSSWALK LINE
- (F) ⑥ TWO-WAY LEFT TURN LINE
- (G) ⑦ PLASTIC TRAFFIC ARROW
- (H) ⑧ PLASTIC BICYCLE SYMBOL
- (I) ⑨ SKIP CENTER LINE
- (J) ⑩ LANE LINE
- (K) ⑪ YELLOW NO PASSING (ONE DIRECTION)

ALL NEW STRIPING AND SIGNING WILL BE INSTALLED BY CLARK COUNTY PUBLIC WORKS.

THE CONTRACTOR SHALL REMOVE ALL CONFLICTING SIGNS, STRIPING AND PAVEMENT MARKINGS.

NEW STRIPING INCLUDES STRIPING WITHIN THE SEGMENTS OF ROADWAY TO BE REPAVED AND THE SEGMENTS OF ROADWAY OUTSIDE OF PAVING LIMITS WHICH ARE TO BE MODIFIED.

EXISTING STRIPING INCLUDES STRIPING WHICH IS NOT MODIFIED ON THIS PROJECT, BUT MAY NEED TO BE REPRESHED DUE TO CONTRACT WORK DUE TO FACTORS SUCH AS ASPHALT TACK COAT BEING TRACKED FROM THE JOBSITE ONTO OTHER ROADS.

GENERAL NOTES:

1) The general limits of striping removal are shown on the plan sheets. The Contractor shall remove permanent striping where the pavement is not being overlaid, and the final pavement markings conflict with the existing striping.
2) The striping and pavement marking removal process shall conform to section 8-22.3(6) of the Specifications. The County's accepted practice of removal of existing painted pavement marking is by shot blasting. All other markings are removed by grinding. The Contractor shall have a written approval by the engineer for any other method of removal.
3) The Contractor shall maintain existing permanent signing in accordance with section 1-07.23(1) of the Specifications.
4) The Contractor shall surplus all signs to Clark County Public Works at no cost to the Contract. The sign posts and other appurtences are not to be salvaged to the County.
5) The Contractor shall provide temporary pavement markings in accordance with section 8.23 of the Specifications.
6) Clark County Public Works will remove all Type III barricades. The barricades are the property of Clark County. The Contractor will receive no salvage value for these barricades.

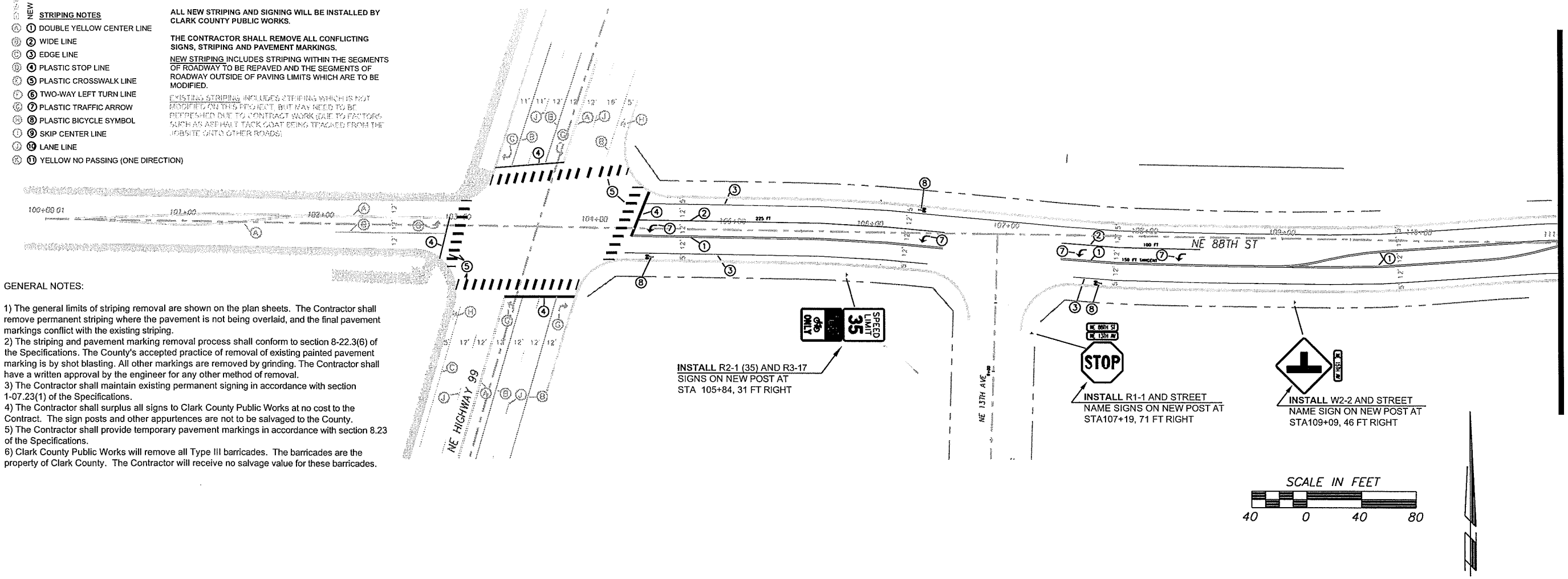

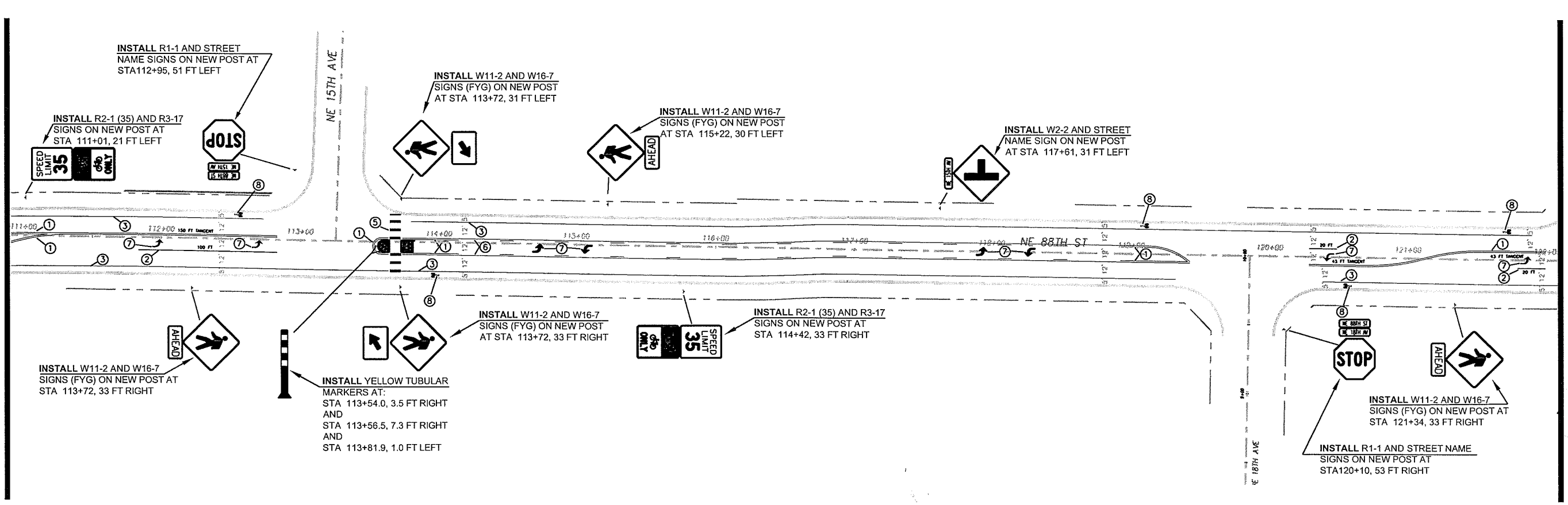

DESIGNED	RK
DRAWN	KB
CRP	321022
HOR.	1"=40'
VERT.	NA
DATE	6/8/04
DWG:	SS1-4
SHEET	SS-5 OF

CALL 48 HOURS BEFORE YOU DIG 1-800-553-4344 "It's the Law" NORTHWEST UTILITIES NOTIFICATION CENTER

PRELIMINARY NOT FOR CONSTRUCTION

DESIGN & ENGINEERING DIVISION
DESIGN SECTION

NE 88TH STREET
SIGNING & STRIPING PLAN

proud past, promising future
CLARK COUNTY WASHINGTON

GENERAL NOTES:

1) The general limits of striping removal are shown on the plan sheets. The Contractor shall remove permanent striping where the pavement is not being overlaid, and the final pavement markings conflict with the existing striping.
2) The striping and pavement marking removal process shall conform to section 8-22.3(6) of the Specifications. The County's accepted practice of removal of existing painted pavement marking is by shot blasting. All other markings are removed by grinding. The Contractor shall have a written approval by the engineer for any other method of removal.
3) The Contractor shall maintain existing permanent signing in accordance with section 1-07.23(1) of the Specifications.
4) The Contractor shall surplus all signs to Clark County Public Works at no cost to the Contract. The sign posts and other appurtences are not to be salvaged to the County.
5) The Contractor shall provide temporary pavement markings in accordance with section 8.23 of the Specifications.
6) Clark County Public Works will remove all Type III barricades. The barricades are the property of Clark County. The Contractor will receive no salvage value for these barricades.

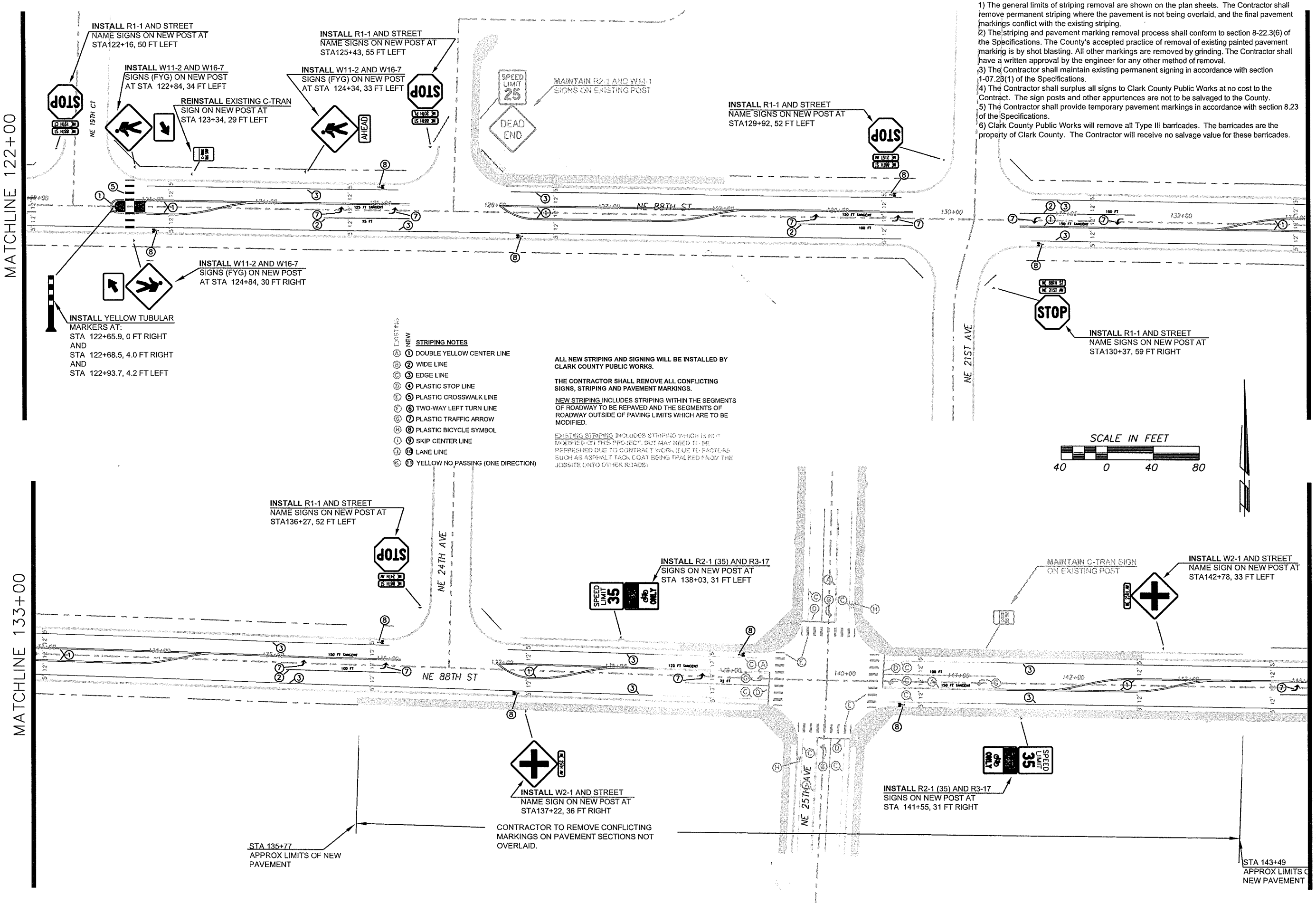

EXISTING NEW

STRIPING NOTES

- (A) (1) DOUBLE YELLOW CENTER LINE
- (B) (2) WIDE LINE
- (C) (3) EDGE LINE
- (D) (4) PLASTIC STOP LINE
- (E) (5) PLASTIC CROSSWALK LINE
- (F) (6) TWO-WAY LEFT TURN LINE
- (G) (7) PLASTIC TRAFFIC ARROW
- (H) (8) PLASTIC BICYCLE SYMBOL
- (I) (9) SKIP CENTER LINE
- (J) (10) LANE LINE
- (K) (11) YELLOW NO PASSING (ONE DIRECTION)

ALL NEW STRIPING AND SIGNING WILL BE INSTALLED BY CLARK COUNTY PUBLIC WORKS.

THE CONTRACTOR SHALL REMOVE ALL CONFLICTING SIGNS, STRIPING AND PAVEMENT MARKINGS.

NEW STRIPING INCLUDES STRIPING WITHIN THE SEGMENTS OF ROADWAY TO BE REPAVED AND THE SEGMENTS OF ROADWAY OUTSIDE OF PAVING LIMITS WHICH ARE TO BE MODIFIED.

EXISTING STRIPING INCLUDES STRIPING WHICH IS NOT MODIFIED ON THIS PROJECT, BUT MAY NEED TO BE REFRESHED DUE TO CONTRACT WORK (DUE TO FACTORS SUCH AS ASPHALT TACK COAT BEING TRACKED FROM THE JOBSITE ONTO OTHER ROADS)

DESIGNED RK
DRAWN KB
CRP 321022
HOR. 1"=40'
VERT. NA
DATE 6/8/04
DWG: SS1-4
SHEET SS-6 OF

CALL 48 HOURS BEFORE YOU DIG
1-800-553-4344
"It's the Law"
NORTHWEST UTILITIES NOTIFICATION CENTER

ROBERT DALE KLUG
STATE OF WASHINGTON
PROFESSIONAL ENGINEER
EXPIRES JULY 29, 2006
PRELIMINARY NOT FOR CONSTRUCTION

DESIGN & ENGINEERING DIVISION
DESIGN SECTION

NE 88TH STREET
SIGNING & STRIPING PLAN

proud past, promising future
CLARK COUNTY
WASHINGTON

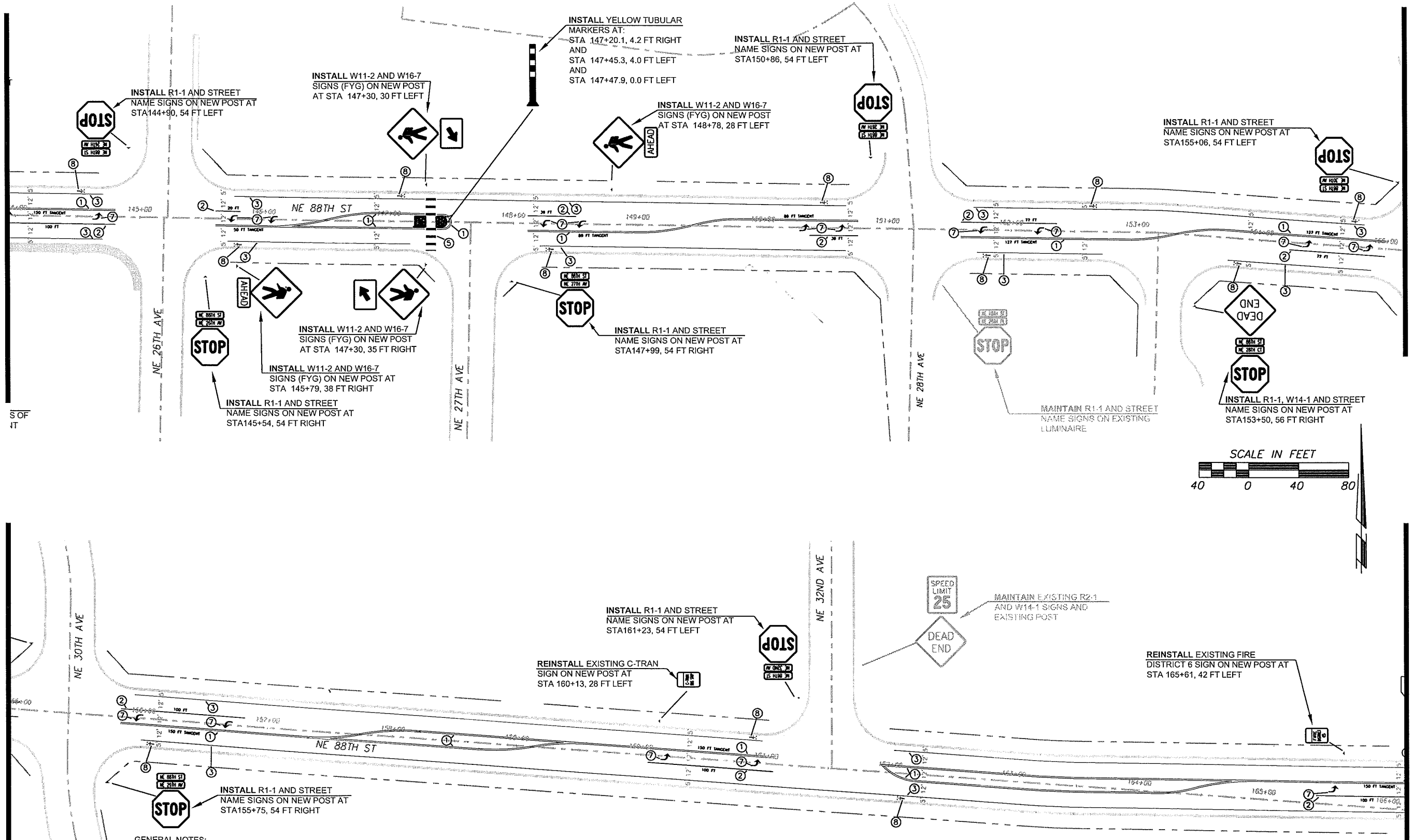

GENERAL NOTES:

1) The general limits of striping removal are shown on the plan sheets. The Contractor shall remove permanent striping where the pavement is not being overlaid, and the final pavement markings conflict with the existing striping.
2) The striping and pavement marking removal process shall conform to section 8-22.3(6) of the Specifications. The County's accepted practice of removal of existing painted pavement marking is by shot blasting. All other markings are removed by grinding. The Contractor shall have a written approval by the engineer for any other method of removal.
3) The Contractor shall maintain existing permanent signing in accordance with section 1-07.23(1) of the Specifications.
4) The Contractor shall surplus all signs to Clark County Public Works at no cost to the Contract. The sign posts and other appurtences are not to be salvaged to the County.
5) The Contractor shall provide temporary pavement markings in accordance with section 8.23 of the Specifications.
6) Clark County Public Works will remove all Type III barricades. The barricades are the property of Clark County. The Contractor will receive no salvage value for these barricades.

EXISTING	NEW	STRIPING NOTES
A	1	DOUBLE YELLOW CENTER LINE
B	2	WIDE LINE
C	3	EDGE LINE
D	4	PLASTIC STOP LINE
E	5	PLASTIC CROSSWALK LINE
F	6	TWO-WAY LEFT TURN LINE
G	7	PLASTIC TRAFFIC ARROW
H	8	PLASTIC BICYCLE SYMBOL
I	9	SKIP CENTER LINE
J	10	LANE LINE
K	11	YELLOW NO PASSING (ONE DIRECTION)

ALL NEW STRIPING AND SIGNING WILL BE INSTALLED BY CLARK COUNTY PUBLIC WORKS.

THE CONTRACTOR SHALL REMOVE ALL CONFLICTING SIGNS, STRIPING AND PAVEMENT MARKINGS.

NEW STRIPING INCLUDES STRIPING WITHIN THE SEGMENTS OF ROADWAY TO BE REPAVED AND THE SEGMENTS OF ROADWAY OUTSIDE OF PAVING LIMITS WHICH ARE TO BE MODIFIED.

EXISTING STRIPING INCLUDES STRIPING WHICH IS NOT MODIFIED ON THIS PROJECT, BUT MAY NEED TO BE REFRESHED DUE TO CONTRACT WORK (DUE TO FACTORS SUCH AS ASPHALT TACK COAT BEING TRACKED FROM THE JOBSITE ONTO OTHER ROADS)

DESIGNED RK
DRAWN KB
CRP 321022
HOR. 1"=40'
VERT. NA
DATE 6/8/04
DWG: SS1-4
SHEET SS-7 OF

CALL 48 HOURS BEFORE YOU DIG
1-800-553-4344
"It's the Law"
NORTHWEST UTILITIES NOTIFICATION CENTER

RODNEY DALE KLUG
STATE OF WASHINGTON
PROFESSIONAL ENGINEER
EXPIRES JULY 29, 2006
PRELIMINARY NOT FOR CONSTRUCTION

DESIGN & ENGINEERING DIVISION
DESIGN SECTION

NE 88TH STREET
SIGNING & STRIPING PLAN

proud past, promising future
CLARK COUNTY WASHINGTON

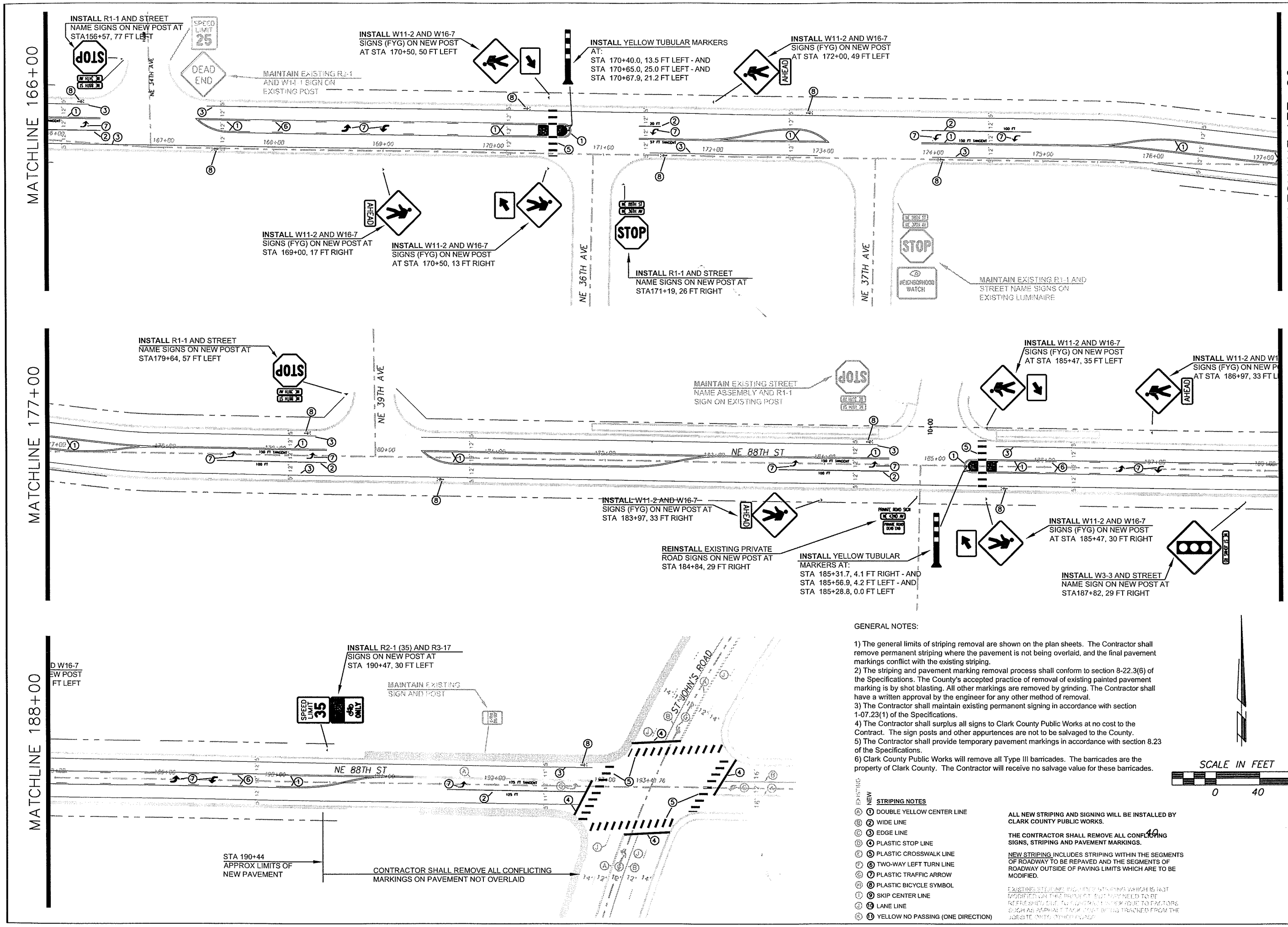

GENERAL NOTES:

1) The general limits of striping removal are shown on the plan sheets. The Contractor shall remove permanent striping where the pavement is not being overlaid, and the final pavement markings conflict with the existing striping.
2) The striping and pavement marking removal process shall conform to section 8-22.3(6) of the Specifications. The County's accepted practice of removal of existing painted pavement marking is by shot blasting. All other markings are removed by grinding. The Contractor shall have a written approval by the engineer for any other method of removal.
3) The Contractor shall maintain existing permanent signing in accordance with section 1-07.23(1) of the Specifications.
4) The Contractor shall surplus all signs to Clark County Public Works at no cost to the Contract. The sign posts and other appurtences are not to be salvaged to the County.
5) The Contractor shall provide temporary pavement markings in accordance with section 8.23 of the Specifications.
6) Clark County Public Works will remove all Type III barricades. The barricades are the property of Clark County. The Contractor will receive no salvage value for these barricades.

SCALE IN FEET

0 40 80

EXISTING	NEW	STRIPING NOTES
(A)	(1)	DOUBLE YELLOW CENTER LINE
(B)	(2)	WIDE LINE
(C)	(3)	EDGE LINE
(D)	(4)	PLASTIC STOP LINE
(E)	(5)	PLASTIC CROSSWALK LINE
(F)	(6)	TWO-WAY LEFT TURN LINE
(G)	(7)	PLASTIC TRAFFIC ARROW
(H)	(8)	PLASTIC BICYCLE SYMBOL
(I)	(9)	SKIP CENTER LINE
(J)	(10)	LANE LINE
(K)	(11)	YELLOW NO PASSING (ONE DIRECTION)

ALL NEW STRIPING AND SIGNING WILL BE INSTALLED BY CLARK COUNTY PUBLIC WORKS.

THE CONTRACTOR SHALL REMOVE ALL CONFLICTING SIGNS, STRIPING AND PAVEMENT MARKINGS.

NEW STRIPING INCLUDES STRIPING WITHIN THE SEGMENTS OF ROADWAY TO BE REPAVED AND THE SEGMENTS OF ROADWAY OUTSIDE OF PAVING LIMITS WHICH ARE TO BE MODIFIED.

EXISTING STRIPING INCLUDES STRIPING WHICH IS NOT MODIFIED ON THIS PROJECT, BUT MAY NEED TO BE REPRESHOT DUE TO CONDITIONS OUTSIDE DUE TO FACTORS SUCH AS ASPHALT TACK COAT BEING TRACKED FROM THE JOBSITE ONTO EXISTING LANE.

DESIGNED RK
DRAWN KB
CRP 321022
HOR. 1"=40'
VERT. NA
DATE 6/8/04
DWG: SS1-4
SHEET SS-8 OF

CALL 48 HOURS BEFORE YOU DIG
1-800-553-4344
"It's the Law"
NORTHWEST UTILITIES NOTIFICATION CENTER

PRELIMINARY NOT FOR CONSTRUCTION
EXPIRES JULY 29, 2006

DESIGN & ENGINEERING DIVISION
DESIGN SECTION

NE 88TH STREET
SIGNING & STRIPING PLAN

CLARK COUNTY WASHINGTON
proud past, promising future

INTERSECTION STRIPING LAYOUT DETAIL

SCALE - 1 IN = 20 FT

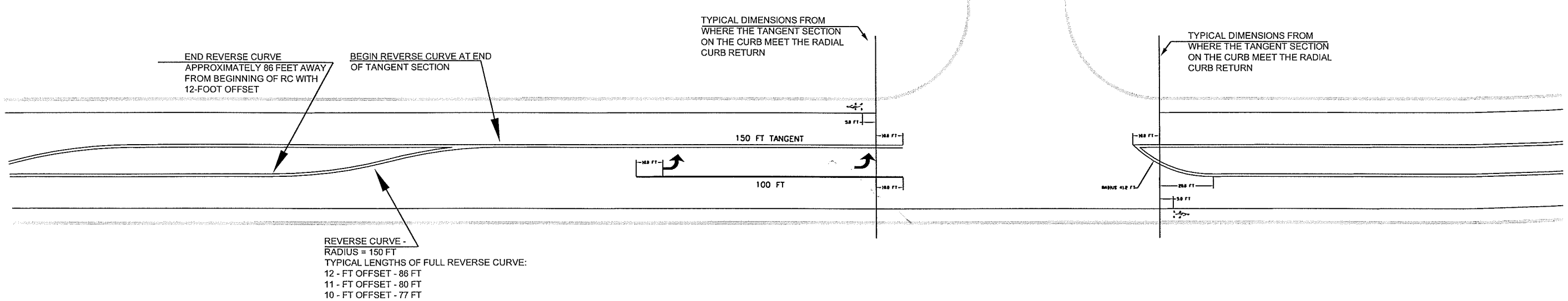

PEDESTRIAN REFUGE ISLAND DETAIL

SCALE - 1 IN = 4 FT

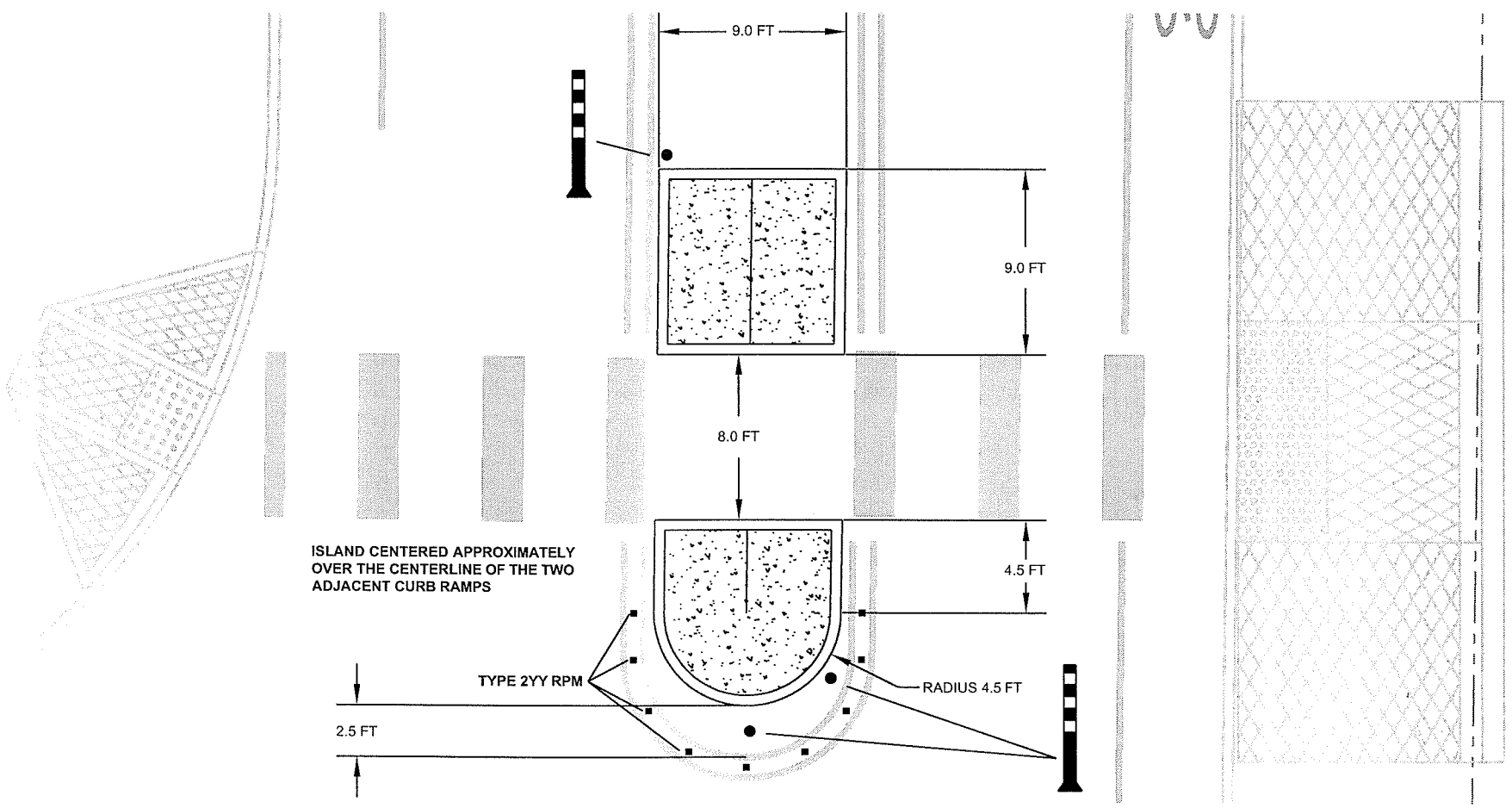

PEDESTRIAN REFUGE ISLAND CROSS SECTION DETAIL

NO SCALE

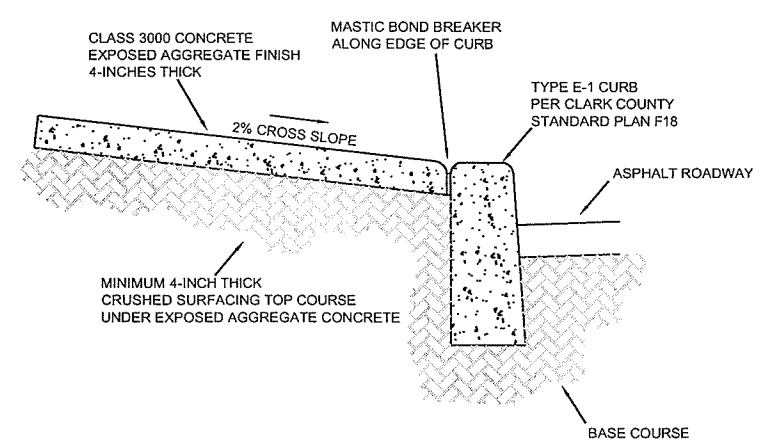

DESIGNED RK
DRAWN KB
CRP 321022
HOR. 1"=40'
VERT. NA
DATE 6/8/04
DWG: SS1-4
SHEET SS-9 OF

CALL 48 HOURS BEFORE YOU DIG
1-800-553-4344
"It's the Law"
NORTHWEST UTILITIES NOTIFICATION CENTER

PRELIMINARY NOT FOR CONSTRUCTION

DESIGN & ENGINEERING DIVISION
DESIGN SECTION

NE 88TH STREET
STRIPING AND PEDESTRIAN REFUGE DETAILS

proud past. promising future
CLARK COUNTY
WASHINGTON

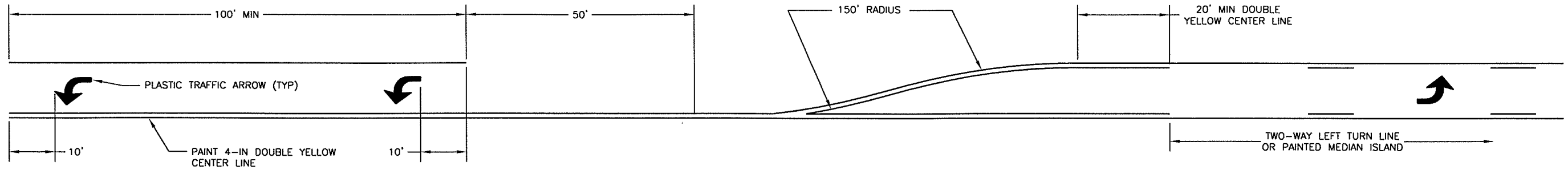

TYPICAL LEFT TURN POCKET

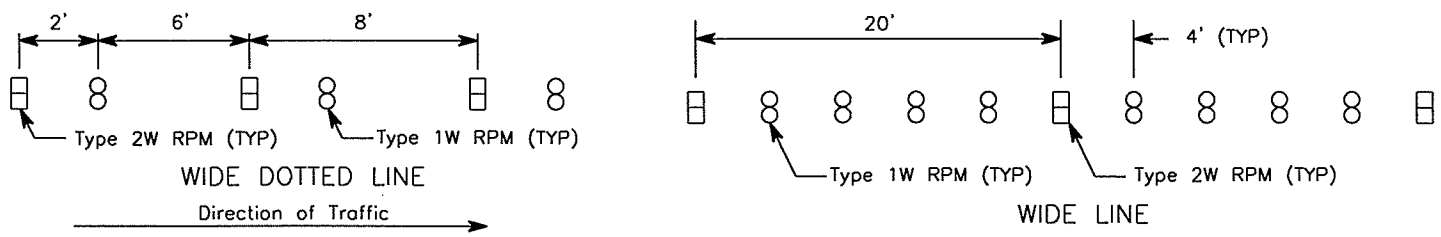

WIDE DOTTED LINE

WIDE LINE

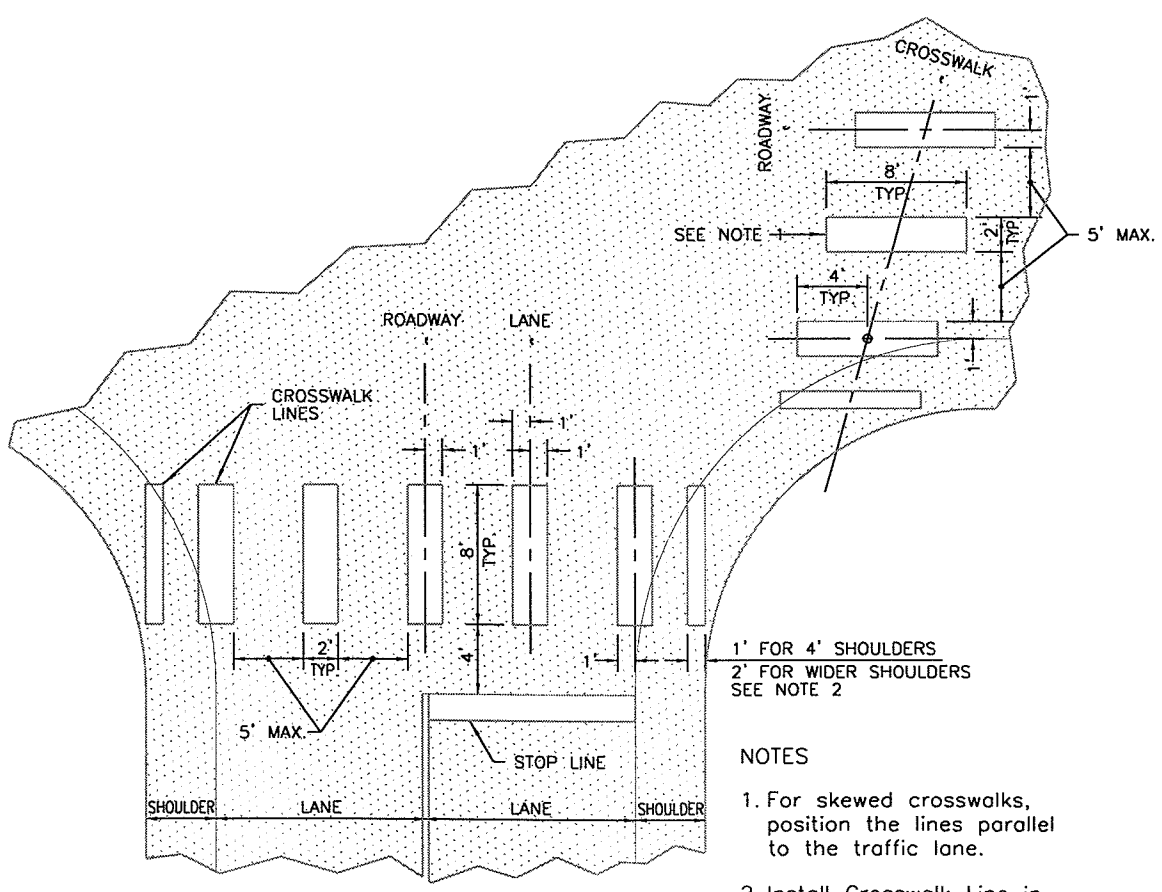

STANDARD PATTERN

NOTES

1. For skewed crosswalks, position the lines parallel to the traffic lane.
2. Install Crosswalk Line in shoulder area only when adjacent to sidewalk or separate walkway.

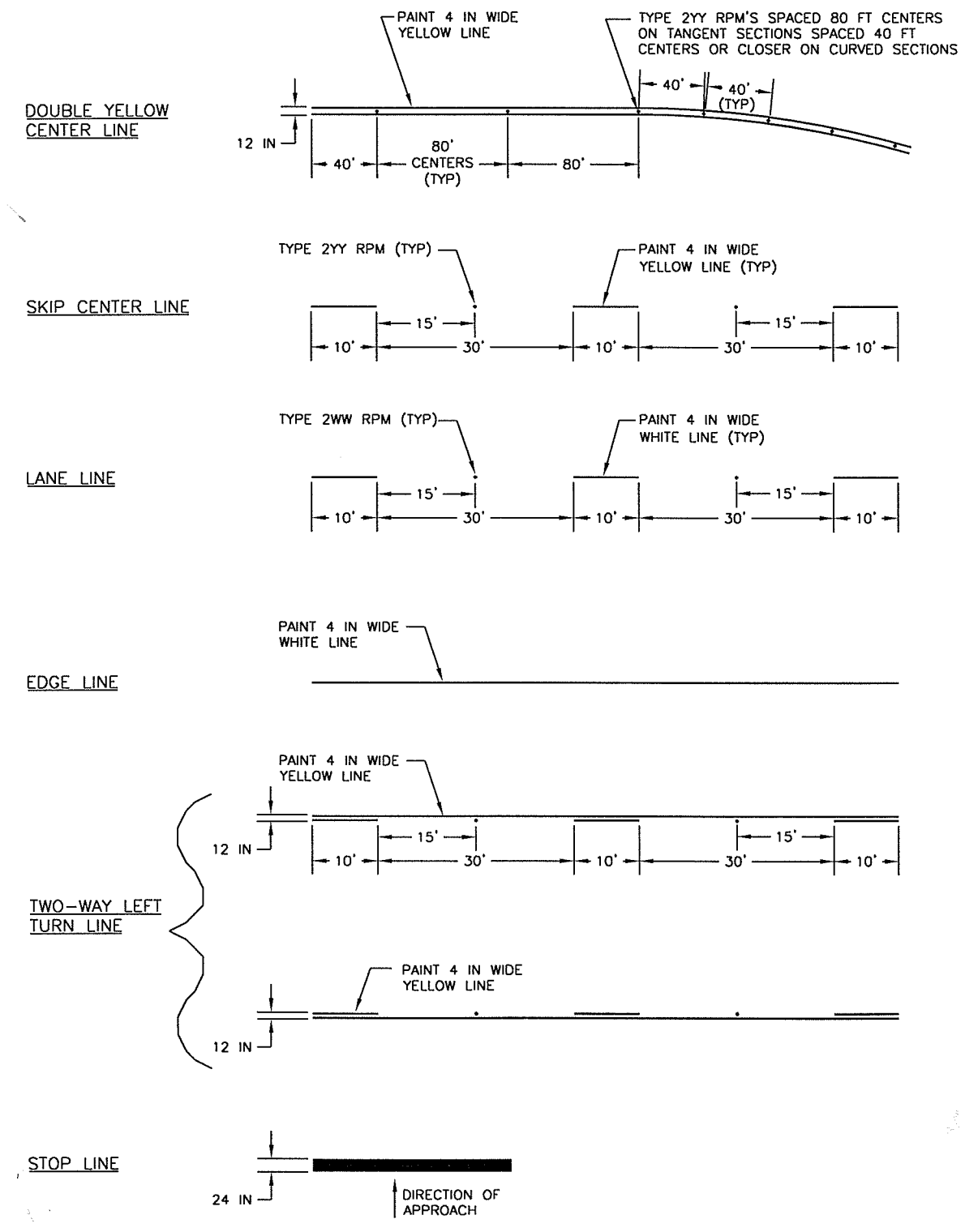

DESIGNED RK
DRAWN KB
CRP 321022
HOR. NA
VERT. NA
DATE 7/6/04
DWG: SSD01
SHEET SS-10DF

CALL 48 HOURS BEFORE YOU DIG
1-800-553-4344
"It's the Law"
NORTHWEST UTILITIES NOTIFICATION CENTER

ROBERT DALE KLUG
STATE OF WASHINGTON
PRELIMINARY NOT FOR CONSTRUCTION
REGISTERED PROFESSIONAL ENGINEER
EXPIRES: JULY 29, 2006

DESIGN & ENGINEERING DIVISION
DESIGN SECTION

NE 88TH STREET
SIGNING & STRIPING DETAILS

proud past, promising future
CLARK COUNTY
WASHINGTON