REGION NO.	STATE	FED. AID PROJECT NO.	SHEET NO.
8	WASH.	S-0351 (3)	1 of 10

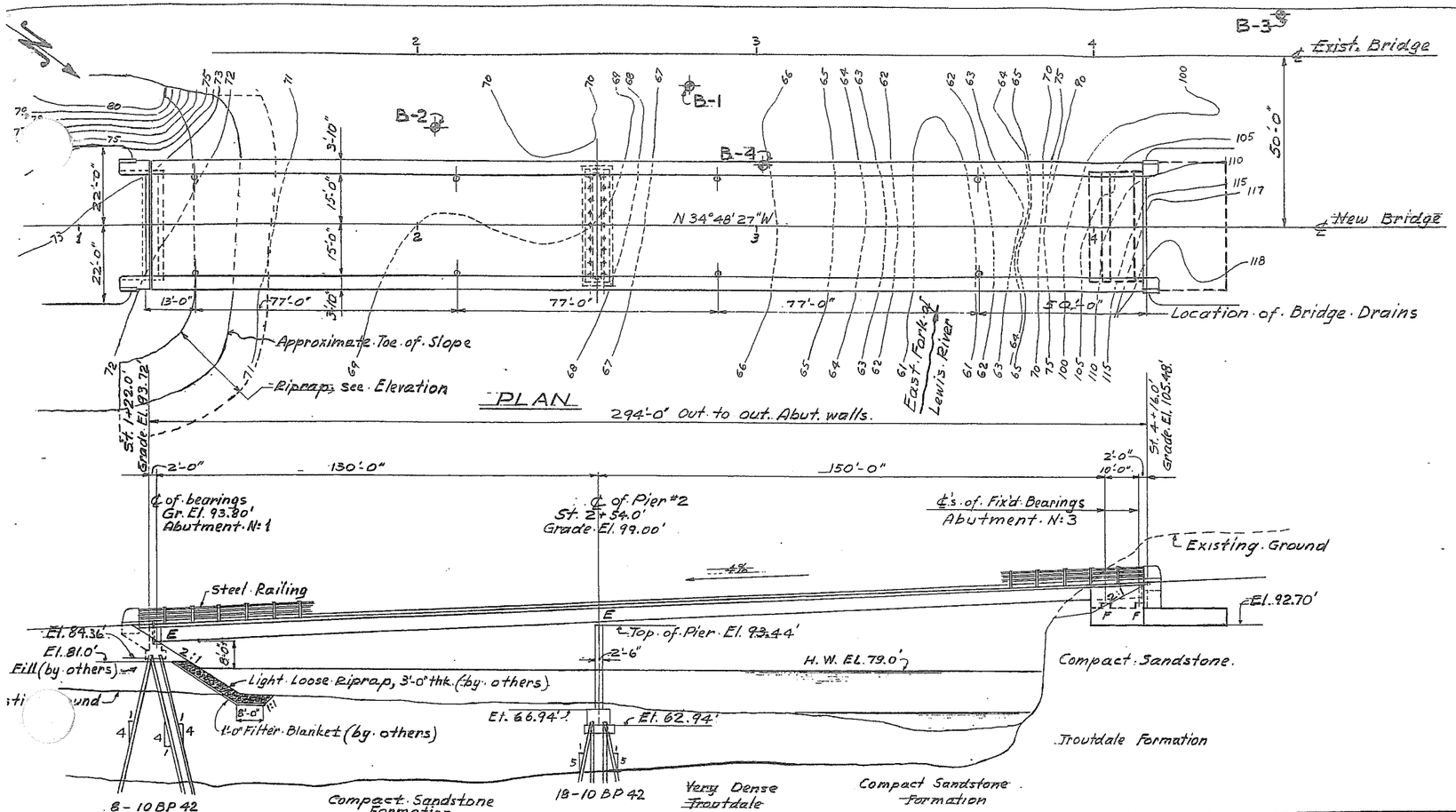

Steel piling shall be driven not less than 5'-0" into sandstone formation.

ELEVATION

Note: Grade Elevations given @ ℄ of Roadway.

U.S.G.S. DATUM

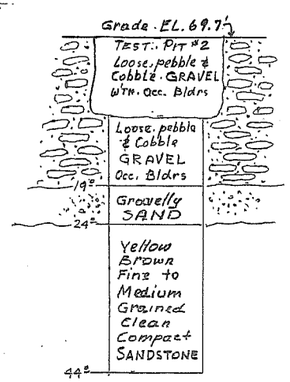

B-2
St. 2+05.0'
21.0' Right

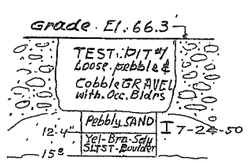

B-1
St. 2+80.0'
9.0' Right

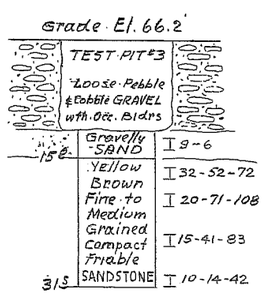

B-4
St. 3+02.0'
32.5' Right

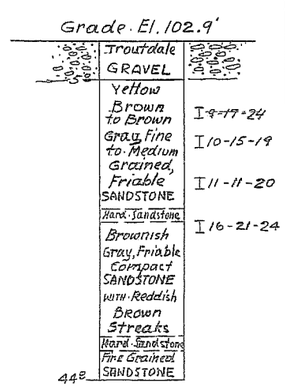

B-3
St. 4+55.5'
13.0' Left

TEST HOLE DATA

Note: ℄ of Existing Bridge is the survey line for the test holes.
I — Standard Penetrating Test - Blows/6 inches

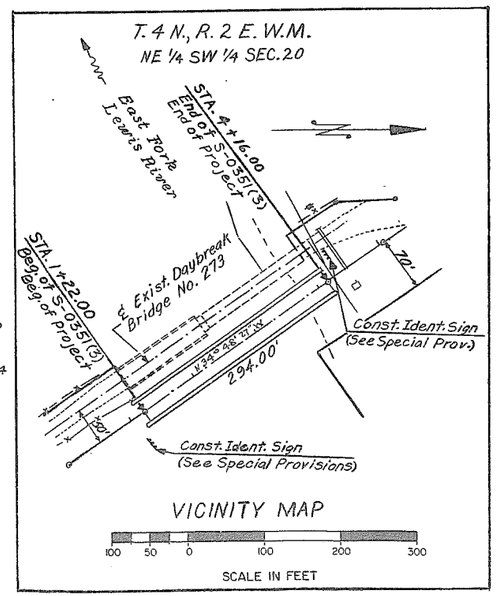

GENERAL NOTES

All material and work shall be in accordance with the requirements of the State of Washington Department of Highways Standard Specifications for Road and Bridge Construction, dated 1963, and attached Special Provisions.

All welding shall conform to the Standard Specifications for Welded Highway and Railroad Bridges (1963) by the American Welding Society and attached Special Provisions. All welding shall be equal in strength to the parent metal.

Structural steel shall be High-strength Low-alloy Steel conforming to A.S.T.M. specifications A 441, unless noted.

Welding sequence: Flange plate splices, web splices, flange plates to web, stiffeners to web and flanges, and lateral plates to bottom flanges.

All transverse stiffeners and web splices shall be vertical.

The girder sections shall be handled carefully to prevent damage to the girders. If necessary, temporary stiffening shall be provided to prevent buckling during erection.

False work bents shall be removed before slab is poured.

Attachments and holes used to facilitate erection, and cope holes at field splices, shall be removed, filled, and ground to povide a smooth surface.

Concrete in the roadway slab shall be Class "LT" mix, with light weight aggregate producing concrete weighing not more than 120 lbs. per cubic foot.

Concrete in abutments shall be Class "A" mix.

Concrete in footings at Abutment No 1 and Pier No 2 and in pier wall shall be Class "B" mix.

Concrete in footing at Abutment No 3 shall be Class "C" mix.

Bolts marked H.S. on the plans shall be High Strength Bolts, A.S.T.M. A-325.

Steel piling shall conform to A.S.T.M. specification A-7 and shall be driven into the compact sandstone formation to a depth sufficient to provide a minimum load bearing capacity of 56 tons, but not less than 5'-0"

One test pile shall be driven at Abutment No 1, and one at Pier No 2. Test piles shall remain in place and become part of the respective pile groups.

PROJECT LIMITS:
Sta. 1+22.0 to
Sta. 4+16.0

SUMMARY OF QUANTITIES

LENGTH:
294.0 Lin. Ft.
0.056 Mile

NO.	ITEM	QUANTITY	UNIT
1	Structure Excavation	1,400	Cu. Yd.
2	Shoring and Cribs or Extra Excavation	Lump Sum	L.S.
3	Mechanical Tamper	48	Hours
4	Furnishing and Driving Steel Test Piles	2	Only
5	Furnishing Steel Piling	694	Lin. Ft
6	Driving Steel Piles	24	Only
7	Concrete Class LT	330	Cu. Yds
8	Concrete Class A	63	Cu. Yds
9	Concrete Class B	123	Cu. Yds
10	Concrete Class C	266	Cu. Yds
11	Concrete Class D	24	Cu. Yds
12	Steel Reinforcing Bars	117,000	Pounds
13	Structural Low Alloy Steel	Lump Sum	L.S.
14	Bridge Railing	592	Lin. Ft.
15	Special Bridge Drains	8	Only
16	Water Reducing Additive	Est. 430	Dollars
17	Removing Existing Structure	Lump Sum	L.S.

NOTE: For Special Features see Special Provisions.

LOADING: HS-20

Bridge # 273

CECIL D. KINDER STATE OF WASHINGTON REGISTERED WATER & LAND SURVEYOR

F.A.S. — S-0351(3)

DAYBREAK BRIDGE
OVER
EAST FORK OF LEWIS RIVER
CLARK COUNTY, WASH.

LAYOUT

Approved: July 27, 1966

Director of Highways

JIM D. KING STATE OF WASHINGTON PROJECT STRUCTURAL ENGINEER

HARRY R. POWELL & ASSOCIATES
CONSULTING ENGINEERS
SMITH TOWER SEATTLE, WASH.

DESIGNED BY: J.B.N.G. CHECKED BY: D.R.M.
DRAWN BY: I.M.P. DATE: MAY-31, 1966 SHEET 1 to 10 INC.

REGION NO.	STATE	FED. AID PROJECT NO.	SHEET NO.
8	WASH.	S-0351 (3)	2 of 10

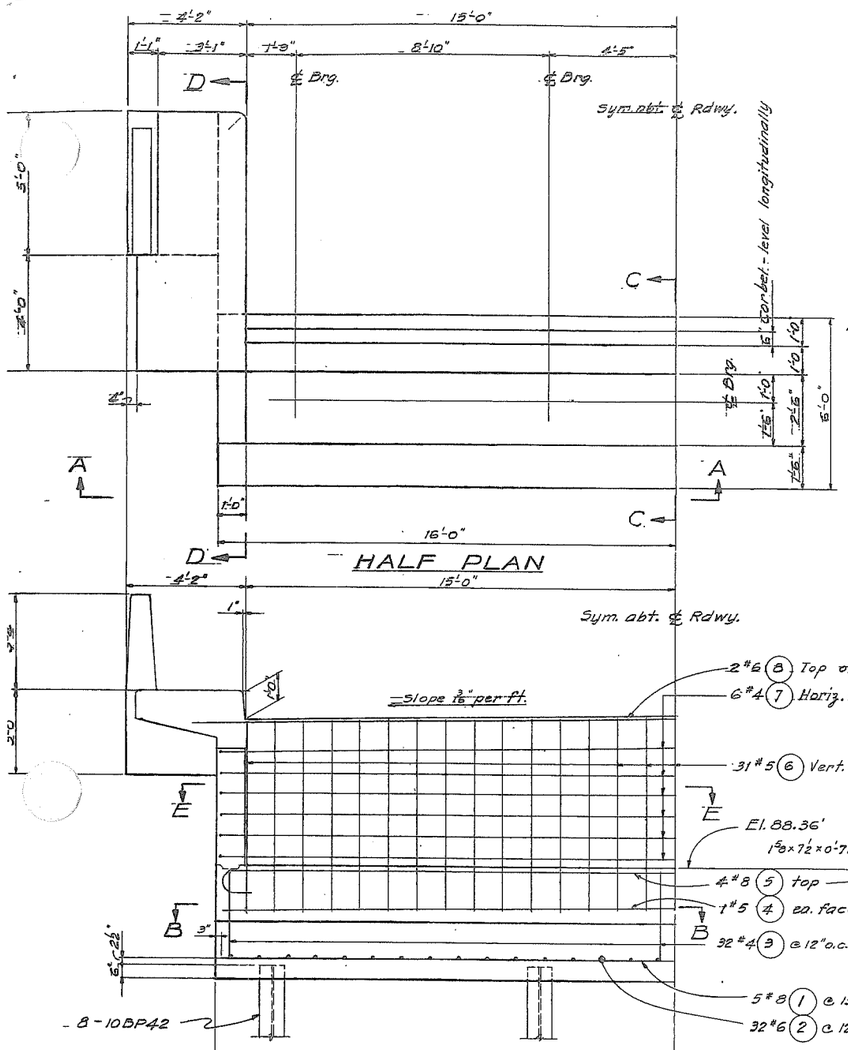

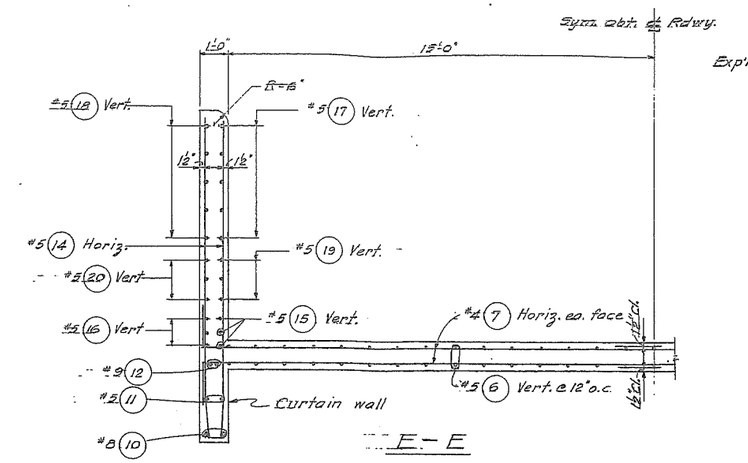

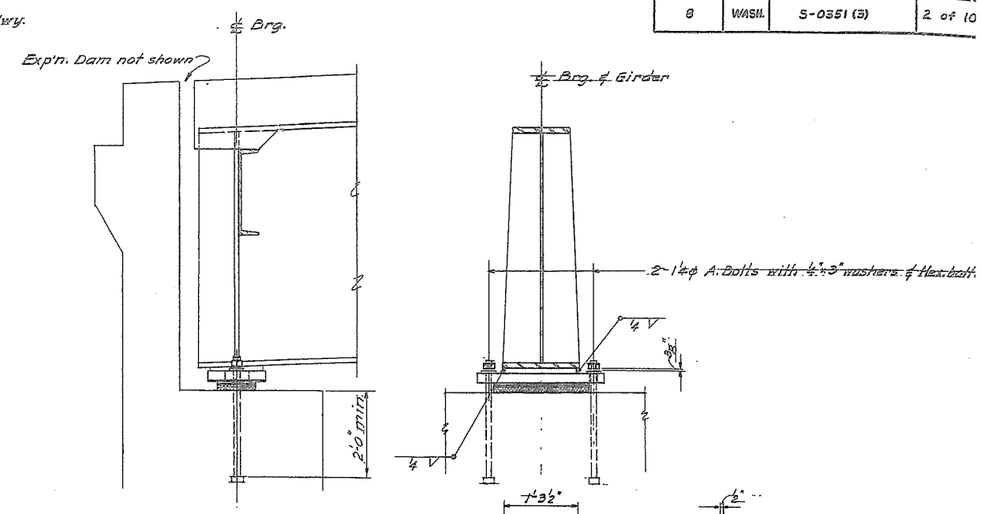

ABUTMENT 1 BEARINGS

4 Sets required

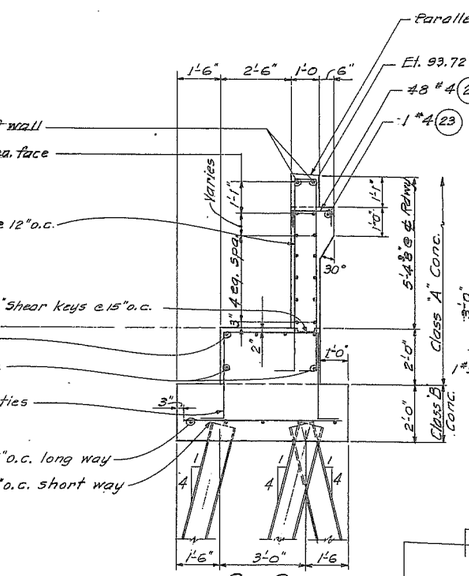

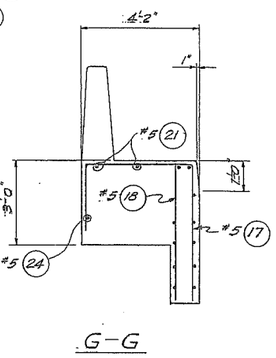

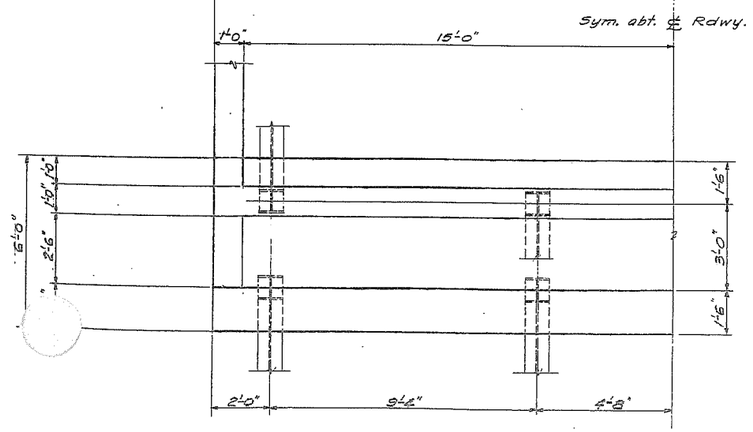

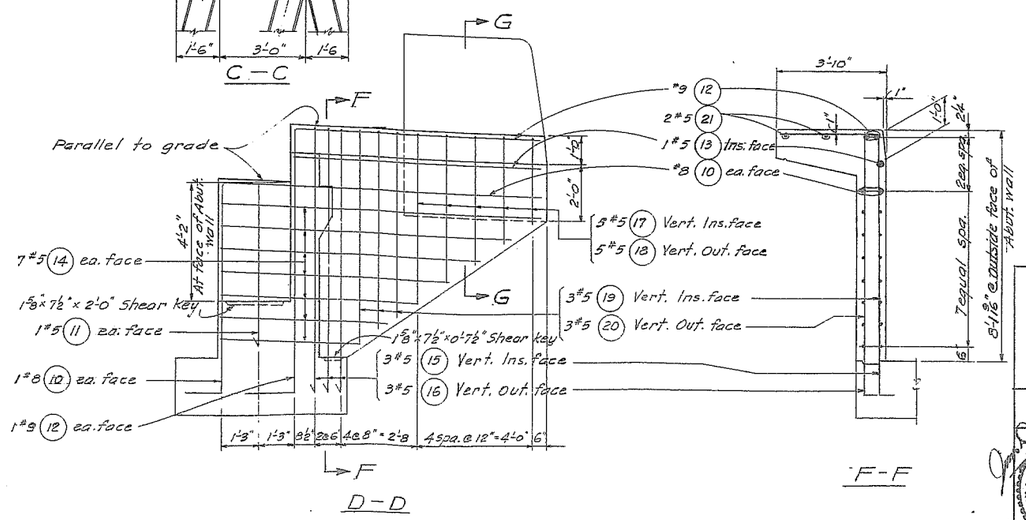

F.A.S. – S-0351 (3)

DAYBREAK BRIDGE

OVER

EAST FORK OF LEWIS RIVER

CLARK COUNTY, WASH.

ABUTMENT 1

HARRY R. POWELL & ASSOCIATES

CONSULTING ENGINEERS

SMITH TOWER SEATTLE, WASH.

DESIGNED BY: J. PING CHECKED BY: D.R.M.

DRAWN BY: R.M.N. DATE: May 31, 1965

SHEET NO. 2 OF

REGION NO.	STATE	FED. AID PROJECT NO.	SHEET NO.
8	WASH.	S-0351(3)	3 of 10

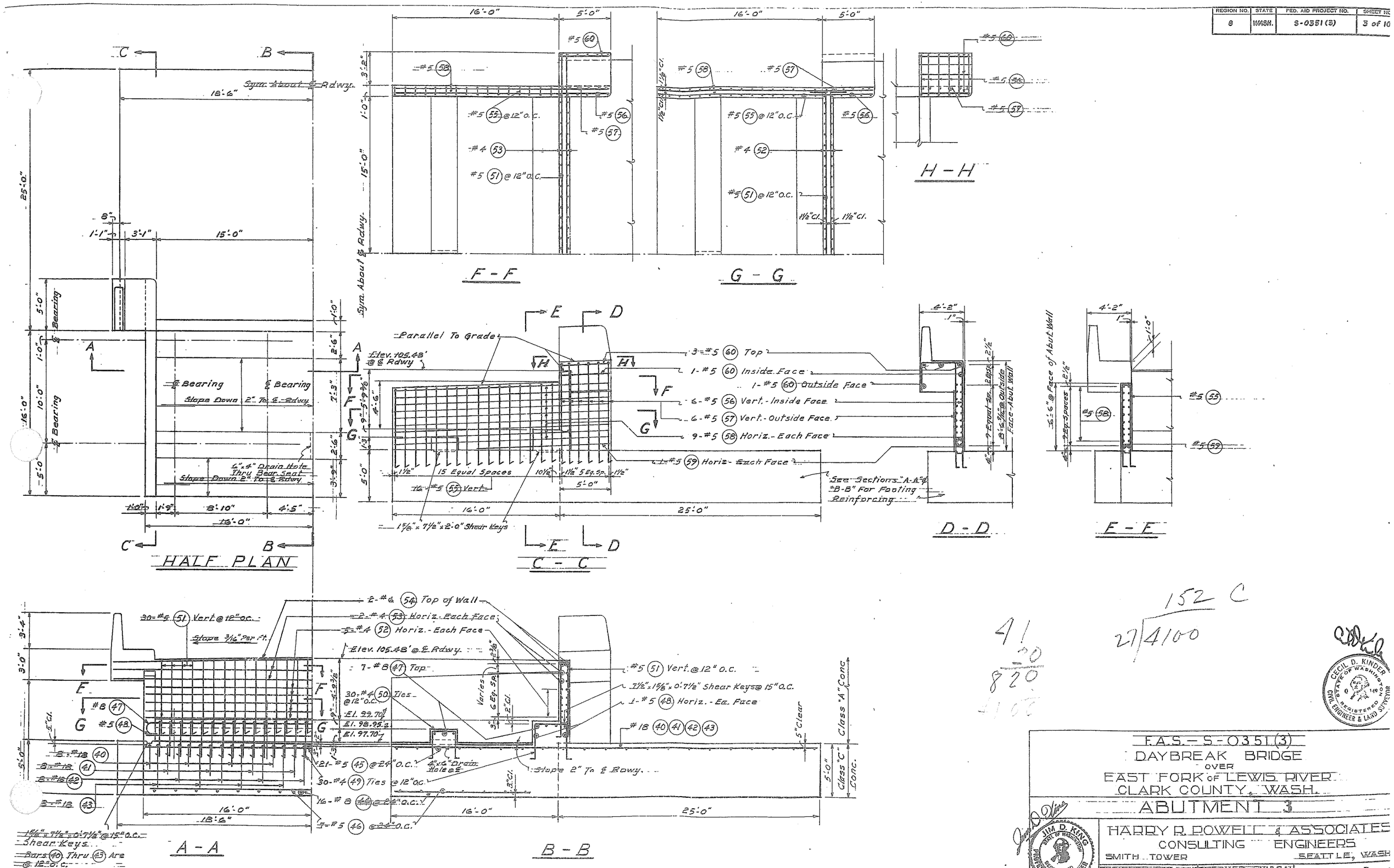

152 C

27 | 4100

41
20
820
4100

F.A.S. - S-0351(3)

DAYBREAK BRIDGE

OVER

EAST FORK OF LEWIS RIVER

CLARK COUNTY, WASH.

ABUTMENT 3

HARRY R. POWELL & ASSOCIATES

CONSULTING ENGINEERS

SMITH TOWER SEATTLE, WASH.

DESIGNED BY: J. KING | CHECKED BY: D.R.M.

DRAWN BY: G.R. | DATE: MAY 31, 1966 | SHEET NO. 3 OF

CECIL D. KINDER, STATE OF WASHINGTON, REGISTERED CIVIL ENGINEER & LAND SURVEYOR

JIM D. KING, STATE OF WASHINGTON, REGISTERED PROFESSIONAL ENGINEER

REGION NO.	STATE	FED. AID PROJECT NO.	SHEET
8	WASH.	S-0351(3)	4 of

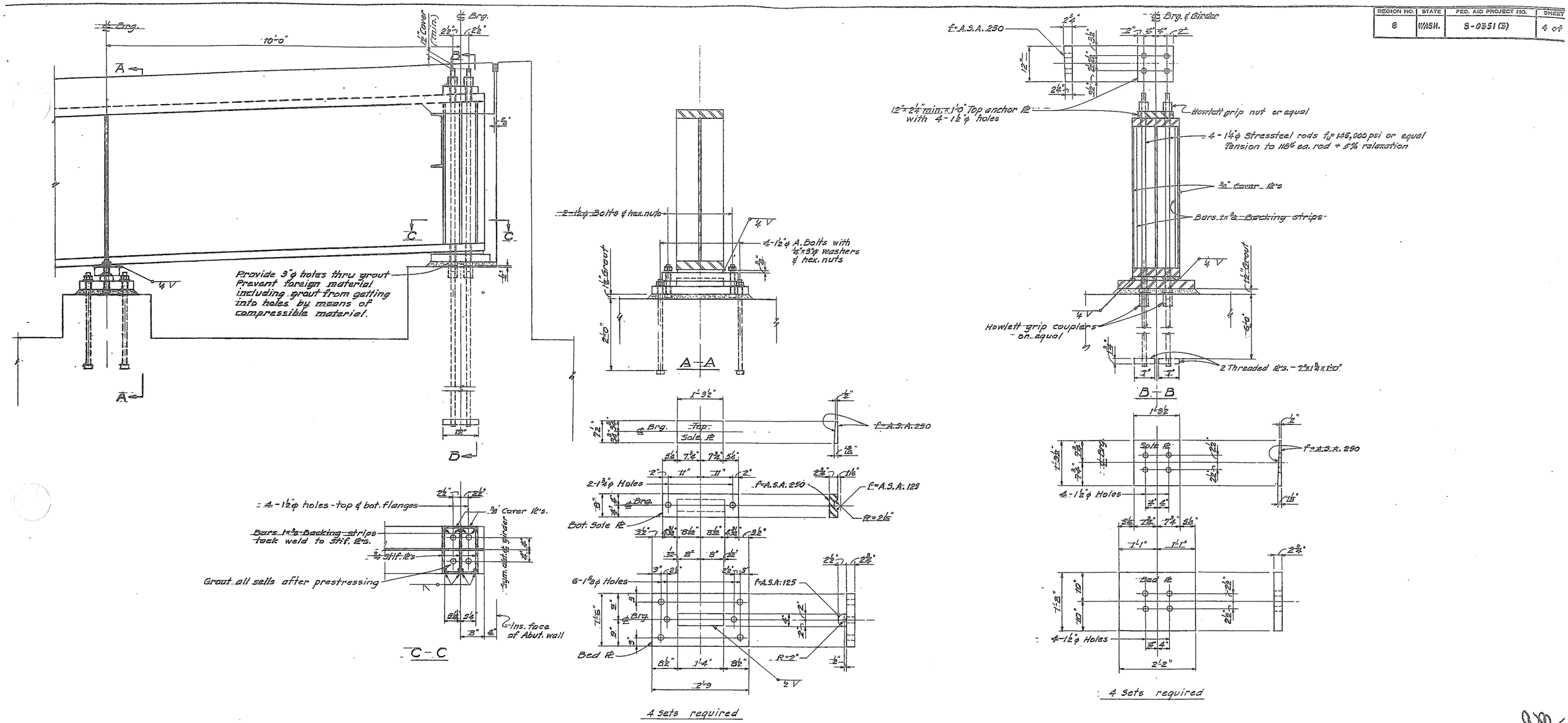

F.A.S.-S-0351(3)
DAYBREAK BRIDGE
OVER
FAST FORK OF LEWIS RIVER
CLARK COUNTY, WASH.
BEARINGS - ABUT. 8

HARRY R. POWELL & ASSOCIATE
CONSULTING ENGINEERS
SMITH TOWER SEATTLE, WAS

DESIGNED BY: J. KING CHECKED BY: D.P.M.
DRAWN BY: A.M.N. DATE: MAY 31, 1966
SHEET NO. 4 OF

REGION NO.	STATE	FED. AID PROJECT NO.	SHEET NO.
6	WASH.	S-0351 (3)	5 of 10

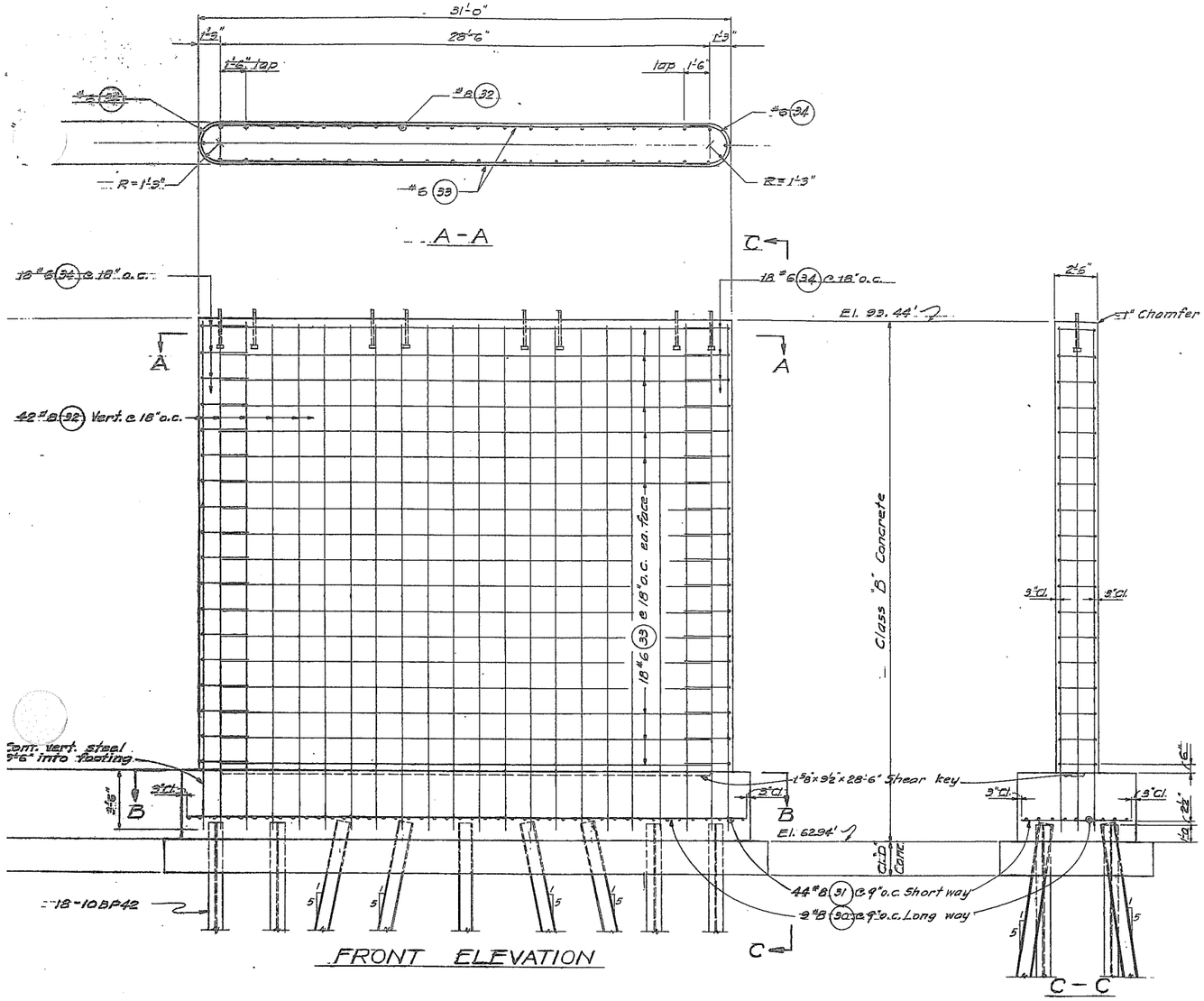

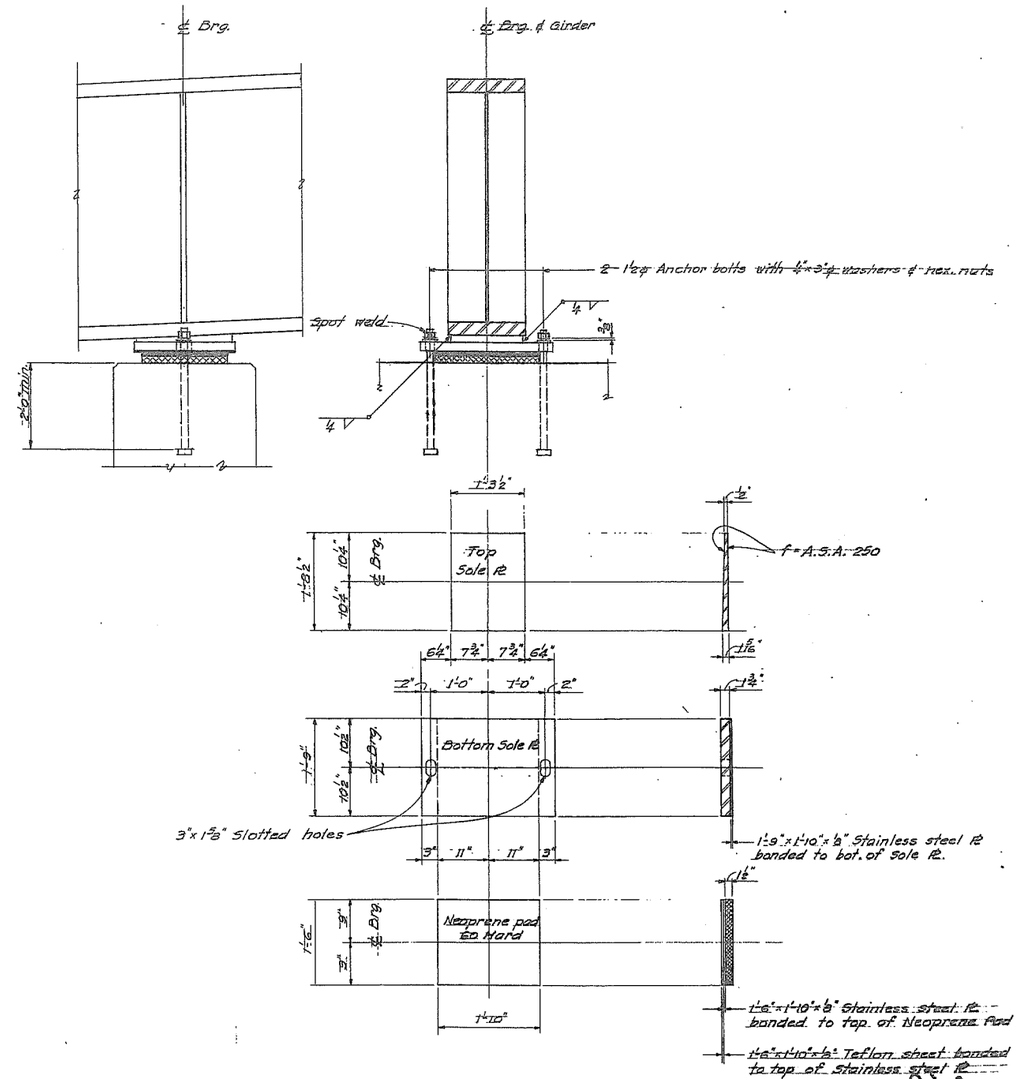

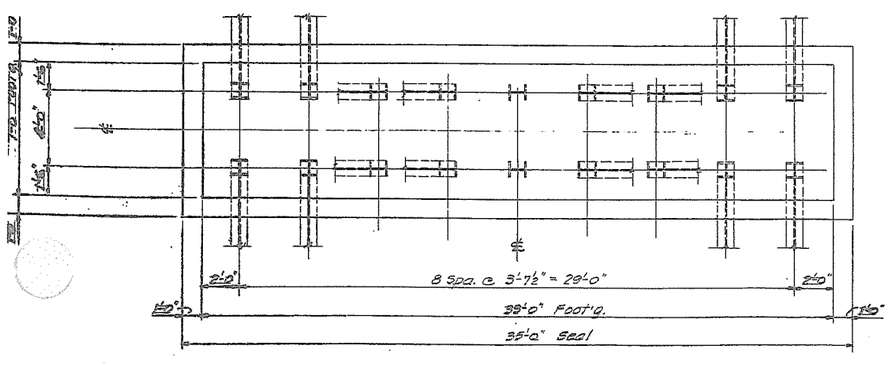

34.2

23.33 27.0

CECIL D. KINDER
STATE OF WASHINGTON
REGISTERED
CIVIL ENGINEER & LAND SURVEYOR

F.A.S.-S-0351 (3)

DAYBREAK BRIDGE

OVER

EAST FORK OF LEWIS RIVER

CLARK COUNTY, WASH.

PIER 2

JIM D. KING
STATE OF WASHINGTON
REGISTERED
PROFESSIONAL ENGINEER

HARRY R. POWELL & ASSOCIATES

CONSULTING ENGINEERS

SMITH TOWER SEATTLE, WASH.

DESIGNED BY: J. KING CHECKED BY: D.P.M.

DRAWN BY: A.M.N. DATE: MAY 31, 1966

SHEET NO. 5 OF 10

REGION NO.	STATE	FED. AID PROJECT NO.	SHEET NO.
8	WASH.	S-0351 (3)	6 of 10

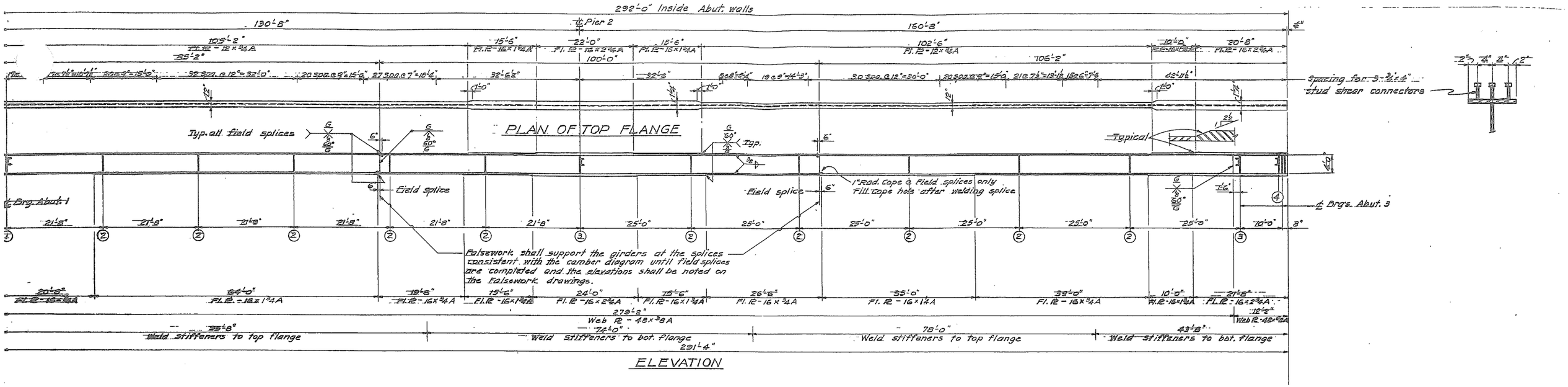

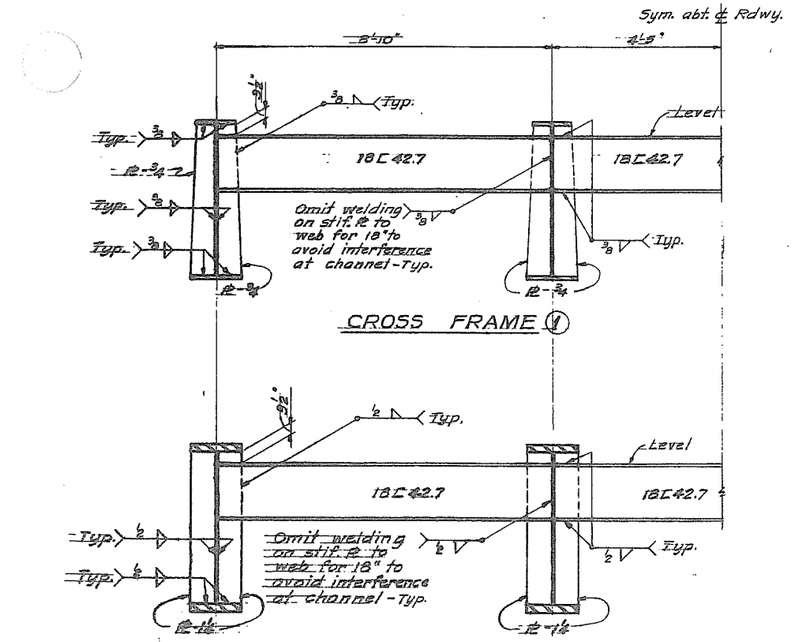

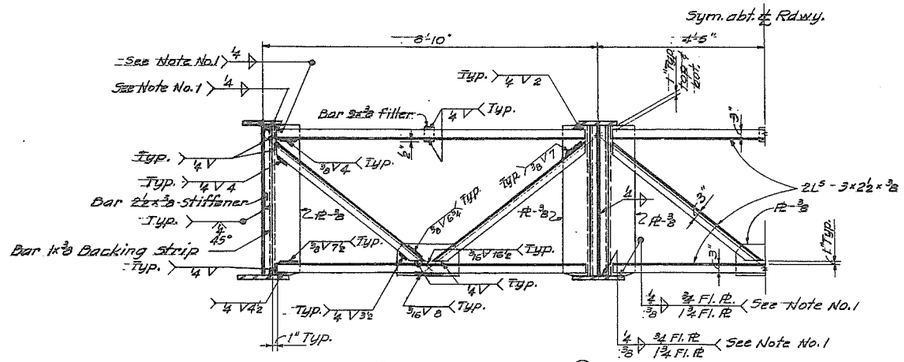

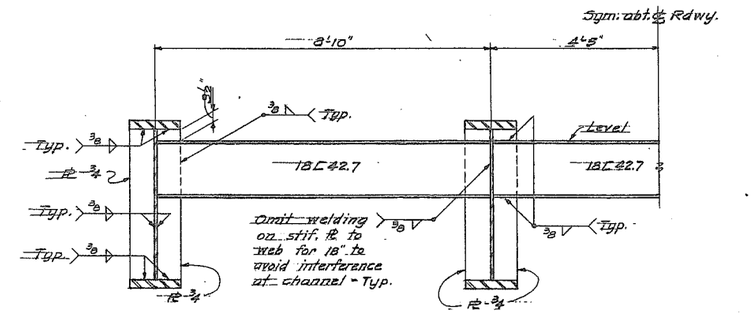

Note No. 1: See Girder elevation for line of dimensions showing whether stiffeners shall be welded to top, bottom or both flanges.
Welding for near side L's of Frame (2) shown.
Welding for far side L's of Frame (2) same

F.A.S. - S-0351(3)
DAYBREAK BRIDGE
OVER
EAST FORK of LEWIS RIVER
CLARK COUNTY, WASH.
STEEL GIRDERS

HARRY R. POWELL & ASSOCIATES
CONSULTING ENGINEERS
SMITH TOWER SEATTLE, WASH.

DESIGNED BY: J. KING | CHECKED BY: D.P.M.
DRAWN BY: A.M.M. | DATE: MAY 31, 1956 | SHEET NO. 6 OF 1

REGION NO.	STATE	FED. AID PROJECT NO.	SHEET
8	WASH.	S-0351 (3)	7 of

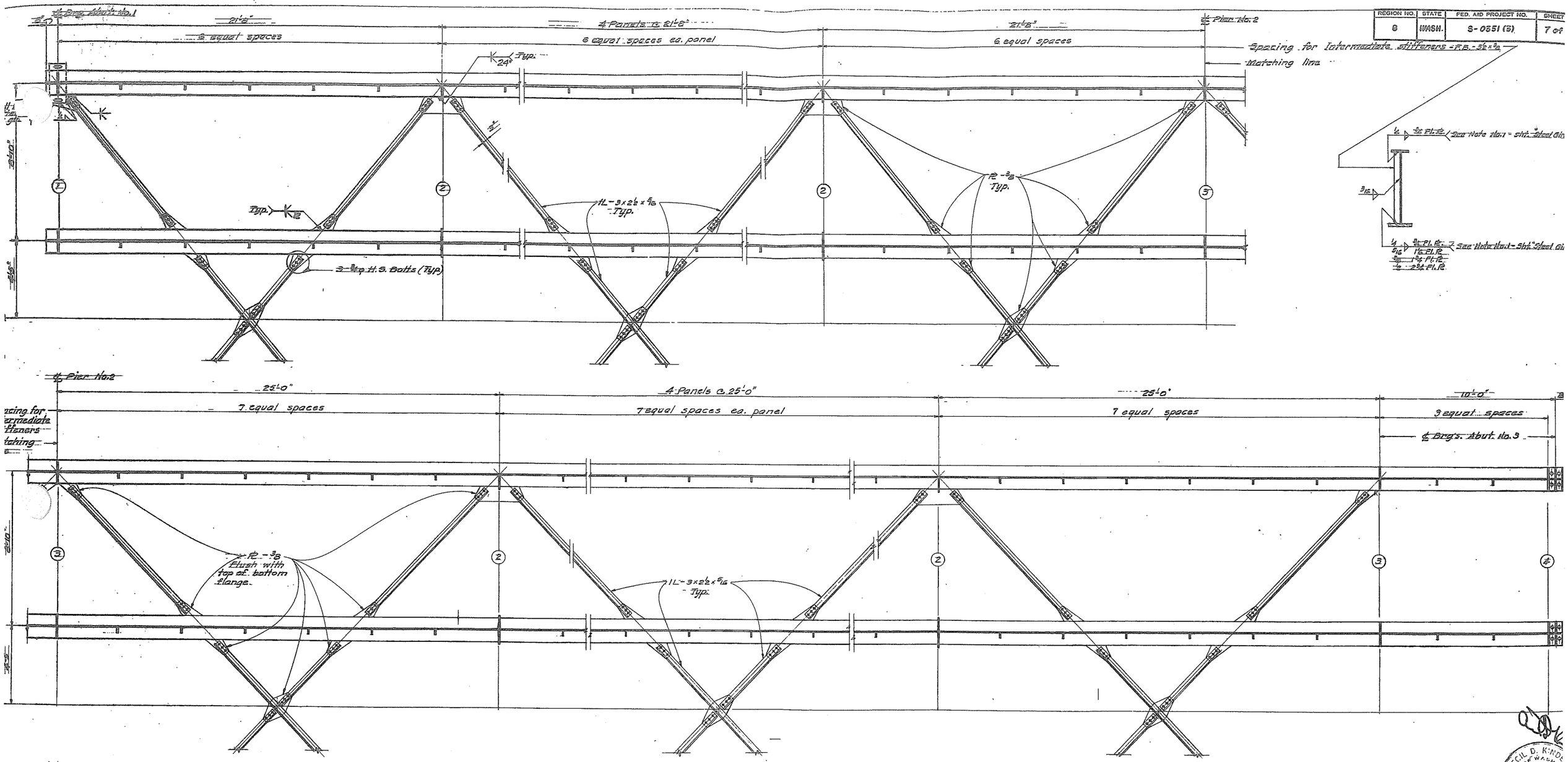

LATERAL BRACING

F.A.S.-S-0351 (3)
DAYBREAK BRIDGE
OVER
EAST FORK OF LEWIS RIVER
CLARK COUNTY, WASH.

LATERAL BRACING

HARRY R. POWELL & ASSOCIATE
CONSULTING ENGINEERS
SMITH TOWER SEATTLE, WAS

DESIGNED BY: J. KING | CHECKED BY: DRLL
DRAWN BY: A.M.N. | DATE: MAY 31, 1966
SHEET NO. 70

REGION NO.	STATE	FED. AID PROJECT NO.	SHEET NO.
8	WASH.	S-0351 (3)	9 of 10

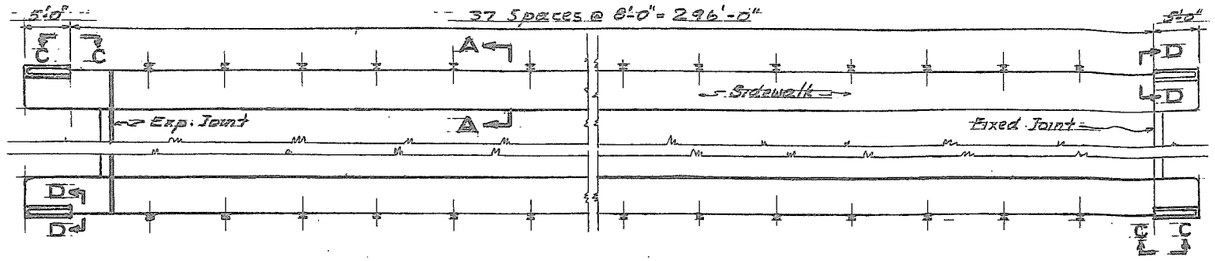

PLAN

See "Stab" plan for Details

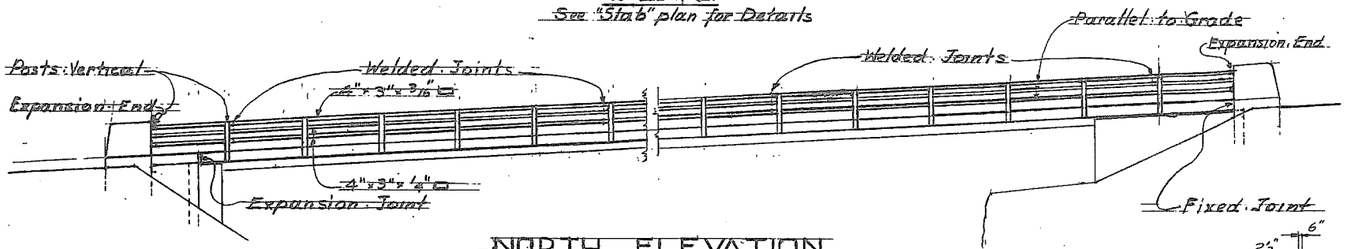

NORTH ELEVATION

South Elevation is similar, but opp. Hand

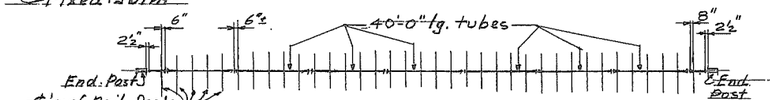

Diagram of tube splice locations.

NOTES ON RAILING

All material to be High-strength Low-alloy Structural Steel A.S.T.M.-A441 unless noted.

Bolt heads may be square, but nuts shall be hexagonal.

All corners and edges shall be ground smooth and sanded to a radius of 1/32" or as shown on the plans.

Anchor bolts, misc. bolts, hex. nuts, cut washers, shims, rails, posts & fillers shall be galvanized after fabrication in accordance with A.S.T.M. Specification A-123.

Shop drawings of the railing shall be submitted for approval, showing complete dimensions and details of fabrication and including an erection diagram. Materials being used shall be specified on the shop drawings.

All rail elements and posts shall be given three coats of paint as called for in the Standard Specifications except that surfaces to be in contact after erection shall receive one shop coat. Paint expansion sleeves with 2 field coats before erection. Joint must be free to move after painting.

Erection: Rail posts shall be set vertical; rail tubes shall be set parallel to grade of roadway. To obtain proper alignment anchor bolt assemblies must be held in exact position while pouring curb. Use shims as required on plans.

MATERIAL SPECIFICATIONS

PART	A.S.T.M. DESIGNATION	NOTES
Anch. & Misc. Bolts	High Tensile Strength A.S.T.M.-A-325	Galvanize
Rail Posts	A.S.T.M.-A 441	Galvanize
Struct. Tubes	A.S.T.M.-A 441	Galvanize
Plates, Shims	A.S.T.M.-A 441	Galvanize
Hex. Nuts & Washers	A.S.T.M. A-325	Galvanize

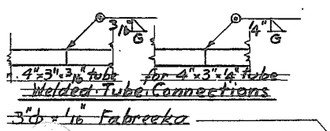

Welded Tube Connections

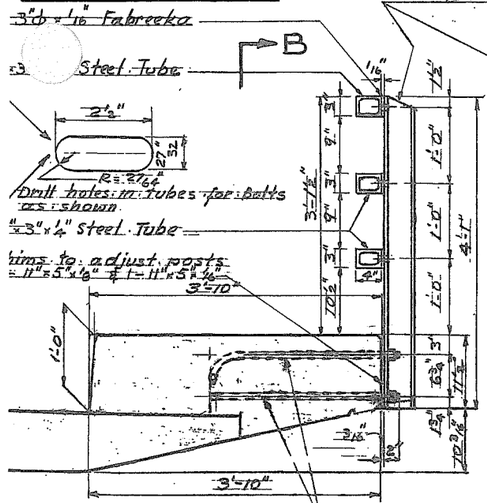

A—A

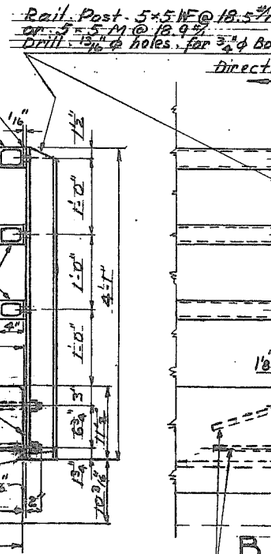

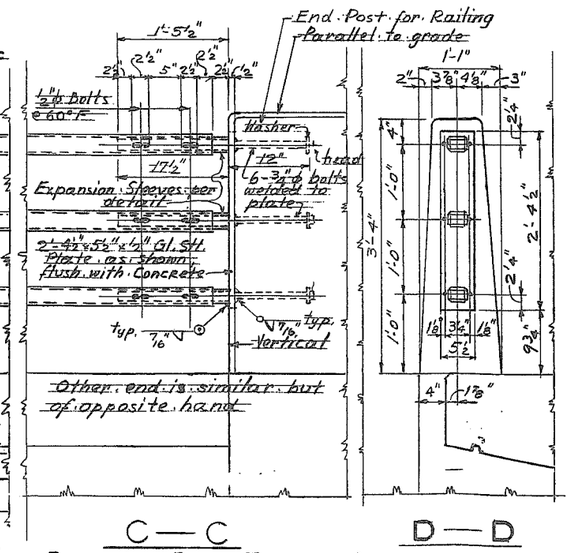

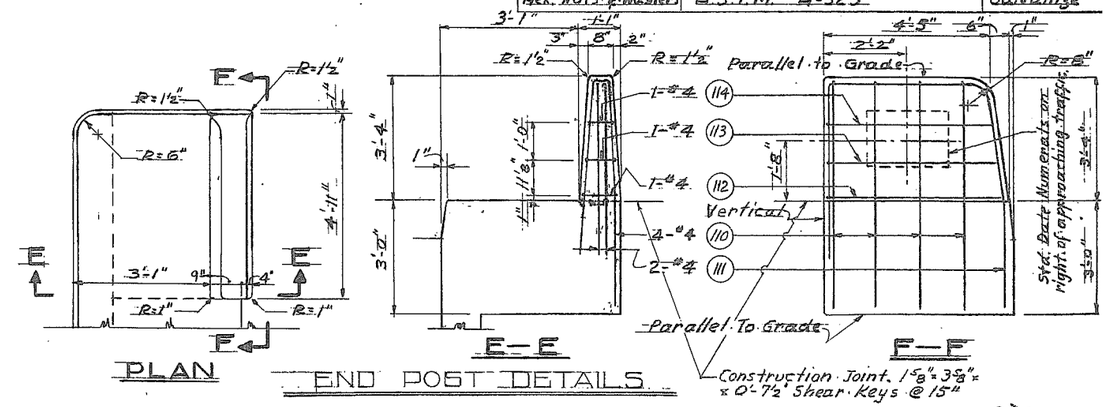

END POST DETAILS

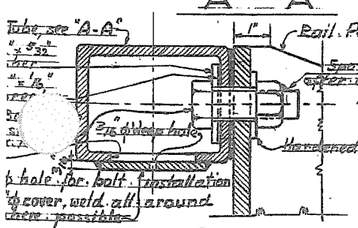

TAIL OF TUBE CONNECTION

Sets Req'd.

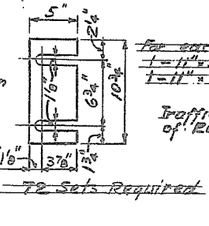

72 Sets Required

SHIM DETAIL

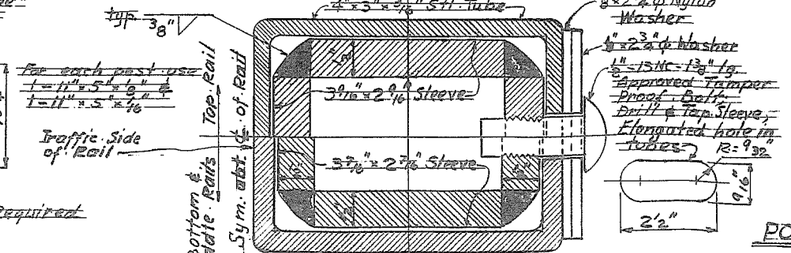

DETAIL OF EXPANSION SLEEVE

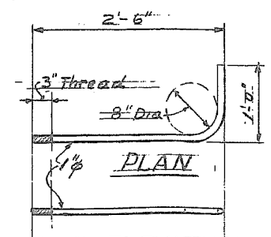

SIDE ELEVATION

POST ANCHOR BOLT DETAIL

288 Bolts Required

F.A.S. S-0351(3)
DAYBREAK BRIDGE
OVER
EAST FORK OF LEWIS RIVER
CLARK COUNTY, WASH.

RAILING

HARRY R. POWELL & ASSOCIATES
CONSULTING ENGINEERS
SMITH TOWER
SEATTLE, WASH.

DESIGNED BY: L.W.C. | CHECKED BY: D.P.M.
DRAWN BY: J.M.P. | DATE: MAY 31, 1966 | SHEET NO. 9 OF 10

REGION NO.	STATE	FED. AID PROJECT NO.	SHEET NO.
0	WASH.	S-0351 (3)	10 of 10

BAR LIST

Reinforcing bars shall conform to A.S.T.M. specifications, A-305-56T

All dimensions are out to out

LOCATION			NO.	SIZE	LENGTH	BENDING DIAGRAM
Abut. 1	Footg.	Long way	2	8	31'-8"	Str.
"	"	Short way	92	6	5'-6"	Str.
"	Wg. Seat	Ties	32	4	10'-8"	
"	"	Sides	2	5	31'-8"	Str.
"	"	Top	4	8	33'-10"	
"	Backwall	Vert.	31	5	13'-9"	
"	"	Horiz.	12	4	34'-9"	
"	"	Top	2	6	33'-6"	Str.
"	Curtain Walls	Vert.	4	8	13'-8½"	
"	"	"	4	5	6'-7"	
"	Wing walls	Vert.	4	9	12'-4"	
"	"	Horiz.	2	5	8'-7"	Str.
"	"	"	28	5	Varies	Str. 4ea. 4'-10", 5'-10", 6'-10", 8'-0", 9'-1", 10'-9", 11'-2"
"	"	Vert. Ins. face	6	8	13'-9"	
"	"	" Out. face	6	5	10'-3"	
"	"	" Ins. face	10	5	Varies	
"	"	" Out. face	10	5	Varies	Str.
"	"	" Ins. face	6	5	Varies	
"	"	" Out. face	6	5	Varies	Str. 2ea. 3'-0", 3'-9", 4'-6", 5'-2", 5'-10"
"	Sidewalk	Top	4	5	8'-8"	Str. 2ea. 6'-5", 6'-10", 7'-5"
"	Pavt. Seat	Ties	26	4	2'-3"	
"	"	Horiz.	1	4	29'-8"	Str. 2ea. 3'-0", 3'-9", 4'-6", 5'-2", 5'-10"
"	End Post Support	Horiz.	2	5	4'-2"	Str. 2ea. 6'-5", 6'-10", 7'-2"
Pier 2	Footg.	Long way	9	8	32'-6"	Str.
"	"	Short way	44	8	6'-6"	Str.
"	Wall	Vert.	42	8	29'-9"	Str.
"	"	Horiz.	36	6	28'-6"	Str.
"	"	"	36	6	6'-4"	
Pier	Footg.	Longit. top	8	18	40'-6"	Str.
"	"	"	8	18	38'-0"	Str.
"	"	"	8	18	29'-0"	Str.
"	"	"	8	18	22'-0"	Str.
"	"	Longit. bot.	16	8	11'-0"	Str.
"	"	Transv. top	21	5	31'-6"	Str.
"	"	" bot.	7	5	30'-4"	Str.
"	Brg. Seat	Top	7	8	33'-10"	
"	"	Sides	2	5	31'-8"	Str.
"	"	Ties	30	4	11'-4"	
"	"	"	30	4	8'-7"	
"	Back wall	Vert.	30	5	16'-1"	
"	"	Horiz.	10	4	31'-9"	Str.
"	"	"	4	4	18'-11"	Str.
"	"	Top	2	6	18'-11"	Str.
"	Curtain Walls	Vert.	32	5	17'-7"	
"	"	"	12	5	16'-10"	
"	"	"	12	5	10'-5"	
"	"	Horiz.	36	5	20'-9"	Str.
"	"	"	4	5	13'-0"	Str.
"	End Post Support	Vert.	10	5	4'-2"	Str.
Rdwy. Slab		Transv. bot.	324	6	37'-4"	
"		" top	324	6	36'-0"	
"		Longit. top & bot.	924	5	26'-2"	Str.
"		Curb transv.	584	5	6'-6"	
"		" longit.	6	5	7'-5"	Str.
"		" "	8	5	11'-8"	Str.
"		" "	132	5	15'-8"	Str.
Abut.	End Post	Vert.	16	4	10'-5½"	
"	"	"	8	4	14'-8"	
"	"	Horiz.	4	4	10'-4⅞"	
"	"	"	4	4	3'-9⅞"	
"	"	"	4	4	9'-3⅞"	

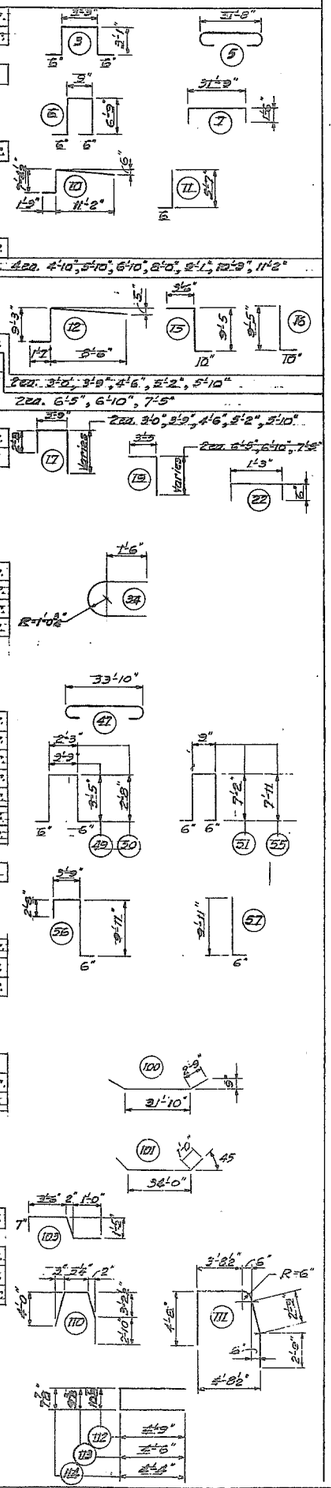

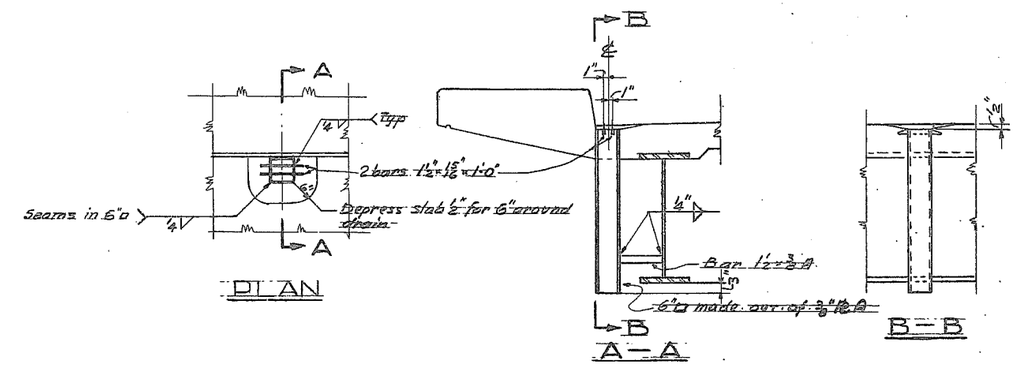

BRIDGE DRAIN DETAILS

8 Drains required

For location of Drains see Sht. #9 of 11

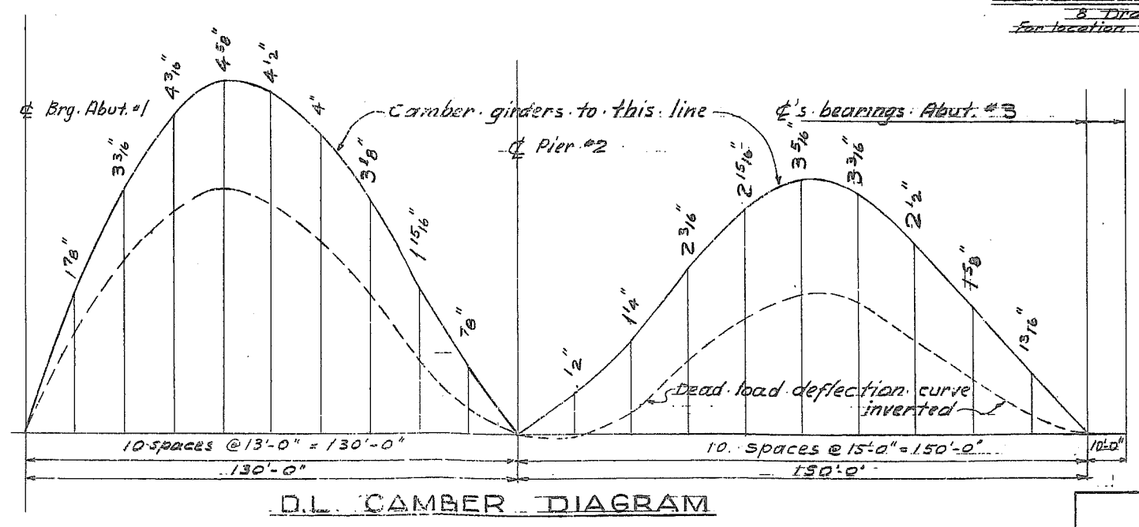

D.L. CAMBER DIAGRAM

CECIL D. KINDER
STATE OF WASHINGTON
149
REGISTERED
CIVIL ENGINEER & LAND SURVEYOR

F.A.S.-S-0351(3)

DAYBREAK BRIDGE

OVER

EAST FORK OF LEWIS RIVER

CLARK COUNTY, WASH.

BAR LIST

JIM D. KING
STATE OF WASHINGTON
REGISTERED
PROFESSIONAL ENGINEER

HARRY R. POWELL & ASSOCIATES

CONSULTING ENGINEERS

SMITH TOWER SEATTLE, WASH.

DESIGNED BY: J. King	CHECKED BY: [illegible]	SHEET NO. 10 of 10
DRAWN BY: [illegible]	DATE: May 31, 1966	