APPENDIX C

Low Impact Development Details

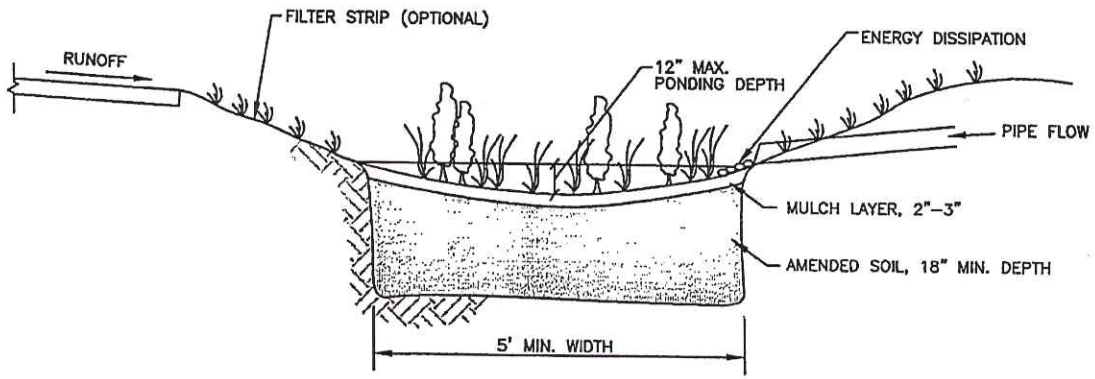

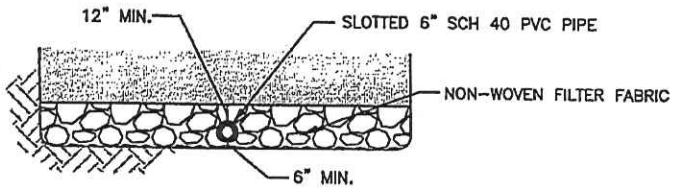

OPTIONAL UNDER DRAIN FOR POORLY DRAINED SOILS, SEE NOTE 3

NOTES:

1. SIDE SLOPE WITHIN BIORETENTION AREA SHALL BE NO STEEPER THAN 3 HORIZONTAL TO 1 VERTICAL.
2. PROVIDE OVERFLOW FOR PONDING EXCEEDING 6 INCHES.
3. UNDER DRAIN MAY BE REQUIRED. SEE LID MANUAL FOR UNDER DRAIN CRITERIA.
4. SEE LID MANUAL FOR PLANTING REQUIREMENTS.

ADAPTED FROM PSAT

DRAFT RAIN GARDEN

NOT FOR CONSTRUCTION

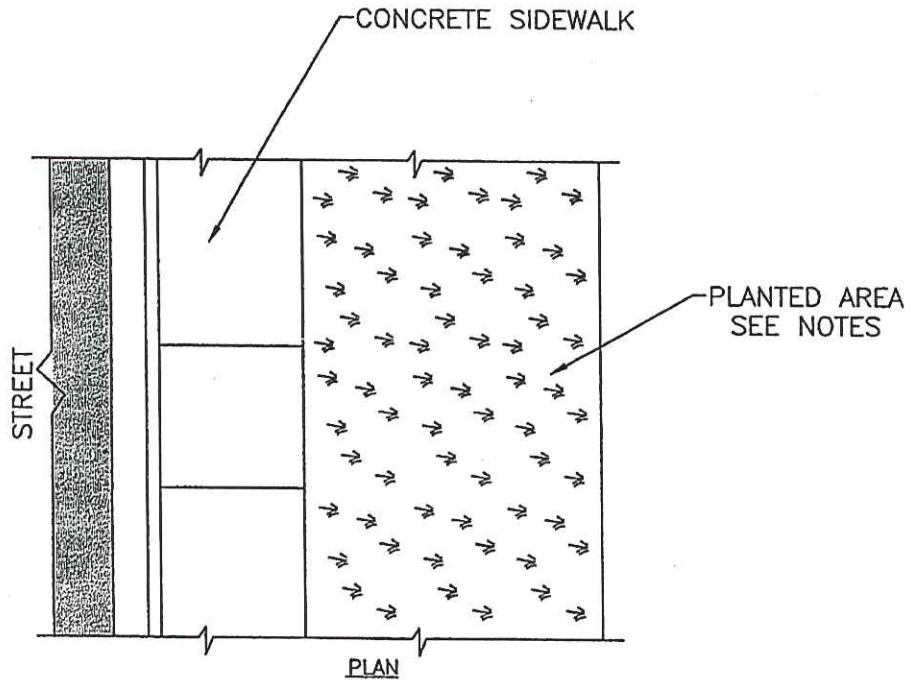

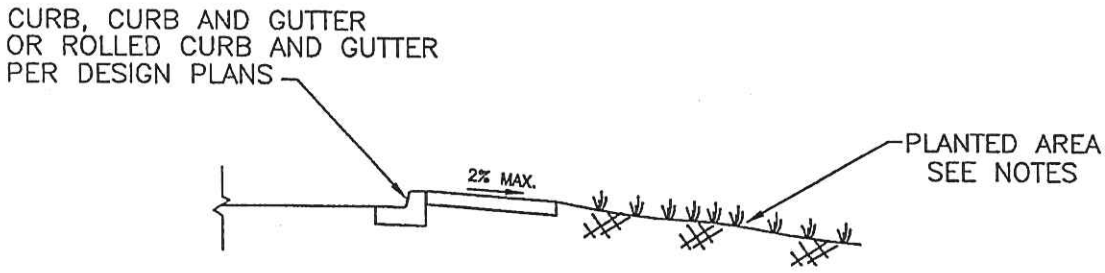

SECTION

NOTES

UNDISTURBED NATIVE SOIL WITH WELL ESTABLISHED NATIVE VEGETATION, OR ADDITONAL LID BMP FACILITY, OR PLANTED SOIL AMMENDMENTS. SOIL AMENDMENTS NECESSARY IF ONSITE SOILS ARE POORLY DRAINED OR IF NATIVE SOILS ARE DISTURBED IN A MANNER THAT REDUCES INFILTRATION RATES.

IF PLANTING AMENDED SOILS THE FOLLOWING SEED MIX SHALL BE USED:
40% TURF-TYPE RYE
40% FESCUE
10% WHITE DUTCH CLOVER
10% COLONIAL BENTGRASS

ADAPTED FROM PSAT

DRAFT REVERSE SLOPED SIDEWALKS

NOT FOR CONSTRUCTION

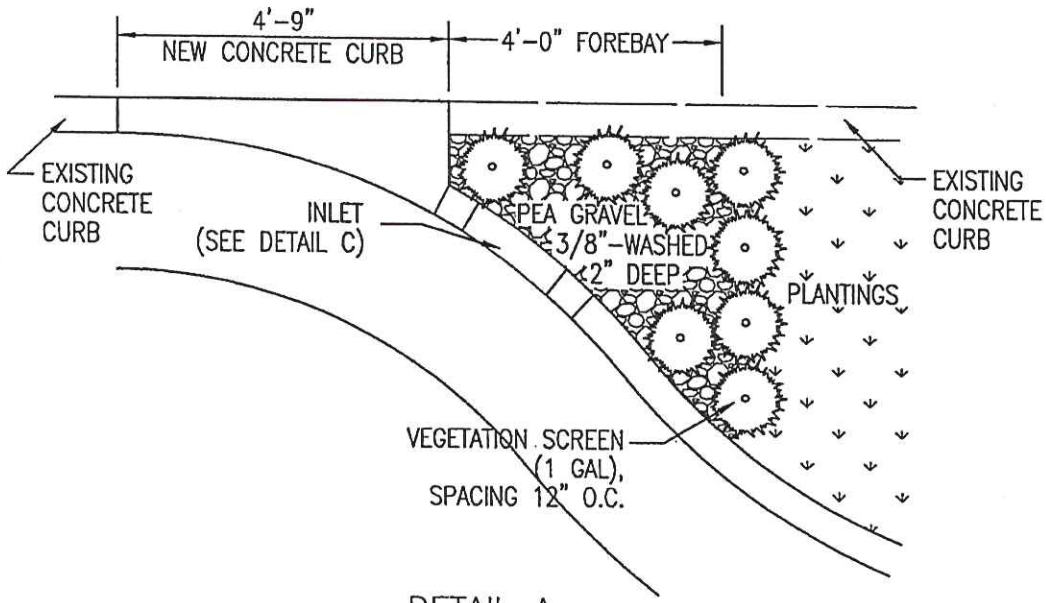

DETAIL A
PEA GRAVEL FOREBAY

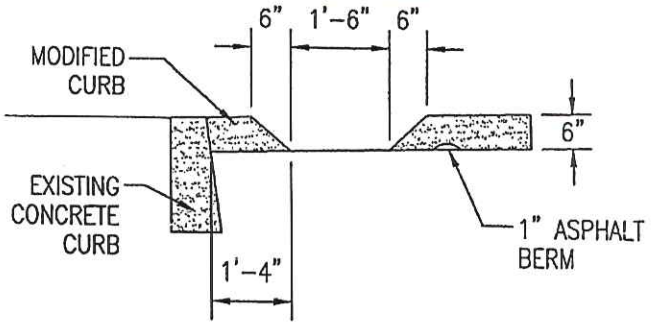

DETAIL C
MODIFIED INLET

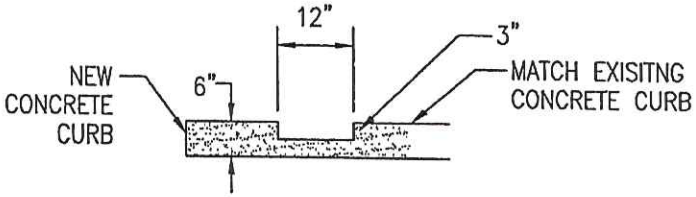

DETAIL D
MODIFIED OUTLET

NOTES:

1. DETAIL A: PEA GRAVEL FOREBAY FOR USE WITH STORMWATER CURB EXTENSIONS ONLY. PEA GRAVEL FOREBAY REPLACES STANDARD CONCRETE SPLASH PAD.

2. DETAIL C: TO PREVENT PONDING, POSITION INLET CLOSER TO EXISTING CURB IF THE STREET CROSS-SLOPE IS >2%. ADDITIONAL INLETS CAN BE ADDED IF NECESSARY (PREFERABLY IMMEDIATELY DOWNSTREAM OF EACH CHECK DAM TO MINIMIZE POTENTIAL BACKFLOW). ADDITIONAL INLETS ARE NOT RECOMMENDED FOR STREETS SLOPED <1%.

3. DETAILS B, C & D: FOR USE ON LOCAL ACCESS AND RESIDENTIAL ROAD CLASSIFICATIONS ONLY.

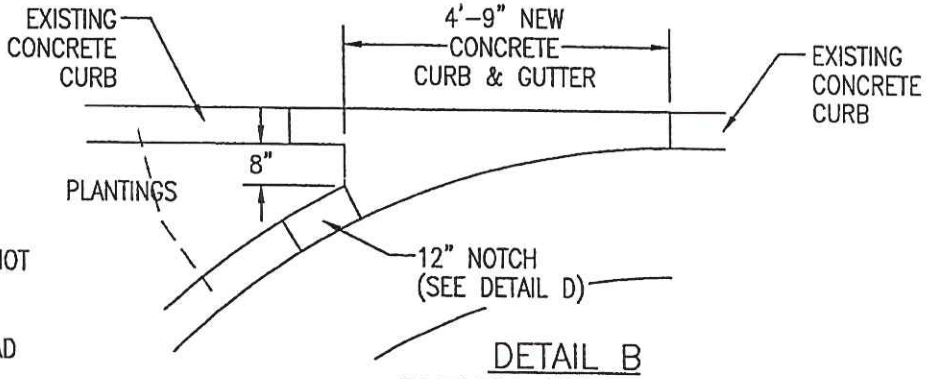

DETAIL B
OUTLET CURB PLAN

ADAPTED FROM CITY OF PORTLAND

DRAFT CURB EXTENSION INLET/OUTLET

NOT FOR CONSTRUCTION