CAPITAL IMPROVEMENTS PROGRAM

COUNTY ROAD PROJECT # 321222

# BETTS BRIDGE #26 REPLACEMENT (SALMON CREEK AVE.)

PLANS FOR THE CONSTRUCTION OF

ROADWAY, RETAINING WALLS, AND STORM DRAINAGE

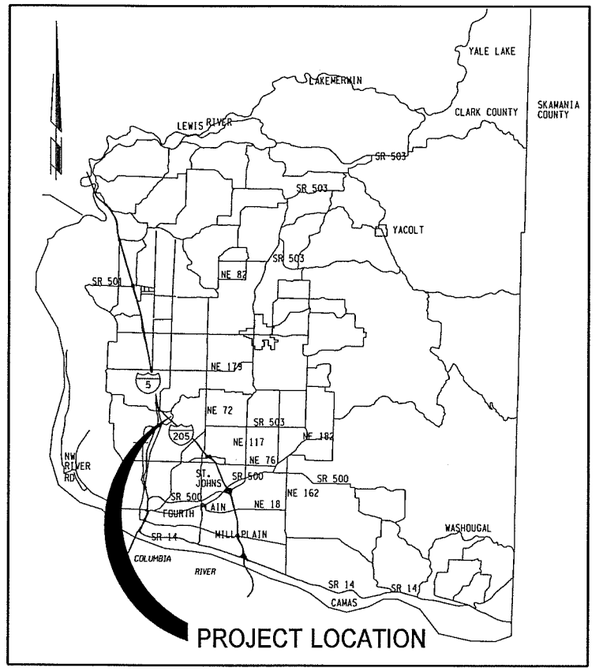


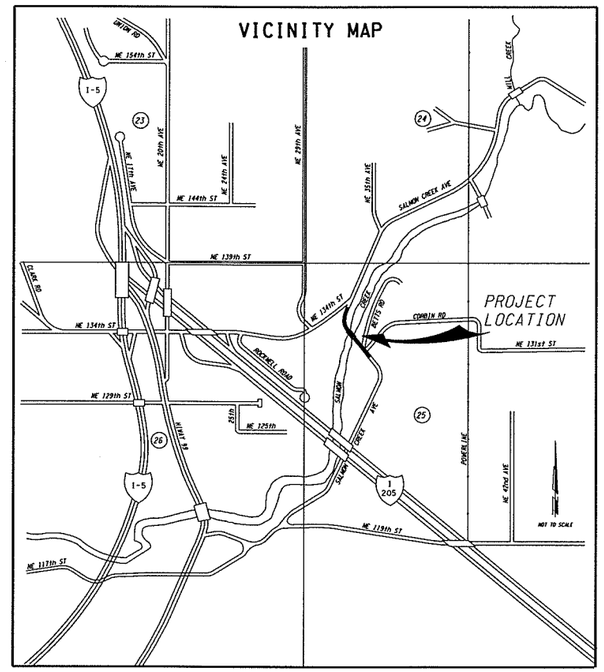


## INDEX OF SHEETS


| | | |
|---|---|---|
| 1 | CV | COVER SHEET |
| 2 | SQ | SUMMARY OF QUANTITIES AND LEGEND |
| 3 | TS1 | TYPICAL SECTIONS |
| 4 | TS2 | TYPICAL SECTIONS |
| 5 | TS3 | TYPICAL SECTIONS |
| 6 | TS4 | TYPICAL SECTIONS |
| 7 | HV1 | HORIZONTAL AND VERTICAL CONTROL |
| 8 | EC1 | EROSION CONTROL PLANS (BOP TO 60+70) |
| 9 | EC2 | EROSION CONTROL PLANS (60+70 TO 66+20) |
| 10 | EC3 | EROSION CONTROL DETAILS - SHEET 1 |
| 11 | EC4 | EROSION CONTROL DETAILS - SHEET 2 |
| 12 | RD1 | ROADWAY DETAILS |
| 13 | RD2 | RAMP DETAILS |
| 14 | RD3 | CURB & SIDEWALK DETAILS |
| 15 | RD4 | APPROACH PROFILES |
| 16 | WP1 | WALL PROFILE |
| 17 | WP2 | WALL PROFILE |
| 18 | WP3 | WALL PROFILE |
| 19 | WP4 | WALL PROFILE |
| 20 | WP5 | WALL PROFILE |
| 21 | PP1 | PLAN & PROFILE SALMON CREEK AVENUE (BOP TO 58+40) |
| 22 | PP2 | PLAN & PROFILE SALMON CREEK AVENUE (58+40 TO 62+40) |
| 23 | PP3 | PLAN & PROFILE SALMON CREEK AVENUE (62+40 TO EOP) |
| 24 | PP4 | PLAN & PROFILE CORBIN ROAD (STA 10+00 TO 10+60) |
| 25 | PP5 | PLAN & PROFILE BETTS ROAD (STA 10+00 TO 10+95) |
| 26 | WQ1 | STORMWATER PLAN & PROFILE (BOP TO 59+20) |
| 27 | WQ2 | STORMWATER PLAN & PROFILE (60+90 TO 65+25) |
| 28 | WQ3 | STORMWATER MANAGEMENT FACILITIES |
| 29 | WQ4 | STORMWATER DETAILS - SHEET 1 |
| 30 | WQ5 | STORMWATER DETAILS - SHEET 2 |
| 31 | EN1 | BANK RESTORATION & STABILIZATION |
| 32 | EN2 | BANK RESTORATION DETAILS |
| 33 | INT1 | INTERSECTION PLAN CORBIN ROAD |
| 34 | INT2 | INTERSECTION PLAN BETTS ROAD |
| 35 | 1 | PRELIMINARY LAYOUT |
| 36 | 2 | TYPICAL SECTION |


## COMMISSIONERS:

CRAIG PRIDEMORE, Chair

BETTY SUE MORRIS, Commissioner

JUDIE STANTON, Commissioner

proud past, promising future

CLARK COUNTY WASHINGTON

DEPARTMENT OF PUBLIC WORKS

DESIGN AND ENGINEERING DIVISION- DESIGN SECTION

# 50% PLANS

# PRELIMINARY

| Quality Assurance | Project Manager | Public Works Director/County Engineer |
|---|---|---|
| | | |
| DATE: | Carolyn Henriges, P.E., P.L.S. DATE: | Peter Capell, P.E. DATE: |

proud past, promising future

CLARK COUNTY WASHINGTON

Recommended for Approval

Grading _____ Erosion _____

Storm Water Plan _____

Development Review Manager _____ Date _____

PLOT1

## PRELIMINARY SUMMARY OF QUANTITIES

| ITEM NO | BID ITEM IDENT NO | QUANTITY | BID ITEM DESCRIPTION | UNIT |
|---|---|---|---|---|
| 1 | 109.07 | 1 | MOBILIZATION | L.S. |
| 2 | 109.10 | 1 | MINOR CHANGE | CALC |
| 4 | 110.30 | 1 | TEMPORARY TRAFFIC CONTROL DEVICES | L.S. |
| 5 | 110.40 | 50 | CONSTRUCTION SIGNS CLASS "A" | S.F. |
| 6 | 201.00 | 1 | CLEARING AND GRUBBING | L.S. |
| 7 | 201.20 | 1 | ROADSIDE CLEANUP | EST |
| 8 | | 1 | SITE DEMOLITION | L.S. |
| 9 | 202.50 | 1 | REMOVAL OF STRUCTURE - BRIDGE 26 | L.S. |
| 10 | 202.51 | 1 | REMOVING OBSTRUCTIONS - FORCE ACCOUNT | EST |
| 11 | 203.10 | 1050 | ROADWAY EXCAVATION (INCL HAUL) | C.Y. |
| 12 | 203.20 | 1622 | EMBANKMENT COMPACTION | C.Y. |
| 13 | 203.30 | 1910 | GRAVEL BORROW (INCL HAUL) | C.Y. |
| 14 | 203.50 | 210 | SAWCUT EXISTING (ASPHALT) PAVEMENT | L.F. |
| 15 | 207.00 | 96 | WATER | MGAL |
| 16 | | 2 | GRAVEL CONSTRUCTION ENTRANCE | EACH |
| 17 | | 1500 | GENERAL EXCAVATION AND FILL | C.Y. |
| 18 | | 200 | SOIL AMENDMENT | C.Y. |
| 19 | | 30000 | FINE GRADING | S.F. |
| 20 | 404.50 | 2523 | CRUSHED SURFACING BASE COURSE | TON |
| 21 | 504.02 | 814 | ASPHALT CONCRETE PAVEMENT CLASS A | TON |
| 22 | 504.03 | 750 | ASPHALT CONCRETE PAVEMENT CLASS E | TON |
| 23 | 504.14 | 234 | PLANING BITUMINOUS PAVEMENT | S.Y. |
| 24 | 504.23 | 29 | ASPHALT CONCRETE APPROACH CL A | TON |
| 25 | 505.00 | 62 | CEMENT CONCRETE APPROACH, 3 DAY | S.Y. |
| 26 | | 1 | NEW BRIDGE STRUCTURE | L.S. |
| 27 | 612.50 | 3430 | CONCRETE RETAINING WALL W/ RAILING | S.F. |
| 28 | | 240 | 10" STORM PIPE | L.F. |
| 29 | | 165 | 12" STORM PIPE | L.F. |
| 30 | | 285 | 15" STORM PIPE | L.F. |
| 31 | | 515 | 18" STORM PIPE | L.F. |
| 32 | | 13 | MANHOLE | EACH |
| 33 | | 14 | COMBINED CURB INLETS | EACH |
| 34 | | 3 | ELWOOD STRUCTURES | EACH |
| | | 5 | DITCH INLET | EACH |
| | | 1 | FLOW SPLITTER (BLOSWALE) | EACH |
| 35 | | 5 | STORM GRATE INLET | EACH |
| 36 | | 1 | EROSION CONTROL | L.S. |
| 37 | | 60 | INLET PROTECTION - BIO-BAGS | EACH |
| 38 | | 14 | INLET PROTECTION - SILT SACKS | EACH |
| 39 | | 0 | INLET PROTECTION - GRAVEL PROTECTION | EACH |
| 41 | | 2000 | SEDIMENT FENCE, UNSUPPORTED | L.F. |
| 42 | | 500 | CONSTRUCTION FENCE | L.F. |
| 43 | | 75 | EROSION CONTROL STRAW WATTLES | EACH |
| 44 | | 6500 | EROSION CONTROL MATTING, HEAVY DUTY COIR FABRIC | S.F. |
| 45 | | 2000 | EROSION CONTROL MATTING, LIGHT DUTY COIR FABRIC | S.F. |
| 46 | | 2 | TEMPORARY MULCHING | ACRE |
| 47 | | 1 | TEMPORARY SEDIMENT POND | EACH |
| 48 | | 0 | SEDIMENT TRAP | EACH |
| 49 | | 0 | SEDIMENT BASIN | EACH |
| 50 | | 500 | PLASTIC SHEETING | S.F. |
| 51 | | 1 | STORMWATER PONDS | L.S. |
| 52 | | 1 | BANK PROTECTION UNDER BRIDGE | L.S. |
| 53 | | 1 | MITIGATION AREAS | L.S. |
| 54 | 804.00 | 96 | CEMENT CONC. BARRIER CURB | L.F. |
| 55 | 804.01 | 1682 | CEMENT CONC. BARRIER CURB AND GUTTER | L.F. |
| 56 | 810.20 | 360 | REMOVING BEAM GUARDRAIL | L.F. |
| 57 | 811.22 | 8 | REMOVING BEAM GUARDRAIL ANCHOR | EACH |

### LEGEND

- NEW DITCH CENTERLINE
- NEW GUARDRAIL
- NEW RETAINING WALL
- ROW LINE
- NEW EDGE OF PAVEMENT
- NEW CURB LINE (FACE AND BACK)
- NEW CENTER LINE
- NEW FENCE LINE
- NEW STORM DRAIN OR CULVERT
- NEW FILL LIMITS
- NEW CUT LIMITS
- SAWCUT LINE
- PERMANENT SLOPE EASEMENT
- NEW SILT FENCE
- EXISTING RETAINING WALL
- EXISTING EDGE OF PAVEMENT
- EXISTING CENTER LINE
- EXISTING FENCE LINE
- EXISTING TELEPHONE LINE
- EXISTING WATER LINE
- EXISTING UNDERGROUND ELECTRIC
- EXISTING SANITARY SEWER LINE
- EXISTING STORM DRAINAGE
- EXISTING GAS LINE
- EXISTING OVERHEAD POWER
- EXISTING CULVERT
- EXISTING DITCH CENTER LINE
- EXISTING GUARDRAIL
- EXISTING LANDSCAPING

### SYMBOLS

- NEW DITCH INLET
- NEW CATCH BASIN
- NEW MANHOLE
- NEW CURB INLET
- NEW COMBINATION CURB INLET
- NEW MAILBOX
- CURVE TABLE
- WATTLE
- EXISTING WELL
- EXISTING BRUSH LINE
- EXISTING HEDGE
- EXISTING SHRUB
- EXISTING CONIFEROUS TREE
- EXISTING DECIDUOUS TREE
- EXISTING MAILBOX
- EXISTING TRANSFORMER
- EXISTING ELECTRIC TOWER
- EXISTING SANITARY MANHOLE
- EXISTING FIRE HYDRANT
- EXISTING CLEANOUT
- EXISTING GAS VALVE
- EXISTING CONIFEROUS TREE TO BE REMOVED
- EXISTING DECIDUOUS TREE TO BE REMOVED
- EXISTING WATER METER
- EXISTING WATER VALVE
- EXISTING TELEPHONE VAULT
- EXISTING TELEVISION BOX
- EXISTING TELEPHONE MANHOLE
- EXISTING TELEPHONE POLE
- EXISTING GUY ANCHOR
- EXISTING POWER POLE
- EXISTING TELEPHONE PEDESTAL
- EXISTING SERVICE POLE
- EXISTING CURB INLET
- EXISTING CATCH BASIN
- EXISTING STORM MANHOLE
- EXISTING MISC MANHOLE
- EXISTING SIGN
- EXISTING SIGNAL POLE
- EXISTING J BOX
- EXISTING LUMINAIRE
- EXISTING SPRINKLER HEAD
- TRAVERSE POINT
- TEST HOLE
- CURB RAMP
- R/W TAKE

50% PLANS
PRELIMINARY

| | |
|---|---|
| DESIGNED | PW |
| DRAWN | PW |
| CRP | 321222 |
| HOR. | N/A |
| VERT. | N/A |
| DATE | 11/03 |
| DWG: | S01 |
| SHEET | 2 OF 26 |

CALL 48 HOURS BEFORE YOU DIG
1-800-553-4344
"It's the Law"
NORTHWEST UTILITIES NOTIFICATION CENTER

DESIGN & ENGINEERING DIVISION
DESIGN SECTION

BETTS BRIDGE #26 REPLACEMENT (SALMON CREEK AVE.)
SUMMARY OF QUANTITIES AND LEGEND

proud past, promising future
CLARK COUNTY WASHINGTON

PLOT2

SALMON CREEK AVE. STA 55+70.00 TO 56+00.00

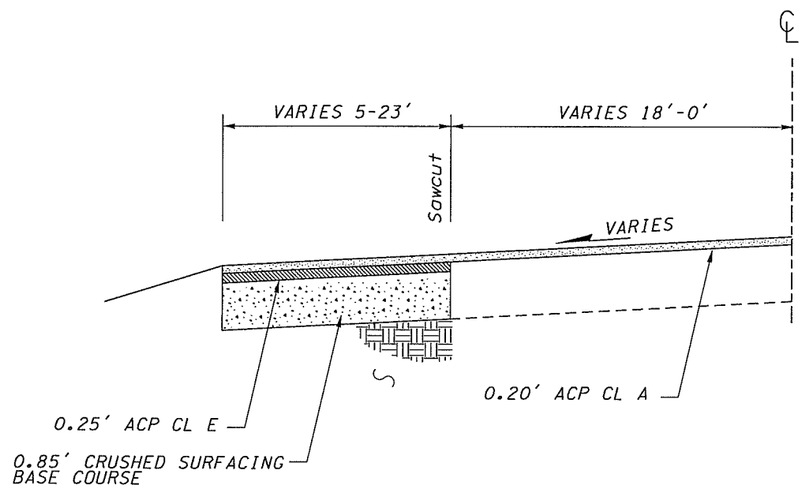


SALMON CREEK AVE. STA 54+20.00 TO 54+34.29

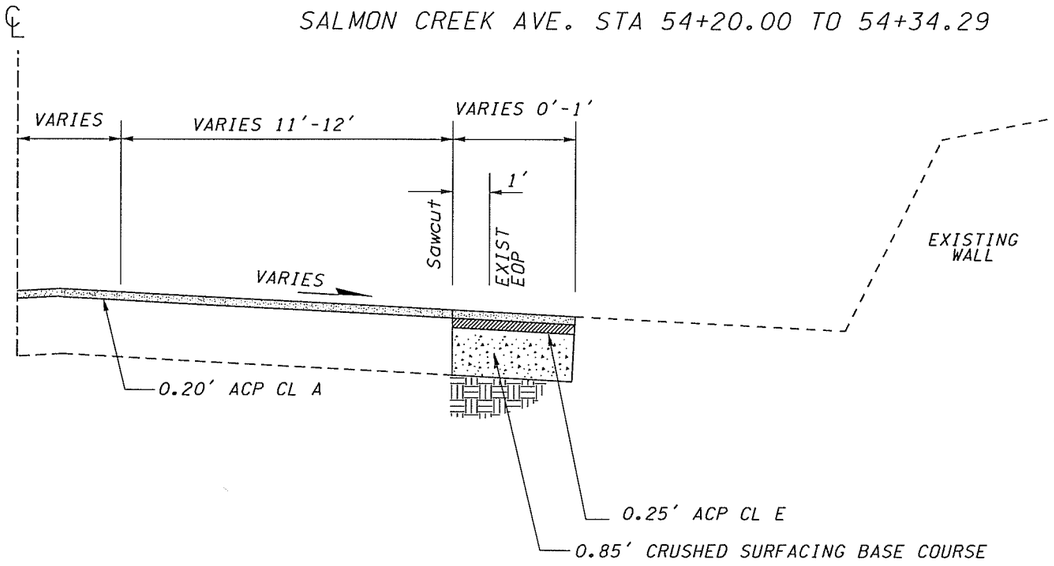


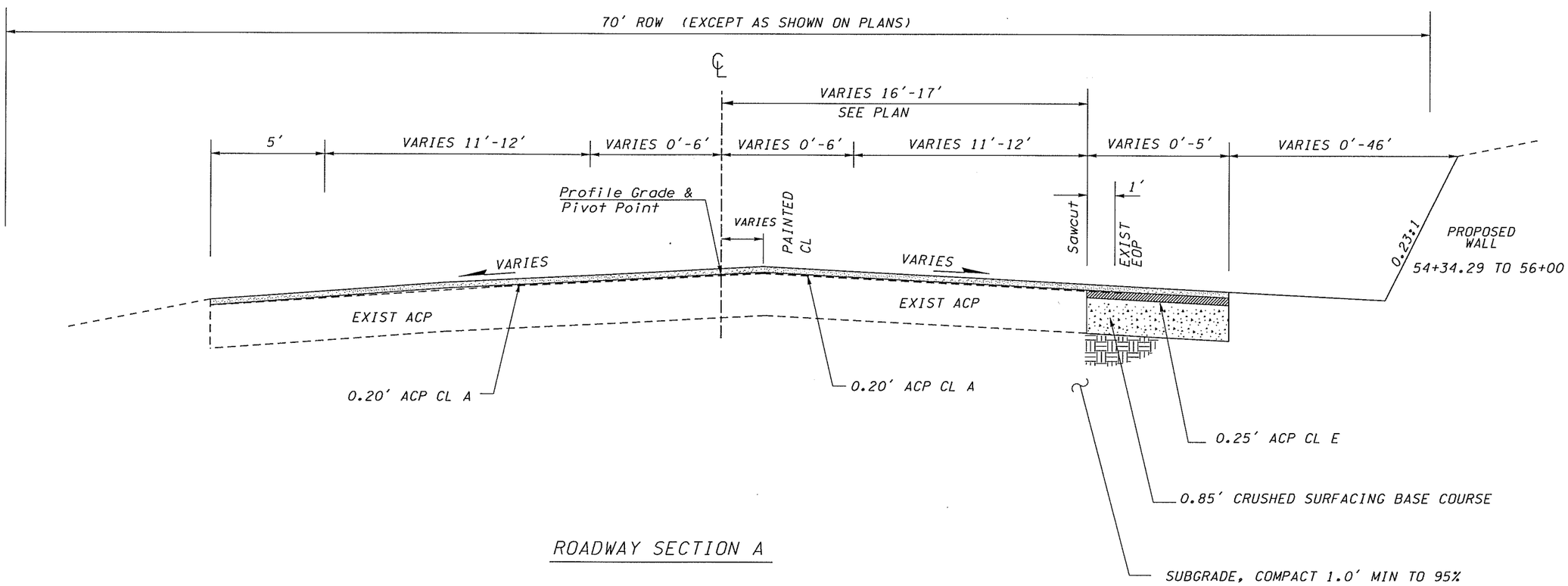


ROADWAY SECTION A

SALMON CREEK AVE. STA 54+20.00 TO 56+00.00

50% PLANS
PRELIMINARY

| | |
|---|---|
| DESIGNED | PW |
| DRAWN | PW |
| CRP | 321222 |
| HOR. | N/A |
| VERT. | N/A |
| DATE | 11/03 |
| DWG: | TS1 |
| SHEET | 3 OF 20 |

CALL 48 HOURS BEFORE YOU DIG
1-800-553-4344
"It's the Law"
NORTHWEST UTILITIES NOTIFICATION CENTER

DESIGN & ENGINEERING DIVISION
DESIGN SECTION

BETTS BRIDGE #26 REPLACEMENT (SALMON CREEK AVE.)
TYPICAL SECTIONS

proud past, promising future
CLARK COUNTY WASHINGTON

PLOT3

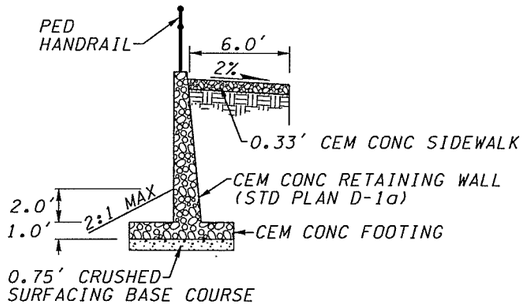


SALMON CREEK AVE. STA 56+00.00 TO 57+04.00
SALMON CREEK AVE. STA 57+45.00 TO 58+66.25
SALMON CREEK AVE. STA 60+12.55 TO 60+44.90

NOTE: HEIGHT VARIES, SEE WALL PROFILES

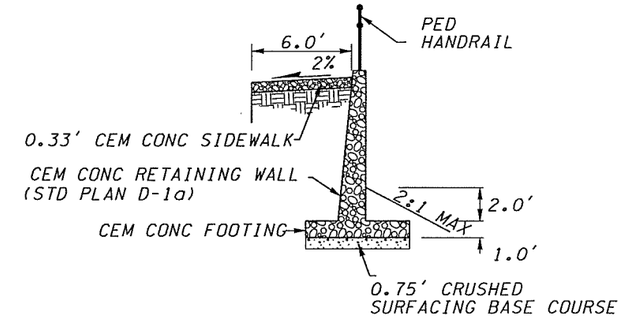


BETTS ROAD STA 10+92.6 TO 58+87.90
SALMON CREEK AVE. STA 60+35.50 TO 61+80.00

NOTE: HEIGHT VARIES, SEE WALL PROFILES

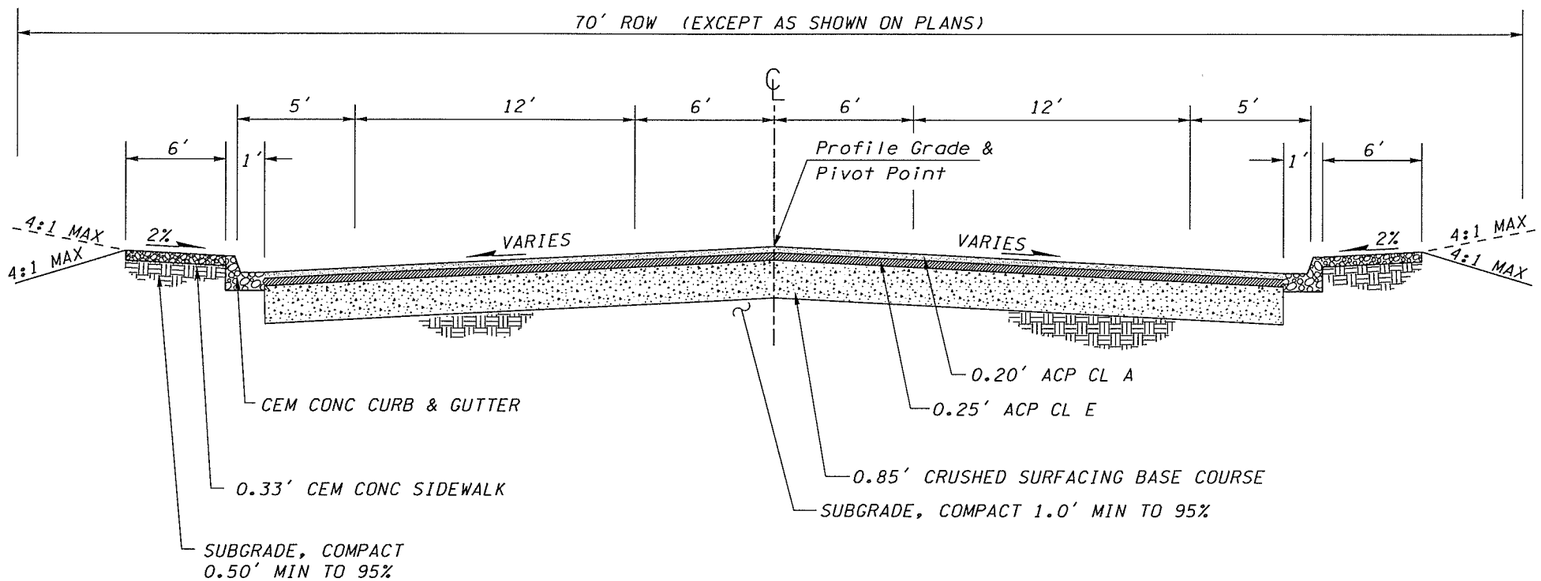


ROADWAY SECTION B

SALMON CREEK AVE. STA 56+00.00 TO 58+85.00
SALMON CREEK AVE. STA 60+15.00 TO 63+40.00

50% PLANS
PRELIMINARY

DESIGN & ENGINEERING DIVISION
DESIGN SECTION

BETTS BRIDGE #26 REPLACEMENT (SALMON CREEK AVE.)
TYPICAL SECTIONS

| | |
|---|---|
| DESIGNED | PW |
| DRAWN | PW |
| CRP | 321222 |
| HOR. | N/A |
| VERT. | N/A |
| DATE | 11/03 |
| DWG: | TS2 |
| SHEET | A OF 36 |

CALL 48 HOURS BEFORE YOU DIG
1-800-553-4344
"It's the Law"
NORTHWEST UTILITIES NOTIFICATION CENTER

proud past, promising future
CLARK COUNTY
WASHINGTON

PLOT3

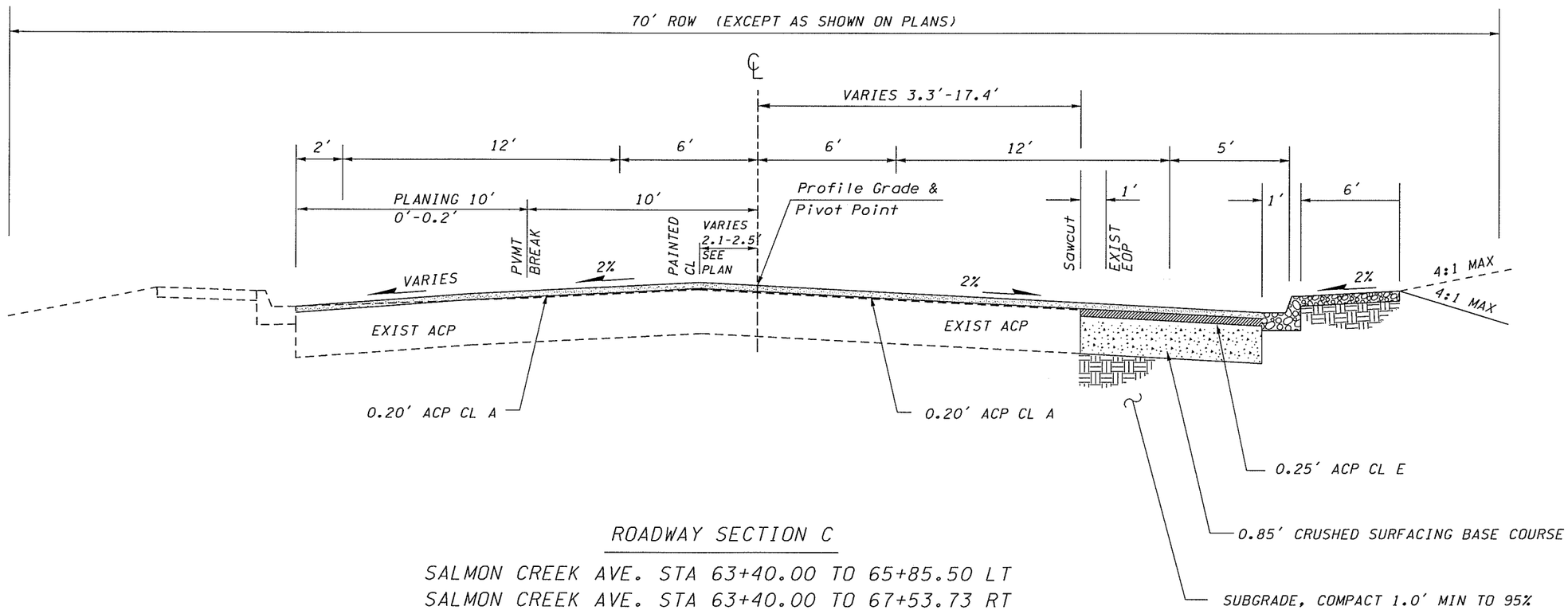


ROADWAY SECTION C

SALMON CREEK AVE. STA 63+40.00 TO 65+85.50 LT
SALMON CREEK AVE. STA 63+40.00 TO 67+53.73 RT

50% PLANS
PRELIMINARY

| | |
|---|---|
| DESIGNED | PW |
| DRAWN | PW |
| CRP | 321222 |
| HOR. | N/A |
| VERT. | N/A |
| DATE | 11/03 |
| DWG: | TS3 |
| SHEET | 5 OF 36 |

CALL 48 HOURS BEFORE YOU DIG
1-800-553-4344
"It's the Law"
NORTHWEST UTILITIES NOTIFICATION CENTER

DESIGN & ENGINEERING DIVISION
DESIGN SECTION

BETTS BRIDGE #26 REPLACEMENT (SALMON CREEK AVE.)
TYPICAL SECTIONS

proud past, promising future
CLARK COUNTY
WASHINGTON

PLOT3

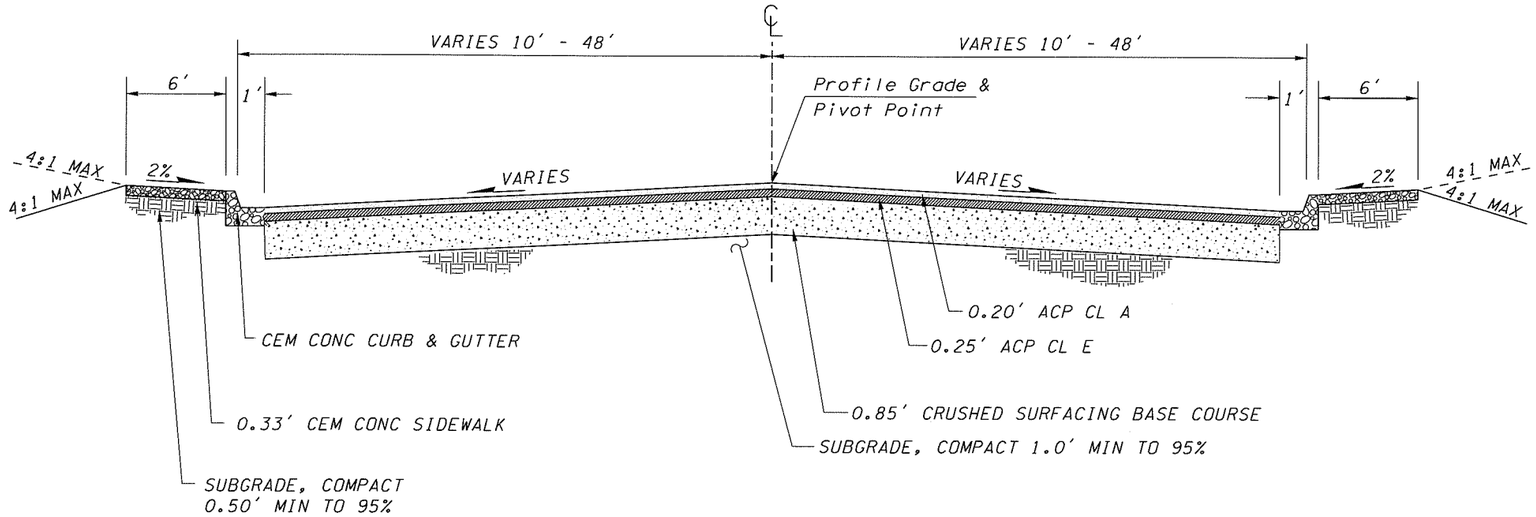


ROADWAY SECTION D

CORBIN ROAD STA 23+00.00 TO 10+60.40

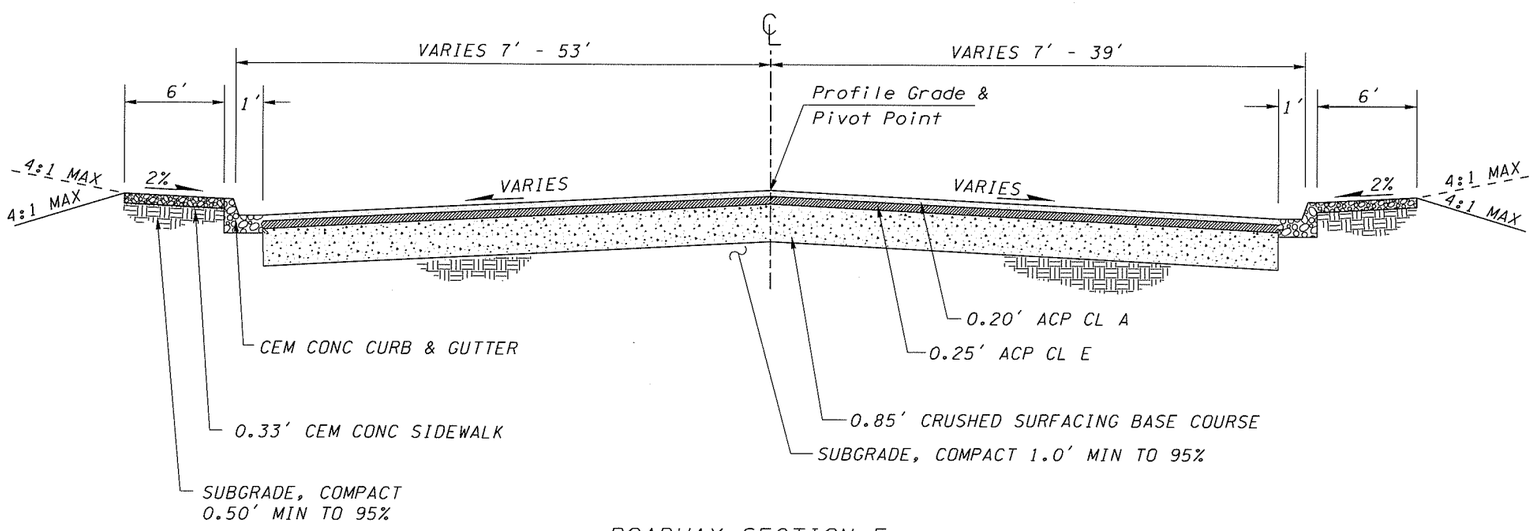


ROADWAY SECTION E

BETTS ROAD STA 23+00.00 TO 10+95.00

50% PLANS
PRELIMINARY

| | |
|---|---|
| DESIGNED | PW |
| DRAWN | PW |
| CRP | 321222 |
| HOR. | N/A |
| VERT. | N/A |
| DATE | 11/03 |
| DWG: | TS4 |
| SHEET | 6 OF 26 |

CALL 48 HOURS BEFORE YOU DIG
1-800-553-4344
"It's the Law"
NORTHWEST UTILITIES NOTIFICATION CENTER

DESIGN & ENGINEERING DIVISION
DESIGN SECTION

BETTS BRIDGE #26 REPLACEMENT (SALMON CREEK AVE.)
TYPICAL SECTIONS

proud past, promising future
CLARK COUNTY
WASHINGTON

PLOT11

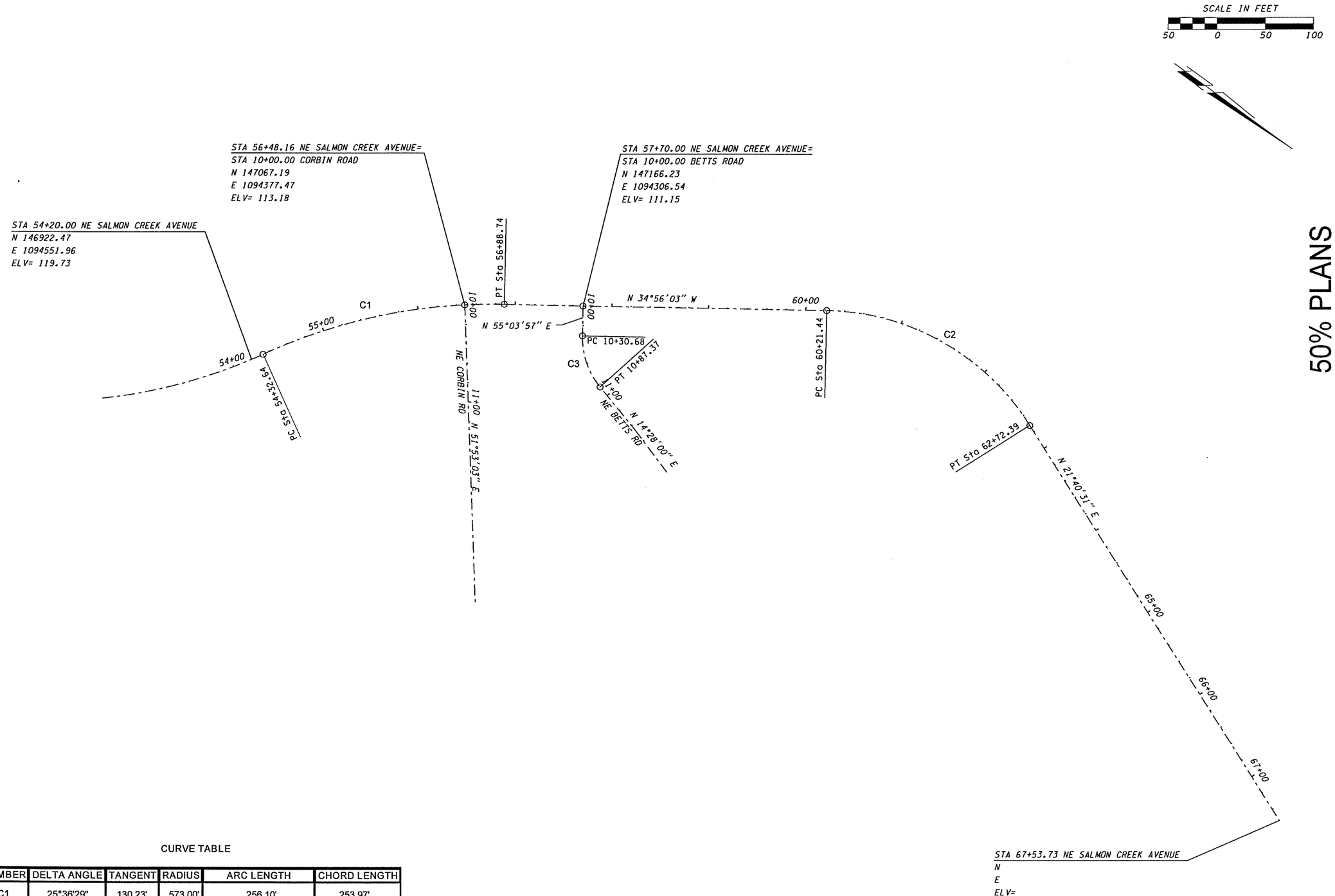


50% PLANS
PRELIMINARY

CURVE TABLE

| NUMBER | DELTA ANGLE | TANGENT | RADIUS | ARC LENGTH | CHORD LENGTH |
|---|---|---|---|---|---|
| C1 | 25°36'29" | 130.23' | 573.00' | 256.10' | 253.97' |
| C2 | 56°36'24" | 136.78' | 254.00' | 250.95' | 240.86' |
| C3 | 40°36'02" | 29.59' | 80.00' | 56.69' | 55.51' |

PLOT1

| | |
|---|---|
| DESIGNED | PW |
| DRAWN | PW |
| CRP | 321222 |
| HOR. | 1" = 50' |
| VERT. | N/A |
| DATE | 11/03 |
| DWG: | HV1 |
| SHEET | 7 OF 30 |

CALL 48 HOURS BEFORE YOU DIG
1-800-553-4344
"It's the Law"
NORTHWEST UTILITIES NOTIFICATION CENTER

DESIGN & ENGINEERING DIVISION
DESIGN SECTION

BETTS BRIDGE #26 REPLACEMENT (SALMON CREEK AVE.)
HORIZONTAL / VERTICAL CONTROL

proud past, promising future
CLARK COUNTY
WASHINGTON

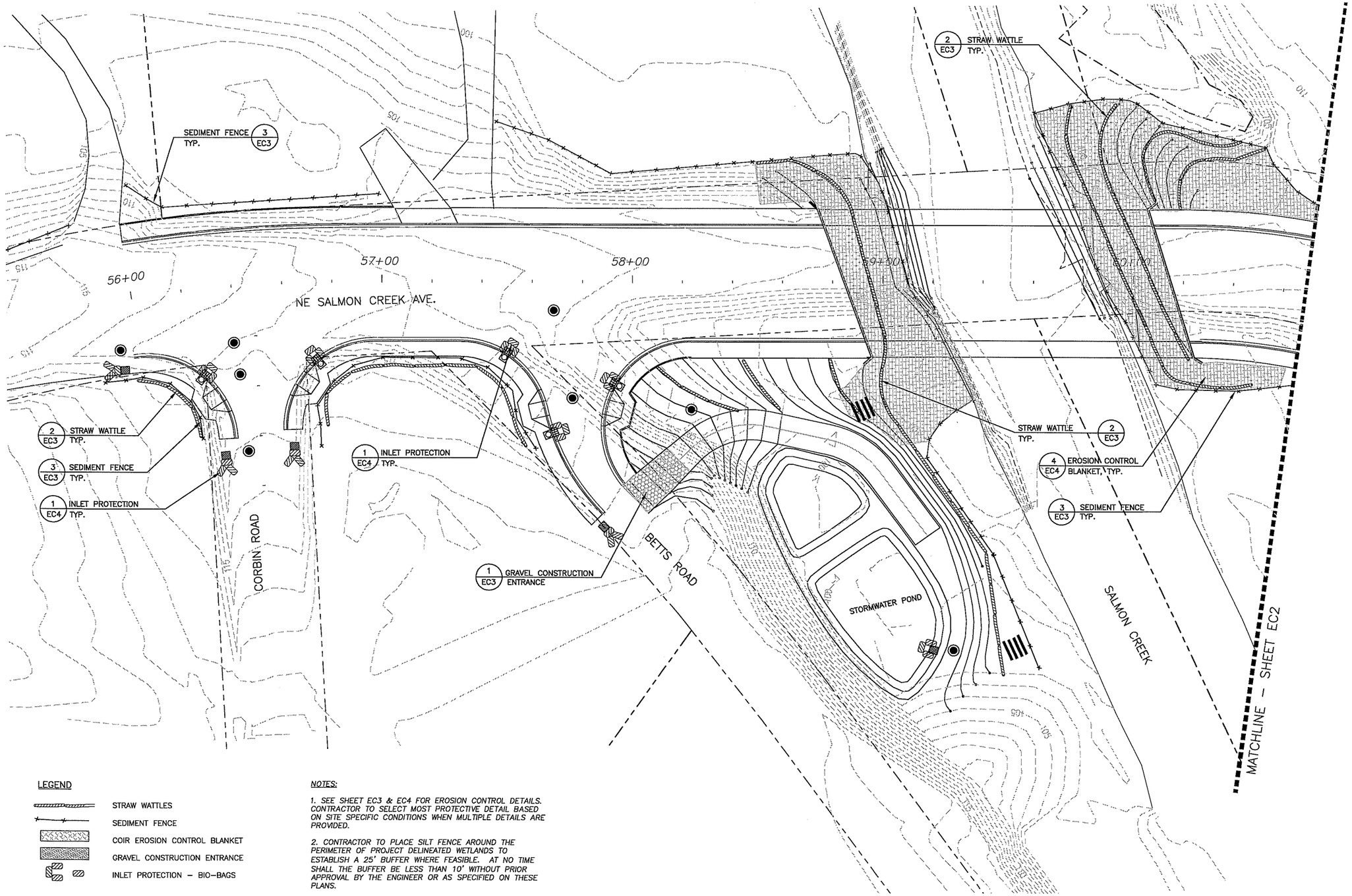


LEGEND

- STRAW WATTLES
- SEDIMENT FENCE
- COIR EROSION CONTROL BLANKET
- GRAVEL CONSTRUCTION ENTRANCE
- INLET PROTECTION – BIO-BAGS

*NOTES:*

*1. SEE SHEET EC3 & EC4 FOR EROSION CONTROL DETAILS. CONTRACTOR TO SELECT MOST PROTECTIVE DETAIL BASED ON SITE SPECIFIC CONDITIONS WHEN MULTIPLE DETAILS ARE PROVIDED.*

*2. CONTRACTOR TO PLACE SILT FENCE AROUND THE PERIMETER OF PROJECT DELINEATED WETLANDS TO ESTABLISH A 25' BUFFER WHERE FEASIBLE. AT NO TIME SHALL THE BUFFER BE LESS THAN 10' WITHOUT PRIOR APPROVAL BY THE ENGINEER OR AS SPECIFIED ON THESE PLANS.*

EROSION CONTROL PLAN (BOP TO 60+70)

SCALE: 1"=20'

SCALE IN FEET

20 0 20 40

50% PLANS - PRELIMINARY

| | |
|---|---|
| DESIGNED | MWK/TLJ |
| DRAWN | MWK/TLJ |
| CRP | 321222 |
| HOR. | 1"=20' |
| VERT. | NA |
| DATE | 11-21-03 |
| DWG: | EC1 |
| SHEET | 8 OF 36 |

CALL 48 HOURS BEFORE YOU DIG 1-800-553-4344 "It's the Law" NORTHWEST UTILITY NOTIFICATION CENTER

DESIGN & ENGINEERING DIVISION
DESIGN SECTION

*BETTS BRIDGE #26 REPLACEMENT (SALMON CREEK AVE.)*
*EROSION CONTROL PLAN (BOP TO 60+70)*

proud past, promising future

CLARK COUNTY WASHINGTON

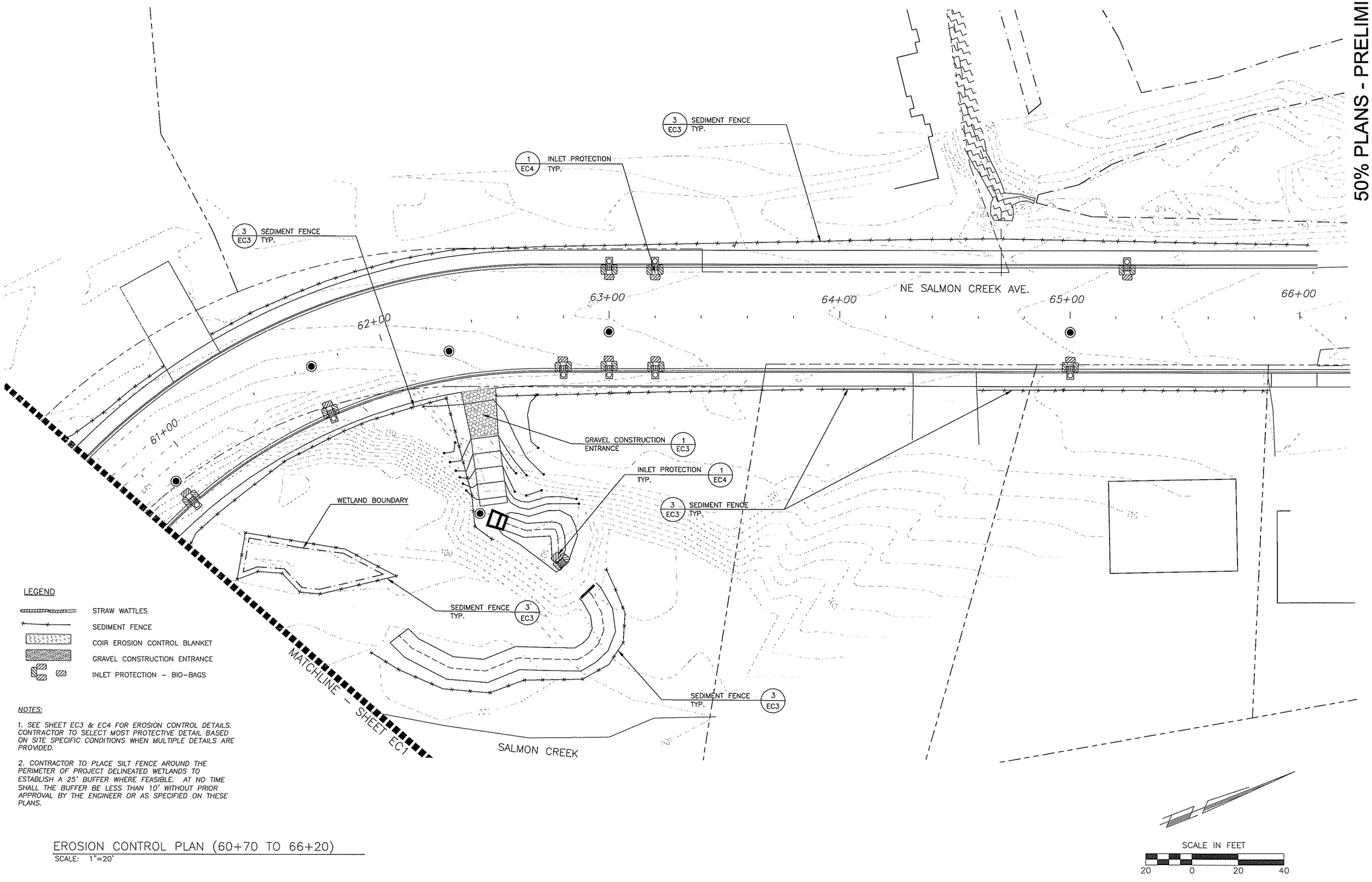


LEGEND

- STRAW WATTLES
- SEDIMENT FENCE
- COIR EROSION CONTROL BLANKET
- GRAVEL CONSTRUCTION ENTRANCE
- INLET PROTECTION – BIO–BAGS

NOTES:

1. SEE SHEET EC3 & EC4 FOR EROSION CONTROL DETAILS. CONTRACTOR TO SELECT MOST PROTECTIVE DETAIL BASED ON SITE SPECIFIC CONDITIONS WHEN MULTIPLE DETAILS ARE PROVIDED.

2. CONTRACTOR TO PLACE SILT FENCE AROUND THE PERIMETER OF PROJECT DELINEATED WETLANDS TO ESTABLISH A 25' BUFFER WHERE FEASIBLE. AT NO TIME SHALL THE BUFFER BE LESS THAN 10' WITHOUT PRIOR APPROVAL BY THE ENGINEER OR AS SPECIFIED ON THESE PLANS.

EROSION CONTROL PLAN (60+70 TO 66+20)

SCALE: 1"=20'

50% PLANS - PRELIMINARY

| | |
|---|---|
| DESIGNED | MWK/TLJ |
| DRAWN | MWK/TLJ |
| CRP | 321222 |
| HOR. | 1"=20' |
| VERT. | NA |
| DATE | 11-21-03 |
| DWG: | EC2 |
| SHEET | 9 OF 36 |

CALL 48 HOURS BEFORE YOU DIG
1-800-553-4344
"It's the Law"
NORTHWEST UTILITIES NOTIFICATION CENTER

DESIGN & ENGINEERING DIVISION
DESIGN SECTION

BETTS BRIDGE #26 REPLACEMENT (SALMON CREEK AVE.)
EROSION CONTROL PLAN (60+70 TO 66+20)

proud past, promising future
CLARK COUNTY WASHINGTON

# EROSION CONTROL NOTES

1. THE CONTRACTOR SHALL INSTALL AND MAINTAIN EROSION PREVENTION AND SEDIMENT CONTROL (ESC) BEST MANAGEMENT PRACTICES (BMPs) AS SHOWN AND PERFORM ALL ACTIONS NECESSARY TO PREVENT EROSION AND TO CONTROL SEDIMENT FROM THE CONSTRUCTION SITE. THE CONTRACTOR SHALL COMPLY WITH CLARK COUNTY CODES:
   CODE 13.29 STORMWATER & EROSION CONTROL
   CODE 13.26A WATER QUALITY
   CODE 13.36 WETLAND PROTECTION
2. ALL ESC MEASURES SHALL BE IN-PLACE AND IN WORKING CONDITION PRIOR TO DISTURBING AND EXPOSING SOIL SURFACES (I.E. SILT FENCE, CONSTRUCTION ENTRANCE, SEDIMENTATION BARRIERS, SEDIMENT TRAPS).
3. ALL ESC BMPs SHALL BE MAINTAINED AND REPAIRED AS NEEDED TO ENSURE CONTINUED PERFORMANCE OF THEIR INTENDED FUNCTION. NEEDED REPAIRS SHALL BE MADE AS SOON AS PRACTICABLE. BMPs ARE TO REMAIN IN PLACE AND OPERATIONAL DURING ALL PHASES OF CONSTRUCTION. CONSTRUCTION ACTIVITIES SHALL NOT CONTINUE OR RESUME UNTIL NEEDED REPAIRS TO ESC FACILITIES ARE MADE AND THOSE FACILITIES ARE FUNCTIONAL. ANY SEDIMENT LEAVING THE SITE OR DISCHARGING TO A SENSITIVE AREA SHALL BE STOPPED AND CONTROLLED IMMEDIATELY. CONTAMINATED AREAS SHALL BE APPROPRIATELY CLEANED AND RESTORED.
4. CLEARING LIMITS AND WORK AREA LIMITS SHALL BE DELINEATED AND MARKED IN THE FIELD. DO NOT DISTURB MORE AREA THAN NEEDED FOR CONSTRUCTION REQUIREMENTS.
5. ALL SENSITIVE OR CRITICAL AREAS (WETLANDS, STEEP SLOPES, NATURAL WATERWAYS), AND BUFFERS SHALL BE CLEARLY DELINEATED, MARKED AND PROTECTED FROM SEDIMENT DEPOSITION.
6. SEDIMENT LADEN RUNOFF SHALL BE PREVENTED FROM ENTERING ALL STORMWATER FACILITIES, SUCH AS CATCH BASINS AND INLETS AFFECTED BY CONSTRUCTION.
7. EXPOSED, BARE SOILS SHALL NOT REMAIN UNSTABILIZED FOR MORE THAN TWO DAYS DURING THE PERIOD OF OCTOBER 1 THRU APRIL 30 OR FOR MORE THAN SEVEN DAYS DURING THE PERIOD OF MAY 1 THRU SEPTEMBER 30. ALL DISTURBED SOIL SURFACES SHALL BE STABILIZED BY A SUITABLE APPLICATION OF BMPs, SUBJECT TO APPROVAL BY OWNER'S REPRESENTATIVE.
8. WHERE FEASIBLE, NO MORE THAN 500 FEET OF TRENCH SHALL BE OPEN AT ONE TIME. EXCAVATED MATERIAL SHALL BE PLACED ON THE UPHILL SIDE OF TRENCHES PROVIDED IT DOES NOT CONFLICT WITH SAFETY REQUIREMENTS.
9. DEWATERING DEVICES SHALL DISCHARGE INTO A SEDIMENT TRAP OR SEDIMENT POND. NO DISCHARGE SHALL BE MADE TO A PAVED STREET OR STORMWATER COLLECTION SYSTEM WITHOUT FIRST REMOVING SEDIMENT.
10. CUT AND FILL SLOPES SHALL BE CONSTRUCTED IN A MANNER THAT MINIMIZES EROSION. EROSION SHALL BE PREVENTED BY SUCH MEASURES AS ROUGHENING THE SURFACE, INSTALLING INTERCEPTOR DITCHES, TERRACING, AND COVERING SUSCEPTIBLE AREAS WITH MATTING, MULCH OR PLASTIC SHEETING. RUNOFF SHALL BE PREVENTED FROM ENTERING AN EXPOSED SLOPE AND FROM UNDERCUTTING THE BASE OF SLOPES.
11. ANY SOIL OR DEBRIS DEPOSITED ONTO ROADWAYS AND SIDEWALKS SHALL BE REMOVED. DEBRIS DEPOSITS SHALL BE COMPLETELY REMOVED BY SHOVELING AND/OR SWEEPING. DO NOT HYDRAULICALLY WASH DEPOSITION AREAS UNLESS SPECIFICALLY APPROVED IN WRITING BY AN OWNER'S REPRESENTATIVE.
12. ALL PERMANENT INFILTRATION SYSTEMS SHALL BE ISOLATED AND PROTECTED FROM SEDIMENT LADEN RUNOFF TO AVOID RISK OF DAMAGE OR DECREASED FUNCTION. ISOLATION AND PROTECTION MEASURES SHALL NOT BE REMOVED UNTIL THE DRAINAGE AREA ABOVE THE SYSTEM IS COMPLETELY STABILIZED.
13. ALL CONVEYANCE CHANNELS, BOTH TEMPORARY AND PERMANENT, SHALL BE STABILIZED TO PREVENT CHANNEL EROSION, SCOUR, AND BANK INSTABILITY. STABILIZATION SHALL ALSO INCLUDE AREAS AT OUTLETS AND DOWNSTREAM REACHES VULNERABLE TO EROSION AS A RESULT OF THE PROJECT.
14. IF BMPs SHOWN ARE INSUFFICIENT TO PREVENT SEDIMENT FROM REACHING WATER BODIES, ADJACENT PROPERTIES, OR PUBLIC RIGHTS-OF-WAY; ADDITIONAL BMP'S SHALL BE IMPLEMENTED IMMEDIATELY TO PREVENT FURTHER ENCROACHMENT OF SEDIMENT.
15. STABILIZED AREAS SHALL BE PROVIDED FOR STAGING AREAS, INCLUDING EMPLOYEE PARKING AND MATERIALS STORAGE. ERODIBLE STOCKPILES OF EARTHEN MATERIALS, SUCH AS TOPSOIL, SILTY AND CLAYEY SOILS; AND LANDSCAPE MATERIALS, SHALL BE COVERED WHEN NOT BEING INCORPORATED IN THE WORK. INSTALL EROSION CONTROL BMP'S AS NECESSARY AND NOTIFY AN OWNER'S REPRESENTATIVE OF ANY PROBLEMS.
16. ALL POLLUTANTS OTHER THAN SEDIMENT THAT OCCUR DURING CONSTRUCTION SHALL BE PROPERLY HANDLED AND DISPOSED OF TO PREVENT CONTAMINATION OF STORMWATER.
17. THE CONTRACTOR SHALL KEEP AN INSPECTION LOG OF THE CONDITION OF THE EROSION CONTROL FACILITIES. EROSION CONTROL FACILITIES SHALL BE INSPECTED AT LEAST WEEKLY AND AFTER EACH RAINFALL. THE INSPECTION LOG SHALL BE KEPT AT THE PROJECT SITE AT A DESIGNATED LOCATION AND SHALL BE AVAILABLE FOR REVIEW BY THE OWNER'S REPRESENTATIVES. AN INDIVIDUAL THAT HAS SUCCESSFULLY COMPLETED CLARK COUNTY'S EROSION CONTROL CERTIFICATION COURSE SHALL PERFORM INSPECTIONS AND MAINTAIN THE LOG.
18. ALL TEMPORARY BMPs SHALL BE REMOVED WITHIN 30 DAYS FOLLOWING FINAL SITE STABILIZATION. TRAPPED SEDIMENT SHALL BE DEPOSITED AND STABILIZED ON SITE AS DIRECTED BY OWNER'S REPRESENTATIVE. AREAS DISTURBED AS A RESULT OF BMP REMOVAL SHALL BE PERMANENTLY STABILIZED.
19. CONSTRUCTION SHALL NOT BE CONSIDERED COMPLETE AND ACCEPTABLE UNTIL ALL DISTURBED SOIL SURFACES HAVE BEEN PROTECTED FROM EROSION WITH PERMANENT LANDSCAPING, IMPERVIOUS COVER, OR PERMANENT STABILIZATION.
20. VEGETATED STABILIZATION AND LANDSCAPING SHALL BE FERTILIZED, WATERED, AND MAINTAINED TO INSURE VEGETATION GROWTH AND ESTABLISHMENT.
21. DURING DRY WEATHER PERIODS THE CONTRACTOR SHALL PROVIDE PROJECT-SPECIFIC DUST CONTROL MEASURES THAT MAY INCLUDE: SEEDING, MULCHING, MATTING, WATER, TACKIFIER, OR CHEMICAL SOIL STABILIZERS. THE CONTRACTOR SHALL MAINTAIN THE DUST CONTROL MEASURES THROUGH DRY WEATHER PERIODS UNTIL ALL DISTURBED AREAS HAVE BEEN STABILIZED. IMMEDIATELY RE-STABILIZE AREAS DISTURBED BY CONTRACTOR'S OPERATIONS OR OTHER EROSION-CONTRIBUTING FACTORS (WIND, WATER, VANDALISM, ETC.).

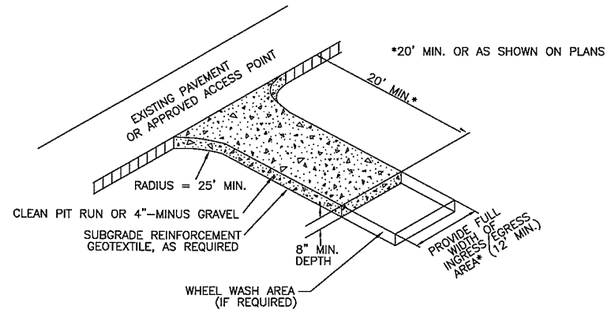


1 STABILIZED CONSTRUCTION ENTRANCE
SCALE: NTS

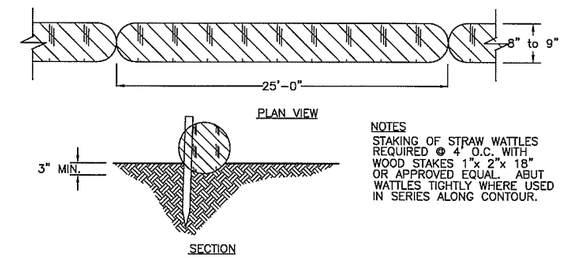


NOTES
STAKING OF STRAW WATTLES REQUIRED @ 4' O.C. WITH WOOD STAKES 1"x 2"x 18" OR APPROVED EQUAL. ABUT WATTLES TIGHTLY WHERE USED IN SERIES ALONG CONTOUR.

2 STRAW WATTLES
SCALE: NTS

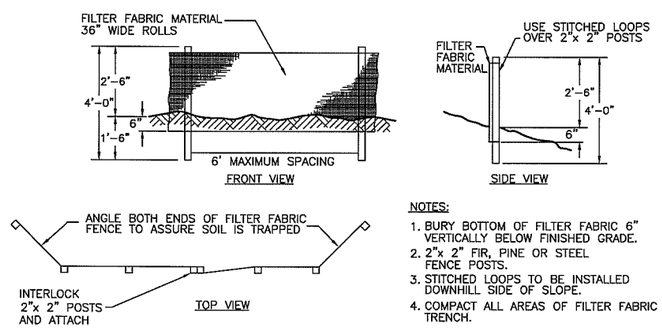


NOTES:
1. BURY BOTTOM OF FILTER FABRIC 6" VERTICALLY BELOW FINISHED GRADE.
2. 2"x 2" FIR, PINE OR STEEL FENCE POSTS.
3. STITCHED LOOPS TO BE INSTALLED DOWNHILL SIDE OF SLOPE.
4. COMPACT ALL AREAS OF FILTER FABRIC TRENCH.

3 SEDIMENT FENCE
SCALE: NTS

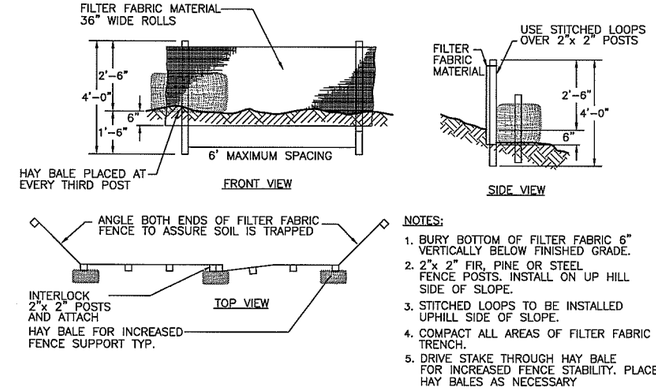


NOTES:
1. BURY BOTTOM OF FILTER FABRIC 6" VERTICALLY BELOW FINISHED GRADE.
2. 2"x 2" FIR, PINE OR STEEL FENCE POSTS. INSTALL ON UP HILL SIDE OF SLOPE.
3. STITCHED LOOPS TO BE INSTALLED UPHILL SIDE OF SLOPE.
4. COMPACT ALL AREAS OF FILTER FABRIC TRENCH.
5. DRIVE STAKE THROUGH HAY BALE FOR INCREASED FENCE STABILITY. PLACE HAY BALES AS NECESSARY

4 SUPPORTED SEDIMENT FENCE
SCALE: NTS

50% PLANS - PRELIMINARY

| | |
|---|---|
| DESIGNED | MWK |
| DRAWN | MWK |
| CRP | 321222 |
| HOR. | NA |
| VERT. | NA |
| DATE | 11-21-03 |
| DWG: | EC3 |
| SHEET | 10 OF 36 |

CALL 48 HOURS BEFORE YOU DIG 1-800-553-4344 "It's the Law" NORTHWEST UTILITIES NOTIFICATION CENTER

DESIGN & ENGINEERING DIVISION
DESIGN SECTION

BETTS BRIDGE #26 REPLACEMENT (SALMON CREEK AVE.)
EROSION CONTROL DETAILS - SHEET 1

proud past, promising future
CLARK COUNTY WASHINGTON

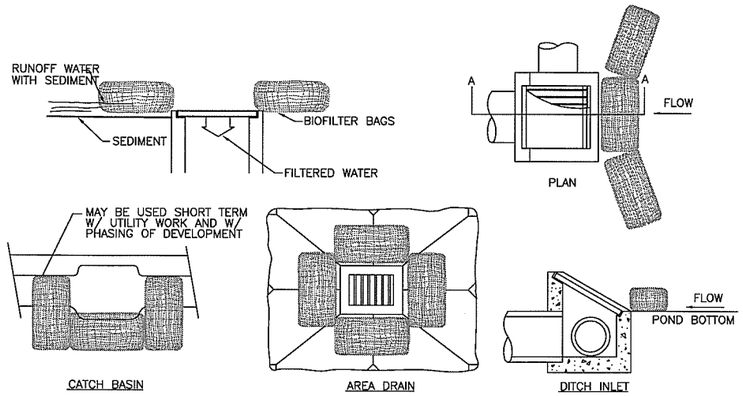


1 INLET PROTECTION

SCALE: NTS

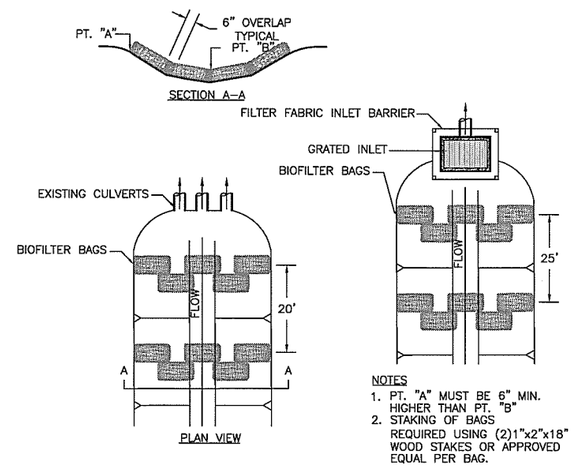


NOTES
1. PT. "A" MUST BE 6" MIN. HIGHER THAN PT. "B"
2. STAKING OF BAGS REQUIRED USING (2)1"x2"x18" WOOD STAKES OR APPROVED EQUAL PER BAG.

2 DRAINAGE SWALE PROTECTION

SCALE: NTS

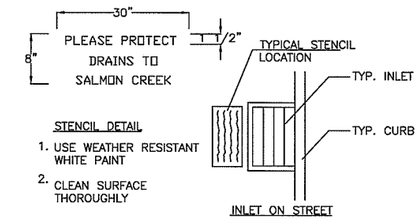


STENCIL DETAIL
1. USE WEATHER RESISTANT WHITE PAINT
2. CLEAN SURFACE THOROUGHLY

NOTES
1. ALL CATCH BASINS AND MANHOLES CAPABLE OF ACCEPTING STORMWATER SHALL BE STENCILED. FOR INFILTRATION SYSTEMS STENCILING SHALL READ: "PLEASE PROTECT–DRAINS TO DRINKING WATER".
2. FOR FACILITIES DRAINING TO SURFACE WATERS THE STENCILING SHALL READ: "PLEASE PROTECT–DRAINS TO SALMON CREEK".
3. SIGNS SHALL BE INSTALLED ALONG WATER QUALITY BIOFILTRATION SYSTEMS THAT READ: "WATER QUALITY FILTER–PLEASE LEAVE VEGETATED".
4. FENCED DETENTION AND RETENTION BASINS SHALL BE MARKED WITH A SIGN THAT READS: "PUBLIC STORMWATER CONTROL FACILITY".

3 INLET STENCIL DETAIL

SCALE: NTS

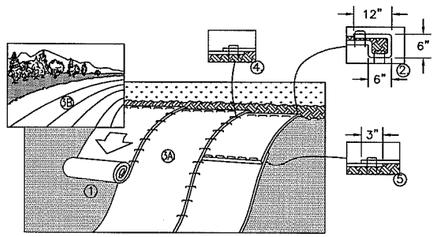


INSTALLATION
1. PREPARE SOIL BEFORE INSTALLING BLANKETS, INCLUDING ANY NECESSARY APPLICATION OF LIME, FERTILIZER, AND SEED.
2. BEGIN AT THE TOP OF THE SLOPE BY ANCHORING THE BLANKET IN A 6" (15cm) DEEP X 6" (15cm) WIDE TRENCH WITH APPROXIMATELY 12" (30cm) OF BLANKET EXTENDED BEYOND THE UP–SLOPE PORTION OF THE TRENCH. ANCHOR THE BLANKET WITH A ROW OF STAPLES/STAKES APPROXIMATELY 12" (30cm) APART IN THE BOTTOM OF THE TRENCH. BACKFILL AND COMPACT THE TRENCH AFTER STAPLING. APPLY SEED TO COMPACTED SOIL AND FOLD REMAINING 12" (30cm) PORTION OF BLANKET BACK OVER SEED AND COMPACTED SOIL. SECURE BLANKET OVER COMPACTED SOIL WITH A ROW OF STAPLES/STAKES SPACED APPROXIMATELY 12" (30cm) APART ACROSS THE WIDTH OF THE BLANKET.
3. ROLL THE BLANKETS (A.) DOWN OR (B.) HORIZONTALLY ACROSS THE SLOPE. BLANKETS WILL UNROLL WITH APPROPRIATE SIDE AGAINST THE SOIL SURFACE. ALL BLANKETS MUST BE SECURELY FASTENED TO SOIL SURFACE BY PLACING STAPLES/STAKES IN APPROPRIATE LOCATIONS AS SHOWN IN THE STAPLE PATTERN GUIDE.
4. THE EDGES OF PARALLEL BLANKETS MUST BE STAPLED WITH MINIMUM 6" (10cm) OVERLAP.
5. CONSECUTIVE BLANKETS SPLICED DOWN THE SLOPE MUST BE PLACED END OVER END (SHINGLE STYLE) WITH MINIMUM 6" (15cm) OVERLAP. STAPLE THROUGH OVERLAPPED AREA, APPROXIMATELY 12" (30cm) APART ACROSS ENTIRE BLANKET WIDTH.

NOTES
1. IN LOOSE SOIL CONDITIONS, THE USE OF STAPLE OR STAKE LENGTHS GREATER THAN 6" (15cm) MAY BE NECESSARY TO PROPERLY SECURE THE BLANKETS.
2. INSTALL PRODUCT IN ACCORDANCE WITH MANUFACTURER'S SPECIFICATIONS.

4 EROSION CONTROL BLANKET–SLOPES

SCALE: NTS

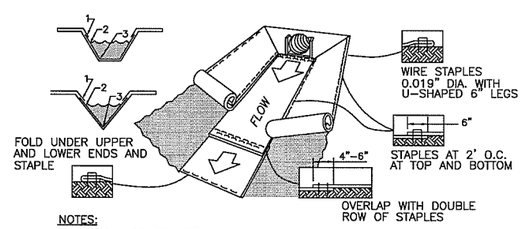


NOTES:
A. CRITICAL POINTS ARE:
1. OVERLAPS AND SEAMS
2. PROJECTED WATER LINE
3. CHANNEL BOTTOM/SIDE SLOPE VERTICES

B. HORIZONTAL STAPLE SPACING SHOULD BE ALTERED IF NECESSARY TO ALLOW STAPLES TO SECURE THE CRITICAL POINTS ALONG THE CHANNEL SURFACE.
C. IN LOOSE SOIL CONDITIONS, THE USE OF STAPLE OR STAKE LENGTHS GREATER THAN 6" (15cm) MAY BE NECESSARY TO PROPERLY ANCHOR THE BLANKETS.
D. INSTALL PRODUCT IN ACCORDANCE WITH MANUFACTURER'S SPECIFICATIONS.

5 EROSION CONTROL BLANKET–CHANNEL

SCALE: NTS

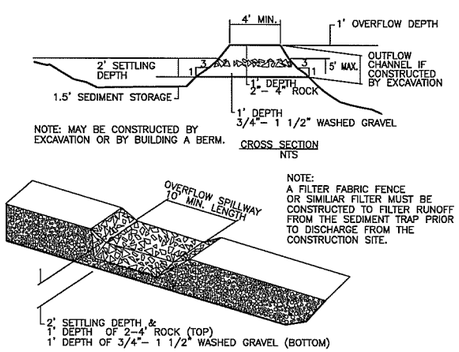


6 SEDIMENTATION BASIN & FILTER

SCALE: NTS

50% PLANS - PRELIMINARY

| | |
|---|---|
| DESIGNED | MWK |
| DRAWN | MWK |
| CRP | 321222 |
| HOR. | NA |
| VERT. | NA |
| DATE | 11–21–03 |
| DWG: | EC4 |
| SHEET | 11 OF 36 |

CALL 48 HOURS BEFORE YOU DIG
1–800–553–4344
"It's the Law"
NORTHWEST UTILITY NOTIFICATION CENTER

DESIGN & ENGINEERING DIVISION
DESIGN SECTION

*BETTS BRIDGE #26 REPLACEMENT (SALMON CREEK AVE.)*
*EROSION CONTROL DETAILS – SHEET 2*

proud past, promising future
CLARK COUNTY WASHINGTON

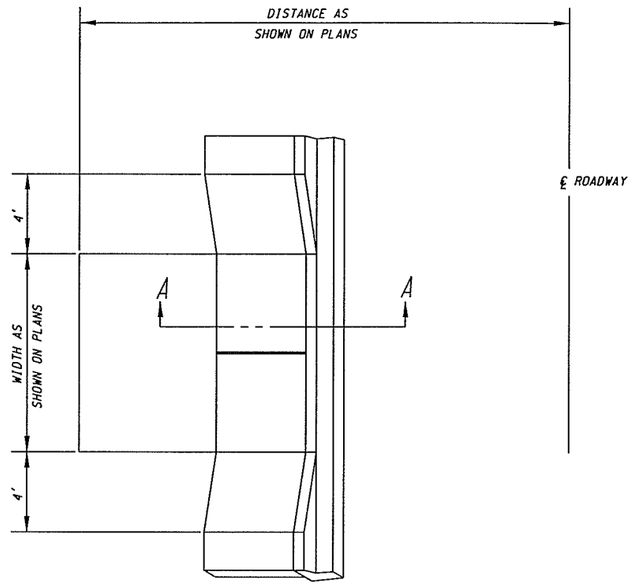


## TYPICAL DRIVEWAY ENTRANCE

NTS

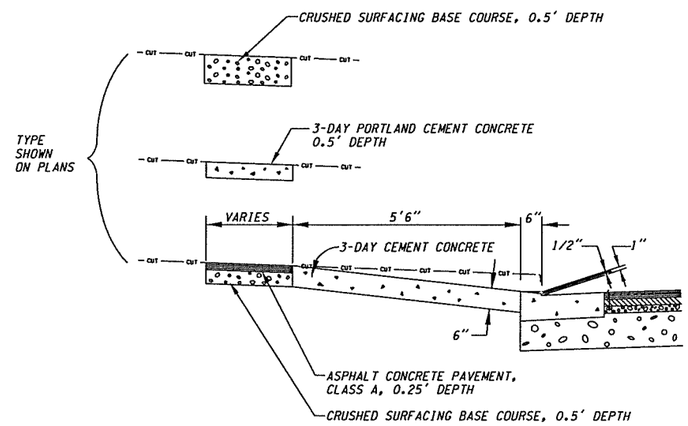


## SECTION A-A

NTS

| APPROACH SCHEDULE | | | | |
|---|---|---|---|---|
| STATION | WIDTH (L.F.) | LENGTH (L.F.) | SLOPE (%) | REMARKS |
| 55+80 LT | 20 | 100 | 15 | ASPHALT CONCRETE |
| 57+25 LT | 40 | 70 | 15 | CEMENT CONC. APPROACH TYPE 3 |
| 61+24 LT | 24 | 69 | 5 | CEMENT CONC. APPROACH TYPE 3 |
| 64+44.5 RT | 27 | 35 | 6 | CEMENT CONC. APPROACH TYPE 3 |
| 65+97.5 RT | 16 | 35 | 9 | CEMENT CONC. APPROACH TYPE 3 |
| POND ACCESS | 11 | | | CEMENT CONC. APPROACH TYPE 3 |

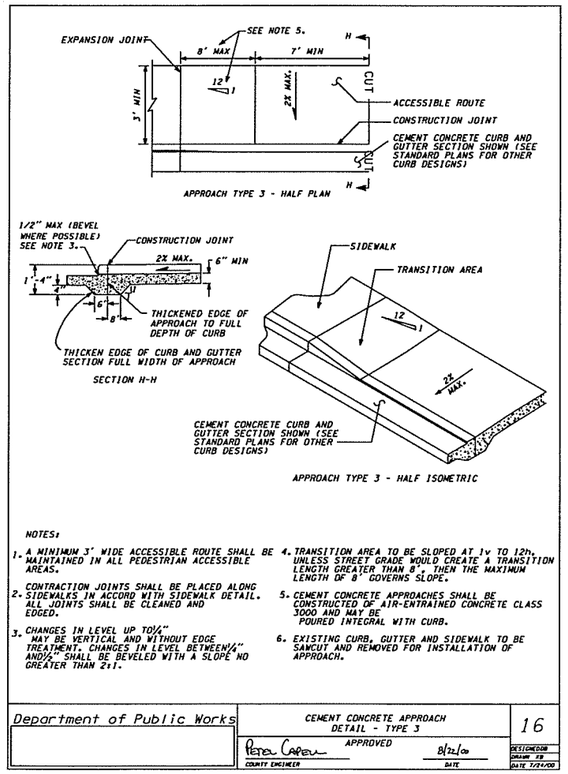


NOTES:

1. A MINIMUM 3' WIDE ACCESSIBLE ROUTE SHALL BE MAINTAINED IN ALL PEDESTRIAN ACCESSIBLE AREAS.
2. CONTRACTION JOINTS SHALL BE PLACED ALONG SIDEWALKS IN ACCORD WITH SIDEWALK DETAIL. ALL JOINTS SHALL BE CLEANED AND EDGED.
3. CHANGES IN LEVEL UP TO 1/4" MAY BE VERTICAL AND WITHOUT EDGE TREATMENT. CHANGES IN LEVEL BETWEEN 1/4" AND 1/2" SHALL BE BEVELED WITH A SLOPE NO GREATER THAN 2:1.
4. TRANSITION AREA TO BE SLOPED AT 1v TO 12h, UNLESS STREET GRADE WOULD CREATE A TRANSITION LENGTH GREATER THAN 8', THEN THE MAXIMUM LENGTH OF 8' GOVERNS SLOPE.
5. CEMENT CONCRETE APPROACHES SHALL BE CONSTRUCTED OF AIR-ENTRAINED CONCRETE CLASS 3000 AND MAY BE POURED INTEGRAL WITH CURB.
6. EXISTING CURB, GUTTER AND SIDEWALK TO BE SAWCUT AND REMOVED FOR INSTALLATION OF APPROACH.

| Department of Public Works | CEMENT CONCRETE APPROACH DETAIL - TYPE 3 | 16 |
|---|---|---|
| | APPROVED Peter Capen 8/22/00 COUNTY ENGINEER DATE | DESIGNCHECK DRAWN FB DATE 7/24/00 |

PLOT11

50% PLANS
PRELIMINARY

CALL 48 HOURS BEFORE YOU DIG
1-800-553-4344
"It's the Law"
NORTHWEST UTILITIES NOTIFICATION CENTER

| | |
|---|---|
| DESIGNED | PW |
| DRAWN | PW |
| CRP | 321222 |
| HOR. | N/A |
| VERT. | N/A |
| DATE | 11/03 |
| DWG: | R01 |
| SHEET | 12 OF 36 |

DESIGN & ENGINEERING DIVISION
DESIGN SECTION

BETTS BRIDGE #26 REPLACEMENT (SALMON CREEK AVE.)
ROADWAY DETAILS

proud past, promising future
CLARK COUNTY
WASHINGTON

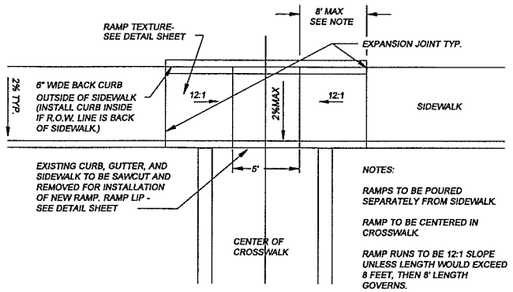


NOTES:

RAMPS TO BE POURED SEPARATELY FROM SIDEWALK.

RAMP TO BE CENTERED IN CROSSWALK.

RAMP RUNS TO BE 12:1 SLOPE UNLESS LENGTH WOULD EXCEED 8 FEET, THEN 8' LENGTH GOVERNS.

BACK CURB IS STANDARD BARRIER CURB.

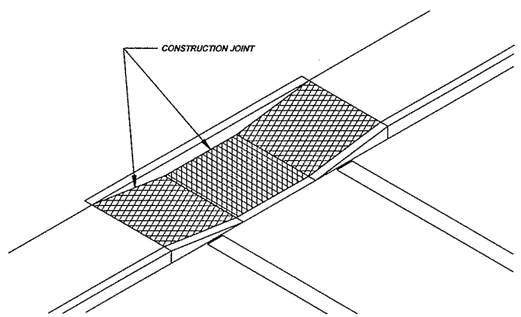


| NO. | REVISIONS | DATE | BY |
|---|---|---|---|
| | | | |

DWG: 3.dwg

Department of Public Works
CLARK COUNTY WASHINGTON

TYPE 3 RAMP

APPROVED
Peter Capell
COUNTY ENGINEER
8/22/00
DATE

3

DESIGNED DB
DRAWN KB
DATE 7/24/00

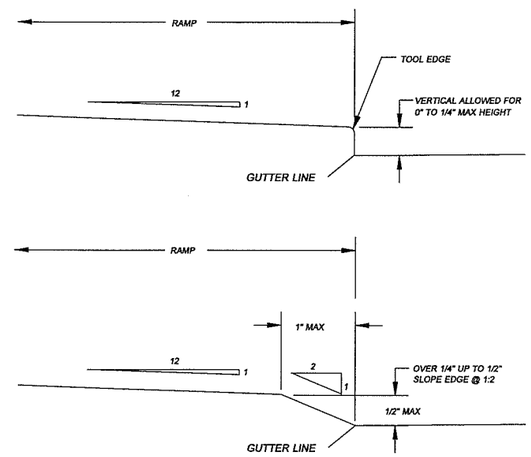


CHANGES UP TO 1/4" MAY BE VERTICAL AND WITHOUT EDGE TREATMENT. CHANGES IN LEVEL GREATER THAN 1/4" UP TO 1/2" SHALL HAVE THE WHOLE VERTICAL CHANGE BEVELED WITH A SLOPE NO GREATER THAN 2:1.

| NO. | REVISIONS | DATE | BY |
|---|---|---|---|
| | | | |

DWG: 10.dwg

Department of Public Works
CLARK COUNTY WASHINGTON

RAMP LIP DETAIL

APPROVED
Peter Capell
COUNTY ENGINEER
8/22/00
DATE

10

DESIGNED DB
DRAWN KB
DATE 7/24/00

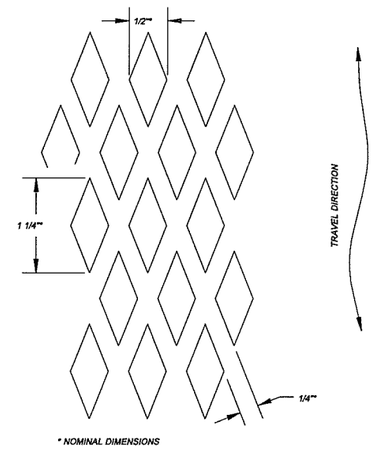


* NOMINAL DIMENSIONS

## RAMP TEXTURE DETAIL

RAMP TEXTURE IS TO BE DONE WITH AN EXPANDED METAL GRATE PLACED AND REMOVED FROM WET CONCRETE TO LEAVE A DIAMOND PATTERN AS SHOWN. THE LONG AXIS OF THE DIAMOND PATTERN SHALL BE IN THE DIRECTION OF TRAVEL. GROOVES SHALL BE 1/8" DEEP AND 1/4" WIDE. ALTERNATIVE TEXTURE PATTERNS SHALL BE APPROVED BY COUNTY ENGINEER BEFORE USE.

| NO. | REVISIONS | DATE | BY |
|---|---|---|---|
| | | | |

DWG: 11.dwg

Department of Public Works
CLARK COUNTY WASHINGTON

RAMP TEXTURE DETAIL

APPROVED
Peter Capell
COUNTY ENGINEER
8/22/00
DATE

11

DESIGNED DB
DRAWN KB
DATE 7/24/00

50% PLANS
PRELIMINARY

PLOT12

| | |
|---|---|
| DESIGNED | PW |
| DRAWN | PW |
| CRP | 321222 |
| HOR. | N/A |
| VERT. | N/A |
| DATE | 11/03 |
| DWG: | RD2 |
| SHEET | 12 OF 36 |

CALL 48 HOURS BEFORE YOU DIG
1-800-553-4344
"It's the Law"
NORTHWEST UTILITIES NOTIFICATION CENTER

DESIGN & ENGINEERING DIVISION
DESIGN SECTION

BETTS BRIDGE #26 REPLACEMENT (SALMON CREEK AVE.)
RAMP DETAILS

proud past, promising future
CLARK COUNTY
WASHINGTON

JOINT SPACING:
SURFACE JOINTS - 5'
CONTROL JOINTS - 15'
EXPANSION JOINTS AT, STRUCTURES, OBSTRUCTIONS, OR AS DIRECTED BY THE INSPECTOR.

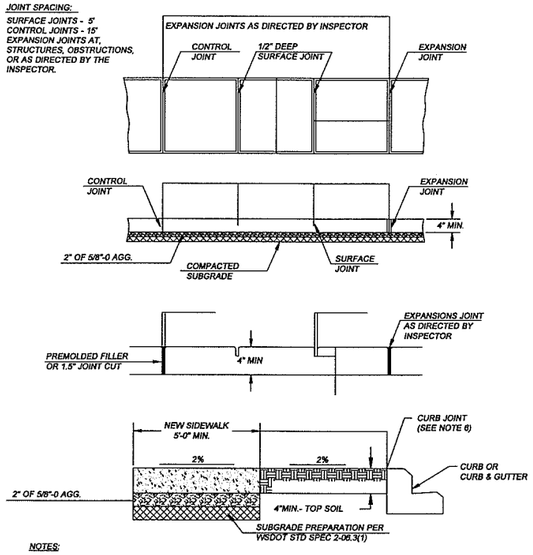


NOTES:

1. CONCRETE SHALL BE 3,000 PSI MIN. (CLASS 3000), 3 1/2" SLUMP (MAX.)
2. FINISH SHALL BE MEDIUM BROOM PERPENDICULAR TO PEDESTRIAN TRAFFIC UNLESS OTHERWISE DIRECTED.
3. ALL EXISTING EDGES SHALL BE SAWCUT.
4. NO FILLER REQUIRED FOR SURFACE JOINTS.
5. ALL JOINTS AND EDGES SHALL BE FINISHED WITH 1/4" RADIUS EDGER (3" SMOOTH EACH SIDE)
6. FOR SIDEWALKS ADJACENT TO THE CURB AND POURED AT THE SAME TIME AS THE CURB, THE JOINT BETWEEN THEM SHALL BE A TROWELED JOINT WITH A MIN. 1/2" RADIUS.

| NO. | REVISIONS | DATE | BY |
|---|---|---|---|
| 1 | CHANGE SUBGRADE & | 03/26/02 | KB |
| 2 | 2" BASE AGG. & NOTES | 10/07/02 | SCH |

DWG: 12.dwg

Department of Public Works
CLARK COUNTY WASHINGTON
proud past, promising future

SIDEWALK DETAIL

STANDARD 12

APPROVED DRAFT

COUNTY ENGINEER — DATE

PLAN No.
DESIGNED DB
DRAWN KB
DATE 10/08/02

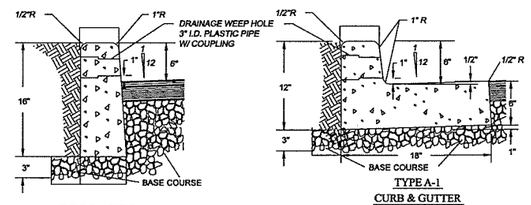


TYPE E-1 CURB

SEE WDOT STANDARD PLAN No. F-1

TYPE A-1 CURB & GUTTER

SEE WDOT STANDARD PLAN No. F-1

NOTES

1. CONCRETE SHALL BE 3000 PSI MIN. (CLASS 3000) 3 1/2" SLUMP (MAX.)
2. CURBS ADJACENT TO PAVEMENT OR SIDEWALK TO HAVE EXPANSION AND/OR CONTRACTION JOINTS TO MATCH EXISTING PATTERNS.
3. 3/8" EXPANSION JOINTS TO BE PROVIDED AT EACH POINT OF TANGENCY OF THE CURB, COLD JOINTS, EACH SIDE OF INLET STRUCTURES AND DRIVEWAYS. MATERIAL TO BE PRE-MOLDED, ASPHALT IMPREGNATED AND NON EXTRUDING.
4. CONTRACTION JOINT SPACING NOT TO EXCEED 15 FEET. THE DEPTH OF THE JOINT SHALL BE AT LEAST 1-1/2 INCHES. WEEP HOLES TO BE CENTERED WITH CONTRACTION JOINTS.
5. BASE COURSE SHALL BE TO SUBGRADE OF STREET SECTION OR 3 INCHES, WHICHEVER IS GREATER, AND SHALL EXTEND 6" BEHIND THE CURB.
6. DRAINAGE WEEP HOLES TO BE 3" I.D. PLASTIC PIPE WITH COUPLING. FINISH PIPE END FLUSH WITH FACE OF CURB.
7. GROUT ANY VOIDS IN CONCRETE SURROUNDING PIPE.
8. DRAINAGE ACCESS THROUGH EXISTING CURBS SHALL BE CORE DRILLED.
9. CURB TO BE BRUSH FINISHED. ALL EXISTING EDGES SHALL BE SAWCUT.
10. ALL MATERIALS AND WORKMANSHIP FOR TYPE E-1 & A-1 SHALL BE IN ACCORDANCE WITH WDOT STANDARD PLAN No. F-1, APPROVED 7/18/97 OR MOST CURRENT REVISION.

| NO. | REVISIONS | DATE | BY |
|---|---|---|---|
| | | | |

DWG: 18.DWG

Department of Public Works
CLARK COUNTY WASHINGTON
proud past, promising future

CONCRETE CURBS

STANDARD 18

APPROVED DRAFT

COUNTY ENGINEER — DATE

PLAN No.
DESIGNED SCH
DRAWN SCH
DATE 07/01/02

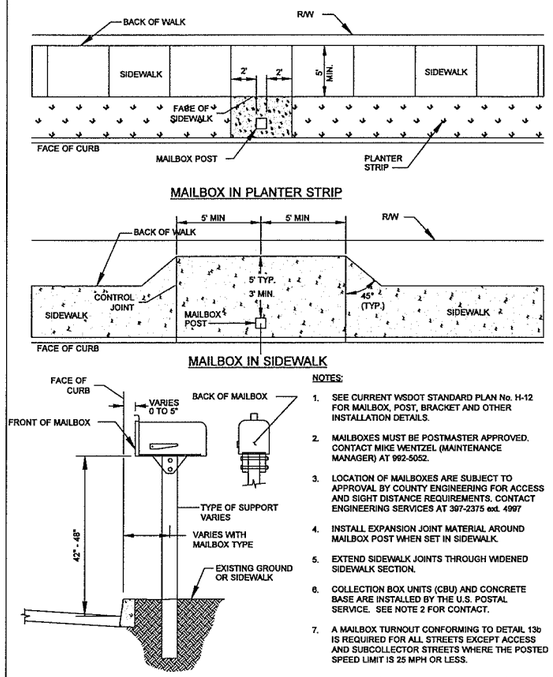


NOTES:

1. SEE CURRENT WSDOT STANDARD PLAN No. H-12 FOR MAILBOX, POST, BRACKET AND OTHER INSTALLATION DETAILS.
2. MAILBOXES MUST BE POSTMASTER APPROVED. CONTACT MIKE WENTZEL (MAINTENANCE MANAGER) AT 992-5052.
3. LOCATION OF MAILBOXES ARE SUBJECT TO APPROVAL BY COUNTY ENGINEERING FOR ACCESS AND SIGHT DISTANCE REQUIREMENTS. CONTACT ENGINEERING SERVICES AT 397-2375 ext. 4997
4. INSTALL EXPANSION JOINT MATERIAL AROUND MAILBOX POST WHEN SET IN SIDEWALK.
5. EXTEND SIDEWALK JOINTS THROUGH WIDENED SIDEWALK SECTION.
6. COLLECTION BOX UNITS (CBU) AND CONCRETE BASE ARE INSTALLED BY THE U.S. POSTAL SERVICE. SEE NOTE 2 FOR CONTACT.
7. A MAILBOX TURNOUT CONFORMING TO DETAIL 13b IS REQUIRED FOR ALL STREETS EXCEPT ACCESS AND SUBCOLLECTOR STREETS WHERE THE POSTED SPEED LIMIT IS 25 MPH OR LESS.

WSDOT STD. PLANS WEB SITE ADDRESS:
http://www.wsdot.wa.gov/eesc/design/designstandards/HTM/TOC.pdf

| NO. | REVISIONS | DATE | BY |
|---|---|---|---|
| | | | |

DWG: 13.DWG

Department of Public Works
CLARK COUNTY WASHINGTON
proud past, promising future

SIDEWALK MAILBOX PLACEMENT

STANDARD 13

APPROVED DRAFT

COUNTY ENGINEER — DATE

PLAN No.
DESIGNED SCH
DRAWN SCH
DATE 07/01/02

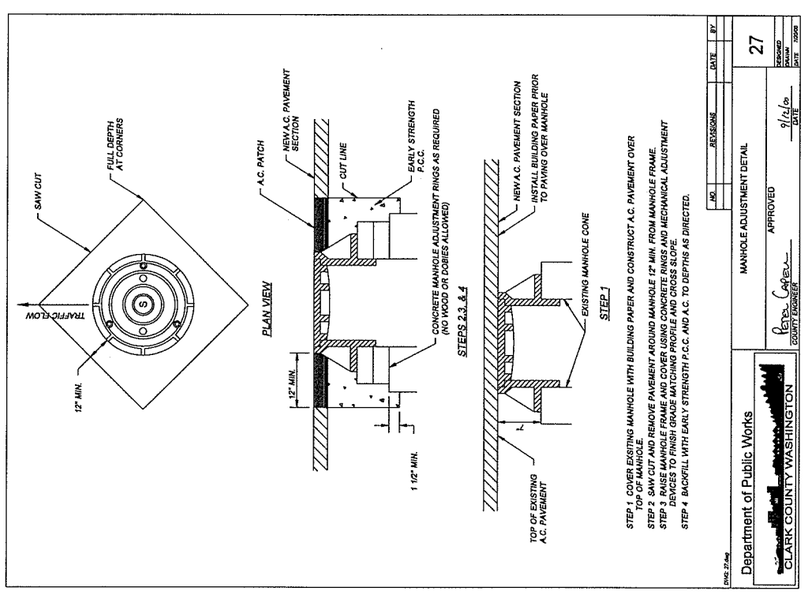


STEP 1 COVER EXISTING MANHOLE WITH BUILDING PAPER AND CONSTRUCT A.C. PAVEMENT OVER TOP OF MANHOLE.
STEP 2 SAW CUT AND REMOVE PAVEMENT AROUND MANHOLE 12" MIN. FROM MANHOLE FRAME.
STEP 3 RAISE MANHOLE FRAME AND COVER USING CONCRETE RINGS AND MECHANICAL ADJUSTMENT DEVICES TO FINISH GRADE MATCHING PROFILE AND CROSS SLOPE.
STEP 4 BACKFILL WITH EARLY STRENGTH P.C.C. AND A.C. TO DEPTHS AS DIRECTED.

| NO. | REVISIONS | DATE | BY |
|---|---|---|---|
| | | | |

DWG: 27.dwg

Department of Public Works
[redacted]
CLARK COUNTY WASHINGTON

MANHOLE ADJUSTMENT DETAIL

STANDARD 27

APPROVED
Peter Capen 9/26/06
COUNTY ENGINEER — DATE

DESIGNED
DRAWN
DATE 10/02/02

| | | | |
|---|---|---|---|
| DESIGNED | PW | | |
| DRAWN | PW | | |
| CRP | 321222 | | |
| HOR. | N/A | | |
| VERT. | N/A | | |
| DATE | 10/03 | | |
| DWG: | R03 | | |
| SHEET | 14 | OF | 36 |

CALL 48 HOURS BEFORE YOU DIG
1-800-553-4344
"It's the Law"
NORTHWEST UTILITIES NOTIFICATION CENTER

DESIGN & ENGINEERING DIVISION
DESIGN SECTION

BETTS BRIDGE #26 REPLACEMENT (SALMON CREEK AVE.)
CURB & SIDEWALK DETAILS

50% PLANS
PRELIMINARY

proud past, promising future
CLARK COUNTY WASHINGTON

PLOT13

## WATERS EDGE CONDOMINIUMS
SEE SHEET PP2

SALMON CREEK AVENUE 61+24.30 = WATER EDGE CONDOMINIUMS APPROACH 10+00
ELEV 110.89

BACK OF SIDEWALK (29.5' LT)
ELEV 111.48

WATER EDGE CONDOMINIUMS APPROACH 10+69
MATCH EXISTING
ELEV 109.48

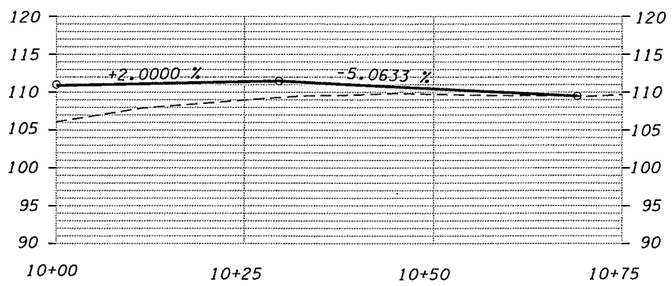


## BUCHANAN DRIVEWAY
SEE SHEET PP1

SALMON CREEK AVENUE 55+80.00 = BUCHANAN DRIVEWAY 10+00
ELEV 115.27

BACK OF SIDEWALK (29.5' LT)
ELEV 115.80

BUCHANAN DRIVEWAY 11+06
MATCH EXISTING
ELEV 104.30

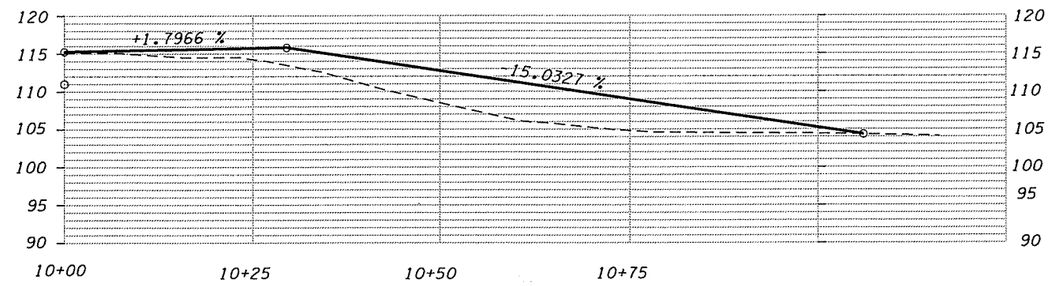


## IVAN DRIVEWAY
SEE SHEET PP1

SALMON CREEK AVENUE 57+16.08 = IVAN DRIVEWAY 10+00
ELEV 111.65

BACK OF SIDEWALK (29.5' LT)
ELEV 112.24

IVAN DRIVEWAY 10+75
MATCH EXISTING
ELEV 105.75

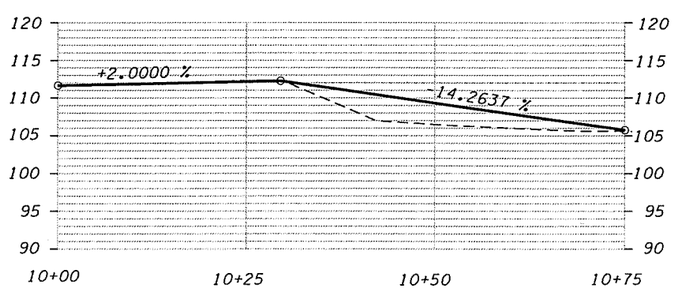


PLOT3

| | |
|---|---|
| DESIGNED | PW |
| DRAWN | PW |
| CRP | 321222 |
| HOR. | N/A |
| VERT. | N/A |
| DATE | 11/03 |
| DWG: | RD4 |
| SHEET | 15 OF 36 |

CALL 48 HOURS BEFORE YOU DIG
1-800-553-4344
"It's the Law"
NORTHWEST UTILITIES NOTIFICATION CENTER

DESIGN & ENGINEERING DIVISION
DESIGN SECTION

BETTS BRIDGE #26 REPLACEMENT (SALMON CREEK AVE.)
APPROACH PROFILES

proud past, promising future
CLARK COUNTY WASHINGTON

WALL NO. 1 *
SEE SHEET PP1

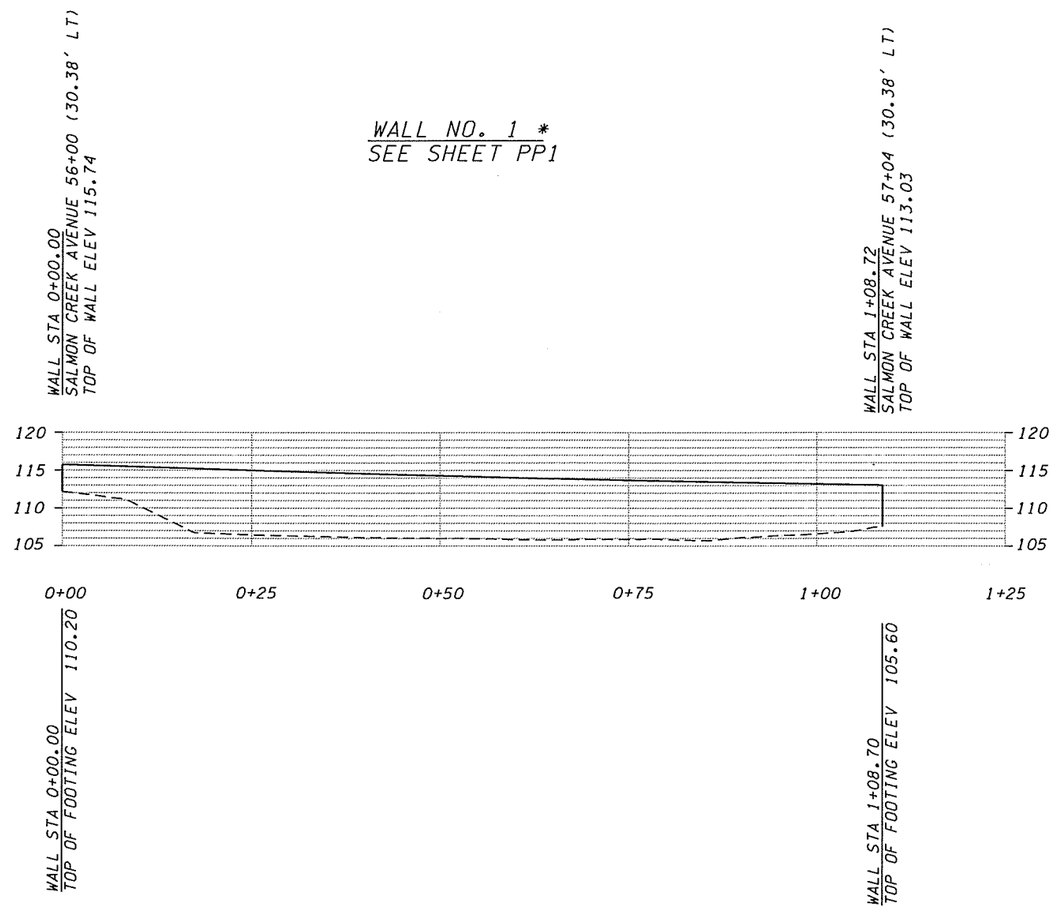


WALL KEY

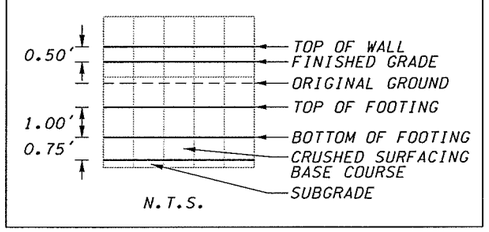


* SEE STANDARD PLAN D-1a

50% PLANS
PRELIMINARY

CALL 48 HOURS BEFORE YOU DIG
1-800-553-4344
"It's the Law"
NORTHWEST UTILITIES NOTIFICATION CENTER

| | |
|---|---|
| DESIGNED | PW |
| DRAWN | PW |
| CRP | 321222 |
| HOR. | 20 |
| VERT. | 20 |
| DATE | 11/03 |
| DWG: | WP1 |
| SHEET | 16 OF 26 |

DESIGN & ENGINEERING DIVISION
DESIGN SECTION

BETTS BRIDGE #26 REPLACEMENT (SALMON CREEK AVE.)
WALL PROFILE

proud past, promising future
CLARK COUNTY
WASHINGTON

PLOT1

WALL STA 0+00.00
SALMON CREEK AVENUE 57+45 (30.38' LT)
TOP OF WALL ELEV 112.04

WALL NO. 2 *
SEE SHEET PP1

WALL STA 1+21.25
SALMON CREEK AVENUE 58+66.25 (30.38' LT)
TOP OF WALL ELEV 112.36




WALL STA 0+00.00
TOP OF FOOTING ELEV 106.55

WALL STA 1+21.25
TOP OF FOOTING ELEV 103.53

50% PLANS
PRELIMINARY

WALL KEY




* SEE STANDARD PLAN D-1a

PLOT2

| | |
|---|---|
| DESIGNED | PW |
| DRAWN | PW |
| CRP | 321222 |
| HOR. | 10 |
| VERT. | 10 |
| DATE | 11/03 |
| DWG: | WP2 |
| SHEET | 17 OF 30 |

CALL 48 HOURS BEFORE YOU DIG
1-800-553-4344
"It's the Law"
NORTHWEST UTILITIES NOTIFICATION CENTER

DESIGN & ENGINEERING DIVISION
DESIGN SECTION

BETTS BRIDGE #26 REPLACEMENT (SALMON CREEK AVE.)
WALL PROFILE

proud past, promising future
CLARK COUNTY
WASHINGTON

WALL NO. 3 *
SEE SHEET PP1

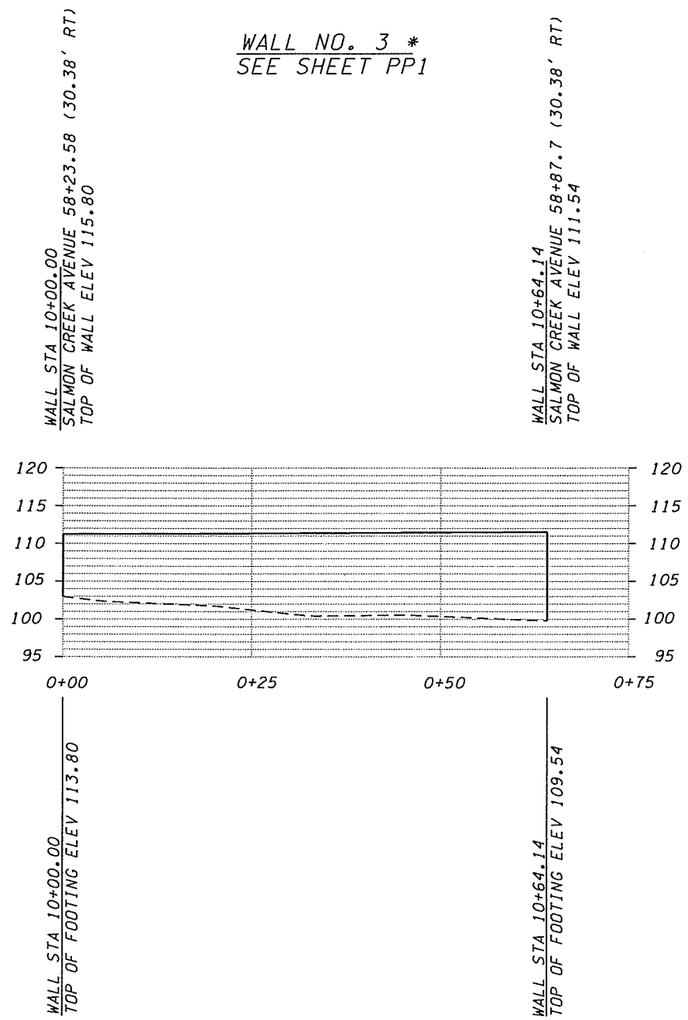


WALL KEY

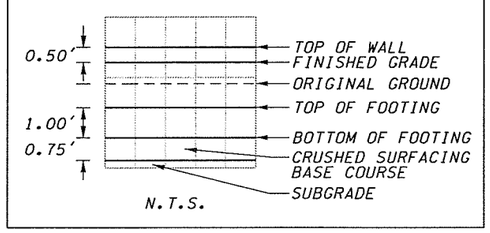


* SEE STANDARD PLAN D-1a

50% PLANS
PRELIMINARY

CALL 48 HOURS BEFORE YOU DIG
1-800-553-4344
"It's the Law"
NORTHWEST UTILITIES NOTIFICATION CENTER

| | |
|---|---|
| DESIGNED | PW |
| DRAWN | PW |
| CRP | 321222 |
| HOR. | N/A |
| VERT. | N/A |
| DATE | 11/03 |
| DWG. | WP3 |
| SHEET | 13 OF 26 |

DESIGN & ENGINEERING DIVISION
DESIGN SECTION

BETTS BRIDGE #26 REPLACEMENT (SALMON CREEK AVE.)
WALL PROFILE

proud past, promising future
CLARK COUNTY
WASHINGTON

PLOT3

WALL NO. 4*
SEE SHEET PP2

WALL STA 0+00.00
SALMON CREEK AVENUE 60+35.50(30.38' RT)
TOP OF WALL ELEV 111.49

WALL STA 1+27.22
SALMON CREEK AVENUE 61+80 (30.38' RT)
TOP OF WALL ELEV 110.80

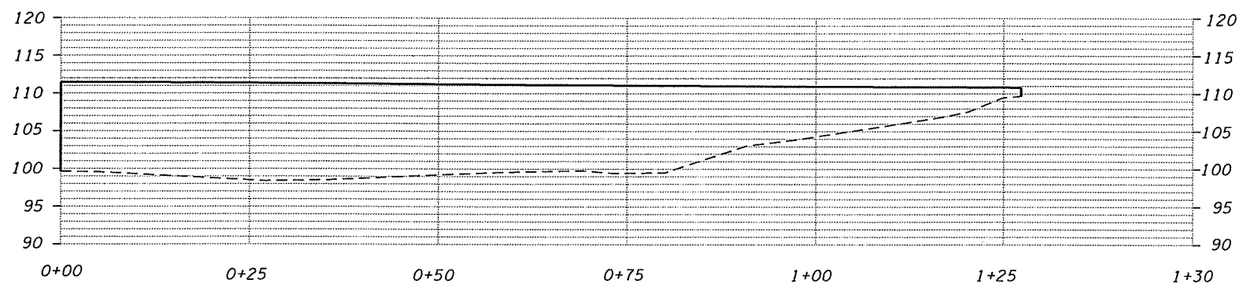


WALL STA 0+00.00
TOP OF FOOTING ELEV 97.64

WALL STA 1+08.30
TOP OF FOOTING ELEV 107.93

WALL KEY

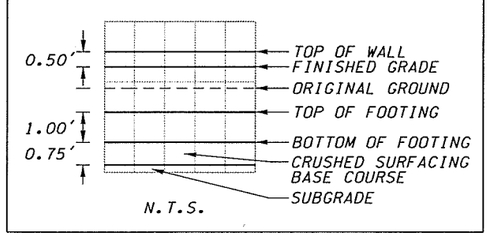


* SEE STANDARD PLAN D-1a

50% PLANS
PRELIMINARY

CALL 48 HOURS BEFORE YOU DIG
1-800-553-4344
"It's the Law"
NORTHWEST UTILITIES NOTIFICATION CENTER

| | |
|---|---|
| DESIGNED | PW |
| DRAWN | PW |
| CRP | 321222 |
| HOR. | 20 |
| VERT. | 20 |
| DATE | 11/03 |
| DWG: | WP4 |
| SHEET | 19 OF 20 |

DESIGN & ENGINEERING DIVISION
DESIGN SECTION

BETTS BRIDGE #26 REPLACEMENT (SALMON CREEK AVE.)
WALL PROFILE

proud past, promising future
CLARK COUNTY
WASHINGTON

PLOT4

WALL NO. 5 *
SEE SHEET PP2




WALL KEY




* SEE STANDARD PLAN D-1a

50% PLANS
PRELIMINARY

CALL 48 HOURS BEFORE YOU DIG
1-800-553-4344
"It's the Law"
NORTHWEST UTILITIES NOTIFICATION CENTER

| | |
|---|---|
| DESIGNED | PW |
| DRAWN | PW |
| CRP | 321222 |
| HOR. | 20 |
| VERT. | 20 |
| DATE | 11/03 |
| DWG: | WP5 |
| SHEET | 20 OF 36 |

DESIGN & ENGINEERING DIVISION
DESIGN SECTION

BETTS BRIDGE #26 REPLACEMENT (SALMON CREEK AVE.)
WALL PROFILE

proud past, promising future
CLARK COUNTY
WASHINGTON

PLOT5

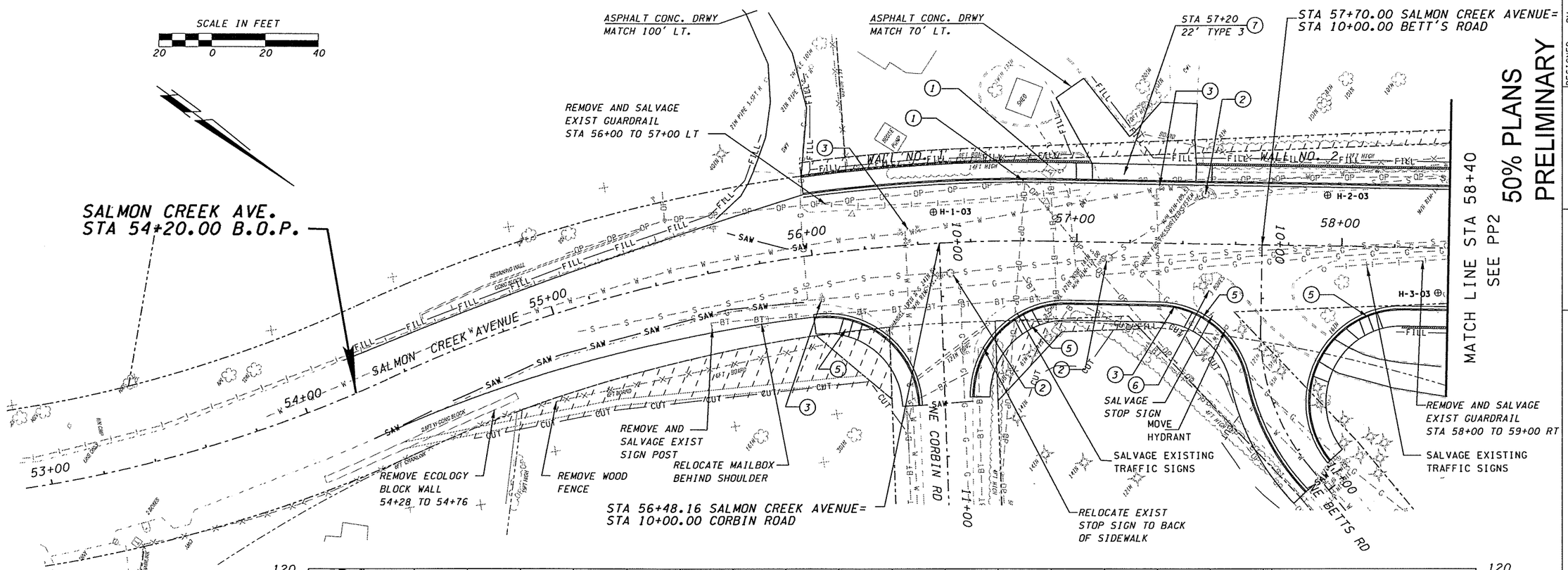


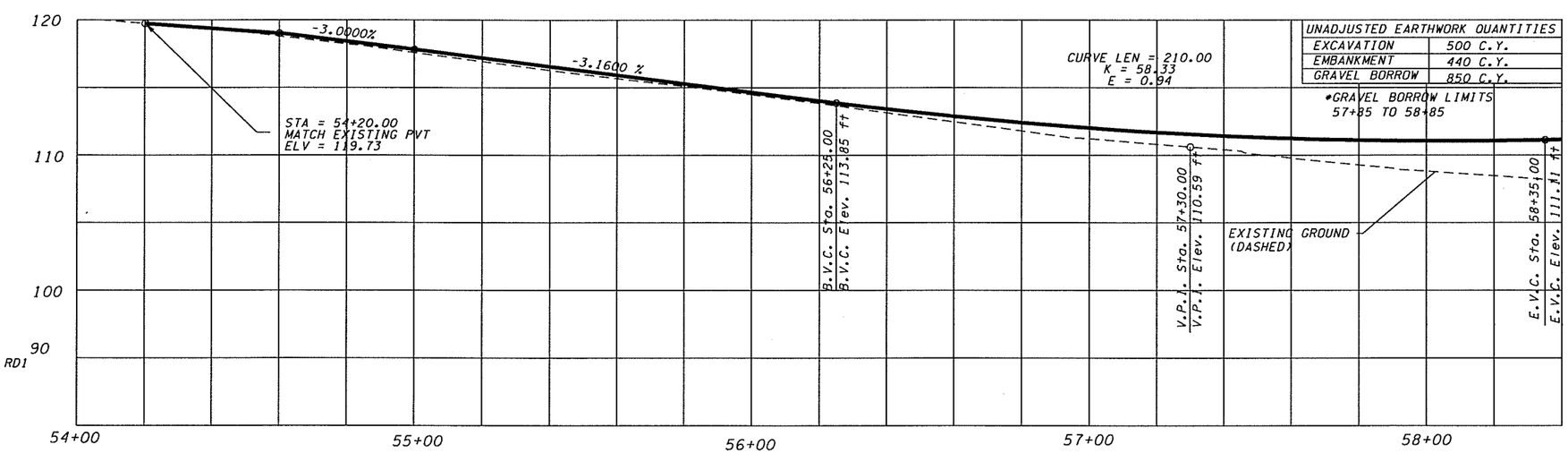


| UNADJUSTED EARTHWORK QUANTITIES | |
|---|---|
| EXCAVATION | 500 C.Y. |
| EMBANKMENT | 440 C.Y. |
| GRAVEL BORROW | 850 C.Y. |

*GRAVEL BORROW LIMITS 57+85 TO 58+85

(1) RELOCATE/REMOVE BY OTHERS
(2) ADJUST MH RIM/CB GRATE TO FG
(3) ADJUST VALVE COVER/METER BOX TO FG
(4) INSTALL TYPE 1 WHEEL CHAIR RAMP, SEE DETAIL 1, SHEET RD2
(5) INSTALL TYPE 3 WHEEL CHAIR RAMP, SEE DETAIL 3, SHEET RD2
(6) RELOCATE MAILBOX BEHIND CURB
(7) SEE DRIVEWAY APPROACH DETAILS, SHEET RD1
(8) RELOCATE EXIST TRAFFIC SIGN TO BACK OF SIDEWALK

NOTES:

REMOVE ALL TREES WITHIN CUT/FILL LINES UNLESS OTHERWISE NOTED (TYPICAL)

UNDERGROUND UTILITY LOCATIONS ARE APPROXIMATE. UTILITY LOCATIONS SHALL BE VERIFIED PRIOR TO CONSTRUCTION.

TREES TO BE REMOVED OUTSIDE OF CUT/FILL LINES SHOWN WITH HEAVIER WEIGHT THAN OTHER TREES

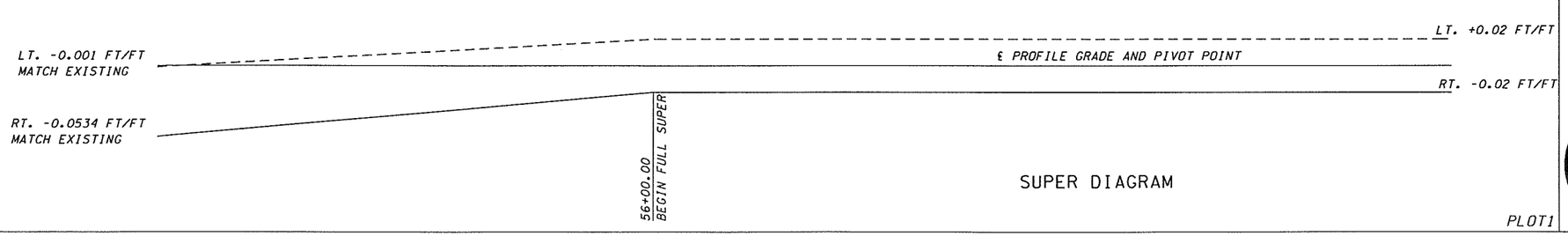


SUPER DIAGRAM

PLOT1

| | |
|---|---|
| DESIGNED | PW |
| DRAWN | PW |
| CRP | 321222 |
| HOR. | 1" = 20' |
| VERT. | 1" = 5' |
| DATE | 11/03 |
| DWG: | PP1 |
| SHEET | 21 OF 36 |

CALL 48 HOURS BEFORE YOU DIG 1-800-553-4344 "It's the Law" NORTHWEST UTILITIES NOTIFICATION CENTER

DESIGN & ENGINEERING DIVISION
DESIGN SECTION

BETTS BRIDGE #26 REPLACEMENT (SALMON CREEK AVE.)
B.O.P. TO STA 58+40

proud past, promising future

CLARK COUNTY WASHINGTON

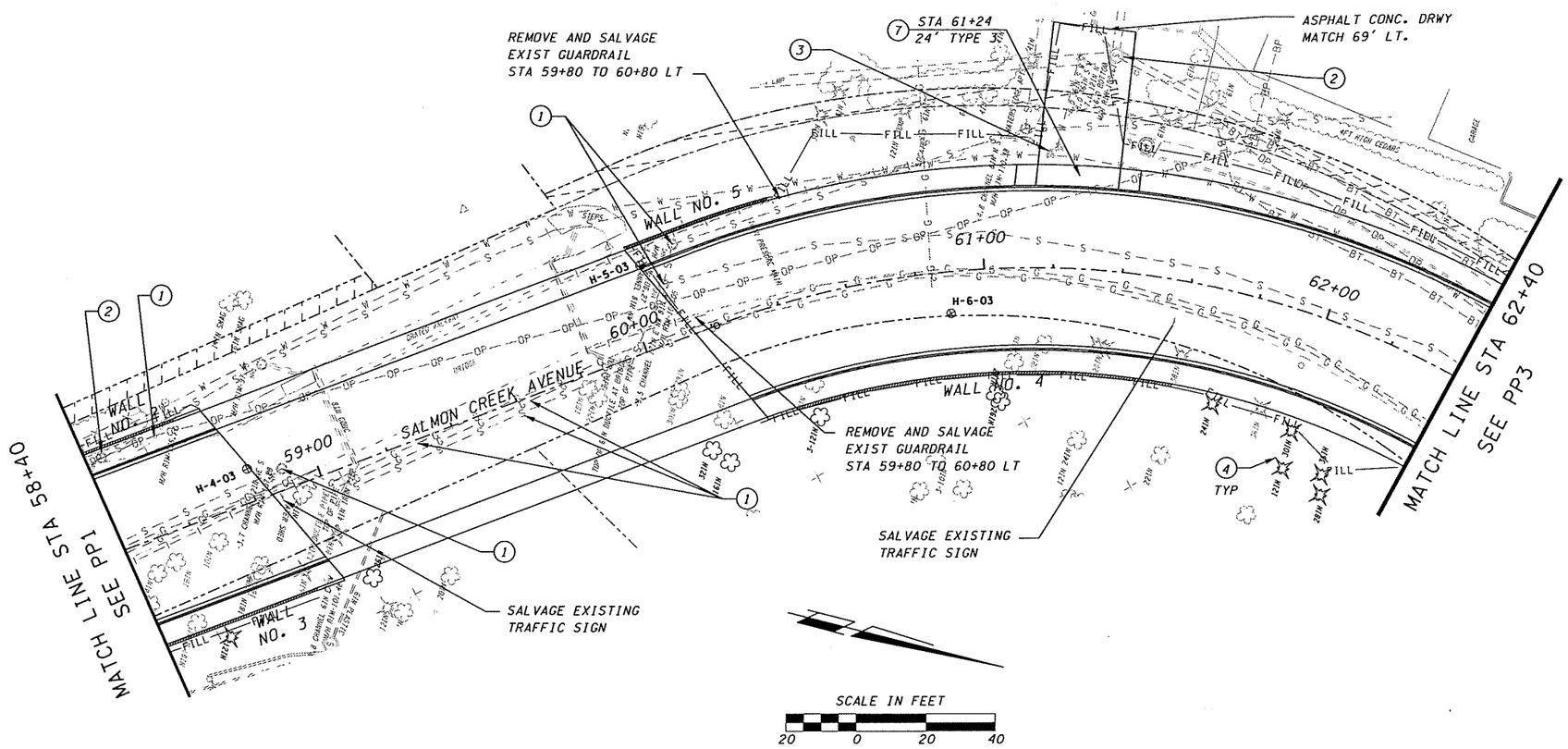


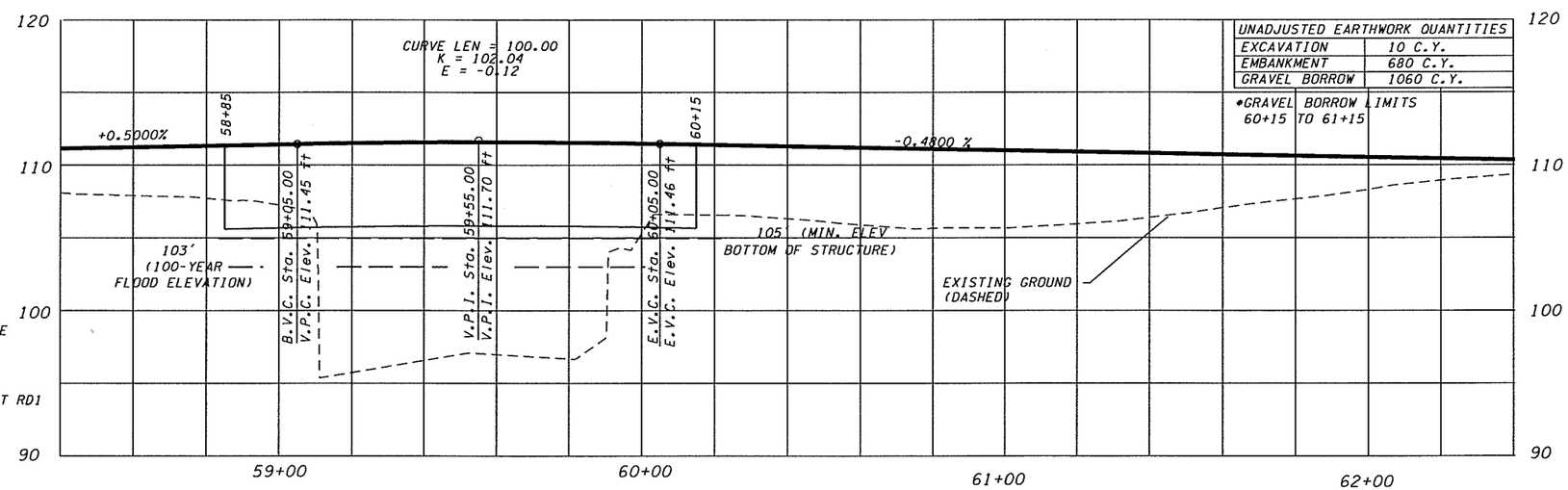


| UNADJUSTED EARTHWORK QUANTITIES | |
|---|---|
| EXCAVATION | 10 C.Y. |
| EMBANKMENT | 680 C.Y. |
| GRAVEL BORROW | 1060 C.Y. |

*GRAVEL BORROW LIMITS
60+15 TO 61+15

1. RELOCATE/REMOVE BY OTHERS
2. ADJUST MH RIM/CB GRATE TO FG
3. ADJUST VALVE COVER/METER BOX TO FG
4. TREE TO BE REMOVED
5. INSTALL TYPE 3 WHEEL CHAIR RAMP, SEE DETAIL 3, SHEET RD2
6. RELOCATE MAILBOX BEHIND CURB
7. SEE DRIVEWAY APPROACH DETAILS, SHEET RD1
8. RELOCATE EXIST TRAFFIC SIGN TO BACK OF SIDEWALK

NOTES:

REMOVE ALL TREES WITHIN CUT/FILL LINES UNLESS OTHERWISE NOTED (TYPICAL)

UNDERGROUND UTILITY LOCATIONS ARE APPROXIMATE. UTILITY LOCATIONS SHALL BE VERIFIED PRIOR TO CONSTRUCTION.

TREES TO BE REMOVED OUTSIDE OF CUT/FILL LINES SHOWN WITH HEAVIER WEIGHT THAN OTHER TREES

SUPER DIAGRAM

50% PLANS
PRELIMINARY

CALL 48 HOURS BEFORE YOU DIG
1-800-553-4344
"It's the Law"
NORTHWEST UTILITIES NOTIFICATION CENTER

| | |
|---|---|
| DESIGNED | PW |
| DRAWN | PW |
| CRP | 321222 |
| HOR. | 1" = 20' |
| VERT. | 1" = 5' |
| DATE | 11/03 |
| DWG: | PP2 |
| SHEET 22 | OF 30 |

DESIGN & ENGINEERING DIVISION
DESIGN SECTION

BETTS BRIDGE #26 REPLACEMENT (SALMON CREEK AVE.)
STA. 58+40 TO STA 62+40

proud past, promising future
CLARK COUNTY
WASHINGTON

PLOT2

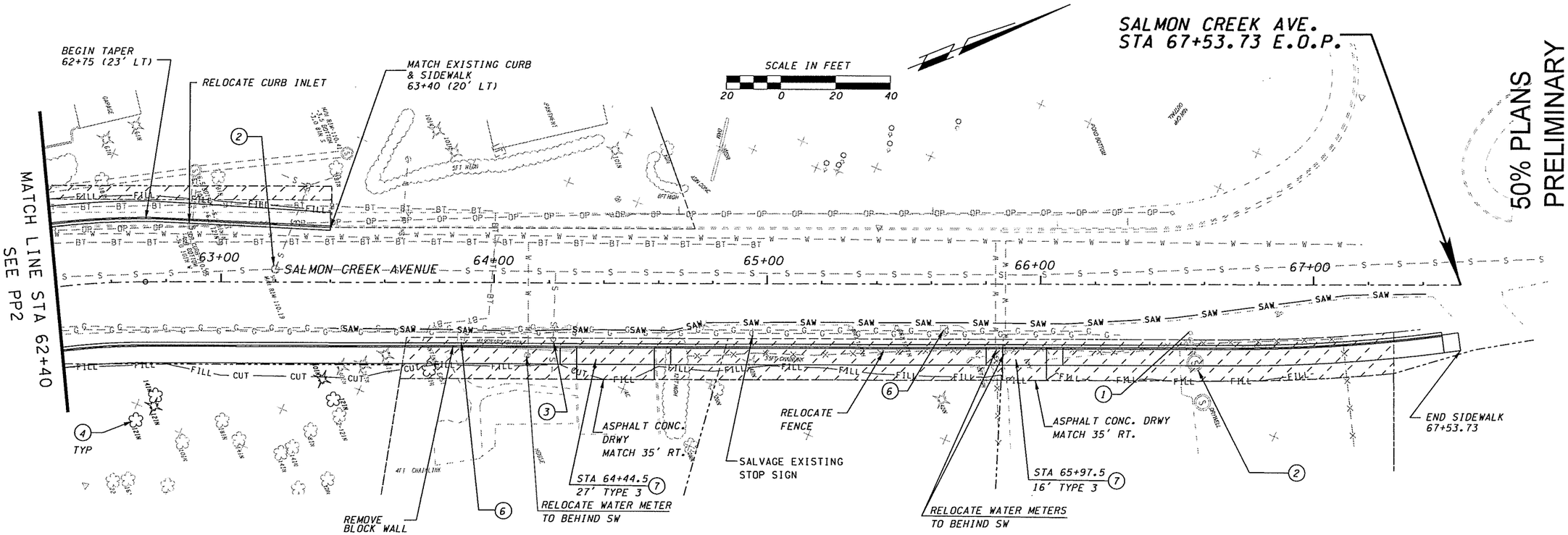


50% PLANS
PRELIMINARY

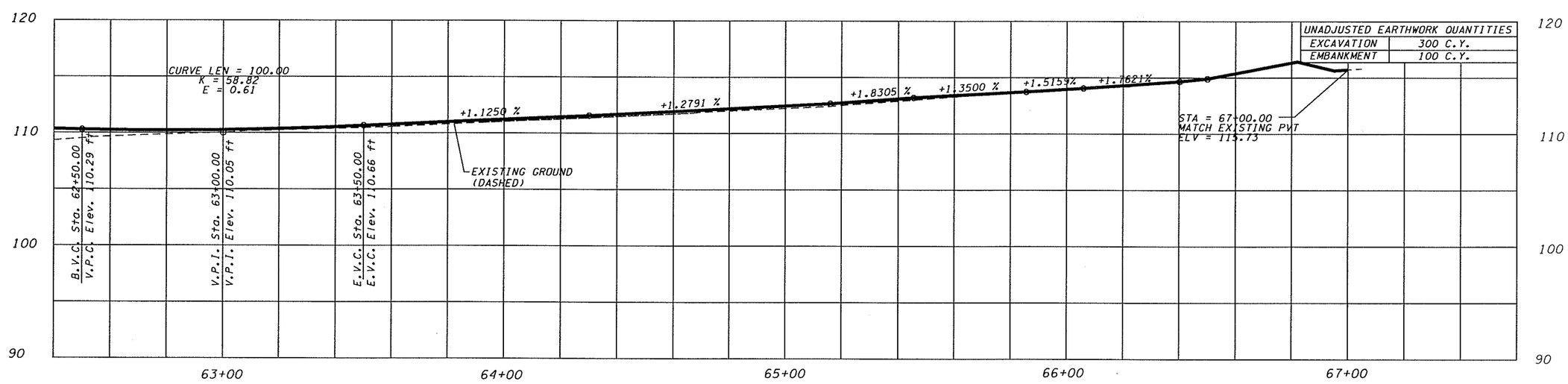


| UNADJUSTED EARTHWORK QUANTITIES | |
|---|---|
| EXCAVATION | 300 C.Y. |
| EMBANKMENT | 100 C.Y. |

LT. +0.02 FT/FT

63+00.00

℄ PROFILE GRADE AND PIVOT POINT

RT. -0.02 FT/FT

RT. -0.02 FT/FT

LT. -0.02 FT/FT

62+50.00
END FULL SUPER

SUPER DIAGRAM

63+40.00

65+85.50
MATCH EXISTING LT

1. RELOCATE/REMOVE BY OTHERS
2. ADJUST MH RIM/CB GRATE TO FG
3. ADJUST VALVE COVER/METER BOX TO FG
4. TREE TO BE REMOVED
5. INSTALL TYPE 3 WHEEL CHAIR RAMP, SEE DETAIL 3, SHEET RD2
6. RELOCATE MAILBOX BEHIND CURB
7. SEE DRIVEWAY APPROACH DETAILS, SHEET RD1
8. RELOCATE EXIST TRAFFIC SIGN TO BACK OF SIDEWALK

NOTES:

REMOVE ALL TREES WITHIN CUT/FILL LINES UNLESS OTHERWISE NOTED (TYPICAL)

UNDERGROUND UTILITY LOCATIONS ARE APPROXIMATE. UTILITY LOCATIONS SHALL BE VERIFIED PRIOR TO CONSTRUCTION.

TREES TO BE REMOVED OUTSIDE OF CUT/FILL LINES SHOWN WITH HEAVIER WEIGHT THAN OTHER TREES

PLOT3

| | |
|---|---|
| DESIGNED | PW |
| DRAWN | PW |
| CRP | 321222 |
| HOR. | 1" = 20' |
| VERT. | 1" = 5' |
| DATE | 11/03 |
| DWG: | PP3 |
| SHEET 23 OF 26 | |

CALL 48 HOURS BEFORE YOU DIG
1-800-553-4344
"It's the Law"
NORTHWEST UTILITIES NOTIFICATION CENTER

DESIGN & ENGINEERING DIVISION
DESIGN SECTION

BETTS BRIDGE #26 REPLACEMENT (SALMON CREEK AVE.)
STA. 62+40 TO STA 66+20

proud past, promising future
CLARK COUNTY
WASHINGTON

STA 56+48.16 SALMON CREEK AVENUE=
STA 10+00.00 CORBIN ROAD

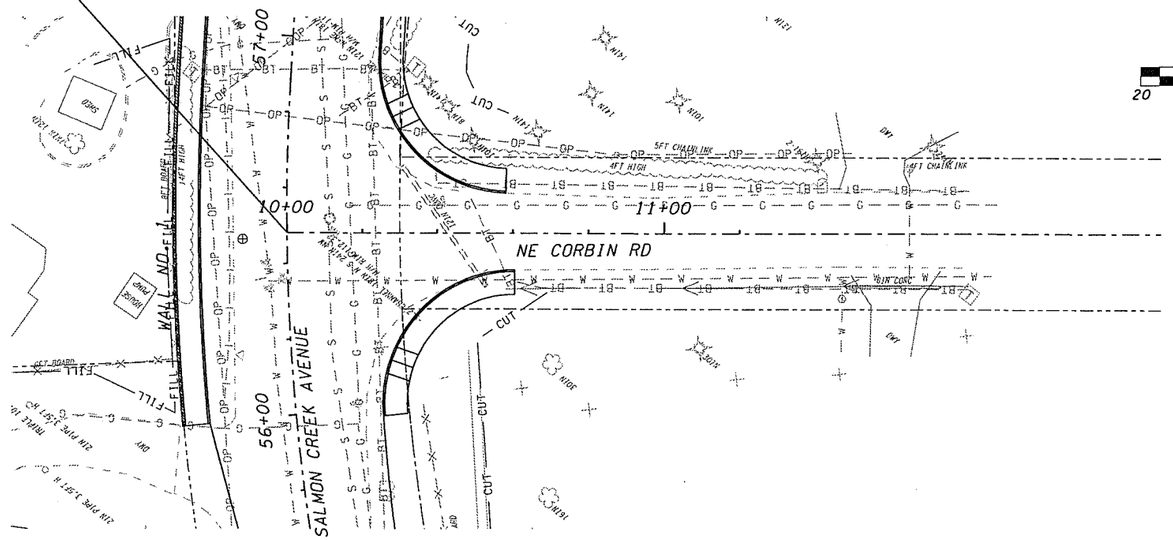


SCALE IN FEET
20 0 20 40

50% PLANS
PRELIMINARY

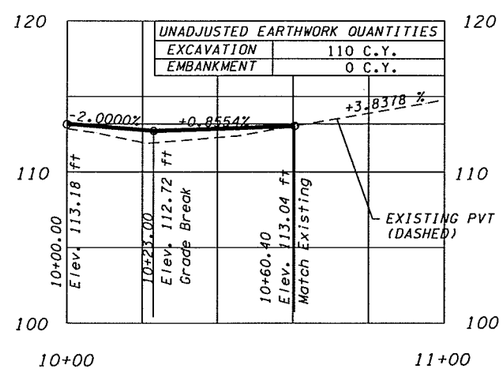


| UNADJUSTED EARTHWORK QUANTITIES | |
|---|---|
| EXCAVATION | 110 C.Y. |
| EMBANKMENT | 0 C.Y. |

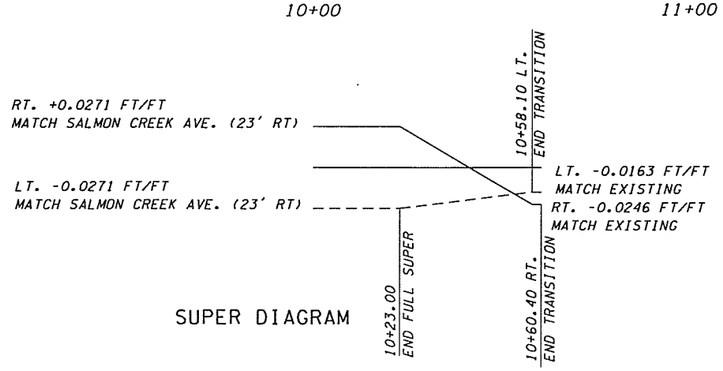


SUPER DIAGRAM

| | |
|---|---|
| DESIGNED | PW |
| DRAWN | PW |
| CRP | 321222 |
| HOR. | 1" = 20' |
| VERT. | 1" = 5' |
| DATE | 11/03 |
| DWG: | PP4 |
| SHEET 24 OF 36 | |

CALL 48 HOURS BEFORE YOU DIG
1-800-553-4344
"It's the Law"
NORTHWEST UTILITIES NOTIFICATION CENTER

DESIGN & ENGINEERING DIVISION
DESIGN SECTION

BETTS BRIDGE #26 REPLACEMENT (SALMON CREEK AVE.)
CORBIN ROAD STA. 10+60.40 TO STA 10+00

proud past, promising future
CLARK COUNTY
WASHINGTON

PLOT4

STA 57+70.00 SALMON CREEK AVENUE=
STA 10+00.00 BETT'S ROAD

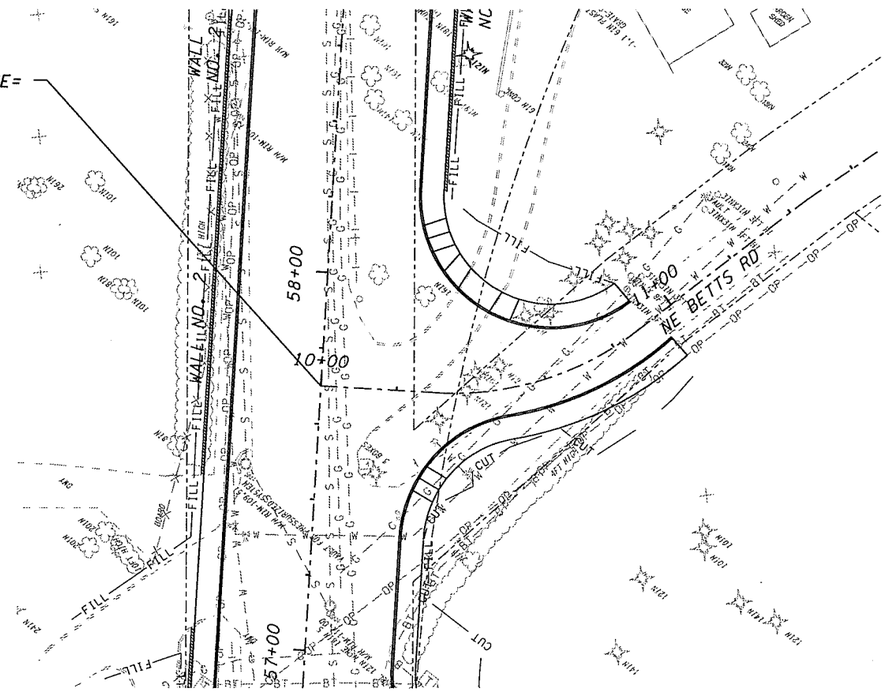


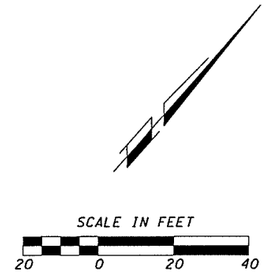


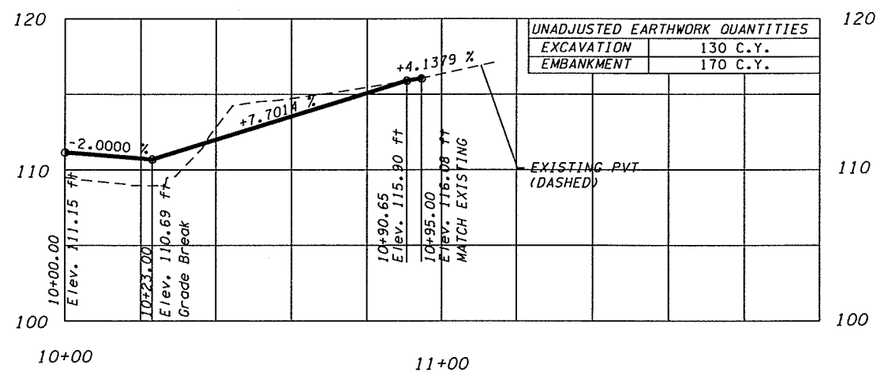


| UNADJUSTED EARTHWORK QUANTITIES | |
|---|---|
| EXCAVATION | 130 C.Y. |
| EMBANKMENT | 170 C.Y. |

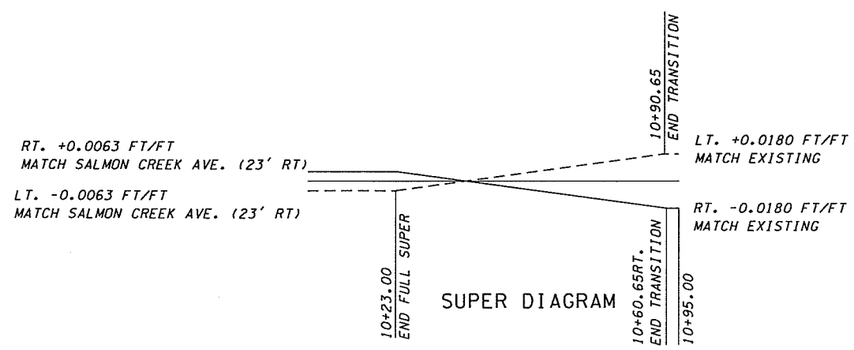


SUPER DIAGRAM

50% PLANS
PRELIMINARY

| | |
|---|---|
| DESIGNED | PW |
| DRAWN | PW |
| CRP | 321222 |
| HOR. | 1" = 20' |
| VERT. | 1" = 5' |
| DATE | 11/03 |
| DWG: | PP5 |
| SHEET | 25 OF 36 |

CALL 48 HOURS BEFORE YOU DIG
1-800-553-4344
"It's the Law"
NORTHWEST UTILITIES NOTIFICATION CENTER

DESIGN & ENGINEERING DIVISION
DESIGN SECTION

BETTS BRIDGE #26 REPLACEMENT (SALMON CREEK AVE.)
BETTS ROAD STA. 10+00 TO STA 10+95

proud past, promising future
CLARK COUNTY
WASHINGTON

PLOT4

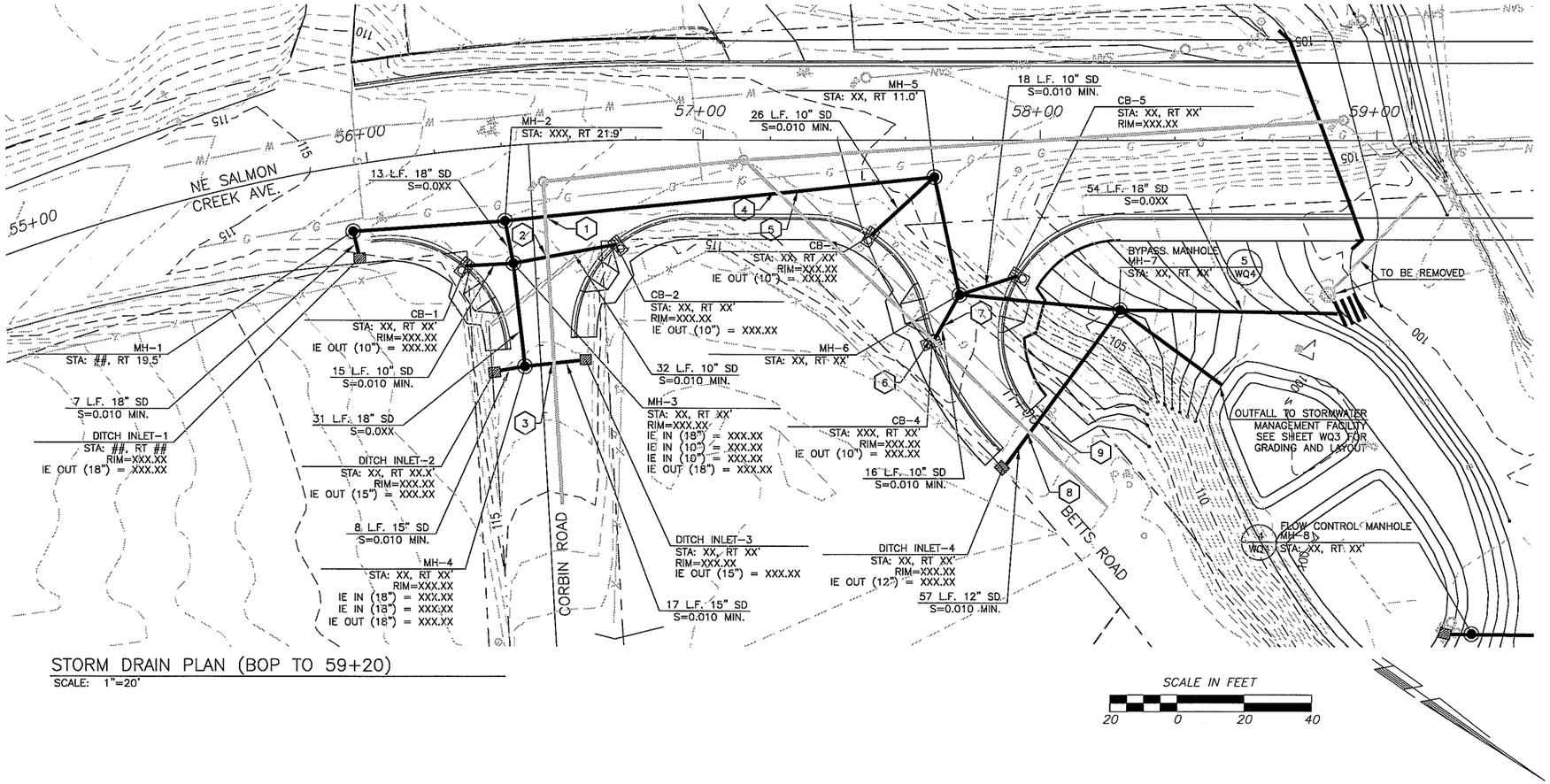


STORM DRAIN PLAN (BOP TO 59+20)
SCALE: 1"=20'

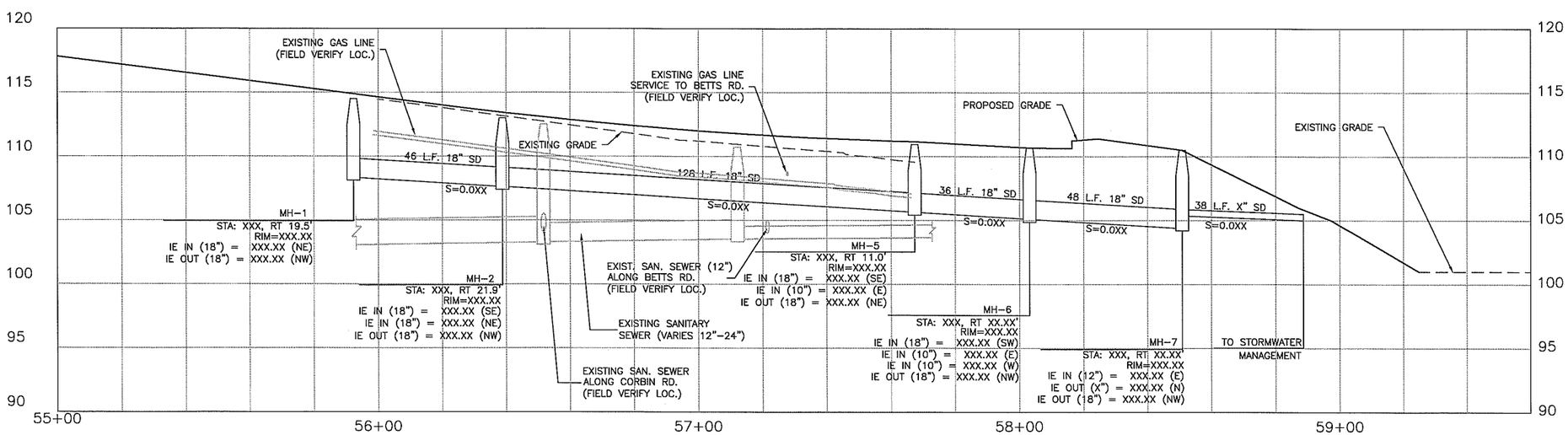


STORM DRAIN PROFILE (BOP TO 59+20)
SCALE: 1"=20'

## UTILITY CROSSINGS:

1. 18" STM & 18" SAN.
2. 10" STM & 18" SAN.
3. 10" STM & 18" SAN.
4. 18" STM & 12" SAN.
5. 18" STM & X" GAS
6. STM CB (FINAL LOCATION TO BE DETERMINED) & 12" SAN.
7. 10" STM & X" GAS
8. 12 " STM & 12" SAN
9. 12" STM & X" GAS

## UTILITY NOTES:

1. EXISTING UTILITIES BASED UPON LOCATES PERFORMED BY WSDOT, AS-BUILTS FROM HAZEL DELL SEWER, FIELD REVIEWS, AND SURVEY DATA PROVIDED BY CLARK COUNTY, WASHINGTON.
2. LOCATE INFORMATION SUPERSEDED AS-BUILT INFORMATION WHERE DISCREPENCIES OCCURRED.
3. NO AS-BUILT INFORMATION WAS AVAILABLE FOR THE BATTLEGROUND SANITARY SEWER LINE.

## UTILITY CONTACTS:

SAN. SEWER – HAZEL DELL SEWER DIST. (360-750-5876)
BATTLEGROUND SEWER (360-342-5060)

GAS – NW NATURAL GAS (800-233-3111)

WATER – CLARK PUBLIC UTILITIES (360-992-8022)

PHONE/CABLE/TV – COMCAST (XXX-XXX-XXXX)
QWEST (360-699-3546,3553)
AT&T (XXX-XXX-XXXX)

ELECTRICAL – CLARK PUBLIC UTILITIES (360-992-8808)

NORTHWEST UTILITY NOTIFICATION CENTER (ONE CALL CENTER) – (800-553-4344)

50% PLANS - PRELIMINARY

| | |
|---|---|
| DESIGNED | MWK |
| DRAWN | MWK |
| CRP | 321222 |
| HOR. | 1" = 20' |
| VERT. | NA |
| DATE | 11-21-03 |
| DWG: | WQ1 |
| SHEET | 26 OF 36 |

CALL 48 HOURS BEFORE YOU DIG
1-800-553-4344
"It's the Law"
NORTHWEST UTILITIES NOTIFICATION CENTER

DESIGN & ENGINEERING DIVISION
DESIGN SECTION

BETTS BRIDGE #26 REPLACEMENT (SALMON CREEK AVE.)
STORMWATER PLAN & PROFILE (BOP TO 59+20)

proud past, promising future
CLARK COUNTY
WASHINGTON

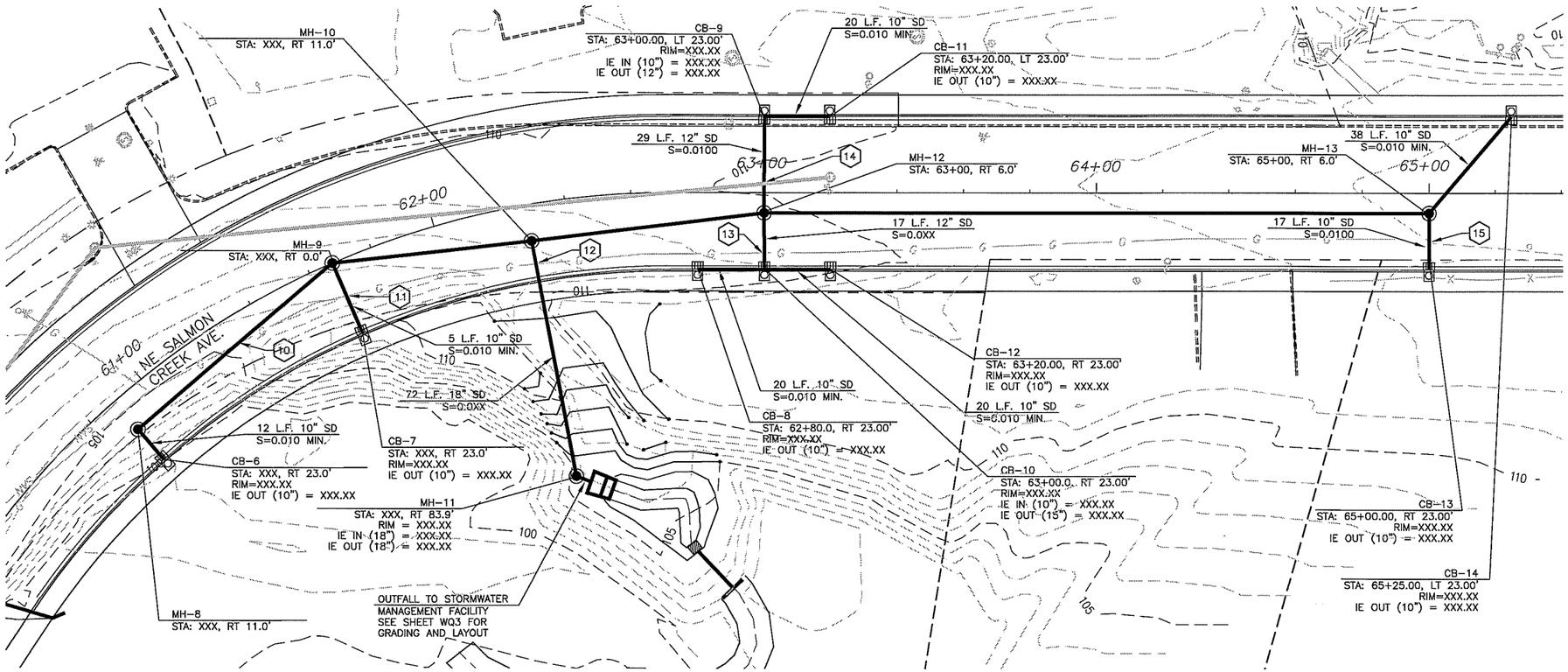


STORM DRAIN PLAN (60+90 TO 65+25)

SCALE: 1"=20'

UTILITY CROSSINGS:

| | |
|---|---|
| 10 | 15" STM & X" GAS |
| 11 | 10" STM & X" GAS |
| 12 | 18" STM & X" GAS |
| 13 | 10" STM & X" GAS |
| 14 | 12" STM & 8" SAN. |
| 15 | 10" STM & X" GAS |

NOTE: SAN. MANHOLE AT STA 63+20, LT. 2.5' MAY HAVE LATERAL INPUTS THAT CONFLICT WITH THE CURRENT STORM DRAIN PIPE LAYOUT.

UTILITY NOTES:

1. EXISTING UTILITIES BASED UPON LOCATES PERFORMED BY WSDOT, AS-BUILTS FROM HAZEL DELL SEWER, FIELD REVIEWS, AND SURVEY DATA PROVIDED BY CLARK COUNTY, WASHINGTON.

2. LOCATE INFORMATION SUPERSEDED AS-BUILT INFORMATION WHERE DISCREPENCIES OCCURRED.

3. NO AS-BUILT INFORMATION WAS AVAILABLE FOR THE BATTLEGROUND SANITARY SEWER LINE.

UTILITY CONTACTS:

SAN. SEWER – HAZEL DELL SEWER DIST. (360-750-5876)
BATTLEGROUND SEWER (360-342-5060)

GAS – NW NATURAL GAS (800-233-3111)

WATER – CLARK PUBLIC UTILITIES (360-992-8022)

PHONE/CABLE/TV – COMCAST (XXX-XXX-XXXX)
QWEST (360-699-3546,3553)
AT&T (XXX-XXX-XXXX)

ELECTRICAL – CLARK PUBLIC UTILITIES (360-992-8808)

NORTHWEST UTILITY NOTIFICATION CENTER (ONE CALL CENTER) – 800-553-4344

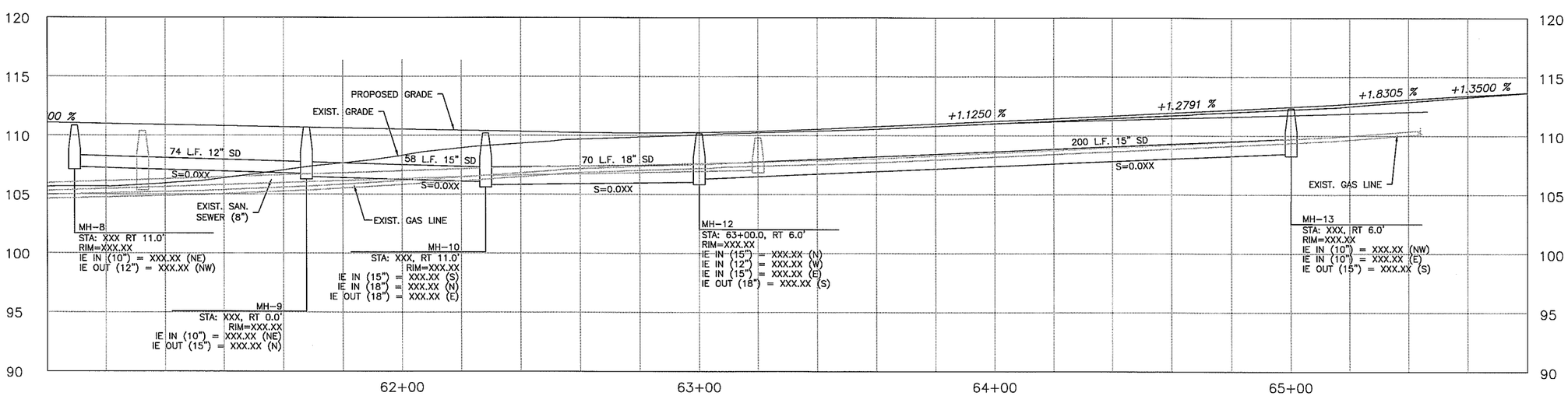


STORM DRAIN PROFILE (60+90 TO 65+25)

SCALE: 1"=20'

50% PLANS - PRELIMINARY

| | |
|---|---|
| DESIGNED | MWK |
| DRAWN | MWK |
| CRP | 321222 |
| HOR. | 1" = 20' |
| VERT. | NA |
| DATE | 11-21-03 |
| DWG: | WQ2 |
| SHEET | 27 OF 36 |

CALL 48 HOURS BEFORE YOU DIG
1-800-553-4344
"It's the Law"
NORTHWEST UTILITIES NOTIFICATION CENTER

DESIGN & ENGINEERING DIVISION
DESIGN SECTION

BETTS BRIDGE #26 REPLACEMENT (SALMON CREEK AVE.)
STORMWATER PLAN & PROFILE (60+90 TO 65+25)

proud past, promising future
CLARK COUNTY
WASHINGTON

STORMWATER MANAGEMENT FACILITIES

SCALE: 1"=20'

50% PLANS - PRELIMINARY

| | |
|---|---|
| DESIGNED | ASZ |
| DRAWN | ASZ |
| CRP | 321222 |
| HOR. | 1"=20' |
| VERT. | NA |
| DATE | 11-21-03 |
| DWG: | WQ3 |
| SHEET | 28 OF 36 |

CALL 48 HOURS BEFORE YOU DIG 1-800-553-4344 "It's the Law" NORTHWEST UTILITIES NOTIFICATION CENTER

DESIGN & ENGINEERING DIVISION
DESIGN SECTION

BETTS BRIDGE #26 REPLACEMENT (SALMON CREEK AVE.)
STORMWATER MANAGEMENT FACILITIES

proud past, promising future

CLARK COUNTY WASHINGTON

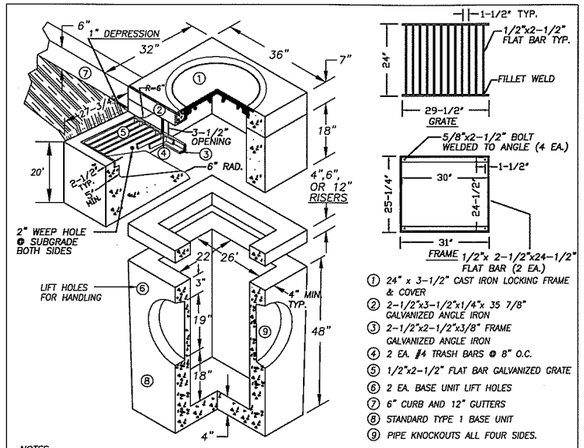


1. 24" x 3-1/2" CAST IRON LOCKING FRAME & COVER
2. 2-1/2"x3-1/2"x1/4"x 35 7/8" GALVANIZED ANGLE IRON
3. 2-1/2"x2-1/2"x3/8" FRAME GALVANIZED ANGLE IRON
4. 2 EA. #4 TRASH BARS @ 8" O.C.
5. 1/2"x2-1/2" FLAT BAR GALVANIZED GRATE
6. 2 EA. BASE UNIT LIFT HOLES
7. 6" CURB AND 12" GUTTERS
8. STANDARD TYPE 1 BASE UNIT
9. PIPE KNOCKOUTS ALL FOUR SIDES.

NOTES

1. COMBINATION CURB INLET TO BE CONSTRUCTED IN ACCORDANCE WITH ASTM C478 & C890 UNLESS SHOWN ON PLANS OR NOTED IN STANDARD SPECIFICATIONS.
2. REINFORCING FOR INLET UNIT, 3 EA. #4 HORZONTAL BARS; REINFORCING FOR TOP UNIT, 2 EA. #3 HORZONTAL BARS; REINFORCING FOR INLET SLOPED BASE, 4x4 MESH.
3. ALL REBAR TO MEET ASTM A615 GRADE 60.
4. AS AN ACCEPTABLE ALTERNATIVE TO REBAR, WELDED WIRE FABRIC HAVING A MIN. AREA OF 0.12 SQAURE INCHES PER FOOT MAY BE USED. WELDED WIRE FABRIC SHALL COMPLY TO ASTM A497. WIRE FABRIC SHALL NOT BE PLACED IN KNOCKOUTS.
5. ALL REINFORCED CAST-IN-PLACE CONCRETE SHALL BE CLASS 4,000.
6. PRECAST BASES SHALL BE FURNISHED WITH CUTOUTS OR KNOCKOUTS. KNOCKOUTS SHALL HAVE A WALL THICKNESS OF 2" MIN. ALL PIPE SHALL BE INSTALLED IN FACTORY PROVIDED KNOCKOUTS. UNUSED KNOCKOUTS NEED NOT BE GROUTED IF WALL IS LEFT INTACT.
7. KNOCKOUTS OR CUTOUT HOLE SIZE IS EQUAL TO PIPE OUTER DIAM. PLUS INLET WALL THICKNESS.
8. ROUND KNOCKOUTS MAY BE ON ALL 4 SIDES WITH MAX. DIAM. OF 17".
9. THE MAX. DEPTH FROM THE FINISHED GRADE TO THE PIPE INVERT IS 5'-0".
10. ANY PROTUDING ENDS OF PIPES SHALL BE TRIMMED FLUSH WITH THE INSIDE WALLS AND GROUTED TO THE SATISFACTION OF ENGINEER.
11. GRATE TO HAVE 1" DEPRESSION AT GUTTER INLET WITH GUTTER TO BE TAPERED DOWN TO INLET.
12. INSTALL REMOVABLE APWA TYPE 60A TRAP OR EQUAL, SEE STD. PLAN D2.1.
13. CONTRACTOR SHALL HAVE THE OPTION OF FURNISHING PRECAST OR CAST-IN-PLACE INLET STRUCTURES, UNLESS SPECIFIED.

| NO. | REVISIONS | DATE | BY |
|---|---|---|---|

DWG: D3-0.DWG

Department of Public Works
CLARK COUNTY WASHINGTON
proud past, promising future

STANDARD TYPE 1 COMBINATION CURB INLET
APPROVED
COUNTY ENGINEER DATE

STANDARD D3.0
PLAN No.
DESIGNED SCH
DRAWN SCH
DATE 09/09/02

## 1 COMBINATION CURB INLET
SCALE: NTS

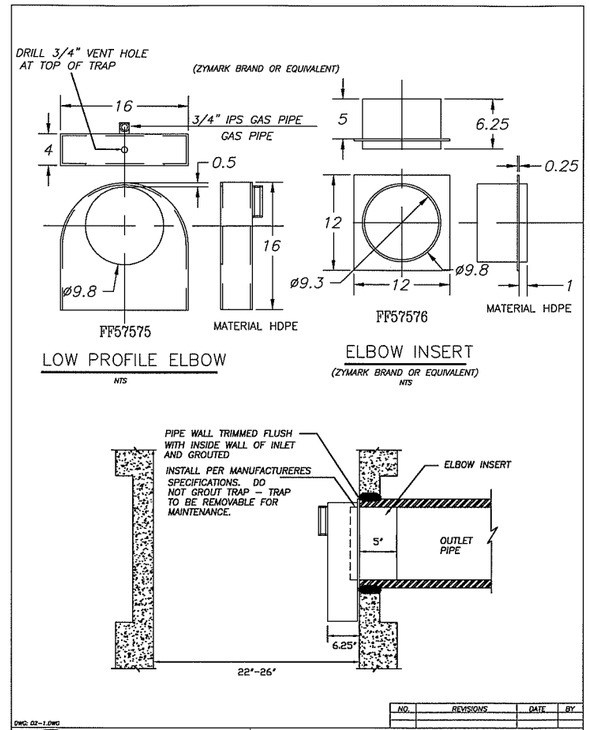


| NO. | REVISIONS | DATE | BY |
|---|---|---|---|

DWG: D2-1.DWG

Department of Public Works
CLARK COUNTY WASHINGTON
proud past, promising future

CATCH BASIN ZYMARK BRAND TRAP
APPROVED
COUNTY ENGINEER DATE

STANDARD D2.1
PLAN No.
DESIGNED SCH
DRAWN SCH
DATE 09/23/02

## 2 CATCH BASIN TRAP
SCALE: NTS

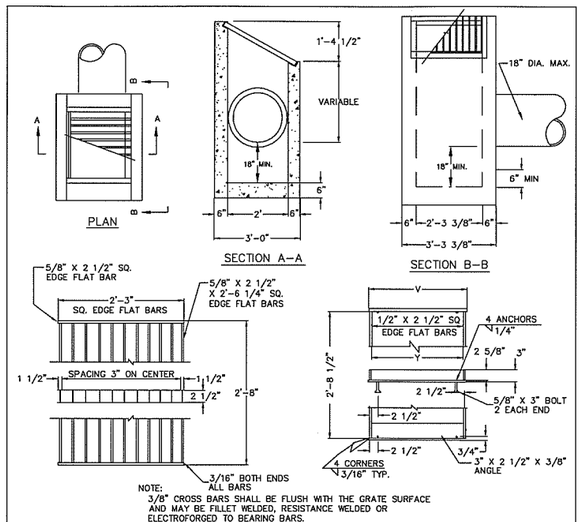


NOTE:
3/8" CROSS BARS SHALL BE FLUSH WITH THE GRATE SURFACE AND MAY BE FILLET WELDED, RESISTANCE WELDED OR ELECTROFORGED TO BEARING BARS.

DITCH INLET FRAME

| INLET TYPE | V | Y | Y1 | NO. OF BARS | TYPE |
|---|---|---|---|---|---|
| D | 2'-4 3/4" | 2'-3 3/8" | 2'-3" | 9 | 1 |

NOTES:

1. DITCH INLET CONSTRUCTION IN ACCORDANCE WITH ASTM C-478
2. CATCH BASIN, FRAME, AND GRATES SHALL BE FLAT BAR STEEL OR APPROVED EQUAL.
3. INSIDE FRAME DIMENSIONS: 2'-3 3/8"x 2'-8 1/2"".
4. INSTALL 8" OF 3/4" COMPACTED BASE MATERIAL.
5. PRECAST INLET SHALL HAVE 5" MIN. WALL THICKNESS, WITH REINFORCEMENT TO BE REBAR MEETING ASTM A615 GRADE 60 OR WELDED WIRE MEETING ASTM A497.

| NO. | REVISIONS | DATE | BY |
|---|---|---|---|

DWG: D6.DWG

Department of Public Works
CLARK COUNTY WASHINGTON
proud past, promising future

DITCH INLET
APPROVED
COUNTY ENGINEER DATE

STANDARD D6
PLAN No.
DESIGNED SCH
DRAWN SCH
DATE 09/17/02

## 3 DITCH INLET
SCALE: NTS

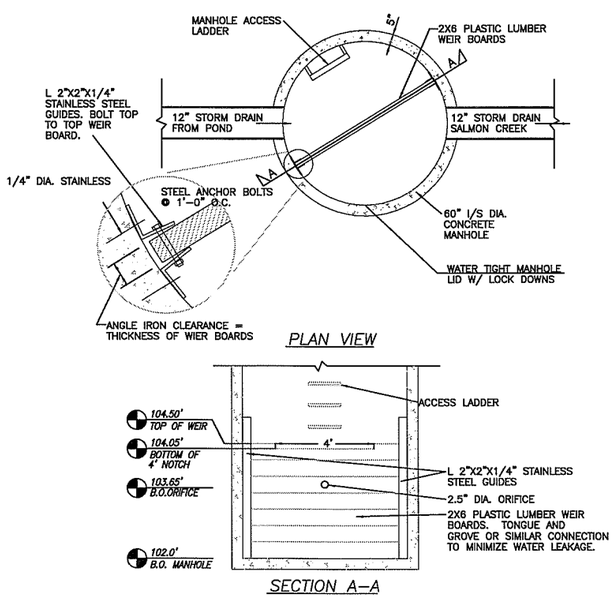


## 4 FLOW CONTROL MANHOLE
SCALE: NTS

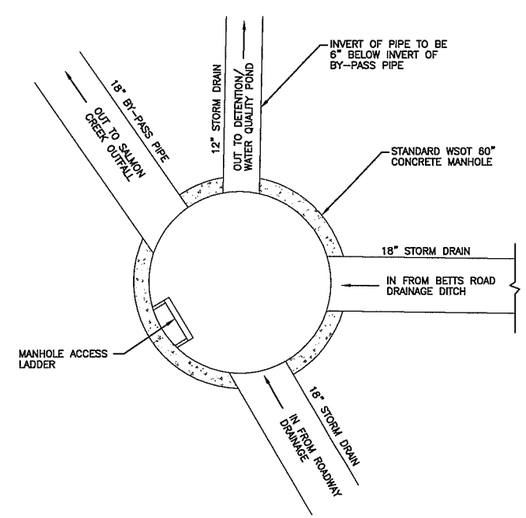


## 5 BY-PASS MANHOLE
SCALE: NTS

50% PLANS - PRELIMINARY

| | |
|---|---|
| DESIGNED | ASZ |
| DRAWN | ASZ |
| CRP | 321222 |
| HOR. | NA |
| VERT. | NA |
| DATE | 11-21-03 |
| DWG: | WQ4 |
| SHEET | 29 OF 36 |

CALL 48 HOURS BEFORE YOU DIG 1-800-553-4344 "It's the Law" NORTHWEST UTILITIES NOTIFICATION CENTER

DESIGN & ENGINEERING DIVISION
DESIGN SECTION

BETTS BRIDGE #26 REPLACEMENT (SALMON CREEK AVE.)
STORMWATER DETAILS - SHEET 1

proud past, promising future
CLARK COUNTY WASHINGTON

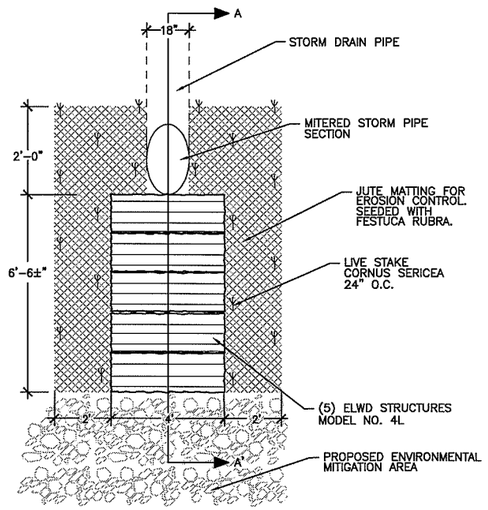


PLAN VIEW

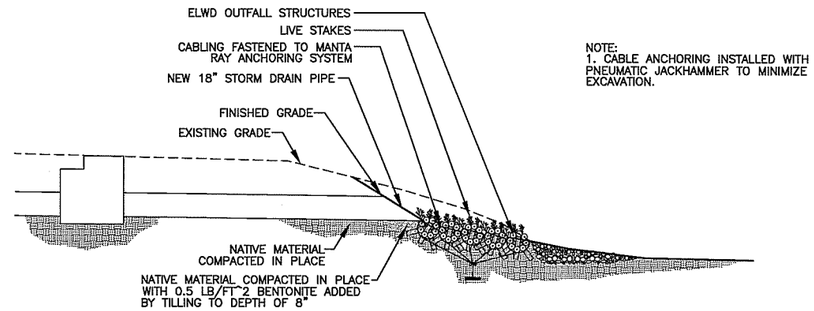


NOTE:
1. CABLE ANCHORING INSTALLED WITH PNEUMATIC JACKHAMMER TO MINIMIZE EXCAVATION.

SECTION A–A'

1 ENGINEERED LARGE WOODY DEBRIS OUTFALL

SCALE: NTS

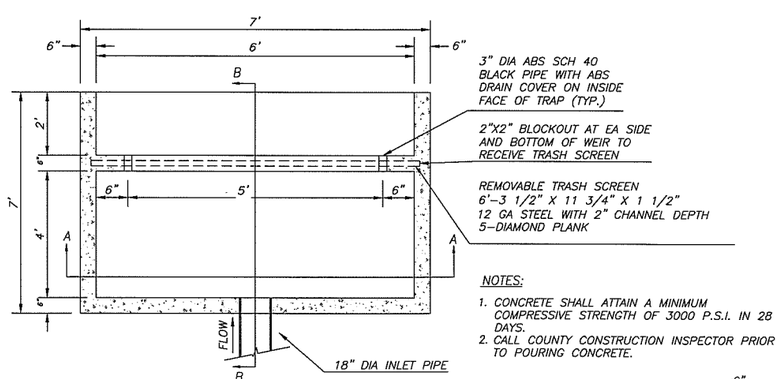


NOTES:
1. CONCRETE SHALL ATTAIN A MINIMUM COMPRESSIVE STRENGTH OF 3000 P.S.I. IN 28 DAYS.
2. CALL COUNTY CONSTRUCTION INSPECTOR PRIOR TO POURING CONCRETE.

PLAN

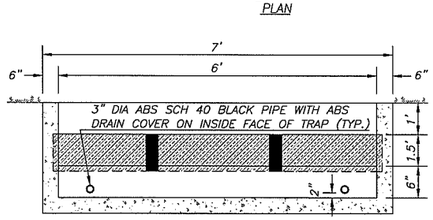


SECTION A–A

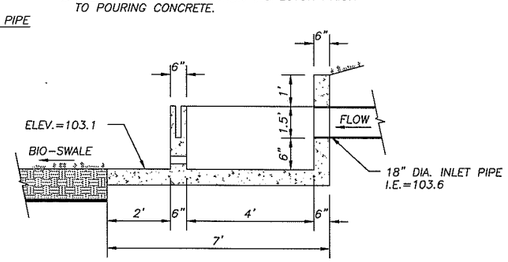


SECTION B–B

3 CONCRETE SETTLEMENT BASIN WITH ENERGY DISSAPATOR

SCALE: NTS

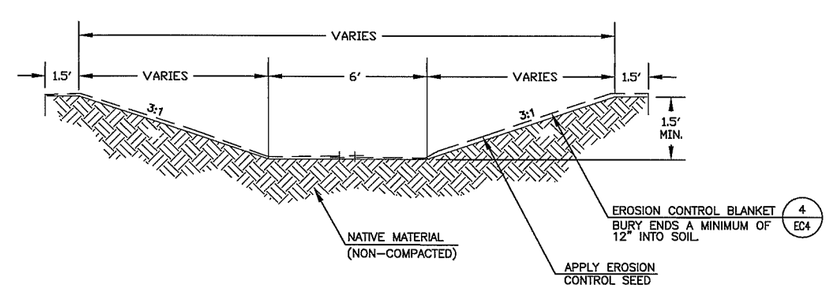


4 BIOFILTRATION SWALE

SCALE: NTS

50% PLANS - PRELIMINARY

| | |
|---|---|
| DESIGNED | ASZ |
| DRAWN | ASZ |
| CRP | 321222 |
| HOR. | NA |
| VERT. | NA |
| DATE | 11-21-03 |
| DWG. | WQ5 |
| SHEET | 30 OF 36 |

CALL 48 HOURS BEFORE YOU DIG 1-800-553-4344 "It's the Law" NORTHWEST UTILITIES NOTIFICATION CENTER

DESIGN & ENGINEERING DIVISION
DESIGN SECTION

BETTS BRIDGE #26 REPLACEMENT (SALMON CREEK AVE.)
STORMWATER DETAILS – SHEET 2

proud past, promising future

CLARK COUNTY WASHINGTON

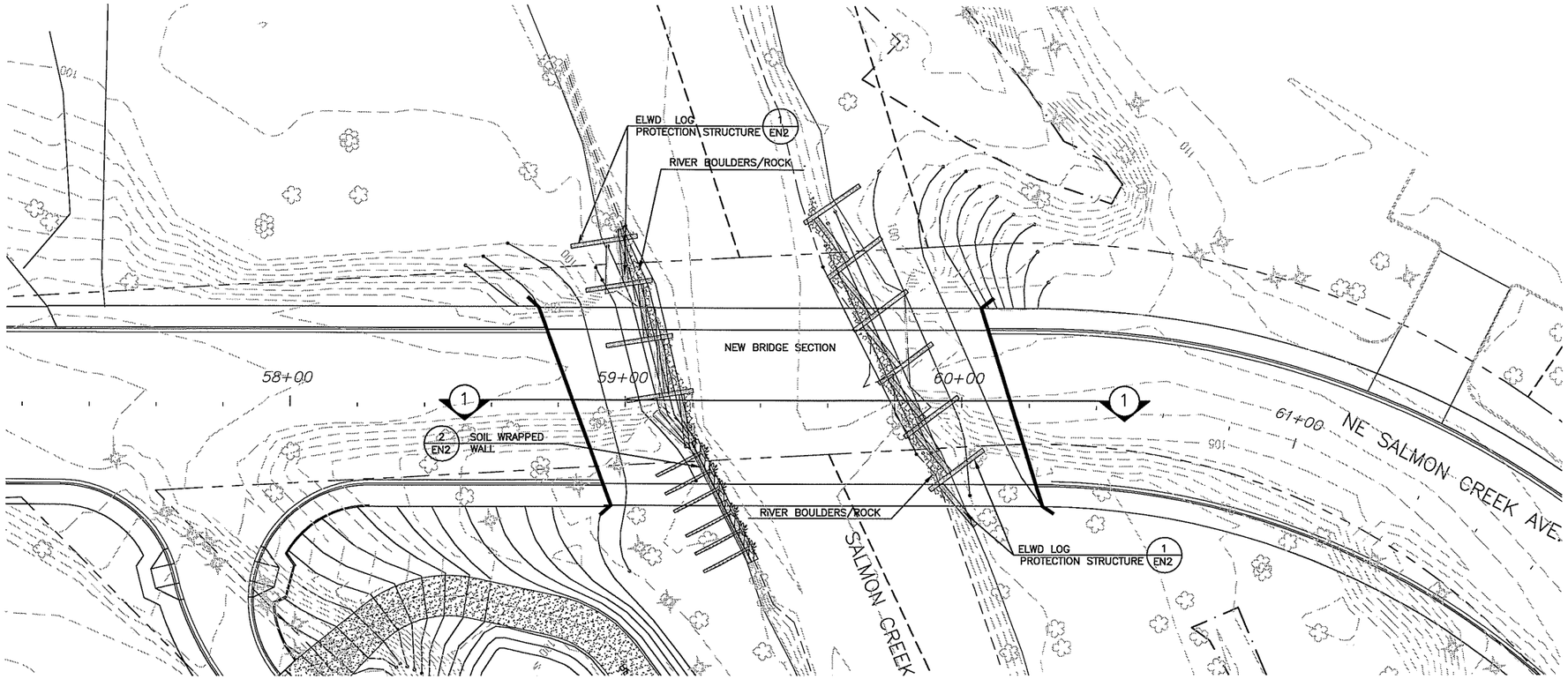


BANK RESTORATION & STABILIZATION PLAN
SCALE: 1"=20'

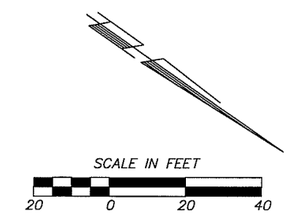


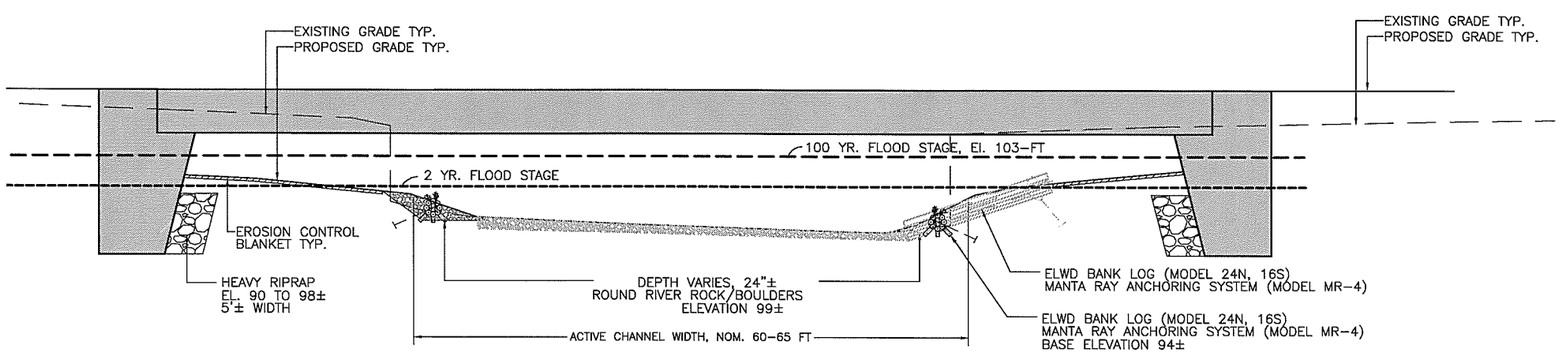


1 BANK STABILIZATION – SECTION AT BRIDGE
SCALE: 1"=10'

NOTES

1. SEE SPECIFICATIONS FOR ROUND RIVER ROCK/BOULDER INFORMATION.
2. SEE SPECIFICATIONS FOR SOIL CONDITIONER.
3. SEE SHEET EC1 EROSION CONTROL PLAN FOR THE EXTENTS OF EROSION CONTROL BLANKET.

*CONSTRUCTION SEQUENCE FOR BANK PROTECTION AND ENHANCEMENT*

1. ISOLATE ACTIVE CONSTRUCTION AREA FROM SALMON CREEK AND ITS ASSOCIATED RIPARIAN AREA USING APPROVED METHODS. THE CONTRACTOR SHALL SUBMIT A DEWATERING AND ISOLATION PLAN FOR APPROVAL.

2. INSTALL TEMPORARY EROSION CONTROL MEASURES (SILT FENCES, STRAW WATTLES, ETC.) AS SHOWN ON CONSTRUCTION PLANS AND DETAILS, TO ISOLATE INDIVIDUAL WORK AREAS AS EXCAVATION PROGRESSES. REFER TO EC1–EC4 FOR MINIMUM EROSION CONTROL REQUIREMENTS

3. IF CRANE PAD IS TO BE CONSTRUCTED, INSTALL ADDITIONAL EROSION CONTROL MEASURES AS NECESSARY.

4. PLACE RIPRAP MATERIAL AT THE BRIDGE ABUTMENTS AS SHOWN IN COORDINATION WITH THE CONSTRUCTION OF THE ABUTMENTS.

5. CONSTRUCT NEW CHANNEL BANKS TO THE LINES AND GRADES SHOWN. ADD ENGINEERED WOODY DEBRIS STRUCTURES AND CLEAN ROCK/BOULDERS TO STREAM BANKS FOR ADDITIONAL PROTECTION AND HABITAT ENHANCEMENT, ACCORDING TO PLANS AND SPECIFICATIONS.

6. COMPACT THE CHANNEL BANK PER SPECIFICATIONS.

7. REFER TO PLANTING PLANS AND SPECIFICATIONS FOR DIRECTION ON SOIL CONDITIONER AND PLANTING.

8. REFER TO EROSION CONTROL PLANS AND SPECIFICATIONS FOR DIRECTION ON EROSION CONTROL MEASURES TO BE IMPLEMENTED AND/OR INSTALLED.

*SEE SHEETS XXX THROUGH XXX FOR DETAILED STAGING PLAN FOR BRIDGE CONSTRUCTION. UPON WRITTEN APPROVAL FROM THE PROJECT MANGER, THE CONTRACTOR MAY MODIFY THE CONSTRUCTION SEQUENCE ABOVE TO MEET SITE-SPECIFIC FIELD CONDITIONS AND NEEDS.

50% PLANS - PRELIMINARY

| | |
|---|---|
| DESIGNED | MWK/TLJ |
| DRAWN | TLJ |
| CRP | 321222 |
| HOR. | 1"=20' |
| VERT. | NA |
| DATE | 11-21-03 |
| DWG: | EN1 |
| SHEET | 31 OF 36 |

CALL 48 HOURS BEFORE YOU DIG
1-800-553-4344
"It's the Law"
NORTHWEST UTILITIES NOTIFICATION CENTER

DESIGN & ENGINEERING DIVISION
DESIGN SECTION

BETTS BRIDGE #26 REPLACEMENT (SALMON CREEK AVE.)
BANK RESTORATION & STABILIZATION PLAN

proud past, promising future
CLARK COUNTY
WASHINGTON

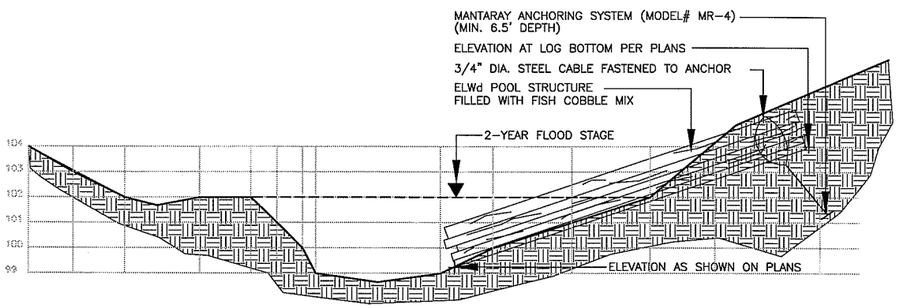


1 ELWd LOG PROTECTION STRUCTURE 1

SCALE: NTS

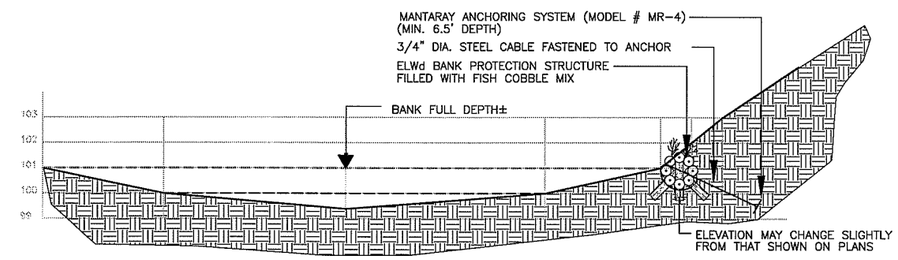


2 ELWd LOG PROTECTION STRUCTURE 2

SCALE: NTS

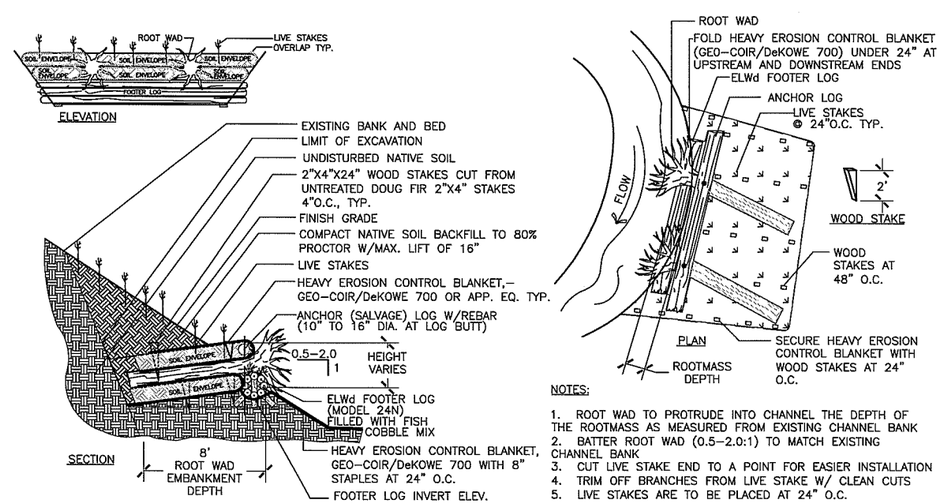


NOTES:

1. ROOT WAD TO PROTRUDE INTO CHANNEL THE DEPTH OF THE ROOTMASS AS MEASURED FROM EXISTING CHANNEL BANK
2. BATTER ROOT WAD (0.5-2.0:1) TO MATCH EXISTING CHANNEL BANK
3. CUT LIVE STAKE END TO A POINT FOR EASIER INSTALLATION
4. TRIM OFF BRANCHES FROM LIVE STAKE W/ CLEAN CUTS
5. LIVE STAKES ARE TO BE PLACED AT 24" O.C.

3 SOIL WRAPPED WALL

SCALE: NTS

50% PLANS - PRELIMINARY

| | |
|---|---|
| DESIGNED | ASZ |
| DRAWN | ASZ |
| CRP | 321222 |
| HOR. | NA |
| VERT. | NA |
| DATE | 11-21-03 |
| DWG: | EN2 |
| SHEET | 32 OF 36 |

CALL 48 HOURS BEFORE YOU DIG
1-800-553-4344
"It's the Law"
NORTHWEST UTILITIES NOTIFICATION CENTER

DESIGN & ENGINEERING DIVISION
DESIGN SECTION

*BETTS BRIDGE #26 REPLACEMENT (SALMON CREEK AVE.)*
*BANK RESTORATION AND STABILIZATION DETAILS*

proud past, promising future
CLARK COUNTY
WASHINGTON

| RAMP | TYPE | FACE OF RAMP | BACK OF RAMP |
|---|---|---|---|
| R1 | 1A | | |
| R2 | 1A | | |

SCALE IN FEET

20 0 20 40

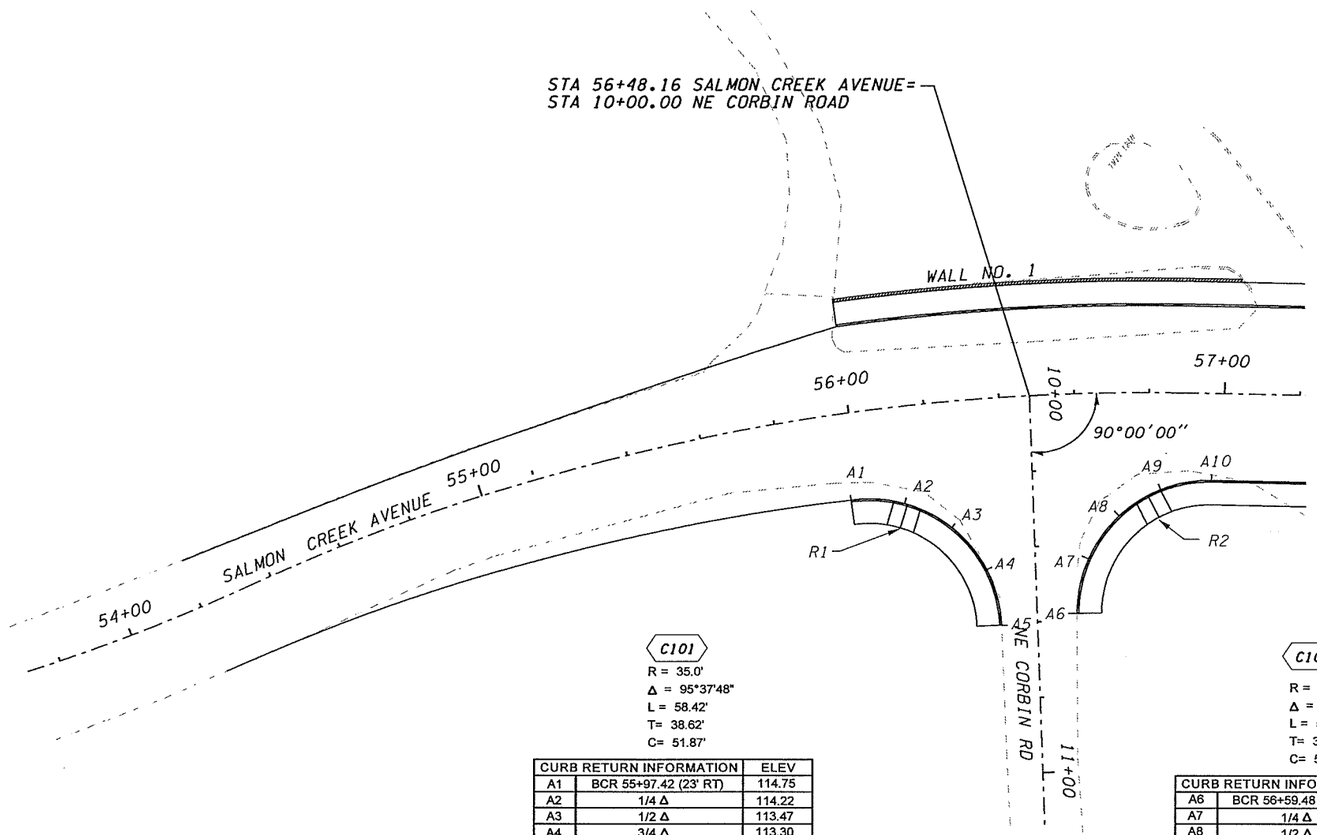


C101

R = 35.0'
Δ = 95°37'48"
L = 58.42'
T= 38.62'
C= 51.87'

| CURB RETURN INFORMATION | | ELEV |
|---|---|---|
| A1 | BCR 55+97.42 (23' RT) | 114.75 |
| A2 | 1/4 Δ | 114.22 |
| A3 | 1/2 Δ | 113.47 |
| A4 | 3/4 Δ | 113.30 |
| A5 | ECR 56+36.40 (60.2' RT) | 113.30 |

C102

R = 35.0'
Δ = 91°26'48"
L = 55.86'
T= 35.90'
C= 50.12'

| CURB RETURN INFORMATION | | ELEV |
|---|---|---|
| A6 | BCR 56+59.48 (58.2' RT) | 113.36 |
| A7 | 1/4 Δ | 113.10 |
| A8 | 1/2 Δ | 112.43 |
| A9 | 3/4 Δ | 112.34 |
| A10 | ECR 56+97.34 (23' RT) | 112.10 |

NOTE: ELEV = Top of curb elevation.

50% PLANS
PRELIMINARY

DESIGNED PW
DRAWN PW
CRP 321222
HOR. 20
VERT. 20
DATE 11/03
DWG: INT1
SHEET 33 OF 36

CALL 48 HOURS BEFORE YOU DIG
1-800-553-4344
"It's the Law"
NORTHWEST UTILITIES NOTIFICATION CENTER

DESIGN & ENGINEERING DIVISION
DESIGN SECTION

BETTS BRIDGE #26 REPLACEMENT (SALMON CREEK AVE.)
INTERSECTION PLAN

proud past, promising future
CLARK COUNTY
WASHINGTON

PLOT1

| RAMP | TYPE | FACE OF RAMP | BACK OF RAMP |
|---|---|---|---|
| R3 | 1A | | |
| R4 | 1A | | |

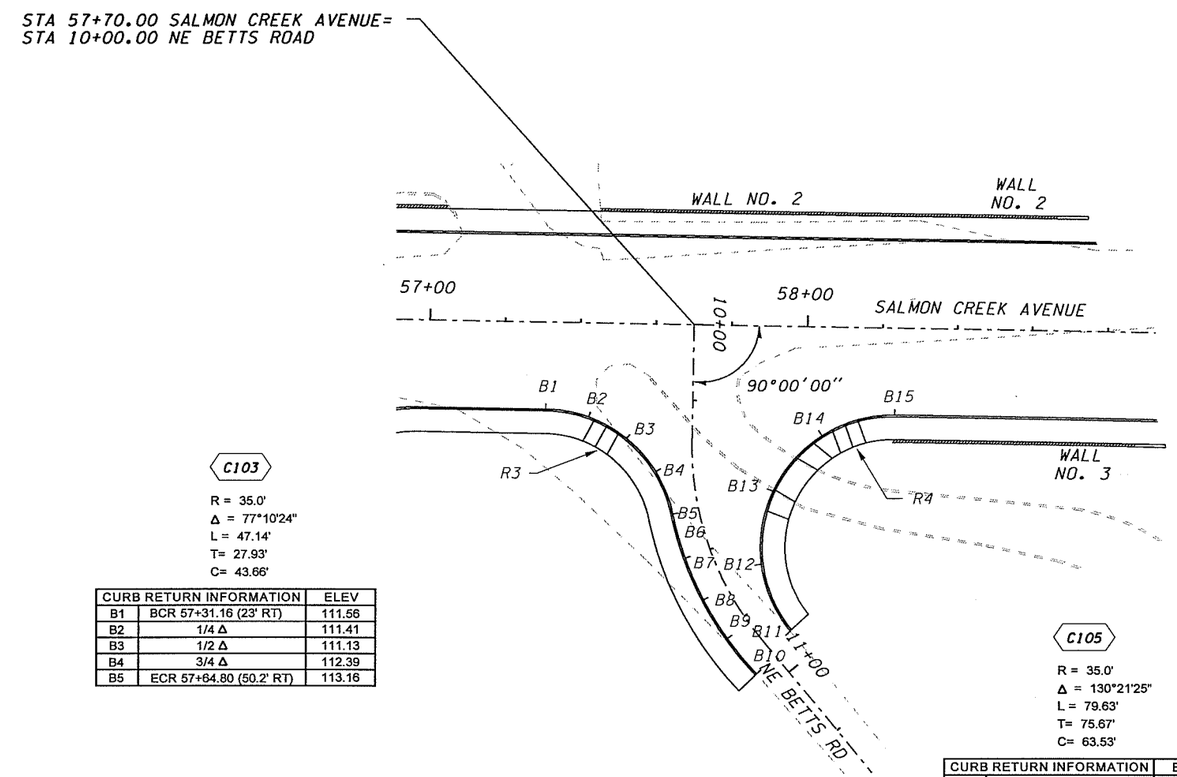


C103

R = 35.0'
Δ = 77°10'24"
L = 47.14'
T= 27.93'
C= 43.66'

| CURB RETURN INFORMATION | | ELEV |
|---|---|---|
| B1 | BCR 57+31.16 (23' RT) | 111.56 |
| B2 | 1/4 Δ | 111.41 |
| B3 | 1/2 Δ | 111.13 |
| B4 | 3/4 Δ | 112.39 |
| B5 | ECR 57+64.80 (50.2' RT) | 113.16 |

C104

R = 86.86'
Δ = 31°55'349
L = 48.41'
T= 24.85'
C= 47.48'

| CURB RETURN INFORMATION | | ELEV |
|---|---|---|
| B6 | BCR 57+64.80 (50.2' RT) | 113.16 |
| B7 | 1/4 Δ | 113.99 |
| B8 | 1/2 Δ | 115.11 |
| B9 | 3/4 Δ | 115.85 |
| B10 | ECR 57+88.20 (92' RT) | 116.46 |

C105

R = 35.0'
Δ = 130°21'25"
L = 79.63'
T= 75.67'
C= 63.53'

| CURB RETURN INFORMATION | | ELEV |
|---|---|---|
| B11 | BCR 57+96.90 (80.6' RT) | 116.54 |
| B12 | 1/4 Δ | 114.83 |
| B13 | 1/2 Δ | 112.85 |
| B14 | 3/4 Δ | 110.97 |
| B15 | ECR 58+23.56 (23' RT) | 111.10 |

NOTE: ELEV = Top of curb elevation.

SCALE IN FEET
20 0 20 40

50% PLANS
PRELIMINARY

DESIGNED PW
DRAWN PW
CRP 321222
HOR. 20
VERT. 20
DATE 11/03
DWG: INT2
SHEET 34 OF 36

CALL 48 HOURS BEFORE YOU DIG
1-800-553-4344
"It's the Law"
NORTHWEST UTILITIES NOTIFICATION CENTER

DESIGN & ENGINEERING DIVISION
DESIGN SECTION

BETTS BRIDGE #26 REPLACEMENT (SALMON CREEK AVE.)
INTERSECTION PLAN

proud past, promising future
CLARK COUNTY
WASHINGTON

PLOT2

| CURVE DATA | | | | | |
|---|---|---|---|---|---|
| P.I. STATION | DELTA | RADIUS | TANGENT | LENGTH | BK. TAN. BRG. |
| 61+58.22 | 56°36'24" RT. | 254.00 | 136.78 | 408.16 | N 34°56'03" W |

SEC. 25, T3N., R1E., W.M.
CLARK COUNTY, WA

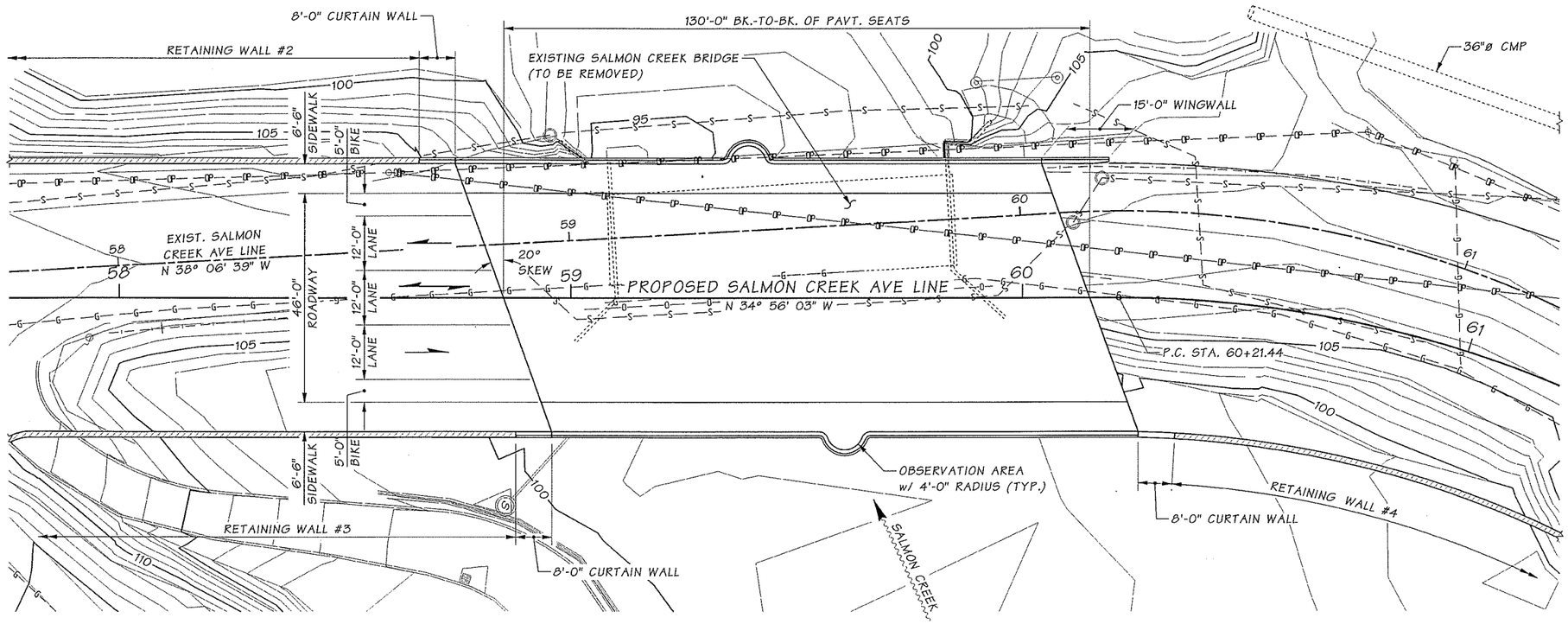


PLAN

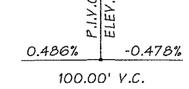


SALMON CREEK LINE
PROFILE

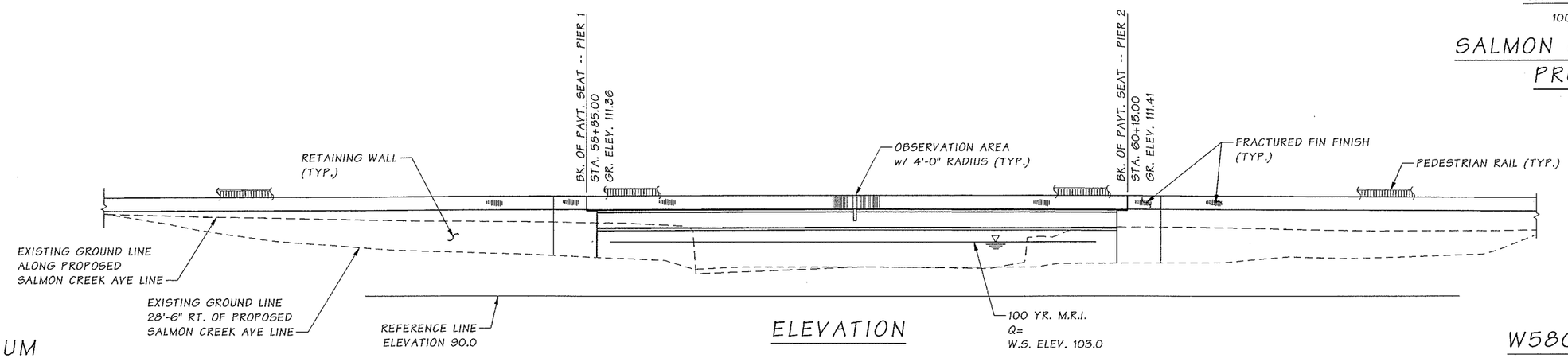


ELEVATION

DATUM
N.A.V.D. OF 1988

W58G PC GIRDERS
LOADING: HL-93

SR 0 JOB NO. 0 SHEET 1

| | | | | | | | | | | |
|---|---|---|---|---|---|---|---|---|---|---|
| Bridge Design Engr. | Kapur, J | M:\Y-Team\Clark County Salmon Creek\window files\PRELIM LO.WND | | | | | | | | |
| Supervisor | Kirker, KN | | | | | REGION NO. | STATE | FED. AID PROJ. NO. | SHEET NO. | TOTAL SHEETS |
| Designed By | | | | | | 10 | WASH. | | | |
| Checked By | | | | | | | | | | |
| Detailed By | Evans, P.D. 11/03 | | | | | JOB NUMBER | | | | |
| Bridge Projects Engr. | | | | | | 0 | | | | |
| Prelim. Plan By | Nebergall, D 11/03 | | | | | | | | | |
| Architect/Specialist | | DATE | REVISION | BY | APP'D | | | | | |

Fri Nov 21 08:29:31 2003

BRIDGE AND STRUCTURES OFFICE

Washington State Department of Transportation

SALMON CREEK AVENUE
BETTS BRIDGE REPLACEMENT

BRIDGE #26

PRELIMINARY LAYOUT

BRIDGE SHEET NO. 1

SHEET 35 OF 36 SHEETS

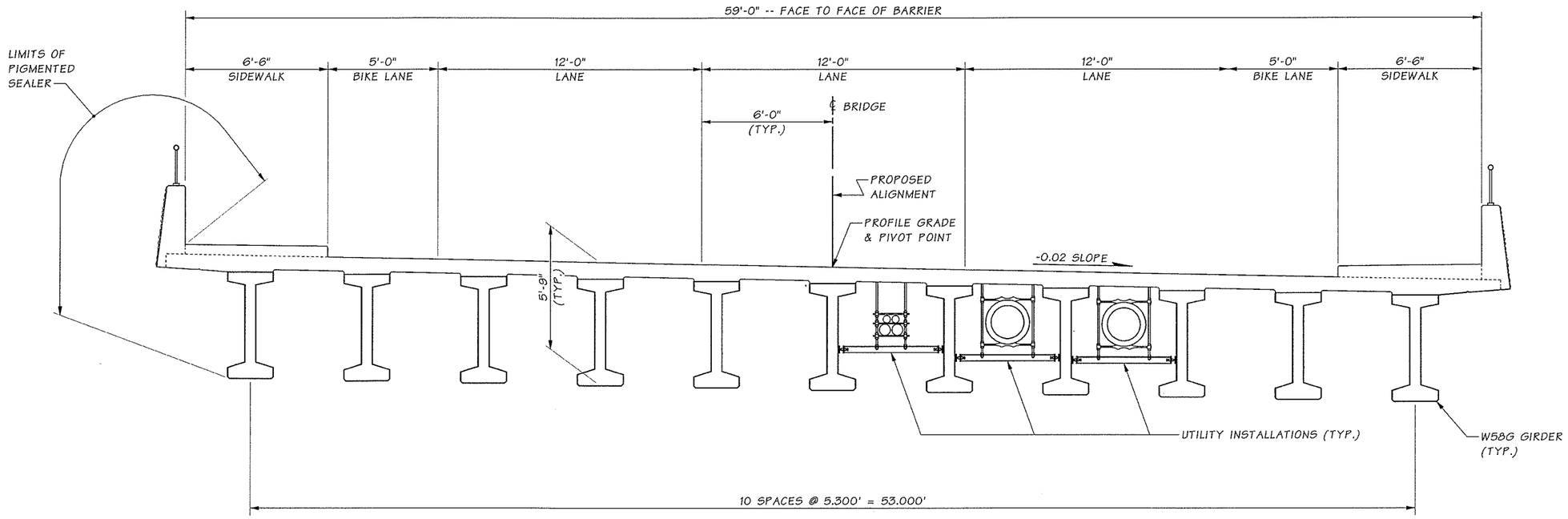


## TYPICAL SECTION

LOOKING AHEAD ON STATION

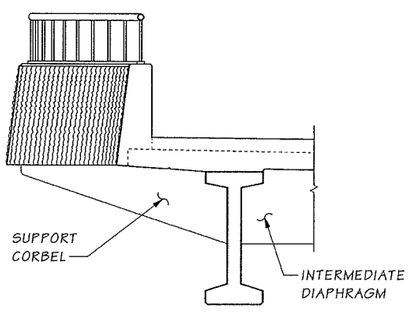


## SECTION NEAR OBSERVATION AREA

SR 0 JOB NO. 0 SHEET 2

| | | | | | | | | | | |
|---|---|---|---|---|---|---|---|---|---|---|
| Bridge Design Engr. | Kapur, J | | M:\Y-Team\Clark County Salmon Creek\window files\PRELIM SECT.WND | | | | | | | |
| Supervisor | Kirker, KN | | | | | REGION NO. | STATE | FED. AID PROJ. NO. | SHEET NO. | TOTAL SHEETS |
| Designed By | | | | | | 10 | WASH. | | | |
| Checked By | | | | | | | | | | |
| Detailed By | Evans, P.D. | 11/03 | | | | JOB NUMBER | | | | |
| Bridge Projects Engr. | | | | | | 0 | | | | |
| Prelim. Plan By | Nebergall, D | 11/03 | | | | | | | | |
| Architect/Specialist | | | DATE | REVISION | BY | APP'D | | | | |

Fri Nov 21 08:29:33 2003

BRIDGE AND STRUCTURES OFFICE

Washington State Department of Transportation

SALMON CREEK AVENUE
BETTS BRIDGE REPLACEMENT

BRIDGE #26

TYPICAL SECTION

BRIDGE SHEET NO. 2

SHEET 36 OF 36 SHEETS