CAPITAL IMPROVEMENTS PROGRAM

N.E. HIGHWAY 99/N.E. 20TH AVENUE REALIGNMENT

FROM N.E. 129TH ST. TO N.E. 138TH ST.

COUNTY ROAD PROJECT #392922 FEDERAL AID PROJECT #STPF-4253(010) TA # 1164

PLANS FOR THE CONSTRUCTION OF ROADWAYS, STORM DRAINAGE AND A BRIDGE WIDENING

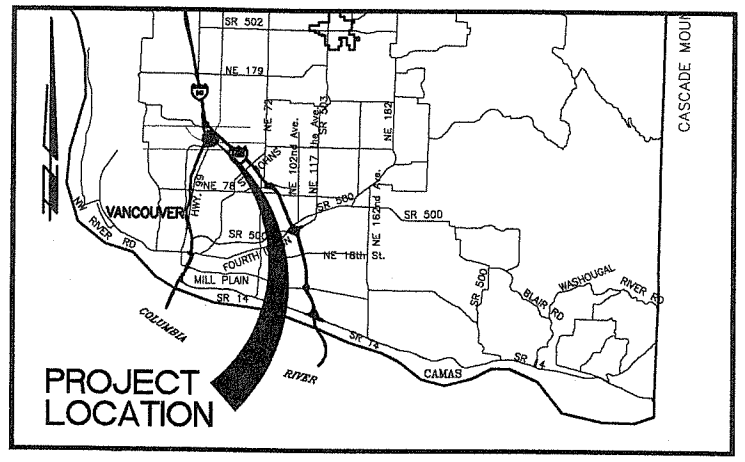

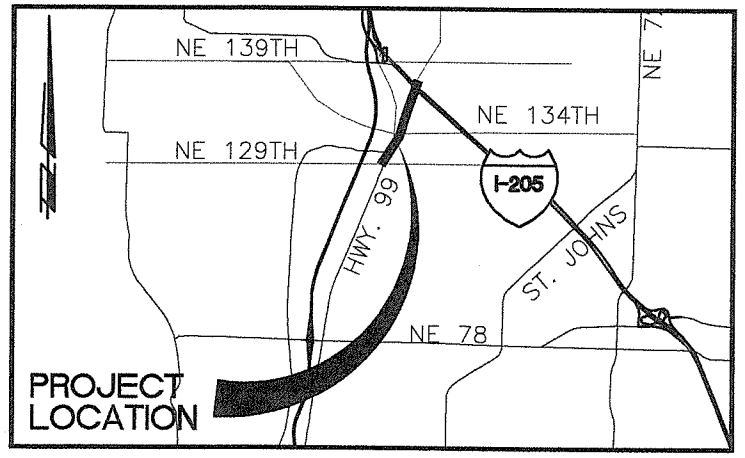

VICINITY MAPS

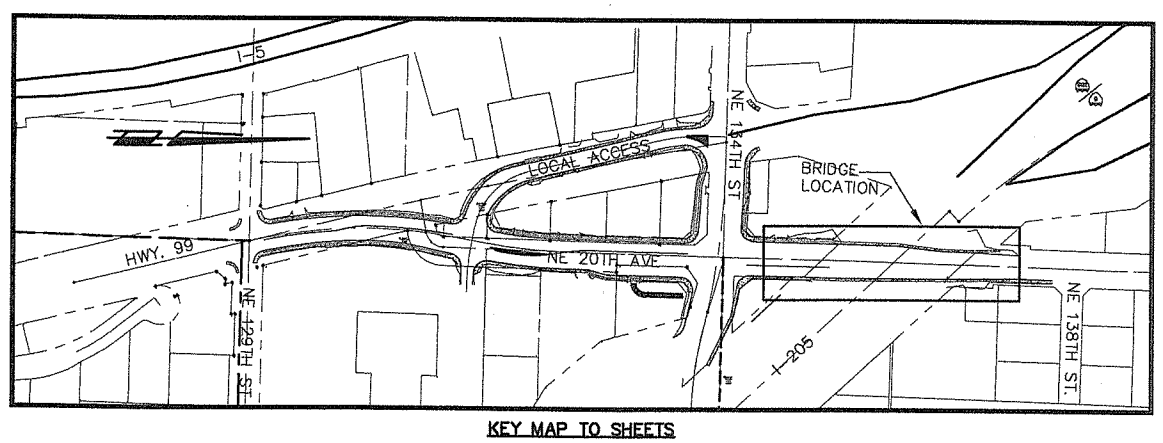

KEY MAP TO SHEETS

INDEX OF SHEETS: VOLUME II – BRIDGE SHEETS

SHT.	DWG.	DESCRIPTION
1	CV2	COVER SHEET
2	S04	SUMMARY OF QUANTITIES
3	S01	BRIDGE LAYOUT SHEET
4	S02	GENERAL NOTES AND EXISTING ROADWAY ELEVATIONS
5	S03	CONSTRUCTION SEQUENCE PLAN I
6	S04	CONSTRUCTION SEQUENCE PLAN II
7	S05	EXISTING PIER 1 PARTIAL DEMOLITION DETAILS
8	S06	EXISTING PIER 5 PARTIAL DEMOLITION DETAILS
9	S07	EXISTING BRIDGE BARRIER AND DECK DEMOLITION DETAILS
10	S08	DRILLING DETAILS
11	S09	FOUNDATION PLAN
12	S10	PILING DETAILS
13	S11	BEARING AND MISC. DETAILS
14	S12	PIER 1 PLAN AND ELEVATION
15	S13	PIER 1 SECTIONS AND DETAILS I
16	S14	PIER 1 SECTIONS AND DETAILS II
17	S15	PIER 2 DRILLED SHAFTS AND COLUMNS
18	S16	PIER 3 DRILLED SHAFTS AND COLUMNS
19	S17	PIER 4 DRILLED SHAFTS AND COLUMNS
20	S18	PIER 2 WEST CROSSBEAM I
21	S19	PIER 2 WEST CROSSBEAM II
22	S20	PIER 2 EAST CROSSBEAM I
23	S21	PIER 2 EAST CROSSBEAM II
24	S22	PIER 3 WEST CROSSBEAM I
25	S23	PIER 3 WEST CROSSBEAM II
26	S24	PIER 3 EAST CROSSBEAM I
27	S25	PIER 3 EAST CROSSBEAM II
28	S26	PIER 4 WEST CROSSBEAM I
29	S27	PIER 4 WEST CROSSBEAM II
30	S28	PIER 4 EAST CROSSBEAM I
31	S29	PIER 4 EAST CROSSBEAM II
32	S30	PIER 5 PLAN AND ELEVATION
33	S31	PIER 5 SECTIONS AND DETAILS I
34	S32	PIER 5 SECTIONS AND DETAILS II
35	S33	RETAINING WALL 1 PLAN, ELEVATION AND DETAILS
36	S34	RETAINING WALL 2 PLAN, ELEVATION AND DETAILS
37	S35	DECK SECTION TYPICAL CONCRETE OUTLINE
38	S36	BRIDGE CAMBER DIAGRAMS
39	S37	BRIDGE SUPERSTRUCTURE FRAMING PLAN SPAN 1
40	S38	BRIDGE SUPERSTRUCTURE FRAMING PLAN SPAN 2
41	S39	BRIDGE SUPERSTRUCTURE FRAMING PLAN SPAN 3
42	S40	BRIDGE SUPERSTRUCTURE FRAMING PLAN SPAN 4
43	S41	TYPICAL SECTION REINFORCING SPAN 1
44	S42	TYPICAL SECTION REINFORCING PIER 2
45	S43	TYPICAL SECTION REINFORCING SPAN 2
46	S44	TYPICAL SECTION REINFORCING PIER 3
47	S45	TYPICAL SECTION REINFORCING SPAN 3
48	S46	TYPICAL SECTION REINFORCING PIER 4
49	S47	TYPICAL SECTION REINFORCING SPAN 4
50	S48	BOTTOM SLAB REINFORCING SPAN 1
51	S49	BOTTOM SLAB REINFORCING SPAN 2
52	S50	BOTTOM SLAB REINFORCING SPAN 3
53	S51	BOTTOM SLAB REINFORCING SPAN 4
54	S52	WEST LONGITUDINAL WEB ELEVATIONS SPANS 1 & 4
55	S53	WEST LONGITUDINAL WEB ELEVATIONS SPAN 2 & 3
56	S54	EAST LONGITUDINAL WEB ELEVATIONS SPANS 1 & 4
57	S55	EAST LONGITUDINAL WEB ELEVATIONS SPANS 2 & 3
58	S56	DIAPHRAGM REINFORCING AND DETAILS I
59	S57	DIAPHRAGM REINFORCING AND DETAILS II
60	S58	UTILITY DETAILS
61	S59	TOP SLAB REINFORCING SPAN 1 & PIER 2
62	S60	TOP SLAB REINFORCING PIER 3
63	S61	TOP SLAB REINFORCING PIER 4 & SPAN 4
64	S62	TYPICAL SPLICE
65	S63	BRIDGE BARRIER DETAILS I
66	S64	BRIDGE BARRIER DETAILS II
67	S65	BRIDGE RAILING TYPE BP DETAILS I
68	S66	BRIDGE RAILING TYPE BP DETAILS II
69	S67	BRIDGE EXPANSION JOINT DETAILS
70	S68	SIGN RELOCATION DETAILS
71	S69	EXISTING BRIDGE COLUMN STEEL CASING DETAILS AND PIER 1 & 5 MODIFICATIONS
72	S70	UTILITY HANGER DETAILS
73	S71	BAR LIST I
74	S72	BAR LIST II
75	S73	BAR LIST III
76	S74	BAR LIST IV
77	S75	BAR LIST V
78	S76	BAR LIST VI

SEE VOLUME I FOR ROADWAY / STORM DRAINAGE SHEETS.

COMMISSIONERS:

BETTY SUE MORRIS, Chair
CRAIG PRIDEMORE, Commissioner
JUDIE STANTON, Commissioner

CALL 48 HOURS BEFORE YOU DIG
1-800-553-4344
"It's the Law"
CLARK COUNTY UTILITIES COORDINATING COUNCIL

proud past, promising future
CLARK COUNTY
WASHINGTON

DEPARTMENT OF PUBLIC WORKS

DESIGN AND ENGINEERING DIVISION- DESIGN SECTION

kpff Consulting Engineers
111 SW 5th Avenue
Suite 2500
Portland, Oregon 97204
503-227-3251

otak SINCE 1981 Incorporated
Vancouver, WA 98660-3123
Phone: (360) 737-9613
FAX: (360) 737-9651

Quality Assurance	Project Managers	Director of Public Works
2/24/04 DATE:	2-24-04 DATE:	2/24/04 DATE:
Greg Shafer, P.E.	Matt Hall, P.M.P.	Peter Capell, P.E.

WYATT H. HASAKA, STATE OF WASHINGTON, 20363, REGISTERED PROFESSIONAL ENGINEER
2/19/04
EXPIRES 2/9/2006

REF LIST
iscale: 1
esolved
978X230
978B191
KW WASH

V: JOHNSA 11/04/03 2:31pm --> R:\PWG\CSTMSCON_BRIDGE.DWG

LIST
dc: 1
hred
X001
WASH

Fed. Aid No.
STPF-4253(010)

SUMMARY OF QUANTITIES

STATE ITEM # / SALES TAX	COUNTY ITEM # / NO SALES TAX	UNIT	TOTAL QUANTITY	DESCRIPTION	STATE OWNED LANDS	COUNTY OWNED LANDS	CPU UTILITIES
1		L.S.	1	MOBILIZATION	1		
2		L.S.	1	REMOVE PORTION OF EXISTING BRIDGE NO. 205/46	1		
3		C.Y.	842	STRUCTURE EXCAVATION CLASS A INCLUDING HAUL	842		
4		L.S.	1	SHORING OF EXTRA EXCAVATION CALSS A – BRIDGE NO. 205/46	1		
5		C.Y.	780	SOIL EXCAVATION FOR SHAFT INCLUDING HAUL	780		
6		L.F.	39	FURNISH PERMANENT CASING FOR 7'-6" DIAMETER SHAFT	39		
7		EACH	6	PLACING PERMANENT CASING FOR 7'-6" DIAMETER SHAFT	6		
8		L.S.	54	CASING SHORING	54		
9		EST.	1	REMOVING OBSTRUCTIONS	1		
10		EACH	4	FURNISHING AND DRIVING CONCRETE TEST PILE	4		
11		L.F.	2,900	FURNISH CONCRETE PILE 18" DIAMETER	2,900		
12		EACH	38	DRIVING CONCRETE PILE 18" DIAMETER	38		
13		L.B.	67,600	STEEL REINFORCING BAR FOR BRIDGE	67,600		
14		L.B.	10,900	STEEL REINFORCING BAR FOR WALL	10,900		
15		L.B.	126,100	STEEL REINFORCING BAR FOR SHAFT	126,100		
16		L.F.	3,520	CSL ACCESS TUBE	3,250		
17		C.Y.	700	CONCRETE CLASS 4000P FOR SHAFT	700		
18		C.Y.	110	CONCRETE CLASS 4000 FOR WALL	110		
19		C.Y.	280	CONCRETE CLASS 4000 FOR BRIDGE	280		
20		L.S.	1	COLUMN JACKETING – BRIDGE NO. 205/46	1		
21		EACH	16	CYLINDRICAL BEARING – SUPERSTRUCTURE	16		
22		EACH	8	ACCESS HATCH	8		
23		L.S.	1	SUPERSTRUCTURE – N.E. 20TH AVE. U'XING 205/46 WIDENING	1		
24		L.F.	959	BRIDGE RAILING TYPE BP	959		
25		L.F.	959	PEDESTRIAN BARRIER	959		
26		EST.	1	FORCE ACCOUNT BOX GIRDER CLOSURE PRELOAD	1		
27		EA.	6	CROSSHOLE SONIC LOG TESTING	6		
28		C.Y.	80	GRAVEL BACKFILL FOR FOUNDATIONS (CLASS A)	80		
29		C.Y.	190	GRAVEL BACKFILL FOR WALLS	190		

DESIGNED C. TOTTEN
DRAWN J. WILKES
CRP 392822
HOR. N/A
VERT. N/A
DATE FEB. 20, 2004
DWG: SQ4
SHEET 2 OF 78

CALL 48 HOURS BEFORE YOU DIG 1-800-553-4344 "It's the Law" CLARK COUNTY UTILITIES COORDINATING COUNCIL

DESIGN & ENGINEERING DIVISION

NE 20TH AVE/HGWY 99 REALIG.
CLARK COUNTY
SUMMARY OF QUANTITIES

STATE OF WASHINGTON
DAVID A. WILLIAMS
26824
REGISTERED PROFESSIONAL ENGINEER
2/19/04
EXPIRES 2/9/2006

otak Incorporated
105 N. Evergreen Blvd., Suite 500
Vancouver, WA 98660-3123
Phone: (360) 737-4613
FAX: (360) 737-9681

kpff Consulting Engineers
111 SW 5th Avenue
Suite 2500
Portland, Oregon 97204
503-227-3251

proud past, promising future
CLARK COUNTY
WASHINGTON

SEC. 26, T. 3 N., R. 1 E., W.M.

CLARK COUNTY

Fed. Aid No.
STPF-4253(010)

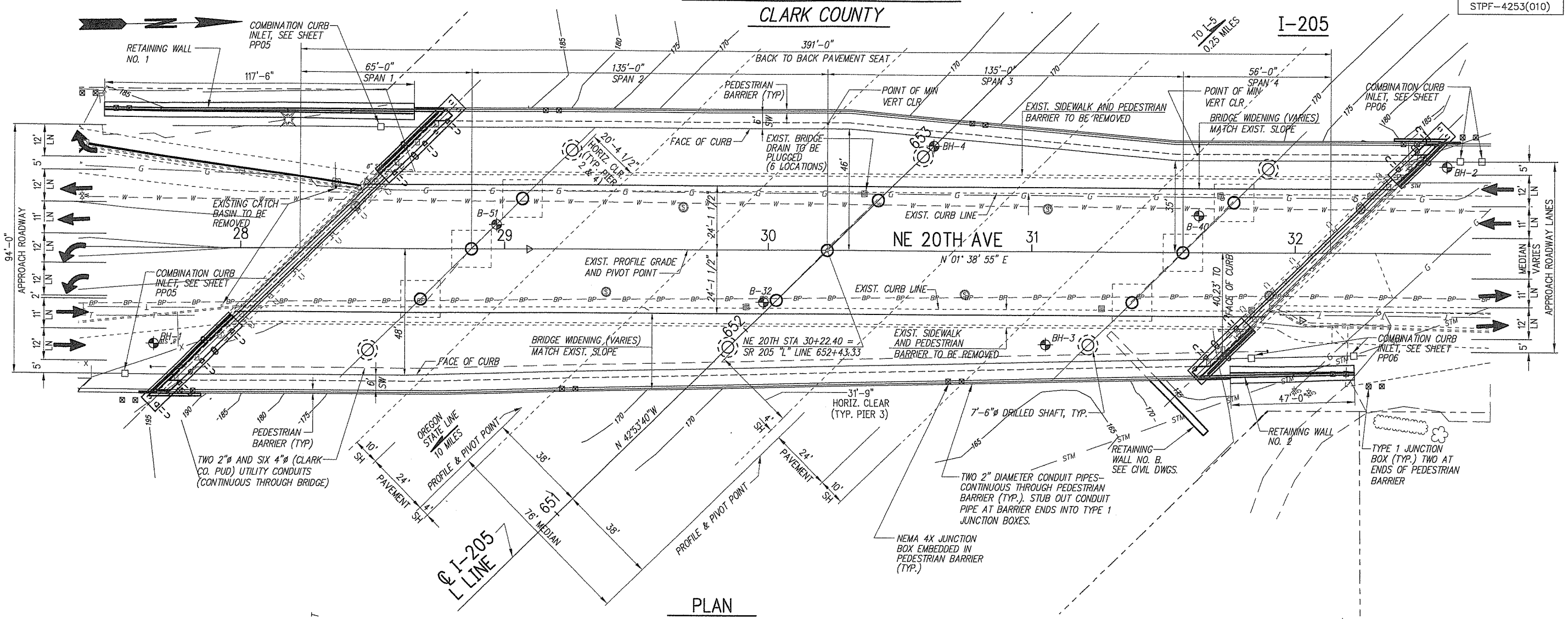

PLAN

BEARING OF ALL PIERS TO MATCH EXISTING.
(EXISTING BRIDGE PLANS SHOW ALL PIERS PARALLEL TO PIER 3)

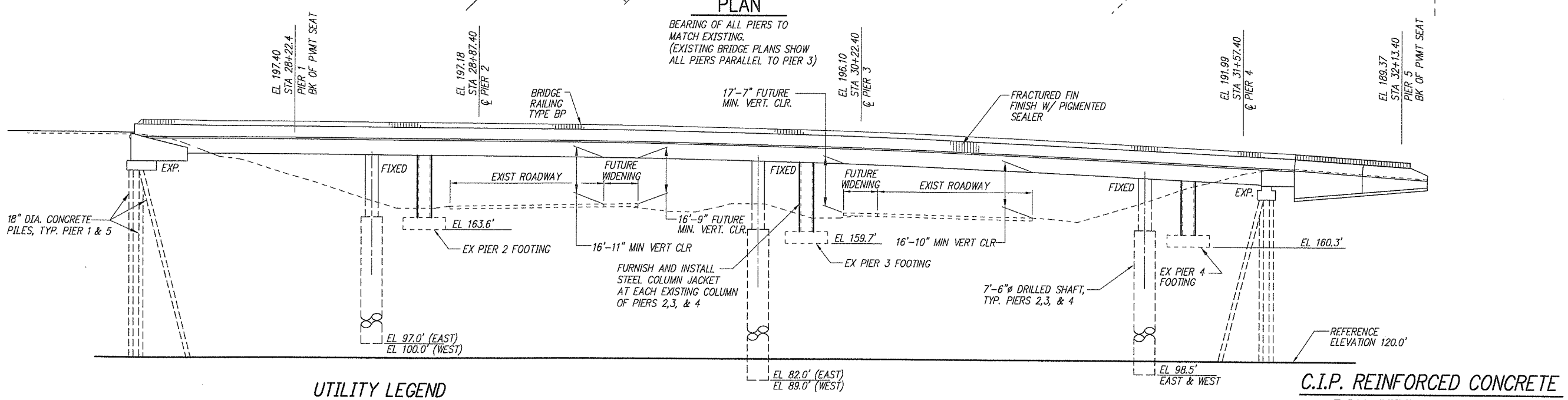

DEVELOPED ELEVATION

GRADE ELEVATIONS SHOWN ARE EXISTING FINISH GRADES AT TOP OF THE ROADWAY SLAB AND ARE EQUAL TO PROFILE GRADE.
SEE STANDARD PLAN H-9 FOR EMBANKMENT DETAILS AT BRIDGE ENDS.

EXISTING BRIDGE DATUM

U.S.C. & G.S.
[FOR PROJECT DATUM SEE DRAWING SQ1]

UTILITY LEGEND

— — BP — — BP — — BP —	EXISTING BURIED POWER
— — S — — S — — S —	EXISTING SEWER LINE
— — W — — W — — W —	EXISTING WATER LINE
— — ST — — ST — — ST —	EXISTING STORM DRAIN
— — G — — G — — G —	EXISTING GAS LINE

C.I.P. REINFORCED CONCRETE BOX GIRDER WIDENING

LOADING: HS-25 OR
TWO 24^{K} AXLES @ 4' C'TRS.

DESIGNED C. TOTTEN
DRAWN J. MILKES
CRP 393922
HOR. N/A
VERT. N/A
DATE FEB. 20, 2004
DWG: SQ1
SHEET 3 OF 78

CALL 48 HOURS BEFORE YOU DIG 1-800-553-4344 "It's the Law"
CLARK COUNTY UTILITIES COORDINATING COUNCIL

DESIGN & ENGINEERING DIVISION
NE 20TH AVE/HGWY 99 REALIG.
CLARK COUNTY
BRIDGE LAYOUT SHEET

STATE OF WASHINGTON
CHRISTOPHER J. TOTTEN
PROFESSIONAL ENGINEER
EXPIRES 2/10/2006
2/10/04

otak Incorporated
105 W. Evergreen Blvd., Suite 300
Vancouver, WA 98660-3123
Phone: (360) 737-8513
FAX: (360) 737-9931

kpff Consulting Engineers
111 SW 5th Avenue
Suite 2500
Portland, Oregon 97204
503-227-3251

proud past, promising future
CLARK COUNTY WASHINGTON

JOB #	JOB NAME	FILE PATH & NAME	UCS	VIEW	UPDATED BY	PLOTTED DATE & TIME
99680	N.E. HIGHWAY 99	D:\2-PROJECTS\99680\99680-S1.DWG	PLOT SET UP	P SPACE	PLOT SCALE	PLOT BY
FS:	WSP1A, CONT2, XSURV, NE99XRW, XBRIDGE, X99680,		ORIGINAL TO	YES	1:1	RICKT

DISCARD OLD # PRINTS | PRINT

Fed. Aid No.
STPF-4253(010)

Existing SR 205 Roadway Elevations

Station "L" Line	OFFSET			
	72.0 LT	34.0 LT	34.0 RT	72.0 RT
650+70.00	172.29	-	-	-
650+80.00	172.26	-	-	-
650+90.00	172.22	-	-	-
651+00.00	172.18	173.11	-	-
651+10.00	172.14	173.09	-	-
651+20.00	172.09	173.05	-	-
651+30.00	172.05	173.01	-	-
651+40.00	172.00	172.97	-	-
651+50.00	171.95	172.93	-	-
651+60.00	171.90	172.89	-	-
651+70.00	171.85	172.86	169.19	-
651+80.00	171.82	172.82	169.20	-
651+90.00	171.79	172.78	169.20	-
652+00.00	171.76	172.75	169.20	-
652+10.00	171.73	172.67	169.21	-
652+20.00	171.70	172.64	169.21	168.20
652+30.00	171.67	172.61	169.22	168.21
652+40.00	171.62	172.58	169.24	168.21
652+50.00	171.58	172.55	169.25	168.21
652+60.00	171.54	172.52	169.27	168.21
652+70.00	171.50	172.48	169.28	168.23
652+80.00	171.37	172.42	169.30	168.25
652+90.00	-	172.36	169.35	168.28
653+00.00	-	172.30	169.39	168.31
653+10.00	-	172.23	169.44	168.34
653+20.00	-	-	169.49	168.36
653+30.00	-	-	169.54	168.38
653+40.00	-	-	169.60	168.39
653+50.00	-	-	169.67	168.41
653+60.00	-	-	169.74	168.43
653+70.00	-	-	169.80	168.44
653+80.00	-	-	169.87	168.46
653+90.00	-	-	-	168.48
654+00.00	-	-	-	168.50

Existing Elevations Bridge SR 205 / 46				Bridge Widening Elevations			
Station	CL Roadway	Right Existing Curb Line (22.0 RT)	Left Existing Curb Line (22.0 LT)	Right New Curb Line Elevation	Right New Curb Line Offset (RT)	Left New Curb Line Elevation	Left New Curb Line Offset (LT)
27+60.00	197.67	197.18	197.32	196.60	48.00	-	46.00
27+70.00	197.60	197.11	197.31	196.53	48.00	-	46.00
27+80.00	197.53	197.04	197.31	196.46	48.00	-	46.00
27+90.00	197.46	197.08	197.30	196.63	48.00	197.13	46.00
28+00.00	197.45	197.12	197.28	196.73	48.00	197.09	46.00
28+10.00	197.43	197.07	197.25	196.64	48.00	197.05	46.00
28+20.00	197.41	196.98	197.17	196.51	48.00	196.91	46.00
28+30.00	197.38	196.91	197.11	196.35	48.00	196.82	46.00
28+40.00	197.34	196.90	197.03	196.38	48.00	196.69	46.00
28+50.00	197.30	196.89	196.92	196.41	48.00	196.51	46.00
28+60.00	197.27	196.87	196.89	196.40	48.00	196.48	46.00
28+70.00	197.24	196.84	196.86	196.37	48.00	196.45	46.00
28+80.00	197.21	196.80	196.84	196.32	48.00	196.44	46.00
28+90.00	197.17	196.77	196.81	196.30	47.66	196.42	46.00
29+00.00	197.14	196.73	196.78	196.26	47.40	196.39	46.00
29+10.00	197.09	196.68	196.73	196.21	47.14	196.34	46.00
29+20.00	197.04	196.62	196.68	196.15	46.88	196.29	46.00
29+30.00	196.99	196.57	196.62	196.10	46.62	196.22	46.00
29+40.00	196.93	196.50	196.57	196.02	46.35	196.18	46.00
29+50.00	196.87	196.44	196.51	195.97	46.09	196.12	46.00
29+60.00	196.81	196.37	196.44	195.89	45.83	196.04	46.00
29+70.00	196.72	196.26	196.34	195.77	45.57	195.93	46.00
29+80.00	196.64	196.17	196.23	195.67	45.30	195.78	46.00
29+90.00	196.54	196.10	196.13	195.64	45.04	195.68	46.00
30+00.00	196.44	195.98	196.03	195.50	44.78	195.58	46.00
30+10.00	196.33	195.89	195.93	195.44	44.52	195.49	46.00
30+20.00	196.16	195.71	195.73	195.25	44.25	195.26	46.00
30+30.00	195.94	195.52	195.50	195.10	43.99	195.02	46.00
30+40.00	195.72	195.32	195.34	194.92	43.73	194.94	45.17
30+50.00	195.44	195.05	195.07	194.67	43.47	194.70	44.28
30+60.00	195.16	194.79	194.80	194.43	43.20	194.45	43.39
30+70.00	194.87	194.51	194.51	194.17	42.94	194.17	42.50
30+80.00	194.59	194.22	194.20	193.87	42.68	193.85	41.60
30+90.00	194.32	193.93	193.89	193.57	42.42	193.52	40.73
31+00.00	194.02	193.62	193.58	193.25	42.16	193.22	39.84
31+10.00	193.68	193.29	193.26	192.94	41.89	192.94	38.95
31+20.00	193.34	192.96	192.93	192.62	41.63	192.63	38.06
31+30.00	193.00	192.57	192.59	192.19	41.37	192.31	37.17
31+40.00	192.65	192.23	192.23	191.87	41.11	191.96	36.28
31+50.00	192.29	191.89	191.88	191.55	40.84	191.63	35.40
31+60.00	191.88	191.45	191.44	191.09	40.58	191.18	35.00
31+70.00	191.45	191.00	191.01	190.63	40.32	190.75	35.00
31+80.00	191.02	190.55	190.54	190.17	39.94	190.26	35.00
31+90.00	190.54	190.08	190.06	189.71	39.56	189.78	35.00
32+00.00	190.04	189.55	189.59	189.17	39.17	189.32	35.00
32+10.00	189.54	189.03	189.11	188.64	38.78	188.86	35.00
32+20.00	189.01	188.51	188.62	188.14	38.39	188.39	35.00
32+30.00	188.47	187.97	188.09	187.61	38.00	187.87	35.00
32+40.00	187.93	187.43	187.55	187.08	37.61	187.33	35.00

NOTE: "CURB LINE ELEVATIONS" ARE AT GUTTER LINE

GENERAL NOTES

1. ALL MATERIAL AND WORKMANSHIP SHALL BE IN ACCORDANCE WITH THE REQUIREMENTS OF THE WASHINGTON STATE DEPARTMENT OF TRANSPORTATION STANDARD SPECIFICATIONS FOR ROAD, BRIDGE AND MUNICIPAL CONSTRUCTION – ENGLISH, DATED 2002 AND AMENDMENTS.

2. THE WIDENED PORTION OF THE STRUCTURE HAS BEEN DESIGNED IN ACCORDANCE WITH THE REQUIREMENTS OF THE AASHTO STANDARD SPECIFICATIONS FOR HIGHWAY BRIDGES SIXTEENTH EDITION – 1996 AND INTERIMS THROUGH 2001. ALL STRUCTURAL ELEMENTS OF THE WIDENED PORTION ARE DESIGNED IN ACCORDANCE WITH THE REQUIREMENTS FOR LOAD FACTOR DESIGN. SEISMIC DESIGN OF THE WIDENEND PORTION OF THE STRUCTURE HAS BEEN COMPLETED USING AN ACCELERATION COEFFICIENT OF 0.2.

3. CONCRETE IN THE DRILLED SHAFTS AND CONCRETE PILES SHALL BE CLASS 4000P. THE CONCRETE IN THE ROADWAY DECK SHALL BE CLASS 4000D. ALL OTHER CAST-IN-PLACE CONCRETE SHALL BE CLASS 4000.

4. 18" DIAMETER CONCRETE PILES SHALL BE DRIVEN TO AN ULTIMATE LOAD BEARING CAPACITY OF 235 TONS AT PIERS 1 & 5. THE FACTOR OF SAFETY USED TO ESTABLISH THE ULTIMATE LOAD CAPACITY IS 2.75 FOR WAVE EQUATION ANALYSIS ONLY AND 2.25 FOR WAVE EQUATION CALIBRATED TO DYNAMIC PILE DRIVING TEST.

5. THE MAXIMUM ALLOWABLE DESIGN LOAD CAPACITY FOR THE SHAFTS ARE AS FOLLOWS:

	DIAMETER	EAST	WEST
PIER 2	7'-6"	870 TONS	840 TONS
PIER 3	7'-6"	990 TONS	930 TONS
PIER 4	7'-6"	710 TONS	520 TONS

A FACTOR OF SAFETY OF 2.5 WAS USED TO ESTABLISH THE ULTIMATE LOAD CAPACITY.

6. FALSEWORK SHALL BE CAREFULLY RELEASED TO PREVENT IMPACT OR UNDUE STRESS IN THE STRUCTURE.

7. UNLESS OTHERWISE SHOWN ON THE PLANS, THE CONCRETE COVER MEASURED FROM THE FACE OF THE CONCRETE TO THE FACE OF ANY REINFORCING BAR SHALL BE TWO AND ONE HALF INCHES ON THE TOP OF THE ROADWAY SLAB, THREE INCHES AT THE BOTTOM OF FOOTINGS, TWO INCHES AT THE TOP OF FOOTINGS, ONE INCH AT THE BOTTOM OF THE ROADWAY SLAB AND ONE AND ONE HALF INCHES AT ALL OTHER LOCATIONS UNLESS OTHERWISE NOTED.

8. THE DIMENSIONS SHOWN ON THE PLANS ARE BASED ON ORIGINAL CONSTRUCTION RECORDS TOGETHER WITH FIELD SURVEY DATA. THE WIDENED PORTIONS OF THE STRUCTURE ARE INTENDED TO MATCH THE EXISTING BRIDGE. THESE DIMENSIONS AND ELEVATIONS SHALL BE VERIFIED BY THE CONTRACTOR IN THE FIELD.

9. BACKFILL BEHIND ABUTMENTS MAY BE PLACED AND COMPACTED PRIOR TO CONSTRUCTION OF BRIDGE SUPERSTRUCTURE.

LEGEND

A / 20 — IDENTIFIES SECTION, VIEW OR DETAIL
TAKEN OR SHOWN ON BRIDGE SHEET NO.

A / -- — TAKEN OR SHOWN ON THE SAME SHEET

DESIGNED C. TOTTEN
DRAWN J. MUKES
CRP 392922
HOR. N/A
VERT. N/A
DATE FEB. 20, 2004
DWG: S02
SHEET 4 OF 78

CALL 48 HOURS BEFORE YOU DIG 1-800-553-4344 "It's the Law" CLARK COUNTY UTILITIES COORDINATING COUNCIL

DESIGN & ENGINEERING DIVISION
NE 20TH AVE/HGWY 99 REALIG.
CLARK COUNTY
GENERAL NOTES AND EXISTING ROADWAY ELEVATIONS

STATE OF WASHINGTON JOHN H. HASLYN 22853 REGISTERED PROFESSIONAL ENGINEER 2/19/04
EXPIRES 2/9/2006

otak Incorporated
105 W. Evergreen Blvd., Suite 300
Vancouver, WA 98660-3253
Phone: (360) 737-8611
FAX: (360) 737-8651

kpff Consulting Engineers
111 SW 5th Avenue
Suite 2500
Portland, Oregon 97204
503-227-3251

proud past, promising future
CLARK COUNTY WASHINGTON

JOB #	JOB NAME	FILE PATH & NAME	PLOTTED DATE & TIME	UPDATED BY	PLOT SCALE	'PCP' FILE	PLOT VIEW
99680	N.E. HIGHWAY 99	V:\BRIDGE H-P\N.E. HIGHWAY 99 (99406)\INCOMING\7-13-01\99680-S02.DWG	JUL. 16, 2001 10:56:10 AM	DIEMT	TO FIT		PLOT
XREF'S: X99680,							

Fed. Aid No.
STPF-4253(010)

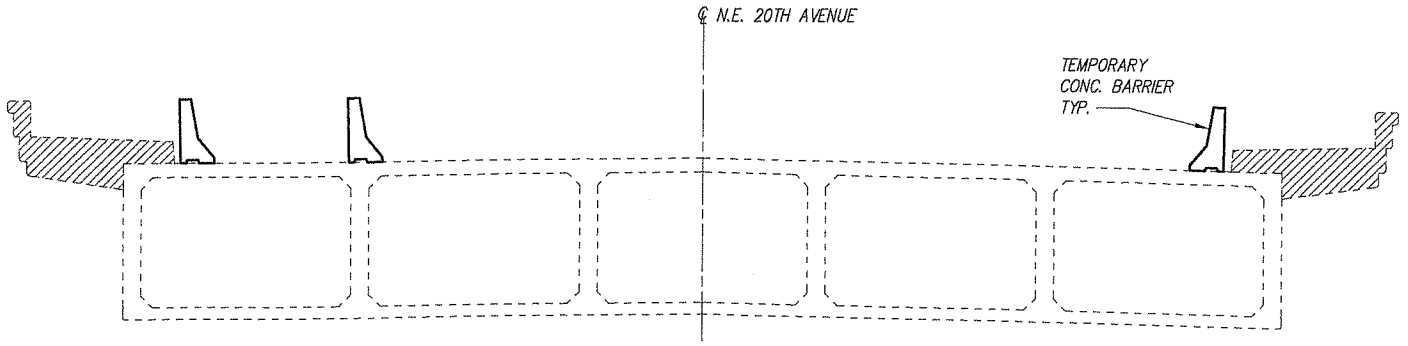

1. PLACE TEMPORARY CONCRETE BARRIERS AND MARK CONSTRUCTION LANES, SEE DWG. S04.
2. ERECT FALSEWORK FOR BOX GIRDER WIDENING.
3. REMOVE PORTIONS OF EXISTING STRUCTURE, AS INDICATED, SEE DWG. S07.

STAGE 1

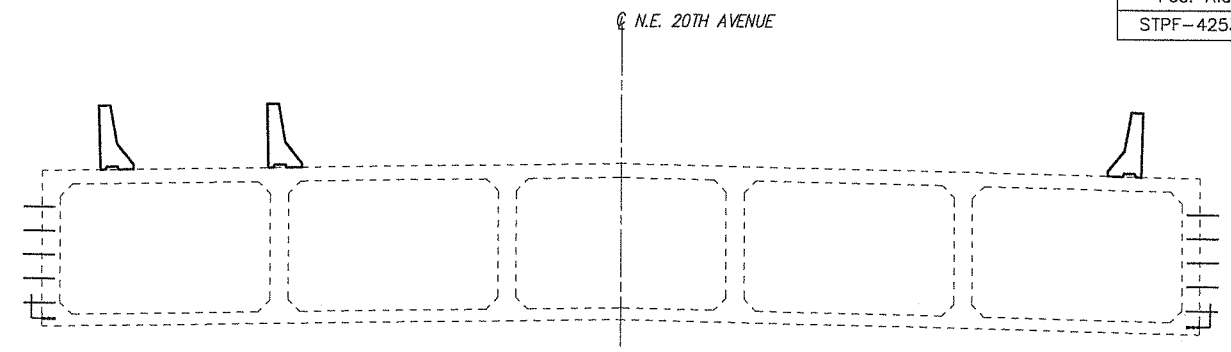

1. DRILL AND INSTALL DOWELS, SEE DWG. S08.

STAGE 2

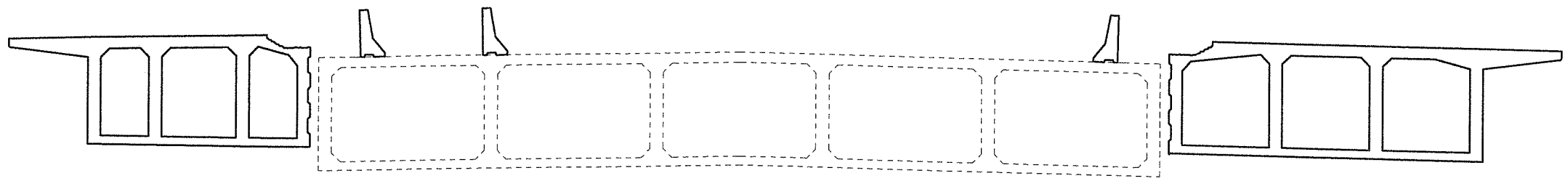

1. CONSTRUCT BOX GIRDER BRIDGE WIDENING, IN CAMBER POSITION, TO MATCH EXISTING CROWN AFTER CLOSURE, SEE DWG. S36.
2. REMOVE FALSEWORK FOR BOX GIRDER WIDENING AFTER CONCRETE STRENGTH HAS REACHED 3,500 PSI.

STAGE 3

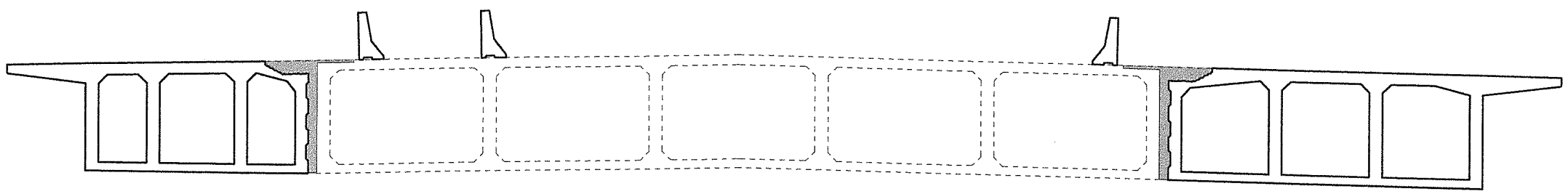

1. WAIT UNTIL SURFACES OF WIDENED AND EXISTING STRUCTURES ARE ALIGNED AT INTERFACE (APPROXIMATELY 2 MONTHS).
2. TIE AND CONNECT CLOSURE REINFORCEMENT AND PLACE CLOSURE CONCRETE.
3. SEE DRAWING T35 FOR TRAFFIC CONTROL GENERAL NOTES DURING CLOSURE.

STAGE 4

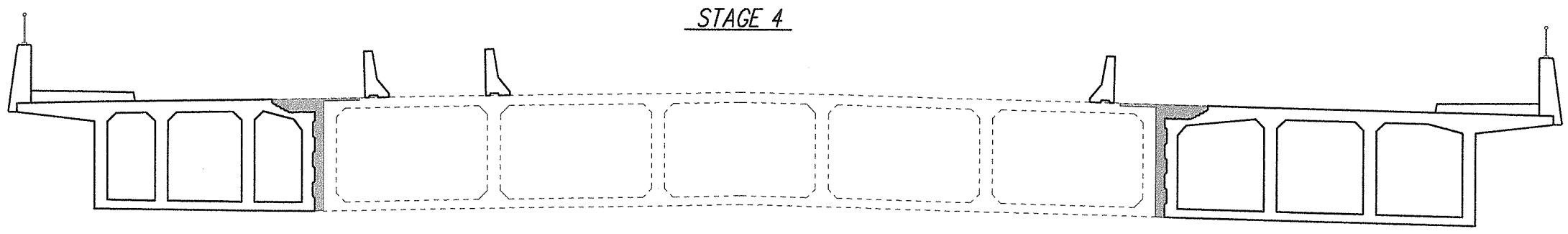

1. CONSTRUCT PEDESTRIAN BARRIERS AND SIDEWALKS.
2. REPLACE EXPANSION JOINTS OF EXISTING BRIDGE, AND FURNISH AND INSTALL EXPANSION JOINTS FOR WIDENING.
3. SEE DRAWING T35 FOR TRAFFIC CONTROL GENERAL NOTES.

STAGE 5

DESIGNED C. TOTTEN
DRAWN J. WILKES
CRP 39922
HOR. N/A
VERT. N/A
DATE FEB. 20, 2004
DWG: S03
SHEET 5 OF 78

CALL 48 HOURS BEFORE YOU DIG 1-800-553-4344 "It's the Law" CLARK COUNTY UTILITIES COORDINATING COUNCIL

DESIGN & ENGINEERING DIVISION

NE 20TH AVE/HGWY 99 REALIG.
CLARK COUNTY
CONSTRUCTION SEQUENCE
PLAN I

STATE OF WASHINGTON TODD H. HASLAM 22285 REGISTERED PROFESSIONAL ENGINEER
EXPIRES 12/8/2004

105 E. Evergreen Blvd., Suite 300
Vancouver, WA 98660-3125
Phone: (360) 750-9483
FAX: (360) 727-5651

olak Incorporated

111 SW 5th Avenue
Suite 2500
Portland, Oregon 97204
503-227-5221

kpff Consulting Engineers

proud past, promising future

CLARK COUNTY
WASHINGTON

JOB #	JOB NAME	FILE PATH & NAME	PLOTTED DATE & TIME	UPDATED BY	PLOT SCALE	'PCP' FILE	PLOT VIEW
99680	N.E. HIGHWAY 99	V:\BRIDGE H-P\N.E. HIGHWAY 99 (99406)\INCOMING\08-03-01\99680-S03.DWG	AUG. 04, 2001 1:33:29 PM	DIEMT	TO FIT		PLOT

XREFS: X99680.

Fed. Aid No.
STPF-4253(010)

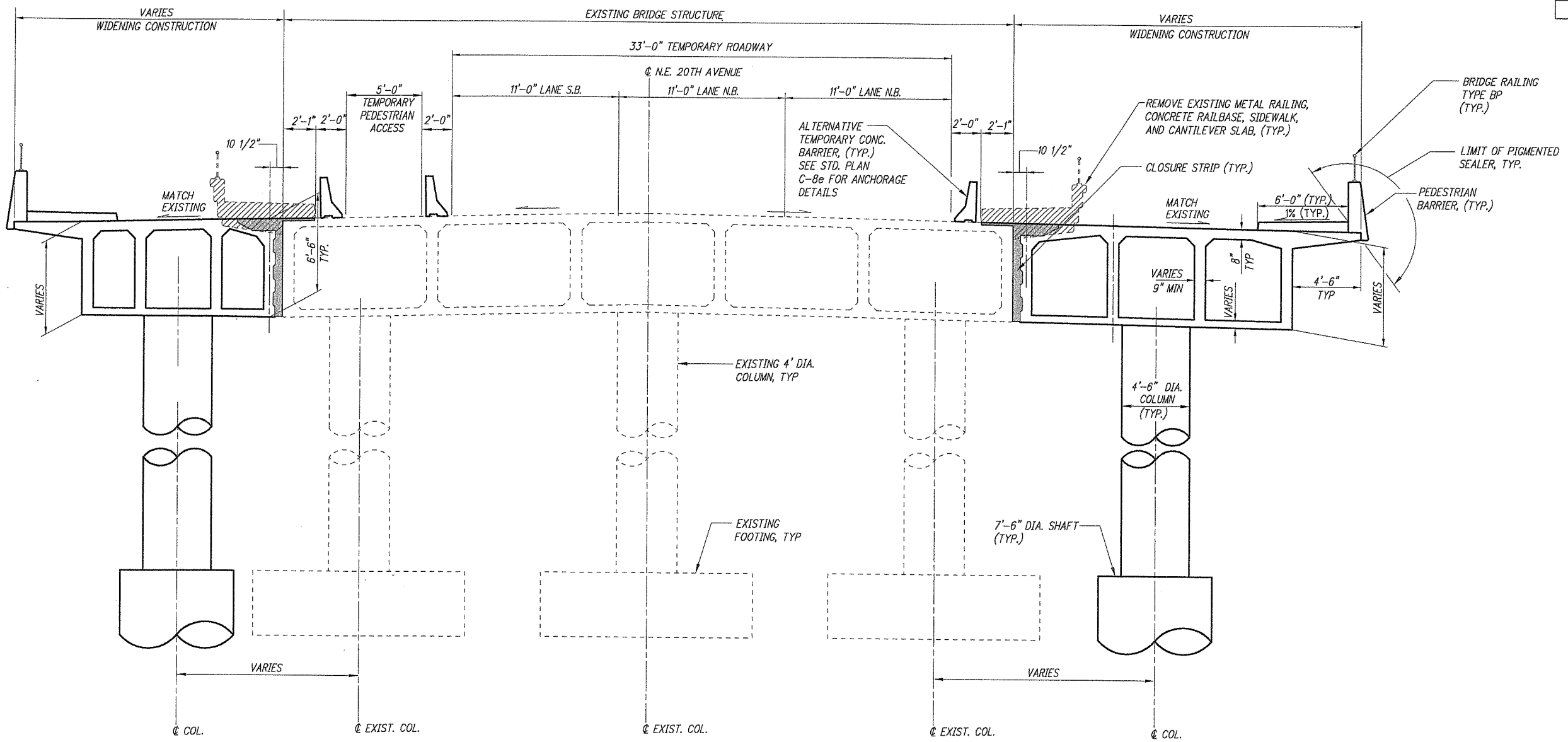

TYPICAL SECTION

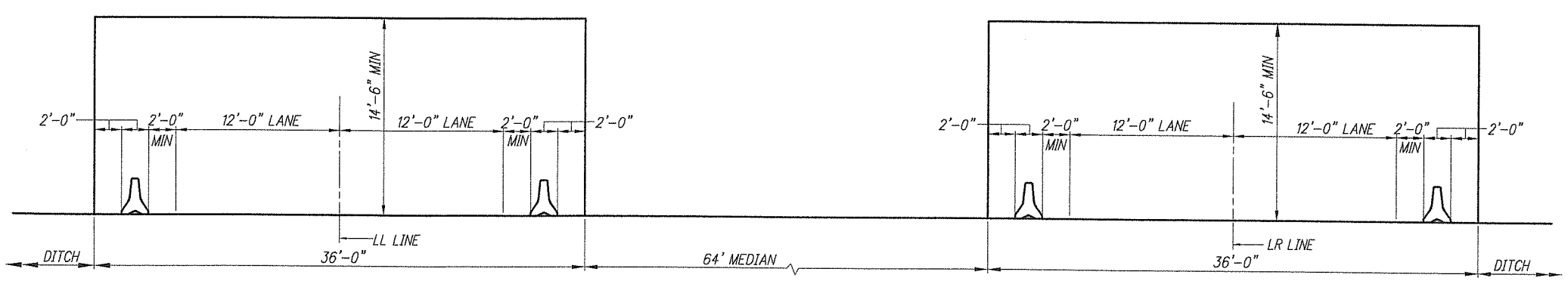

SR 205 CONSTRUCTION OPENING DIAGRAM

DESIGNED C. TOTTEN
DRAWN J. MILKES
CRP 392922
HOR. N/A
VERT. N/A
DATE FEB. 20, 2004
DWG. S04
SHEET 6 OF 78

CALL 48 HOURS BEFORE YOU DIG 1-800-553-4344 "It's the Law" CLARK COUNTY UTILITIES COORDINATING COUNCIL

DESIGN & ENGINEERING DIVISION

NE 20TH AVE/HGWY 99 REALIG.

CLARK COUNTY

CONSTRUCTION SEQUENCE PLAN II

STATE OF WASHINGTON — WILLIAM H. HASLAYER — LICENSED PROFESSIONAL ENGINEER — 21194 — EXPIRES 7/17/2005

otak Incorporated
105 W. Evergreen Blvd., Suite 500
Vancouver, WA 98660-3123
Phone: (360) 737-3613
FAX: (360) 737-9921

kpff Consulting Engineers
111 SW 5th Avenue
Suite 2500
Portland, Oregon 97204
503-227-3251

proud past, promising future

CLARK COUNTY
WASHINGTON

PLOTTED DATE & TIME	UPDATED BY	PLOT SCALE	'PCP' FILE	PLOT VIEW
		1:1		

JOB #	JOB NAME	FILE PATH & NAME
99680	N.E. HIGHWAY 99	D:\2-PROJECTS\99680\99680-S4.DWG

XREFS: X99680,

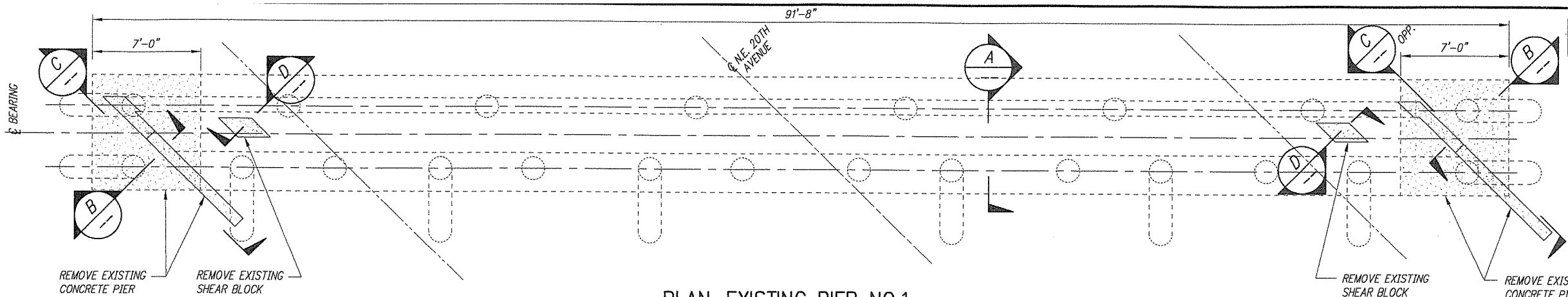

PLAN–EXISTING PIER NO.1

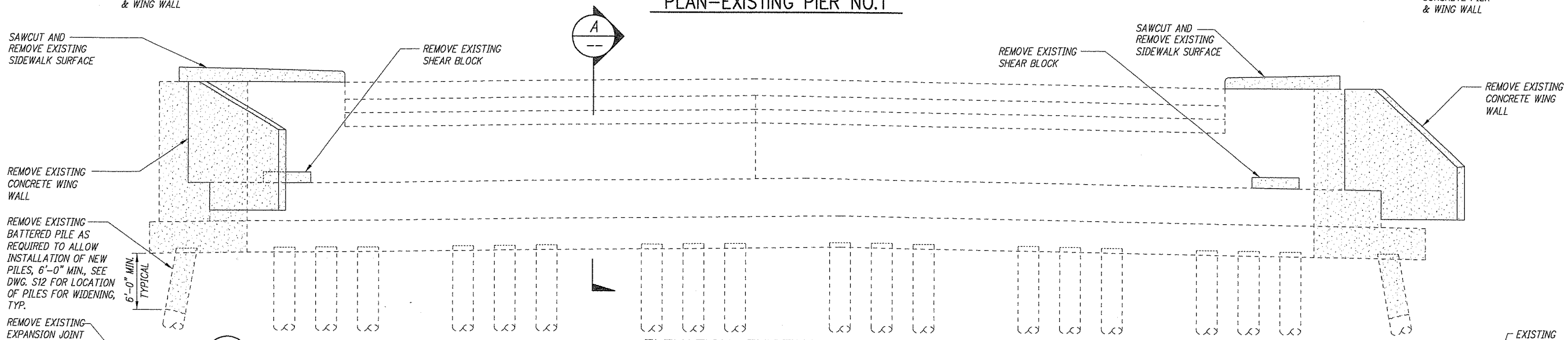

ELEVATION–EXISTING PIER NO.1

LOOKING BACK ON STATION

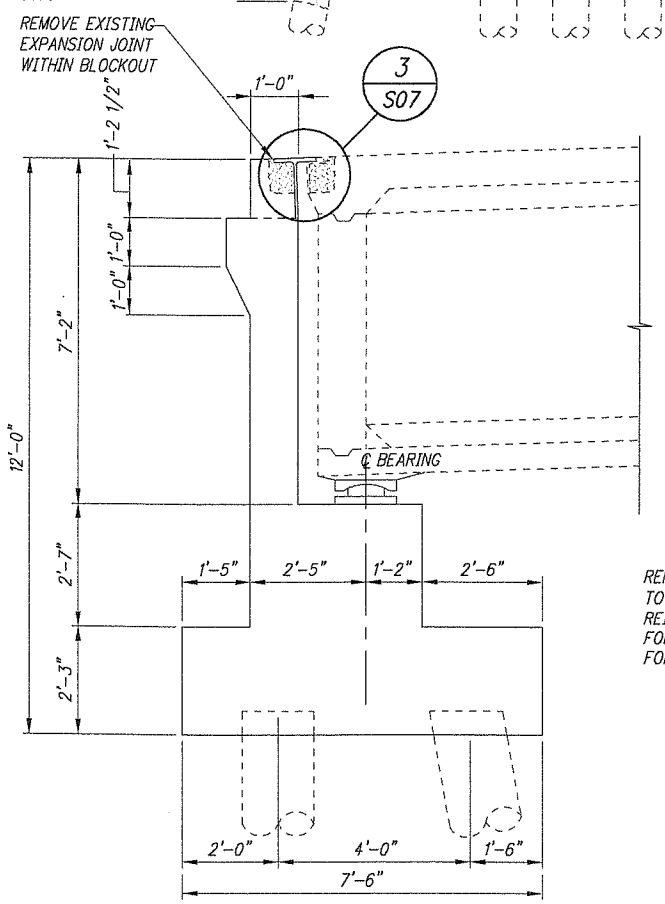

SECTION A

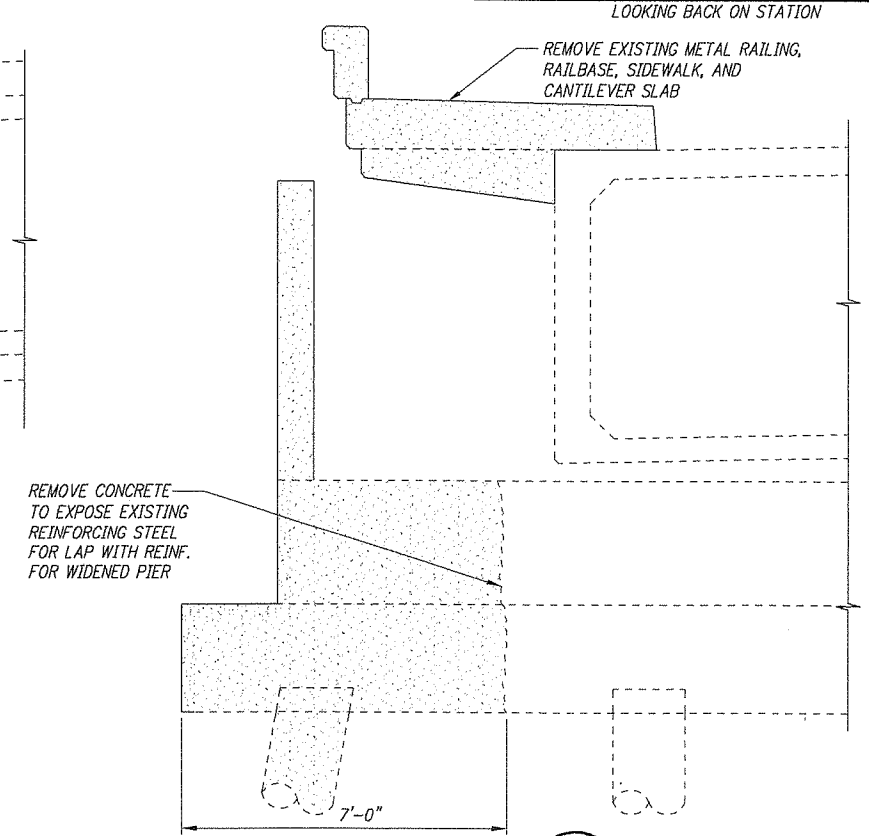

SECTION B

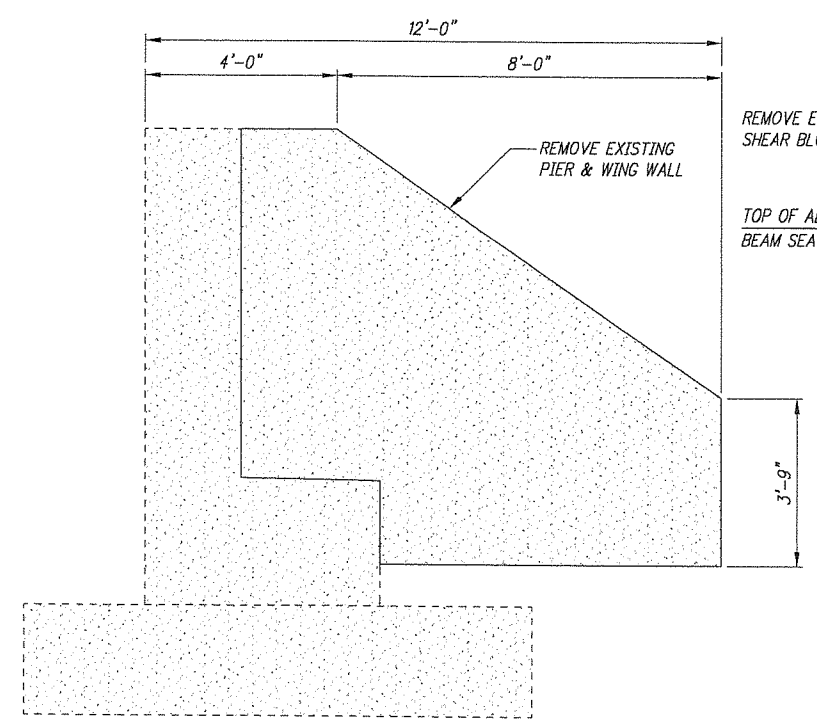

SECTION C

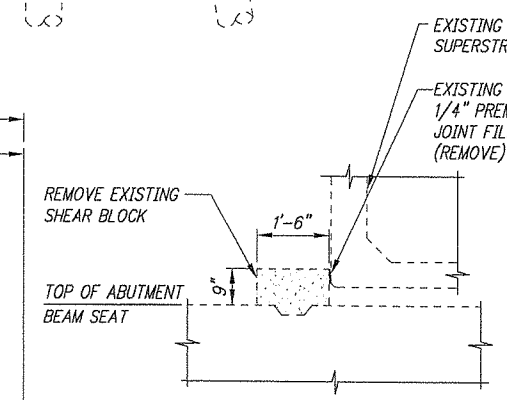

SECTION D

NOTE:
ALL EXISTING REINFORCING AT CONNECTION TO FRESH CONCRETE SHALL BE CLEANED AND LEFT EXPOSED FOR SPLICING WITH PIER 1 WIDENING REINFORCING. REPLACE DAMAGED EXISTING REINFORCING IN–KIND WITH MECHANICAL COUPLERS.

Fed. Aid No.
STPF–4253(010)

DESIGNED C. TOTTEN
DRAWN J. WILKES
CRP 392922
HOR. N/A
VERT. N/A
DATE FEB. 20, 2004
DWG. S05
SHEET 7 OF 78

CALL 48 HOURS BEFORE YOU DIG 1–800–553–4344 "It's the Law" CLARK COUNTY UTILITIES COORDINATING COUNCIL

DESIGN & ENGINEERING DIVISION
NE 20TH AVE/HGWY 99 REALIG.
CLARK COUNTY
EXISTING PIER 1
PARTIAL DEMOLITION DETAILS

STATE OF WASHINGTON — JAY H. HASLYCH — 25925 — REGISTERED PROFESSIONAL ENGINEER
EXPIRES 2/9/2006

otak Incorporated
103 W. Evergreen Blvd., Suite 300, Vancouver, WA 98660–3123, Phone: (360) 737–8515, Fax: (360) 737–8651

kpff Consulting Engineers
111 SW 5th Avenue, Suite 2500, Portland, Oregon 97204, 503–227–3251

proud past, promising future
CLARK COUNTY WASHINGTON

PLOTTED DATE & TIME	UPDATED BY	PLOT SCALE	'PCP' FILE	PLOT VIEW
		TO FIT		PLOT

FILE PATH & NAME: D:\2–PROJECTS\99680\99680–S5.DWG

JOB #	JOB NAME
99680	N.E. HIGHWAY 99

XREFS: X99680,

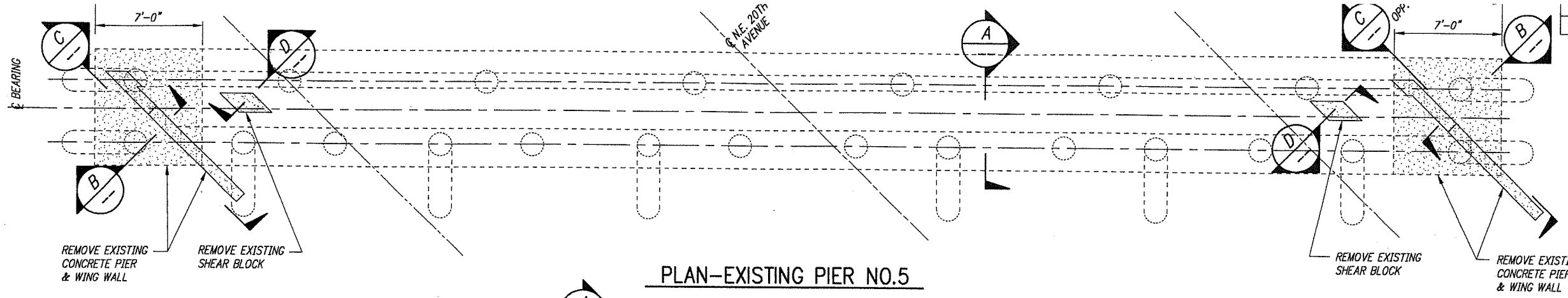

PLAN–EXISTING PIER NO.5

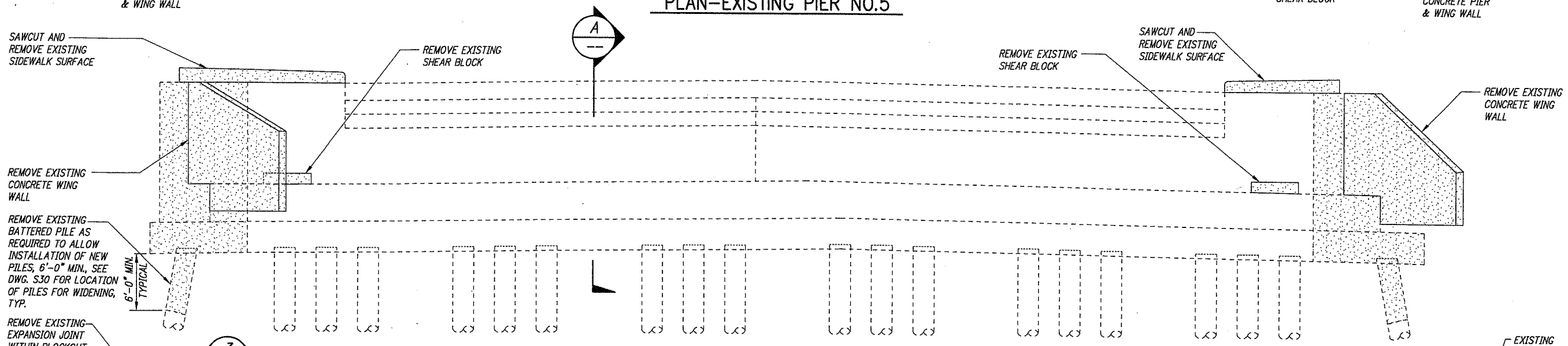

ELEVATION–EXISTING PIER NO.5

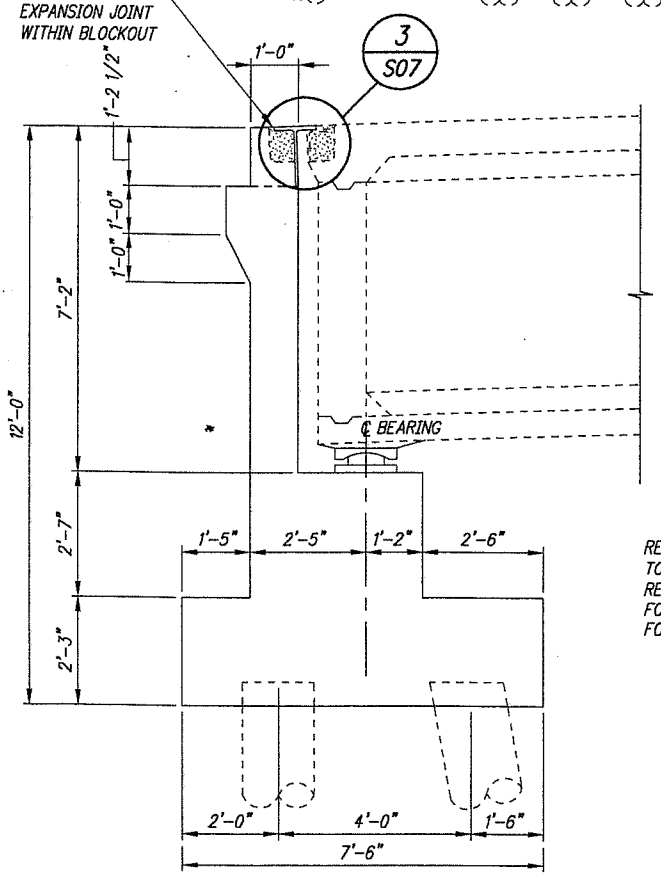

SECTION A

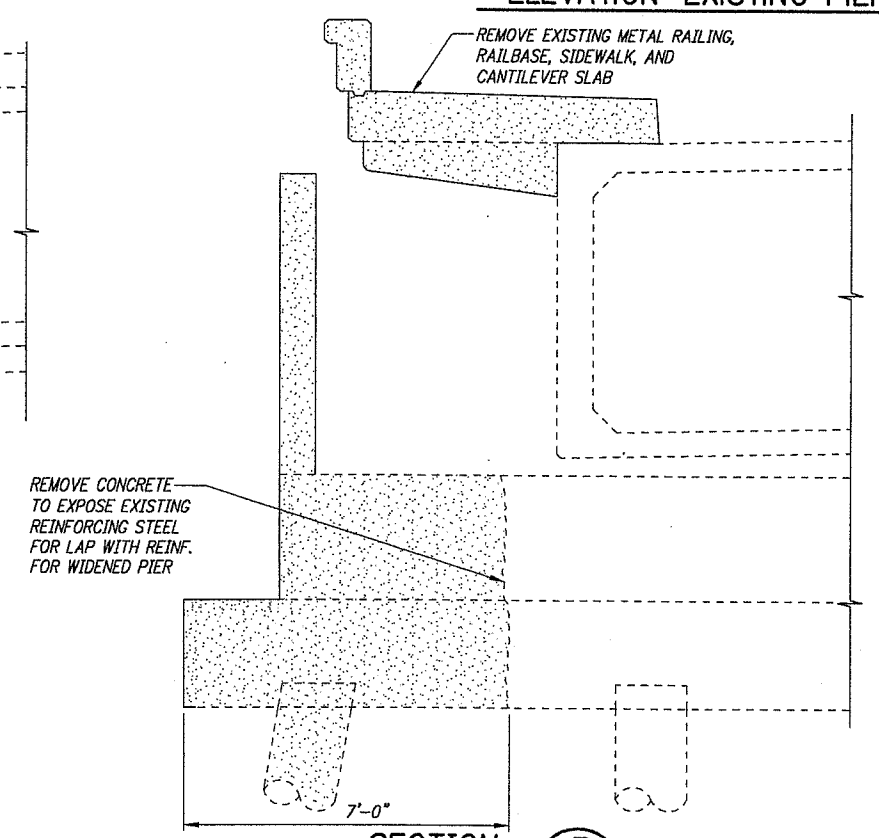

SECTION B

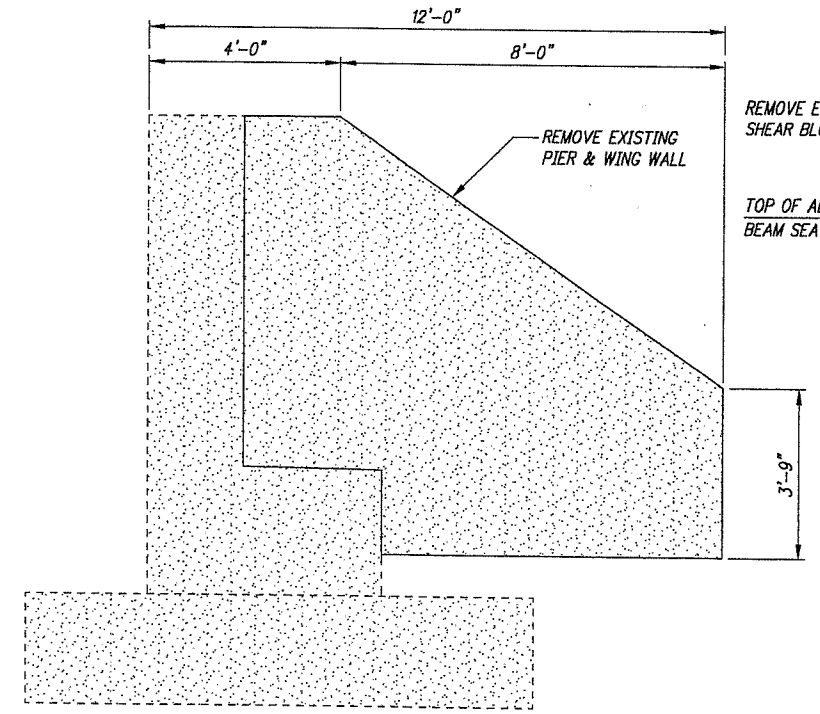

SECTION C

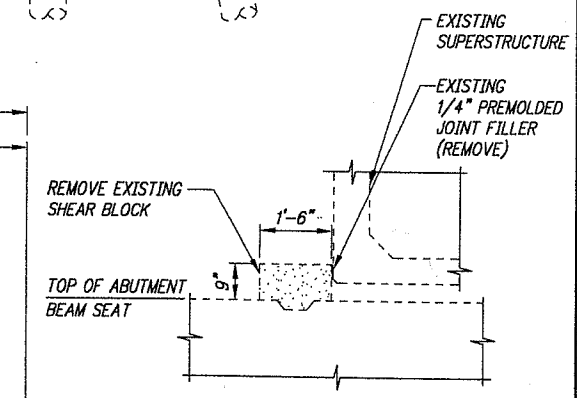

SECTION D

NOTE:
ALL EXISTING REINFORCING AT CONNECTION TO FRESH CONCRETE SHALL BE CLEANED AND LEFT EXPOSED FOR SPLICING WITH PIER 1 WIDENING REINFORCING. REPLACE DAMAGED EXISTING REINFORCING IN–KIND WITH MECHANICAL COUPLERS.

Fed. Aid No.
STPF–4253(010)

DESIGNED C. TOTTEN
DRAWN L. MEKES
CRP 303922
HOR. N/A
VERT. N/A
DATE FEB. 20, 2004
DWG: S06
SHEET 8 OF 78

CALL 48 HOURS BEFORE YOU DIG 1-800-553-4344 "It's the Law" CLARK COUNTY UTILITIES COORDINATING COUNCIL

DESIGN & ENGINEERING DIVISION
NE 20TH AVE/HGWY 99 REALIG.
CLARK COUNTY
EXISTING PIER 5
PARTIAL DEMOLITION DETAILS

STATE OF WASHINGTON
R. H. HASTEN
REGISTERED PROFESSIONAL ENGINEER
EXPIRES: 12/6/2004

otak Incorporated
100 W. Evergreen Blvd., Suite 300
Vancouver, WA 98660-7455
Phone: (360) 737-8613
FAX: (360) 737-9661

kpff Consulting Engineers
S.W. 6th Avenue
Suite 2000
Portland, Oregon 97204
503-227-3251

proud past, promising future
CLARK COUNTY WASHINGTON

PLOT VIEW: PLOT
PLOT FILE:
PLOT SCALE: TO FIT
UPDATED BY:
PLOTTED DATE & TIME:
FILE PATH & NAME: D:\2-PROJECTS\99680\99680-S6.DWG
JOB NAME: N.E. HIGHWAY 99
JOB # 99680
XREFS: X99680,

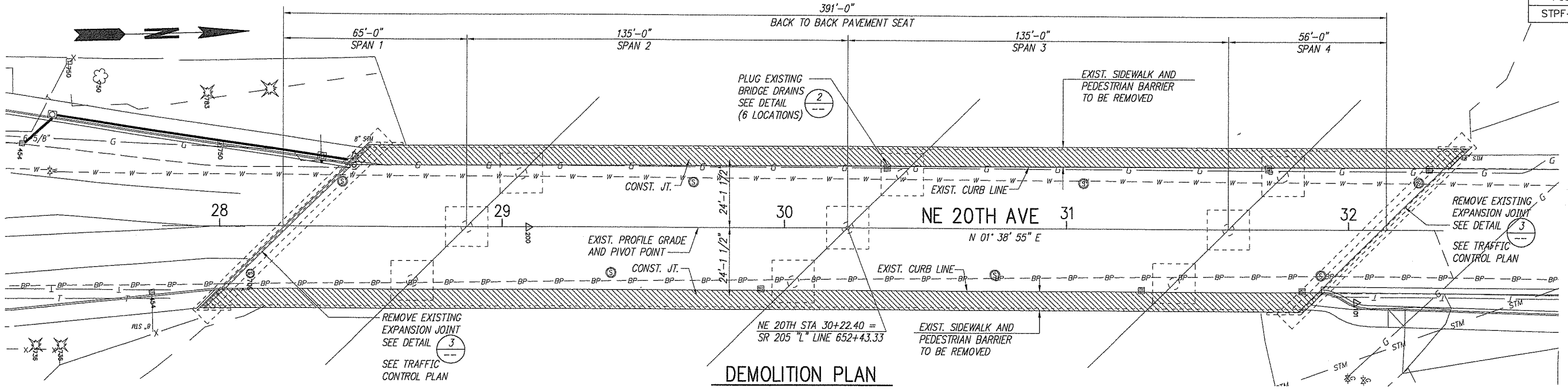

DEMOLITION PLAN

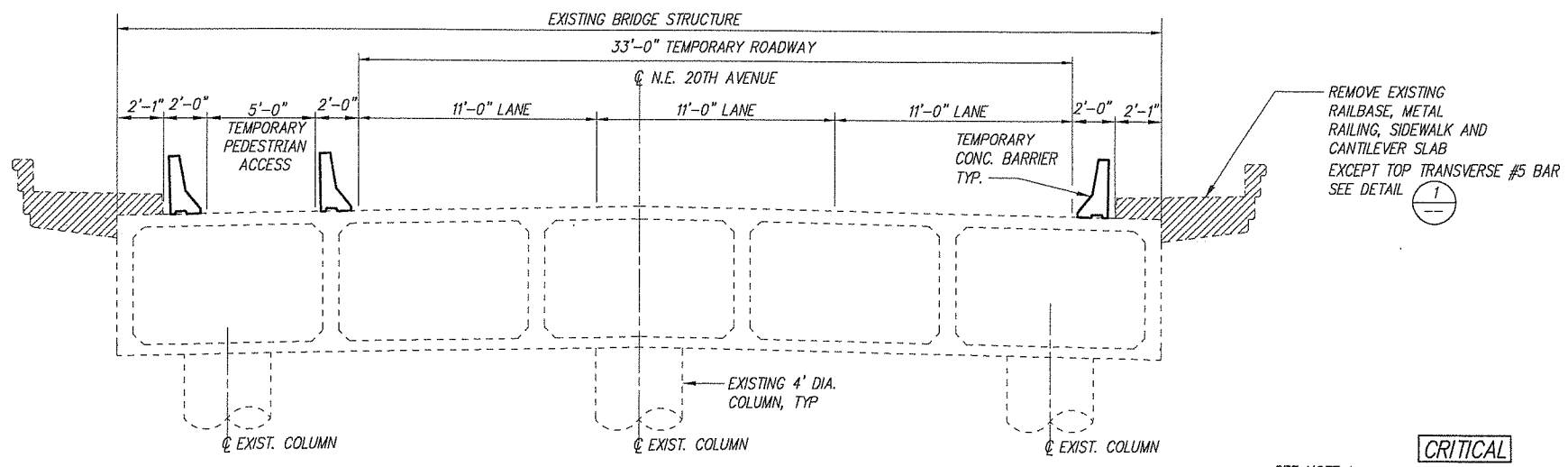

TYPICAL SECTION – EXISTING

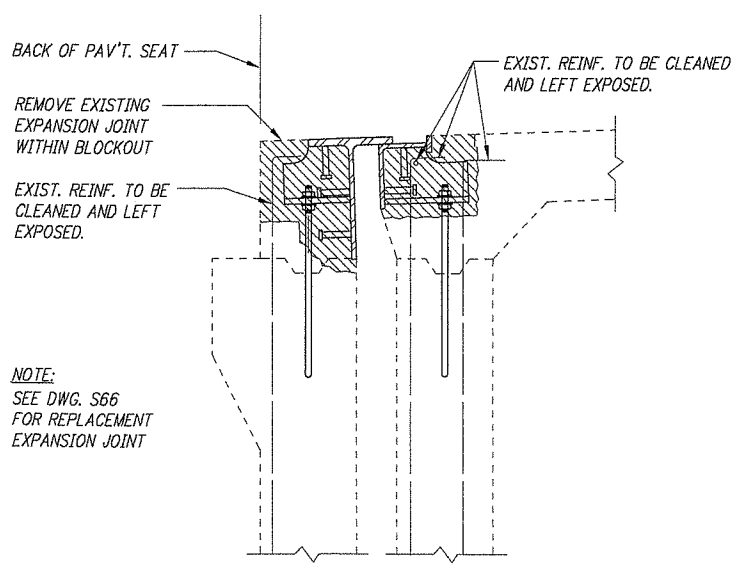

EXISTING EXPANSION JOINT 3 / S05

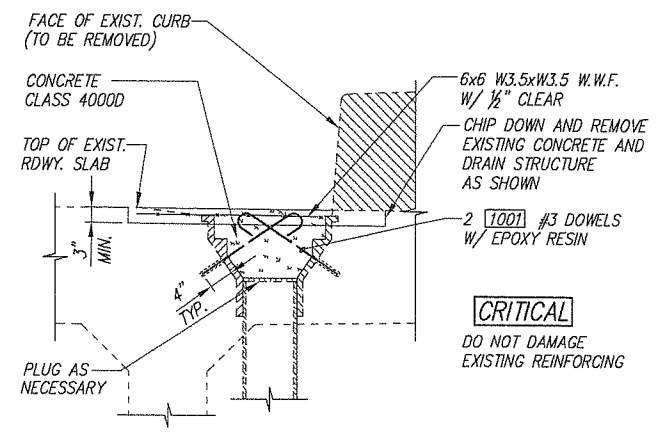

BRIDGE DRAIN PLUG DETAIL 2 / --

(6 LOCATIONS)

REMOVE DRAIN GRATING AND STEEL CHAIN. FILL DRAIN WITH CONCRETE AS APPROVED BY THE ENGINEER AFTER PLUGGING.

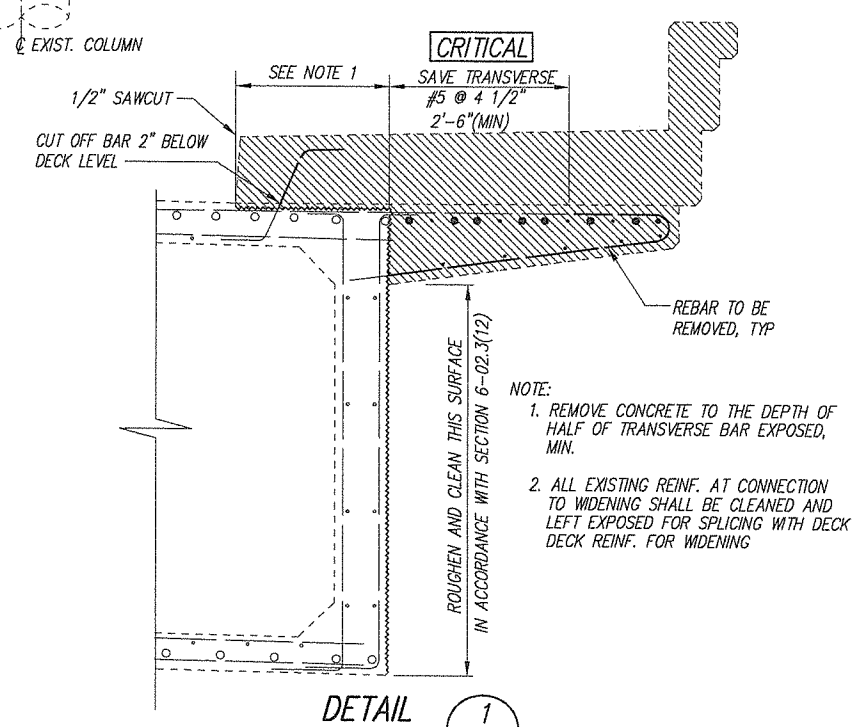

NOTE:
1. REMOVE CONCRETE TO THE DEPTH OF HALF OF TRANSVERSE BAR EXPOSED, MIN.
2. ALL EXISTING REINF. AT CONNECTION TO WIDENING SHALL BE CLEANED AND LEFT EXPOSED FOR SPLICING WITH DECK DECK REINF. FOR WIDENING

DETAIL 1 / --

Fed. Aid No.
STPF-4253(010)

DESIGNED C. TOTTEN
DRAWN L. WILKES
CRP 392922
HOR. N/A
VERT. N/A
DATE FEB. 20, 2004
DWG: S07
SHEET 9 OF 78

CALL 48 HOURS BEFORE YOU DIG 1-800-553-4344 "It's the Law" CLARK COUNTY UTILITIES COORDINATING COUNCIL

DESIGN & ENGINEERING DIVISION

NE 20TH AVE/HGWY 99 REALIG.
CLARK COUNTY
EXISTING BRIDGE BARRIER AND DECK DEMOLITION DETAILS

STATE OF WASHINGTON — TIMOTHY R. HAGEMAN — 22384 — PROFESSIONAL ENGINEER — EXPIRES 2/9/2006

otak Incorporated
105 W. Evergreen Blvd., Suite 300
Vancouver, WA 98660-3123
Phone: (360) 737-8613
FAX: (360) 737-8651

kpff Consulting Engineers
111 SW 5th Avenue
Suite 2500
Portland, Oregon 97204
503-227-3251

proud past, promising future
CLARK COUNTY WASHINGTON

PLOTTED DATE & TIME	UPDATED BY	PLOT SCALE	'PCP' FILE	PLOT VIEW
JUN. 29, 2001 11:35:34 AM	ALINAE	1=1	---	

JOB #	JOB NAME	FILE PATH & NAME
99680	N.E. 20th Ave Highway 99	V:\BRIDGE H-P\N.E. HIGHWAY 99 (99406)\DESIGN\99680-S07.DWG

XREFS: XMSP1, XSURV, NE99XRW, XBRIDGE, X99680,

Fed. Aid No.
STPF-4253(010)

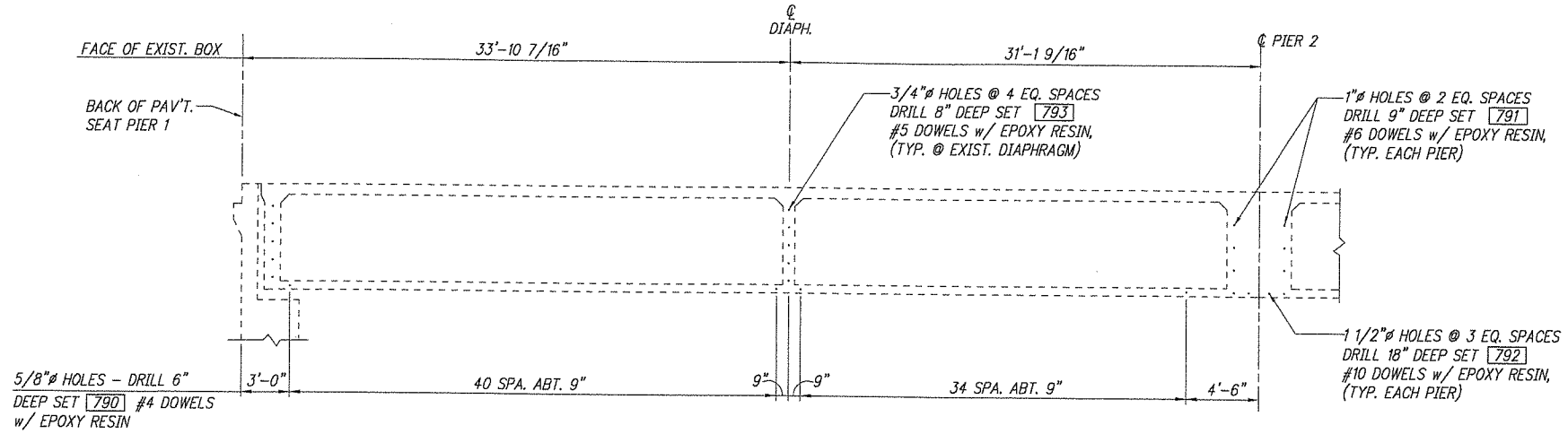

SPAN 1 - EXISTING STRUCTURE

EAST ELEVATION SHOWN, WEST ELEVATION IS OPPOSITE

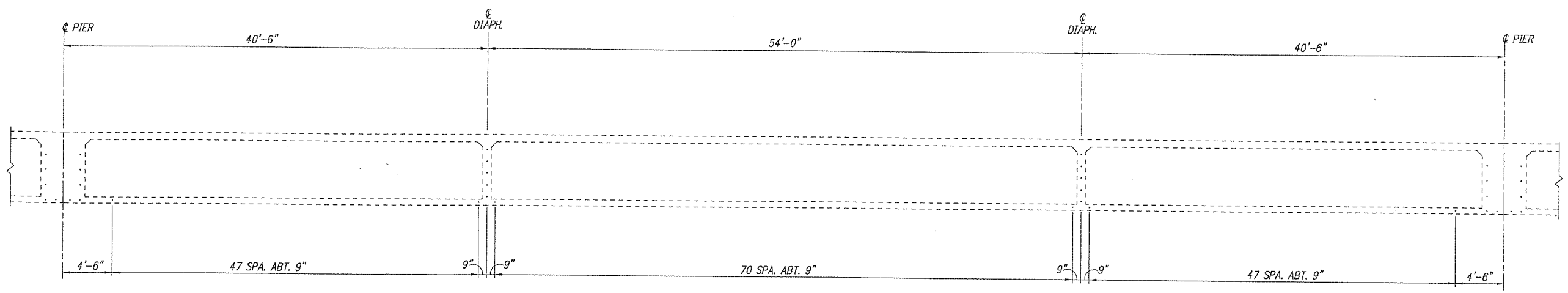

SPAN 2 AND 3 - EXISTING STRUCTURE

EAST ELEVATION SHOWN, WEST ELEVATION IS OPPOSITE

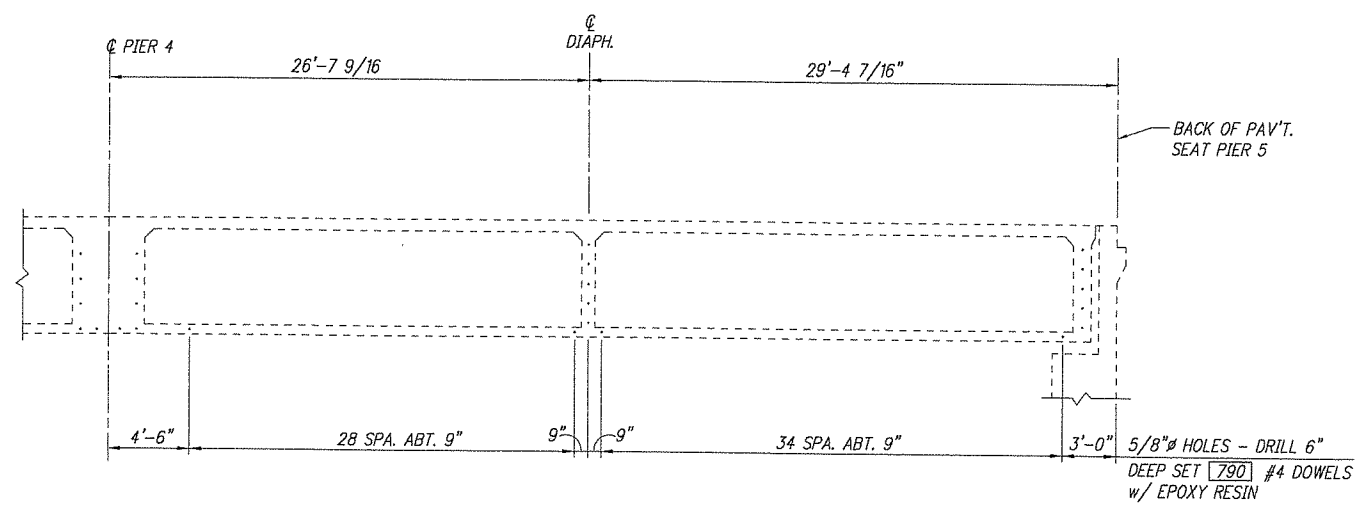

SPAN 4 - EXISTING STRUCTURE

EAST ELEVATION SHOWN, WEST ELEVATION IS OPPOSITE

NOTE:
SEE DWG S62 FOR BRIDGE DECK CLOSURE DETAILS.

DESIGNED C. TOTTEN
DRAWN J. WILKES
CRP 392922
HOR. N/A
VERT. N/A
DATE FEB. 20, 2004
DWG: S08
SHEET 10 OF 78

CALL 48 HOURS BEFORE YOU DIG 1-800-553-4344 "It's the Law" CLARK COUNTY UTILITIES COORDINATING COUNCIL

DESIGN & ENGINEERING DIVISION
NE 20TH AVE/HGWY 99 REALIG.
CLARK COUNTY
DRILLING DETAILS

STATE OF WASHINGTON
JOSEPH H. HOSLAYER
STATE OF WASHINGTON
REGISTERED PROFESSIONAL ENGINEER
EXPIRES 2/12/2005

105 N. Evergreen Blvd., Suite 500
Vancouver, WA 98660-3123
Phone: (360) 737-8615
FAX: (360) 737-9681

otak Incorporated

kpff Consulting Engineers
111 SW 5th Avenue
Suite 2500
Portland, Oregon 97204
503-227-3251

proud past, promising future
CLARK COUNTY
WASHINGTON

PLOTTED DATE & TIME	UPDATED BY	PLOT SCALE	'PCP' FILE	PLOT VIEW
		TO FIT		PLOT

JOB #	JOB NAME	FILE PATH & NAME
99680	N.E. HIGHWAY 99	D:\2-PROJECTS\99680\99680-S54.DWG

XREFS: X99680,

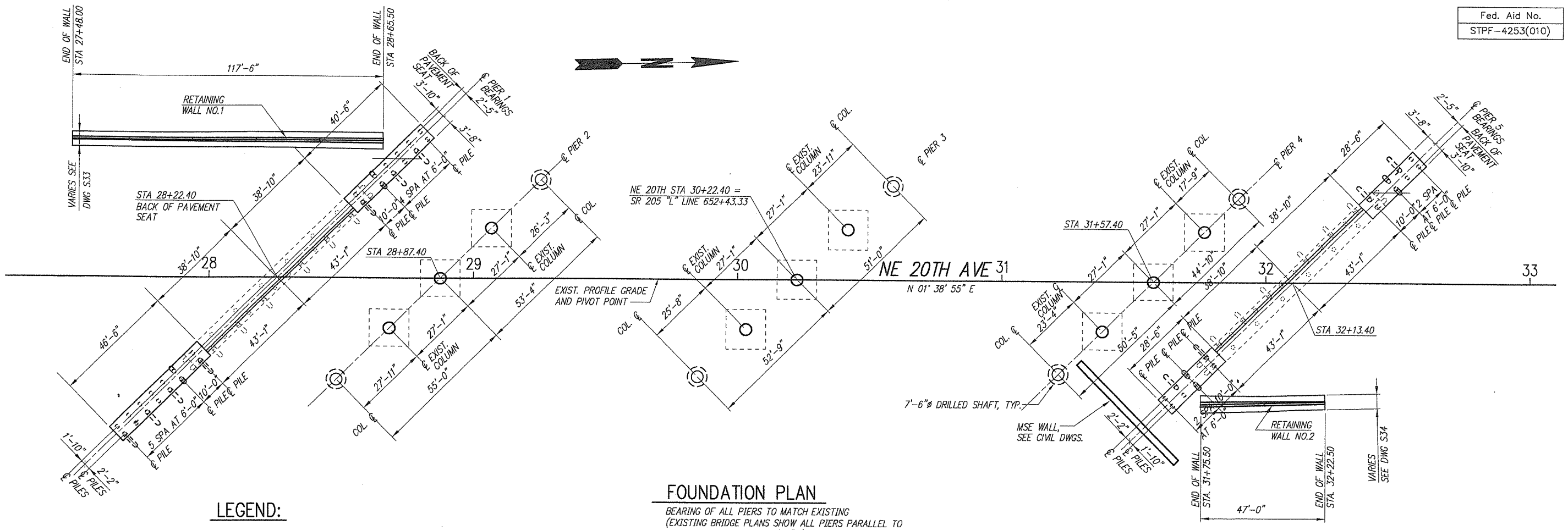

Fed. Aid No.
STPF-4253(010)

FOUNDATION PLAN

BEARING OF ALL PIERS TO MATCH EXISTING
(EXISTING BRIDGE PLANS SHOW ALL PIERS PARALLEL TO PIER 3: BEARING N 42°53'40"W)
ALL DIMENSIONS BETWEEN EXISTING BRIDGE AND WIDENING SHALL BE FIELD VERIFIED BY THE CONTRACTOR.

LEGEND:

1. INDICATES VERTICAL 18" DIA. CONCRETE PILE
3. INDICATES 18" DIA. CONCRETE PILE AT 1H : 12V BATTER
4. INDICATES 18" DIA. CONCRETE BATTERED PILE AT 3H : 12V BATTER
5. INDICATES 7'-6" DIA. DRILLED SHAFT
6. INDICATES EXISTING CONCRETE COLUMN AND PILE CAP WITH STEEL COLUMN JACKET ON EXISTING COLUMN, SEE DWG. S68.
7. INDICATES EXISTING VERTICAL PILE
8. INDICATES EXISTING BATTERED PILE

DESIGNED C. TOTTEN
DRAWN J. WILKES
CRP 39322
HOR. N/A
VERT. N/A
DATE FEB. 20, 2004
DWG: S09
SHEET 11 OF 78

CALL 48 HOURS BEFORE YOU DIG 1-800-553-4344 "It's the Law" CLARK COUNTY UTILITIES COORDINATING COUNCIL

DESIGN & ENGINEERING DIVISION
NE 20TH AVE/HGWY 99 REALIG.
CLARK COUNTY
FOUNDATION PLAN

STATE OF WASHINGTON JAMES R. HAGEN 19322 REGISTERED PROFESSIONAL ENGINEER
EXPIRES 2/10/2006

otak Incorporated
105 N. Evergreen Blvd., Suite 300
Vancouver, WA 98660-3123
Phone: (360) 737-8613
FAX: (360) 737-9651

kpff Consulting Engineers
111 SW 5th Avenue
Suite 2500
Portland, Oregon 97204
503-227-3251

proud past, promising future
CLARK COUNTY WASHINGTON

JOB #	JOB NAME	FILE PATH & NAME
99680	N.E. HIGHWAY 99	D:\2-PROJECTS\99680\99680-S9.DWG

XREFS: MSP1A, XSURV, XBRIDGE, X99680,

PLOTTED DATE & TIME	UPDATED BY	PLOT SCALE	'PCP' FILE	PLOT VIEW
		1:1		

Fed. Aid No.
STPF-4253(010)

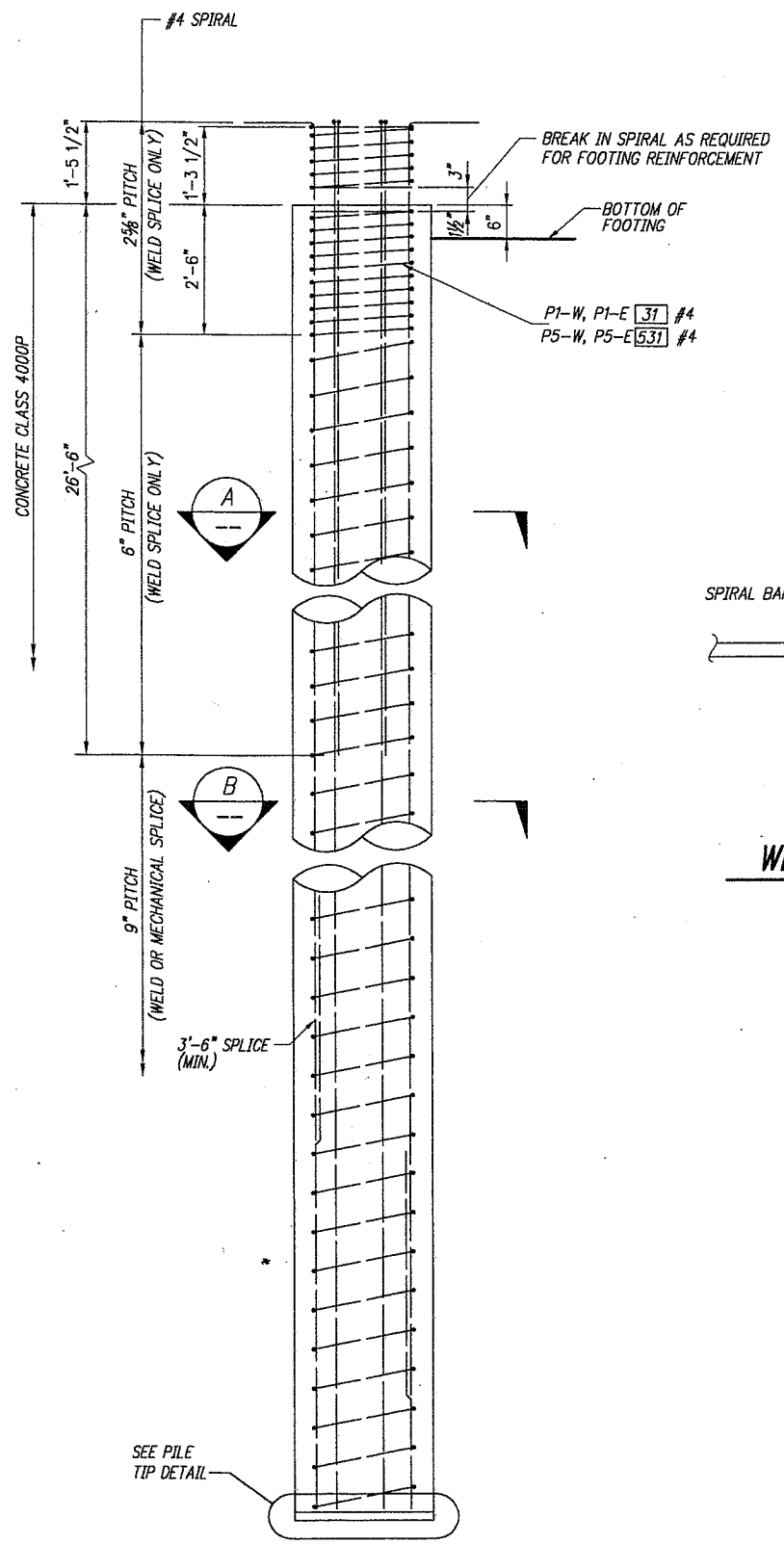

18" DIA. CONCRETE PILE

FOR PIER 1 & 5

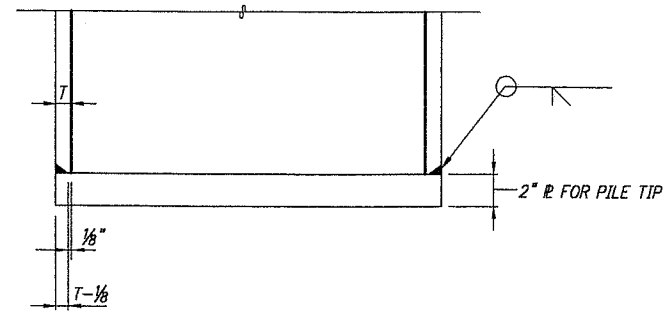

PILE TIP DETAIL

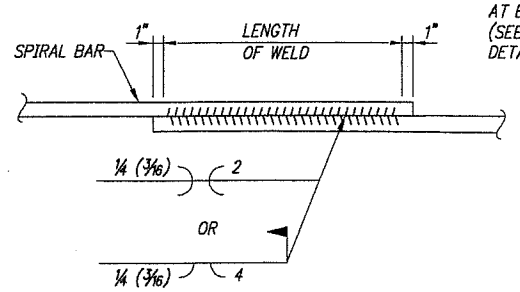

WELDED SPIRAL SPLICE DETAIL

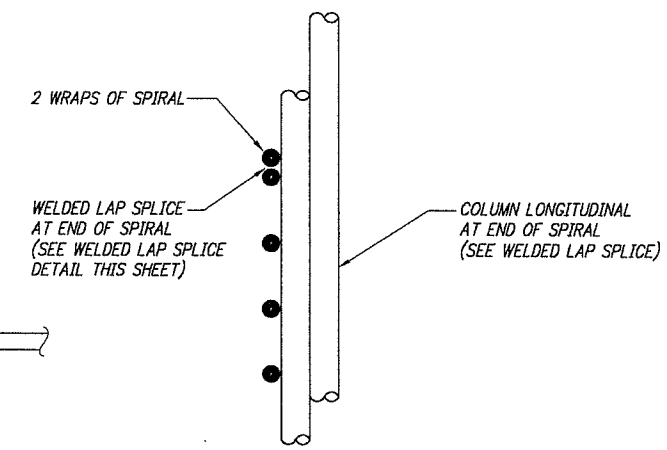

SPIRAL TERMINATION DETAIL

TYPICAL AT ALL DISCONTINUOUS ENDS OF SPIRALS

NOTES ON SPIRALS:

1. SPIRALS MAY BE FABRICATED FROM #4 DEFORMED REINFORCING BARS (AASHTO M31 GR. 60), PLAIN SMOOTH BARS 1/2" ø (AASHTO M31 GR. 60), DEFORMED WIRE D20 (AASHTO M225), OR COLD DRAWN WIRE W20 (AASHTO M32).
2. WELDED SPLICES ONLY, EXCEPT AS NOTED.
3. TERMINATE SPIRALS WITH 1 1/2 TURNS MIN. AND WELD AS PER WELDED SPIRAL SPLICE DETAIL AND SPIRAL TERMINATION DETAIL.

PILE BAR LIST

ALL REINFORCING SHALL BE AASHTO M31, GR 60

PIER 1 – WEST

# OF PILES REQUIRED	MARK	BAR SIZE	NO.	LENGTH (FT.) PER PILE	BEND TYPE	WT (LBS.) PER PILE	WT (LBS.) PER PIER
12	28	8	6	176.00	90° HOOK	470	5640
	29	8	6	248.00	90° HOOK	662	7944
	30	8	6	256.00	STRAIGHT	684	8208
	31	4	1	67.92	SPIRAL	45	540
	32	4	1	176.58	SPIRAL	118	1416
	33	4	1	271.42	SPIRAL	181	2172

PIER 1 – EAST

# OF PILES REQUIRED	MARK	BAR SIZE	NO.	LENGTH (FT.) PER PILE	BEND TYPE	WT (LBS.) PER PILE	WT (LBS.) PER PIER
14	28	8	6	176.00	90° HOOK	470	6580
	29	8	6	248.00	90° HOOK	662	9268
	30	8	6	256.00	STRAIGHT	684	9576
	31	4	1	67.92	SPIRAL	45	630
	32	4	1	176.58	SPIRAL	118	1652
	33	4	1	271.42	SPIRAL	181	2534

PIER 5 – WEST

# OF PILES REQUIRED	MARK	BAR SIZE	NO.	LENGTH (FT.) PER PILE	BEND TYPE	WT (LBS.) PER PILE	WT (LBS.) PER PIER
8	528	8	6	176.00	90° HOOK	470	3760
	529	8	6	248.00	90° HOOK	662	5296
	530	8	6	218.00	STRAIGHT	582	4656
	531	4	1	67.92	SPIRAL	45	360
	532	4	1	176.58	SPIRAL	118	944
	533	4	1	237.00	SPIRAL	158	1264

PIER 5 – EAST

# OF PILES REQUIRED	MARK	BAR SIZE	NO.	LENGTH (FT.) PER PILE	BEND TYPE	WT (LBS.) PER PILE	WT (LBS.) PER PIER
8	528	8	6	176.00	90° HOOK	470	3760
	529	8	6	248.00	90° HOOK	662	5296
	530	8	6	218.00	STRAIGHT	582	4656
	531	4	1	67.92	SPIRAL	45	360
	532	4	1	176.58	SPIRAL	118	944
	533	4	1	237.00	SPIRAL	158	1264

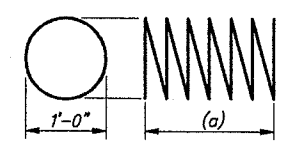

(a) – DETERMINED FROM PLANS

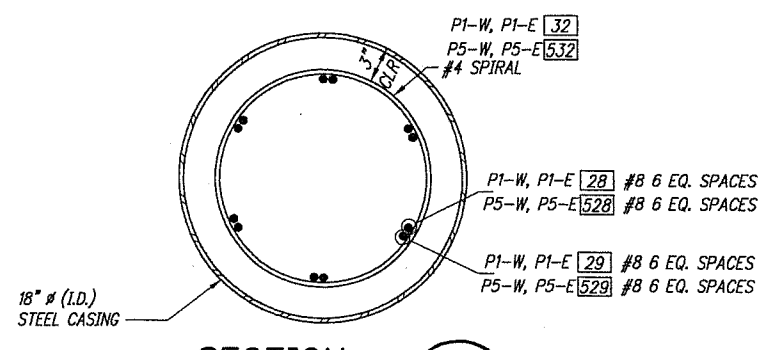

SECTION A

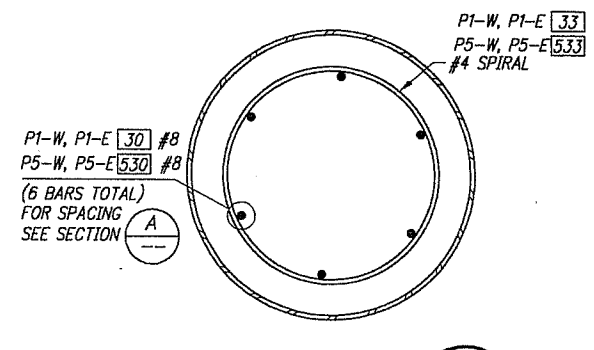

SECTION B

NOTE:
P1-W = PIER 1 WEST ADDITION
P1-E = PIER 1 EAST ADDITION
P5-W = PIER 5 WEST ADDITION
P5-E = PIER 5 EAST ADDITION

DESIGNED C. TOTTEN
DRAWN J. WILKES
CRP 303922
HOR. N/A
VERT. N/A
DATE FEB. 20, 2004
DWG: S10
SHEET 12 OF 78

CALL 48 HOURS BEFORE YOU DIG 1-800-553-4344 "It's the Law" CLARK COUNTY UTILITIES COORDINATING COUNCIL

DESIGN & ENGINEERING DIVISION
NE 20TH AVE/HGWY 99 REALIG.
CLARK COUNTY
PILING DETAILS

STEVEN B. HASKINS STATE OF WASHINGTON 18401 REGISTERED PROFESSIONAL ENGINEER
EXPIRES 12/8/2006

otak Incorporated
105 W. Evergreen Blvd., Suite 300
Vancouver, WA 98660-3253
Phone: (360) 737-8053
FAX: (360) 737-9651

kpff Consulting Engineers
111 SW 5th Avenue
Suite 2500
Portland, Oregon 97204
(503) 227-3251

proud past, promising future
CLARK COUNTY WASHINGTON

99680 | N.E. HIGHWAY 99 | V:\BRIDGE H-P\N.E. HIGHWAY 99 (99406)\INCOMING\7-13-01\99680-S10.DWG JUL. 16, 2001 10:47:41 AM | DIEMT | TO FIT | PLOT
XREF'S: XMSP1, XSURV, NE99XRW, XBRIDGE, X99680,

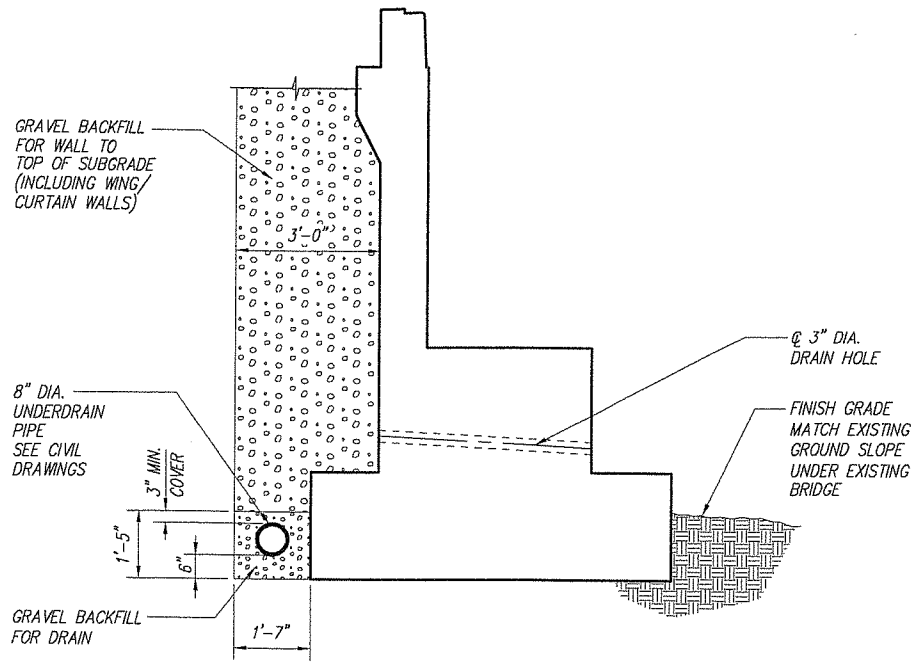

DRAINAGE DETAIL

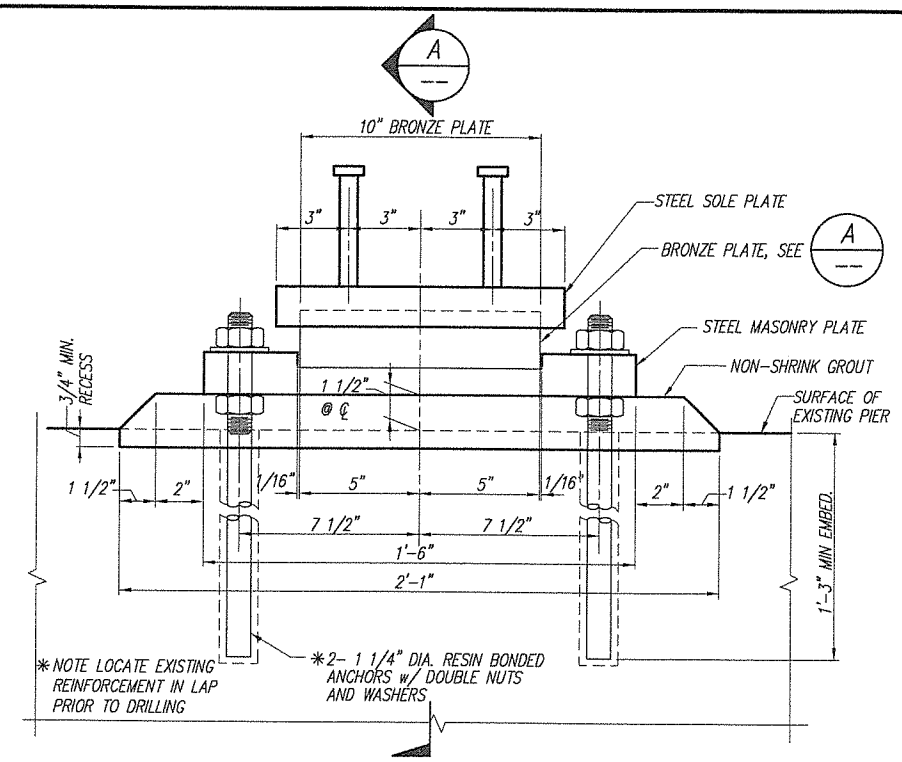

BEARING PLATE ASSEMBLY

(MOUNTED TO SURFACE OF EXISTING PIER)

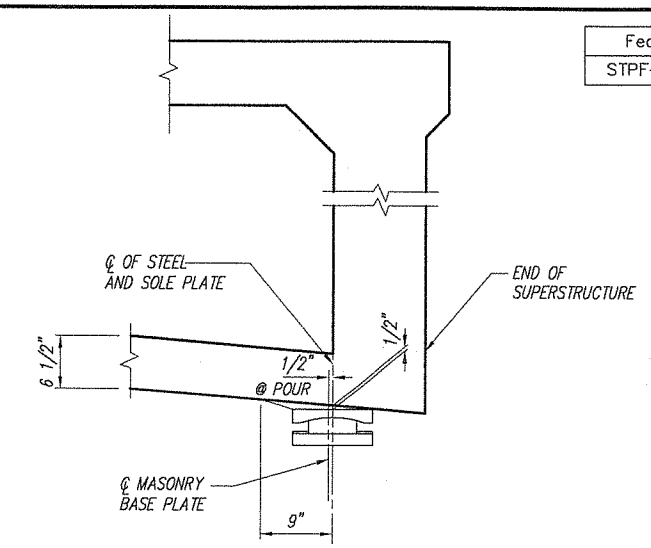

SECTION B–B

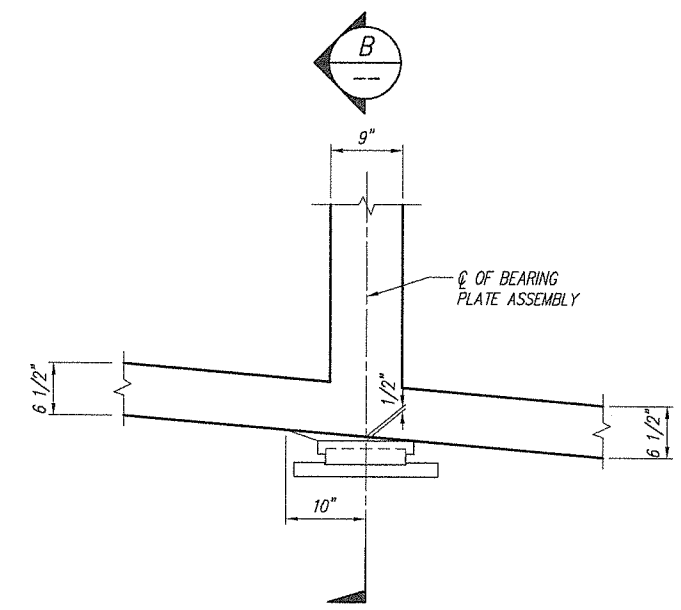

BEAM BUILDUP AT BEARING ASSEMBLY

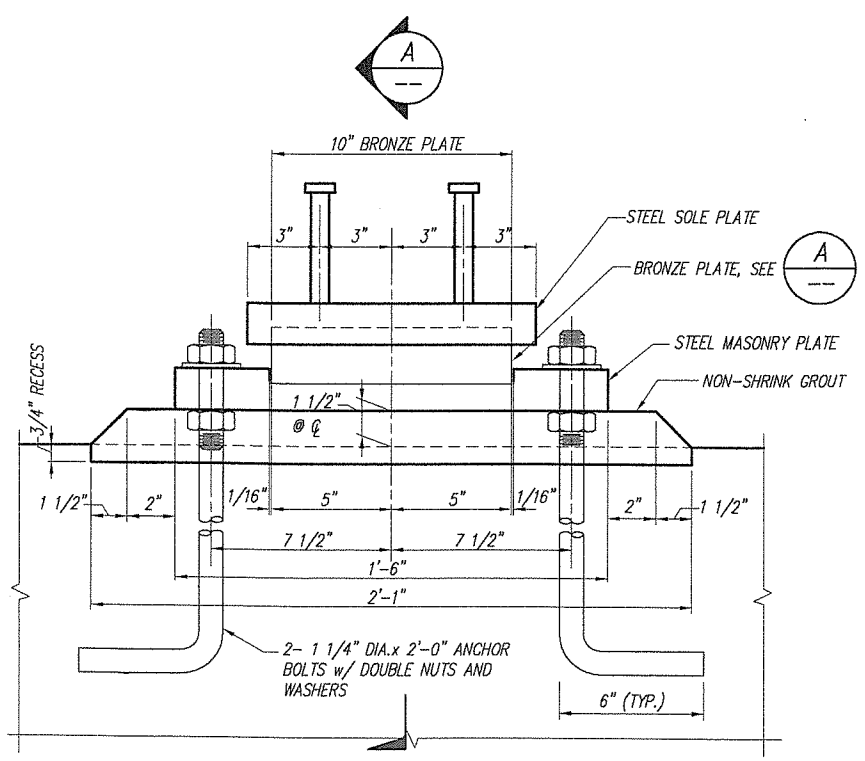

BEARING PLATE ASSEMBLY

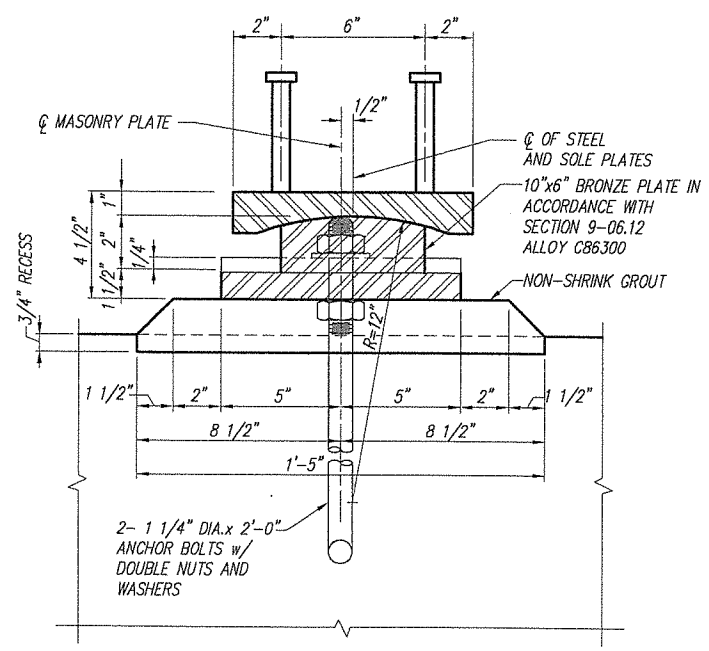

SECTION A

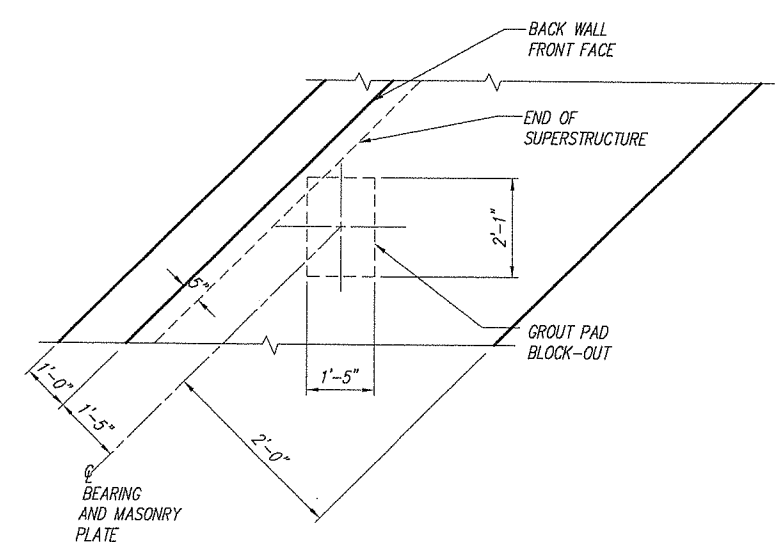

PLAN BEARING SEAT

Fed. Aid No.
STPF-4253(010)

DESIGNED C. TOTTEN
DRAWN J. WILKES
CRP 392822
HOR. N/A
VERT. N/A
DATE FEB. 20, 2004
DWG: S11
SHEET 13 OF 78

CALL 48 HOURS BEFORE YOU DIG 1-800-553-4344 "It's the Law" CLARK COUNTY UTILITIES COORDINATING COUNCIL

DESIGN & ENGINEERING DIVISION

NE 20TH AVE/HGWY 99 REALIG.
CLARK COUNTY
BEARING & MISC. DETAILS

STATE OF WASHINGTON — STEVEN H. HASLAM — REGISTERED PROFESSIONAL ENGINEER — 21191
EXPIRES 2/19/2005

otak Incorporated — 105 E. Evergreen Blvd., Suite 300, Vancouver, WA 98660-3123, Phone: (360) 737-8513, FAX: (360) 737-9931

kpff Consulting Engineers — 111 SW 5th Avenue, Suite 2500, Portland, Oregon 97204, 503-227-3251

proud past, promising future

CLARK COUNTY WASHINGTON

JOB #	JOB NAME	FILE PATH & NAME	PLOTTED DATE & TIME	UPDATED BY	PLOT SCALE	'PCP' FILE	PLOT VIEW
99680	N.E. 20 th AVE HIGHWAY 99	V:\BRIDGE H-P\N.E. HIGHWAY 99 (99406)\DESIGN\99680-S66.DWG	JUN. 29, 2001 11:41:27 AM	ALINAE	1:1 (1:2)		PLOT

XREFS: X99680,

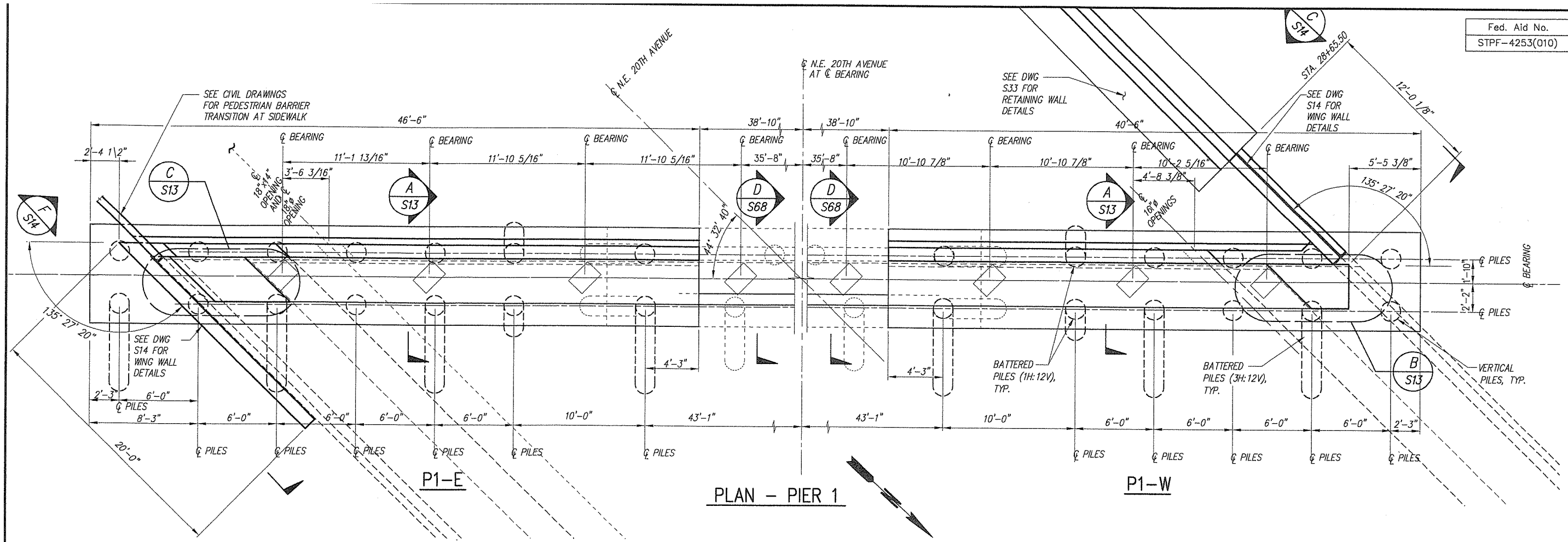

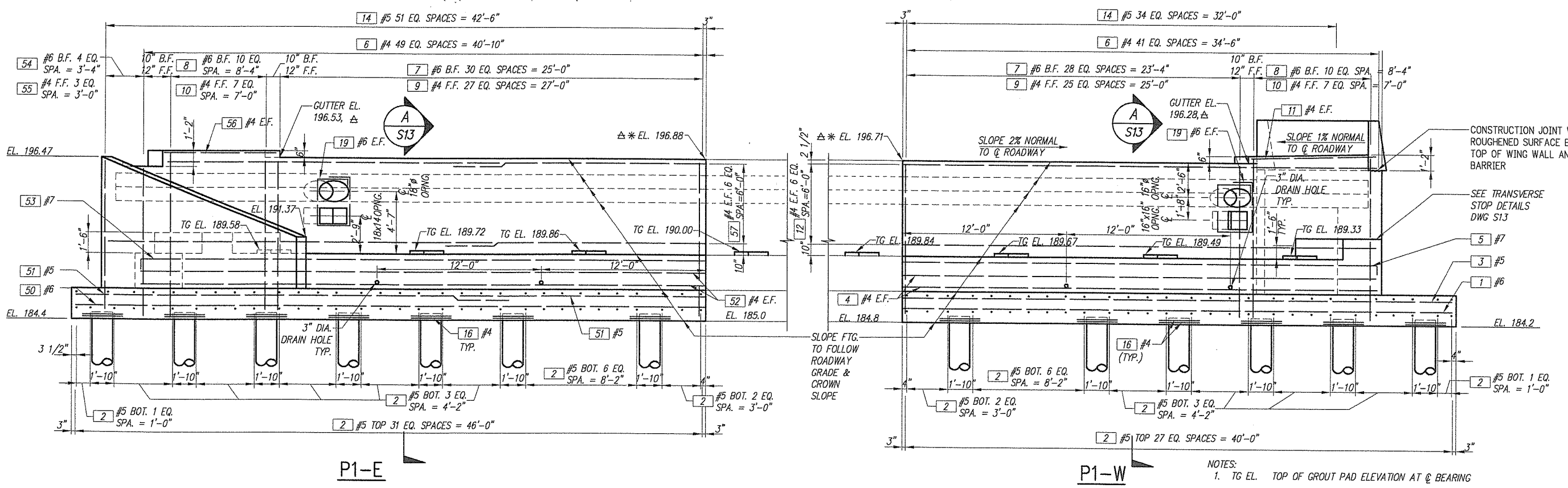

ELEVATION

LOOKING BACK ON STATIONING

NOTES:

1. TG EL. TOP OF GROUT PAD ELEVATION AT ℄ BEARING
2. * CONTRACTOR TO MATCH EXISTING STRUCTURE ELEVATION
3. △ THEORETICAL ELEVATION AT ℄ BEARING. SLOPE OF TOP FACE ABUTMENT WALL TO BE SAME AS ROADWAY GRADE.
4. P1-W = PIER 1 WEST ADDITION
   P1-E = PIER 1 EAST ADDITION

Fed. Aid No.
STPF-4253(010)

DESIGNED C. TOTTEN
DRAWN L. WILKES
CRP 392922
HOR. N/A
VERT. N/A
DATE FEB. 20, 2004
DWG: S12
SHEET 14 OF 78

CALL 48 HOURS BEFORE YOU DIG 1-800-553-4344 "It's the Law" CLARK COUNTY UTILITIES COORDINATING COUNCIL

DESIGN & ENGINEERING DIVISION

NE 20TH AVE/HGWY 99 REALIG.
CLARK COUNTY

PIER 1 - PLAN AND ELEVATION

STATE OF WASHINGTON 26653 REGISTERED PROFESSIONAL ENGINEER
2/19/04
EXPIRES 4/29/2005

otak Incorporated
105 W. Evergreen Blvd., Suite 300
Vancouver, WA 98660-3123
Phone: (360) 737-4813
FAX: (360) 737-9831

kpff Consulting Engineers
111 SW 5th Avenue
Suite 2500
Portland, Oregon 97204
503-227-3251

proud past, promising future

CLARK COUNTY WASHINGTON

PLOTTED DATE & TIME	UPDATED BY	PLOT SCALE	"PCP" FILE	PLOT VIEW
-	---	1=1	---	---

FILE PATH & NAME: D:\2-PROJECTS\99680\99680-S12.DWG

JOB #	JOB NAME
99680	N.E. HIGHWAY 99

XREFS: XMSP1A, XSURV, XBRIDGE, X99680

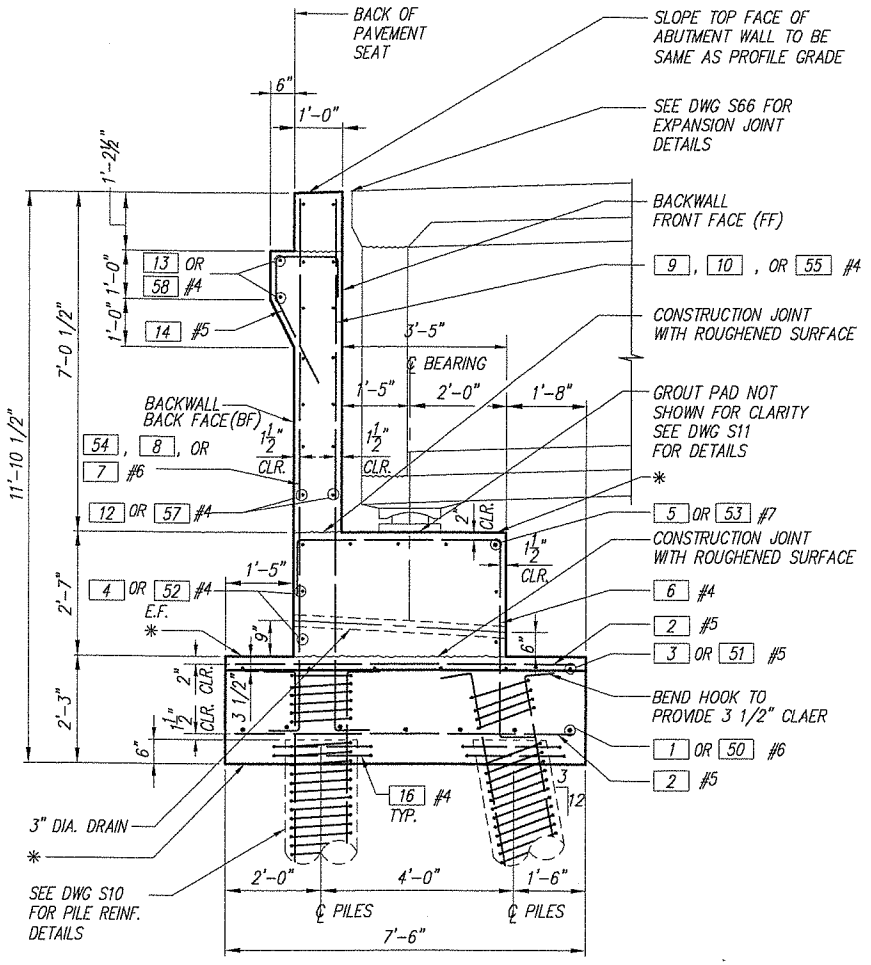

* SLOPE TO BE SAME AS ROADWAY GRADE.

SECTION A / S12

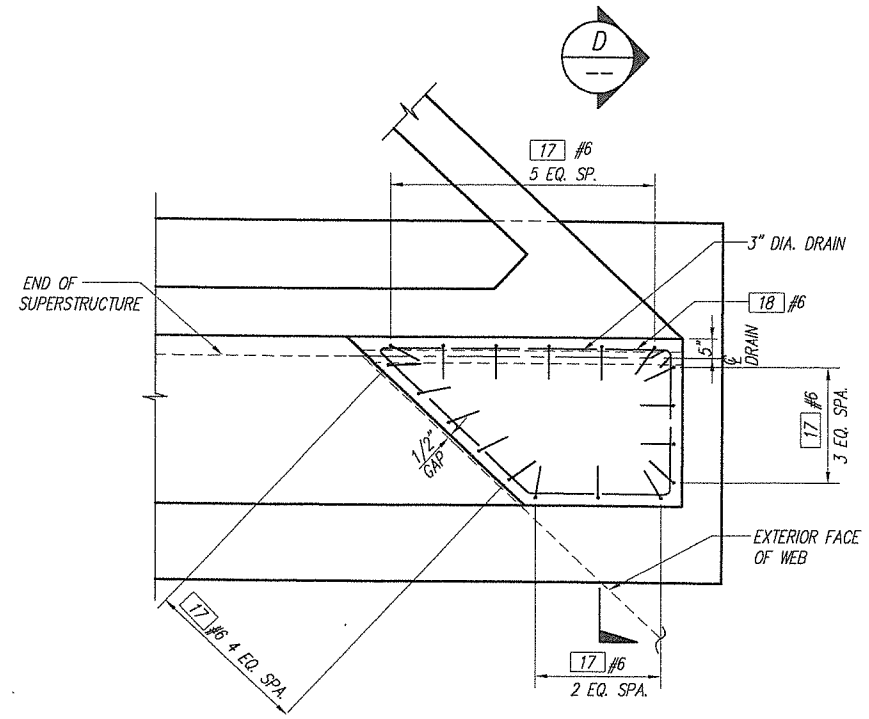

PARTIAL PLAN B / S12
(WEST TRANSVERSE STOP)

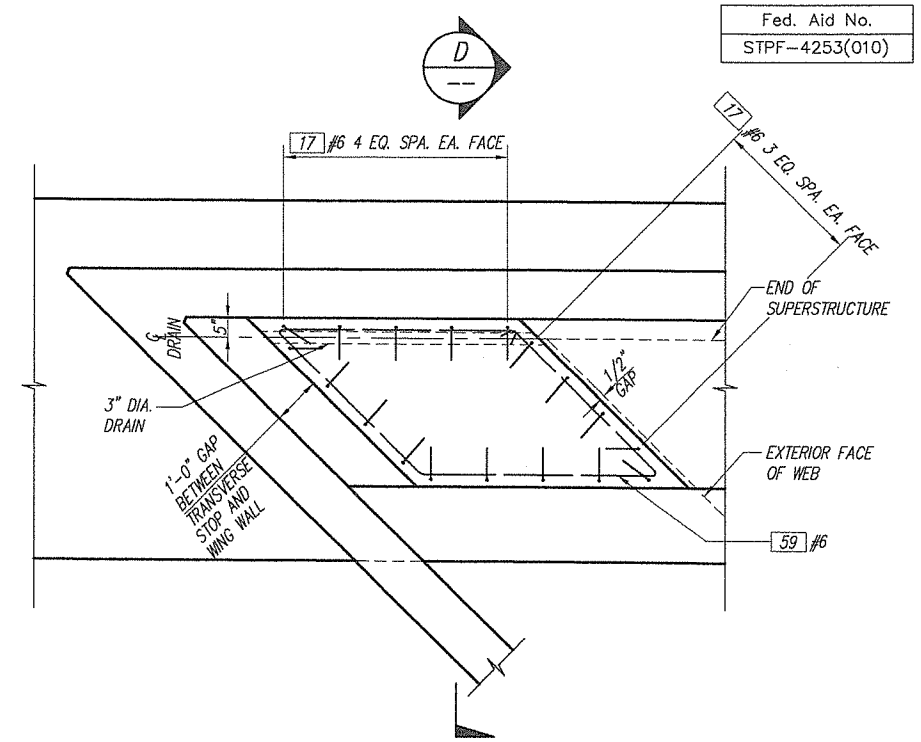

PARTIAL PLAN C / S12
(EAST TRANSVERSE STOP)

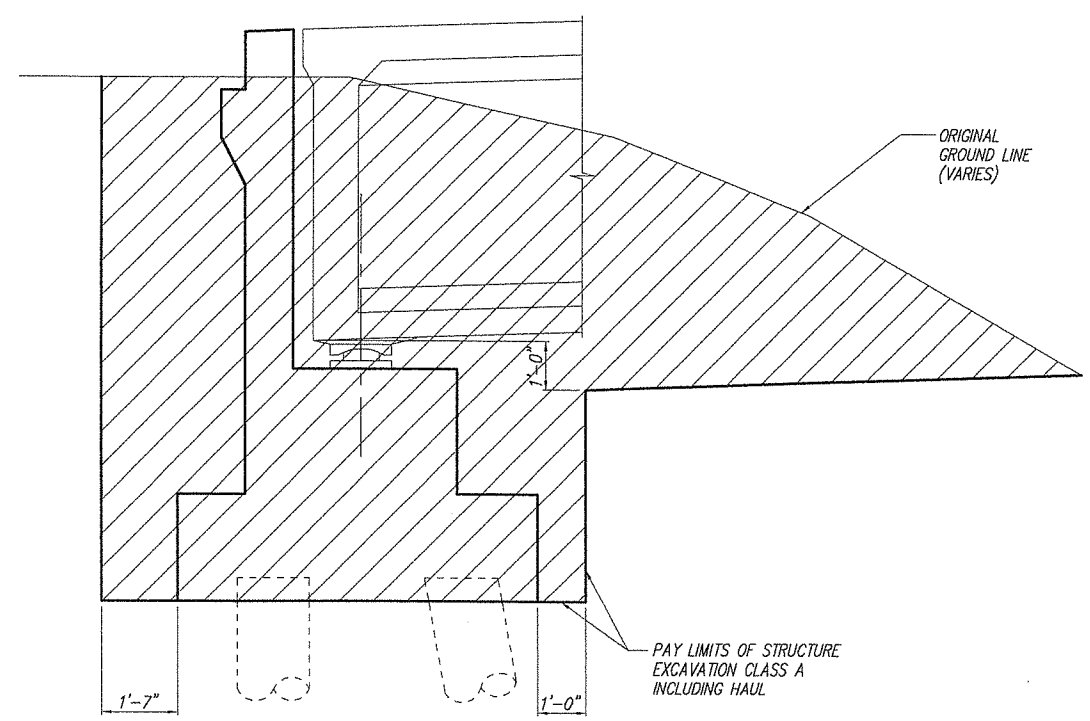

SECTION E

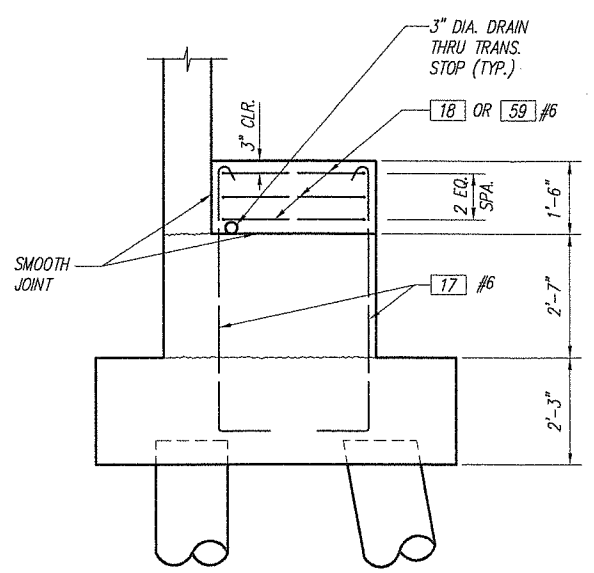

SECTION D

Fed. Aid No.
STPF-4253(010)

DESIGNED G. TOTTEN
DRAWN J. WILKES
CRP. 392822
HOR. N/A
VERT. N/A
DATE FEB. 20, 2004
DWG: S13
SHEET 15 OF 78

CALL 48 HOURS BEFORE YOU DIG 1-800-553-4344 "It's the Law" CLARK COUNTY UTILITIES COORDINATING COUNCIL

DESIGN & ENGINEERING DIVISION

NE 20TH AVE/HGWY 99 REALIG.
CLARK COUNTY
PIER 1
SECTIONS AND DETAILS I

STATE OF WASHINGTON
JAMES A. WILKES
22863
REGISTERED PROFESSIONAL ENGINEER
EXPIRES 2/10/2006

olak Incorporated
105 W. Evergreen Blvd., Suite 300
Vancouver, WA 98660-3128
Phone: (360) 737-9513
FAX: (360) 737-9532

kpff Consulting Engineers
111 SW 5th Avenue
Suite 2500
Portland, Oregon 97204
503-227-3251

proud past, promising future
CLARK COUNTY WASHINGTON

JOB #	JOB NAME	FILE PATH & NAME	PLOTTED DATE & TIME	UPDATED BY	PLOT SCALE	"PCP" FILE	PLOT VIEW
99680	N.E. 20 th AVE HIGHWAY 99	V:\BRIDGE H-P\N.E. HIGHWAY 99 (99406)\DESIGN\99680-S13.DWG	JUN. 08, 2001 6:13:56 PM		1:1 (1:2)		PLOT

XREFS: X99680,

Fed. Aid No.
STPF-4253(010)

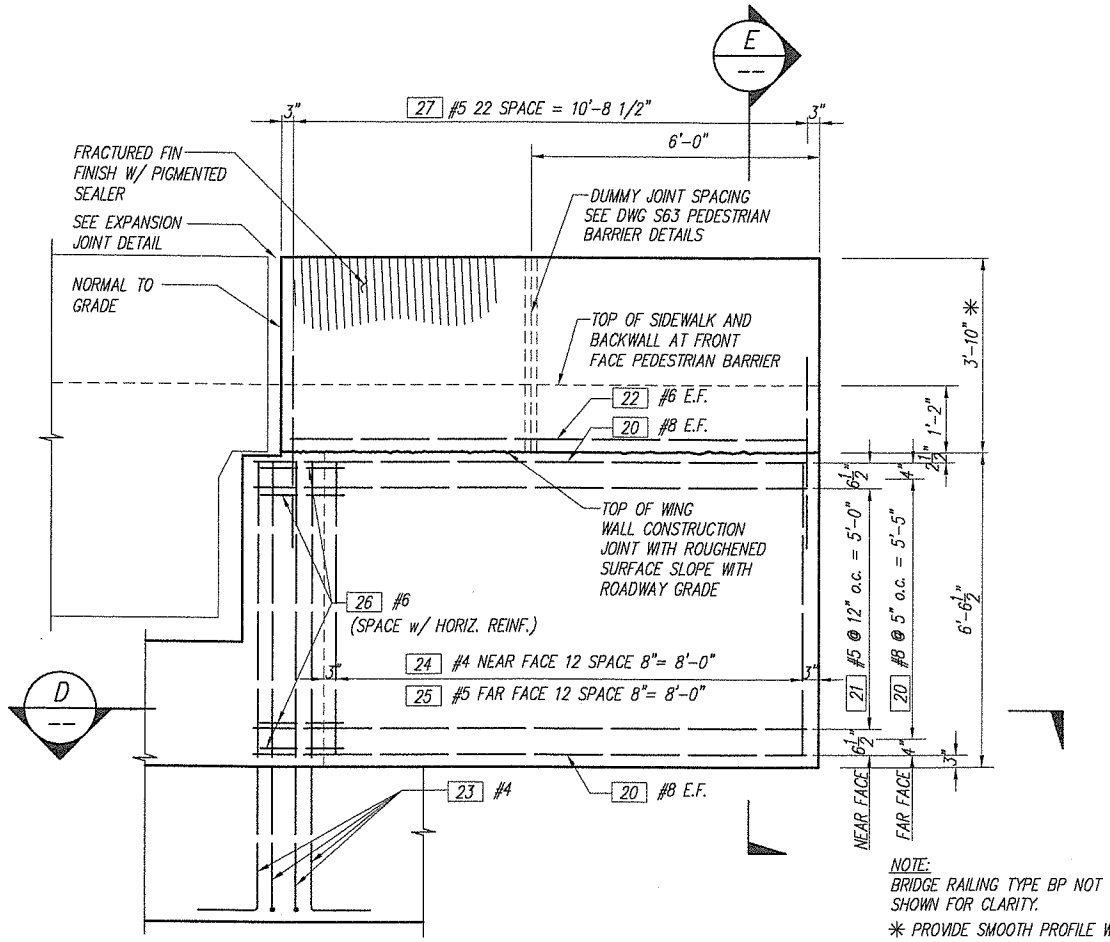

NOTE:
BRIDGE RAILING TYPE BP NOT SHOWN FOR CLARITY.
* PROVIDE SMOOTH PROFILE W/ PEDESTRIAN BARRIER ON BRIDGE & RETAINING WALL. SEE DWG. S33 & S63.

WING WALL NEAR FACE ELEVATION (C / S12)

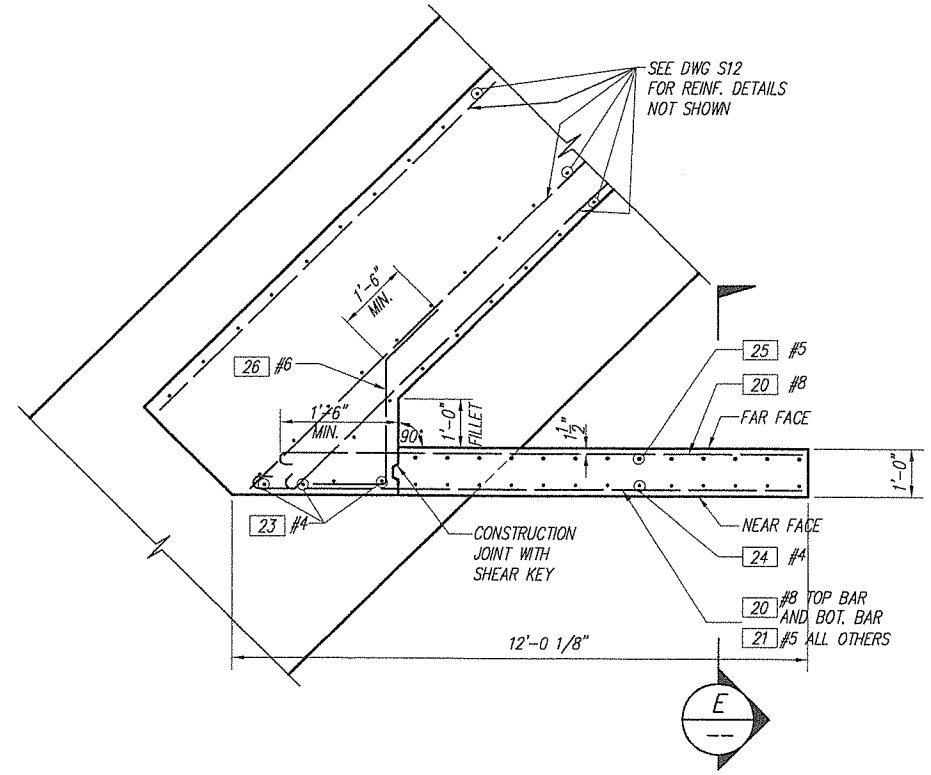

SECTION (D)

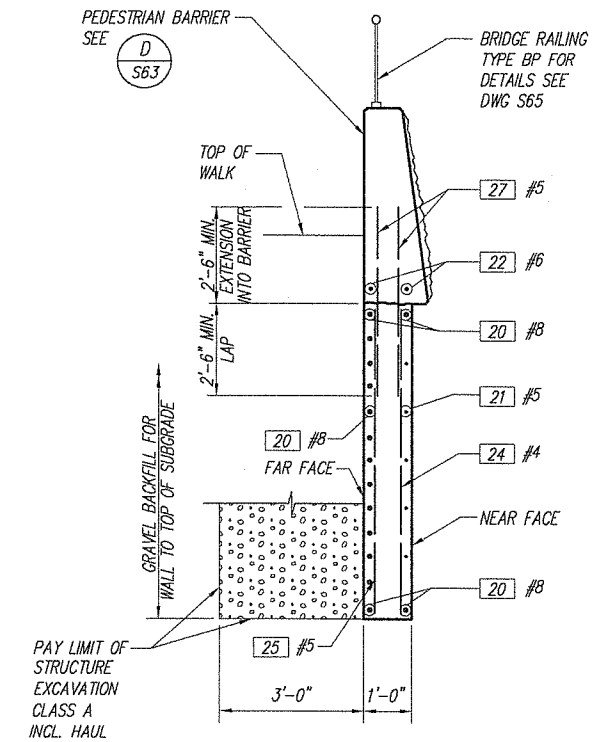

SECTION (E)

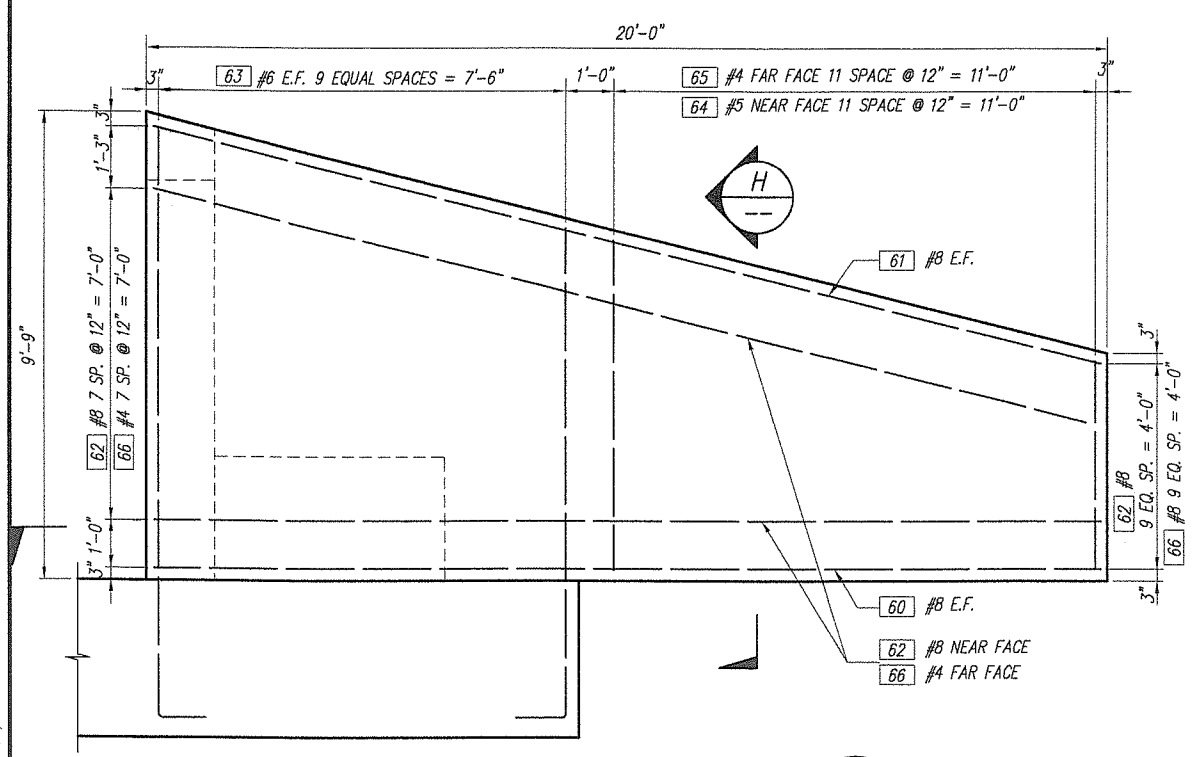

WING WALL NEAR FACE ELEVATION (F / S12)

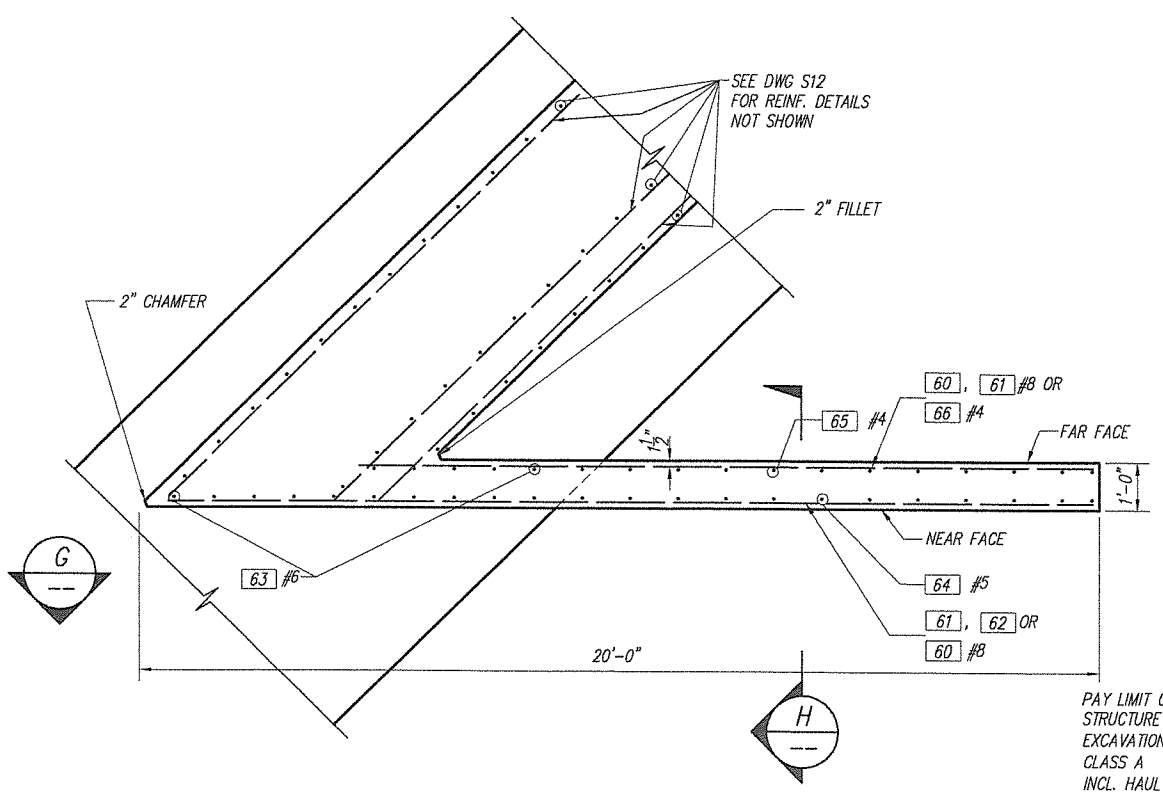

SECTION (G)

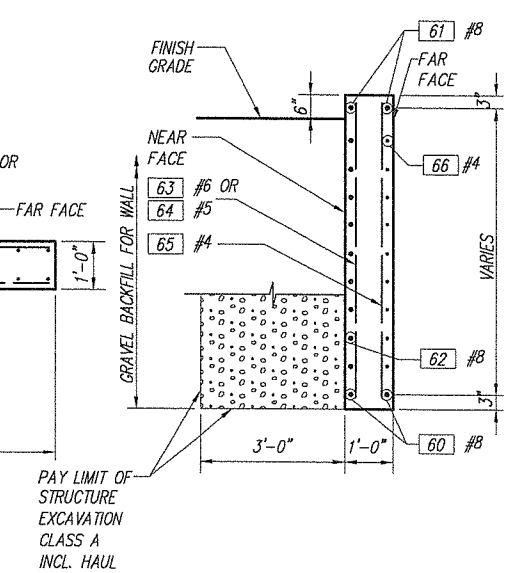

SECTION (H)

DESIGNED C. TOTTEN
DRAWN J. WILKES
CRP 392932
HOR. N/A
VERT. N/A
DATE FEB. 20, 2004
DWG: S14
SHEET 16 OF 78

CALL 48 HOURS BEFORE YOU DIG 1-800-553-4344 "It's the Law" CLARK COUNTY UTILITIES COORDINATING COUNCIL

DESIGN & ENGINEERING DIVISION
NE 20TH AVE/HGWY 99 REALIG.
CLARK COUNTY
PIER 1
SECTIONS AND DETAILS II

STATE OF WASHINGTON — SUSAN L. KRASKEVICH — 28403 — REGISTERED PROFESSIONAL ENGINEER — 2/14/06
LOTUS 2/14/2006

105 N. Evergreen Blvd., Suite 300
Vancouver, WA 98660-3123
Phone: (360) 737-4613
FAX: (360) 737-4601
Incorporated

111 SW 5th Avenue
Suite 2500
Portland, Oregon 97204
503-227-3251
Consulting Engineers

proud past, promising future
CLARK COUNTY WASHINGTON

PLOTTED DATE & TIME	UPDATED BY	PLOT SCALE	'PCP' FILE	PLOT VIEW
JUN. 08, 2001 6:13:56 PM		1:1 (1:2)		PLOT

FILE PATH & NAME: V:\BRIDGE H-P\N.E. HIGHWAY 99 (99406)\DESIGN\99680-S14.DWG

JOB #	JOB NAME
99680	N.E. 20 th AVE HIGHWAY 99

XREFS: X99680,

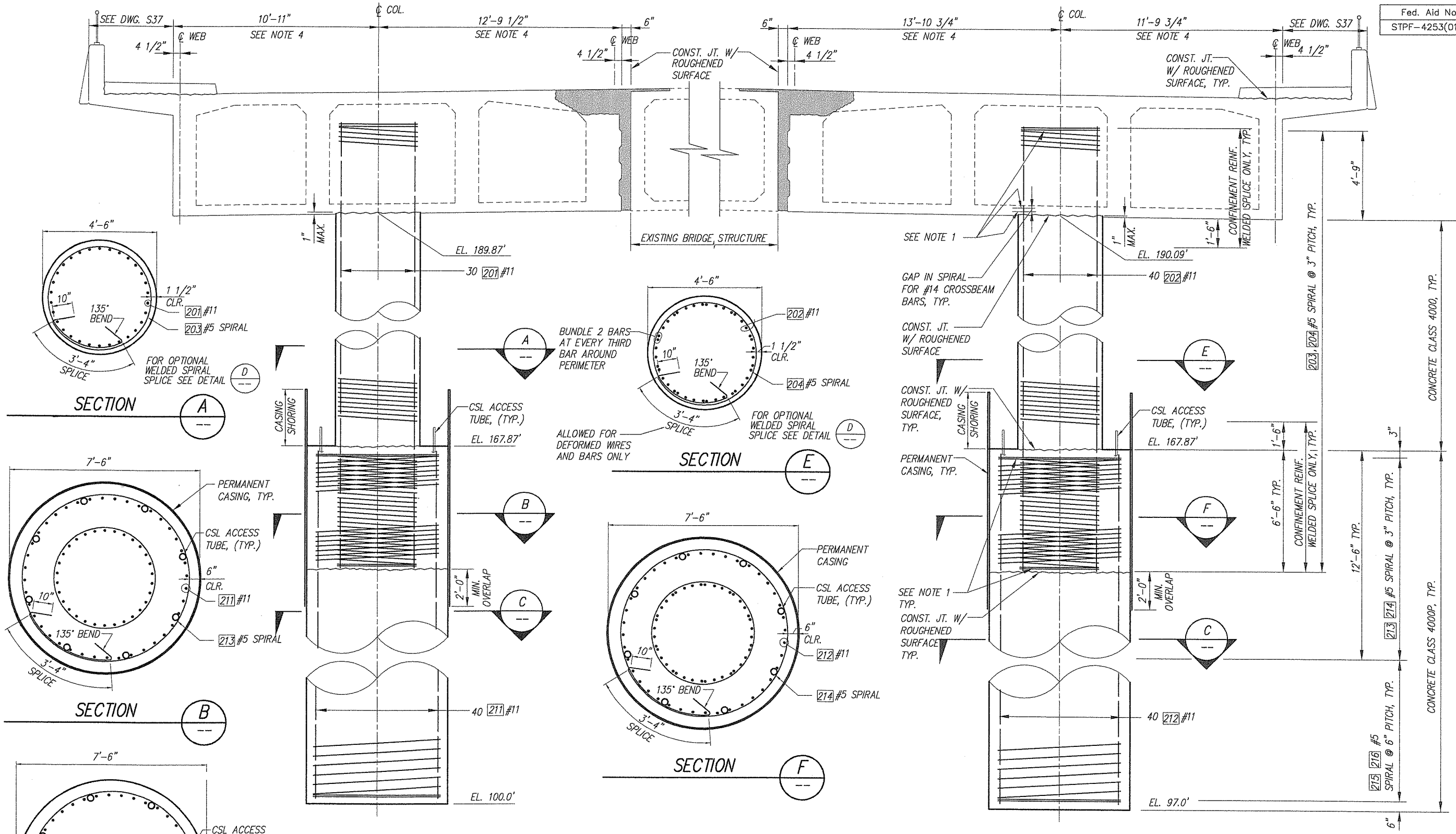

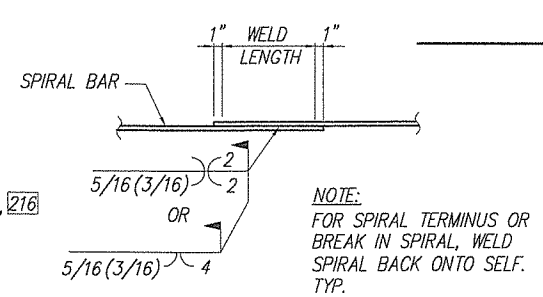

NOTE:
FOR SPIRAL TERMINUS OR BREAK IN SPIRAL, WELD SPIRAL BACK ONTO SELF. TYP.

WELDED SPIRAL SPLICE DETAIL D

REQUIRED FOR PLAIN WIRES AND BARS.
OPTIONAL FOR DEFORMED WIRES AND BARS.

NOTES:

1. TERMINATE SPIRALS WITH 1 1/2 TURNS MIN. AND WELD AS PER DETAIL D AND SPIRAL TERMINATION DETAIL ON S16.
2. OPTIONAL SPIRAL REINFORCEMENT:
   a. AASHTO M31, GRADE 60 5/8" PLAIN STEEL BAR.
   b. AASHTO M32, W31 COLD DRAWN WIRE.
   c. AASHTO M225, D31 DEFORMED WIRE.
3. DIMENSIONS ALONG CROSSBEAM ℄ PROJECTED PREPENDICULAR TO BRIDGE ℄.
4. NO SPLICES PERMITTED IN COLUMN VERTICAL BARS

Fed. Aid No.
STPF-4253(010)

DESIGNED C. TOTTEN
DRAWN J. MILKES
CRP 392922
HOR. N/A
VERT. N/A
DATE FEB. 20, 2004
DWG: S15
SHEET 17 OF 78

CALL 48 HOURS BEFORE YOU DIG 1-800-553-4344 "It's the Law" CLARK COUNTY UTILITIES COORDINATING COUNCIL

DESIGN & ENGINEERING DIVISION
NE 20TH AVE/HGWY 99 REALIG.
CLARK COUNTY
PIER 2
DRILLED SHAFTS AND COLUMNS

STATE OF WASHINGTON
JAMES A. HASSEN
REGISTERED PROFESSIONAL ENGINEER
EXPIRES 2/10/2006

otak Incorporated
105 W. Evergreen Blvd., Suite 300
Vancouver, WA 98660-3123
Phone: (360) 737-4613
FAX: (360) 737-4651

kpff Consulting Engineers
111 SW 5th Avenue
Suite 2500
Portland, Oregon 97204
503-227-3251

proud past, promising future
CLARK COUNTY WASHINGTON

JOB #	JOB NAME	FILE PATH & NAME	PLOTTED DATE & TIME	UPDATED BY	PLOT SCALE	'PCP' FILE	PLOT VIEW
99680	N.E. HIGHWAY 99	V:\BRIDGE H-P\N.E. HIGHWAY 99 (99406)\DESIGN\99680-S15.DWG	JUL. 20, 2001 12:05:48 PM	RICKT	TO FIT		PLOT

XREFS: X99680,

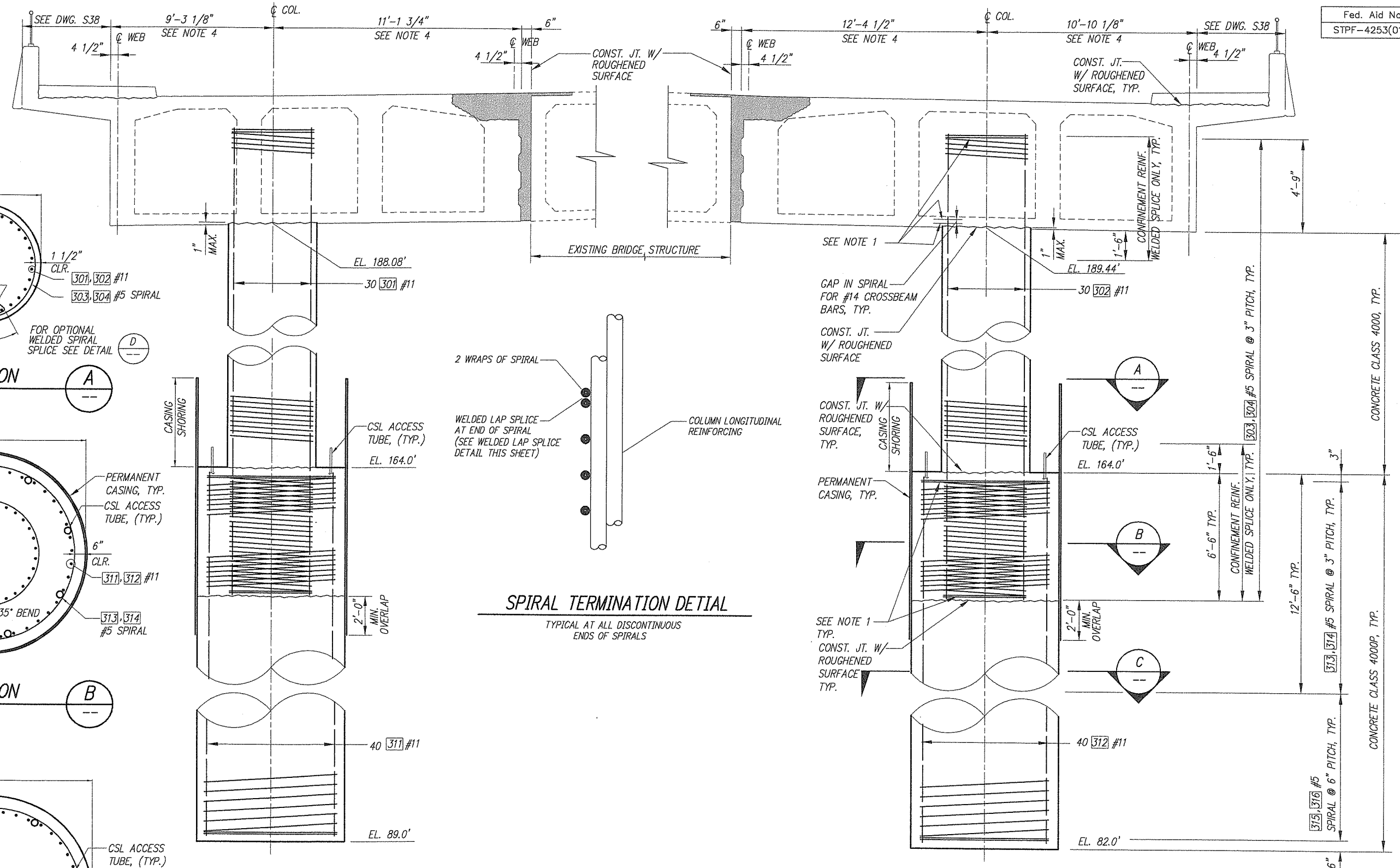

SPIRAL TERMINATION DETIAL

TYPICAL AT ALL DISCONTINUOUS ENDS OF SPIRALS

ELEVATION – PIER 3

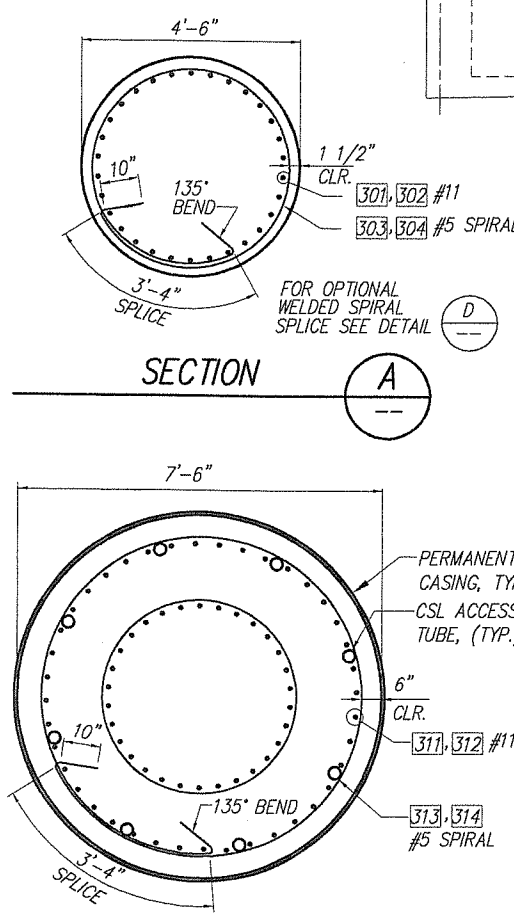

SECTION A

SECTION B

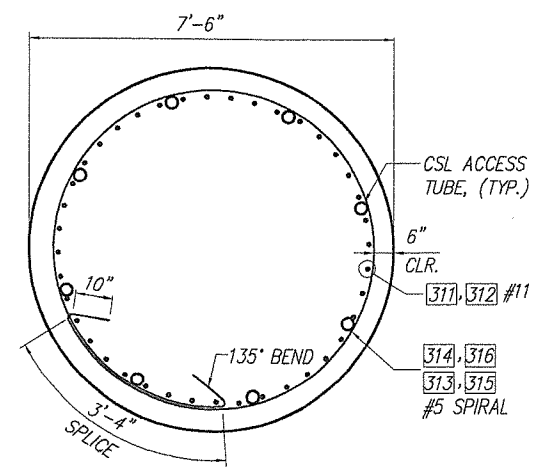

SECTION C

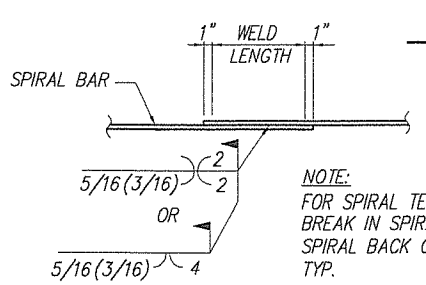

NOTE:
FOR SPIRAL TERMINUS OR BREAK IN SPIRAL, WELD SPIRAL BACK ONTO SELF. TYP.

WELDED SPIRAL SPLICE DETAIL D

REQUIRED FOR PLAIN WIRES AND BARS.
OPTIONAL FOR DEFORMED WIRES AND BARS.

NOTES:

1. TERMINATE SPIRALS WITH 1 1/2 TURNS MIN. AND WELD AS PER DETAIL D AND SPIRAL TERMINATION DETAIL.
2. OPTIONAL SPIRAL REINFORCEMENT:
   a. AASHTO M31, GRADE 60 5/8" PLAIN STEEL BAR.
   b. AASHTO M32, W31 COLD DRAWN WIRE.
   c. AASHTO M225, D31 DEFORMED WIRE.
3. DIMENSIONS ALONG CROSSBEAM ℄ PROJECTED PREPENDICULAR TO BRIDGE ℄.
4. NO SPLICES PERMITTED IN COLUMN VERTICAL BARS.

Fed. Aid No.
STPF-4253(010)

DESIGNED C. TOTTEN
DRAWN J. MILKES
CRP 39322
HOR. N/A
VERT. N/A
DATE FEB. 20, 2004
DWG: S16
SHEET 18 OF 78

CALL 48 HOURS BEFORE YOU DIG 1-800-553-4344 "It's the Law" CLARK COUNTY UTILITIES COORDINATING COUNCIL

DESIGN & ENGINEERING DIVISION

NE 20TH AVE/HGWY 99 REALIG.
CLARK COUNTY
PIER 3
DRILLED SHAFTS AND COLUMNS

LEWIS H. HASLAM STATE OF WASHINGTON 38348 REGISTERED PROFESSIONAL ENGINEER
11/64
SEPTEMBER 2, 2003

otak Incorporated
105 W. Evergreen Blvd., Suite 500
Vancouver, WA 98660-3123
Phone: (360) 737-4483
FAX: (360) 737-8931

kpff Consulting Engineers
111 SW 5th Avenue
Suite 2500
Portland, Oregon 97204
503-227-3251

proud past, promising future

CLARK COUNTY
WASHINGTON

JOB #	JOB NAME	FILE PATH & NAME	PLOTTED DATE & TIME	UPDATED BY	PLOT SCALE	'PCP' FILE	PLOT VIEW
99680	N.E. HIGHWAY 99	V:\BRIDGE H-P\N.E. HIGHWAY 99 (99406)\DESIGN\99680-S16.DWG	JUL. 20, 2001 12:14:41 PM	RICKT	TO FIT		PLOT

XREFS: X99680,

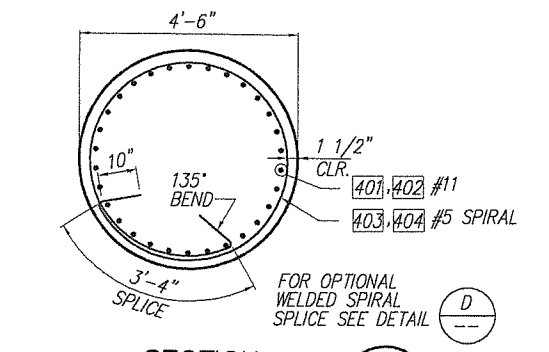

SECTION A

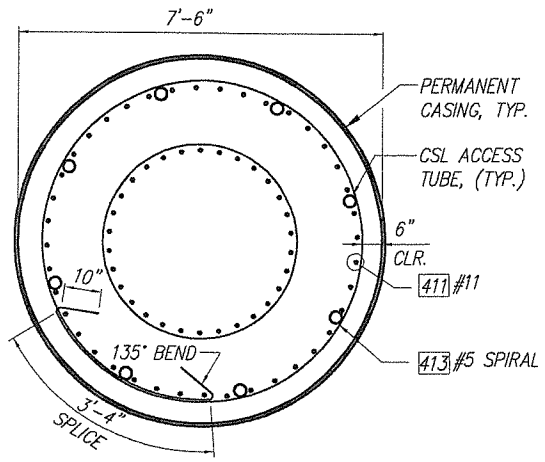

SECTION B

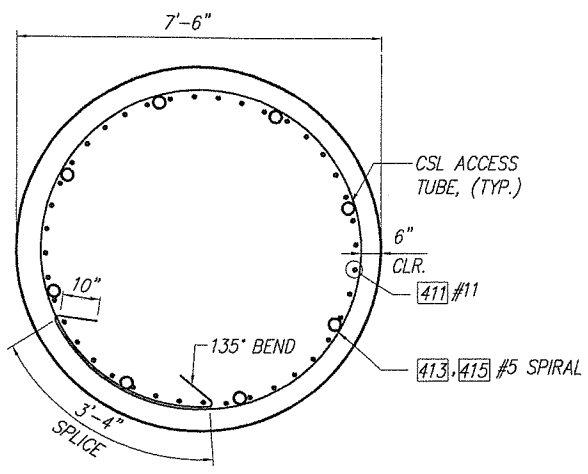

SECTION C

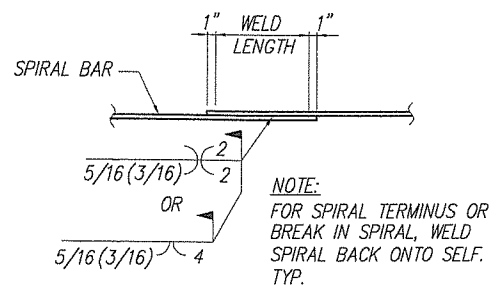

NOTE:
FOR SPIRAL TERMINUS OR BREAK IN SPIRAL, WELD SPIRAL BACK ONTO SELF. TYP.

WELDED SPIRAL SPLICE DETAIL D

REQUIRED FOR PLAIN WIRES AND BARS.
OPTIONAL FOR DEFORMED WIRES AND BARS.

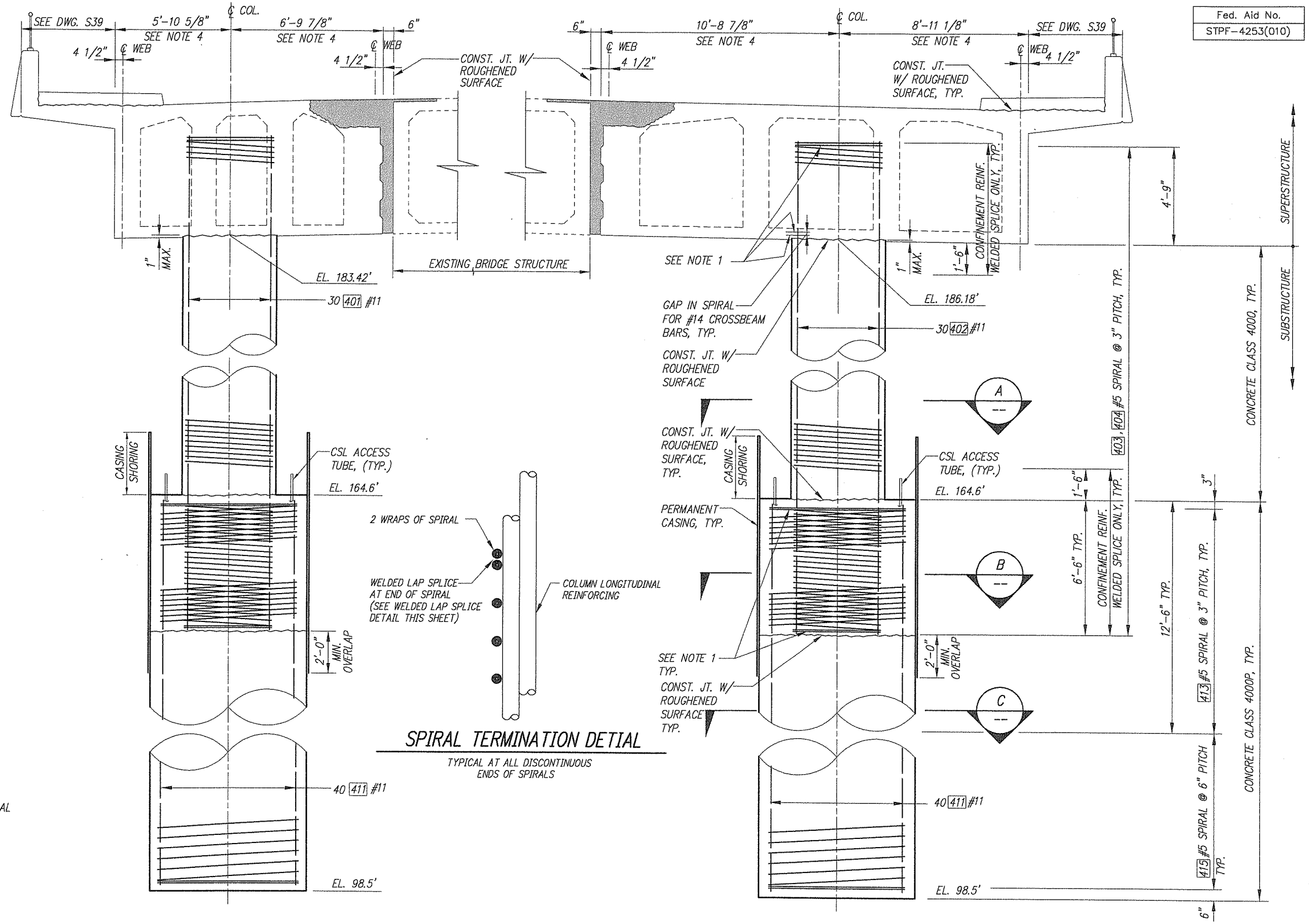

SPIRAL TERMINATION DETIAL

TYPICAL AT ALL DISCONTINUOUS ENDS OF SPIRALS

ELEVATION – PIER 4

NOTES:

1. TERMINATE SPIRALS WITH 1 1/2 TURNS MIN. AND WELD AS PER DETAIL D AND SPIRAL TERMINATION DETAIL.
2. OPTIONAL SPIRAL REINFORCEMENT:
   a. AASHTO M31, GRADE 60 5/8" PLAIN STEEL BAR.
   b. AASHTO M32, W31 COLD DRAWN WIRE.
   c. AASHTO M225, D31 DEFORMED WIRE.
3. DIMENSIONS ALONG CROSSBEAM ℄ PROJECTED PREPENDICULAR TO BRIDGE ℄.
4. NO SPLICES PERMITTED IN COLUMN VERTICAL BARS.

Fed. Aid No.
STPF-4253(010)

DESIGNED C. TOTTEN
DRAWN L. WILKES
CRP 392922
HOR. N/A
VERT. N/A
DATE FEB. 20, 2004
DWG: S17
SHEET 19 OF 78

CALL 48 HOURS BEFORE YOU DIG 1-800-553-4344 "It's the Law" CLARK COUNTY UTILITIES COORDINATING COUNCIL

DESIGN & ENGINEERING DIVISION
NE 20TH AVE/HGWY 99 REALIG.
CLARK COUNTY
PIER 4
DRILLED SHAFTS AND COLUMNS

STATE OF WASHINGTON
DAVID L. HAMILTON
22885
REGISTERED PROFESSIONAL ENGINEER
12/01/03 2/19/2004

otak Incorporated
105 W. Evergreen Blvd., Suite 500
Vancouver, WA 98660-3123
Phone: (360) 737-8013
FAX: (360) 737-9831

kpff Consulting Engineers
111 SW 5th Avenue
Suite 2500
Portland, Oregon 97204
503-227-3251

proud past, promising future
CLARK COUNTY
WASHINGTON

JOB #	JOB NAME	FILE PATH & NAME	PLOTTED DATE & TIME	UPDATED BY	PLOT SCALE	'PCP' FILE	PLOT VIEW
99680	N.E. HIGHWAY 99	V:\BRIDGE H-P\N.E. HIGHWAY 99 (99406)\DESIGN\99680-S17.DWG	JUL. 20, 2001 12:21:19 PM	RICKT	TO FIT		PLOT

XREFS: X99680,

Fed. Aid No.
STPF-4253(010)

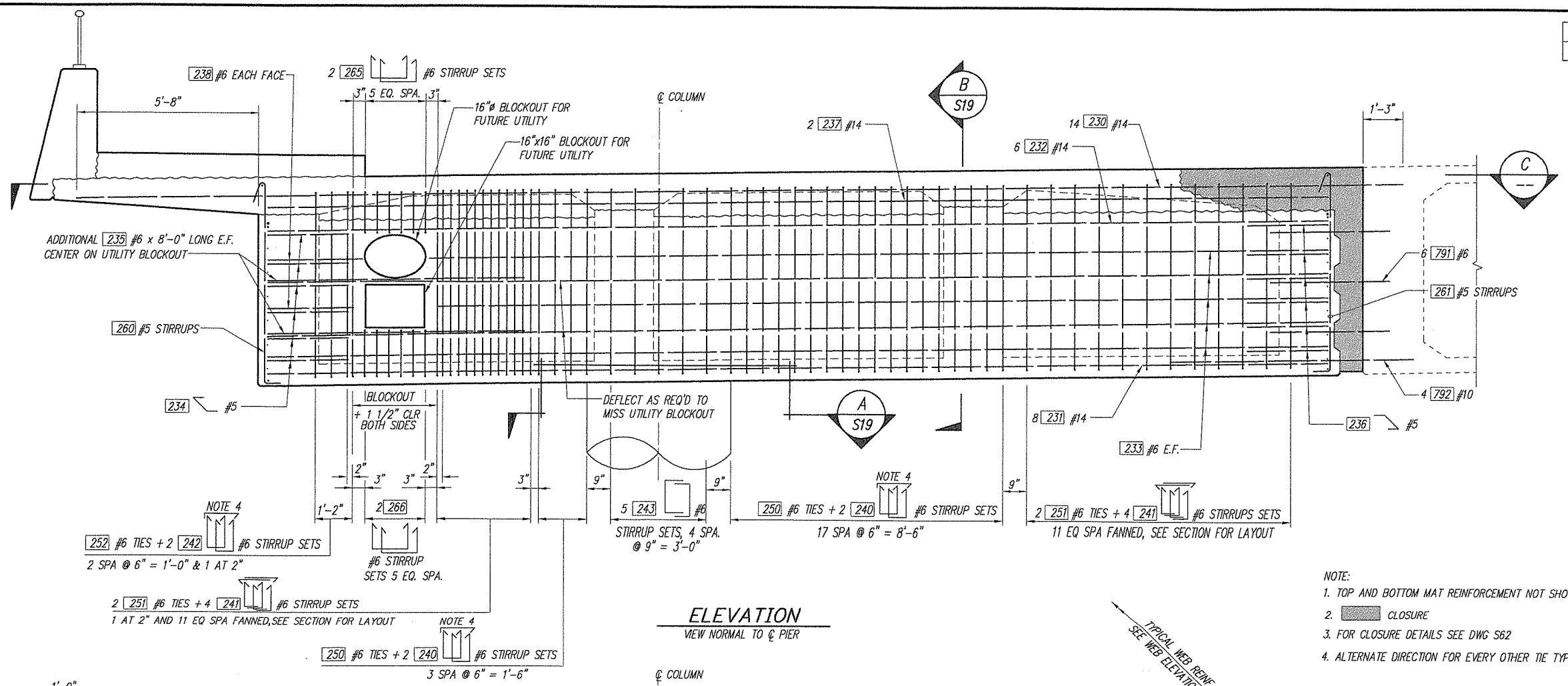

ELEVATION

VIEW NORMAL TO ℄ PIER

NOTE:

1. TOP AND BOTTOM MAT REINFORCEMENT NOT SHOWN FOR CLARITY.
2. CLOSURE
3. FOR CLOSURE DETAILS SEE DWG S62
4. ALTERNATE DIRECTION FOR EVERY OTHER TIE TYP.

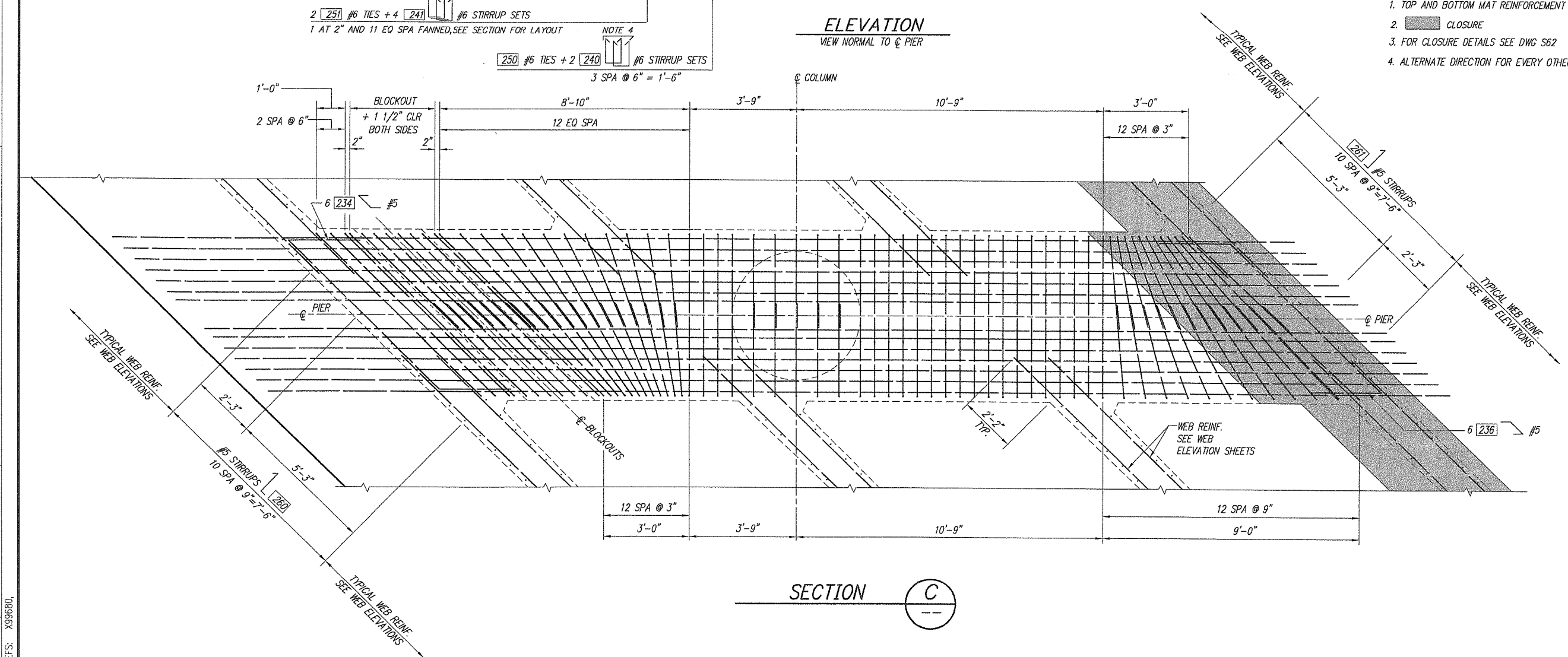

SECTION C

DESIGNED C. TOTTEN
DRAWN J. WILKES
CRP 393922
HOR. N/A
VERT. N/A
DATE FEB. 20, 2004
DWG: S18
SHEET 20 OF 78

CALL 48 HOURS BEFORE YOU DIG 1-800-553-4344 "It's the Law" CLARK COUNTY UTILITIES COORDINATING COUNCIL

DESIGN & ENGINEERING DIVISION

NE 20TH AVE/HGWY 99 REALIG.
CLARK COUNTY
PIER 2
WEST CROSSBEAM I

STATE OF WASHINGTON 26540 REGISTERED PROFESSIONAL ENGINEER
2/11/04
SEALING 4/01/2006

otak Incorporated
105 W. Evergreen Blvd., Suite 300
Vancouver, WA 98660-3123
Phone: (360) 737-8513
FAX: (360) 737-9651

kpff Consulting Engineers
111 SW 5th Avenue
Suite 2500
Portland, Oregon 97204
503-227-3251

proud past, promising future

CLARK COUNTY WASHINGTON

JOB #	JOB NAME	FILE PATH & NAME	UPDATED BY	PLOT SCALE	'PCP' FILE	PLOT VIEW
99680	N.E. 20 th AVE HIGHWAY 99	V:\BRIDGE H-P\N.E. HIGHWAY 99 (99406)\DESIGN\99680-S18.DWG	RICKT	1:1 (1:2)		PLOT
			PLOTTED DATE & TIME JUL. 26, 2001 9:59:11 AM			

XREFS: X99680,

Fed. Aid No.
STPF-4253(010)

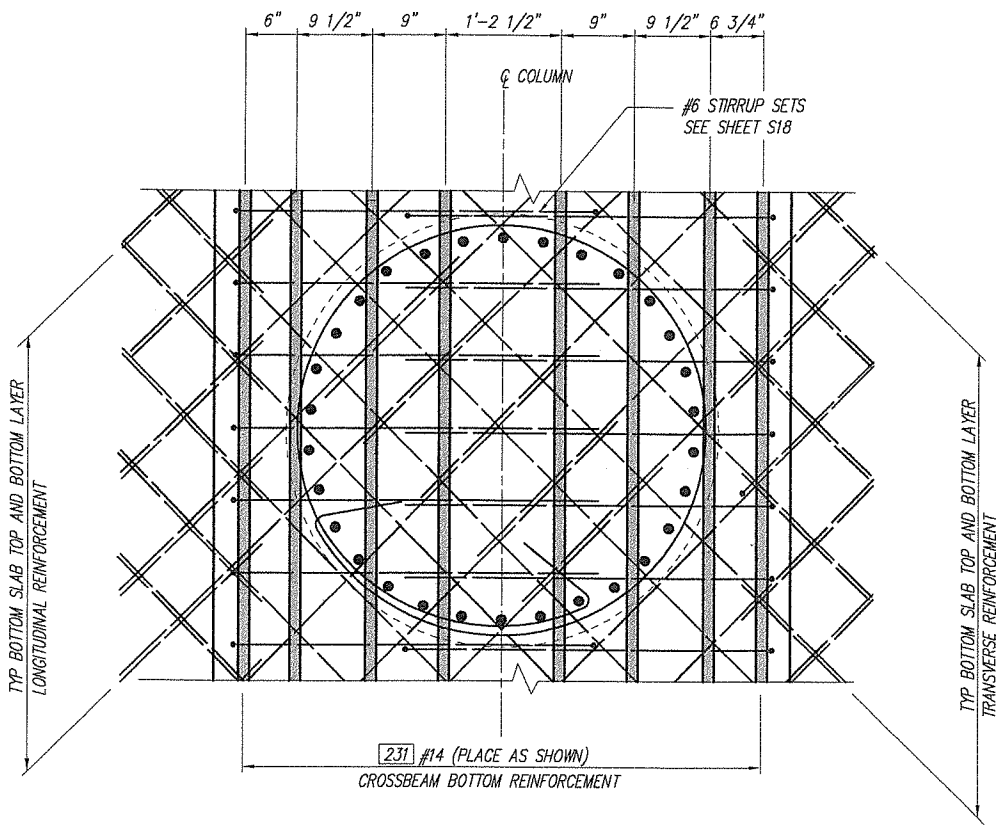

SECTION A / S18

WEB REINFORCEMENT NOT SHOWN FOR CLARITY, SEE NOTE 4.

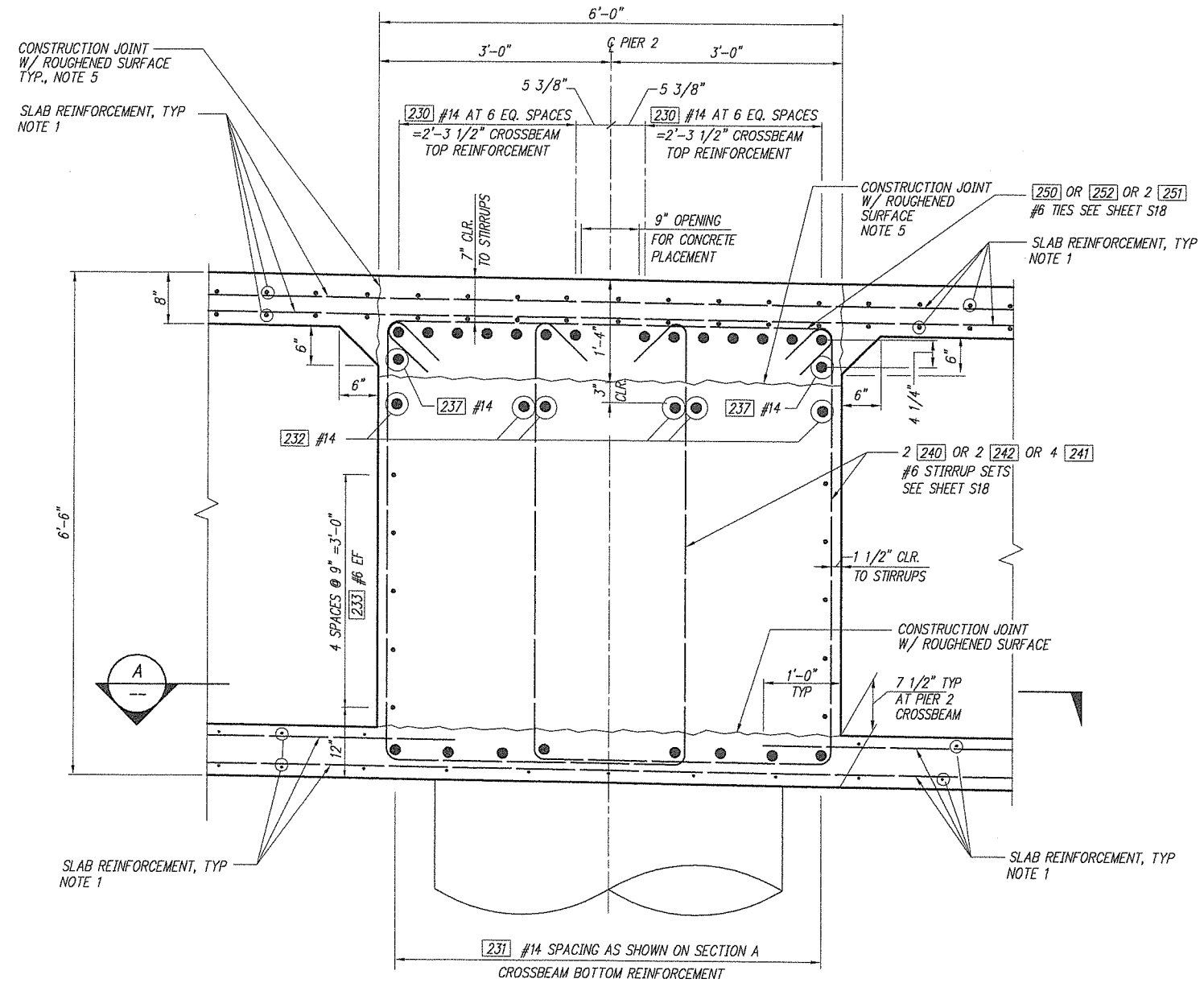

SECTION B / S18

NOTES:

1. FOR TOP AND BOTTOM SLAB REINFORCEMENT BAR MARKS AND SPACING SEE SLAB REINFORCING PLANS.
2. #4 BOTTOM SLAB REINFORCEMENT MAYBE DEFLECTED TO AVOID COLUMN REINFORCEMENT.
3. FOR STIRRUP SPACING SEE DWG. S18.
4. FOR WEB LOCATION RELATIVE TO PIER ℄ SEE FRAMING PLAN.
5. CAST UPPER PORTION OF CROSSBEAM AFTER TOP SLAB IS CAST.

PLOTTED DATE & TIME	UPDATED BY	PLOT SCALE	'PCP' FILE	PLOT VIEW
JUN. 29, 2001 11:41:27 AM	ALINAE	1:1 (1:2)		PLOT

FILE PATH & NAME: V:\BRIDGE H-P\N.E. HIGHWAY 99 (99406)\DESIGN\99680-S19.DWG

JOB #	JOB NAME
99680	N.E. 20 th AVE HIGHWAY 99

XREFS: X99680,

DESIGNED C. TOTTEN
DRAWN J. WILKES
CRP 392922
HOR. N/A
VERT. N/A
DATE FEB. 20, 2004
DWG: S19
SHEET 21 OF 78

CALL 48 HOURS BEFORE YOU DIG 1-800-553-4344 "It's the Law" CLARK COUNTY UTILITIES COORDINATING COUNCIL

DESIGN & ENGINEERING DIVISION

NE 20TH AVE/HGWY 99 REALIG.
CLARK COUNTY
PIER 2
WEST CROSSBEAM II

STATE OF WASHINGTON — JAMES R. HASSAN — REGISTERED PROFESSIONAL ENGINEER — 28363
EXPIRES 2/19/2006
2/19/04

105 W. Evergreen Blvd., Suite 300
Vancouver, WA 98660-3123
Phone: (360) 737-8613
FAX: (360) 737-8661

Clark Incorporated

KPFF Consulting Engineers
111 SW 5th Avenue
Suite 2500
Portland, Oregon 97204
503-227-3251

proud past, promising future

CLARK COUNTY
WASHINGTON

Fed. Aid No.
STPF-4253(010)

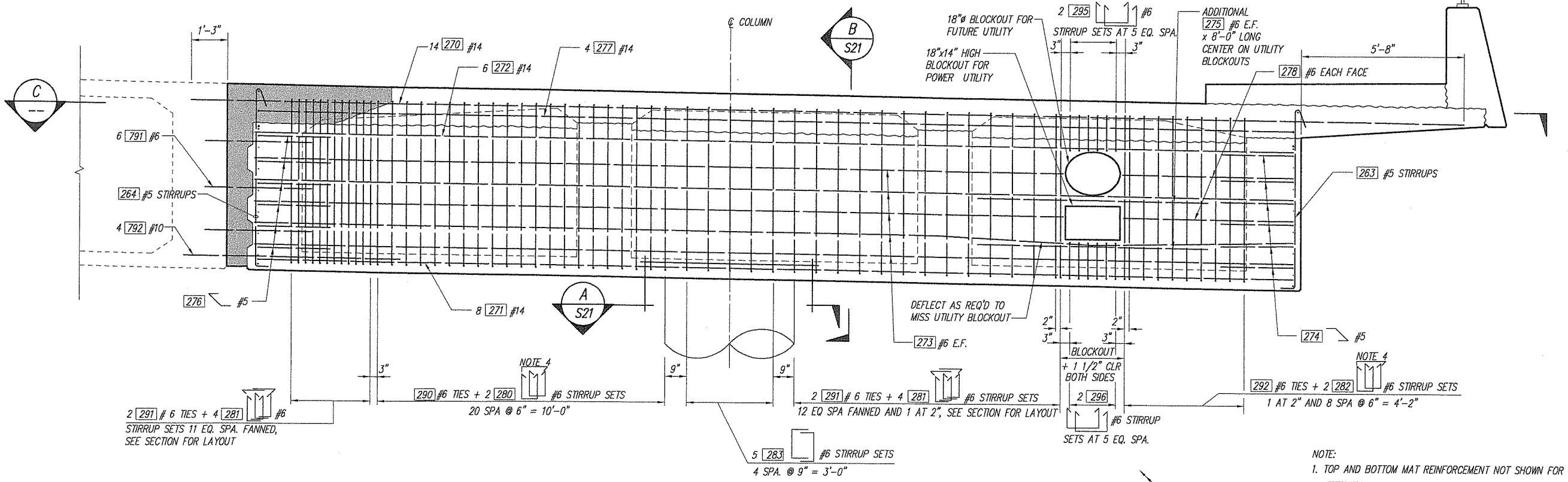

ELEVATION

VIEW NORMAL TO ℄ PIER

NOTE:

1. TOP AND BOTTOM MAT REINFORCEMENT NOT SHOWN FOR CLARITY.
2. CLOSURE
3. FOR CLOSURE DETAILS SEE DWG S62
4. ALTERNATE DIRECTION FOR EVERY OTHER TIE TYP.

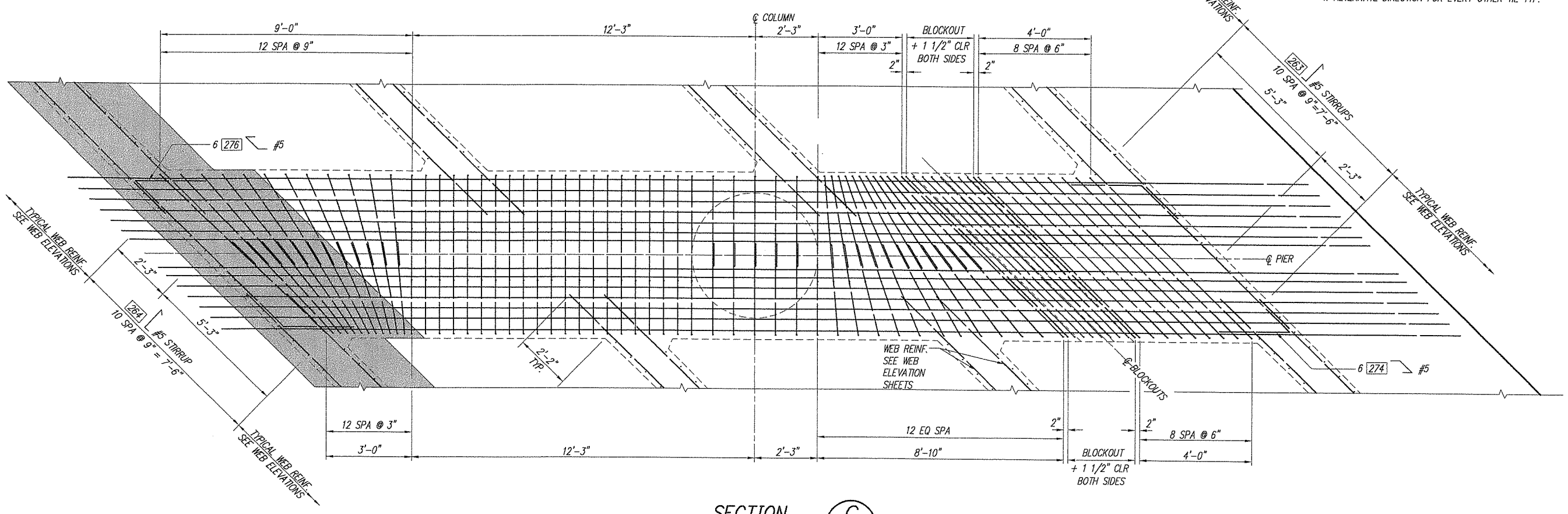

SECTION C

DESIGNED G. TOTTEN
DRAWN L. WILKES
CRP 393932
HOR. N/A
VERT. N/A
DATE FEB. 20, 2004
DWG: S20
SHEET 22 OF 78

CALL 48 HOURS BEFORE YOU DIG 1-800-553-4344 "It's the Law" CLARK COUNTY UTILITIES COORDINATING COUNCIL

DESIGN & ENGINEERING DIVISION

NE 20TH AVE/HGWY 99 REALIG.
CLARK COUNTY
PIER 2
EAST CROSSBEAM I

STATE OF WASHINGTON
JAMES A. HAGEN
22665
REGISTERED PROFESSIONAL ENGINEER
EXPIRES 12/31/2006

otak Incorporated
105 W. Evergreen Blvd., Suite 500
Vancouver, WA 98660-3123
Phone: (360) 737-8513
FAX: (360) 737-9851

kpff Consulting Engineers
111 SW 5th Avenue
Suite 2500
Portland, Oregon 97204
503-227-3251

proud past, promising future

CLARK COUNTY
WASHINGTON

JOB #	JOB NAME	FILE PATH & NAME	PLOTTED DATE & TIME	UPDATED BY	PLOT SCALE	'PCP' FILE	PLOT VIEW
99680	N.E. 20 th AVE HIGHWAY 99	V:\BRIDGE H-P\N.E. HIGHWAY 99 (99406)\DESIGN\99680-S20.DWG	JUL. 31, 2001 8:46:47 AM	RICKT	1:1 (1:2)		PLOT

XREFS: X99680,

Fed. Aid No.
STPF-4253(010)

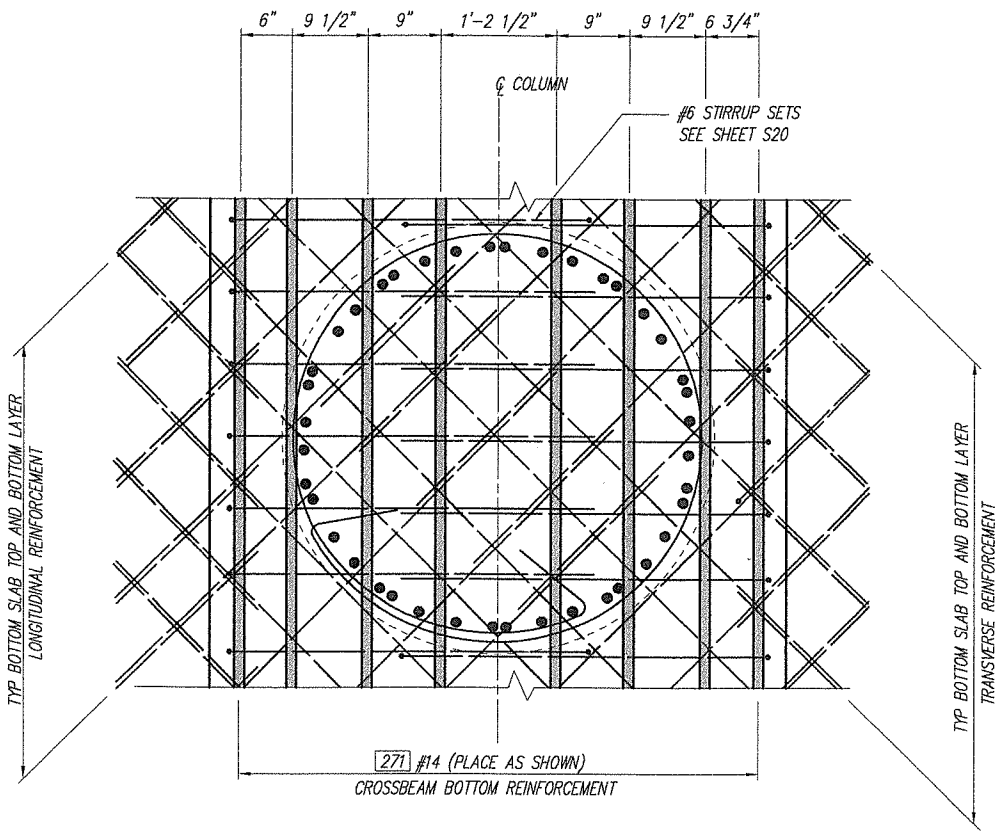

SECTION A / S20

WEB REINFORCEMENT NOT SHOWN FOR CLARITY, SEE NOTE 4

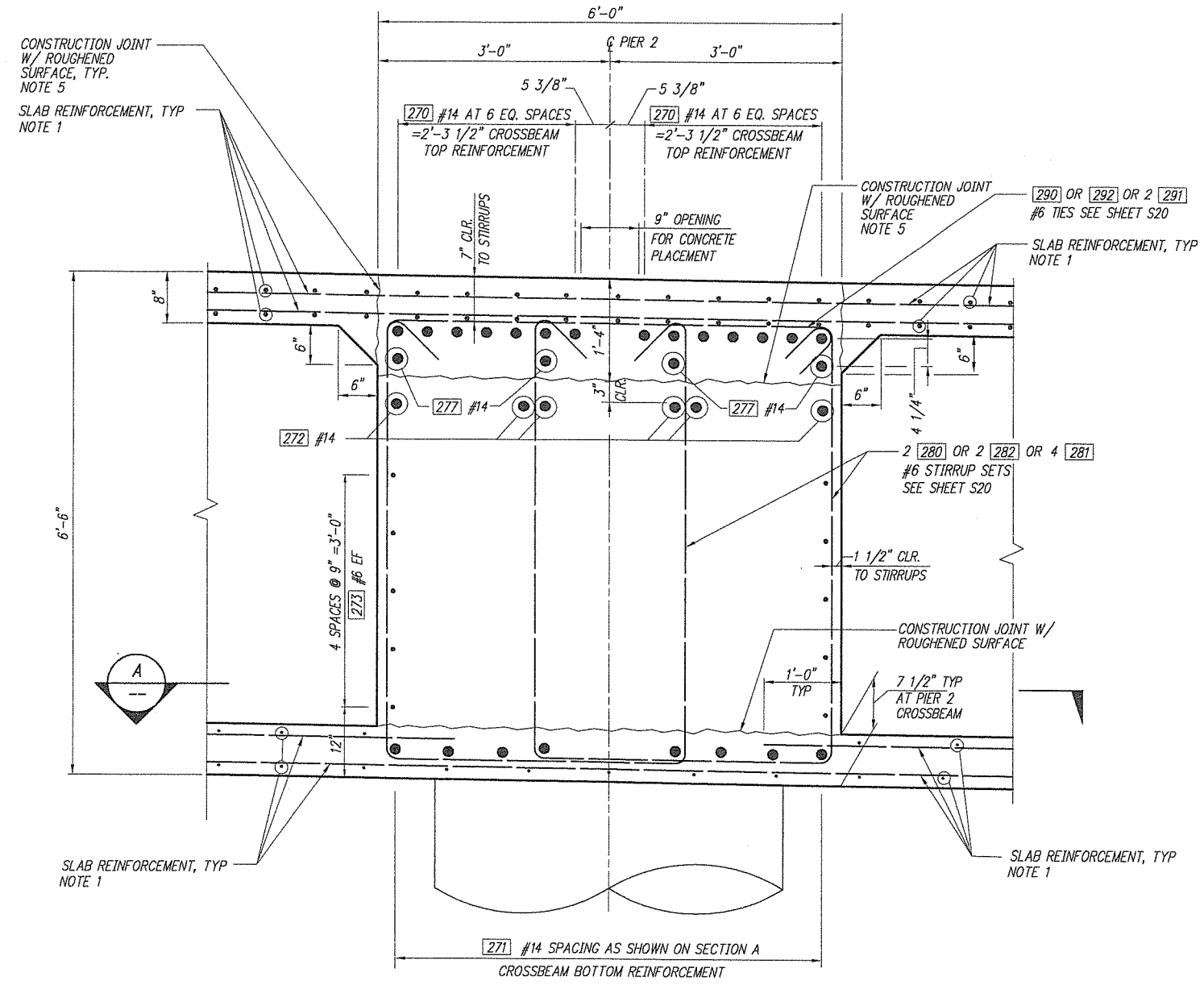

SECTION B / S20

NOTES:

1. FOR TOP AND BOTTOM SLAB REINFORCEMENT BAR MARKS AND SPACING SEE SLAB REINFORCING PLANS.
2. #4 BOTTOM SLAB REINFORCEMENT MAYBE DEFLECTED TO AVOID COLUMN REINFORCEMENT.
3. FOR STIRRUP SPACING SEE DWG. S20.
4. FOR WEB LOCATION RELATIVE TO PIER ℄ SEE FRAMING PLAN.
5. CAST UPPER PORTION OF CROSSBEAM AFTER TOP SLAB IS CAST.

PLOTTED DATE & TIME	UPDATED BY	PLOT SCALE	'PCP' FILE	PLOT VIEW
JUN. 29, 2001 11:41:27 AM	ALINAE	1:1 (1:2)		PLOT

JOB #	JOB NAME	FILE PATH & NAME
99680	N.E. 20 th AVE HIGHWAY 99	V:\BRIDGE H-P\N.E. HIGHWAY 99 (99406)\DESIGN\99680-S19.DWG
XREFS: X99680.		

DESIGNED C. TOTTEN
DRAWN J. MUKES
CRP 393922
HOR. N/A
VERT. N/A
DATE FEB. 20, 2004
DWG: S21
SHEET 23 OF 78

CALL 48 HOURS BEFORE YOU DIG 1-800-553-4344 "It's the Law" CLARK COUNTY UTILITIES COORDINATING COUNCIL

DESIGN & ENGINEERING DIVISION

NE 20TH AVE/HGWY 99 REALIG.
CLARK COUNTY
PIER 2
EAST CROSSBEAM II

STATE OF WASHINGTON REGISTERED PROFESSIONAL ENGINEER
EXPIRES 12/07/2006

otak Incorporated
105 W. Evergreen Blvd., Suite 300
Vancouver, WA 98660-3123
Phone: (360) 737-8613
FAX: (360) 737-9651

kpff Consulting Engineers
111 SW 5th Avenue
Suite 2500
Portland, Oregon 97204
503-227-3251

proud past, promising future

CLARK COUNTY
WASHINGTON

Fed. Aid No.
STPF-4253(010)

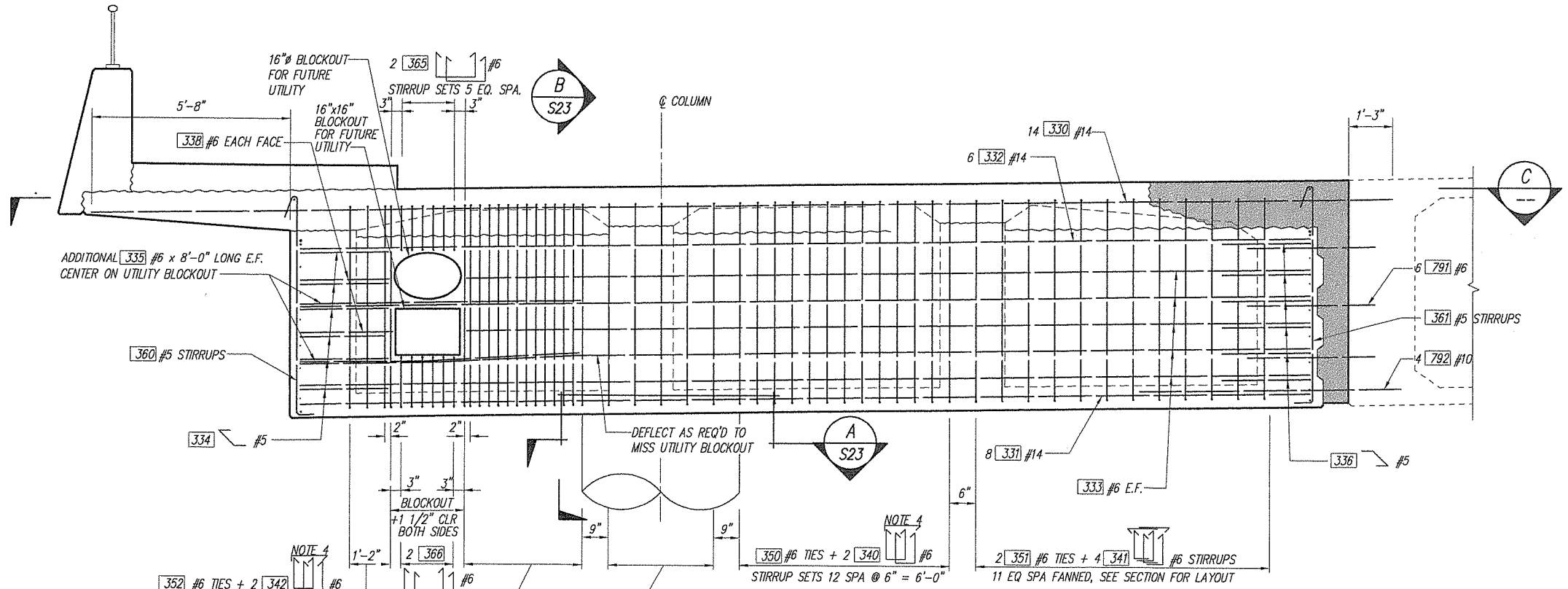

ELEVATION

VIEW NORMAL TO ℄ PIER

NOTE:

1. TOP AND BOTTOM MAT REINFORCEMENT NOT SHOWN FOR CLARITY.
2. CLOSURE
3. FOR CLOSURE DETAILS SEE DWG S62
4. ALTERNATE DIRECTION FOR EVERY OTHER TIE TYP.

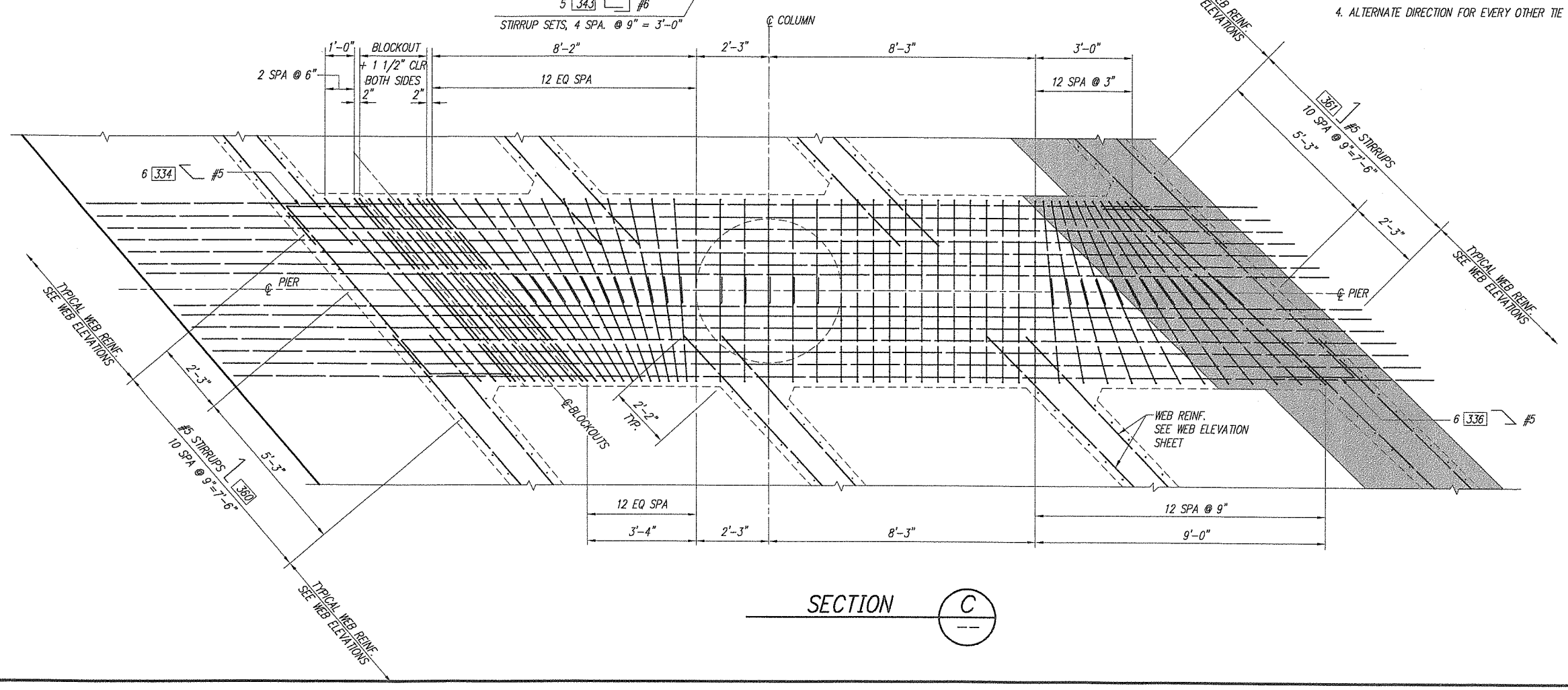

SECTION C

JOB #	JOB NAME	FILE PATH & NAME	PLOTTED DATE & TIME	UPDATED BY	PLOT SCALE	'PCP' FILE	PLOT VIEW
99680	N.E. 20 th AVE HIGHWAY 99	V:\BRIDGE H-P\N.E. HIGHWAY 99 (99406)\DESIGN\99680-S22.DWG	AUG. 02, 2001 12:55:43 PM	RICKT	1:1 (1:2)		PLOT

XREFS: X99680,

DESIGNED C. TOTTEN
DRAWN J. MILKES
CRP 392922
HOR. N/A
VERT. N/A
DATE FEB. 20, 2004
DWG: S22
SHEET 24 OF 78

CALL 48 HOURS BEFORE YOU DIG 1-800-553-4344 "It's the Law" CLARK COUNTY UTILITIES COORDINATING COUNCIL

DESIGN & ENGINEERING DIVISION

NE 20TH AVE/HGWY 99 REALIG.
CLARK COUNTY
PIER 3
WEST CROSSBEAM I

STATE OF WASHINGTON — RICHARD W. ROLL — STRUCTURAL — EXPIRES 2/10/2006

105 W. Evergreen Blvd., Suite 300
Vancouver, WA 98660-3123
Phone: (360) 737-4613
FAX: (360) 737-9601
Incorporated

111 SW 5th Avenue
Suite 2500
Portland, Oregon 97204
503-227-3251
Consulting Engineers

proud past, promising future

CLARK COUNTY WASHINGTON

Fed. Aid No.
STPF-4253(010)

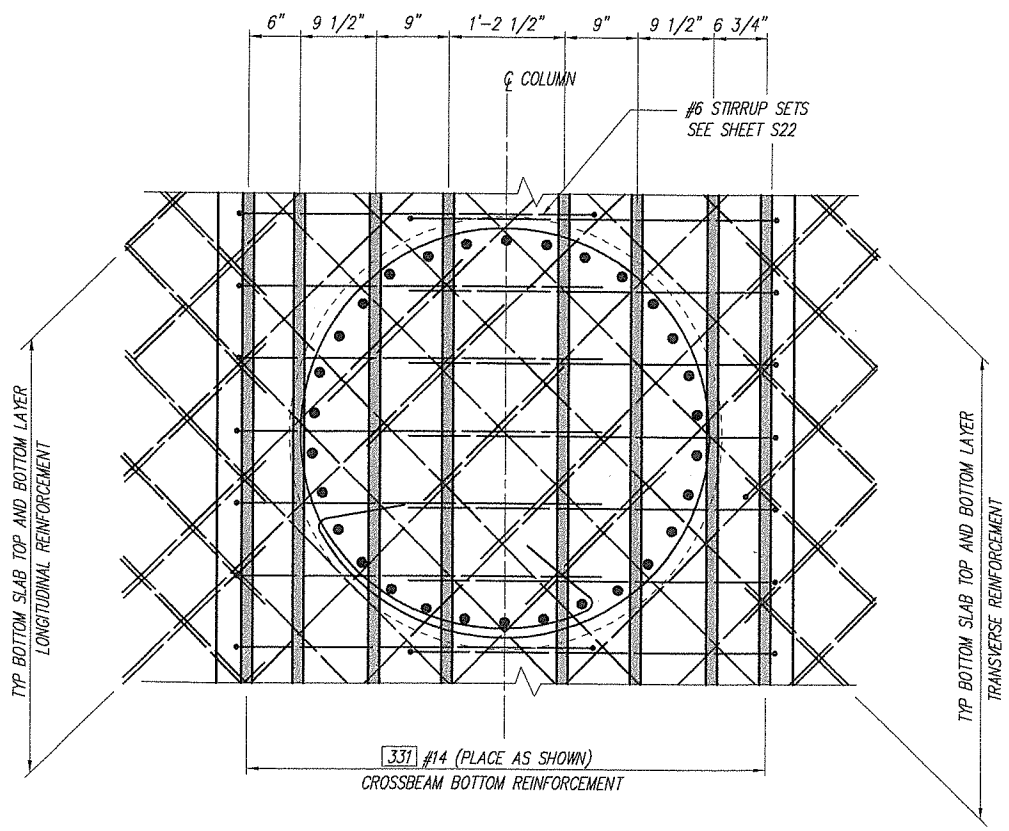

SECTION A S22

WEB REINFORCEMENT
NOT SHOWN FOR CLARITY,
SEE NOTE 6.

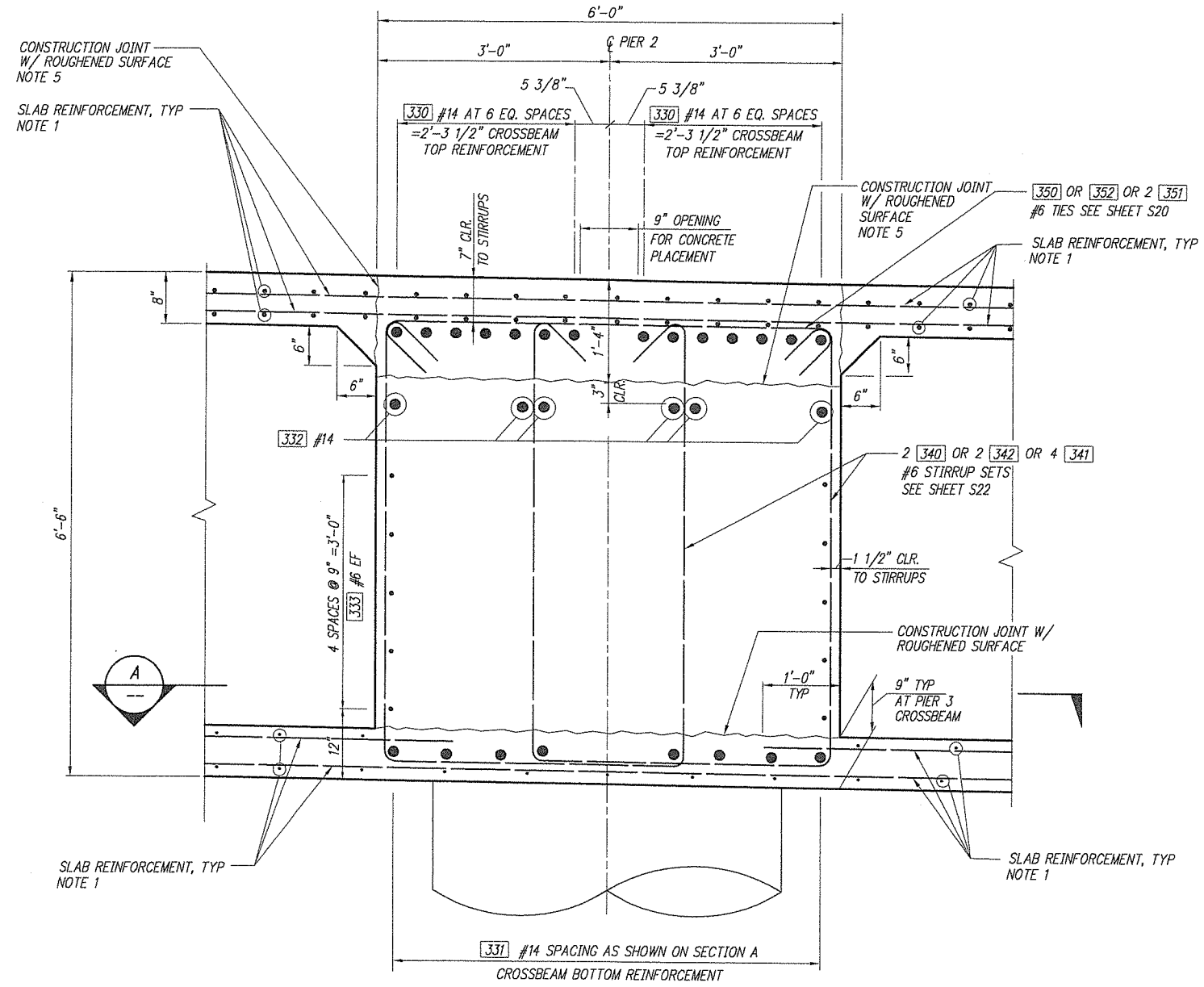

SECTION B S22

NOTES:

1. FOR TOP AND BOTTOM SLAB REINFORCEMENT BAR MARKS AND SPACING SEE SLAB REINFORCING PLANS.
2. #4 BOTTOM SLAB REINFORCEMENT MAYBE DEFLECTED TO AVOID COLUMN REINFORCEMENT.
3. FOR STIRRUP SPACING SEE DWG. S22.
4. FOR WEB LOCATION RELATIVE TO PIER ℄ SEE FRAMING PLAN.
5. CAST UPPER PORTION OF CROSSBEAM AFTER TOP SLAB IS CAST.

PLOTTED DATE & TIME	UPDATED BY	PLOT SCALE	'PCP' FILE	PLOT VIEW
JUN. 29, 2001 11:41:27 AM	ALINAE	1:1 (1:2)		PLOT

JOB #	JOB NAME	FILE PATH & NAME
99680	N.E. 20 th AVE HIGHWAY 99	V:\BRIDGE H-P\N.E. HIGHWAY 99 (99406)\DESIGN\99680-S19.DWG
XREFS: X99680.		

DESIGNED C. TOTTEN
DRAWN J. WILKES
CRP 393922
HOR. N/A
VERT. N/A
DATE FEB. 20, 2004
DWG. S23
SHEET 25 OF 78

CALL 48 HOURS BEFORE YOU DIG 1-800-553-4344 "It's the Law" CLARK COUNTY UTILITIES COORDINATING COUNCIL

DESIGN & ENGINEERING DIVISION
NE 20TH AVE/HGWY 99 REALIG.
CLARK COUNTY
PIER 3
WEST CROSSBEAM II

STATE OF WASHINGTON
STEVEN R. HASLAM
STATE REGISTERED PROFESSIONAL ENGINEER
EXPIRES 2/10/2005

otak Incorporated
105 W. Evergreen Blvd., Suite 300
Vancouver, WA 98660-3123
Phone: (360) 737-8613
FAX: (360) 737-8661

kpff Consulting Engineers
111 SW 5th Avenue
Suite 2500
Portland, Oregon 97204
503-227-3251

proud past, promising future
CLARK COUNTY
WASHINGTON

Fed. Aid No.
STPF-4253(010)

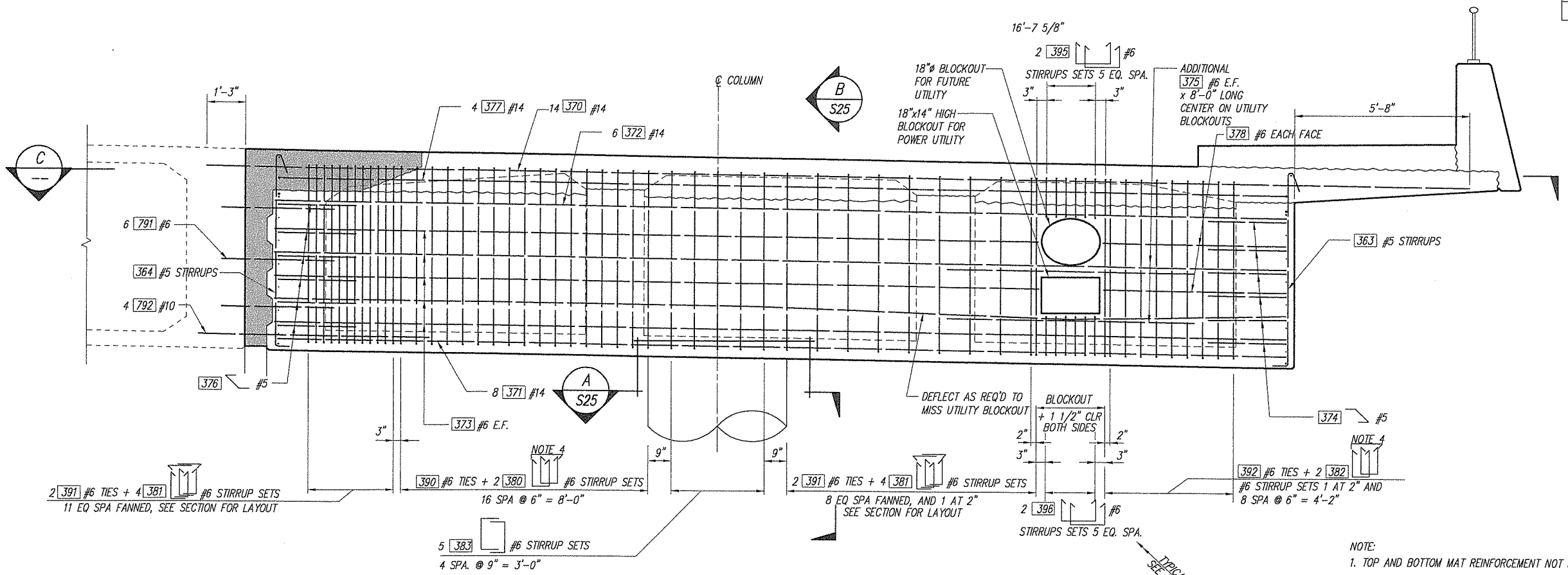

ELEVATION

VIEW NORMAL TO ℄ PIER

NOTE:

1. TOP AND BOTTOM MAT REINFORCEMENT NOT SHOWN FOR CLARITY.
2. CLOSURE
3. FOR CLOSURE DETAILS SEE DWG S62
4. ALTERNATE DIRECTION FOR EVERY OTHER TIE TYP.

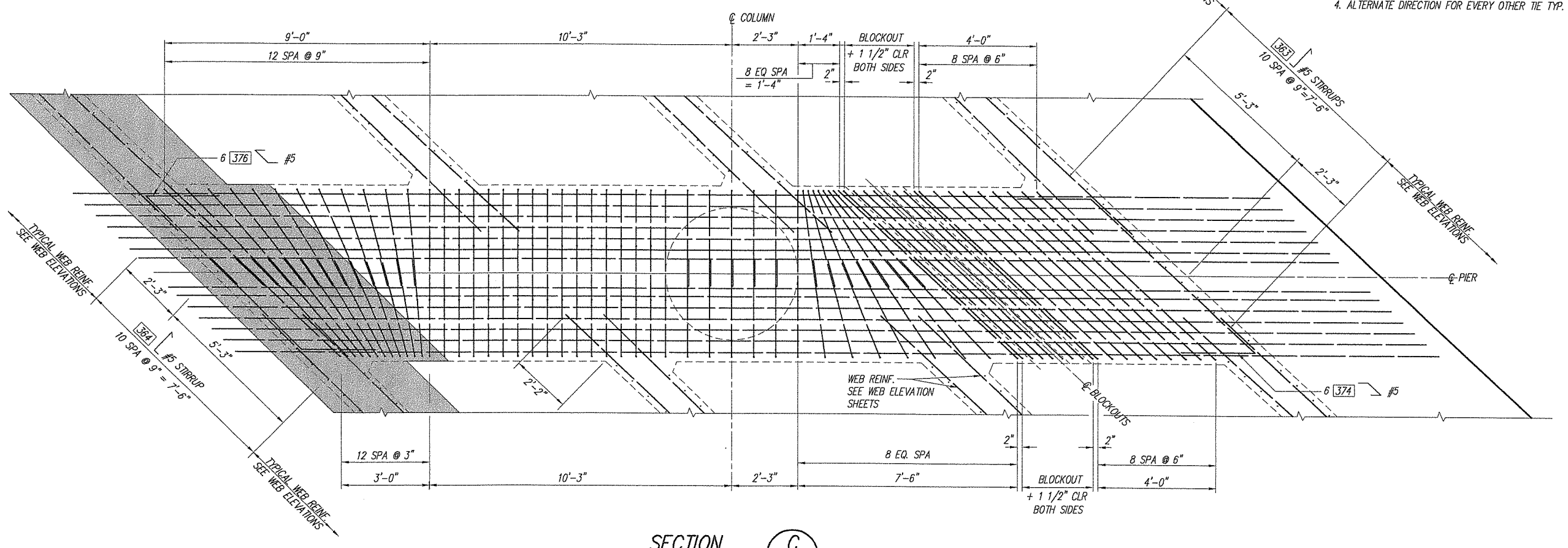

SECTION C

DESIGNED G. TOTTEN
DRAWN J. MUNES
CRP 3928
HOR. N/A
VERT. N/A
DATE FEB. 20, 2004
DWG: S24
SHEET 26 OF 78

CALL 48 HOURS BEFORE YOU DIG 1-800-553-4344 "It's the Law" CLARK COUNTY UTILITIES COORDINATING COUNCIL

DESIGN & ENGINEERING DIVISION
NE 20TH AVE/HGWY 99 REALIG.
CLARK COUNTY
PIER 3
EAST CROSSBEAM I

STATE OF WASHINGTON
JOHN P. STAUFFER
EXPIRES 4/01/2006

otak INC. 105 W. Evergreen Blvd., Suite 500 Vancouver, WA 98660-3123 Phone: (360) 737-8513 Fax: (360) 737-9881 Incorporated

kpff 111 SW 5th Avenue Suite 2500 Portland, Oregon 97204 503-227-3251 Consulting Engineers

proud past, promising future
CLARK COUNTY WASHINGTON

JOB #	JOB NAME	FILE PATH & NAME	PLOTTED DATE & TIME	UPDATED BY	PLOT SCALE	'PCP' FILE	PLOT VIEW
99680	N.E. 20 th AVE HIGHWAY 99	V:\BRIDGE H-P\N.E. HIGHWAY 99 (99406)\DESIGN\99680-S24.DWG	JUL. 31, 2001 8:02:03 AM	RICKT	1:1 (1:2)		PLOT

XREFS: X99680,

Fed. Aid No.
STPF-4253(010)

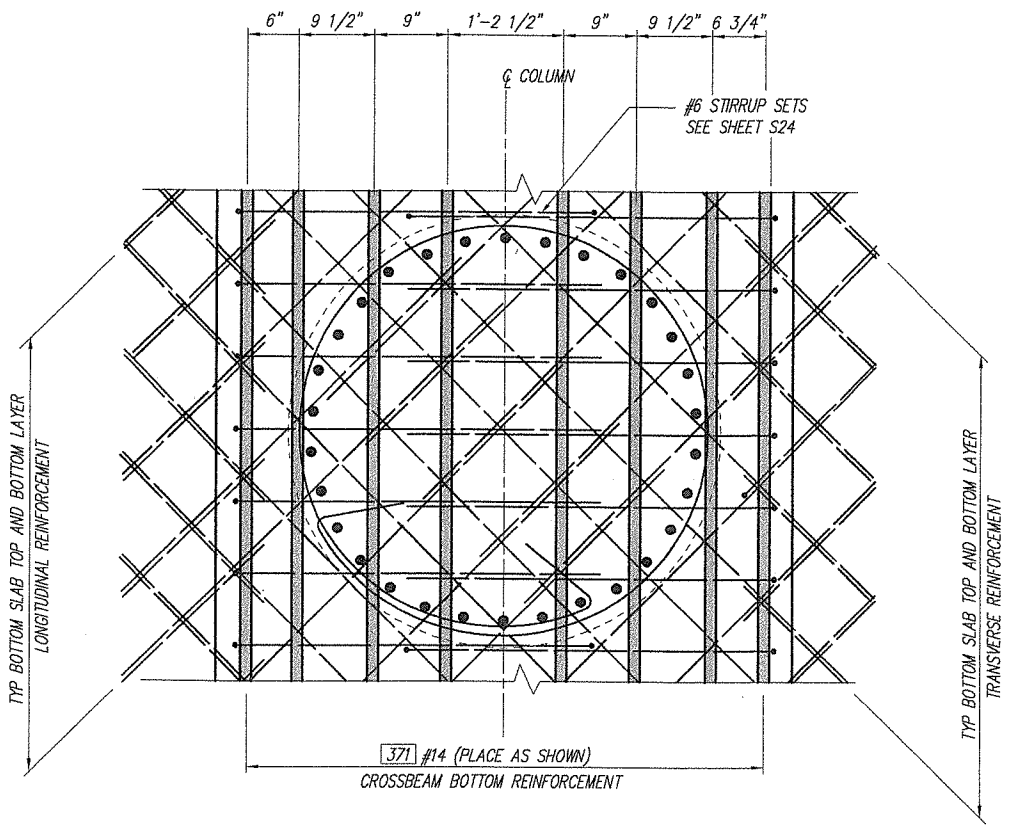

SECTION A S24

WEB REINFORCEMENT NOT SHOWN FOR CLARITY, SEE NOTE 6.

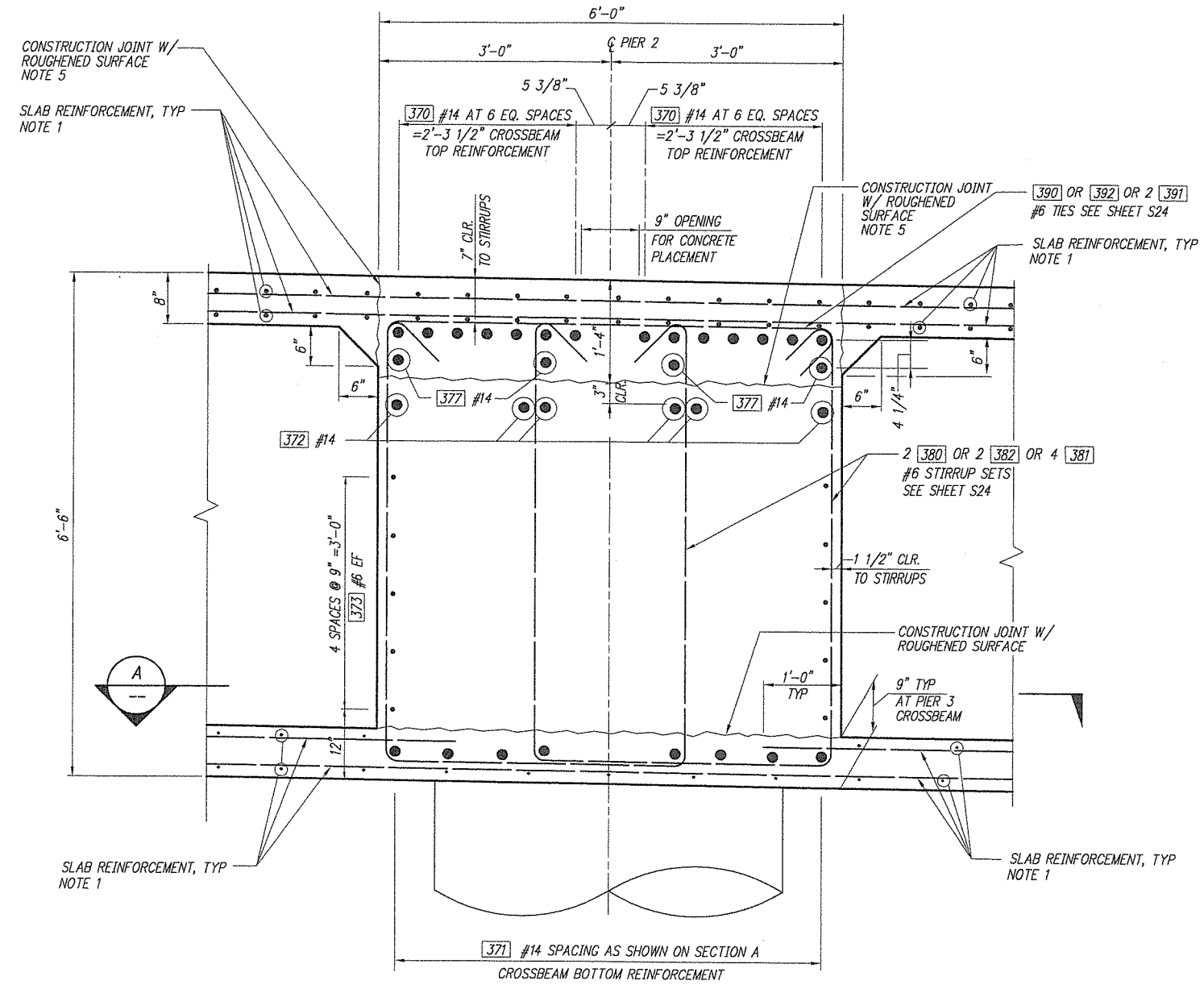

SECTION B S24

NOTES:

1. FOR TOP AND BOTTOM SLAB REINFORCEMENT BAR MARKS AND SPACING SEE SLAB REINFORCING PLANS.
2. #4 BOTTOM SLAB REINFORCEMENT MAYBE DEFLECTED TO AVOID COLUMN REINFORCEMENT.
3. FOR STIRRUP SPACING SEE DWG. S24.
4. FOR WEB LOCATION RELATIVE TO PIER ℄ SEE FRAMING PLAN.
5. CAST UPPER PORTION OF CROSSBEAM AFTER TOP SLAB IS CAST.

DESIGNED C. TOTTEN
DRAWN J. WILKES
CRP 393932
HOR. N/A
VERT. N/A
DATE FEB. 20, 2004
DWG: S25
SHEET 27 OF 78

CALL 48 HOURS BEFORE YOU DIG 1-800-553-4344 "It's the Law" CLARK COUNTY UTILITIES COORDINATING COUNCIL

DESIGN & ENGINEERING DIVISION
NE 20TH AVE/HGWY 99 REALIG.
CLARK COUNTY
PIER 3
EAST CROSSBEAM II

STATE OF WASHINGTON 28853 REGISTERED PROFESSIONAL ENGINEER
EXPIRES 12/31/2006

olak Incorporated
105 N. Evergreen Blvd., Suite 300
Vancouver, WA 98660-3123
Phone: (360) 737-8445
FAX: (360) 737-9651

kpff Consulting Engineers
111 SW 5th Avenue
Suite 2500
Portland, Oregon 97204
503-227-5231

proud past, promising future

CLARK COUNTY
WASHINGTON

JOB #	JOB NAME	FILE PATH & NAME	PLOTTED DATE & TIME	UPDATED BY	PLOT SCALE	'PCP' FILE	PLOT VIEW
99680	N.E. 20 th AVE HIGHWAY 99	V:\BRIDGE H-P\N.E. HIGHWAY 99 (99406)\DESIGN\99680-S19.DWG	JUN. 29, 2001 11:41:27 AM	ALINAE	1:1 (1:2)		PLOT

XREFS: X99680,

Fed. Aid No.
STPF-4253(010)

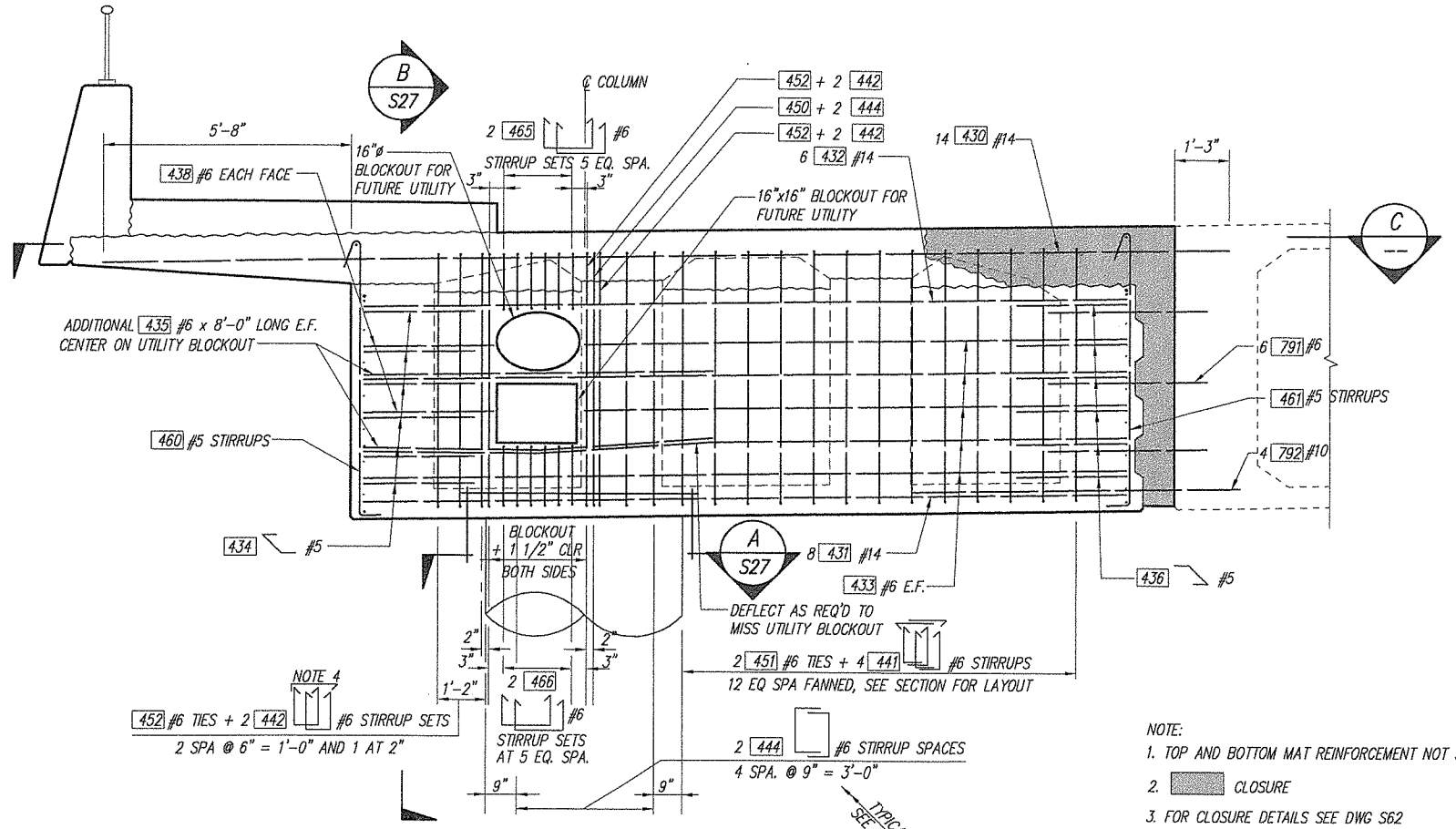

ELEVATION

VIEW NORMAL TO ℄ PIER

NOTE:

1. TOP AND BOTTOM MAT REINFORCEMENT NOT SHOWN FOR CLARITY.
2. CLOSURE
3. FOR CLOSURE DETAILS SEE DWG S62
4. ALTERNATE DIRECTION FOR EVERY OTHER TIE TYP.

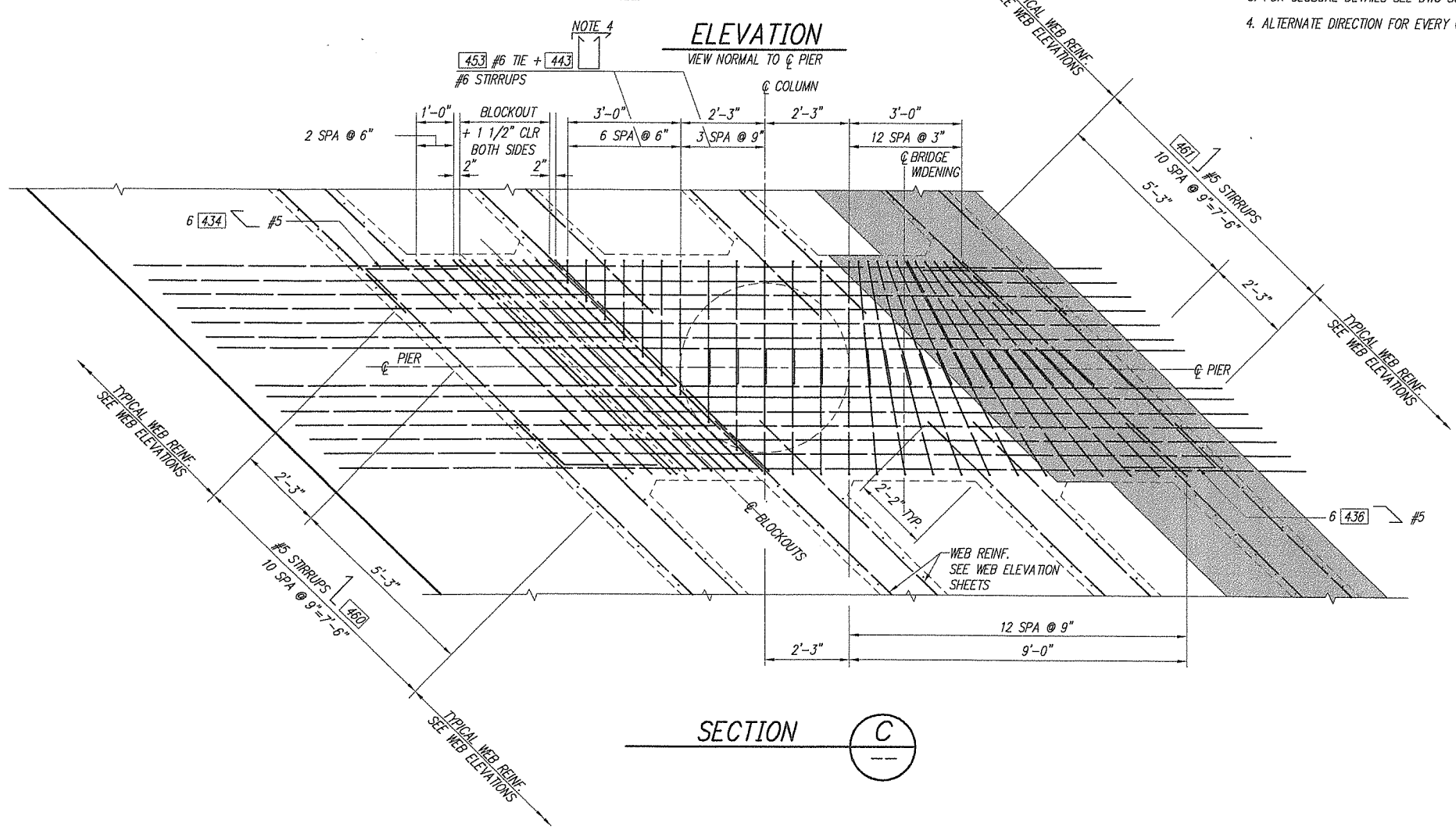

SECTION C

JOB #	JOB NAME	FILE PATH & NAME	PLOTTED DATE & TIME	UPDATED BY	PLOT SCALE	'PCP' FILE	PLOT VIEW
99680	N.E. 20 th AVE HIGHWAY 99	V:\BRIDGE H-P\N.E. HIGHWAY 99 (99406)\DESIGN\99680-S26.DWG	AUG. 02, 2001 11:54:09 AM	RICKT	1:1 (1:2)		PLOT

XREFS: X99680.

DESIGNED C. TOTTEN
DRAWN L. HILKES
CRP 392922
HOR. N/A
VERT. N/A
DATE FEB. 20, 2004
DWG: S26
SHEET 28 OF 78

CALL 48 HOURS BEFORE YOU DIG 1-800-553-4344 "It's the Law" CLARK COUNTY UTILITIES COORDINATING COUNCIL

DESIGN & ENGINEERING DIVISION

NE 20TH AVE/HGWY 99 REALIG.
CLARK COUNTY
PIER 4
WEST CROSSBEAM I

STATE OF WASHINGTON REGISTERED PROFESSIONAL ENGINEER
EXPIRES 2/10/2006

105 W. Evergreen Blvd., Suite 300
Vancouver, WA 98660-3123
Phone: (360) 737-8615
FAX: (360) 737-4851

otak Incorporated

111 SW 5th Avenue
Suite 2500
Portland, Oregon 97204
503-227-3251

kpff Consulting Engineers

proud past, promising future

CLARK COUNTY
WASHINGTON

Fed. Aid No.
STPF-4253(010)

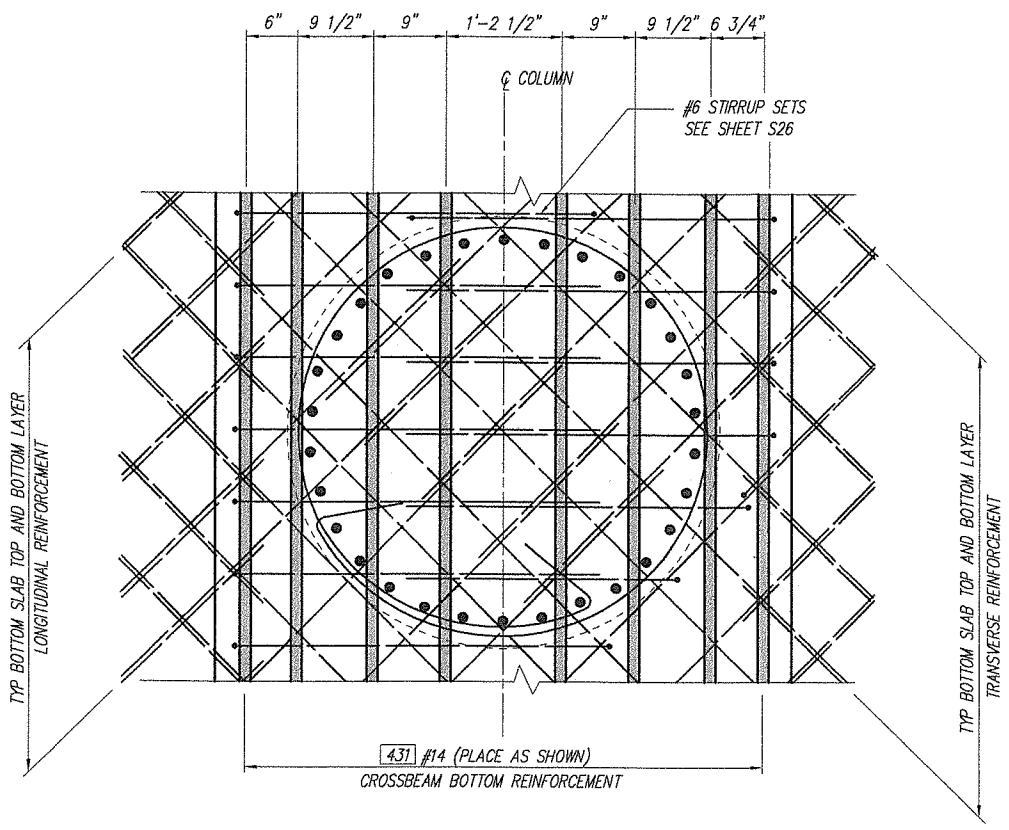

SECTION A / S26

WEB REINFORCEMENT NOT SHWN
FOR CLARITY, SEE NOTE 4.

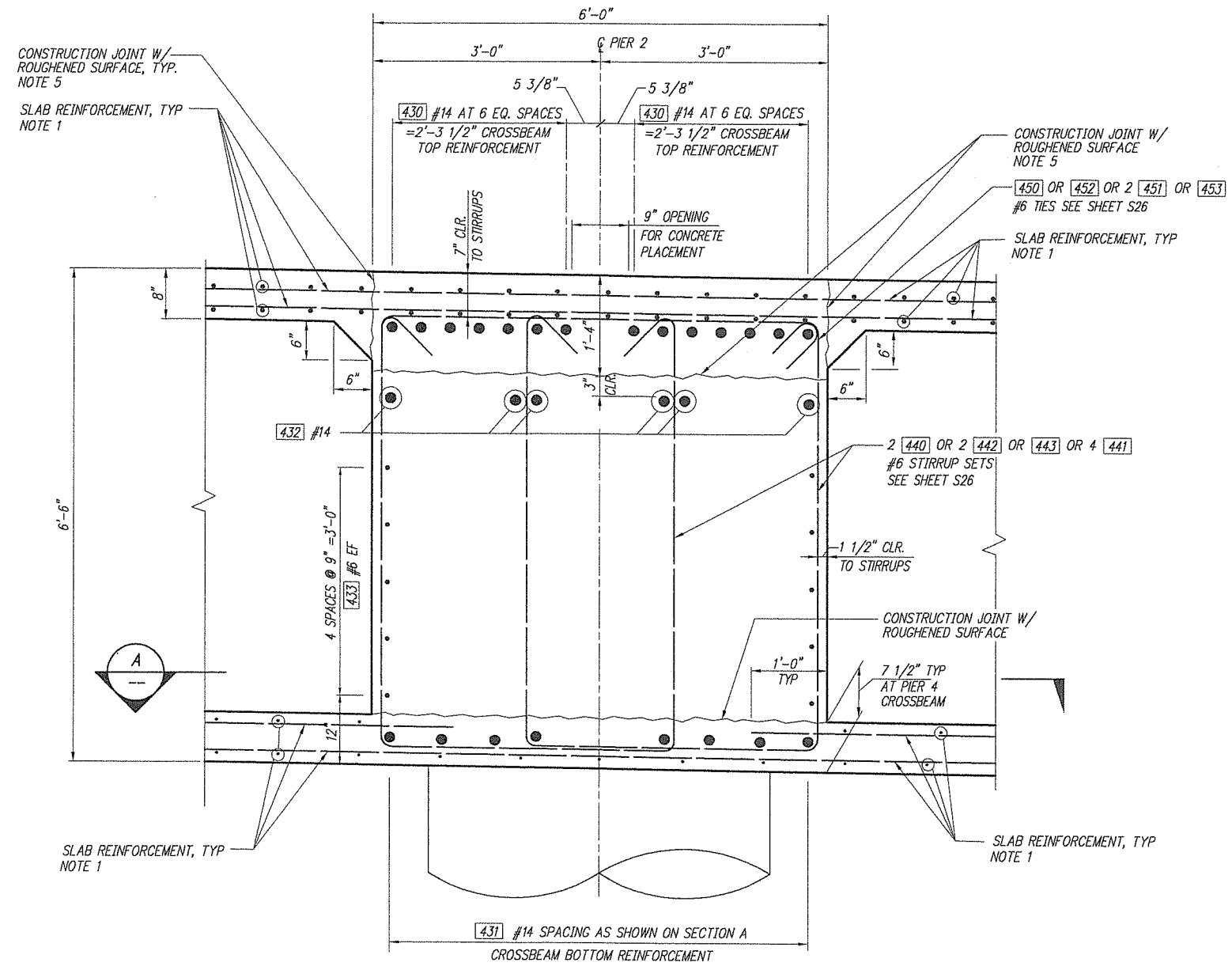

SECTION B / S26

NOTES:

1. FOR TOP AND BOTTOM SLAB REINFORCEMENT BAR MARKS AND SPACING SEE SLAB REINFORCING PLANS.
2. #4 BOTTOM SLAB REINFORCEMENT MAYBE DEFLECTED TO AVOID COLUMN REINFORCEMENT.
3. FOR STIRRUP SPACING SEE DWG. S26.
4. FOR WEB LOCATION RELATIVE TO PIER ℄ SEE FRAMING PLAN.
5. CAST UPPER PORTION OF CROSSBEAM AFTER TOP SLAB IS CAST.

PLOTTED DATE & TIME	UPDATED BY	PLOT SCALE	'PCP' FILE	PLOT VIEW
JUN. 29, 2001 11:41:27 AM	ALINAE	1:1 (1:2)		PLOT

FILE PATH & NAME
V:\BRIDGE H-P\N.E. HIGHWAY 99 (99406)\DESIGN\99680-S19.DWG

JOB #	JOB NAME
99680	N.E. 20 th AVE HIGHWAY 99

XREFS: X99680,

DESIGNED C. TOTTEN
DRAWN J. WILKES
CRP 393932
HOR. N/A
VERT. N/A
DATE FEB. 20, 2004
DWG: S27
SHEET 29 OF 78

CALL 48 HOURS BEFORE YOU DIG 1-800-553-4344 "It's the Law" CLARK COUNTY UTILITIES COORDINATION COUNCIL

DESIGN & ENGINEERING DIVISION
NE 20TH AVE/HGWY 99 REALIG.
CLARK COUNTY
PIER 4
WEST CROSSBEAM II

STATE OF WASHINGTON
JAMES H. HEAVEN
REGISTERED PROFESSIONAL ENGINEER
EXPIRES 4/19/2005

105 W. Evergreen Blvd., Suite 300
Vancouver, WA 98660-3123
Phone: (360) 737-4067
Fax: (360) 737-9831
otak Incorporated

111 SW 5th Avenue
Suite 2500
Portland, Oregon 97204
503-227-3251
kpff Consulting Engineers

proud past, promising future
CLARK COUNTY
WASHINGTON

Fed. Aid No.
STPF-4253(010)

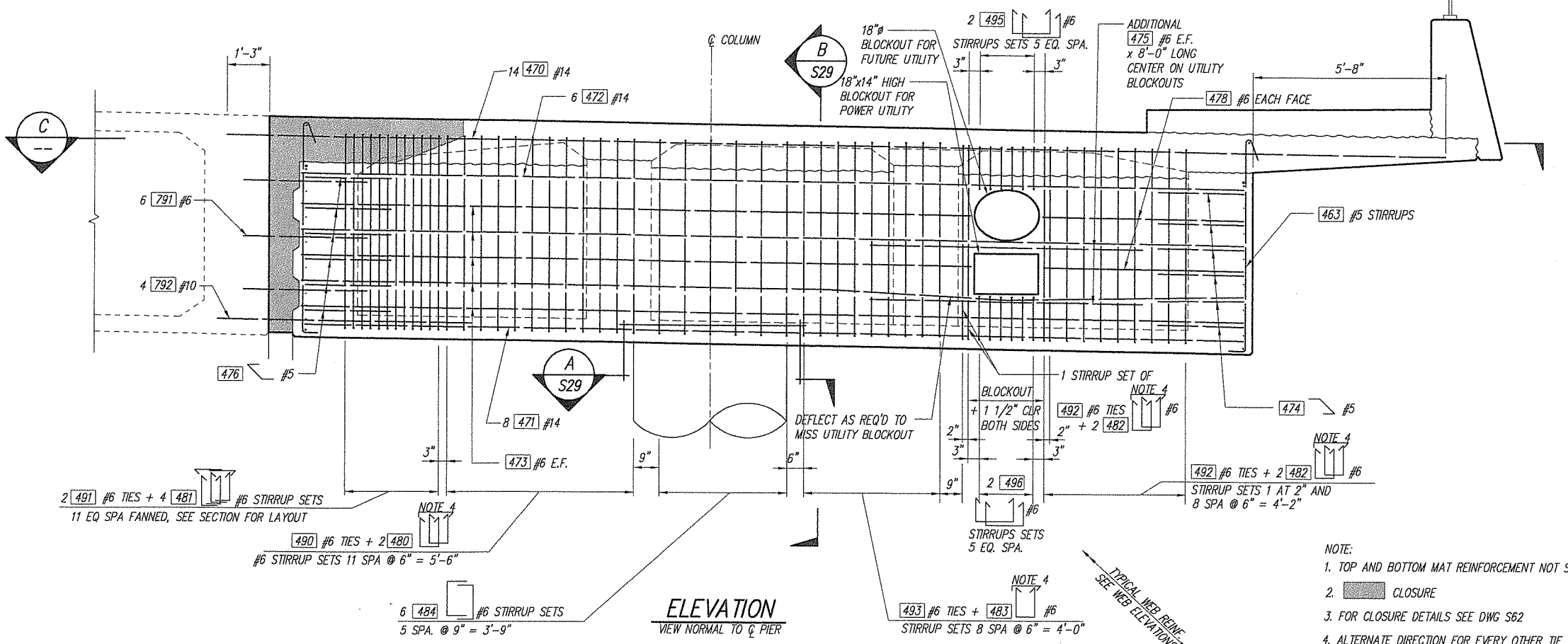

ELEVATION
VIEW NORMAL TO ℄ PIER

NOTE:
1. TOP AND BOTTOM MAT REINFORCEMENT NOT SHOWN FOR CLARITY.
2. CLOSURE
3. FOR CLOSURE DETAILS SEE DWG S62
4. ALTERNATE DIRECTION FOR EVERY OTHER TIE TYP.

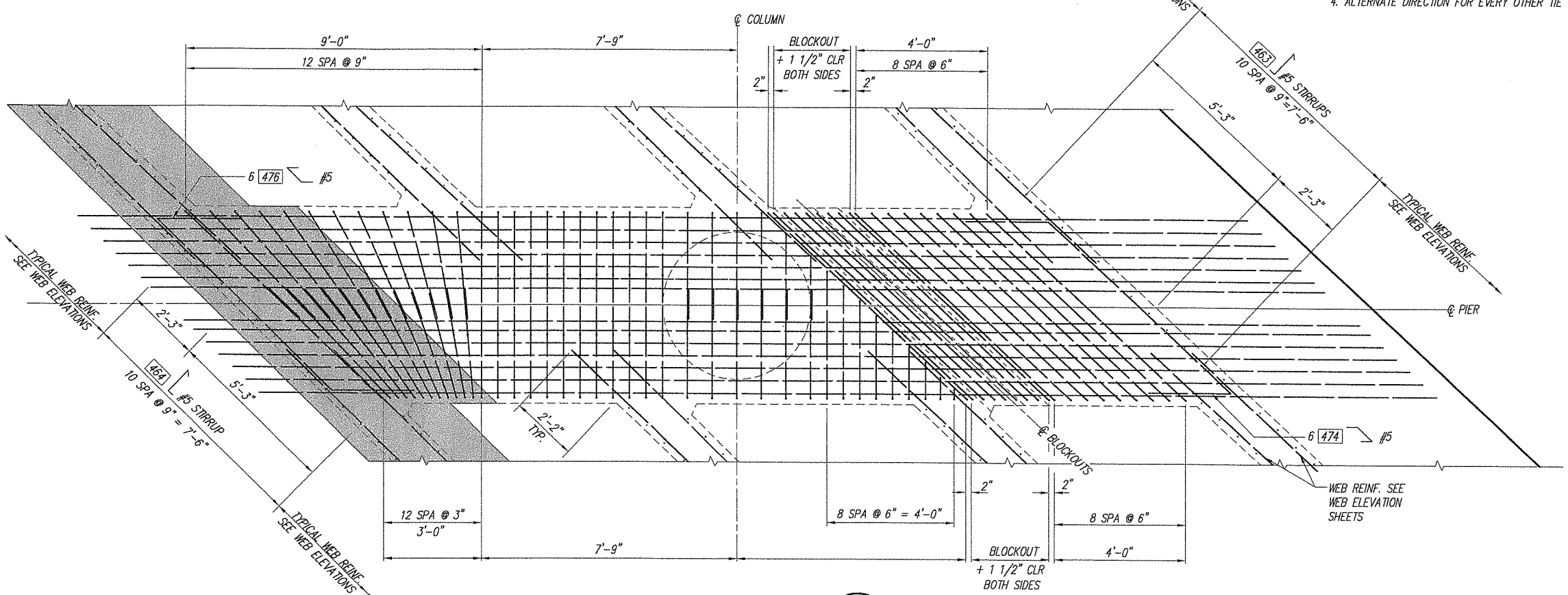

SECTION C

DESIGNED C. TOTTEN
DRAWN J. WILKES
CRP 39822
HOR. N/A
VERT. N/A
DATE FEB. 20, 2004
DWG: S28
SHEET 30 OF 78

CALL 48 HOURS BEFORE YOU DIG 1-800-553-4344 "It's the Law" CLARK COUNTY UTILITIES COORDINATING COUNCIL

DESIGN & ENGINEERING DIVISION
NE 20TH AVE/HGWY 99 REALIG.
CLARK COUNTY
PIER 4
EAST CROSSBEAM I

STATE OF WASHINGTON 26595 REGISTERED PROFESSIONAL ENGINEER
EXPIRES 4/19/2006

otak Incorporated
105 N. Evergreen Blvd., Suite 500
Vancouver, WA 98660-3128
Phone: (360) 737-8513
FAX: (360) 737-9881

kpff Consulting Engineers
111 SW 5th Avenue
Suite 2500
Portland, Oregon 97204
503-227-3251

proud past, promising future
CLARK COUNTY WASHINGTON

JOB #	JOB NAME	FILE PATH & NAME	PLOTTED DATE & TIME	UPDATED BY	PLOT SCALE	'PCP' FILE	PLOT VIEW
99680	N.E. 20 th AVE HIGHWAY 99	V:\BRIDGE H-P\N.E. HIGHWAY 99 (99406)\DESIGN\99680-S28.DWG	JUL. 31, 2001 8:57:02 AM	RICKT	1:1 (1:2)		PLOT

XREFS: X99680,

Fed. Aid No.
STPF-4253(010)

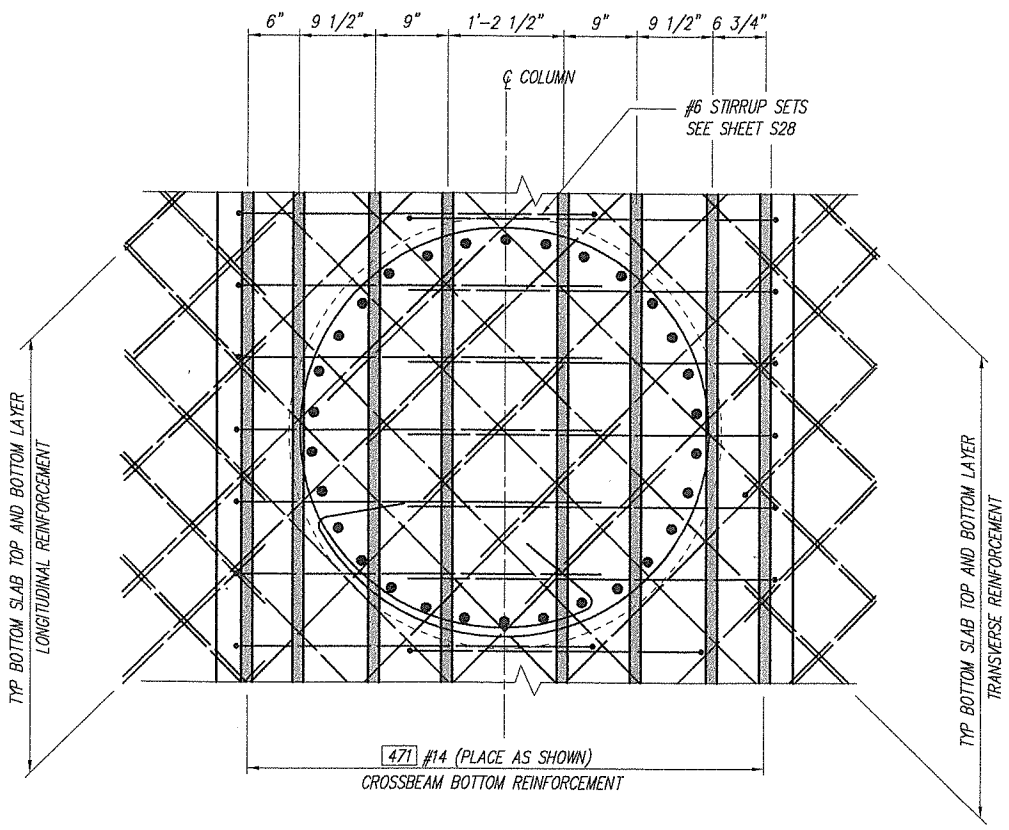

SECTION A / S28

WEB REINFORCEMENT NOT SHOWN FOR CLARITY, SEE NOTE 4.

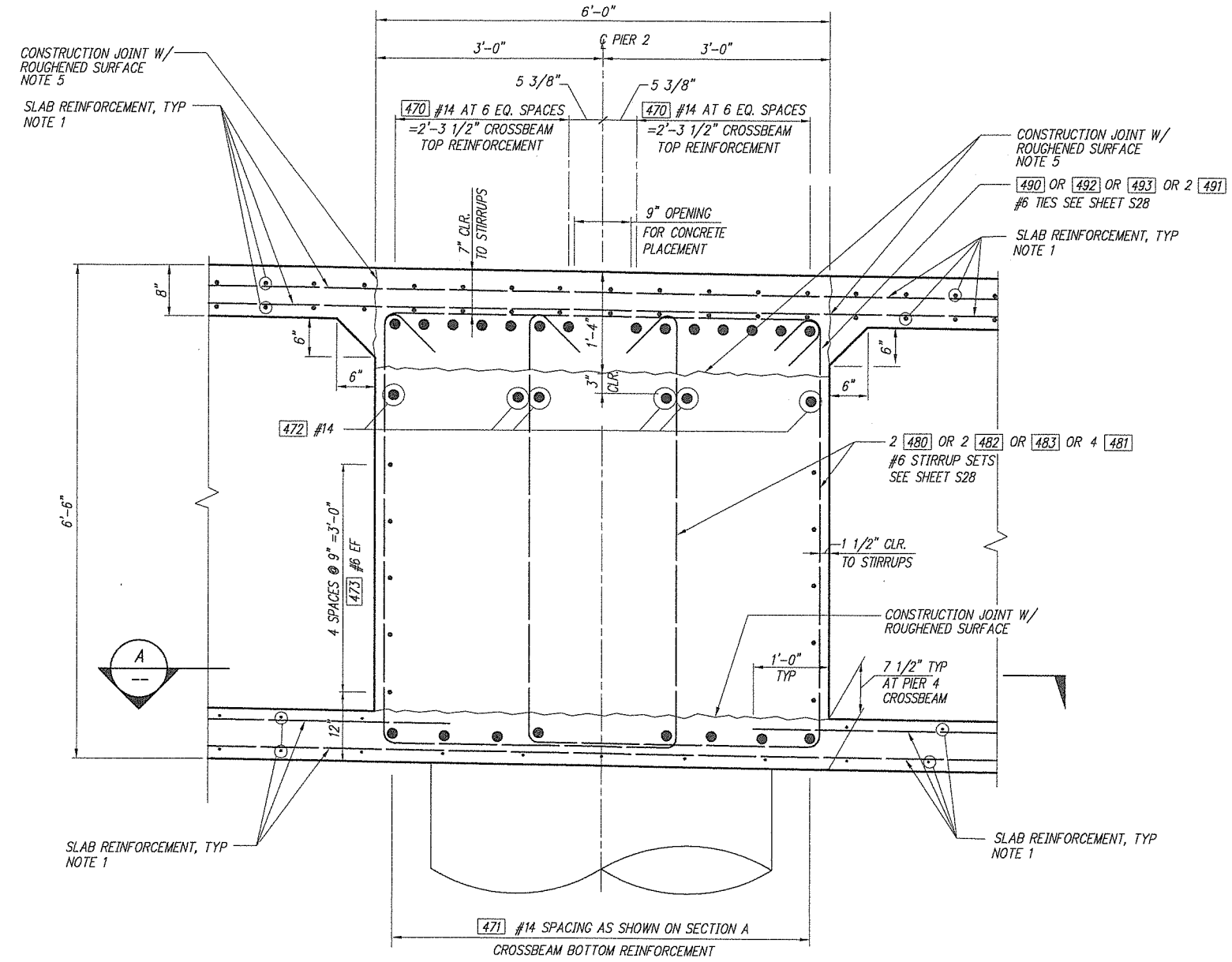

SECTION B / S28

NOTES:

1. FOR TOP AND BOTTOM SLAB REINFORCEMENT BAR MARKS AND SPACING SEE SLAB REINFORCING PLANS.
2. #4 BOTTOM SLAB REINFORCEMENT MAYBE DEFLECTED TO AVOID COLUMN REINFORCEMENT.
3. FOR STIRRUP SPACING SEE DWG. S28.
4. FOR WEB LOCATION RELATIVE TO PIER ℄ SEE FRAMING PLAN.
5. CAST UPPER PORTION OF CROSSBEAM AFTER TOP SLAB IS CAST.

PLOTTED DATE & TIME	UPDATED BY	PLOT SCALE	'PCP' FILE	PLOT VIEW
JUN. 29, 2001 11:41:27 AM	ALINAE	1:1 (1:2)		PLOT

JOB #	JOB NAME	FILE PATH & NAME
99680	N.E. 20 th AVE HIGHWAY 99	V:\BRIDGE H-P\N.E. HIGHWAY 99 (99406)\DESIGN\99680-S19.DWG
XREFS: X99680,		

DESIGNED C. TOTTEN
DRAWN J. WILKES
CRP 392932
HOR. N/A
VERT. N/A
DATE FEB. 20, 2004
DWG: S29
SHEET 31 OF 78

CALL 48 HOURS BEFORE YOU DIG 1-800-553-4344 "It's the Law" CLARK COUNTY UTILITIES COORDINATING COUNCIL

DESIGN & ENGINEERING DIVISION

NE 20TH AVE/HGWY 99 REALIG.
CLARK COUNTY
PIER 4
EAST CROSSBEAM II

STATE OF WASHINGTON GARY A. TOTTEN 26526 REGISTERED PROFESSIONAL ENGINEER
2/19/04
EXPIRES 2/12/2005

105 W. Evergreen Blvd., Suite 500
Vancouver, WA 98660-3128
Phone: (360) 737-4613
FAX: (360) 737-4631
otak Incorporated

111 SW 5th Avenue
Suite 2500
Portland, Oregon 97204
503-227-3251
kpff Consulting Engineers

proud past, promising future

CLARK COUNTY WASHINGTON

Fed. Aid No.
STPF-4253(010)

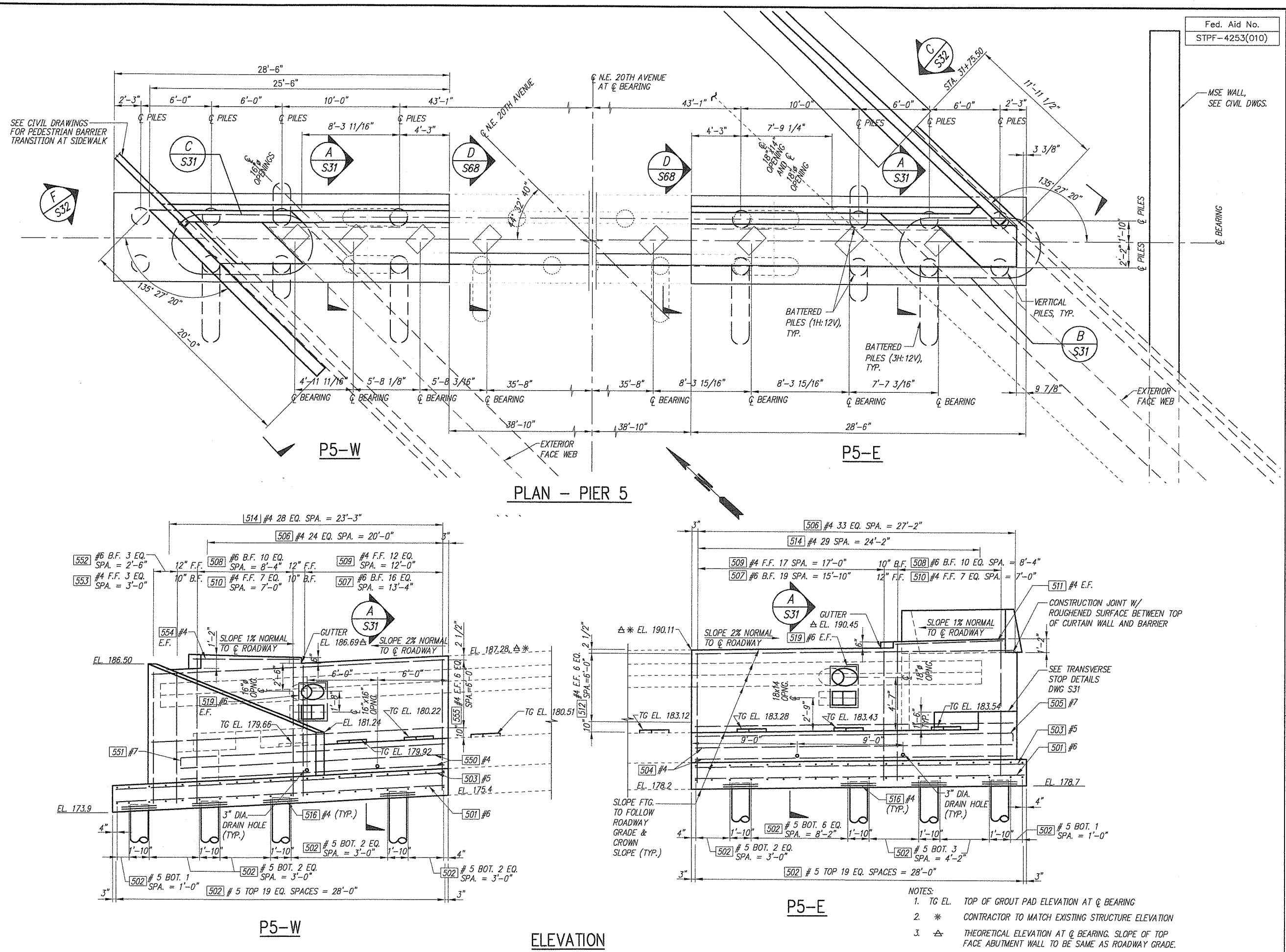

NOTES:

1. TG EL. — TOP OF GROUT PAD ELEVATION AT ℄ BEARING
2. ✳ — CONTRACTOR TO MATCH EXISTING STRUCTURE ELEVATION
3. △ — THEORETICAL ELEVATION AT ℄ BEARING. SLOPE OF TOP FACE ABUTMENT WALL TO BE SAME AS ROADWAY GRADE.
4. P5-W = PIER 5 WEST ADDITION, P5-E = PIER 5 EAST ADDITION

DESIGNED C. TOTTEN
DRAWN J. WILKES
CRP 39922
HOR. N/A
VERT. N/A
DATE FEB. 20, 2004
DWG: S30
SHEET 32 OF 78

CALL 48 HOURS BEFORE YOU DIG 1-800-553-4344 "It's the Law" CLARK COUNTY UTILITIES COORDINATING COUNCIL

DESIGN & ENGINEERING DIVISION

NE 20TH AVE/HGWY 99 REALIG. CLARK COUNTY

PIER 5 - PLAN AND ELEVATION

STATE OF WASHINGTON — STEVEN R. HASLTON — 35885 — REGISTERED PROFESSIONAL ENGINEER — EXPIRES 2/16/2006

otak Incorporated
105 W. Evergreen Blvd., Suite 300
Vancouver, WA 98660-3183
Phone: (360) 737-8613
FAX: (360) 737-9651

kpff Consulting Engineers
111 SW 5th Avenue
Suite 2500
Portland, Oregon 97204
503-227-3251

proud past, promising future

CLARK COUNTY WASHINGTON

PLOTTED DATE & TIME	UPDATED BY	PLOT SCALE	'PCP' FILE	PLOT VIEW
-	---	1=1	---	---

FILE PATH & NAME: D:\2-PROJECTS\99680\99680-S30.DWG

JOB #	JOB NAME
99680	N.E. HIGHWAY 99

XREFS: XMSP1A, XSURV, XBRIDGE, X99680

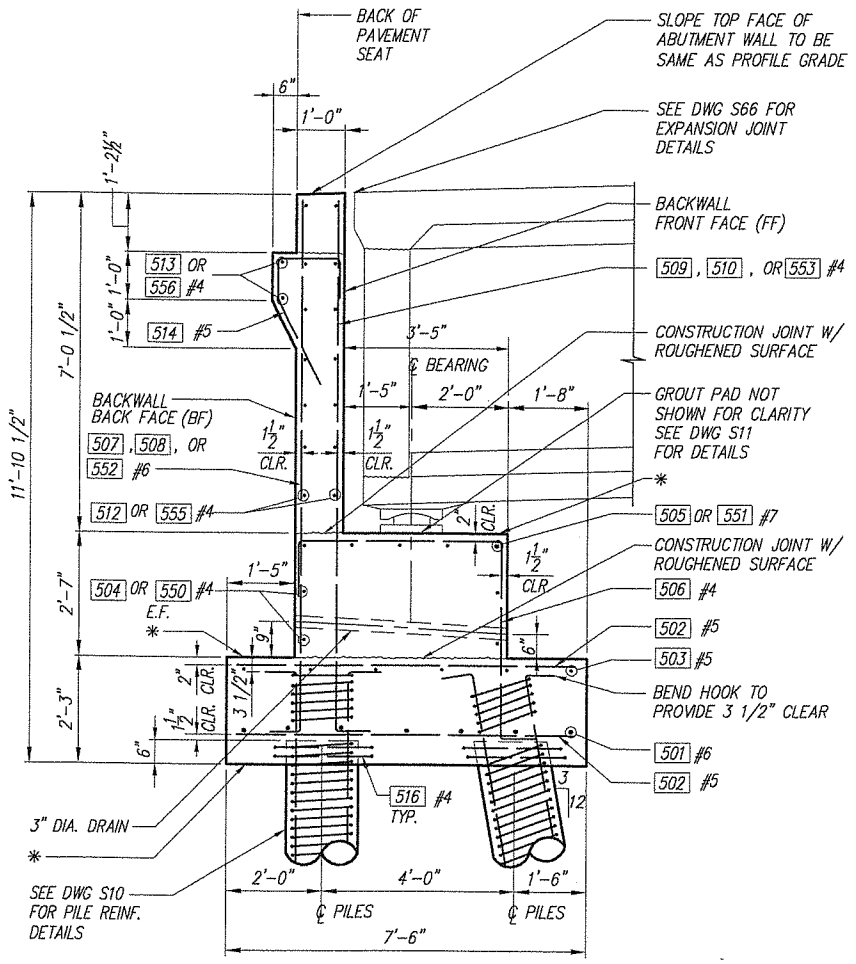

* SLOPE TO BE SAME AS ROADWAY GRADE.

SECTION A / S30

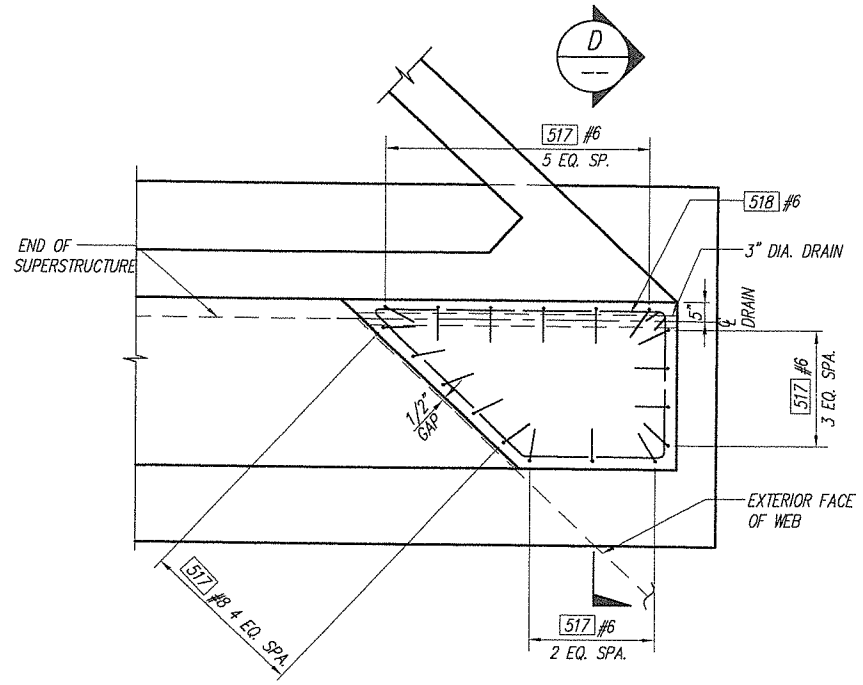

PARTIAL PLAN B / S30
(EAST TRANSVERSE STOP)

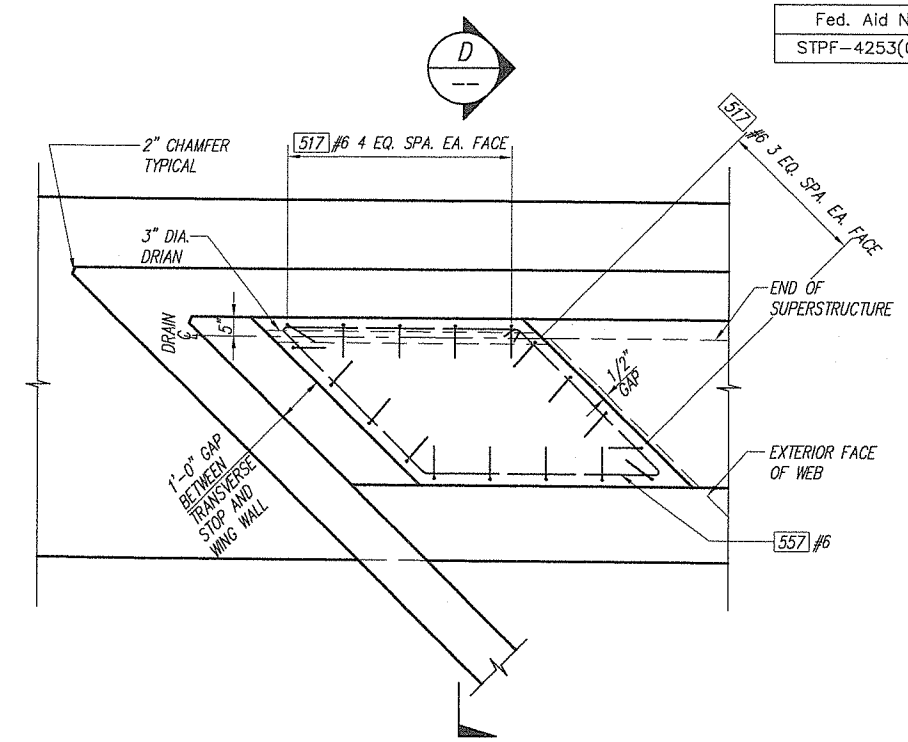

PARTIAL PLAN C / S30
(WEST TRANSVERSE STOP)

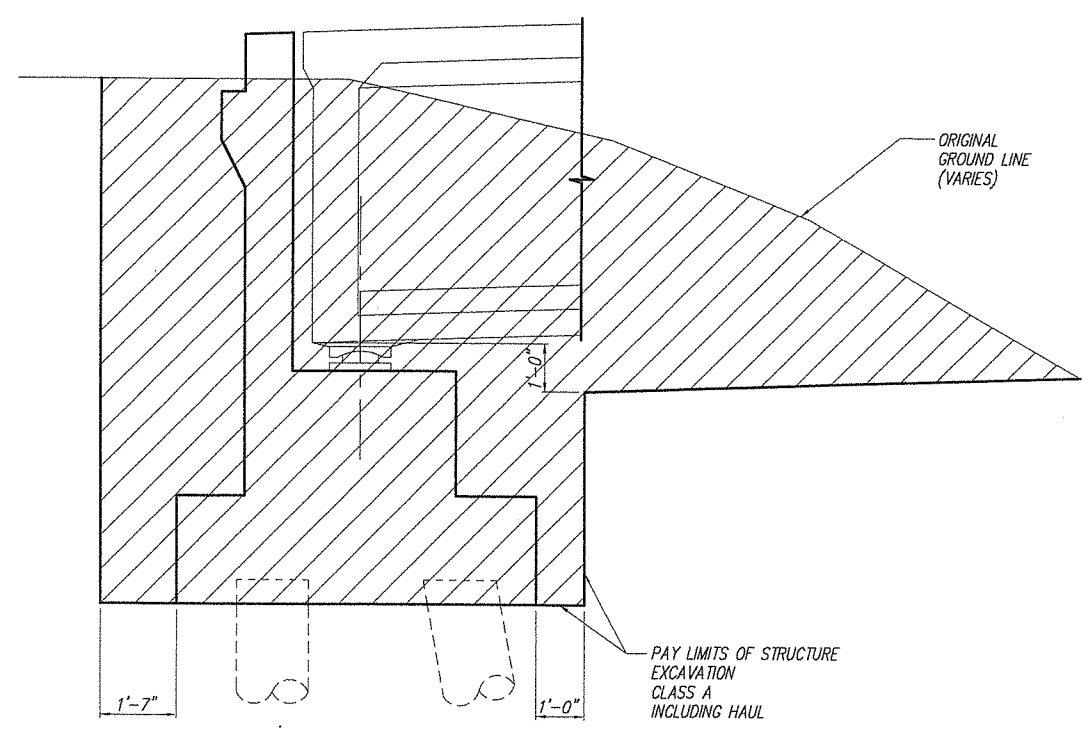

SECTION E

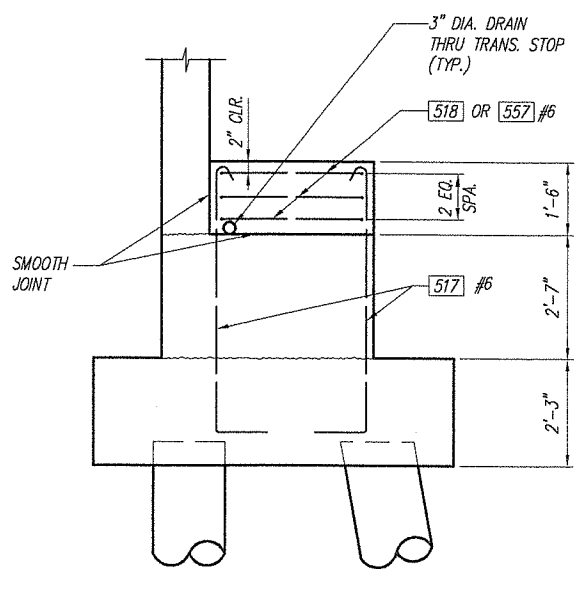

SECTION D

Fed. Aid No.
STPF-4253(010)

DESIGNED C. TOTTEN
DRAWN J. WILKES
CRP 392922
HOR. N/A
VERT. N/A
DATE FEB. 20, 2004
DWG. S31
SHEET 33 OF 78

CALL 48 HOURS BEFORE YOU DIG 1-800-553-4344 "It's the Law" CLARK COUNTY UTILITIES COORDINATING COUNCIL

DESIGN & ENGINEERING DIVISION

NE 20TH AVE/HGWY 99 REALIG.
CLARK COUNTY
PIER 5
SECTIONS AND DETAILS I

STATE OF WASHINGTON
STEVEN R. KRASAYEN
22850
REGISTERED PROFESSIONAL ENGINEER
EXPIRES 2/10/2005

103 W. Evergreen Blvd., Suite 300
Vancouver, WA 98660-3123
Phone: (360) 737-8813
FAX: (360) 737-9661
Incorporated

111 SW 5th Avenue
Suite 2500
Portland, Oregon 97204
503-227-3251
Consulting Engineers

proud past, promising future

CLARK COUNTY
WASHINGTON

JOB #	JOB NAME	FILE PATH & NAME	PLOTTED DATE & TIME	UPDATED BY	PLOT SCALE	"PCP" FILE	PLOT VIEW
99680	N.E. 20 th AVE HIGHWAY 99	V:\BRIDGE H-P\N.E. HIGHWAY 99 (99406)\DESIGN\99680-S13.DWG	JUN. 08, 2001 6:13:56 PM		1:1 (1:2)		PLOT

XREFS: X99680,

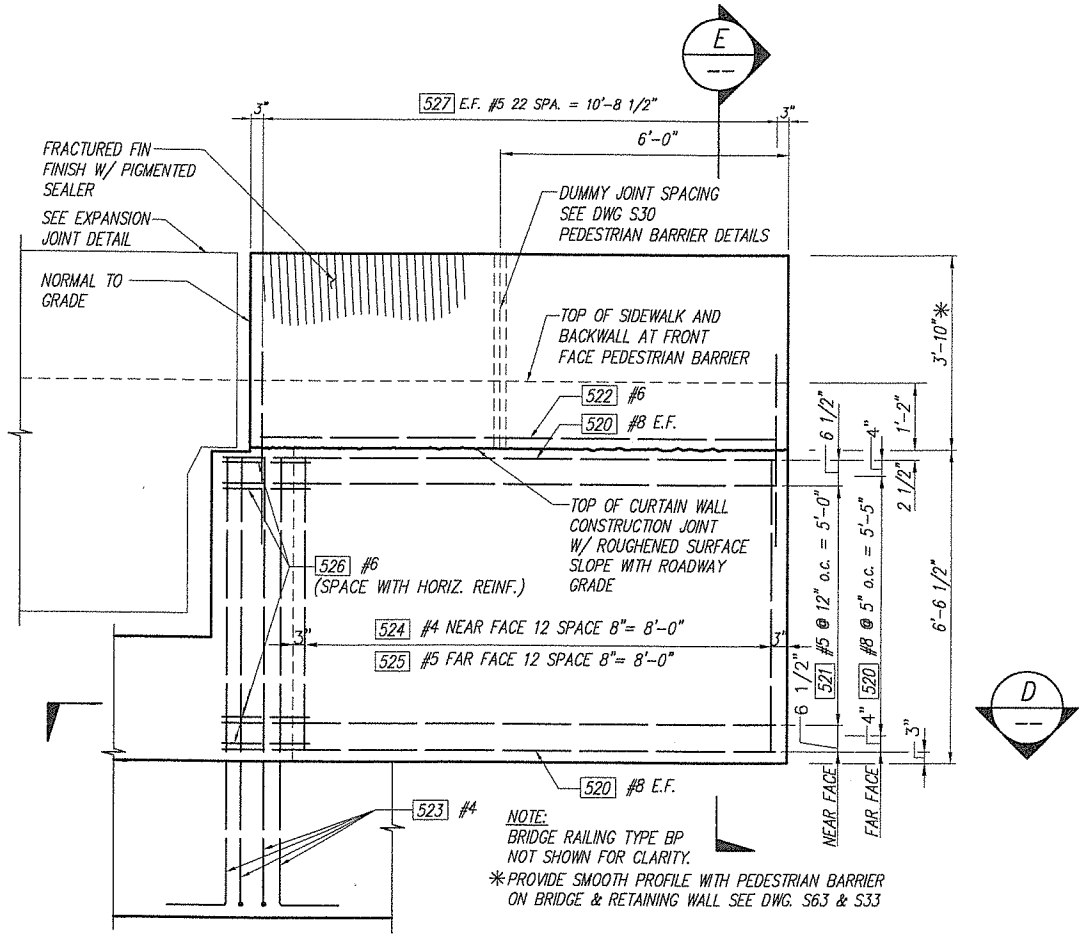

WING WALL NEAR FACE ELEVATION (C / S30)

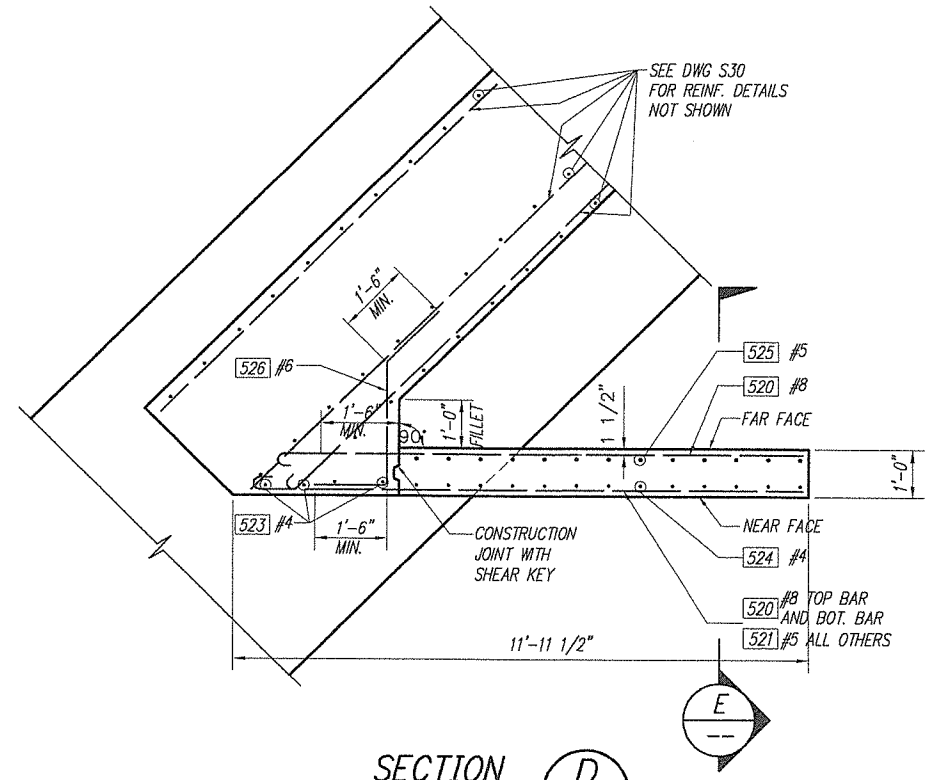

SECTION (D)

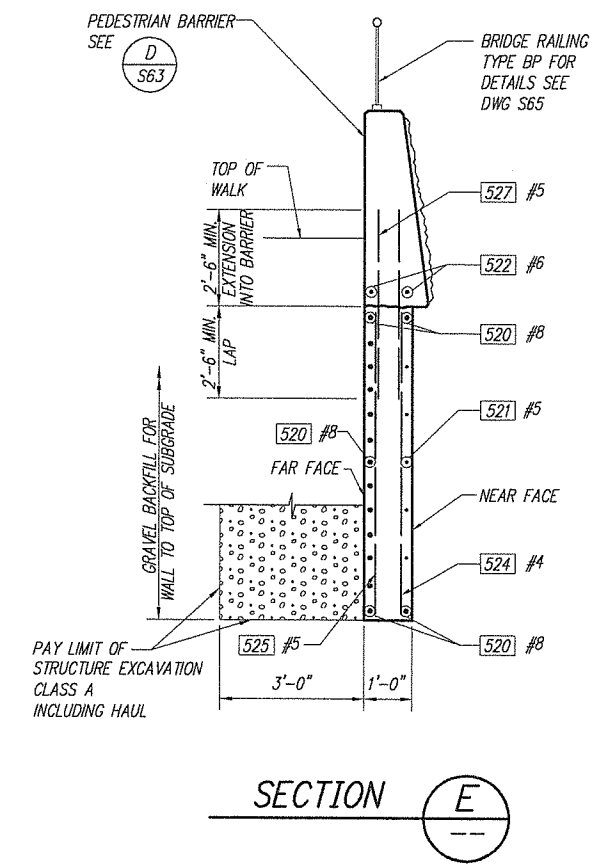

SECTION (E)

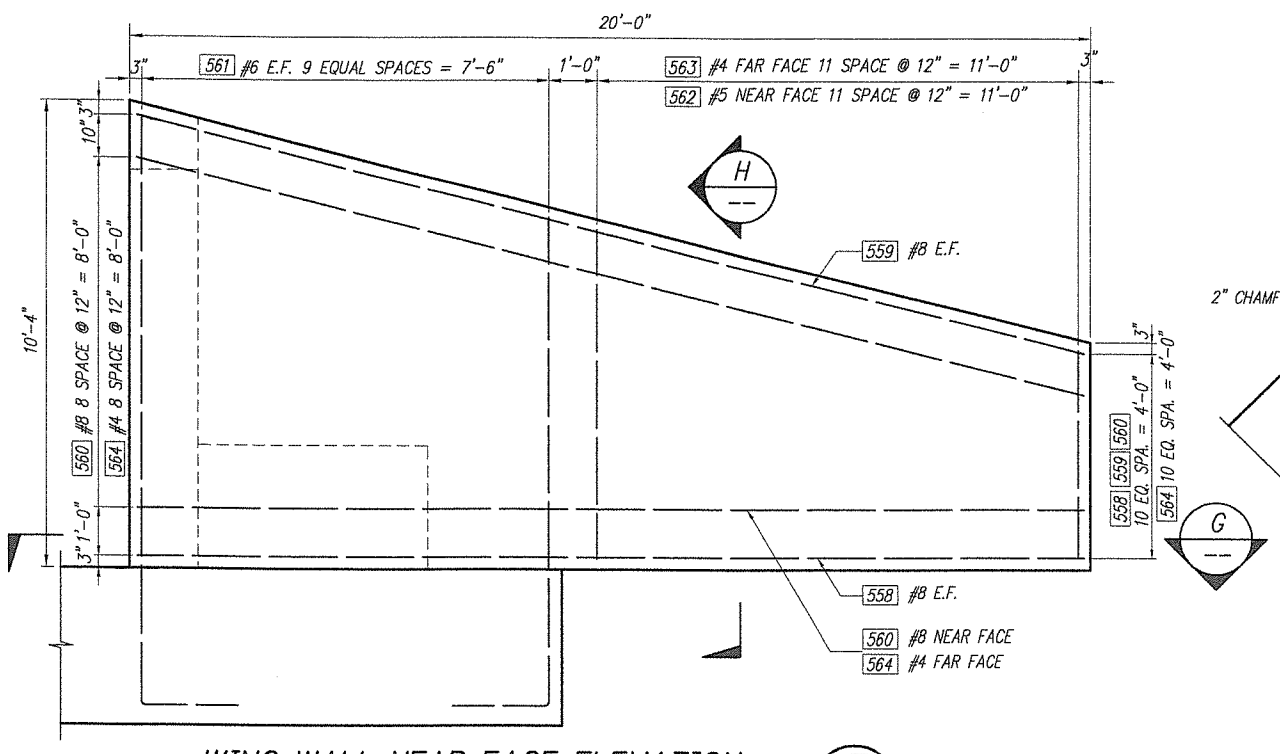

WING WALL NEAR FACE ELEVATION (F / S30)

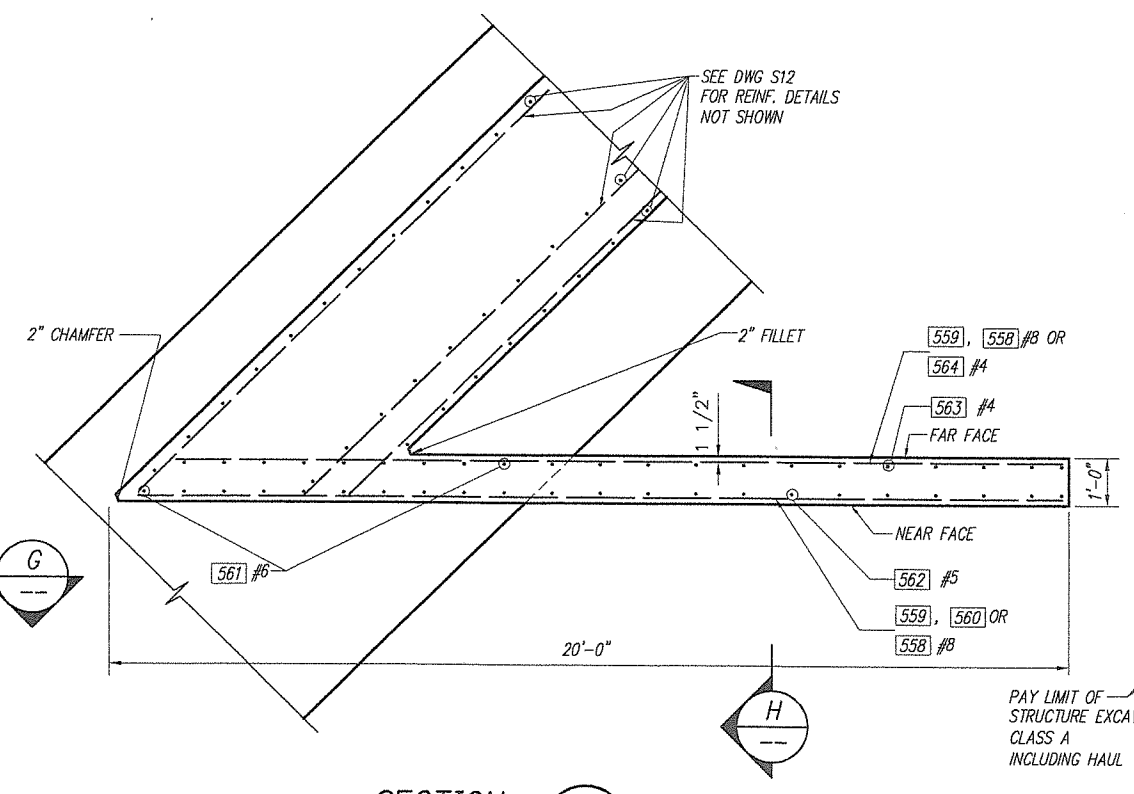

SECTION (G)

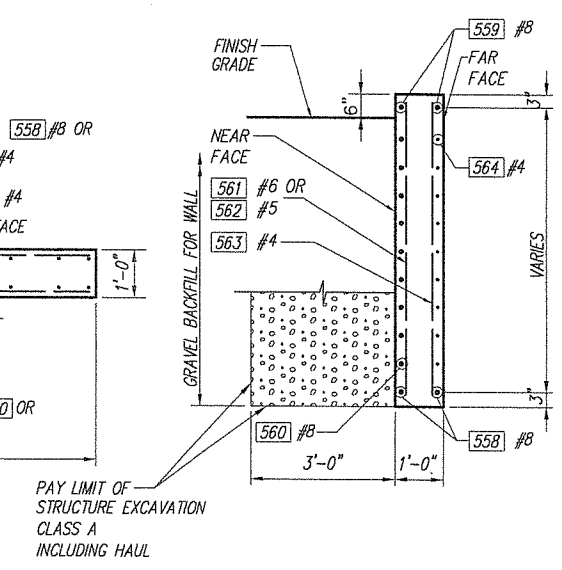

SECTION (H)

Fed. Aid No.
STPF-4253(010)

DESIGNED C. TOTTEN
DRAWN J. WILKES
CRP 399202
HOR. N/A
VERT. N/A
DATE FEB. 20, 2004
DWG: S32
SHEET 34 OF 78

CALL 48 HOURS BEFORE YOU DIG 1-800-553-4344 "It's the Law" CLARK COUNTY UTILITIES COORDINATING COUNCIL

DESIGN & ENGINEERING DIVISION

NE 20TH AVE/HGWY 99 REALIG.
CLARK COUNTY
PIER 5
SECTIONS AND DETAILS II

STATE OF WASHINGTON — JOHN H. HALAYKO — STATE OF WASHINGTON — REGISTERED PROFESSIONAL ENGINEER — 19104 — 02/19/2004

otak Incorporated — 105 N. Evergreen Blvd., Suite 500, Vancouver, WA 98660-3123, Phone: (360) 737-4483, FAX: (360) 737-4651

kpff Consulting Engineers — 111 SW 5th Avenue, Suite 2500, Portland, Oregon 97204, 503-227-3251

proud past, promising future

CLARK COUNTY WASHINGTON

PLOTTED DATE & TIME	UPDATED BY	PLOT SCALE	"PCP" FILE	PLOT VIEW
		TO FIT		PLOT

JOB #	JOB NAME	FILE PATH & NAME
99680	N.E. HIGHWAY 99	D:\2-PROJECTS\99680\99680-S32.DWG

XREFS: X99680,

Fed. Aid No.
STPF-4253(010)

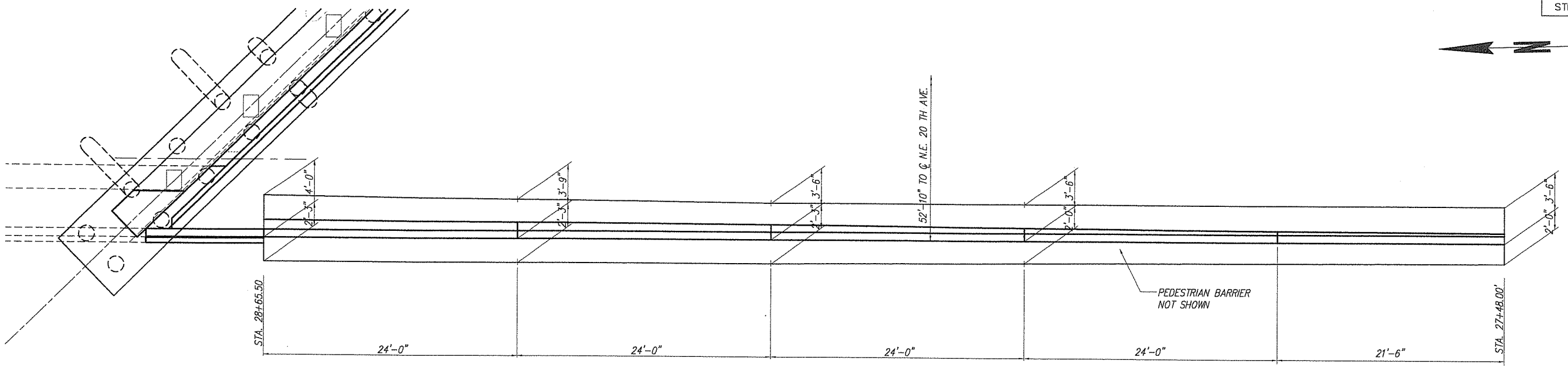

PLAN – RETAINING WALL 1

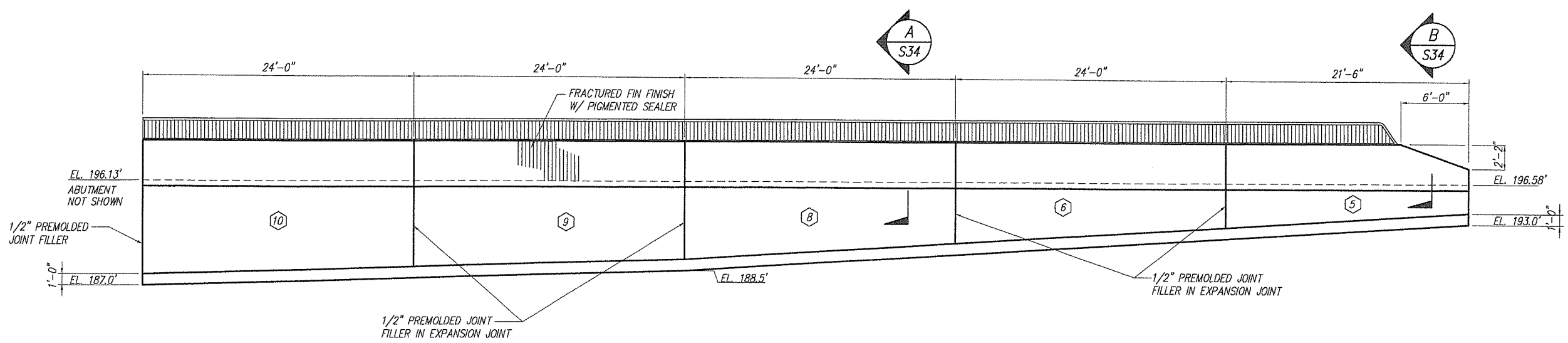

ELEVATION

LOOKING EAST

NOTES:

1. SEE STANDARD PLAN D-1 FOR TYPE 1 RETAINING WALL
2. SEE STANDARD PLAN D-4 FOR DRAINAGE AND BACKFILL
3. (X) INDICATES DESIGN WALL HEIGHT "H" FOR SELECTING REINFORCEMENT

DESIGNED C. TOTTEN
DRAWN L. WILKES
CRP 392922
HOR. N/A
VERT. N/A
DATE FEB. 20, 2004
DWG: S33
SHEET 35 OF 78

CALL 48 HOURS BEFORE YOU DIG 1-800-553-4344 "It's the Law" CLARK COUNTY UTILITIES COORDINATING COUNCIL

DESIGN & ENGINEERING DIVISION

NE 20TH AVE/HGWY 99 REALIG.
CLARK COUNTY
RETAINING WALL 1
PLAN, ELEVATION AND DETAILS

STATE OF WASHINGTON 26958 REGISTERED PROFESSIONAL ENGINEER
2/16/04
EXPIRES 12/31/2005

Clark Incorporated
105 W. Evergreen Blvd., Suite 500
Vancouver, WA 98660-3123
Phone: (360) 737-8611
FAX: (360) 737-9651

Kpff Consulting Engineers
111 SW 5th Avenue
Suite 2300
Portland, Oregon 97204
503-227-3251

proud past, promising future

CLARK COUNTY
WASHINGTON

PLOTTED DATE & TIME	UPDATED BY	PLOT SCALE	'PCP' FILE	PLOT VIEW
-	---	1=1	---	

FILE PATH & NAME: D:\2-PROJECTS\99680\99680-S33.DWG

JOB #	JOB NAME
99680	N.E. HIGHWAY 99

XREFS: XMSP1A, XSURV, XBRIDGE, X99680

Fed. Aid No.
STPF-4253(010)

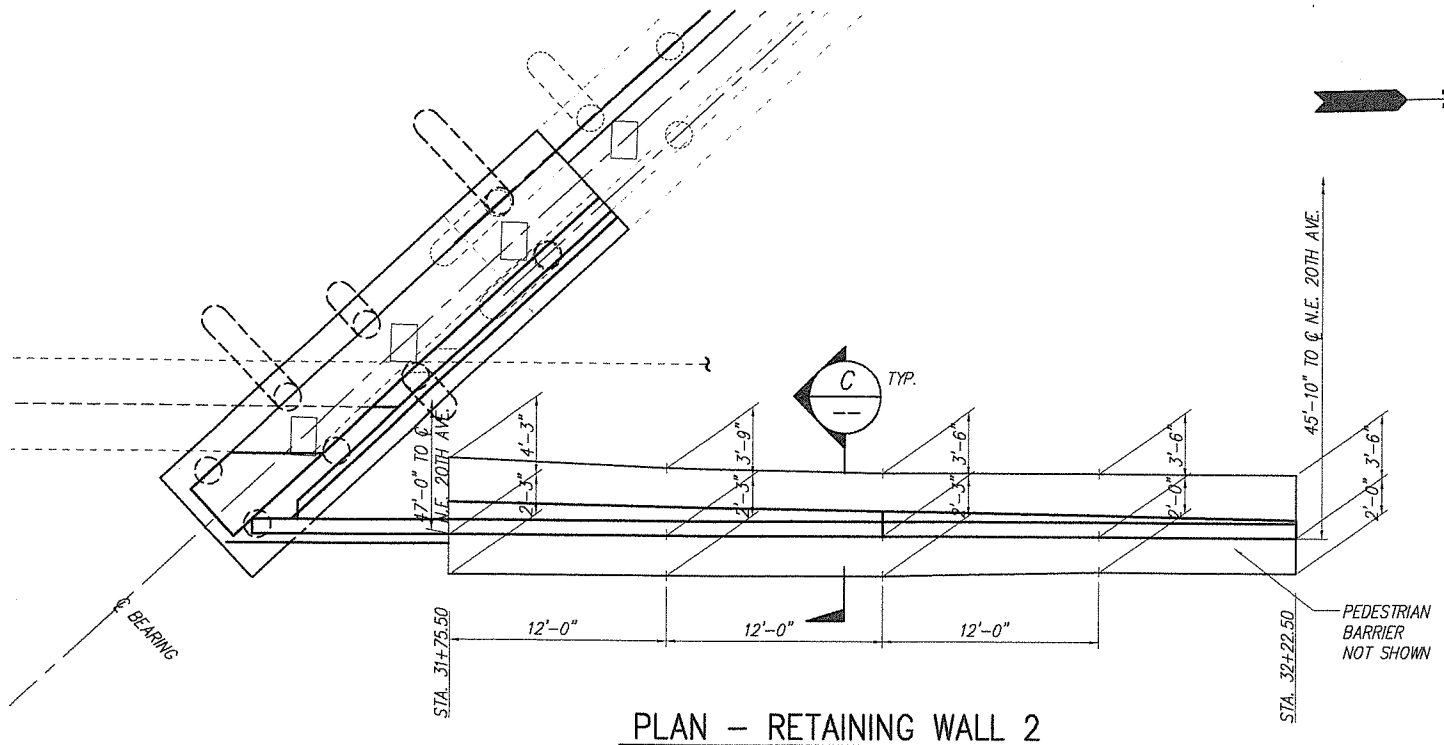

PLAN – RETAINING WALL 2

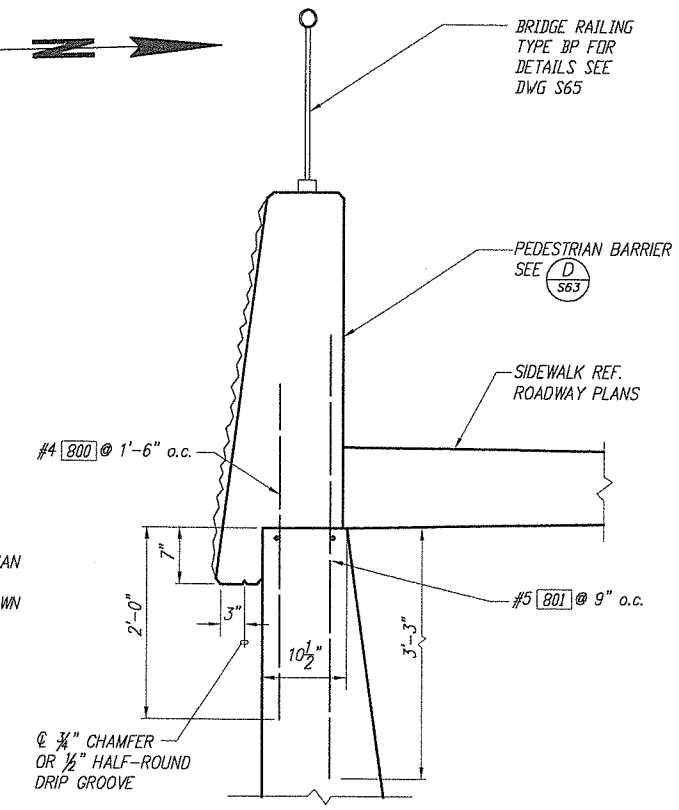

SECTION A S33

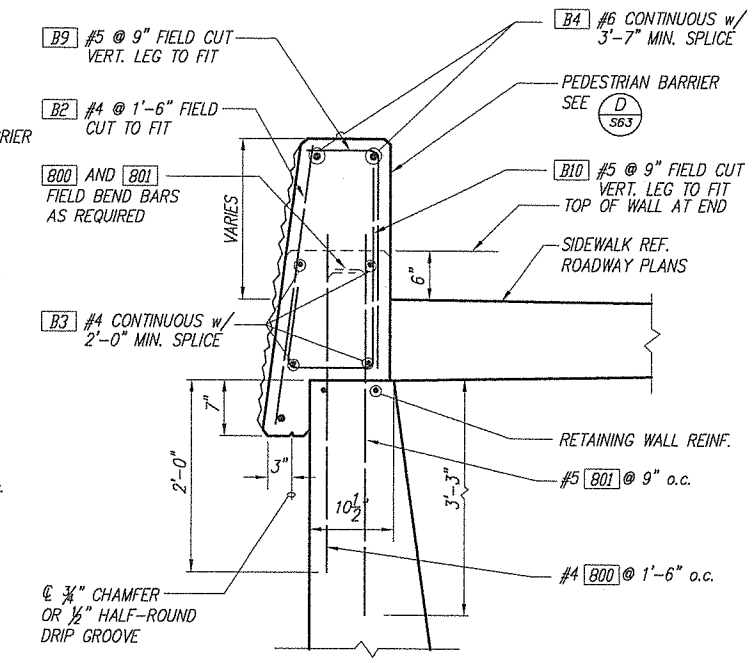

SECTION B S33

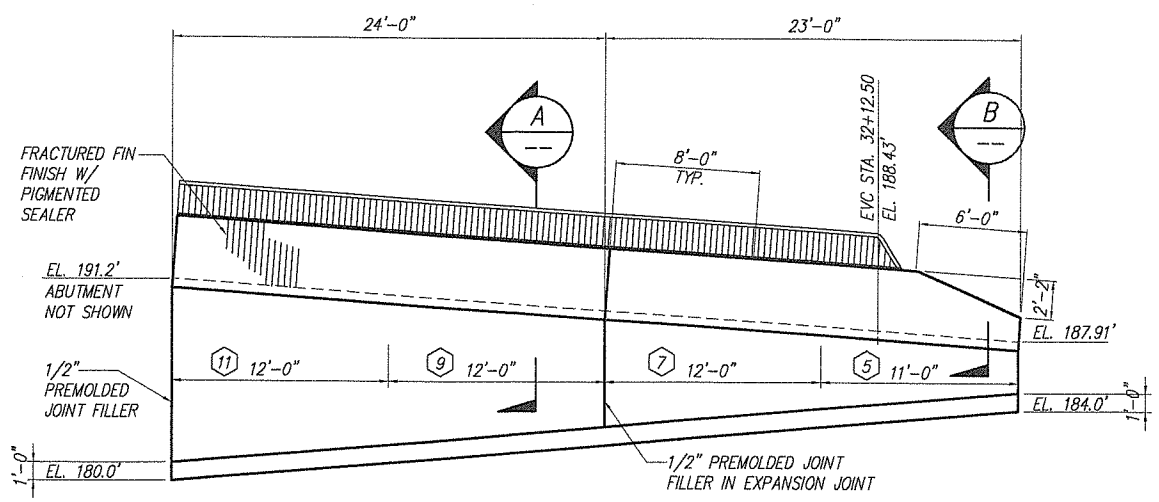

ELEVATION

LOOKING WEST

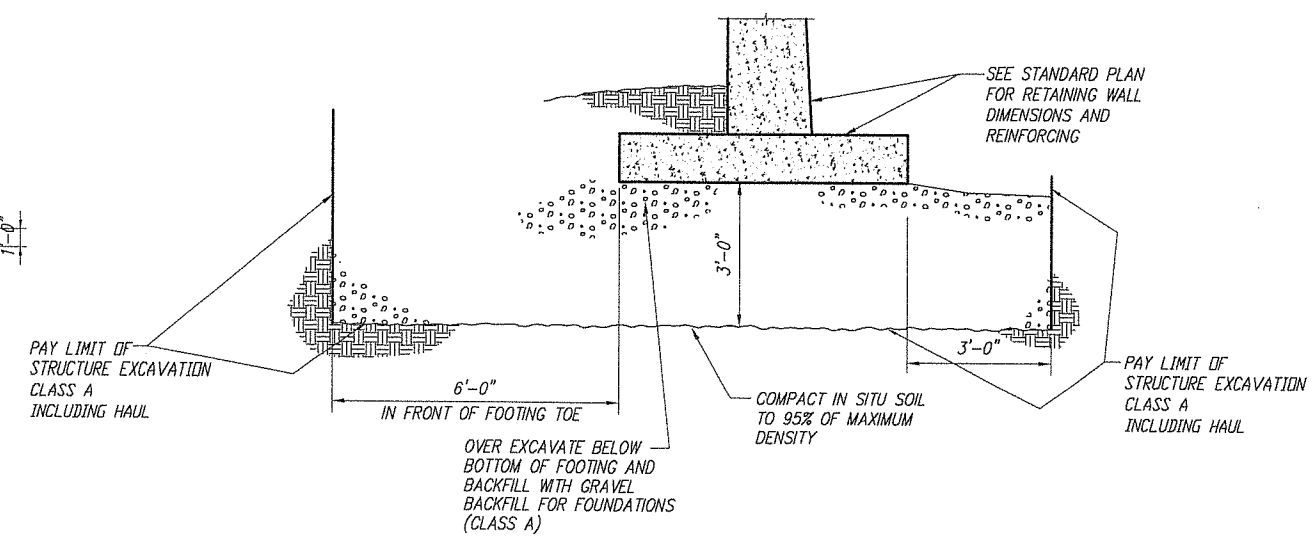

SECTION C --

NOTES:

1. SEE STANDARD PLAN D-1 FOR TYPE 1 RETAINING WALL
2. SEE STANDARD PLAN D-4 FOR DRAINAGE AND BACKFILL
3. (X) INDICATES DESIGN WALL HEIGHT "H" FOR SELECTING REINFORCEMENT

DESIGNED C. TOTTEN
DRAWN J. WILKES
CRP 382932
HOR. N/A
VERT. N/A
DATE FEB. 20, 2004
DWG: S34
SHEET 38 OF 78

CALL 48 HOURS BEFORE YOU DIG 1-800-553-4344 "It's the Law" CLARK COUNTY UTILITIES COORDINATING COUNCIL

DESIGN & ENGINEERING DIVISION

NE 20TH AVE/HGWY 99 REALIG.
CLARK COUNTY
RETAINING WALL 2
PLAN, ELEVATION AND DETAILS

STATE OF WASHINGTON GARY R. HASLAM 22600 REGISTERED PROFESSIONAL ENGINEER
EXPIRES 2/9/2006

otak Incorporated
105 W. Evergreen Blvd., Suite 300
Vancouver, WA 98660-3123
Phone: (360) 737-8513
FAX: (360) 737-9801

kpff Consulting Engineers
111 SW 5th Avenue
Suite 2500
Portland, Oregon 97204
503-227-3251

proud past, promising future
CLARK COUNTY WASHINGTON

PLOTTED DATE & TIME	UPDATED BY	PLOT SCALE	'POP' FILE	PLOT VIEW
-	---	1=1	---	

FILE PATH & NAME: D:\2-PROJECTS\99680\99680-S34.DWG

JOB #	JOB NAME
99680	N.E. HIGHWAY 99

XREFS: XMSP1A, XSURV, XBRIDGE, X99680

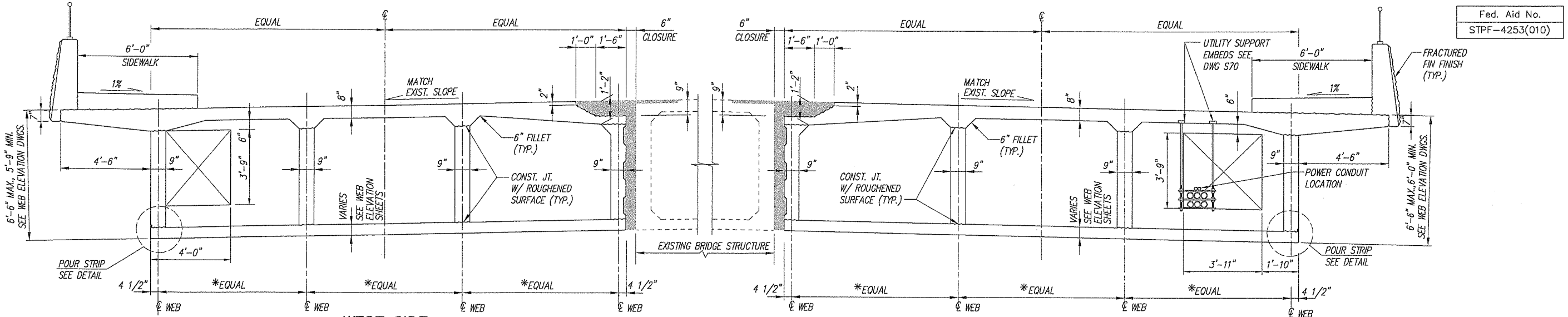

Fed. Aid No.
STPF-4253(010)

WEST SIDE

*WEB SPACING VARIES FROM 7'-7 7/8" (MAX @ SOUTH END) TO 3'-11 7/8" (MIN. @ NORTH END), SEE FRAMING PLAN

TYPICAL SECTION AT MID-SPAN

EAST SIDE

*WEB SPACING VARIES FROM 8'-3 7/8" (MAX @ SOUTH END) TO 5'-10 1/8" (MIN. @ NORTH END), SEE FRAMING PLAN

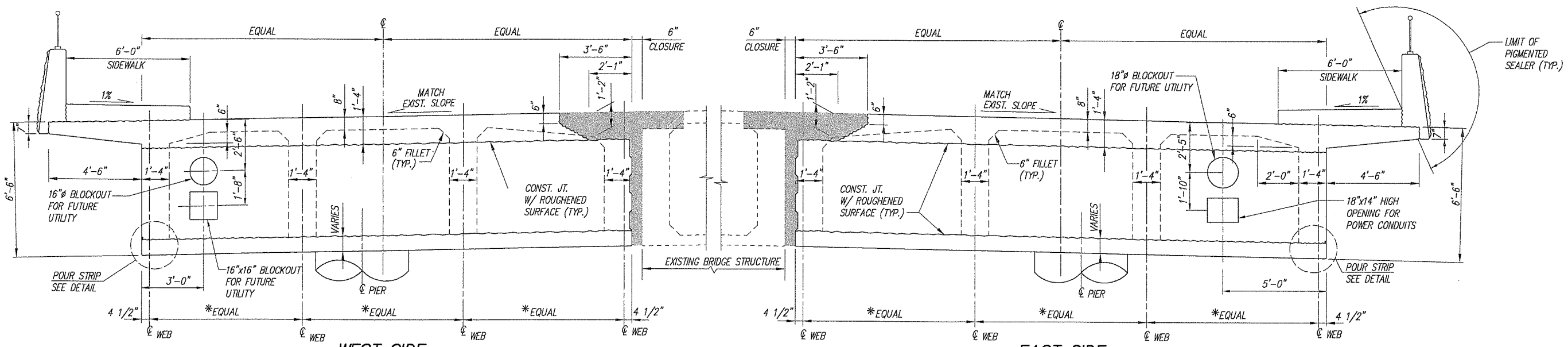

WEST SIDE

*WEB SPACING VARIES FROM 7'-7 7/8" (MAX @ SOUTH END) TO 3'-11 7/8" (MIN. @ NORTH END), SEE FRAMING PLAN

TYPICAL SECTION AT PIER

EAST SIDE

*WEB SPACING VARIES FROM 8'-3 7/8" (MAX @ SOUTH END) TO 5'-10 1/8" (MIN. @ NORTH END), SEE FRAMING PLAN

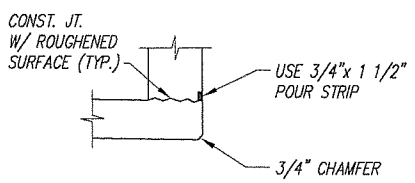

POUR STRIP DETAIL

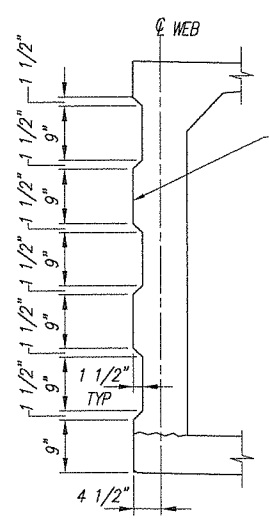

STAY IN PLACE FORM. * PLACE WITH RIBS HORIZONTAL.

NOTE:
* STAY IN PLACE FORMS SHALL BE SOLID GALVANIZED SHEET METAL. FORMS MUST BE VERTICALLY BRACED AS NECESSARY TO PREVENT BOWING DURING CONCRETE PLACEMENT. NON-METALLIC BRACING MUST BE REMOVED. IF STEEL WALES OR TIES ARE USED, THEY MAY BE LEFT IN PLACE THE CONTRACTOR SHALL SUBMIT DESIGN CALCULATIONS IN ACCORDANCE WITH STANDARD SPECIFICATIONS 6-02.3(16) AND 6-02.3(17)

SHEAR KEY DETAIL

NOTES:

1. SECTIONS ARE PROJECTIONS PERPENDICULAR TO BRIDGE ℄.
2. FOR PEDESTRIAN BARRIER AND SIDEWALK DIMENSIONS AND DETAILS, SEE DWG S63
3. WEBS CONSTRUCTED VERTICAL.
4. CROSS SLOPE TO MATCH EXISTING, SHOWN AS 2%.
5. SUPERSTRUCTURE DEPTH TO MATCH EXISTING, SHOWN AS 6'-6". EXCEPT AS SHOWN AT SPAN 2 & 3.
6. FOR BOTTOM SLAB THICKNESS, SEE WEB ELEVATION SHEETS.

DESIGNED C. TOTTEN
DRAWN J. WILKES
CRP 392622
HOR. N/A
VERT. N/A
DATE FEB. 20, 2004
DWG: S35
SHEET 37 OF 78

CALL 48 HOURS BEFORE YOU DIG 1-800-553-4344 "It's the Law" CLARK COUNTY UTILITIES COORDINATING COUNCIL

DESIGN & ENGINEERING DIVISION

NE 20TH AVE/HGWY 99 REALIG.
CLARK COUNTY
DECK SECTION
TYPICAL CONCRETE OUTLINE

STATE OF WASHINGTON 20805 REGISTERED PROFESSIONAL ENGINEER
EXPIRES 12/9/2005

otak Incorporated
165 N. Evergreen Blvd., Suite 300
Vancouver, WA 98660-3123
Phone: (360) 737-4813
FAX: (360) 737-9551

kpff Consulting Engineers
111 SW 5th Avenue
Suite 2500
Portland, Oregon 97204
503-227-3251

proud past, promising future
CLARK COUNTY WASHINGTON

PLOTTED DATE & TIME	UPDATED BY	PLOT SCALE	'PCP' FILE	PLOT VIEW
AUG. 04, 2001 2:13:20 PM	DIEMT	1:1 (1:2)		PLOT

FILE PATH & NAME: BRIDGE H-P\N.E. HIGHWAY 99 (99406)\INCOMING\08-03-01\99680-S35.DWG

JOB #	JOB NAME
99680	N.E. 20 th AVE HIGHWAY 99 V

XREFS: X99680,

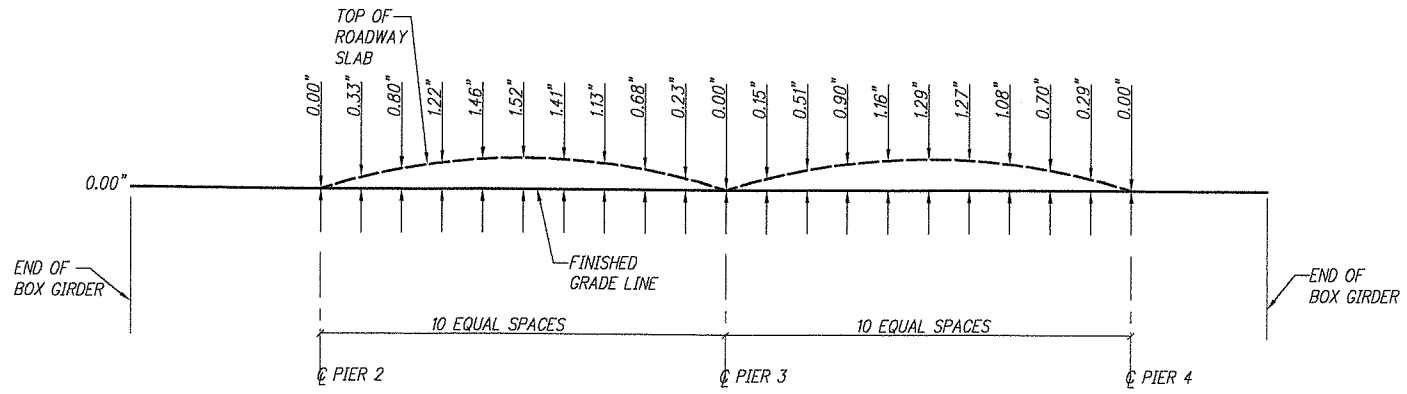

EAST LONGITUDINAL DEAD LOAD CAMBER DIAGRAM AT EAST WEB NO. 1

NOT TO SCALE

THIS CURVE SHOWS THE DEAD LOAD CAMBER ONLY AND SHOULD BE INCREASED BY THE AMOUNT OF TAKE UP ANTICIPATED IN THE FALSE WORK.

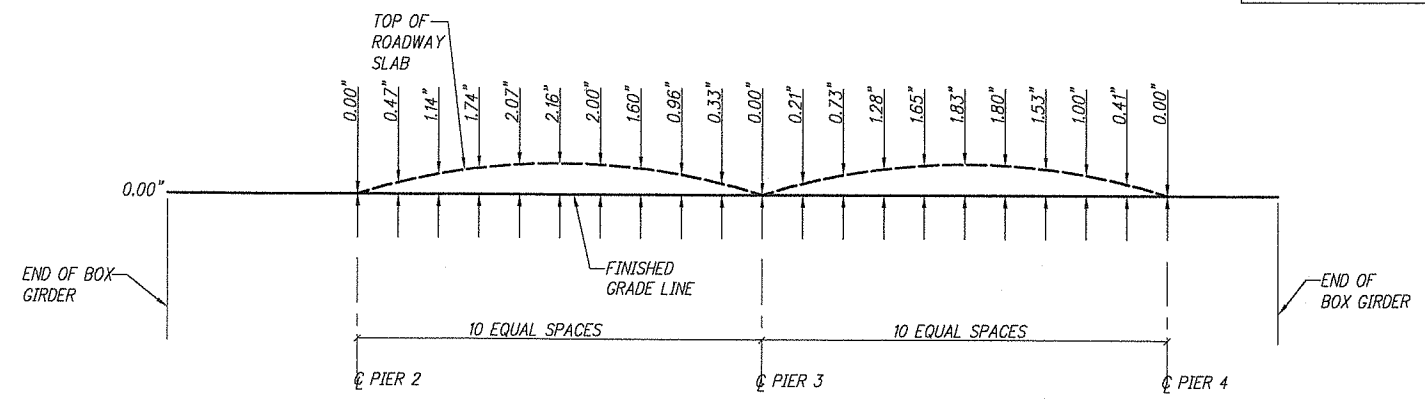

EAST LONGITUDINAL DEAD LOAD CAMBER DIAGRAM AT EAST WEB NO.4

NOT TO SCALE

THIS CURVE SHOWS THE DEAD LOAD CAMBER ONLY AND SHOULD BE INCREASED BY THE AMOUNT OF TAKE UP ANTICIPATED IN THE FALSE WORK.

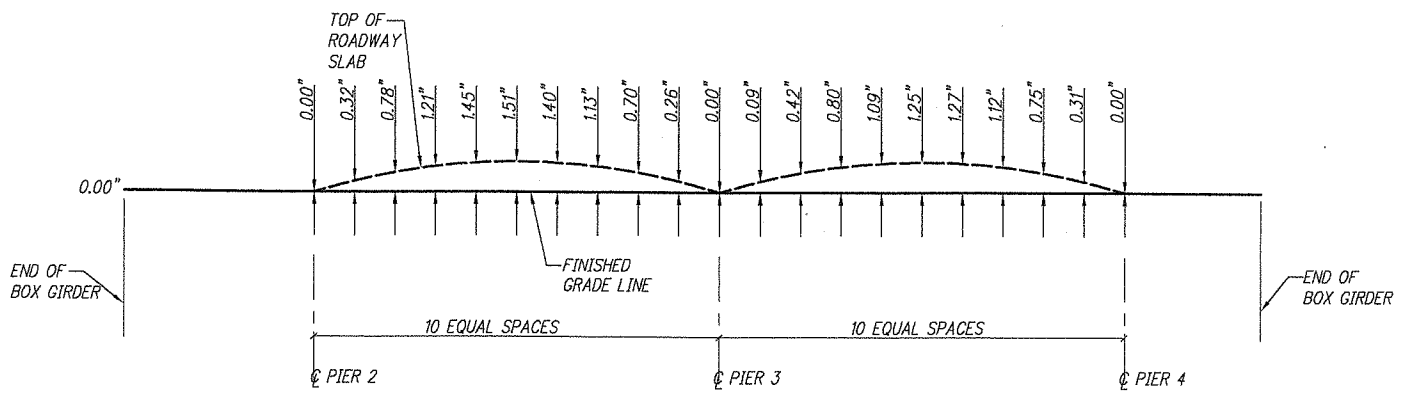

WEST LONGITUDINAL DEAD LOAD CAMBER DIAGRAM AT WEST WEB NO. 1

NOT TO SCALE

THIS CURVE SHOWS THE DEAD LOAD CAMBER ONLY AND SHOULD BE INCREASED BY THE AMOUNT OF TAKE UP ANTICIPATED IN THE FALSE WORK.

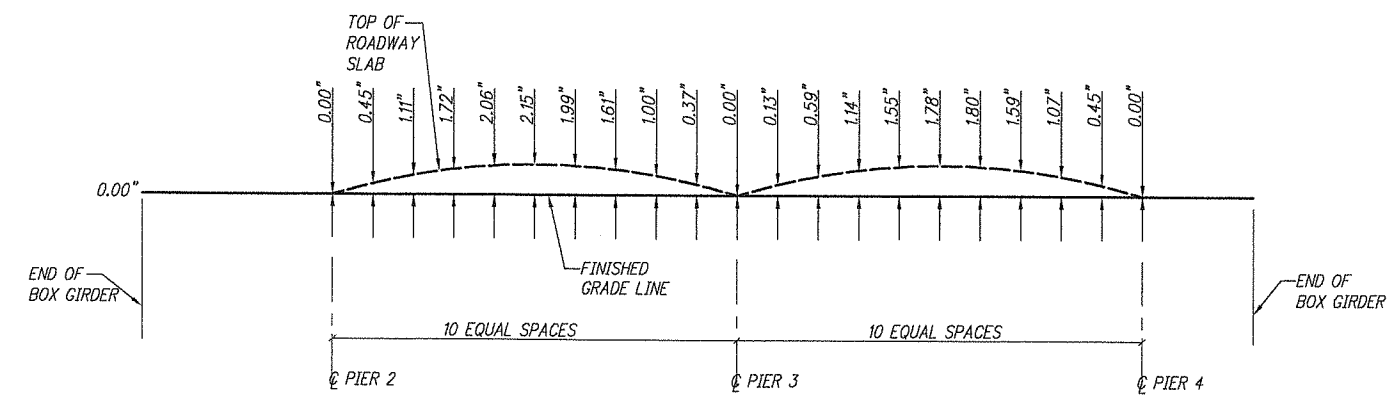

WEST LONGITUDINAL DEAD LOAD CAMBER DIAGRAM AT WEST WEB NO.4

NOT TO SCALE

THIS CURVE SHOWS THE DEAD LOAD CAMBER ONLY AND SHOULD BE INCREASED BY THE AMOUNT OF TAKE UP ANTICIPATED IN THE FALSE WORK.

NOTE:
USE LINEAR INTERPOLATION TO DETERMINE CAMBER OF INTERMEDIATE WEBS.

Fed. Aid No.
STPF-4253(010)

DESIGNED C. TOTTEN
DRAWN J. WAKES
CRP. 39922
HOR. N/A
VERT. N/A
DATE FEB. 20, 2004
DWG: S36
SHEET 38 OF 78

CALL 48 HOURS BEFORE YOU DIG 1-800-553-4344 "It's the Law" CLARK COUNTY UTILITIES COORDINATING COUNCIL

DESIGN & ENGINEERING DIVISION

NE 20TH AVE/HGWY 99 REALIG.
CLARK COUNTY
BRIDGE CAMBER DIAGRAMS

STATE OF WASHINGTON 20255 REGISTERED PROFESSIONAL ENGINEER
2/19/04
EXPIRES 2/19/2005

otak Incorporated
105 E. Evergreen Blvd., Suite 300
Vancouver, WA 98660-3128
Phone: (360) 737-8513
FAX: (360) 737-9921

kpff Consulting Engineers
111 SW 5th Avenue
Suite 2500
Portland, Oregon 97204
503-227-3251

proud past, promising future
CLARK COUNTY
WASHINGTON

JOB #	JOB NAME	FILE PATH & NAME	PLOTTED DATE & TIME	UPDATED BY	PLOT SCALE	'PCP' FILE	PLOT VIEW
99680	N.E. HIGHWAY 99	D:\2-PROJECTS\99680\99680-S36.DWG			TO FIT		PLOT

XREFS: XMSP1, XSURV, NE99XRW, XBRIDGE, X99680,

Fed. Aid No.
STPF-4253(010)

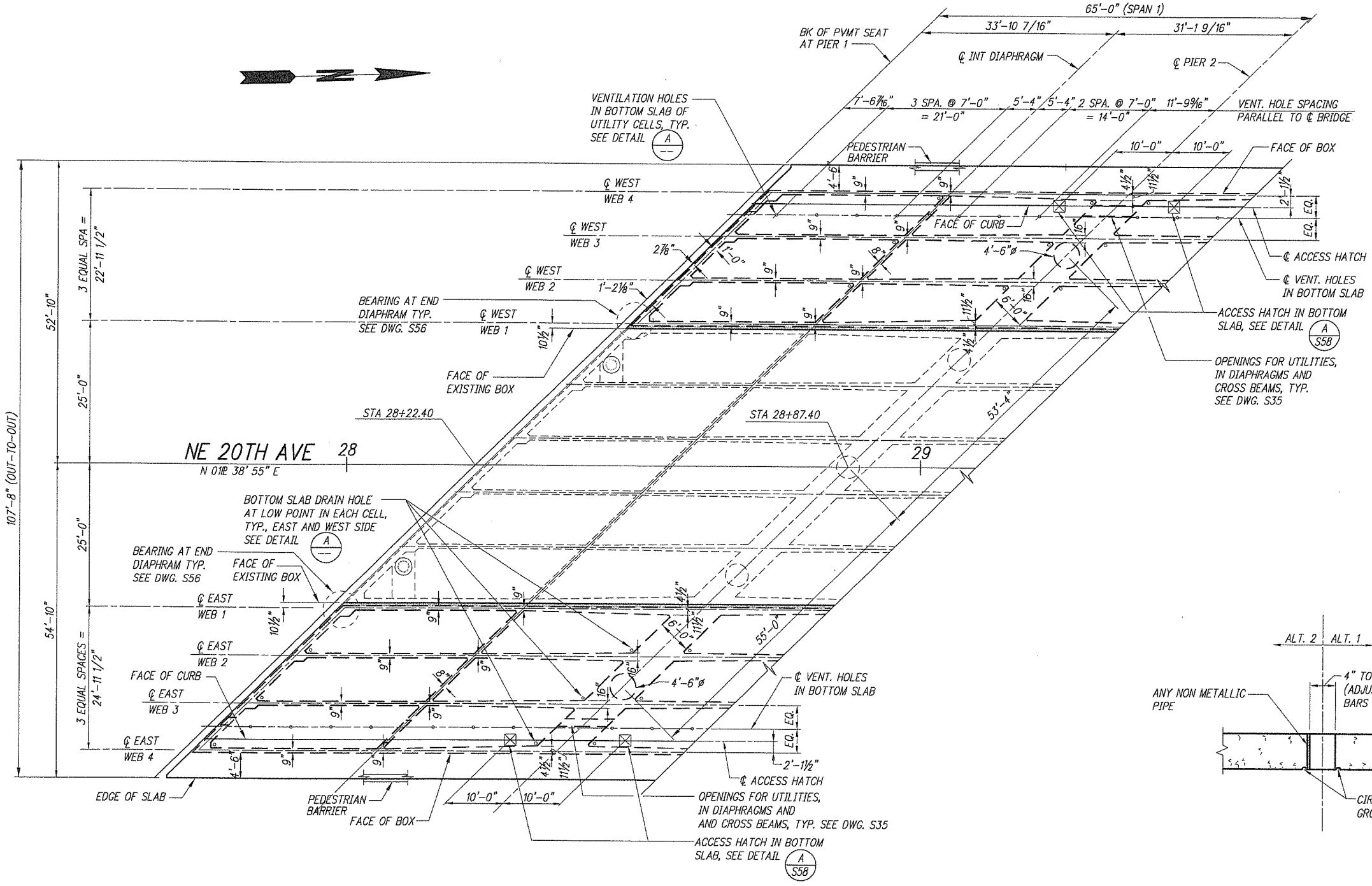

FRAMING PLAN – SPAN 1

NOTE:
1. CLOSURE

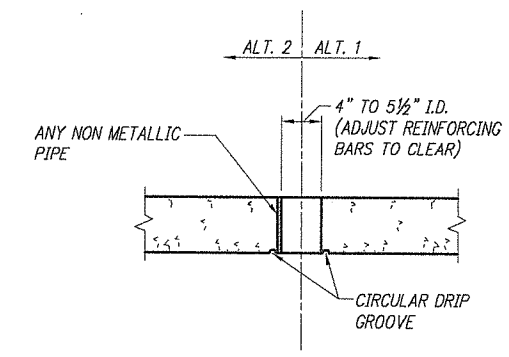

BOTTOM SLAB VENT HOLE DETAIL A

DESIGNED C. TOTTEN
DRAWN J. WILKES
CRP 392922
HOR. N/A
VERT. N/A
DATE FEB. 20, 2004
DWG: S37
SHEET 39 OF 78

CALL 48 HOURS BEFORE YOU DIG 1-800-553-4344 "It's the Law" CLARK COUNTY UTILITIES COORDINATING COUNCIL

DESIGN & ENGINEERING DIVISION

NE 20TH AVE/HGWY 99 REALIG.
CLARK COUNTY
BRIDGE SUPERSTRUCTURE
FRAMING PLAN SPAN 1

STATE OF WASHINGTON
JAMES D. HASLAM
22853
REGISTERED PROFESSIONAL ENGINEER
EXPIRES 2/9/2006

otak Incorporated
105 W. Evergreen Blvd., Suite 500
Vancouver, WA 98660-3123
Phone: (360) 737-4613
FAX: (360) 737-9681

kpff Consulting Engineers
111 SW 5th Avenue
Suite 2500
Portland, Oregon 97204
503-227-3251

proud past, promising future
CLARK COUNTY WASHINGTON

PLOTTED DATE & TIME	UPDATED BY	PLOT SCALE	'PCP' FILE	PLOT VIEW
-	---	1=1	---	

FILE PATH & NAME: D:\2-PROJECTS\99680\99680-S37.DWG

JOB #	JOB NAME
99680	N.E. HIGHWAY 99

XREFS: X99680, NE99XMSP1A, NE99XRW, NE99XBRIDGE, NE99XSURV

Fed. Aid No.
STPF-4253(010)

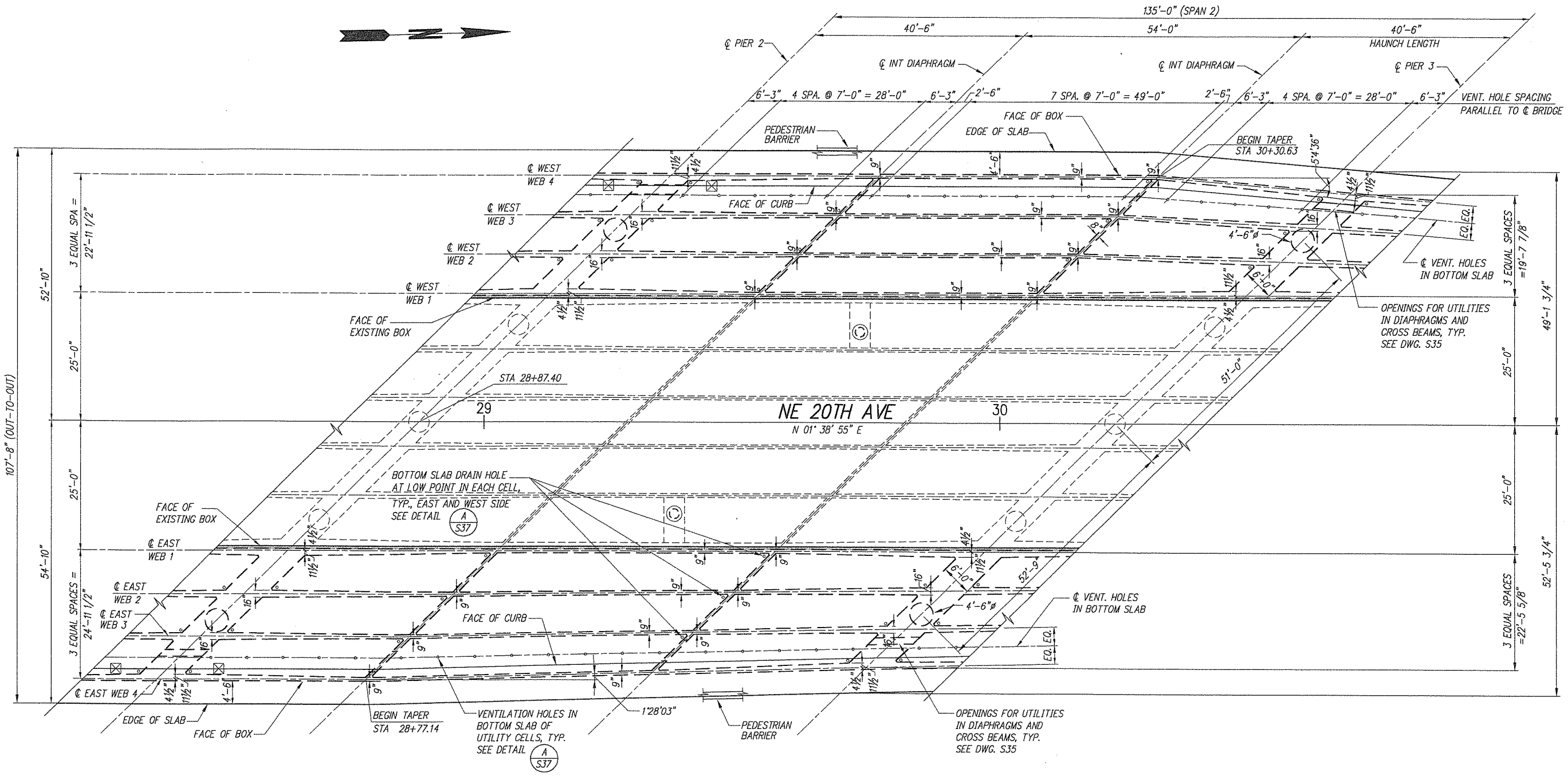

FRAMING PLAN – SPAN 2

NOTE:
1. CLOSURE

PLOTTED DATE & TIME	UPDATED BY	PLOT SCALE	"PGP" FILE	PLOT VIEW
-	---	1=1	---	

FILE PATH & NAME: D:\2-PROJECTS\99680\99680-S38.DWG

JOB #	JOB NAME
99680	N.E. HIGHWAY 99

XREFS: X99680, NE99XMSPTA, NE99XRW, NE99XBRIDGE, NE99XSURV

DESIGNED C. TOITEN
DRAWN J. WILKES
CRP 392922
HOR. N/A
VERT. N/A
DATE FEB. 20, 2004
DWG: S38
SHEET 40 OF 78

CALL 48 HOURS BEFORE YOU DIG 1-800-553-4344 "It's the Law" CLARK COUNTY UTILITIES COORDINATING COUNCIL

DESIGN & ENGINEERING DIVISION

NE 20TH AVE/HGWY 99 REALIG.
CLARK COUNTY
BRIDGE SUPERSTRUCTURE FRAMING PLAN SPAN 2

STATE OF WASHINGTON JAMES A. HASSEN 22805 REGISTERED PROFESSIONAL ENGINEER
EXPIRES 2/10/2006

otak Incorporated
105 W. Evergreen Blvd., Suite 300
Vancouver, WA 98660-3183
Phone: (360) 797-8613
FAX: (360) 797-8651

kpff Consulting Engineers
111 SW 5th Avenue
Suite 2500
Portland, Oregon 97204
503-227-3251

proud past, promising future

CLARK COUNTY WASHINGTON

Fed. Aid No.
STPF-4253(010)

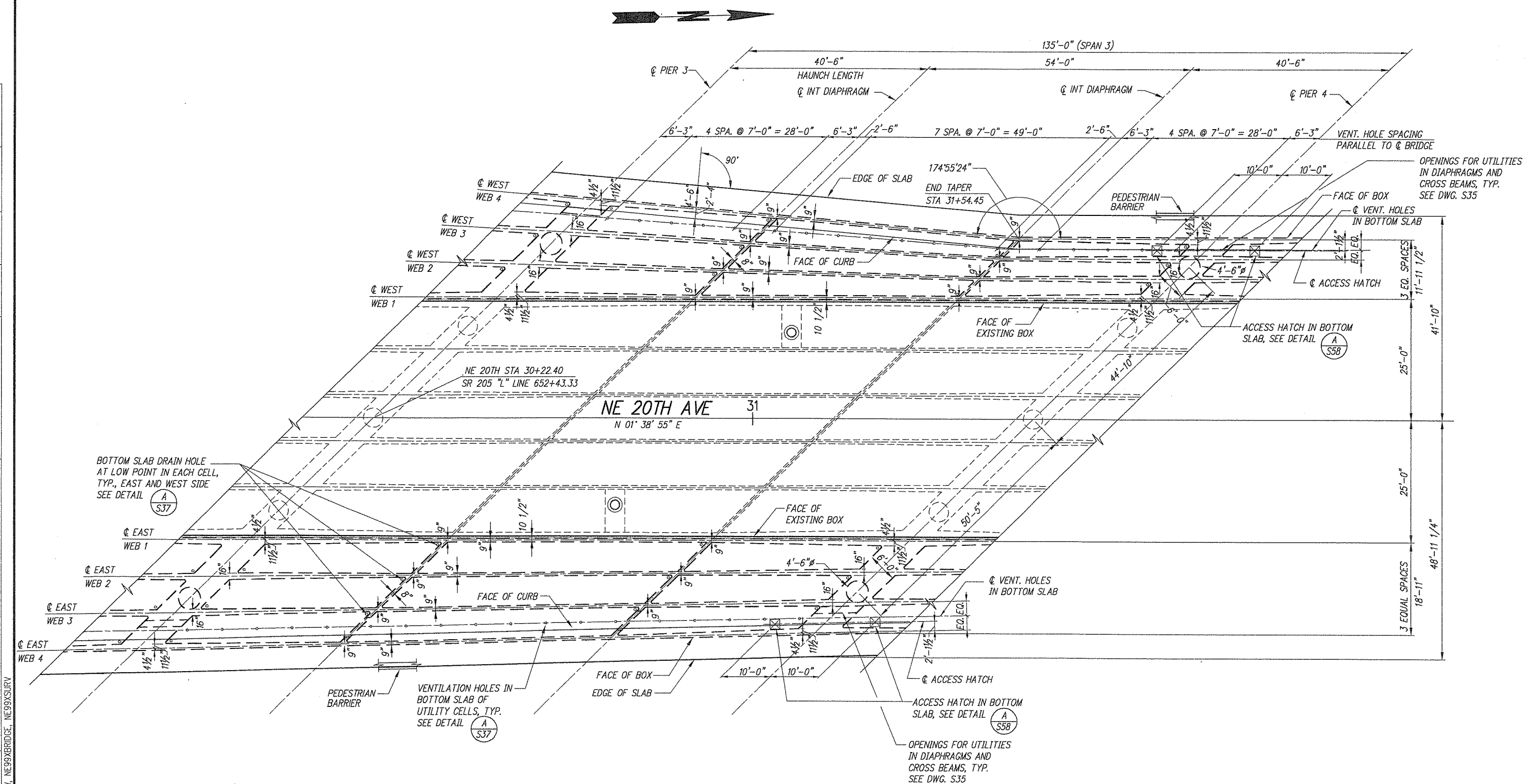

FRAMING PLAN – SPAN 3

NOTE:
1. ▒ CLOSURE

DESIGNED C. TOTTEN
DRAWN J. WILKES
CRP 302922
HOR. N/A
VERT. N/A
DATE FEB. 20, 2004
DWG: S39
SHEET 41 OF 78

CALL 48 HOURS BEFORE YOU DIG 1-800-553-4344 "It's the Law" CLARK COUNTY UTILITIES COORDINATING COUNCIL

DESIGN & ENGINEERING DIVISION
NE 20TH AVE/HGWY 99 REALIG.
CLARK COUNTY
BRIDGE SUPERSTRUCTURE
FRAMING PLAN SPAN 3

STATE OF WASHINGTON JAMES R. HAGAN 19800 REGISTERED PROFESSIONAL ENGINEER
EXPIRES 3/9/2005

oak Incorporated
105 W. Evergreen Blvd., Suite 500
Vancouver, WA 98660-3123
Phone: (360) 737-8183
FAX: (360) 737-9631

kpff Consulting Engineers
111 SW 5th Avenue
Suite 2500
Portland, Oregon 97204
503-227-3251

proud past, promising future
CLARK COUNTY WASHINGTON

PLOTTED DATE & TIME	UPDATED BY	PLOT SCALE	'PCP' FILE	PLOT VIEW
-	---	1=1	---	---

FILE PATH & NAME: D:\2-PROJECTS\99680\99680-S39.DWG

JOB #	JOB NAME
99680	N.E. HIGHWAY 99

XREFS: X99680, NE99XMSP1A, NE99XRW, NE99XBRIDGE, NE99XSURV

JOB #	JOB NAME	FILE PATH & NAME	PLOTTED DATE & TIME	UPDATED BY	PLOT SCALE	'POP' FILE	PLOT VIEW
99680	N.E. HIGHWAY 99	D:\2-PROJECTS\99680\99680-S40.DWG	-	---	1=1	---	

XREFS: X99680, NE99XNSP1A, NE99XRW, NE99XBRIDGE, NE99XSURV

FRAMING PLAN – SPAN 4

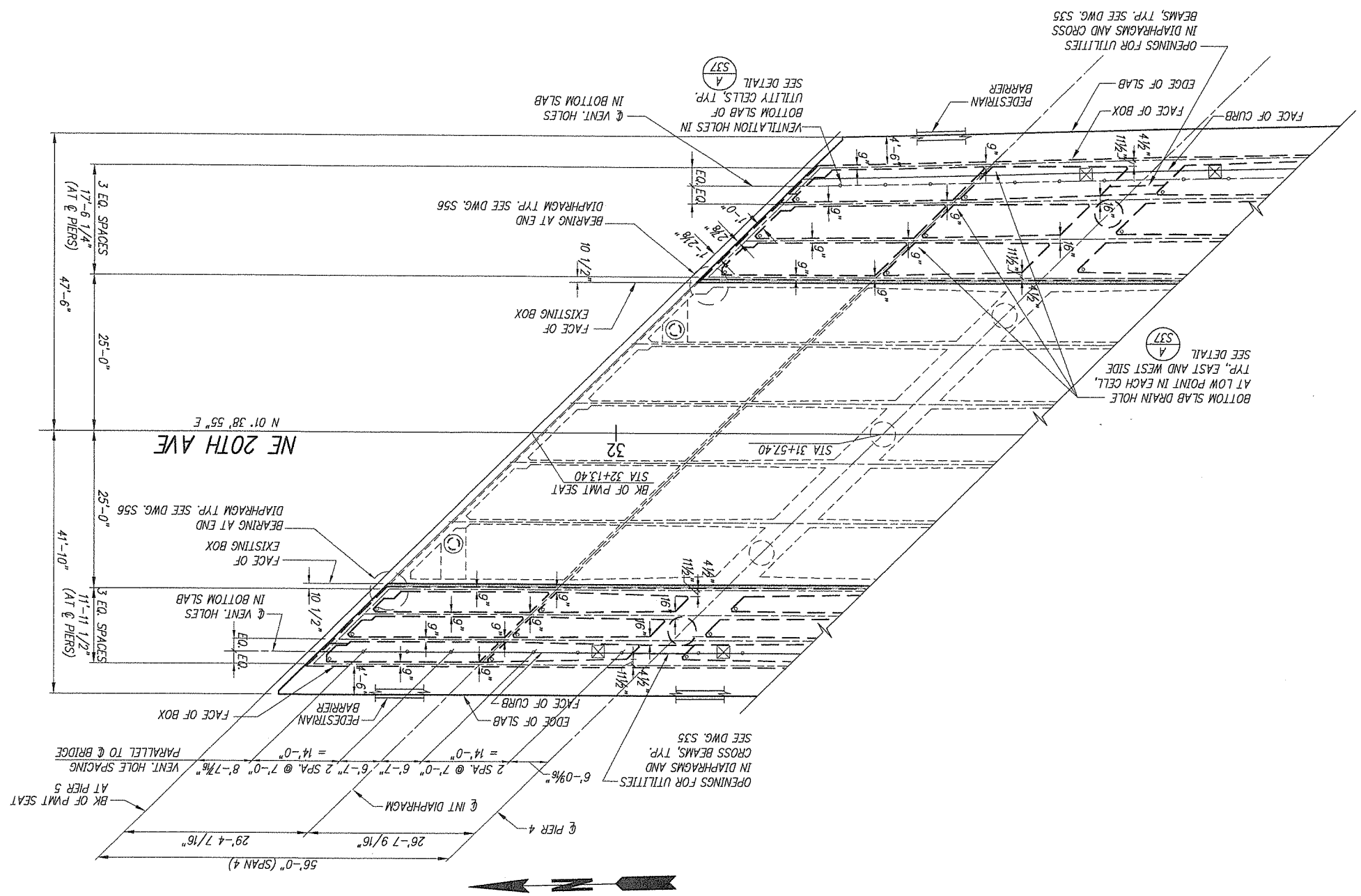

NOTE:
1. CLOSURE

DESIGN & ENGINEERING DIVISION

NE 20TH AVE/HGWY 99 REALIG.
CLARK COUNTY

BRIDGE SUPERSTRUCTURE
FRAMING PLAN SPAN 4

CLARK COUNTY WASHINGTON
proud past, promising future

oak Incorporated
109 W. Evergreen Blvd., Suite 300
Vancouver, WA 98660-3123
Phone: (360) 737-8183
FAX: (360) 737-8483

kpff Consulting Engineers
111 SW 5th Avenue
Suite 2500
Portland, Oregon 97204
503-227-3251

EXPIRES 2/9/2006

CALL 48 HOURS BEFORE YOU DIG
1-800-553-4344
"It's the Law"
CLARK COUNTY COORDINATED COUNCIL

DESIGNED	C. TOTTEN
DRAWN	J. WILKES
CRP	382922
HOR.	N/A
VERT.	N/A
DATE	FEB. 20, 2004
DWG:	S40
SHEET	42 OF 78

Fed. Aid No.
STPF-4253(010)

Fed. Aid No.
STPF-4253(010)

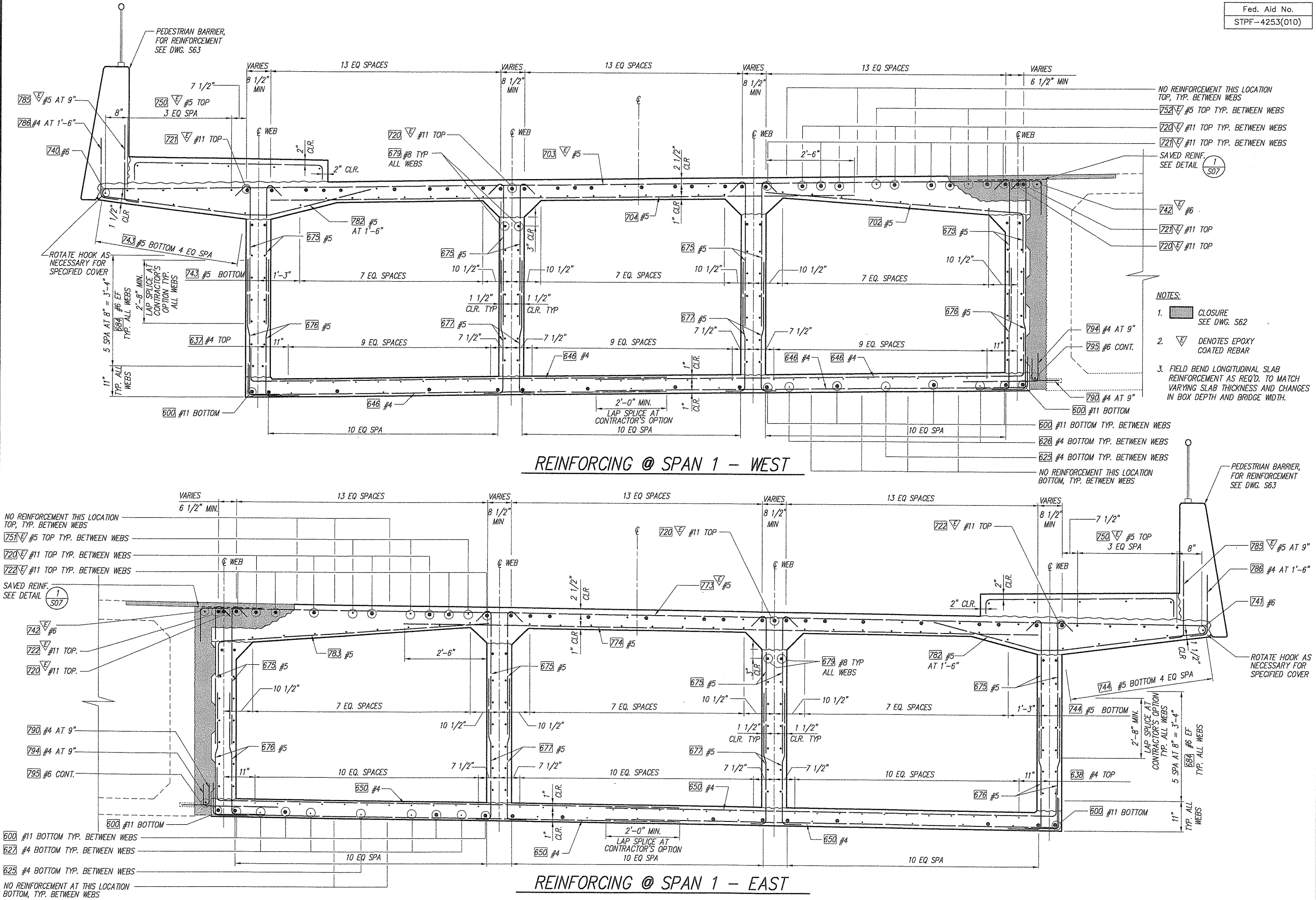

NOTES:

1. CLOSURE SEE DWG. S62
2. DENOTES EPOXY COATED REBAR
3. FIELD BEND LONGITUDINAL SLAB REINFORCEMENT AS REQ'D. TO MATCH VARYING SLAB THICKNESS AND CHANGES IN BOX DEPTH AND BRIDGE WIDTH.

REINFORCING @ SPAN 1 – WEST

REINFORCING @ SPAN 1 – EAST

DESIGNED C. TOTTEN
DRAWN J. WILKES
CRP 393922
HOR. N/A
VERT. N/A
DATE FEB. 20, 2004
DWG. S41
SHEET 43 OF 78

CALL 48 HOURS BEFORE YOU DIG 1-800-553-4344 "It's the Law" CLARK COUNTY UTILITIES COORDINATING COUNCIL

DESIGN & ENGINEERING DIVISION

NE 20TH AVE/HGWY 99 REALIG.
CLARK COUNTY
TYPICAL SECTION REINFORCING
SPAN 1

STATE OF WASHINGTON — STEVEN L. HOSAYN — 36580 — REGISTERED PROFESSIONAL ENGINEER
REVISED 2/10/2005

105 W. Evergreen Blvd., Suite 300
Vancouver, WA 98660-3123
Phone: (360) 737-4013
FAX: (360) 737-8651

otak Incorporated

111 SW 5th Avenue
Suite 2500
Portland, Oregon 97204
503-227-3251

kpff Consulting Engineers

proud past, promising future

CLARK COUNTY WASHINGTON

JOB #	JOB NAME	FILE PATH & NAME	PLOTTED DATE & TIME	UPDATED BY	PLOT SCALE	'PCP' FILE	PLOT VIEW
99680	N.E. 20 th AVE HIGHWAY 99	V:\BRIDGE H-P\N.E. HIGHWAY 99 (99406)\DESIGN\99680-S41.DWG	JUL. 13, 2001 3:18:54 PM	RICK1	1:1 (1:2)		PLOT

XREFS: X99680,

Fed. Aid No.
STPF-4253(010)

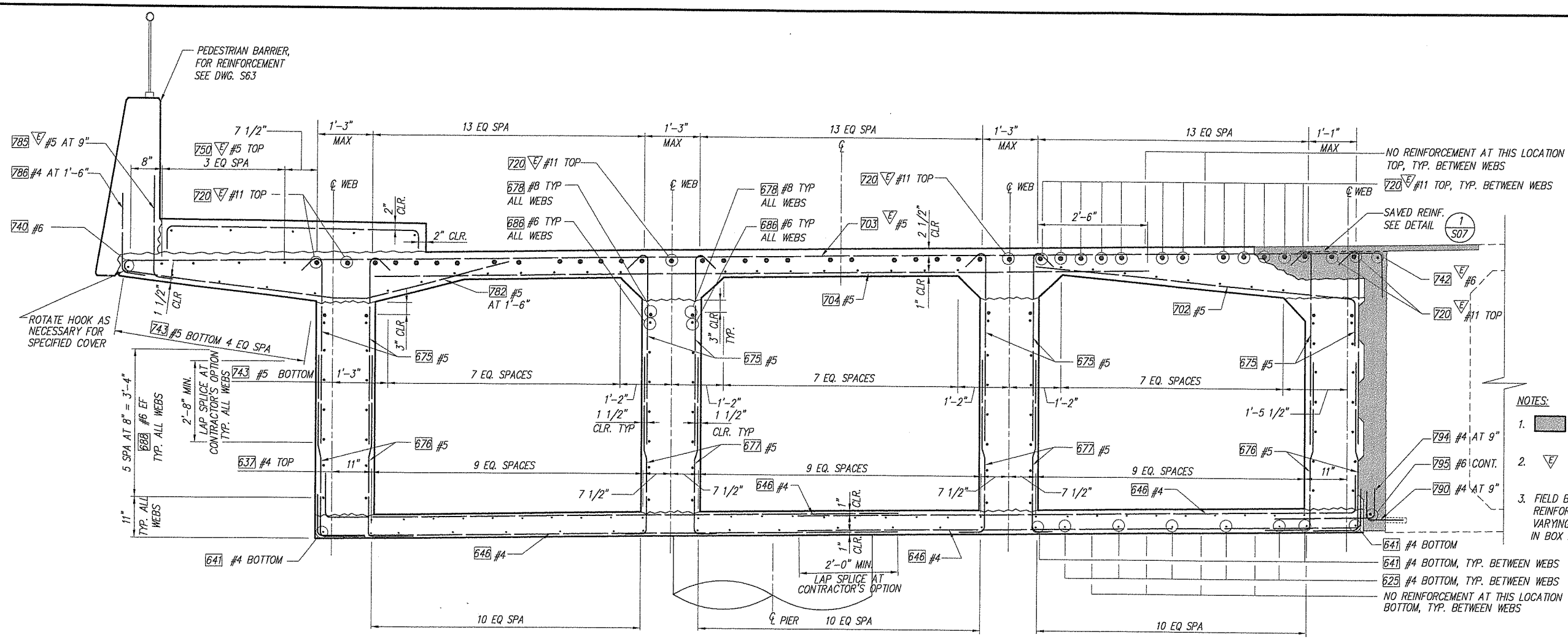

REINFORCING @ PIER 2 – WEST

NOTES:

1. CLOSURE SEE DWG. S62
2. DENOTES EPOXY COATED REBAR
3. FIELD BEND LONGITUDINAL SLAB REINFORCEMENT AS REQ'D. TO MATCH VARYING SLAB THICKNESS AND CHANGES IN BOX DEPTH AND BRIDGE WIDTH.

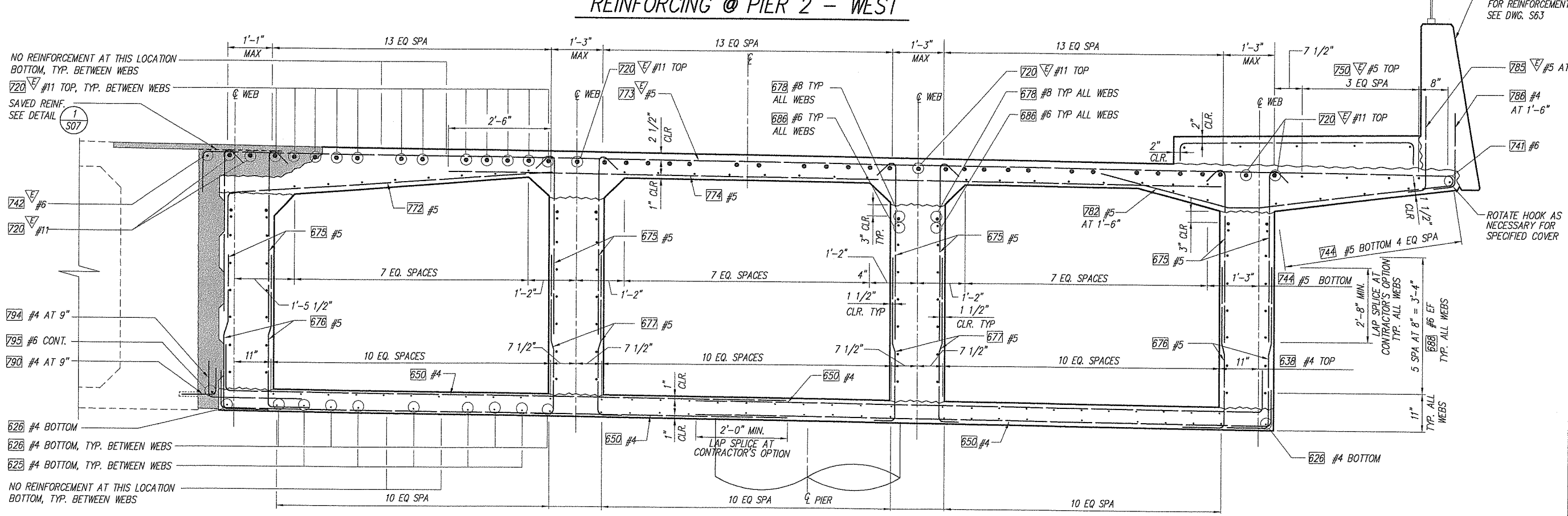

REINFORCING @ PIER 2 – EAST

DESIGNED C. TOTTEN
DRAWN J. WILKES
CRP 39922
HOR. N/A
VERT. N/A
DATE FEB. 20, 2004
DWG: S42
SHEET 44 OF 78

CALL 48 HOURS BEFORE YOU DIG 1-800-553-4344 "It's the Law" CLARK COUNTY UTILITIES COORDINATING COUNCIL

DESIGN & ENGINEERING DIVISION
NE 20TH AVE/HGWY 99 REALIG.
CLARK COUNTY
TYPICAL SECTION REINFORCING PIER 2

STATE OF WASHINGTON REGISTERED PROFESSIONAL ENGINEER 24855 EXPIRES 2/10/2006

105 N. Evergreen Blvd., Suite 300 Vancouver, WA 98660-3123 Phone: (360) 737-4613 Fax: (360) 737-9601 E-MAIL:
otak Incorporated

1111 SW 10th Avenue Suite 1600 Portland, Oregon 97204 503-227-3251
kpff Consulting Engineers

proud past, promising future
CLARK COUNTY WASHINGTON

JOB #	JOB NAME	FILE PATH & NAME	PLOTTED DATE & TIME	UPDATED BY	PLOT SCALE	'PCP' FILE	PLOT VIEW
99680	N.E. 20 th AVE HIGHWAY 99	V:\BRIDGE H-P\N.E. HIGHWAY 99 (99406)\DESIGN\99680-S42.DWG	JUL. 13, 2001 3:18:54 PM	RICKT	1:1 (1:2)		PLOT

XREFS: X99680,

Fed. Aid No.
STPF-4253(010)

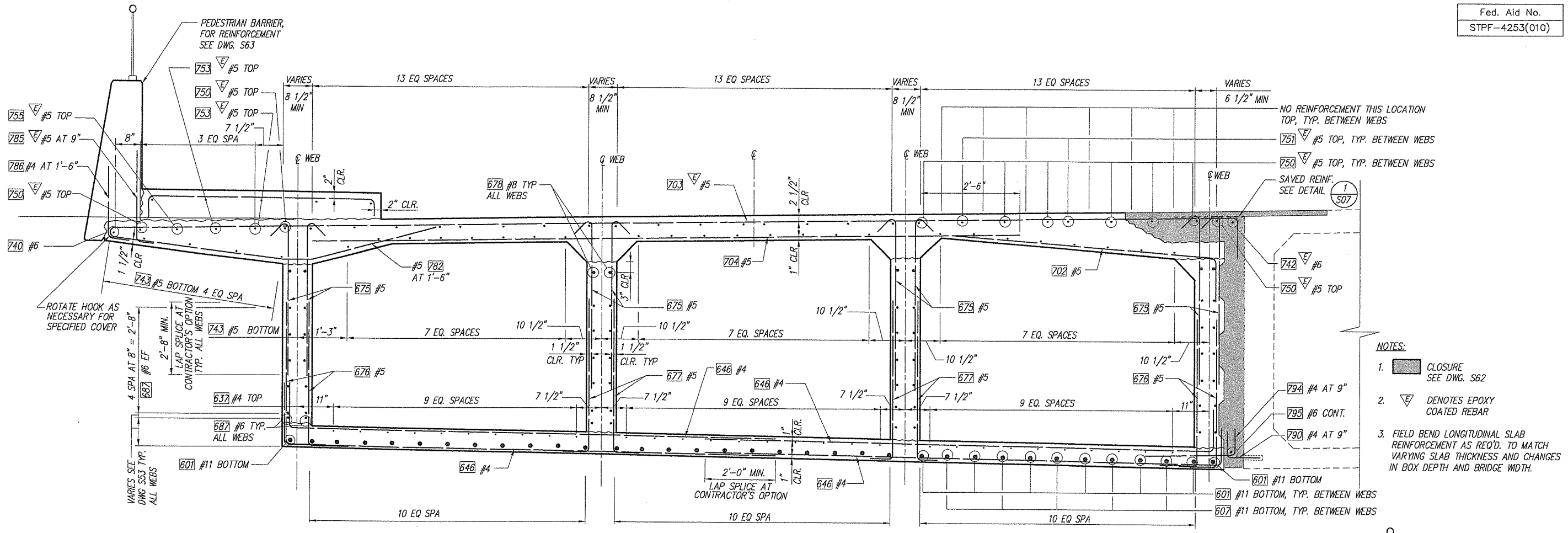

NOTES:

1. CLOSURE SEE DWG. S62
2. DENOTES EPOXY COATED REBAR
3. FIELD BEND LONGITUDINAL SLAB REINFORCEMENT AS REQ'D. TO MATCH VARYING SLAB THICKNESS AND CHANGES IN BOX DEPTH AND BRIDGE WIDTH.

REINFORCING @ SPAN 2 – WEST

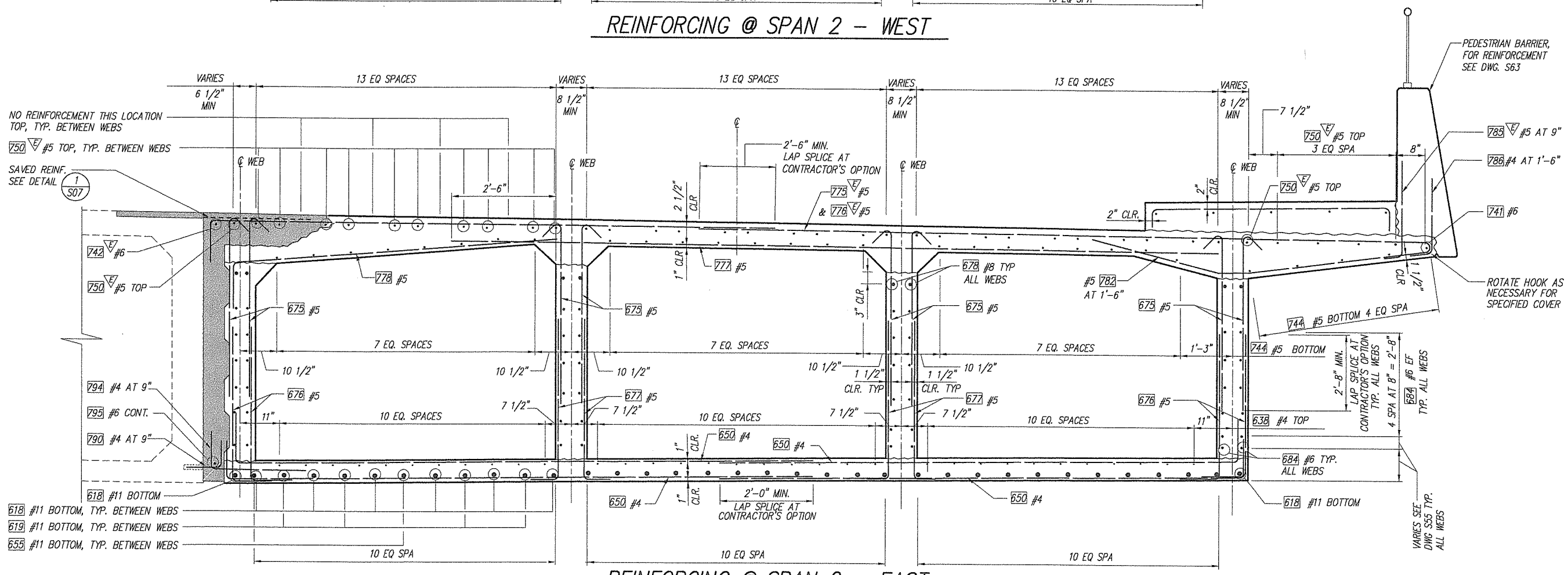

REINFORCING @ SPAN 2 – EAST

DESIGNED C. TOTTEN
DRAWN J. WILKES
CRP 392922
HOR. N/A
VERT. N/A
DATE FEB. 20, 2004
DWG: S43
SHEET 45 OF 78

CALL 48 HOURS BEFORE YOU DIG 1-800-553-4344 "It's the Law" CLARK COUNTY UTILITIES COORDINATING COUNCIL

DESIGN & ENGINEERING DIVISION

NE 20TH AVE/HGWY 99 REALIG.
CLARK COUNTY
TYPICAL SECTION REINFORCING
SPAN 2

STATE OF WASHINGTON — JAMES H. HASLTON — STRUCTURAL — REGISTERED PROFESSIONAL ENGINEER — 2/16/04
EXPIRES: 12/9/2005

otak Incorporated — 105 W. Evergreen Blvd., Suite 300, Vancouver, WA 98660-3123, Phone: (360) 737-8613, Fax: (360) 737-9401

kpff Consulting Engineers — 111 SW 5th Avenue, Suite 2500, Portland, Oregon 97204, 503-227-3251

proud past, promising future
CLARK COUNTY WASHINGTON

PLOTTED DATE & TIME	UPDATED BY	PLOT SCALE	'PCP' FILE	PLOT VIEW
JUL. 13, 2001 3:18:54 PM	RICKT	1:1 (1:2)		PLOT

FILE PATH & NAME
V:\BRIDGE H-P\N.E. HIGHWAY 99 (99406)\DESIGN\99680-S43.DWG

JOB #	JOB NAME
99680	N.E. 20 th AVE HIGHWAY 99

XREFS: X99680.

Fed. Aid No.
STPF-4253(010)

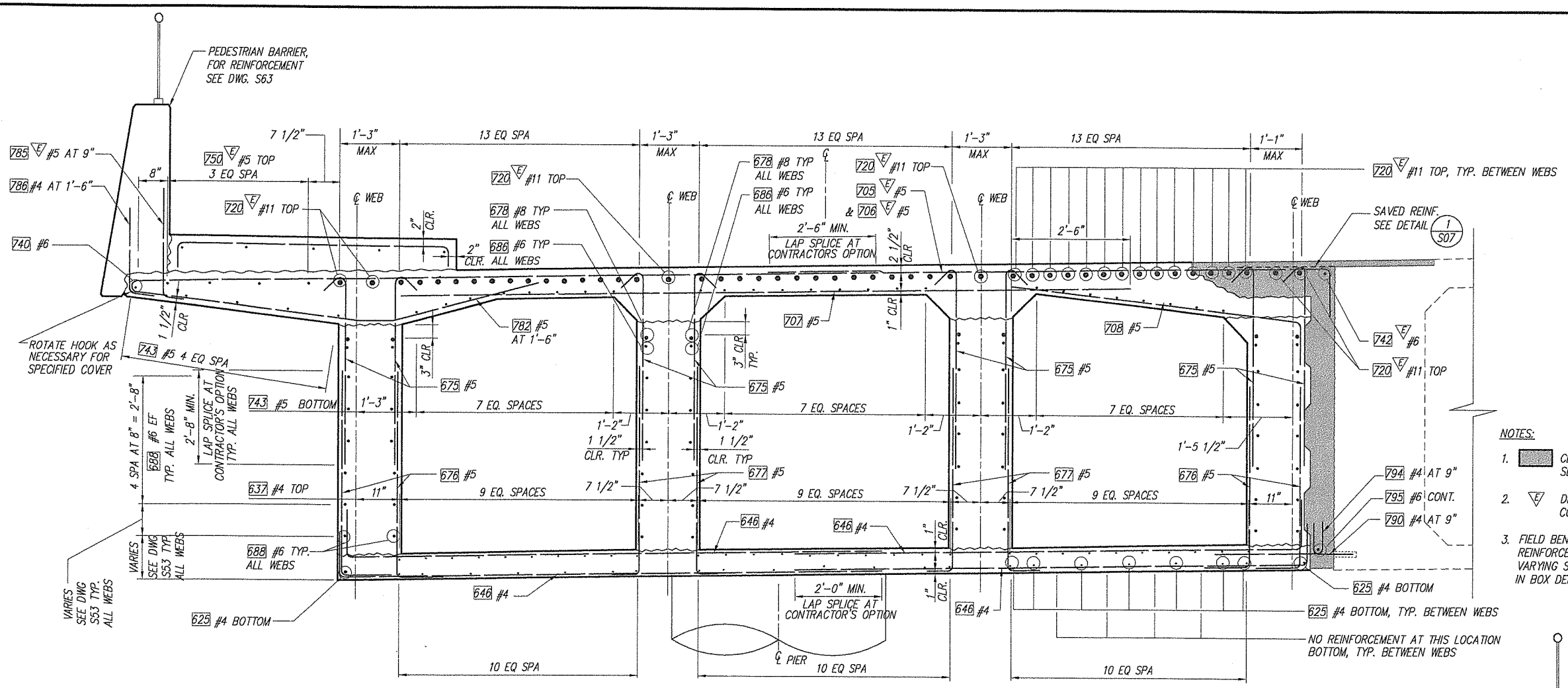

REINFORCING @ PIER 3 – WEST

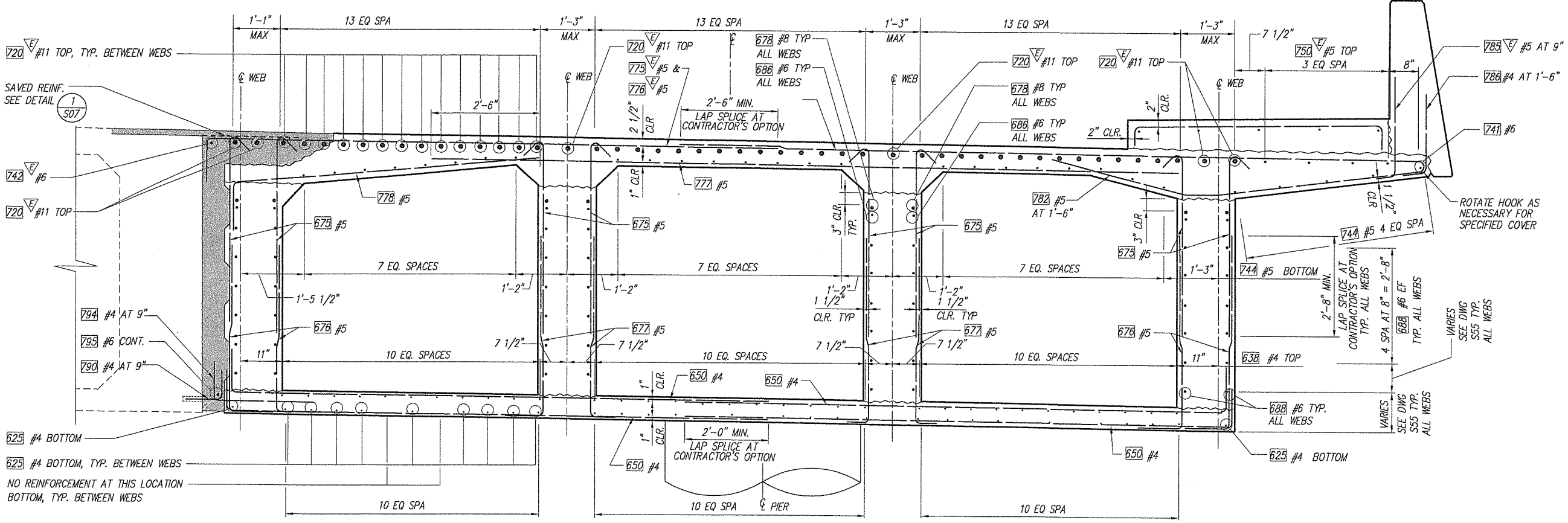

REINFORCING @ PIER 3 – EAST

NOTES:

1. CLOSURE SEE DWG. S62
2. DENOTES EPOXY COATED REBAR
3. FIELD BEND LONGITUDINAL SLAB REINFORCEMENT AS REQ'D. TO MATCH VARYING SLAB THICKNESS AND CHANGES IN BOX DEPTH AND BRIDGE WIDTH.

DESIGNED C. TOTTEN
DRAWN J. WILKES
CRP 392922
HOR. N/A
VERT. N/A
DATE FEB. 20, 2004
DWG. S44
SHEET 46 OF 78

CALL 48 HOURS BEFORE YOU DIG 1-800-553-4344 "It's the Law" CLARK COUNTY UTILITIES COORDINATING COUNCIL

DESIGN & ENGINEERING DIVISION

NE 20TH AVE/HGWY 99 REALIG.
CLARK COUNTY
TYPICAL SECTION REINFORCING
PIER 3

STATE OF WASHINGTON HASAN 25880 PROFESSIONAL ENGINEER
EXPIRES 2/10/2005

otak Incorporated
105 W. Evergreen Blvd., Suite 500
Vancouver, WA 98660-3123
Phone: (360) 696-8113
Fax: (360) 737-8631

kpff Consulting Engineers
111 SW 5th Avenue
Suite 2500
Portland, Oregon 97204
503-227-3251

proud past, promising future

CLARK COUNTY
WASHINGTON

PLOTTED DATE & TIME	UPDATED BY	PLOT SCALE	'PCP' FILE	PLOT VIEW
JUL. 13, 2001 3:18:54 PM	RICKT	1:1 (1:2)		PLOT

JOB #	JOB NAME	FILE PATH & NAME
99680	N.E. 20 th AVE HIGHWAY 99	V:\BRIDGE H-P\N.E. HIGHWAY 99 (99406)\DESIGN\99680-S44.DWG
XREF'S: X99680,		

Fed. Aid No.
STPF-4253(010)

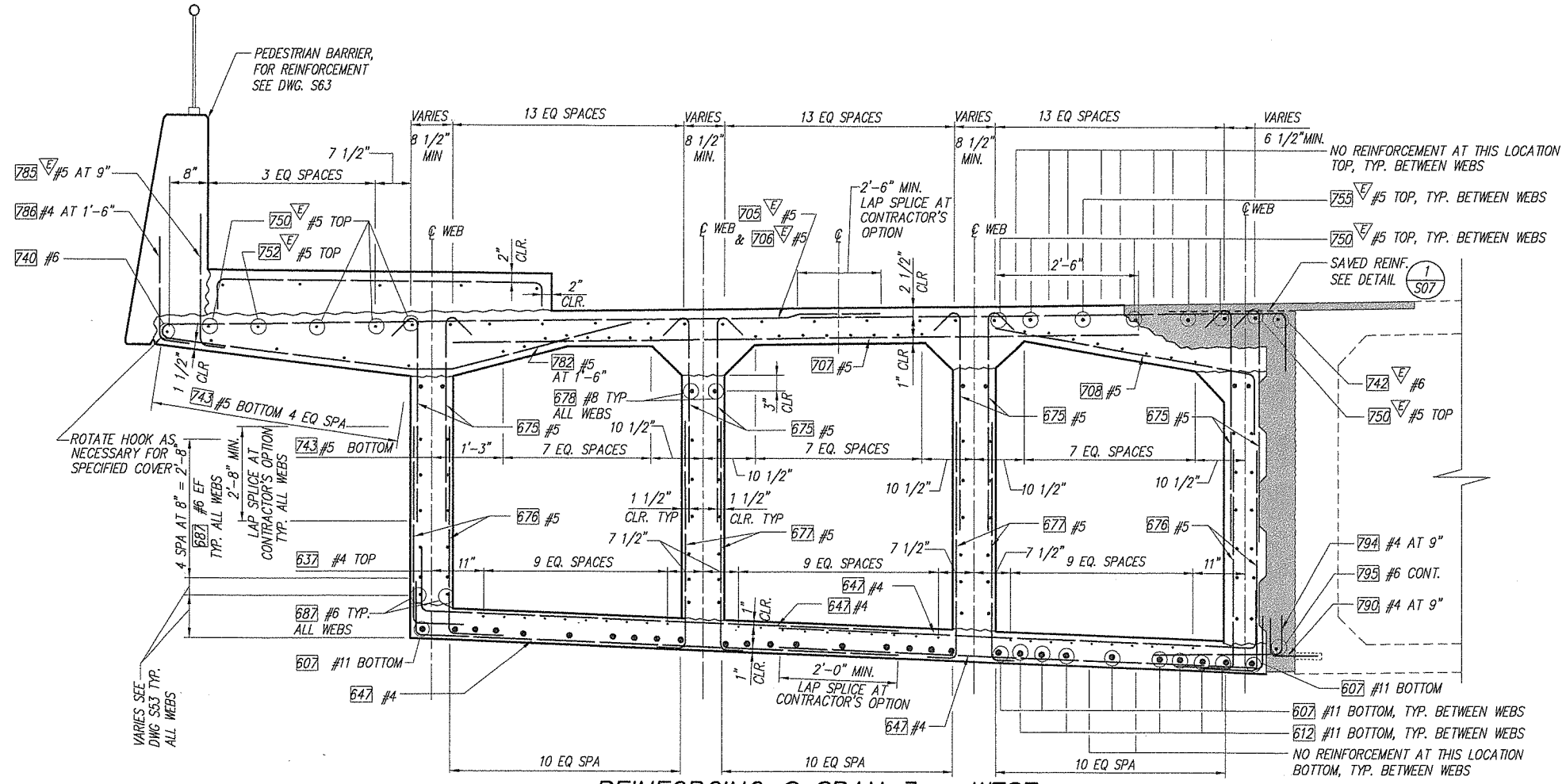

REINFORCING @ SPAN 3 – WEST

NOTES:

1. CLOSURE SEE DWG. S62
2. DENOTES EPOXY COATED REBAR
3. FIELD BEND LONGITUDINAL SLAB REINFORCEMENT AS REQ'D. TO MATCH VARYING SLAB THICKNESS AND CHANGES IN BOX DEPTH AND BRIDGE WIDTH.

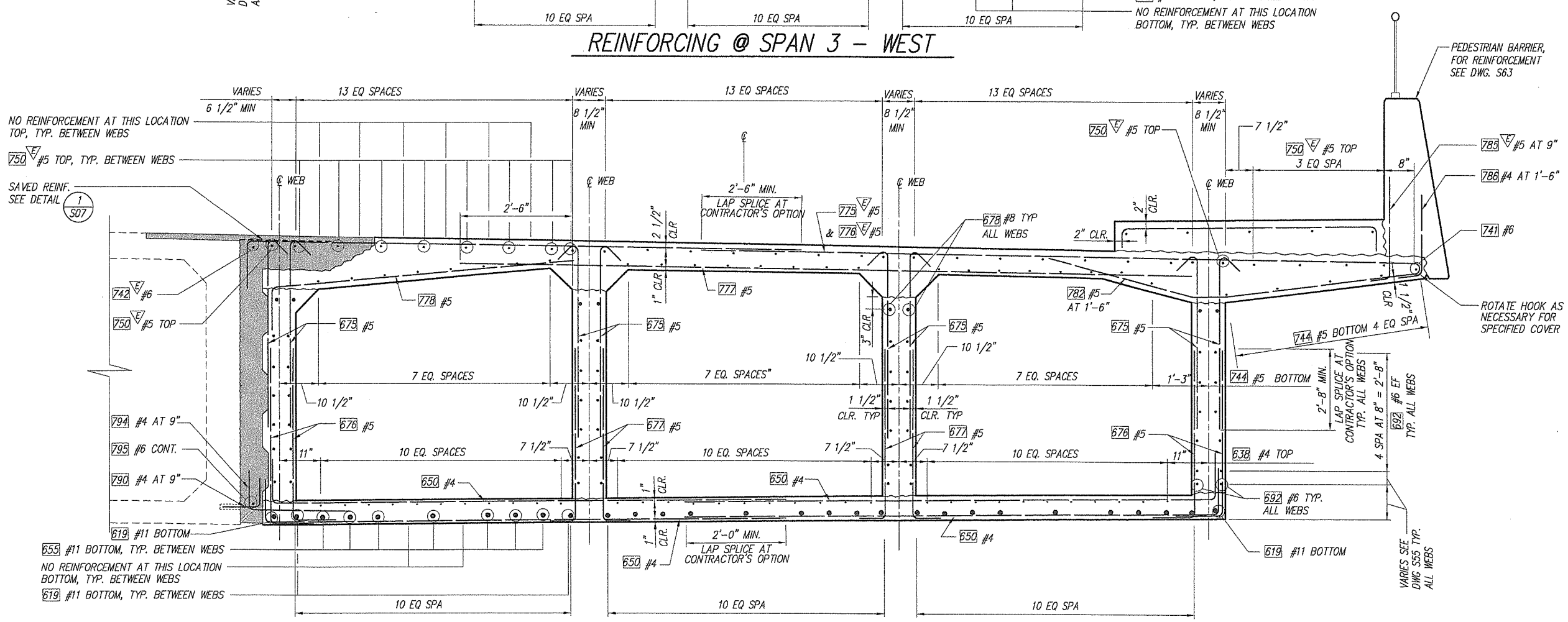

REINFORCING @ SPAN 3 – EAST

DESIGNED C. TOTTEN
DRAWN J. MILKES
CRP 392922
HOR. N/A
VERT. N/A
DATE FEB. 20, 2004
DWG: S45
SHEET 47 OF 78

CALL 48 HOURS BEFORE YOU DIG 1-800-553-4344 "It's the Law" CLARK COUNTY UTILITIES COORDINATING COUNCIL

DESIGN & ENGINEERING DIVISION

NE 20TH AVE/HGWY 99 REALIG.
CLARK COUNTY
TYPICAL SECTION REINFORCING
SPAN 3

STATE OF WASHINGTON — JAMES R. HILLMAN — 22834 — PROFESSIONAL ENGINEER — 2/11/04 — EXPIRES 12/12/2005

103 W. Evergreen Blvd., Suite 300
Vancouver, WA 98660-3123
Phone: (360) 737-8613
FAX: (360) 737-8651
otak Incorporated

111 SW 5th Avenue
Suite 2500
Portland, Oregon 97204
503-227-3251
kpff Consulting Engineers

proud past, promising future
CLARK COUNTY WASHINGTON

PLOTTED DATE & TIME	UPDATED BY	PLOT SCALE	'PCP' FILE	PLOT VIEW
JUL. 13, 2001 3:18:54 PM	RICKT	1:1 (1:2)		PLOT

FILE PATH & NAME: V:\BRIDGE H-P\N.E. HIGHWAY 99 (99406)\DESIGN\99680-S45.DWG

JOB #	JOB NAME
99680	N.E. 20 th AVE HIGHWAY 99

XREFS: X99680,

Fed. Aid No.
STPF-4253(010)

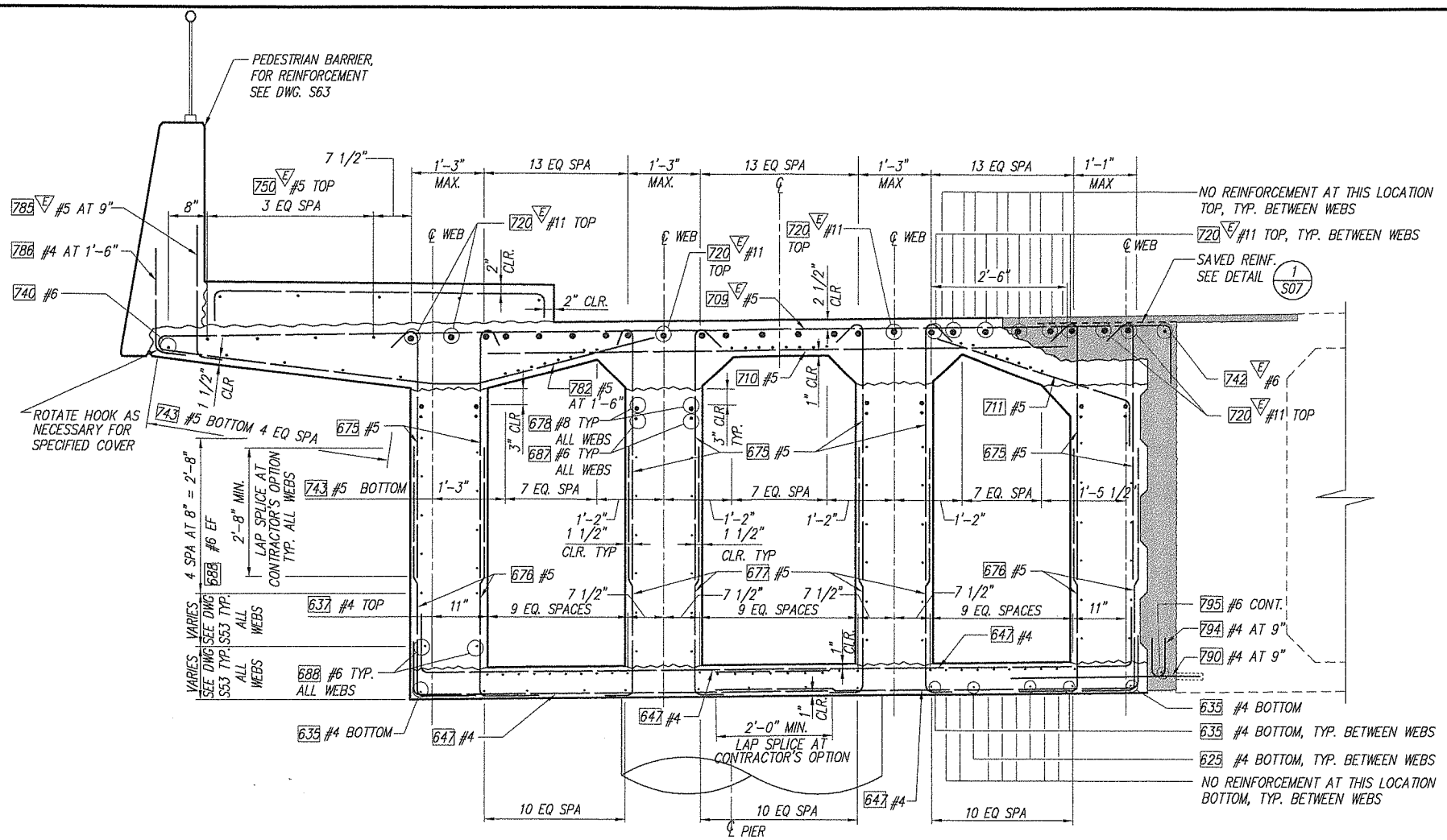

REINFORCING @ PIER 4 – WEST

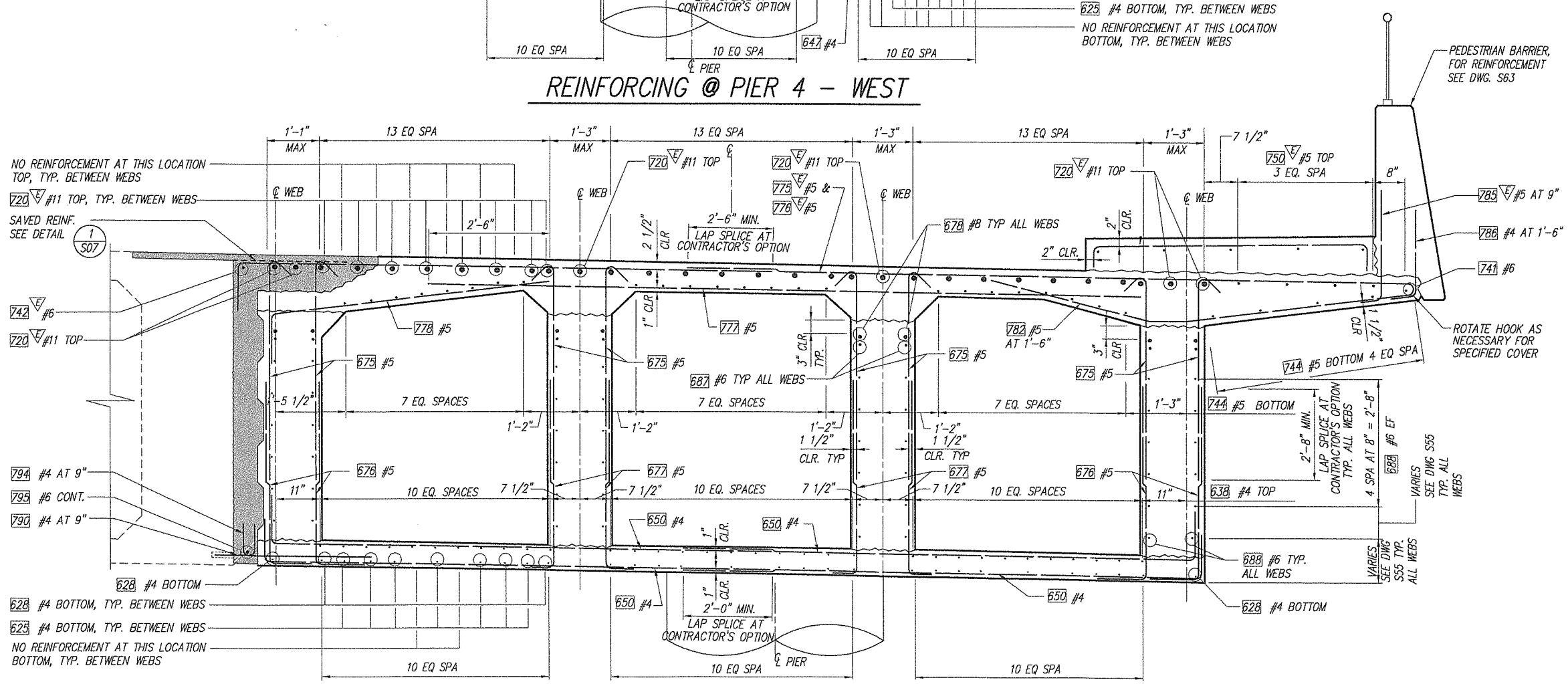

REINFORCING @ PIER 4 – EAST

NOTES:

1. CLOSURE SEE DWG. S62
2. DENOTES EPOXY COATED REBAR
3. FIELD BEND LONGITUDINAL SLAB REINFORCEMENT AS REQ'D. TO MATCH VARYING SLAB THICKNESS AND CHANGES IN BOX DEPTH AND BRIDGE WIDTH.

DESIGNED C. TOTTEN
DRAWN J. WILKES
CRP 392822
HOR. N/A
VERT. N/A
DATE FEB. 20, 2004
DWG. S46
SHEET 48 OF 78

CALL 48 HOURS BEFORE YOU DIG 1-800-553-4344 "It's the Law" CLARK COUNTY UTILITIES COORDINATING COUNCIL

DESIGN & ENGINEERING DIVISION
NE 20TH AVE/HGWY 99 REALIG.
CLARK COUNTY
TYPICAL SECTION REINFORCING
PIER 4

STATE OF WASHINGTON 22503 PROFESSIONAL ENGINEER
EXPIRES 2/9/2006

otak Incorporated
105 W. Evergreen Blvd. Suite 300
Vancouver, WA 98660-3123
Phone: (360) 737-8613
FAX: (360) 737-8661

kpff Consulting Engineers
111 SW 5th Avenue Suite 2300
Portland, Oregon 97204
503-227-3251

proud past, promising future
CLARK COUNTY WASHINGTON

PLOTTED DATE & TIME	UPDATED BY	PLOT SCALE	'PCP' FILE	PLOT VIEW
JUL. 13, 2001 3:18:54 PM	RICKT	1:1 (1:2)		PLOT

JOB #	JOB NAME	FILE PATH & NAME
99680	N.E. 20 th AVE HIGHWAY 99	V:\BRIDGE H-P\N.E. HIGHWAY 99 (99406)\DESIGN\99680-S46.DWG
XREFS: X99680,		

Fed. Aid No.
STPF-4253(010)

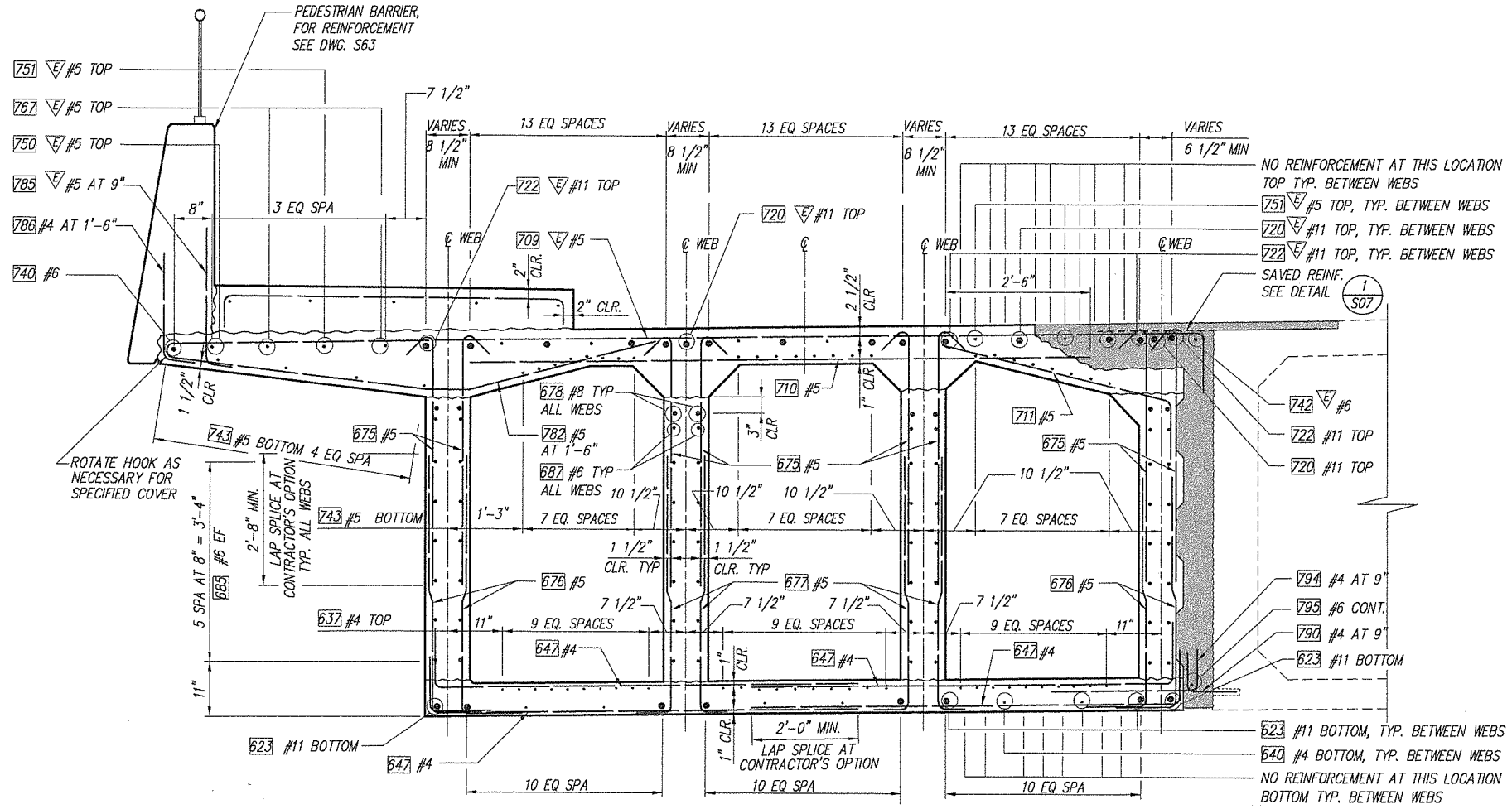

REINFORCING @ SPAN 4 – WEST

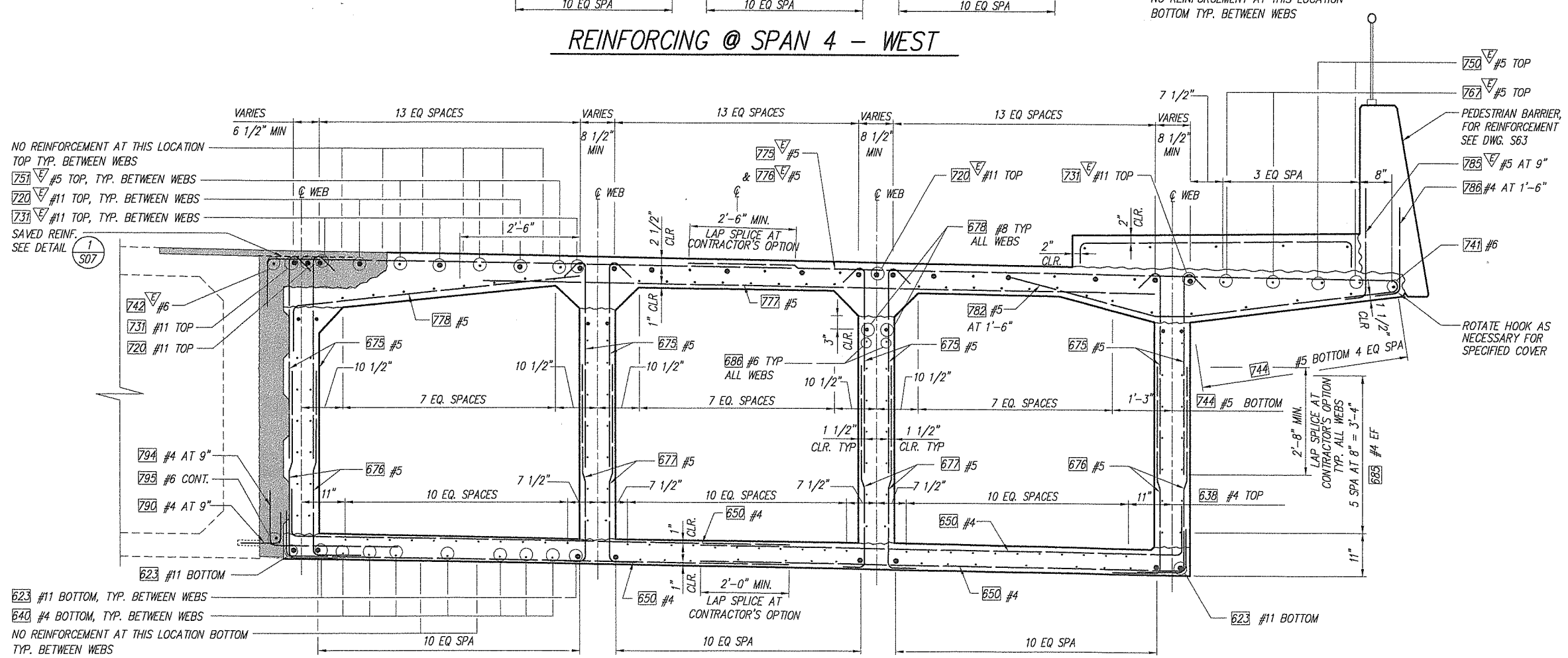

REINFORCING @ SPAN 4 – EAST

NOTES:

1. CLOSURE SEE DWG. S62
2. DENOTES EPOXY COATED REBAR
3. FIELD BEND LONGITUDINAL SLAB REINFORCEMENT AS REQ'D. TO MATCH VARYING SLAB THICKNESS AND CHANGES IN BOX DEPTH AND BRIDGE WIDTH.

DESIGNED C. TOTTEN
DRAWN J. MUKES
CRP 392822
HOR. N/A
VERT. N/A
DATE FEB. 20, 2004
DWG. S47
SHEET 49 OF 78

CALL 48 HOURS BEFORE YOU DIG 1-800-553-4344 "It's the Law" CLARK COUNTY UTILITIES COORDINATING COUNCIL

DESIGN & ENGINEERING DIVISION
NE 20TH AVE/HGWY 99 REALIG.
CLARK COUNTY
TYPICAL SECTION REINFORCING
SPAN 4

STATE OF WASHINGTON REGISTERED PROFESSIONAL ENGINEER
EXPIRES 2/10/06

otak Incorporated
105 W. Evergreen Blvd., Suite 300 Vancouver, WA 98660-3123 Phone: (360) 737-9613 FAX: (360) 737-8651

kpff Consulting Engineers
111 SW 5th Avenue Suite 2500 Portland, Oregon 97204 503-227-1251

proud past, promising future
CLARK COUNTY WASHINGTON

PLOTTED DATE & TIME	UPDATED BY	PLOT SCALE	'PCP' FILE	PLOT VIEW
JUL. 13, 2001 3:18:54 PM	RICKT	1:1 (1:2)		PLOT

FILE PATH & NAME: V:\BRIDGE H-P\N.E. HIGHWAY 99 (999406)\DESIGN\99680-S47.DWG

JOB #	JOB NAME
99680	N.E. 20 th AVE HIGHWAY 99

XREFS: X99680,

Fed. Aid No.
STPF-4253(010)

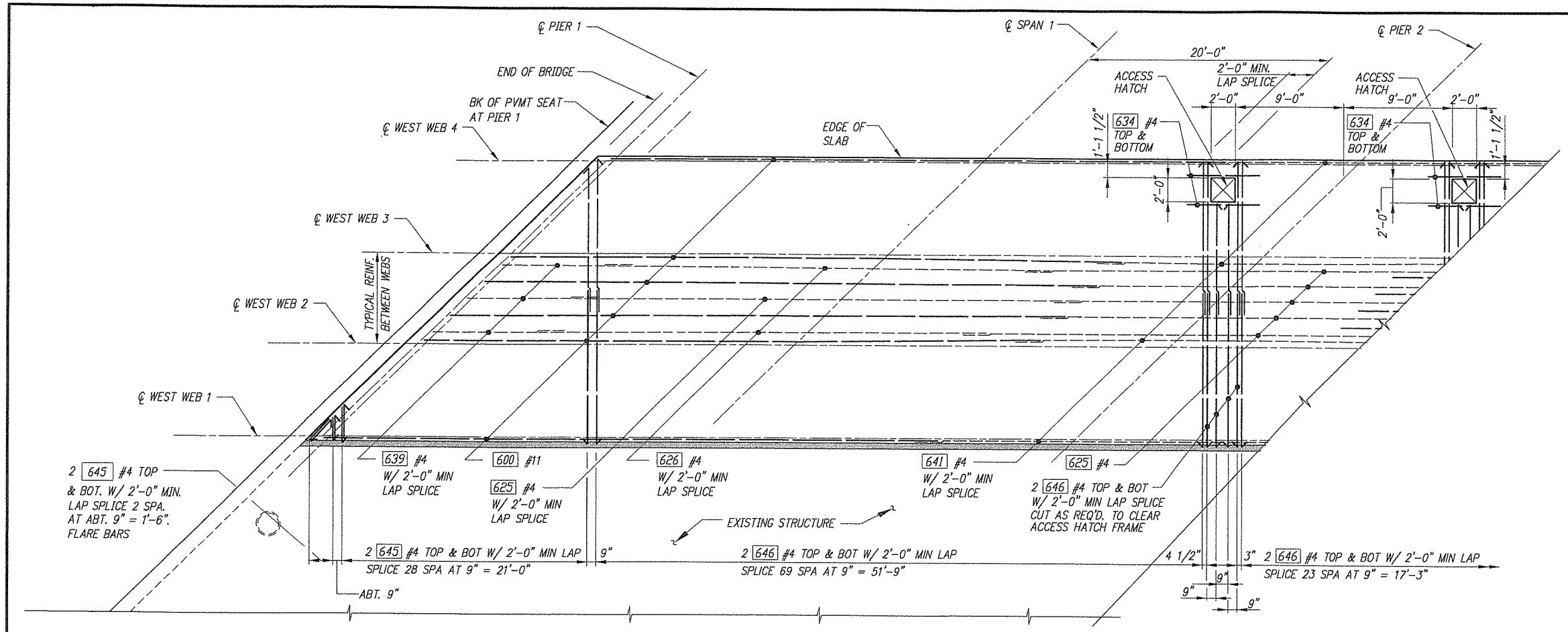

WEST – WIDENING

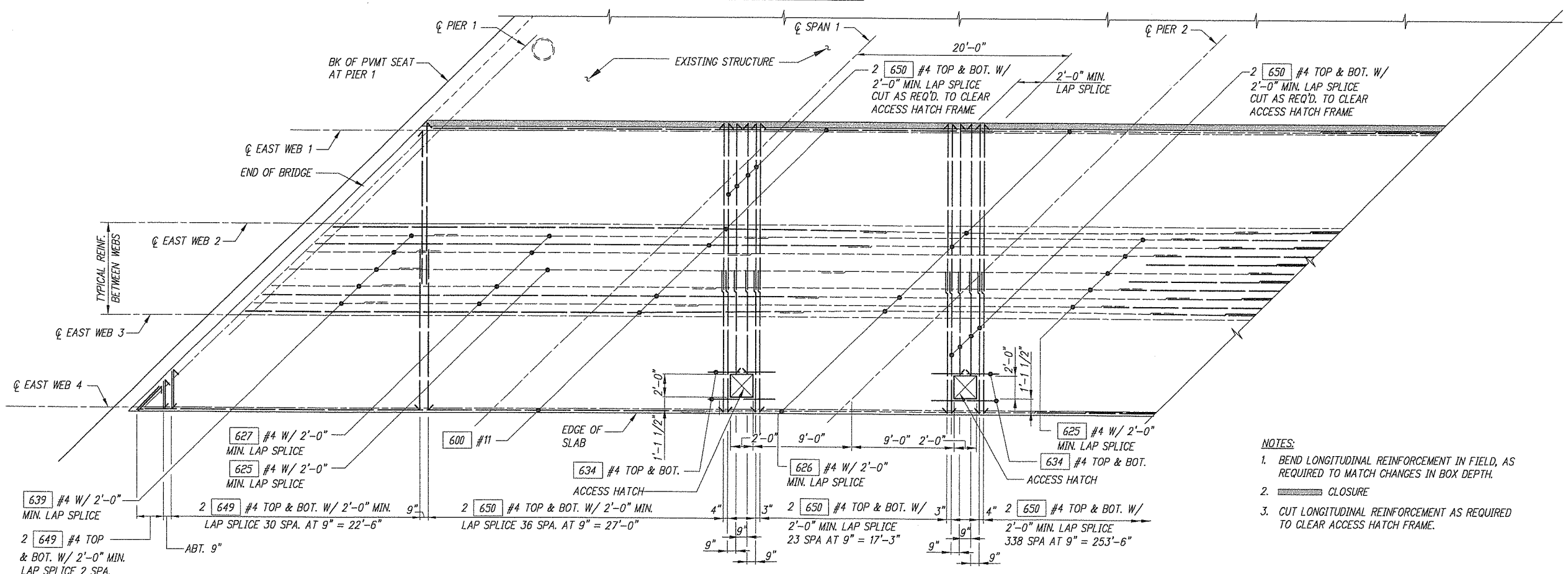

EAST – WIDENING

NOTES:

1. BEND LONGITUDINAL REINFORCEMENT IN FIELD, AS REQUIRED TO MATCH CHANGES IN BOX DEPTH.
2. CLOSURE
3. CUT LONGITUDINAL REINFORCEMENT AS REQUIRED TO CLEAR ACCESS HATCH FRAME.

BOTTOM SLAB REINFORCING PLAN – SPAN 1

DESIGNED C. TOTTEN
DRAWN J. WILKES
CRP 392929
HOR. N/A
VERT. N/A
DATE FEB. 20, 2004
DWG: S4B
SHEET 50 OF 78

CALL 48 HOURS BEFORE YOU DIG 1-800-553-4344 "It's the Law" CLARK COUNTY UTILITIES COORDINATED COUNCIL

DESIGN & ENGINEERING DIVISION
NE 20TH AVE/HGWY 99 REALIG.
CLARK COUNTY
BOTTOM SLAB REINFORCING
SPAN 1

STATE OF WASHINGTON 22836 REGISTERED PROFESSIONAL ENGINEER
2/11/04
EDT/BES 2/9/2006

otak Incorporated
105 W. Evergreen Blvd., Suite 300
Vancouver, WA 98660-3183
Phone: (360) 737-8513
FAX: (360) 737-8661

kpff Consulting Engineers
111 SW 5th Avenue
Suite 2500
Portland, Oregon 97204
503-227-3251

proud past, promising future
CLARK COUNTY WASHINGTON

JOB #	JOB NAME	FILE PATH & NAME	PLOTTED DATE & TIME	UPDATED BY	PLOT SCALE	'PCP' FILE	PLOT VIEW
99680	N.E. HIGHWAY 99	D:\2-PROJECTS\99680\99680-S59.DWG	-	---	1=1	---	---

XREFS: X99680, NE99XMSP1A, NE99XRW, NE99XBRIDGE, NE99XSURV

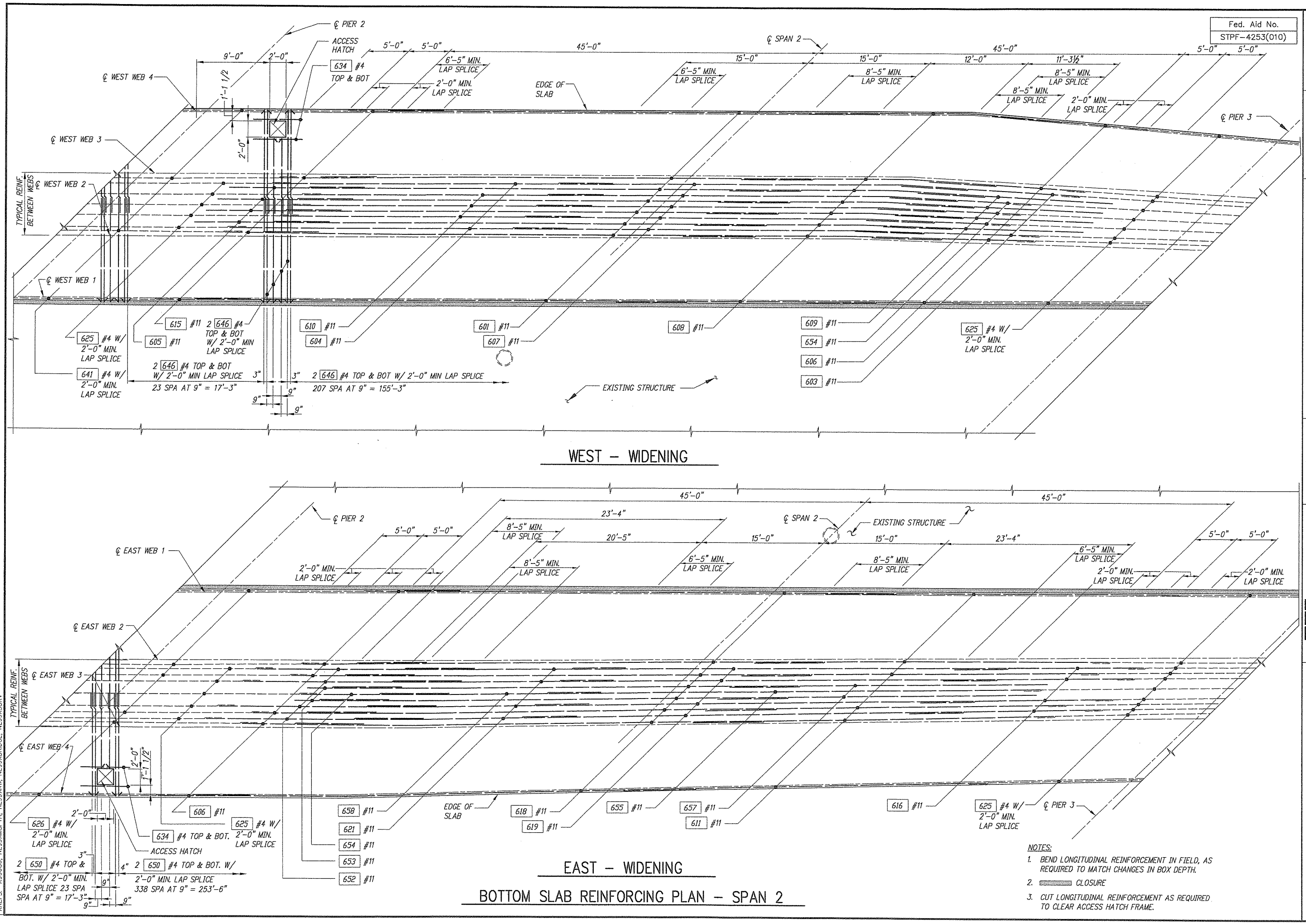

BOTTOM SLAB REINFORCING PLAN - SPAN 2

NOTES:

1. BEND LONGITUDINAL REINFORCEMENT IN FIELD, AS REQUIRED TO MATCH CHANGES IN BOX DEPTH.
2. CLOSURE
3. CUT LONGITUDINAL REINFORCEMENT AS REQUIRED TO CLEAR ACCESS HATCH FRAME.

DESIGNED C. TOTTEN
DRAWN J. WILKES
CRP 392832
HOR. N/A
VERT. N/A
DATE FEB. 20, 2004
DWG: S49
SHEET 51 OF 78

CALL 48 HOURS BEFORE YOU DIG 1-800-553-4344 "It's the Law" CLARK COUNTY UTILITIES COORDINATING COUNCIL

DESIGN & ENGINEERING DIVISION

NE 20TH AVE/HGWY 99 REALIG.
CLARK COUNTY
BOTTOM SLAB REINFORCING
SPAN 2

STATE OF WASHINGTON
VIRGIL R. HASLEN
REGISTERED PROFESSIONAL ENGINEER
21464
EXPIRES 2/9/2005

otak Incorporated
105 W. Evergreen Blvd., Suite 300
Vancouver, WA 98660-3123
Phone: (360) 737-4813
FAX: (360) 737-9651

kpff Consulting Engineers
111 SW 5th Avenue
Suite 2500
Portland, Oregon 97204
503-227-3251

proud past, promising future

CLARK COUNTY
WASHINGTON

PLOTTED DATE & TIME | UPDATED BY | PLOT SCALE 1=1 | 'PCP' FILE | PLOT VIEW

FILE PATH & NAME: D:\2-PROJECTS\99680\99680-S59.DWG

JOB NAME: N.E. HIGHWAY 99

JOB # 99680

XREFS: X99680, NE99XMSP1A, NE99XRW, NE99XBRIDGE, NE99XSURV

Fed. Aid No.
STPF-4253(010)

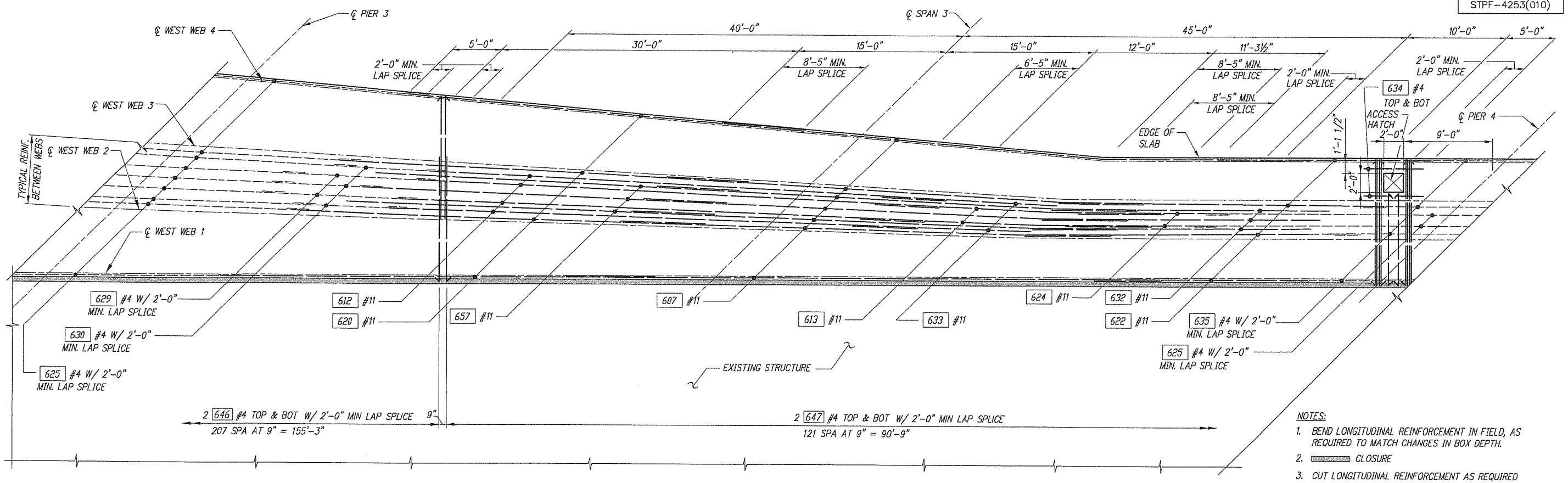

NOTES:

1. BEND LONGITUDINAL REINFORCEMENT IN FIELD, AS REQUIRED TO MATCH CHANGES IN BOX DEPTH.
2. CLOSURE
3. CUT LONGITUDINAL REINFORCEMENT AS REQUIRED TO CLEAR ACCESS HATCH FRAME.

WEST – WIDENING

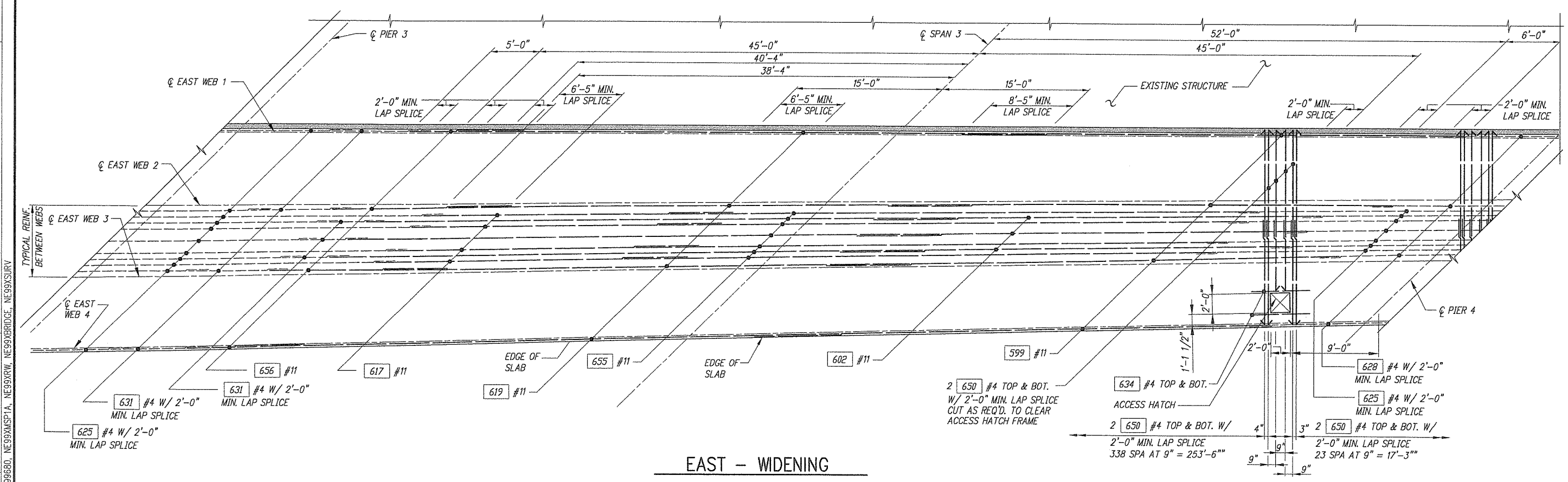

EAST – WIDENING

BOTTOM SLAB REINFORCING PLAN – SPAN 3

DESIGNED C. TOTTEN
DRAWN J. WILKES
CRP 392922
HOR. N/A
VERT. N/A
DATE FEB. 20, 2004
DWG: S50
SHEET 52 OF 78

CALL 48 HOURS BEFORE YOU DIG 1-800-553-4344 "It's the Law" CLARK COUNTY UTILITIES COORDINATING COUNCIL

DESIGN & ENGINEERING DIVISION
NE 20TH AVE/HGWY 99 REALIG.
CLARK COUNTY
BOTTOM SLAB REINFORCING
SPAN 3

STATE OF WASHINGTON 20004 REGISTERED PROFESSIONAL ENGINEER
COPYRIGHT 2/20/2006

105 W. Evergreen Blvd, Suite 300
Vancouver, WA 98660-3183
Phone: (360) 737-6613
FAX: (360) 737-9601

11 SW 6th Avenue
Suite 1500
Portland, Oregon 97204
503-227-3251

Consulting Engineers

proud past, promising future
CLARK COUNTY WASHINGTON

PLOTTED DATE & TIME	UPDATED BY	PLOT SCALE	'PCP' FILE	PLOT VIEW
-	---	1=1	---	

FILE PATH & NAME: D:\2-PROJECTS\99680\99680-S59.DWG

JOB NAME	JOB #
N.E. HIGHWAY 99	99680

XREFS: X99680, NE99XMSP1A, NE99XRW, NE99XBRIDGE, NE99XSURV

Fed. Aid No.
STPF-4253(010)

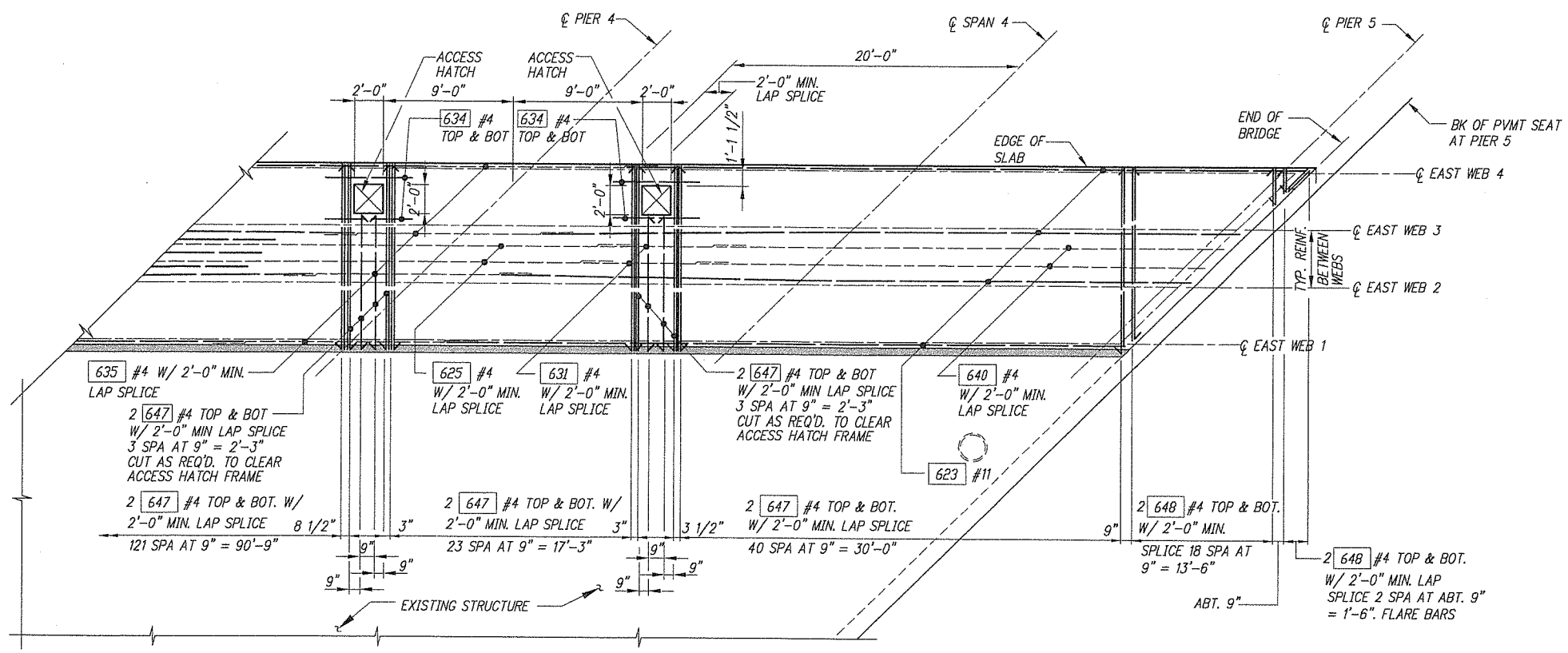

WEST – WIDENING

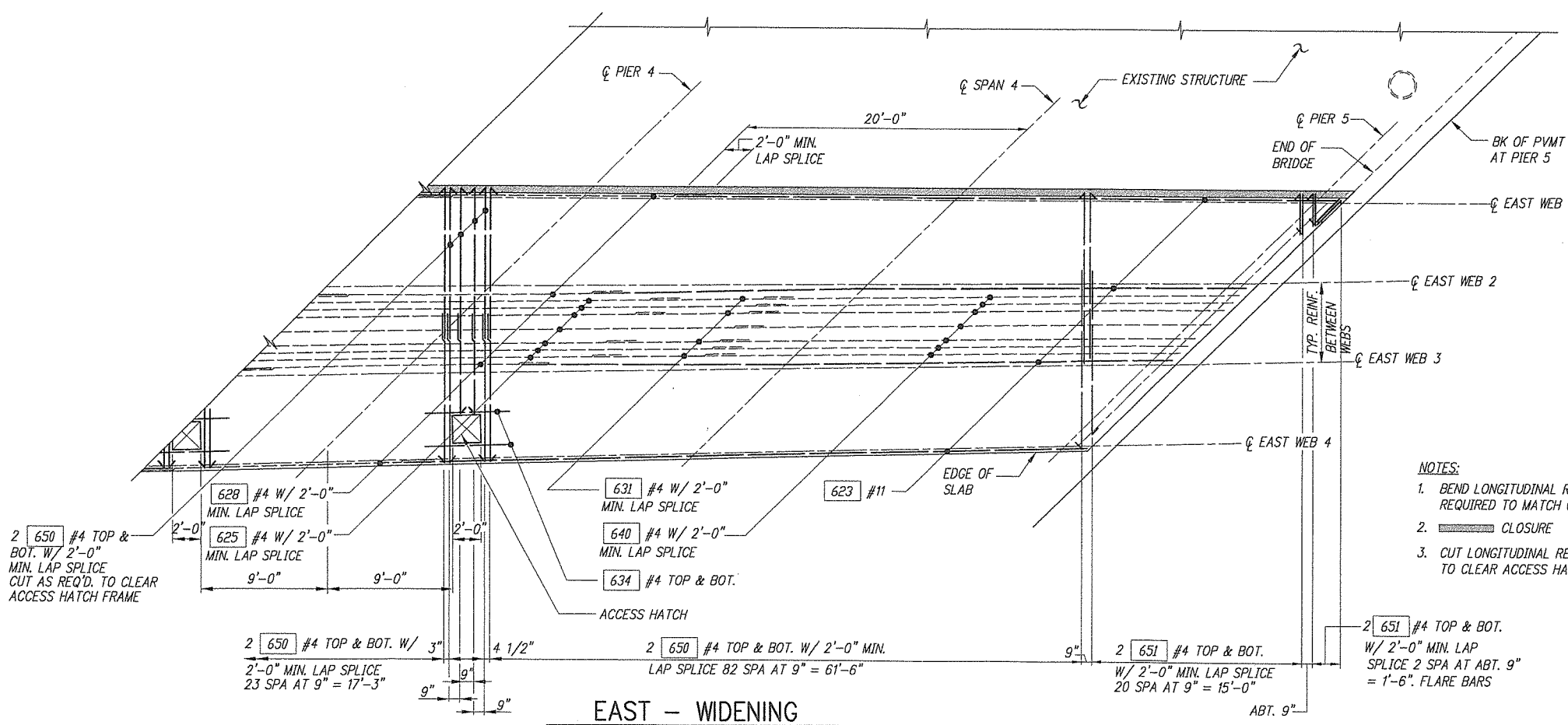

EAST – WIDENING

NOTES:

1. BEND LONGITUDINAL REINFORCEMENT IN FIELD, AS REQUIRED TO MATCH CHANGES IN BOX DEPTH.
2. CLOSURE
3. CUT LONGITUDINAL REINFORCEMENT AS REQUIRED TO CLEAR ACCESS HATCH FRAME.

BOTTOM SLAB REINFORCING PLAN – SPAN 4

DESIGNED C. TOTTEN
DRAWN J. WILKES
CRP 39202
HOR. N/A
VERT. N/A
DATE FEB. 20, 2004
DWG. S51
SHEET 53 OF 78

CALL 48 HOURS BEFORE YOU DIG 1-800-553-4344 "It's the Law" CLARK COUNTY UTILITIES COORDINATING COUNCIL

DESIGN & ENGINEERING DIVISION
NE 20TH AVE/HGWY 99 REALIG.
CLARK COUNTY
BOTTOM SLAB REINFORCING
SPAN 4

STATE OF WASHINGTON
JOHN H. HASLAM
REGISTERED PROFESSIONAL ENGINEER
REVISED 2/17/2004

otak Incorporated
105 W. Evergreen Blvd., Suite 500
Vancouver, WA 98660-3123
Telephone: (360) 696-9465
Fax: (360) 737-8651

kpff Consulting Engineers
111 SW 5th Avenue
Suite 2500
Portland, Oregon 97204
503-227-3251

proud past, promising future
CLARK COUNTY WASHINGTON

PLOTTED DATE & TIME	UPDATED BY	PLOT SCALE	'PCP' FILE	PLOT VIEW
---	---	1=1	---	

JOB #	JOB NAME	FILE PATH & NAME
99680	N.E. HIGHWAY 99	D:\2-PROJECTS\99680\99680-S59.DWG

XREFS: X99680, NE99XMSP1A, NE99XRW, NE99XBRIDGE, NE99XSURV

Fed. Aid No.
STPF-4253(010)

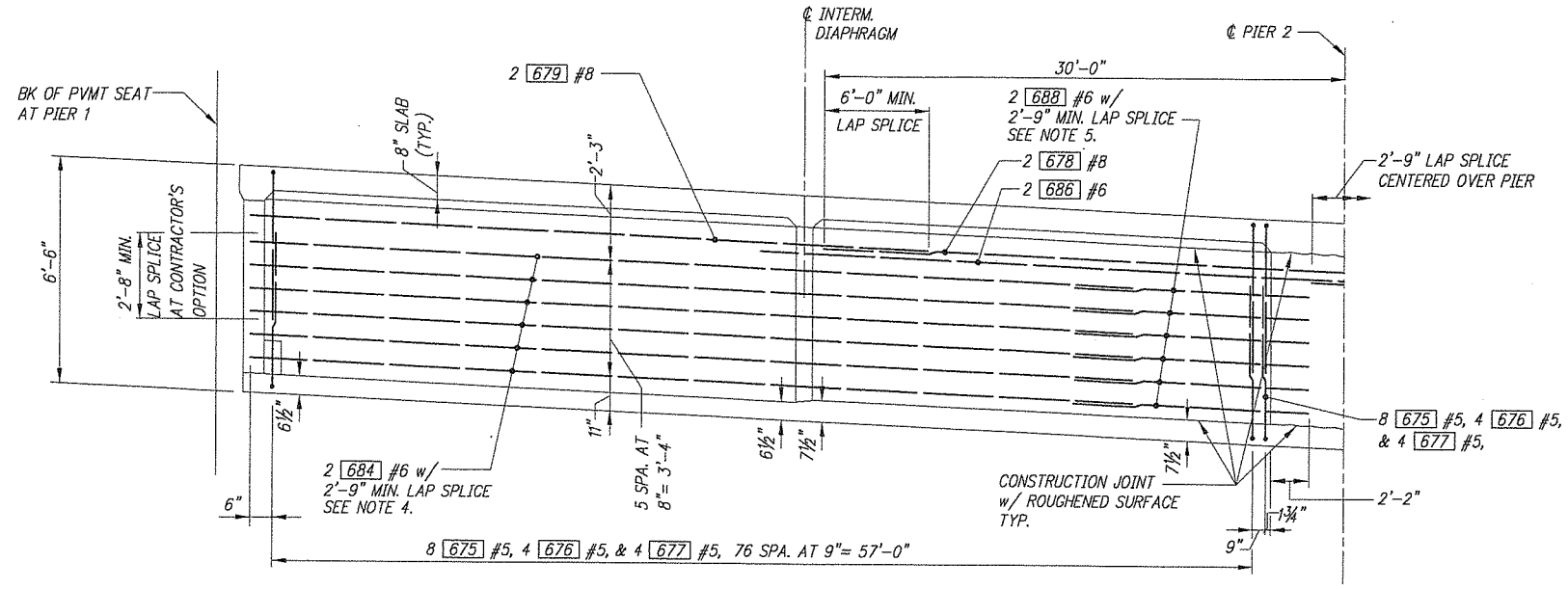

WEST LONGITUDINAL WEB ELEVATION – SPAN 1

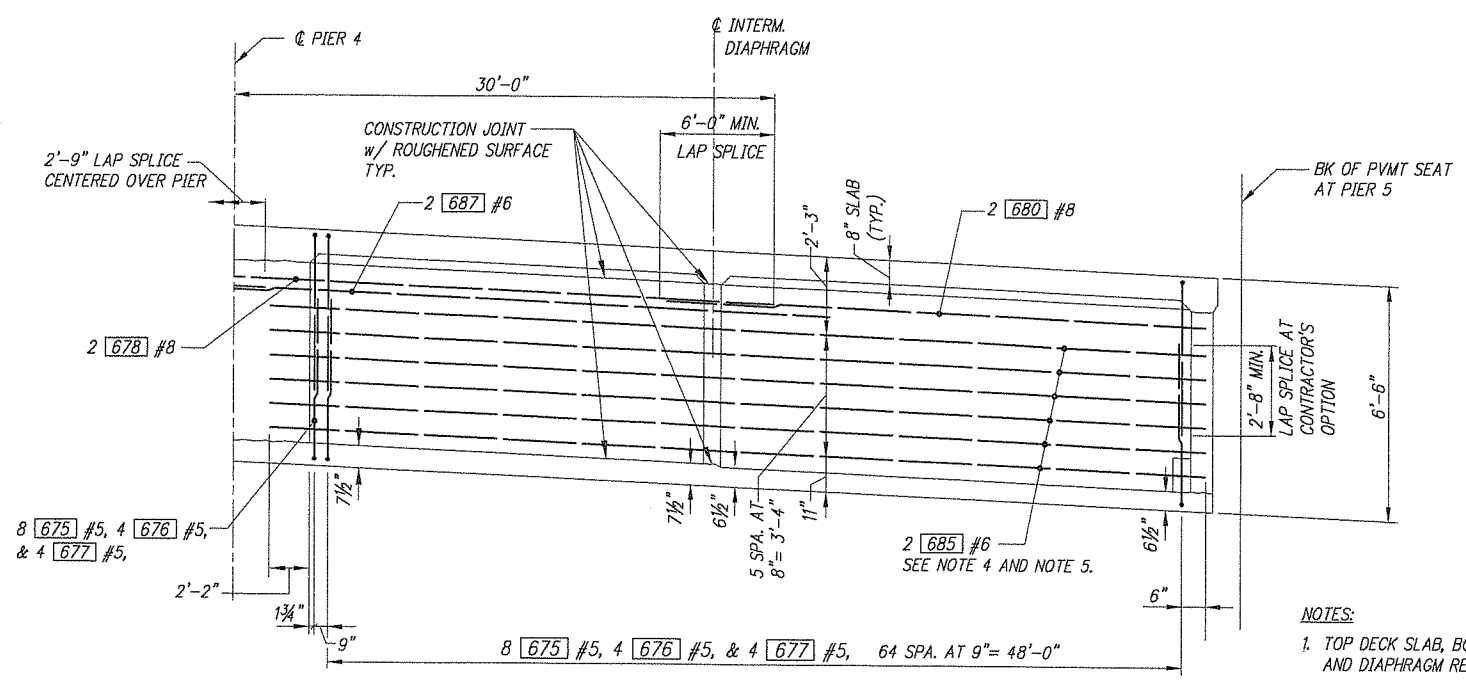

WEST LONGITUDINAL WEB ELEVATION – SPAN 4

NOTES:

1. TOP DECK SLAB, BOTTOM DECK SLAB, CROSS BEAM, AND DIAPHRAGM REINF. NOT SHOWN FOR CLARITY.
2. PLACE STIRRUPS VERTICALLY.
3. BRIDGE CURVE NOT SHOWN FOR CLARITY.
4. FIELD CUT REINFORCEMENT BAR AS REQUIRED.
5. FIELD BEND WHERE REQ'D TO AVOID CONFLICT WITH COLUMN REINF.

DESIGNED C. TOTTEN
DRAWN J. WILKES
CRP 392922
HOR. N/A
VERT. N/A
DATE FEB. 20, 2004
DWG. S52
SHEET 54 OF 78

CALL 48 HOURS BEFORE YOU DIG 1-800-553-4344 "It's the Law" CLARK COUNTY UTILITIES COORDINATING COUNCIL

DESIGN & ENGINEERING DIVISION
NE 20TH AVE/HGWY 99 REALIG.
CLARK COUNTY
WEST LONGITUDINAL WEB ELEVATIONS SPANS 1 & 4

STATE OF WASHINGTON
JAMES A. HASSEN
26820
REGISTERED PROFESSIONAL ENGINEER
2/19/04
EXPIRES 12/10/2005

otak Incorporated
105 W. Evergreen Blvd., Suite 300
Vancouver, WA 98660-3123
Phone: (360) 737-4613
FAX: (360) 737-9651

kpff Consulting Engineers
111 SW 5th Avenue
Suite 2500
Portland, Oregon 97204
503-227-3251

proud past, promising future
CLARK COUNTY
WASHINGTON

PLOTTED DATE & TIME	UPDATED BY	PLOT SCALE	'PCP' FILE	PLOT VIEW
		TO FIT		PLOT

JOB #	JOB NAME	FILE PATH & NAME
99680	N.E. HIGHWAY 99	D:\2-PROJECTS\99680\99680-S54.DWG
XREFS: X99680,		

Fed. Aid No.
STPF-4253(010)

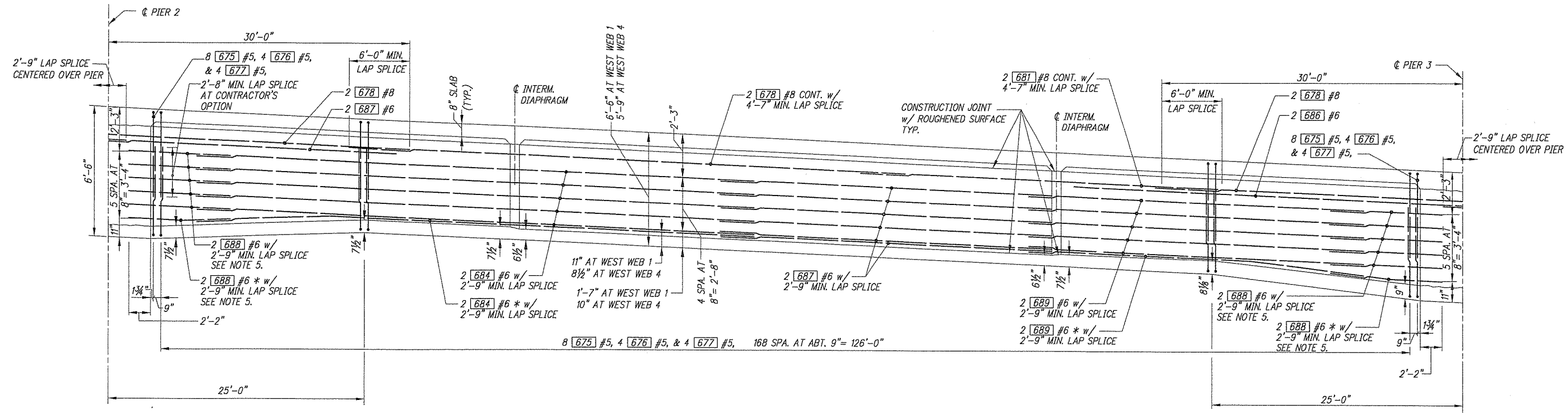

WEST LONGITUDINAL WEB ELEVATION – SPAN 2

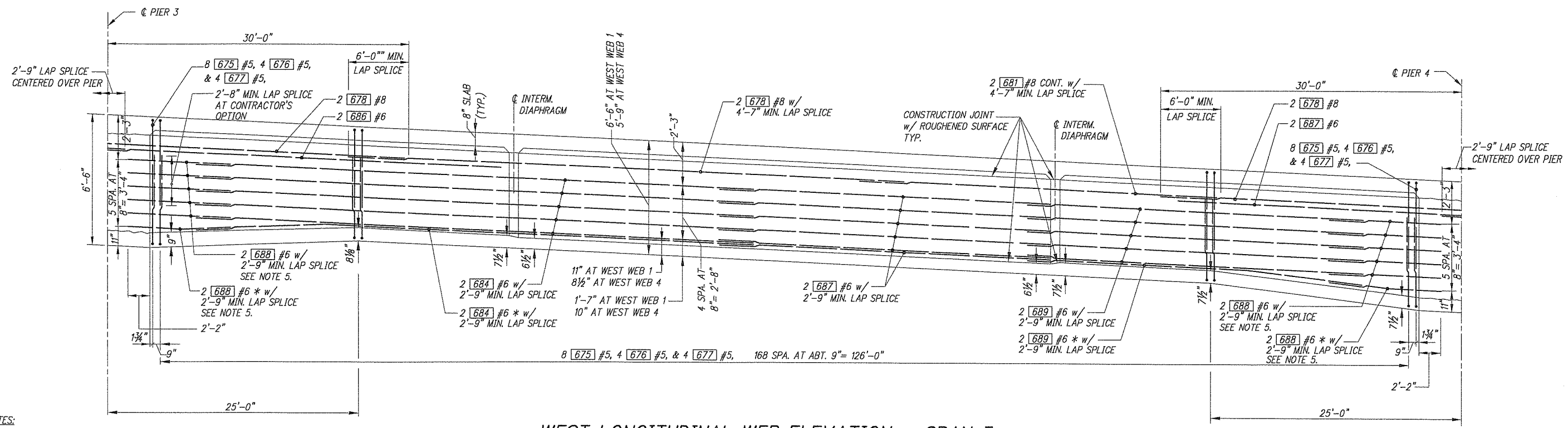

WEST LONGITUDINAL WEB ELEVATION – SPAN 3

NOTES:

1. TOP DECK SLAB, BOTTOM DECK SLAB, CROSS BEAM, AND DIAPHRAGM REBAR NOT SHOWN FOR CLARITY.
2. PLACE STIRRUPS VERTICALLY.
3. BRIDGE CURVE NOT SHOWN FOR CLARITY.
4. * FIELD BEND REINFORCEMENT BAR AS REQ'D. TO MATCH SLOPE OF BOTTOM SLAB.
5. FIELD BEND WHERE REQ'D TO AVOID CONFLICT WITH COLUMN REINF.

DESIGNED C. TOTTEN
DRAWN J. MILKES
CRP 392922
HOR. N/A
VERT. N/A
DATE FEB. 20, 2004
DWG. S53
SHEET 55 OF 78

CALL 48 HOURS BEFORE YOU DIG 1-800-553-4344 "It's the Law" CLARK COUNTY UTILITIES COORDINATING COUNCIL

DESIGN & ENGINEERING DIVISION
NE 20TH AVE/HGWY 99 REALIG.
CLARK COUNTY
WEST LONGITUDINAL WEB
ELEVATIONS SPANS 2 & 3

STATE OF WASHINGTON JAMES H. HASKEN 28603 REGISTERED PROFESSIONAL ENGINEER 2/17/04 EXPIRES 3/9/2005

105 W. Evergreen Blvd., Suite 300
Vancouver, WA 98660-3123
Phone: (360) 737-9613
FAX: (360) 737-9651
olak Incorporated
Consulting Engineers

111 SW 5th Avenue
Suite 2500
Portland, Oregon 97204
503-227-3251
kpff Consulting Engineers

proud past, promising future
CLARK COUNTY WASHINGTON

PLOTTED DATE & TIME	UPDATED BY	PLOT SCALE	'PCP' FILE	PLOT VIEW
		TO FIT		PLOT

FILE PATH & NAME	JOB NAME	JOB #
D:\2-PROJECTS\99680\99680-S54.DWG	N.E. HIGHWAY 99	99680

XREFS: X99680,

Fed. Aid No.
STPF-4253(010)

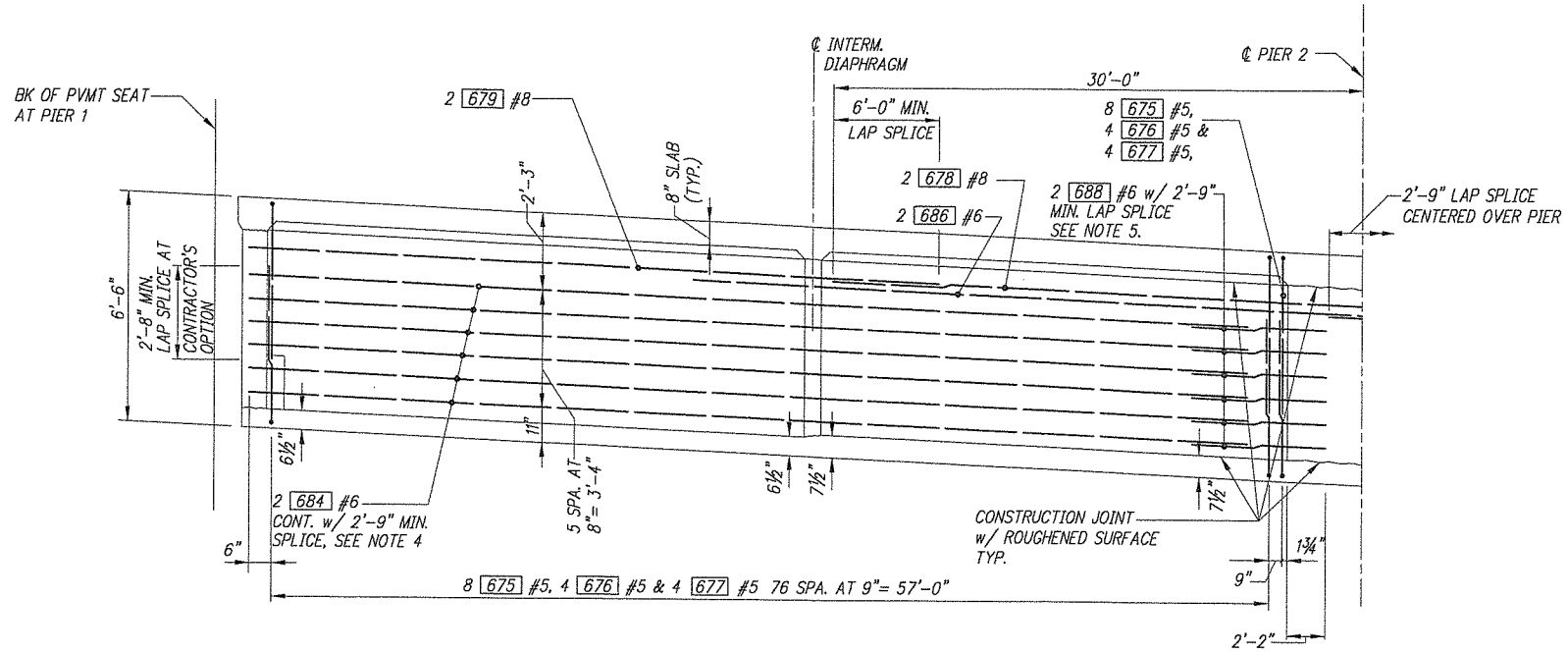

EAST LONGITUDINAL WEB ELEVATION – SPAN 1

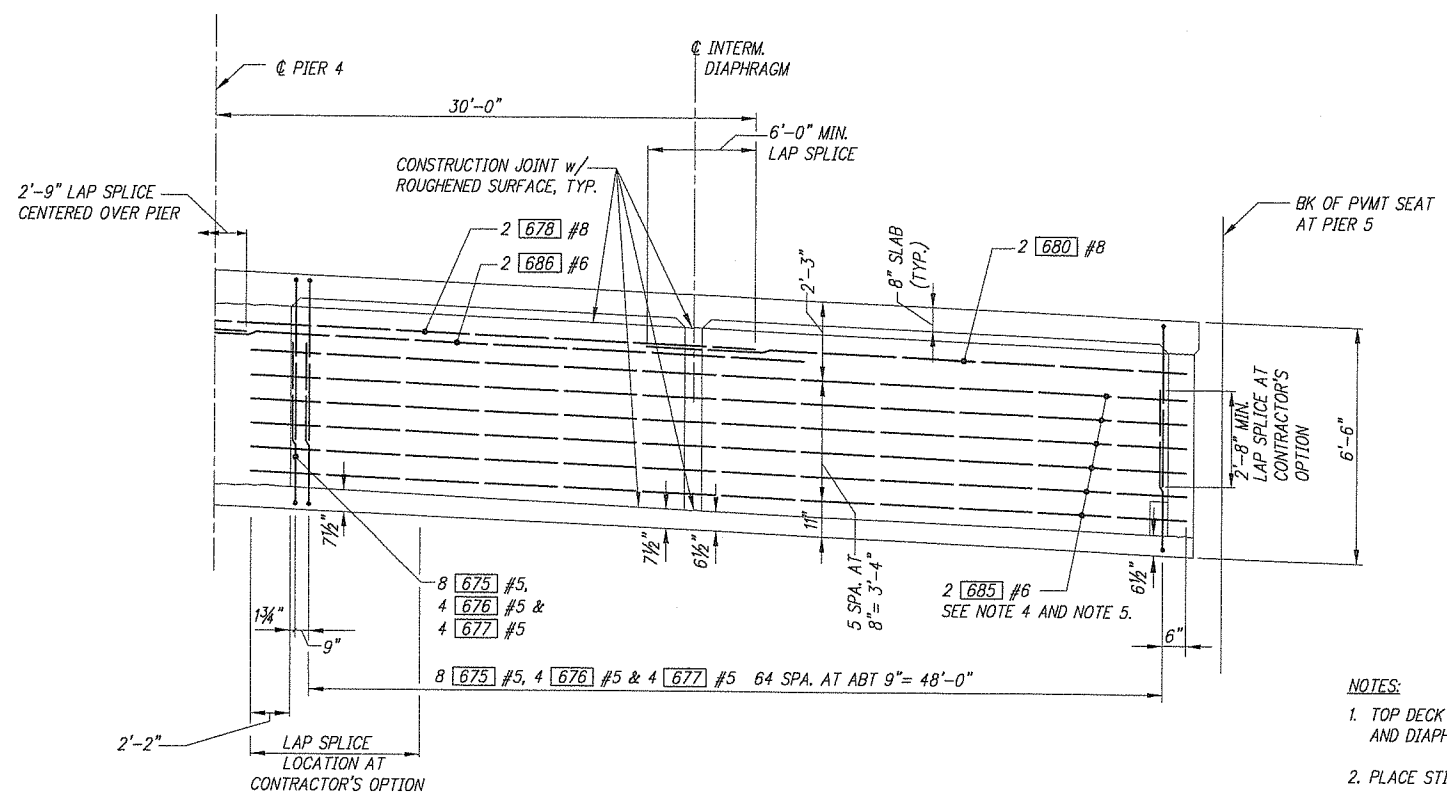

EAST LONGITUDINAL WEB ELEVATION – SPAN 4

NOTES:

1. TOP DECK SLAB, BOTTOM DECK SLAB, CROSS BEAM, AND DIAPHRAGM REBAR NOT SHOWN FOR CLARITY.
2. PLACE STIRRUPS VERTICALLY.
3. BRIDGE CURVE NOT SHOWN FOR CLARITY.
4. FIELD CUT REINFORCEMENT BAR AS REQUIRED.
5. FIELD BEND WHERE REQ'D TO AVOID CONFLICT WITH COLUMN REINF.

DESIGNED C. TOTEN
DRAWN J. WILKES
CRP 39222
HOR. N/A
VERT. N/A
DATE FEB. 20, 2004
DWG: S54
SHEET 56 OF 78

CALL 48 HOURS BEFORE YOU DIG 1-800-553-4344 "It's the Law" CLARK COUNTY UTILITIES COORDINATING COUNCIL

DESIGN & ENGINEERING DIVISION
NE 20TH AVE/HGWY 99 REALIG.
CLARK COUNTY
EAST LONGITUDINAL WEB ELEVATIONS SPANS 1 & 4

STATE OF WASHINGTON JAMES T. HASSEN 22645 REGISTERED PROFESSIONAL ENGINEER
EXPIRES 2/10/2006

otak Incorporated
103 W. Evergreen Blvd., Suite 300
Vancouver, WA 98660-3123
Phone: (360) 737-8613
FAX: (360) 737-9661

kpff Consulting Engineers
111 SW 5th Avenue
Suite 2500
Portland, Oregon 97204
503-227-3251

proud past, promising future
CLARK COUNTY WASHINGTON

PLOTTED DATE & TIME	UPDATED BY	PLOT SCALE	'PQP' FILE	PLOT VIEW
		TO FIT		PLOT

FILE PATH & NAME: D:\2-PROJECTS\99680\99680-S54.DWG

JOB #	JOB NAME
99680	N.E. HIGHWAY 99

XREFS: X99680,

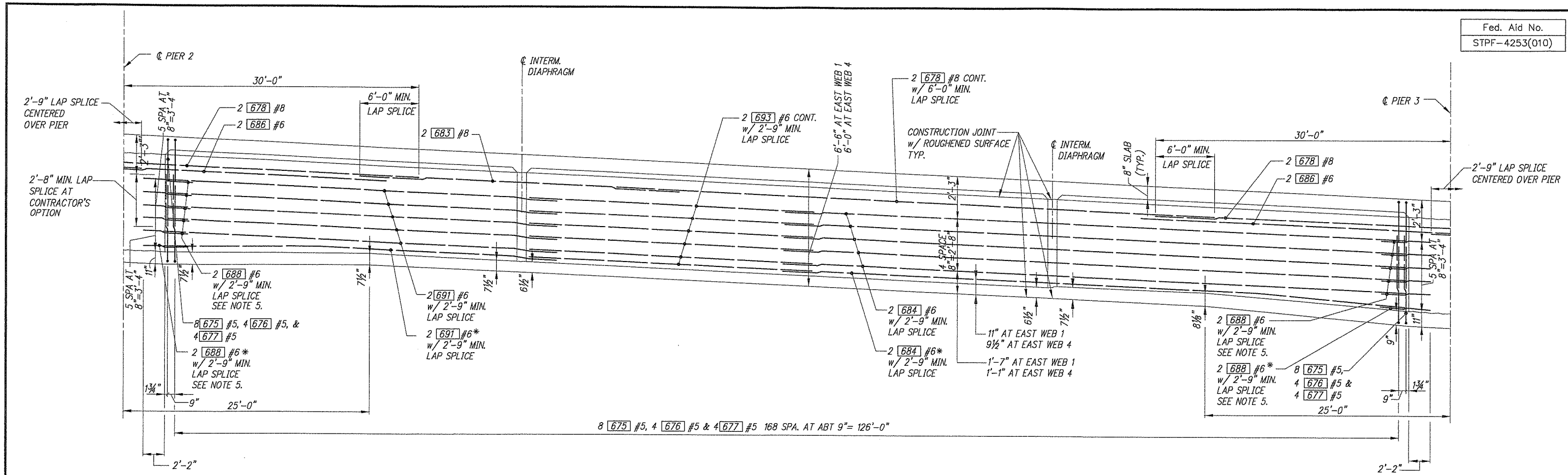

EAST LONGITUDINAL WEB ELEVATION – SPAN 2

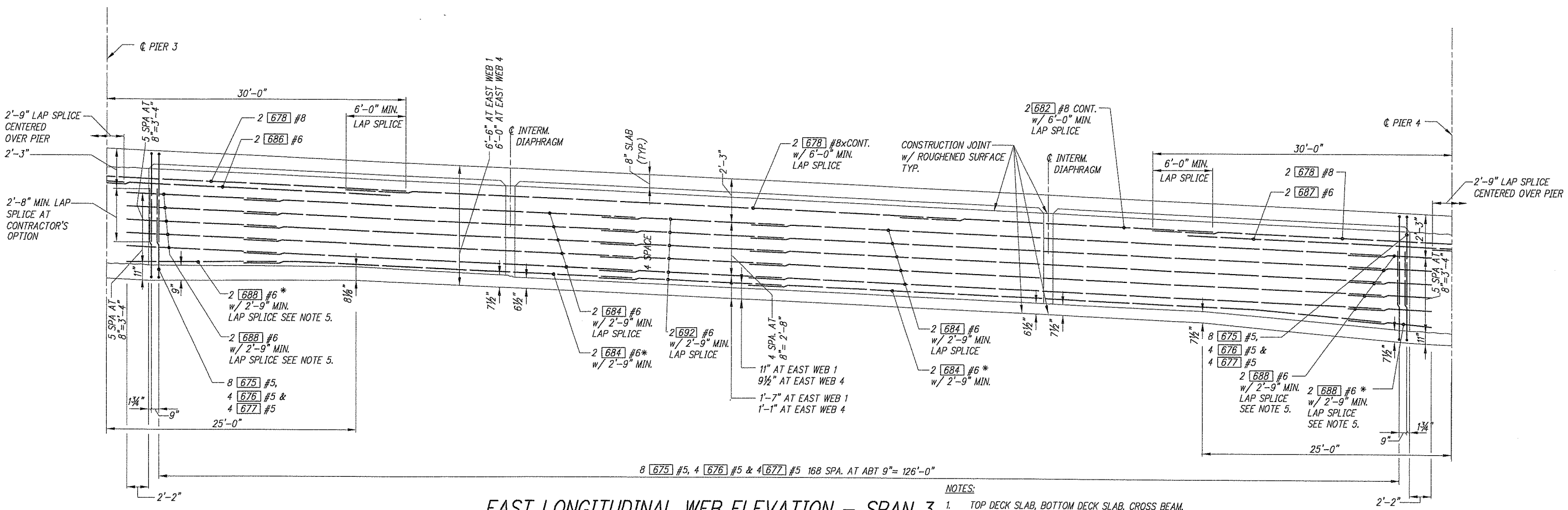

EAST LONGITUDINAL WEB ELEVATION – SPAN 3

NOTES:

1. TOP DECK SLAB, BOTTOM DECK SLAB, CROSS BEAM, AND DIAPHRAGM REBAR NOT SHOWN FOR CLARITY.
2. PLACE STIRRUPS VERTICALLY.
3. BRIDGE CURVE NOT SHOWN FOR CLARITY.
4. * FIELD BEND REINFORCEMENT BAR AS REQ'D. TO MATCH SLOPE OF BOTTOM SLAB
5. FIELD BEND WHERE REQ'D TO AVOID CONFLICT WITH COLUMN REINF.

Fed. Aid No.
STPF-4253(010)

DESIGNED C. TOTTEN
DRAWN J. WILKES
CRP 39922
HOR. N/A
VERT. N/A
DATE FEB. 20, 2004
DWG: S55
SHEET 57 OF 78

CALL 48 HOURS BEFORE YOU DIG 1-800-553-4344 "It's the Law" CLARK COUNTY UTILITIES COORDINATION COUNCIL

DESIGN & ENGINEERING DIVISION
NE 20TH AVE/HGWY 99 REALIG.
CLARK COUNTY
EAST LONGITUDINAL WEB ELEVATIONS SPANS 2 & 3

STATE OF WASHINGTON 22826 REGISTERED PROFESSIONAL ENGINEER
2/19/04
REVISED 2/19/2004

105 W. Evergreen Blvd., Suite 300
Vancouver, WA 98660-3123
Phone: (360) 737-4453
FAX: (360) 737-9651
Incorporated

111 SW 5th Avenue
Suite 2500
Portland, Oregon 97204
503-227-3251
kpff Consulting Engineers

proud past, promising future
CLARK COUNTY WASHINGTON

PLOTTED DATE & TIME	UPDATED BY	PLOT SCALE	"PCP" FILE	PLOT VIEW
		TO FIT		PLOT

JOB #	JOB NAME	FILE PATH & NAME
99680	N.E. HIGHWAY 99	D:\2-PROJECTS\99680\99680-S54.DWG

XREFS: X99680,

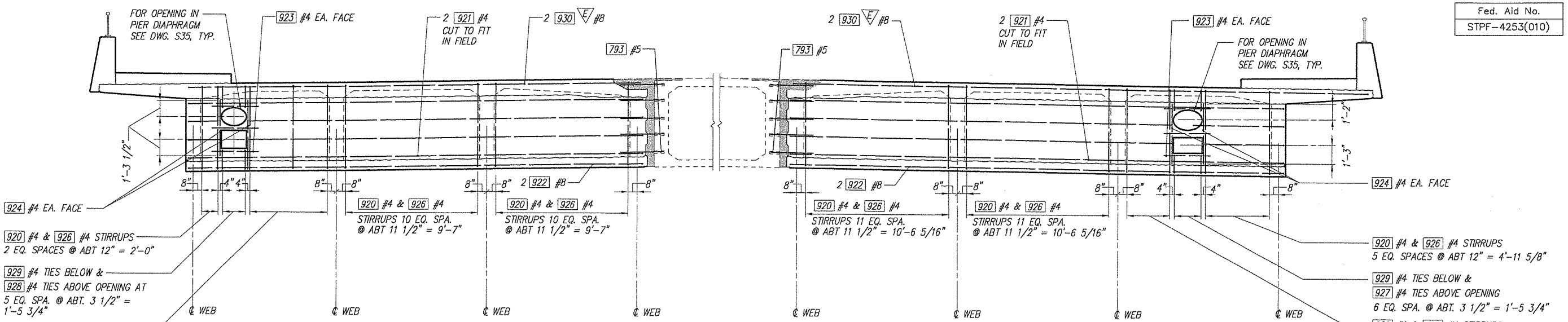

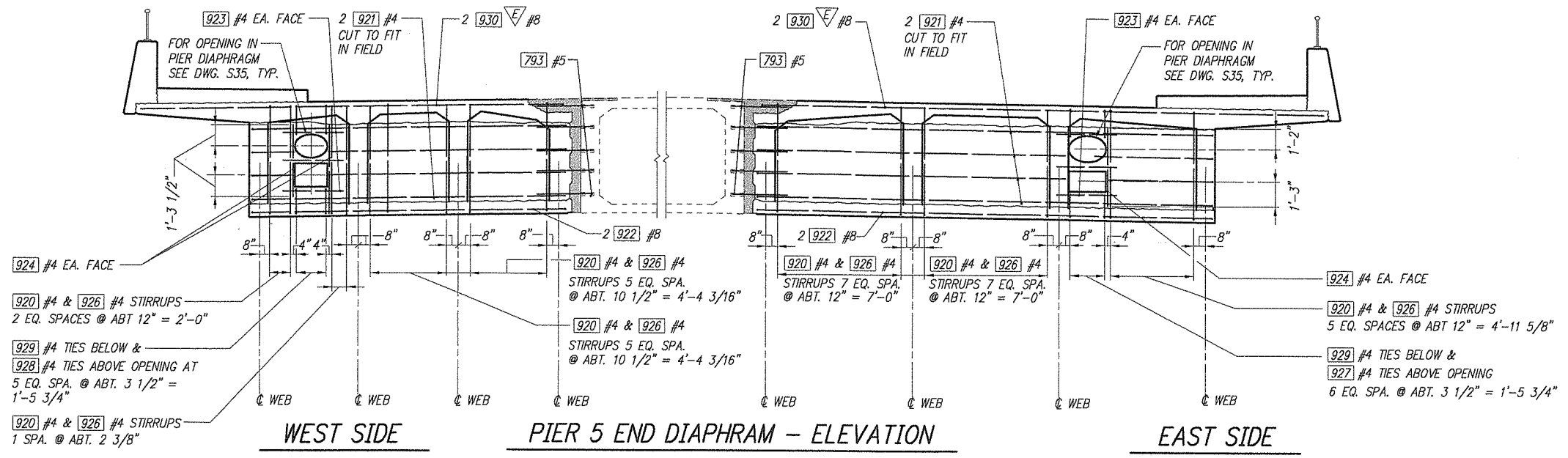

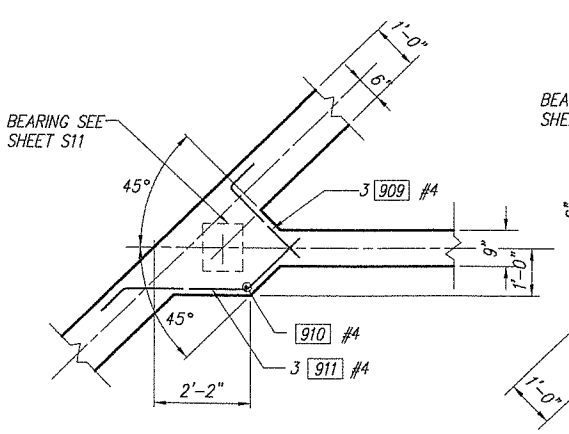

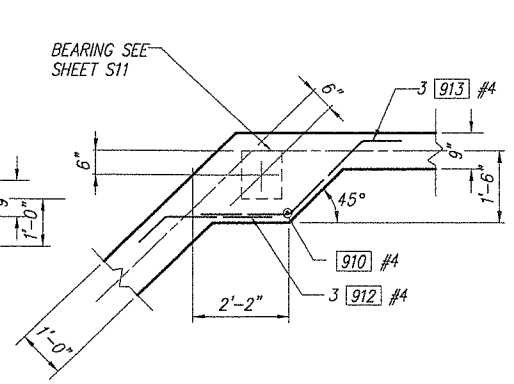

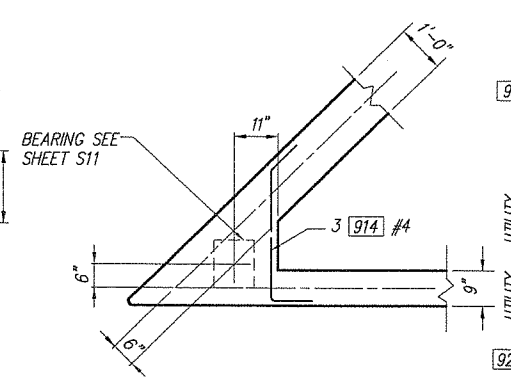

WEB AT END DIAPHRAGM

D / S37

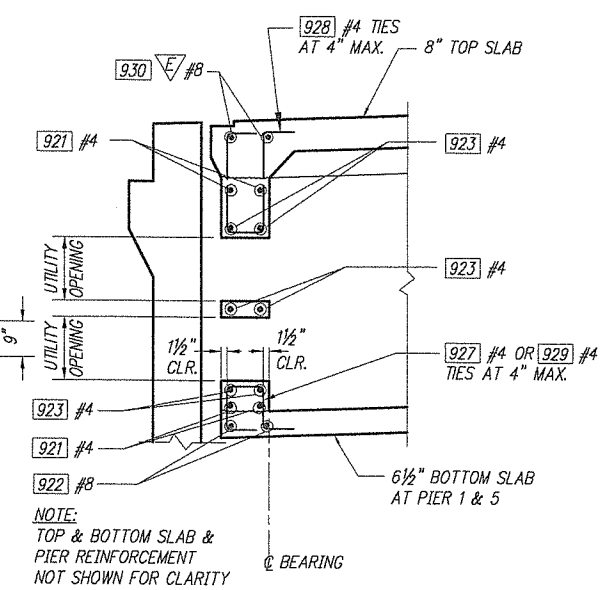

TYPICAL END DIAPHRAGM SECTION AT UTILITY OPENINGS

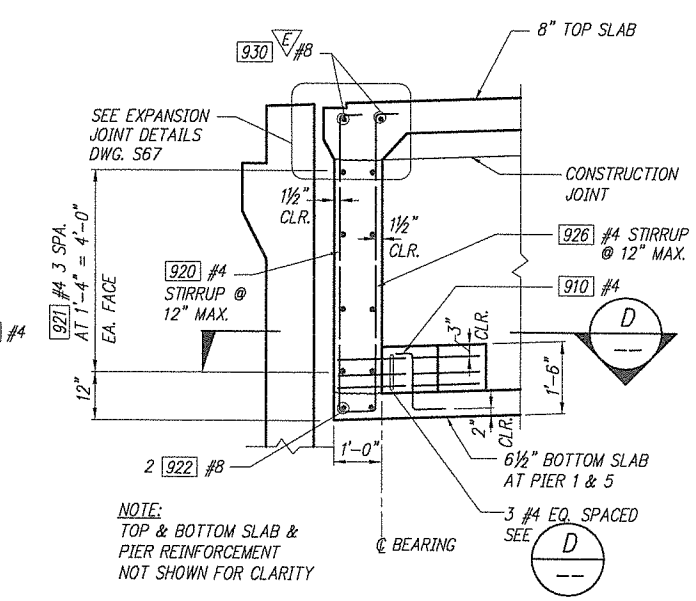

TYP. SECTION AT END DIAPH.

Fed. Aid No.
STPF-4253(010)

DESIGNED C. TOTTEN
DRAWN J. WILKES
CRP 392922
HOR. N/A
VERT. N/A
DATE FEB. 20, 2004
DWG: S56
SHEET 58 OF 78

CALL 48 HOURS BEFORE YOU DIG 1-800-553-4344 "It's the Law" CLARK COUNTY UTILITIES COORDINATING COUNCIL

DESIGN & ENGINEERING DIVISION

NE 20TH AVE/HGWY 99 REALIG.
CLARK COUNTY
DIAPHRAGM REINFORCING AND DETAILS I

STATE OF WASHINGTON JAMES A. WILKINS 26825 PROFESSIONAL ENGINEER 2/20/04 EXPIRES 2/10/2005

105 W. Evergreen Blvd., Suite 300
Vancouver, WA 98660-3123
Phone: (360) 737-8613
FAX: (360) 737-9601
otak Incorporated

kpff Consulting Engineers
111 SW 5th Avenue
Suite 2500
Portland, Oregon 97204
503-227-3251

proud past, promising future

CLARK COUNTY WASHINGTON

PLOTTED DATE & TIME	UPDATED BY	PLOT SCALE	'PCP' FILE	PLOT VIEW
JUN. 29, 2001 3:44:36 PM	ALINAE	1:1 (1:2)		PLOT

FILE PATH & NAME: V:\BRIDGE H-P\N.E. HIGHWAY 99 (99406)\DESIGN\99680-S56.DWG

JOB #	JOB NAME
99680	N.E. 20 th AVE HIGHWAY 99

XREFS: X99680,

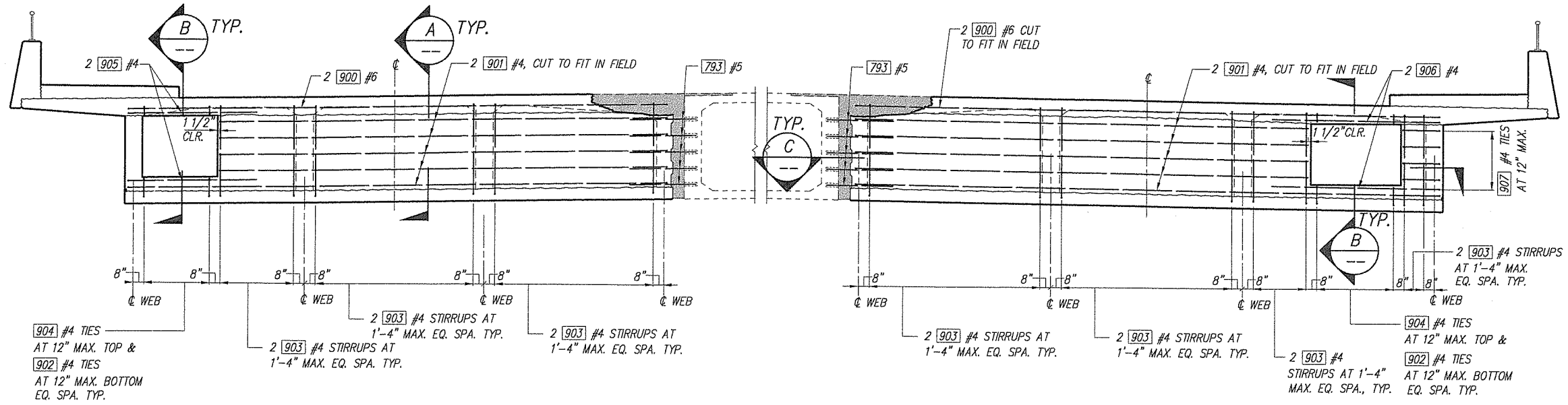

WEST SIDE

EAST SIDE

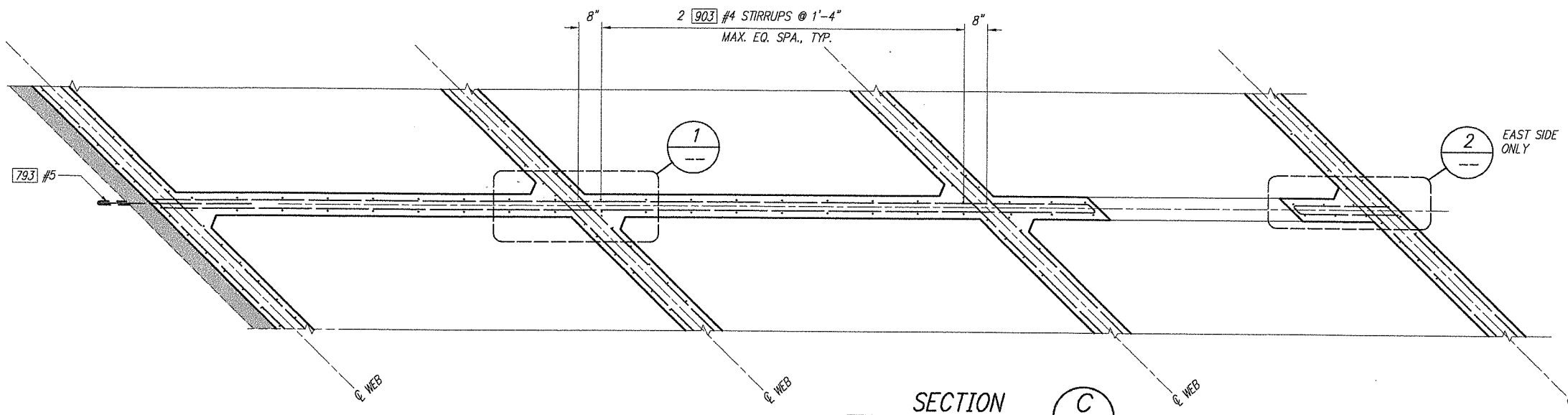

SECTION C

EAST SIDE DIAPHRAM SHOWN, WEST SIDE SIMILAR

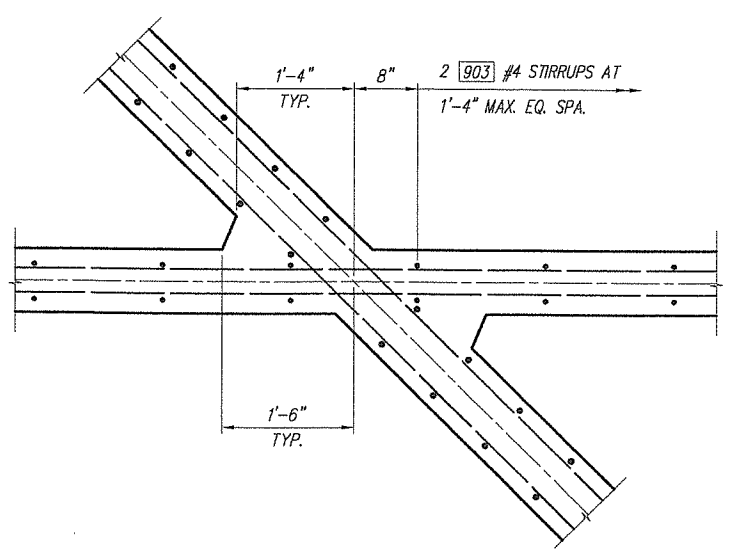

DETAIL 1

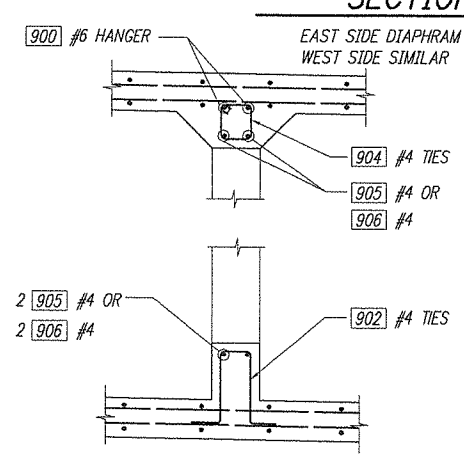

SECTION B

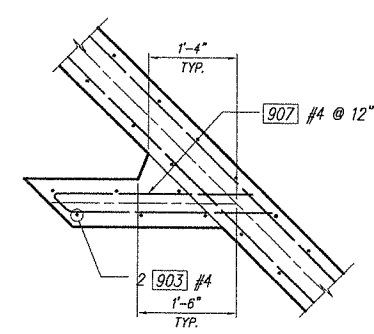

DETAIL 2

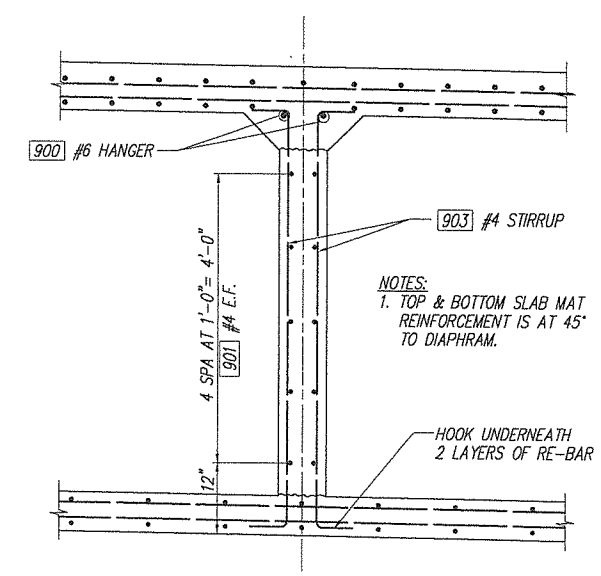

NOTES:
1. TOP & BOTTOM SLAB MAT REINFORCEMENT IS AT 45° TO DIAPHRAM.

TYP. SECTION AT INTERMEDIATE DIAPHRAGM A

Fed. Aid No.
STPF-4253(010)

DESIGNED C. TOTTEN
DRAWN J. WILKES
CRP 39922
HOR. N/A
VERT. N/A
DATE FEB. 20, 2004
DWG: S57
SHEET 59 OF 78

CALL 48 HOURS BEFORE YOU DIG 1-800-553-4344 "It's the Law" CLARK COUNTY UTILITIES COORDINATING COUNCIL

DESIGN & ENGINEERING DIVISION

NE 20TH AVE/HGWY 99 REALIG.
CLARK COUNTY
DIAPHRAGM REINFORCING AND DETAILS II

STATE OF WASHINGTON JAMES H. HASLAM 19355 REGISTERED PROFESSIONAL ENGINEER
2/17/04
REVISED 2/19/2004

otak Incorporated
105 W. Evergreen Blvd., Suite 300
Vancouver, WA 98660-3128
Phone: (360) 737-8013
Fax: (360) 737-9601

kpff Consulting Engineers
111 SW 5th Avenue
Suite 2500
Portland, Oregon 97204
503-227-3251

proud past, promising future

CLARK COUNTY WASHINGTON

JOB #	JOB NAME	FILE PATH & NAME	PLOTTED DATE & TIME	UPDATED BY	PLOT SCALE	'PCP' FILE	PLOT VIEW
99680	N.E. 20 th AVE HIGHWAY 99	V:\BRIDGE H-P\N.E. HIGHWAY 99 (99406)\DESIGN\99680-S57.DWG	JUN. 29, 2001 3:44:36 PM	ALINAE	1:1 (1:2)		PLOT

XREFS: X99680,

JOB #	JOB NAME	FILE PATH & NAME	PLOTTED DATE & TIME	UPDATED BY	PLOT SCALE	'PCP' FILE	PLOT VIEW
99680	N.E. 20 th AVE HIGHWAY 99	V:\BRIDGE H-P\N.E. HIGHWAY 99 (99406)\DESIGN\99680-S66.DWG	JUN. 29, 2001 11:41:27 AM	ALINAE	1:1		PLOT

XREFS: X99680,

Fed. Aid No.
STPF-4253(010)

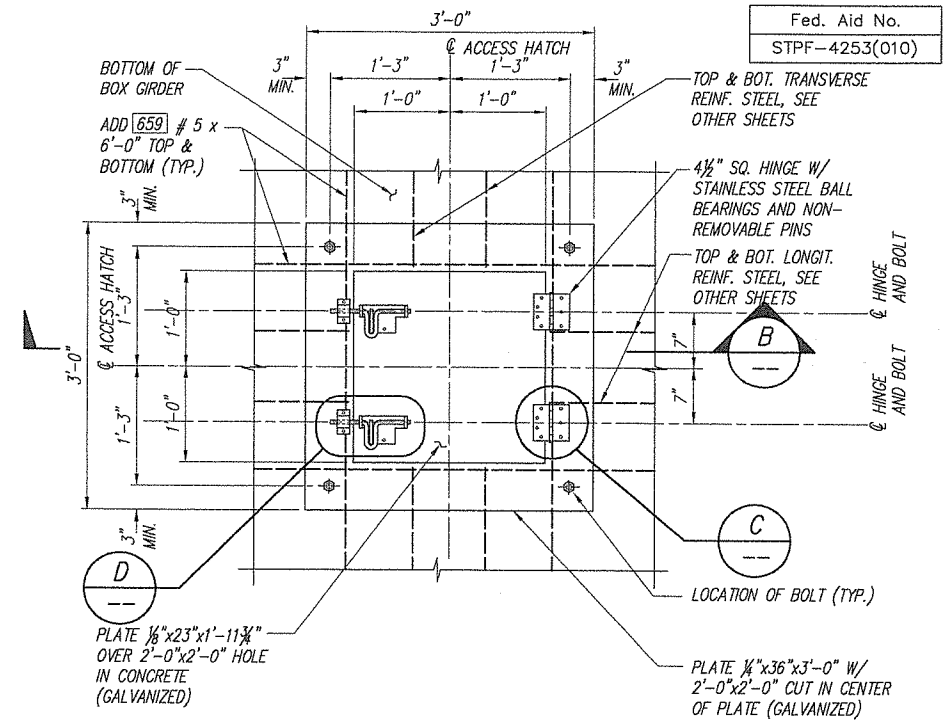

ACCESS HATCH DETAIL

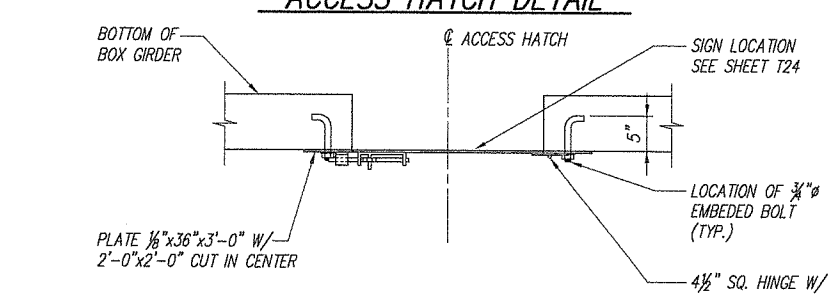

SECTION – BOTTOM SLAB ACCESS HATCH DETAIL (B / S37)

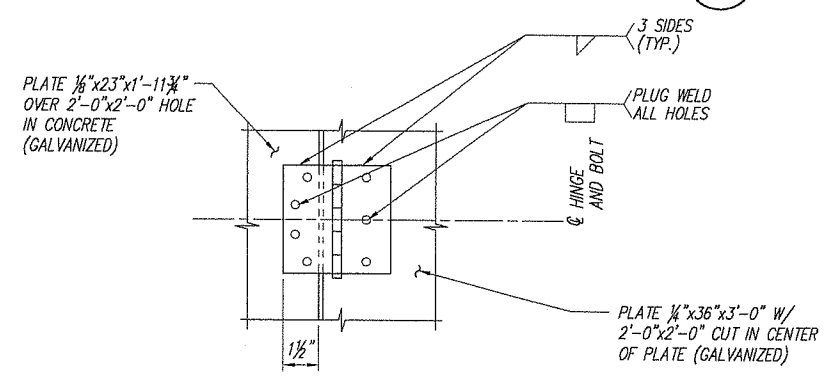

DETAIL (C / S37)

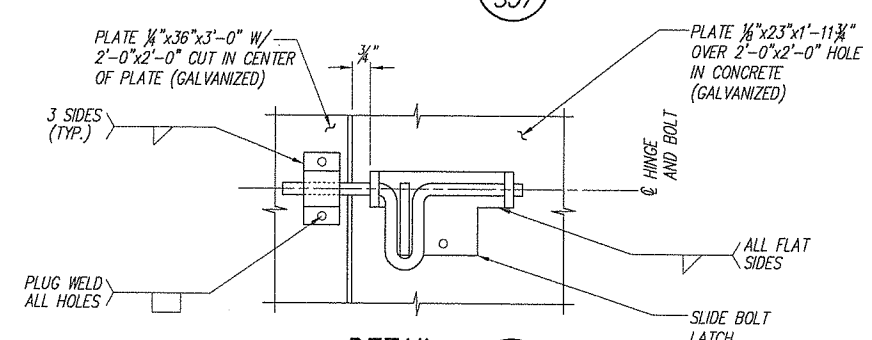

DETAIL (D / S37)

DESIGNED C. TOITEN
DRAWN J. HUKES
CRP. 393922
HOR. N/A
VERT. N/A
DATE FEB. 20, 2004
DWG. S58
SHEET 60 OF 78

CALL 48 HOURS BEFORE YOU DIG 1-800-553-4344 "It's the Law" CLARK COUNTY UTILITIES COORDINATING COUNCIL

DESIGN & ENGINEERING DIVISION
NE 20TH AVE/HGWY 99 REALIG.
CLARK COUNTY
UTILITY DETAILS

STATE OF WASHINGTON JAMES A. HUNTINGTON 22800 REGISTERED PROFESSIONAL ENGINEER
EXPIRES 2/10/2006

otak Incorporated
105 W. Evergreen Blvd., Suite 300
Vancouver, WA 98660-3123
Phone: (360) 737-8693
FAX: (360) 737-9851

kpff Consulting Engineers
111 SW 5th Avenue
Suite 2500
Portland, Oregon 97204
503-227-3251

proud past, promising future
CLARK COUNTY WASHINGTON

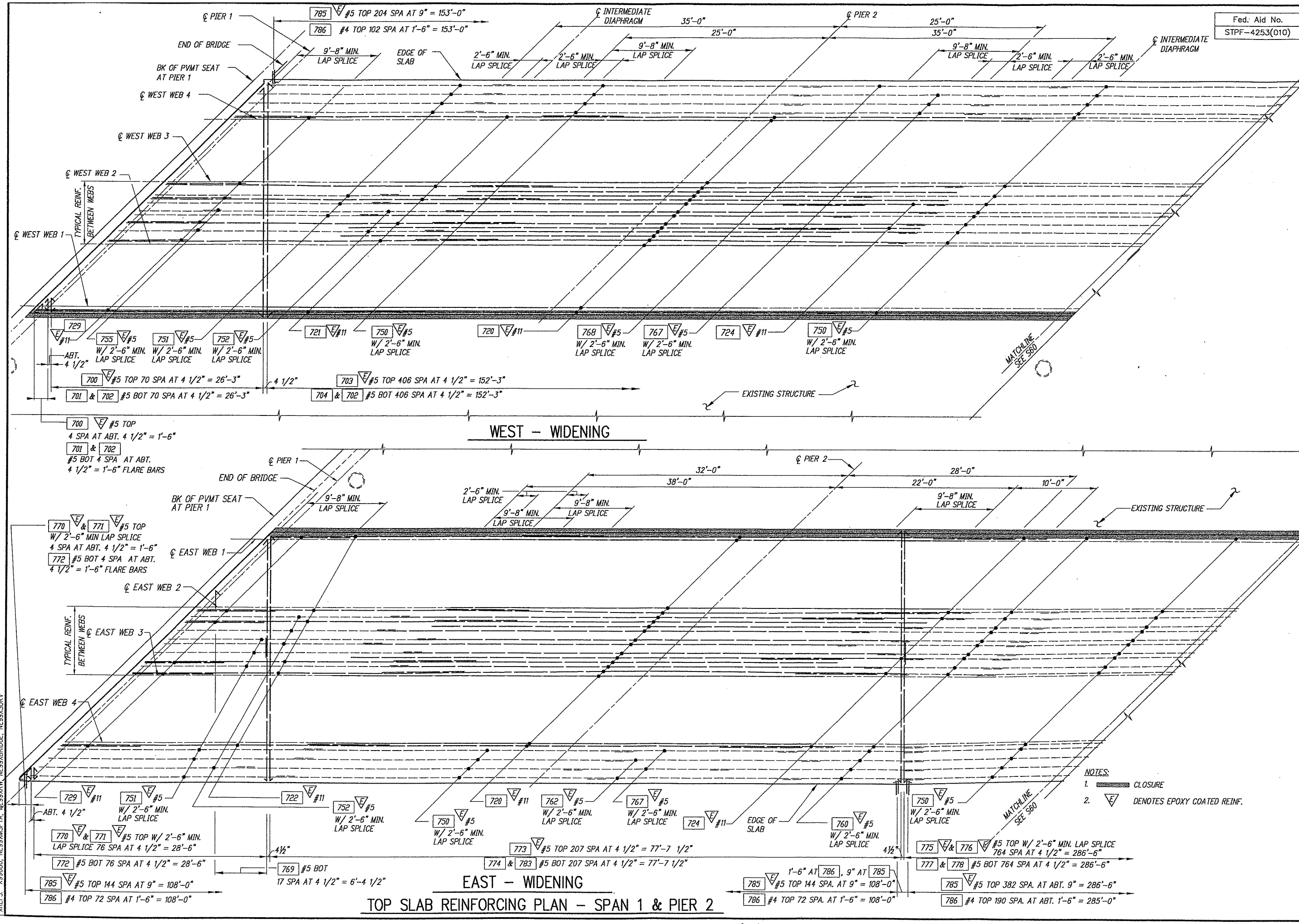

TOP SLAB REINFORCING PLAN - SPAN 1 & PIER 2

Fed. Aid No.
STPF-4253(010)

DESIGNED C. TOTTEN
DRAWN J. NILKES
CRP 392822
HOR. N/A
VERT. N/A
DATE FEB. 20, 2004
DWG. S59
SHEET 61 OF 78

CALL 48 HOURS BEFORE YOU DIG 1-800-553-4344 "It's the Law" CLARK COUNTY UTILITIES COORDINATING COUNCIL

DESIGN & ENGINEERING DIVISION
NE 20TH AVE/HGWY 99 REALIG.
CLARK COUNTY
TOP SLAB REINFORCING
SPAN 1 & PIER 2

STATE OF WASHINGTON
JAMES H. HASKEN
23935
REGISTERED PROFESSIONAL ENGINEER
EXPIRES 12/8/2006

otak Incorporated
103 N. Evergreen Blvd., Suite 500
Vancouver, WA 98660-3123
Phone: (360) 737-9613
FAX: (360) 737-9631

kpff Consulting Engineers
111 SW 5th Avenue
Suite 2500
Portland, Oregon 97204
503-227-3251

proud past, promising future
CLARK COUNTY
WASHINGTON

PLOT VIEW
"POP" FILE
1=1 PLOT SCALE
UPDATED BY
PLOTTED DATE & TIME
FILE PATH & NAME D:\2-PROJECTS\99680\99680-S59.DWG
JOB NAME N.E. HIGHWAY 99
JOB # 99680
XREFS: X99680, NE99XMSP1A, NE99XRW, NE99XBRIDGE, NE99XSURV

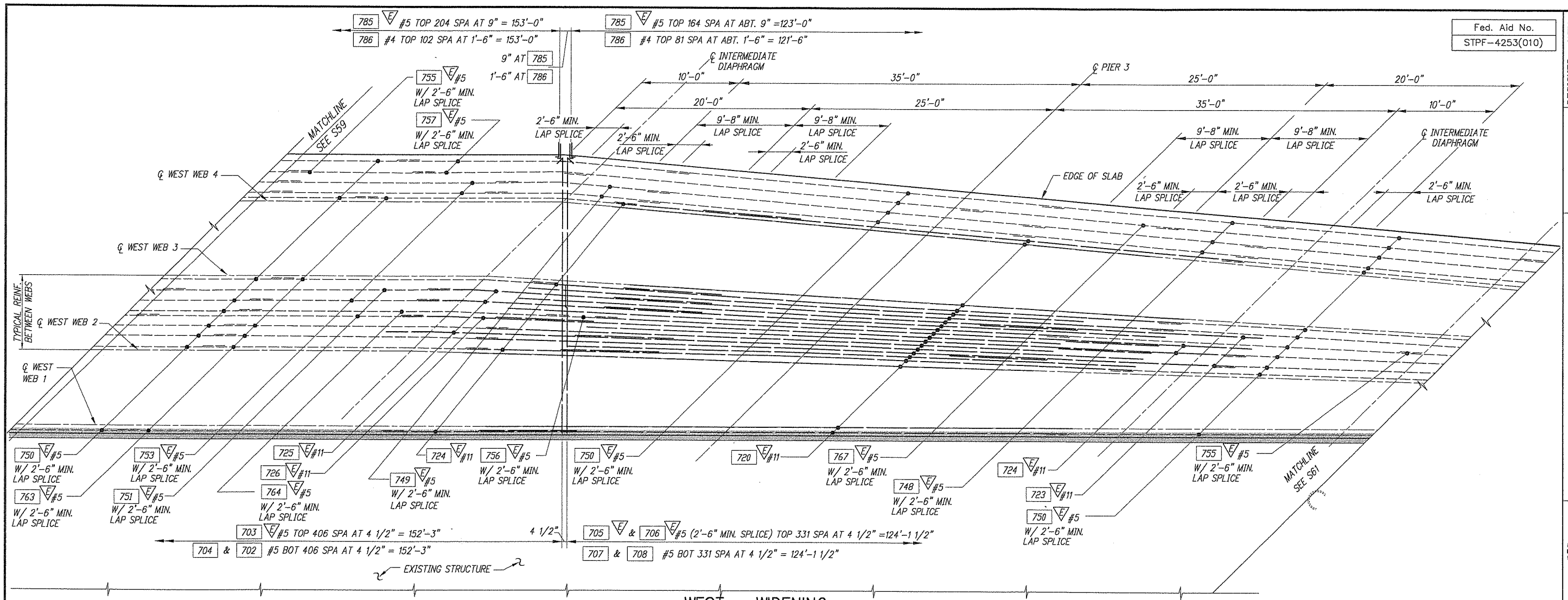

WEST – WIDENING

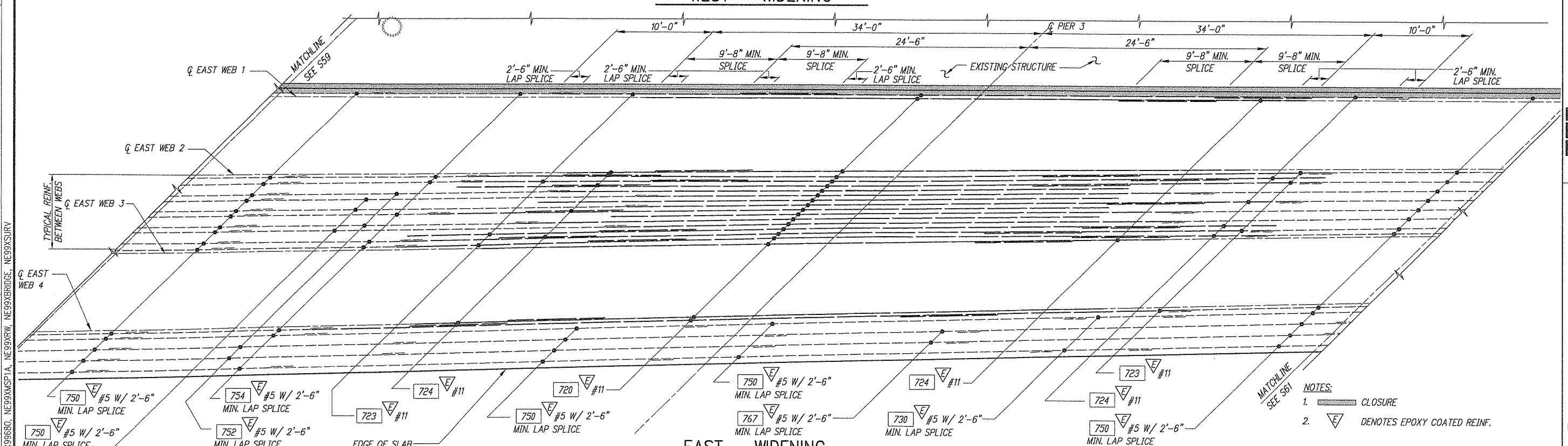

NOTES:
1. CLOSURE
2. DENOTES EPOXY COATED REINF.

EAST – WIDENING

TOP SLAB REINFORCING PLAN – PIER 3

Fed. Aid No.
STPF-4253(010)

DESIGNED C. TOTTEN
DRAWN J. WILKES
CRP 392822
HOR. N/A
VERT. N/A
DATE FEB. 20, 2004
DWG: S60
SHEET 62 OF 78

CALL 48 HOURS BEFORE YOU DIG 1-800-553-4344 "It's the Law" CLARK COUNTY UTILITIES COORDINATING COUNCIL

DESIGN & ENGINEERING DIVISION

NE 20TH AVE/HGWY 99 REALIG.
CLARK COUNTY
TOP SLAB REINFORCING
PIER 3

STATE OF WASHINGTON — STEVEN L. KASLYEN — SUMMER — REGISTERED PROFESSIONAL ENGINEER
EXPIRES 7/19/2006

otak Incorporated
165 N. Arrowgram Blvd., Suite 500
Vancouver, WA 98660-3128
Phone: (360) 737-4813
Fax: (360) 737-9601

kpff Consulting Engineers
111 SW 5th Avenue
Suite 2500
Portland, Oregon 97204
503-227-3251

proud past, promising future
CLARK COUNTY WASHINGTON

PLOTTED DATE & TIME	UPDATED BY	PLOT SCALE	'PCP' FILE	PLOT VIEW
-	---	1=1	---	---

FILE PATH & NAME: D:\2-PROJECTS\99680\99680-S59.DWG

JOB NAME: N.E. HIGHWAY 99

JOB # 99680

XREFS: X99680, NE99XMSP1A, NE99XRW, NE99XBRIDGE, NE99XSURV

Fed. Aid No.
STPF-4253(010)

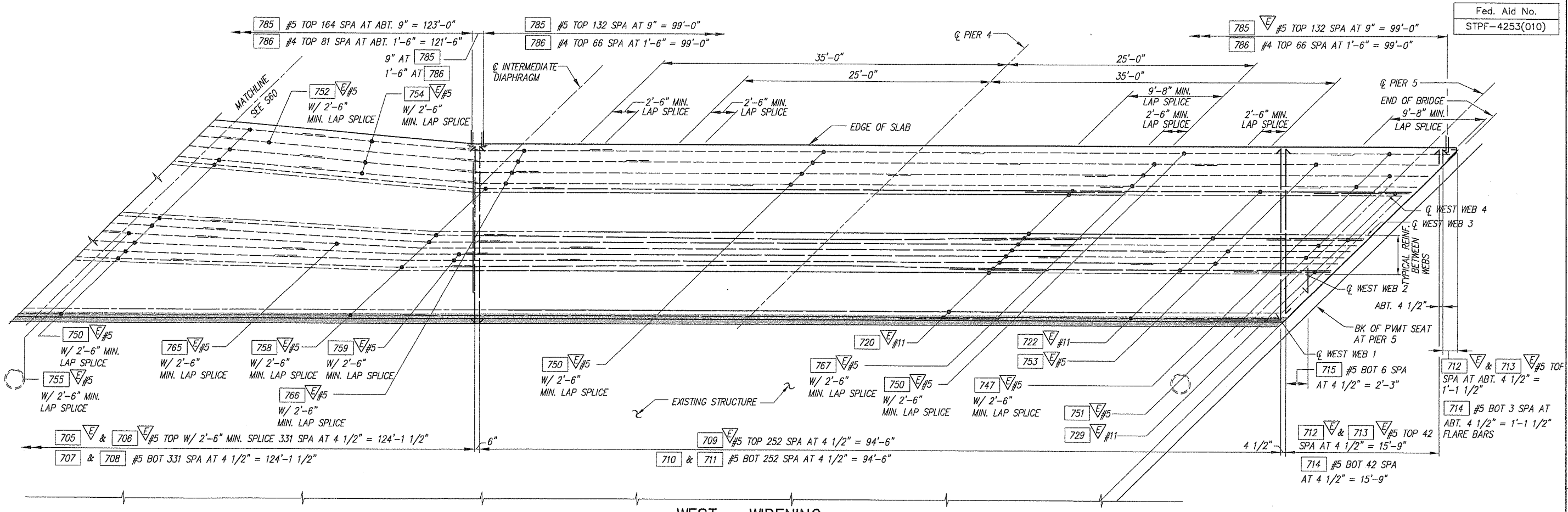

WEST – WIDENING

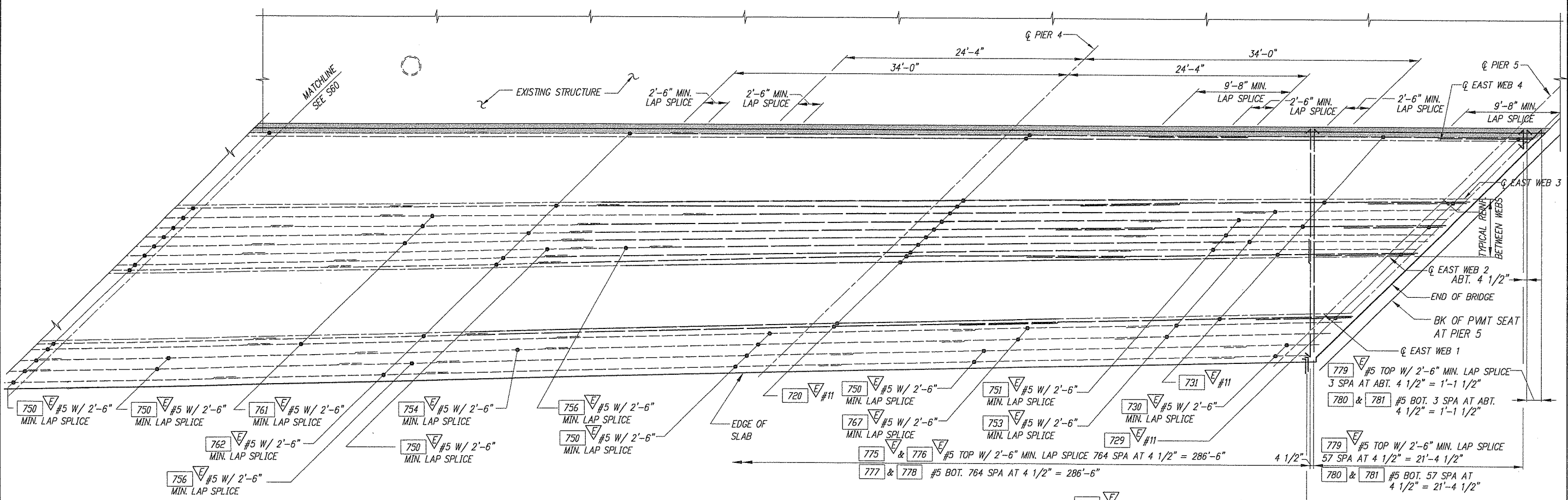

EAST – WIDENING

TOP SLAB REINFORCING PLAN – PIER 4 & SPAN 4

NOTES:
1. CLOSURE
2. E DENOTES EPOXY COATED REINF.

DESIGNED C. TOTTEN
DRAWN L. WILKES
CRP 392922
HOR. N/A
VERT. N/A
DATE FEB. 20, 2004
DWG: S61
SHEET 63 OF 78

CALL 48 HOURS BEFORE YOU DIG 1-800-553-4344 "It's the Law" CLARK COUNTY UTILITIES COORDINATING COUNCIL

DESIGN & ENGINEERING DIVISION
NE 20TH AVE/HGWY 99 REALIG.
CLARK COUNTY
TOP SLAB REINFORCING
PIER 4 & SPAN 4

EXPIRES 12/31/06

otak Incorporated
105 W. Evergreen Blvd., Suite 300, Vancouver, WA 98660-3123, Phone: (360) 737-4613, FAX: (360) 737-9501

kpff Consulting Engineers
111 SW 5th Avenue, Suite 2500, Portland, Oregon 97204, 503-227-3251

proud past, promising future
CLARK COUNTY WASHINGTON

PLOTTED DATE & TIME	UPDATED BY	PLOT SCALE	'PCP' FILE	PLOT VIEW
–	---	1=1	---	---

FILE PATH & NAME: D:\2-PROJECTS\99680\99680-S59.DWG

JOB NAME: N.E. HIGHWAY 99
JOB # 99680
XREFS: X99680, NE99XMSPTA, NE99XRW, NE99XBRIDGE, NE99XSURV

JOB #	JOB NAME	FILE PATH & NAME	PLOTTED DATE & TIME	UPDATED BY	PLOT SCALE	'PCP' FILE	PLOT VIEW
99680	N.E. 20 th AVE HIGHWAY 99	V:\BRIDGE H-P\N.E. HIGHWAY 99 (99406)\INCOMING\08-03-01\99680-S62.DWG	AUG. 04, 2001 2:00:18 PM	DIEMT	1:1 (1:2)		PLOT

XREFS: X99680,

Fed. Aid No.
STPF-4253(010)

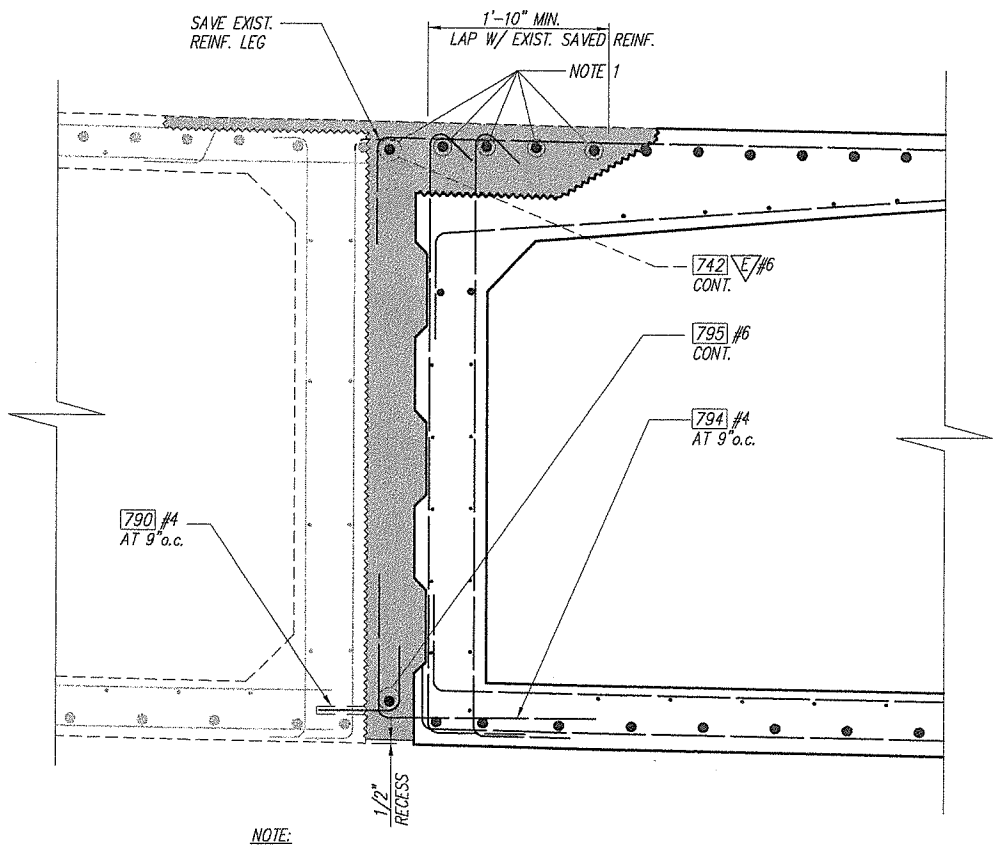

NOTE:

1. THE TOP FIVE LONGIT. ST. REINF. BARS WITHIN THE CLOSURE SHALL BE TIED IN FINAL LOCATION, AT THE TIME OF CLOSURE. SEE TOP SLAB REINFORCING PLANS.
2. (E) DENOTES EPOXY COATED REINF.

TYPICAL SPLICE

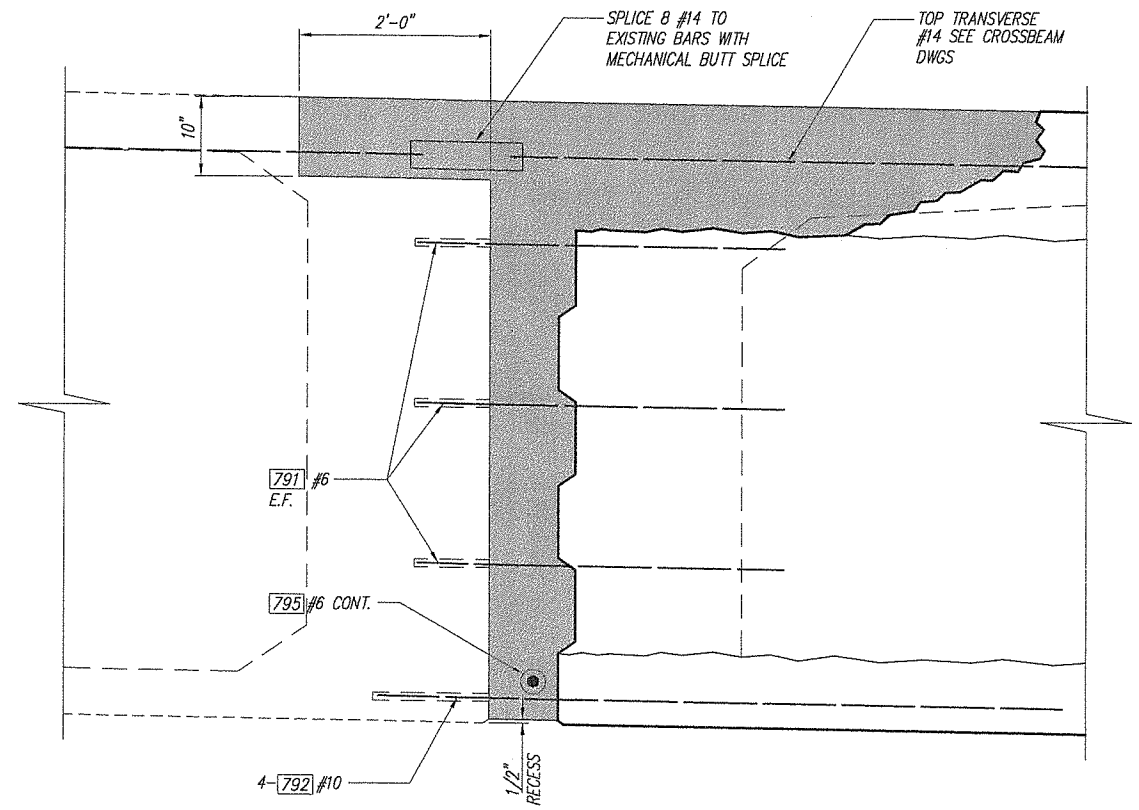

TYPICAL CROSSBEAM SPLICE

CROSSBEAM SPLICE
CONSTRUCTION SEQUENCE

1. REMOVE 2' WIDE AND 10" DEEP SECTION OF EXISTING CROSSBEAM CONCRETE AS SHOWN.
2. TRIM 3" OFF EXISTING BAR ENDS, AND CLEAN EXPOSED REINF.
3. TEST FOR COUPLER FIT.
4. INSTALL WIDENING REINF. BARS WITH 1/4" GAP TO EXISTING, ALIGN BARS. INSTALL COUPLER SLIDE BACK ON WIDENING BAR.
5. AT THE TIME OF CLOSURE CONNECT THE BARS.
6. MINIMUM OF 8 #14 BARS SHALL BE SPLICED PER CROSSBEAM. SPLICED BARS SHALL BE SYMMETRIC ABOUT CROSSBEAM CENTER LINE
7. ALL CROSSBEAM WIDENING #14 TOP BARS SHALL BE EXTENDED TO ALLOW 8 WITH THE BEST FIT TO BE SPLICED TO EXISTING.
8. CLOSURES SHALL BE STAGGERED TO MINIMIZE TRAFFIC CONTROL REQUIREMENTS. SEE SPECIAL PROVISIONS FOR LANE CLOSURE REQUIREMENTS.

NOTE:
SEE DWG. S08 FOR DRILLING DETAILS.

DESIGNED C. TOTTEN
DRAWN J. WILKES
CRP 392822
HOR. N/A
VERT. N/A
DATE FEB. 20, 2004
DWG: S62
SHEET 64 OF 78

CALL 48 HOURS BEFORE YOU DIG 1-800-553-4344 "It's the Law" CLARK COUNTY UTILITIES COORDINATING COUNCIL

DESIGN & ENGINEERING DIVISION
NE 20TH AVE/HGWY 99 REALIG.
CLARK COUNTY
TYICAL SPLICE

STATE OF WASHINGTON KEITH A. HASLAPEN 12147 REGISTERED PROFESSIONAL ENGINEER
5/19/04
EXPIRES 2/10/2005

otak Incorporated
105 W. Evergreen Blvd., Suite 300
Vancouver, WA 98660-3123
Phone: (360) 737-8513
FAX: (360) 737-9651

kpff Consulting Engineers
111 SW 5th Avenue
Suite 2500
Portland, Oregon 97204
503-227-3251

proud past, promising future
CLARK COUNTY
WASHINGTON

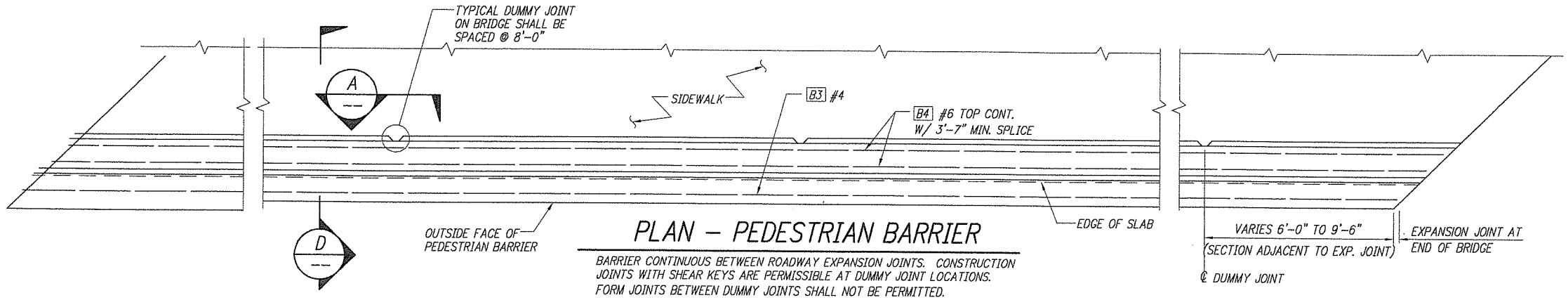

PLAN – PEDESTRIAN BARRIER

BARRIER CONTINUOUS BETWEEN ROADWAY EXPANSION JOINTS. CONSTRUCTION JOINTS WITH SHEAR KEYS ARE PERMISSIBLE AT DUMMY JOINT LOCATIONS. FORM JOINTS BETWEEN DUMMY JOINTS SHALL NOT BE PERMITTED.

FOR CONDUIT LAYOUT INFORMATION SEE SHEET S64.

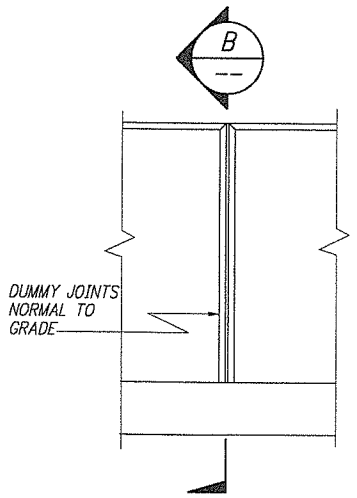

VIEW A

ALL CHAMFERS ¾". SEE FRACTURED FIN FINISH FOR APPLICABLE SURFACE FINISH.

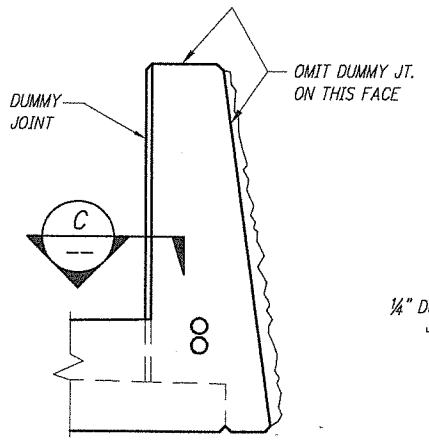

SECTION B

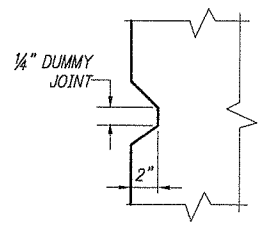

DUMMY JOINT DETAIL C

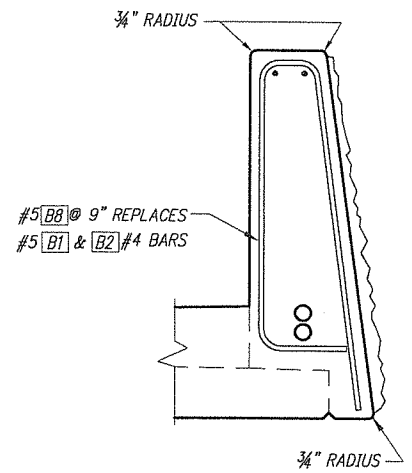

SLIPFORM ALTERNATE

FOR ADDITIONAL DETAILS SEE D

THE CONTRACTOR IS ADVISED THAT THE SLIPFORM CONSTRUCTION METHOD IS A PANTENTED PROPRIETARY PROCESS FOR BARRIERS WITH A FRACTURED FIN FINISH.

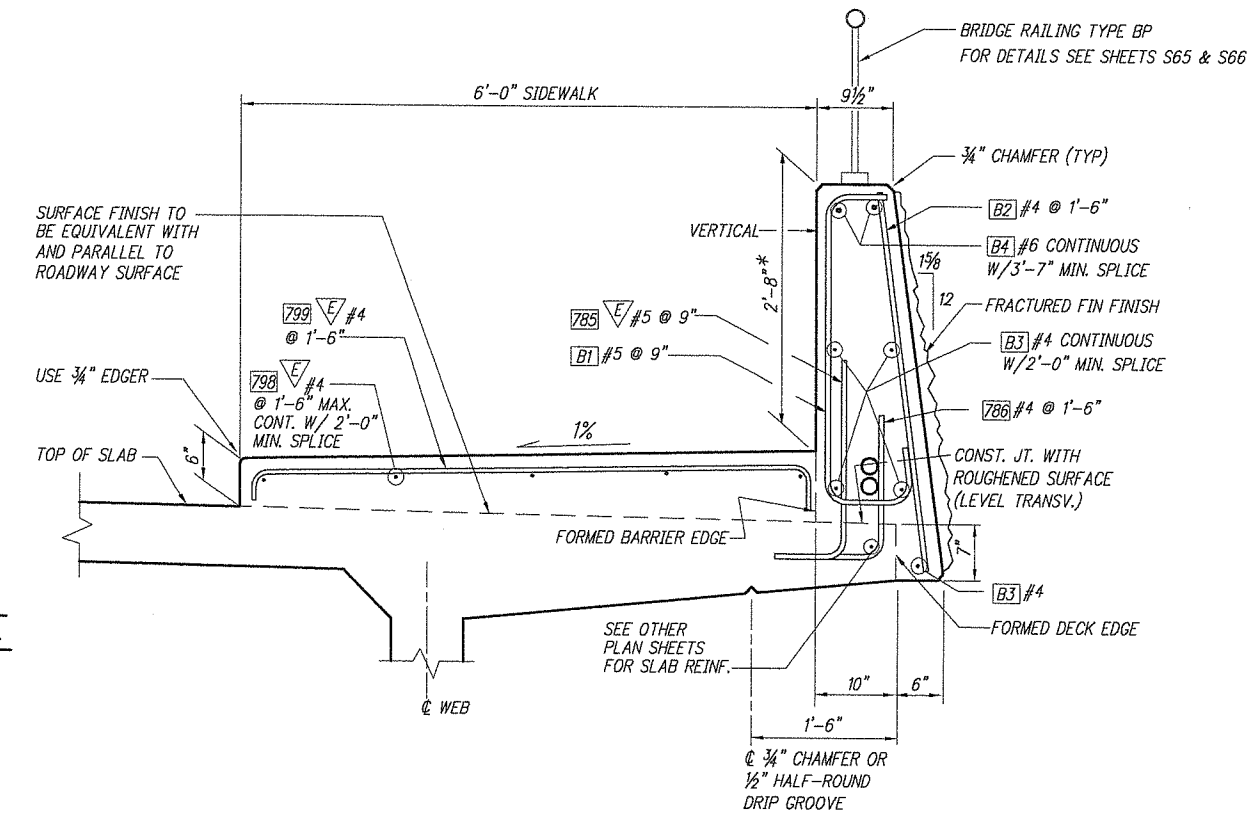

* MIN. HEIGHT. PEDESTRIAN BARRIER HEIGHT MAY VARY IF REQUIRED TO PROVIDE A SMOOTH PROFILE.

PEDESTRIAN BARRIER TYPICAL SECTION D

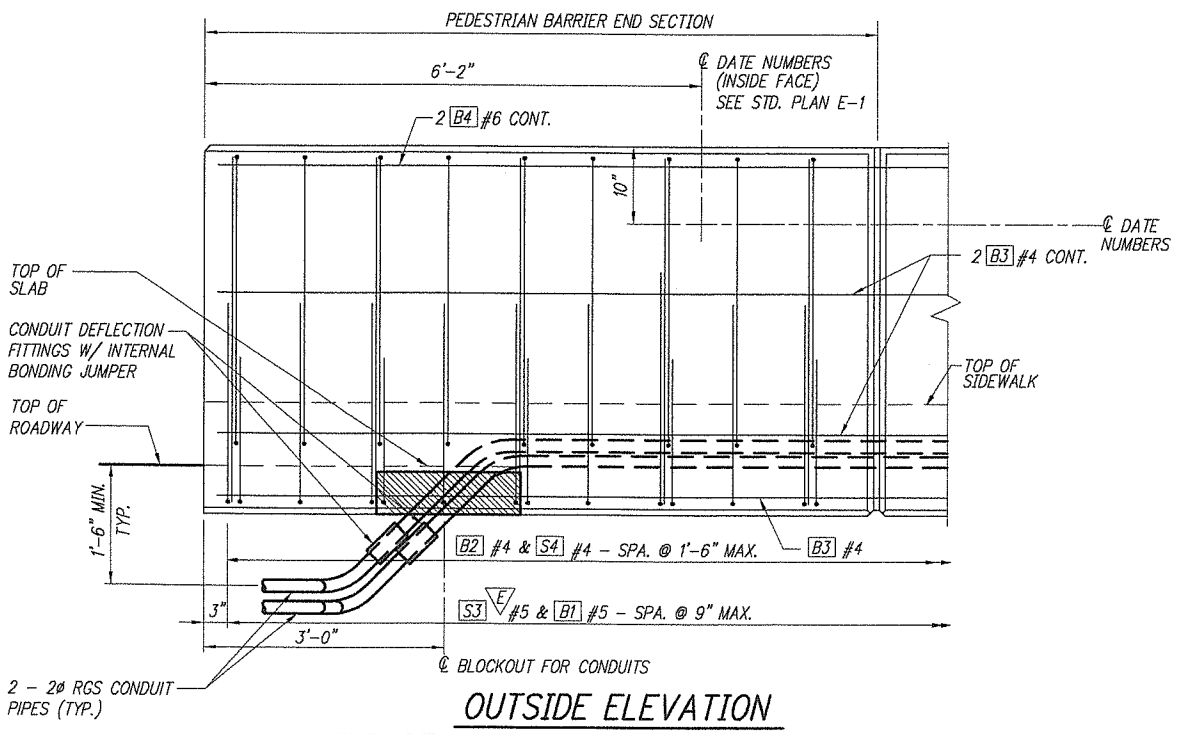

OUTSIDE ELEVATION END OF MODIFIED PEDESTRIAN BARRIER

BARRIER BAR LIST

ALL REINFORCING SHALL BE AASHTO M 31, GR. 60.

MARK	SIZE	LENGTH	BENDING DIAGRAM (ALL DIMENSIONS ARE OUT TO OUT)
B1	5	(a)	
B2	4	3'-2"	STR.
B3	4	(a)	STR.
B4	6	(a)	STR.
B8	5	(a)	
S3	5	3'-6"	
S4	4	2'-3"	

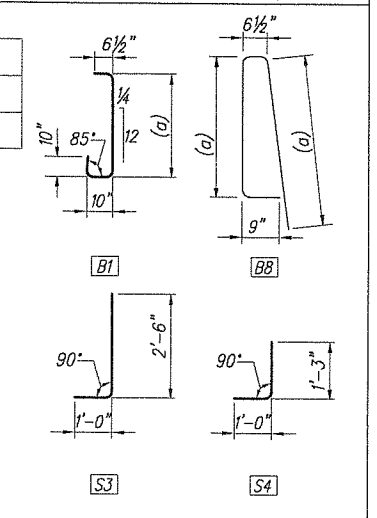

FOR STR. BAR BENDS AND SIZES, SEE BRIDGE BARLIST.
(a) DETERMINE FROM PLANS
E EPOXY COATED

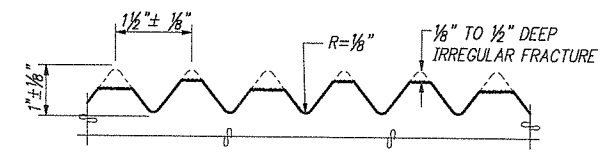

FRACTURED FIN FINISH

Fed. Aid No.
STPF-4253(010)

DESIGNED C. TOTTEN
DRAWN L. WILKES
CRP 393922
HOR. N/A
VERT. N/A
DATE FEB. 20, 2004
DWG: S63
SHEET 65 OF 78

CALL 48 HOURS BEFORE YOU DIG 1-800-553-4344 "It's the Law" CLARK COUNTY UTILITIES COORDINATING COUNCIL

DESIGN & ENGINEERING DIVISION
NE 20TH AVE/HGWY 99 REALIG.
CLARK COUNTY
BRIDGE BARRIER DETAILS I

STATE OF WASHINGTON 26463 REGISTERED PROFESSIONAL ENGINEER
EXPIRES 12/31/2006

otak Incorporated
105 W. Evergreen Blvd., Suite 300
Vancouver, WA 98660-3123
Phone: (360) 737-4013
Fax: (360) 737-9631

kpff Consulting Engineers
111 SW 5th Avenue
Suite 2500
Portland, Oregon 97204
503-227-3251

proud past, promising future
CLARK COUNTY WASHINGTON

PLOTTED DATE & TIME	UPDATED BY	PLOT SCALE	'PCP' FILE	PLOT VIEW
		1:1		

FILE PATH & NAME: D:\2-PROJECTS\99680\99680-S63.DWG

JOB #	JOB NAME
99680	N.E. HIGHWAY 99

XREFS: X99680,

Fed. Aid No.
STPF-4253(010)

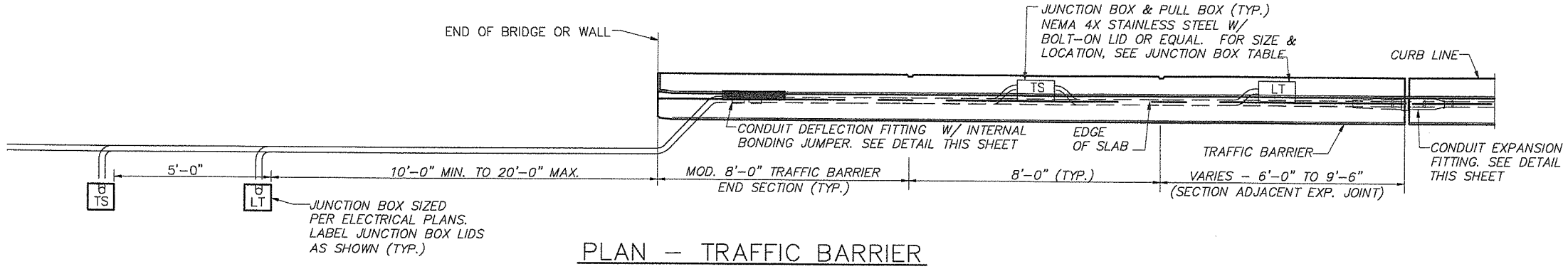

PLAN – TRAFFIC BARRIER

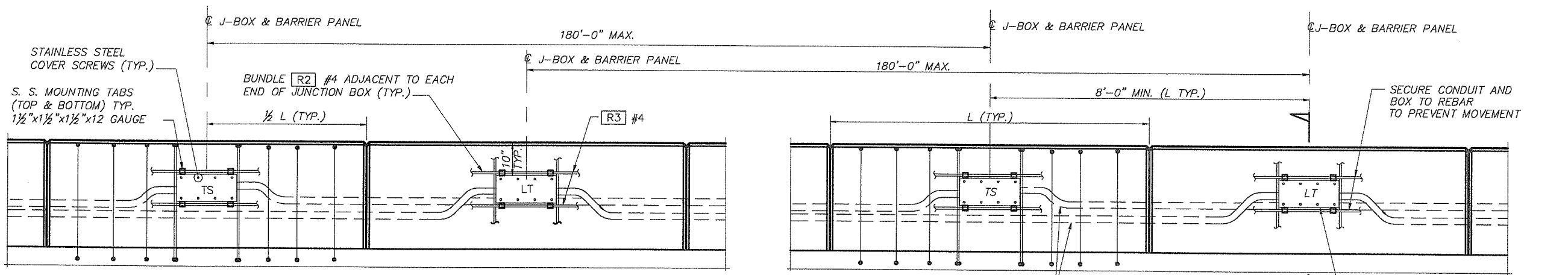

ELEVATION – CONDUITS & J-BOX IN TRAFFIC BARRIER

LABEL JUNCTION BOX COVER IN ACCORDANCE WITH STANDARD PLAN J-11a AND SPECIAL PROVISIONS.
ADJACENT JUNCTION BOXES ARE SHOWN CENTERED BETWEEN ADJACENT DUMMY JOINTS. IF THE DISTANCE BETWEEN ADJACENT DUMMY JOINTS IS 16'-0" OR GREATER, PLACE ADJACENT JUNCTION BOXES SYMETRICALLY ON EITHER SIDE OF THE CENTER OF ONE DUMMY PANEL WHILE MAINTAINING 8'-0" MINIMUM BETWEEN CENTER LINES OF THE JUNCTION BOXES.

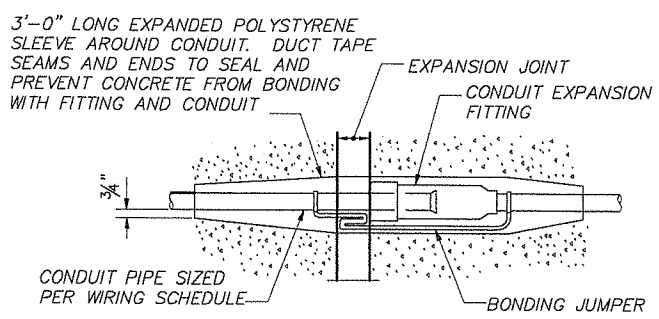

CONDUIT EXPANSION FITTING

CONDUIT FITTING – (TYPE AX FOR MOVEMENT OF ± 2") AT BRIDGE EXPANSION JOINTS

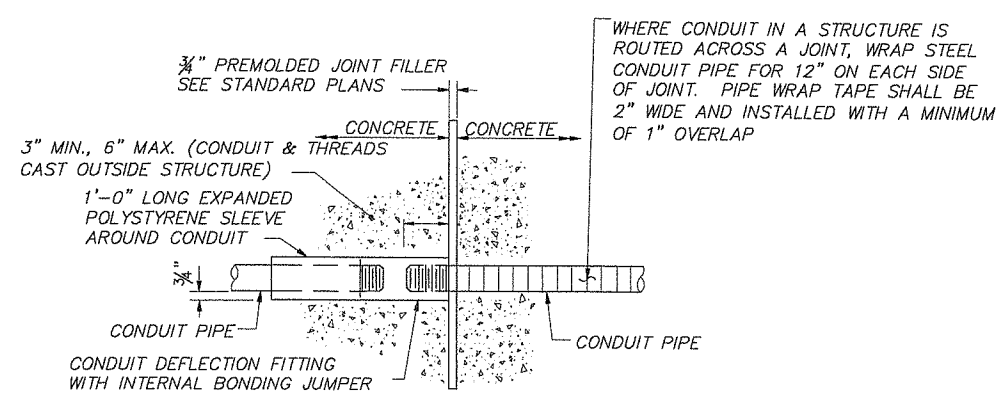

CONDUIT DEFLECTION FITTING B

CONDUIT FITTING – TYPE DX FOR DEFLECTION OF 30° AND ¾" MOVEMENT. CONDUIT PIPES PLACED THROUGH RETAIING WALL TRAFFIC BARRIER SHALL BE FITTED WITH DEFLECTION FITTINGS AT A MAXIMUM SPACING OF 120 FEET. THE DEFLECTION FITTINGS SHALL BE PLACED AT THE TRAFFIC BARRIER OPEN JOINT THAT COINCIDES WITH THE RETAINING WALL STEM EXPANSION JOINT NEAREST TO THE TRANSVERSE CONSTRUCTION JOINT IN THE WALL FOOTING.

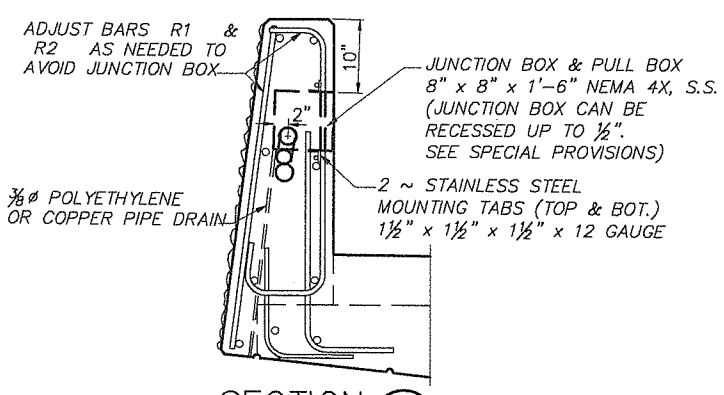

SECTION A

WHERE CONDUIT IN A STRUCTURE IS ROUTED ACROSS A JOINT, WRAP STEEL CONDUIT PIPE FOR 12" ON EACH SIDE OF JOINT. PIPE WRAP TAPE SHALL BE 2" WIDE AND INSTALLED WITH A MINIMUM OF 1" OVERLAP

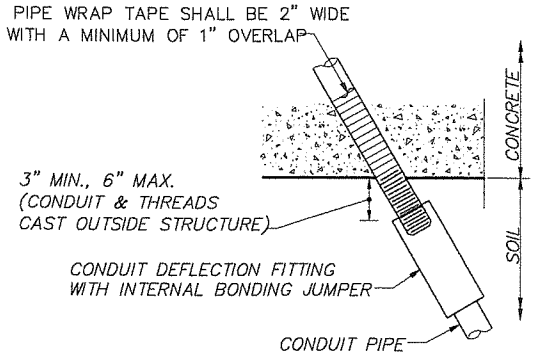

CONDUIT DEFLECTION FITTING A

CONDUIT FITTING – TYPE DX FOR DEFLECTION OF 30° AND ¾" MOVEMENT. PLACE AT CONDUIT PIPE EXIT FROM STRUCTURE

JUNCTION BOX LOCATIONS IN BARRIER

STATION *	OFFSET DIRECTION	STATION *	OFFSET DIRECTION
27+60	L	27+80	R
27+68	L	27+88	R
29+21	L	29+60	R
29+29	L	29+68	R
31+01	L	31+40	R
31+09	L	31+48	R
32+34	L	32+03	R
32+42	L	32+11	R

* STATION TO THE NEAREST INTEGER.

DESIGNED C. TOTTEN
DRAWN J. WILKES
CRP 392922
HOR. N/A
VERT. N/A
DATE FEB. 20, 2004
DWG: S64
SHEET 66 OF 78

CALL 48 HOURS BEFORE YOU DIG 1-800-553-4344 "It's the Law" CLARK COUNTY UTILITIES COORDINATING COUNCIL

DESIGN & ENGINEERING DIVISION
NE 20TH AVE/HGWY 99 REALIG.
CLARK COUNTY
BRIDGE BARRIER DETAILS II

STATE OF WASHINGTON 22845 REGISTERED PROFESSIONAL ENGINEER
EXPIRES 2/19/2006

otak Incorporated
105 E. Evergreen Blvd., Suite 500
Vancouver, WA 98660-3128
Phone: (360) 737-8615
Fax: (360) 737-9691

kpff Consulting Engineers
111 SW 5th Avenue
Suite 2500
Portland, Oregon 97204
503-227-3251

proud past, promising future
CLARK COUNTY WASHINGTON

PLOTTED DATE & TIME	UPDATED BY	PLOT SCALE	'PCP' FILE	PLOT VIEW
		1:1		

FILE PATH & NAME: D:\2-PROJECTS\99680\99680-S63.DWG

JOB #	JOB NAME
99680	N.E. HIGHWAY 99

XREFS: X99680,

Fed. Aid No.
STPF-4253(010)

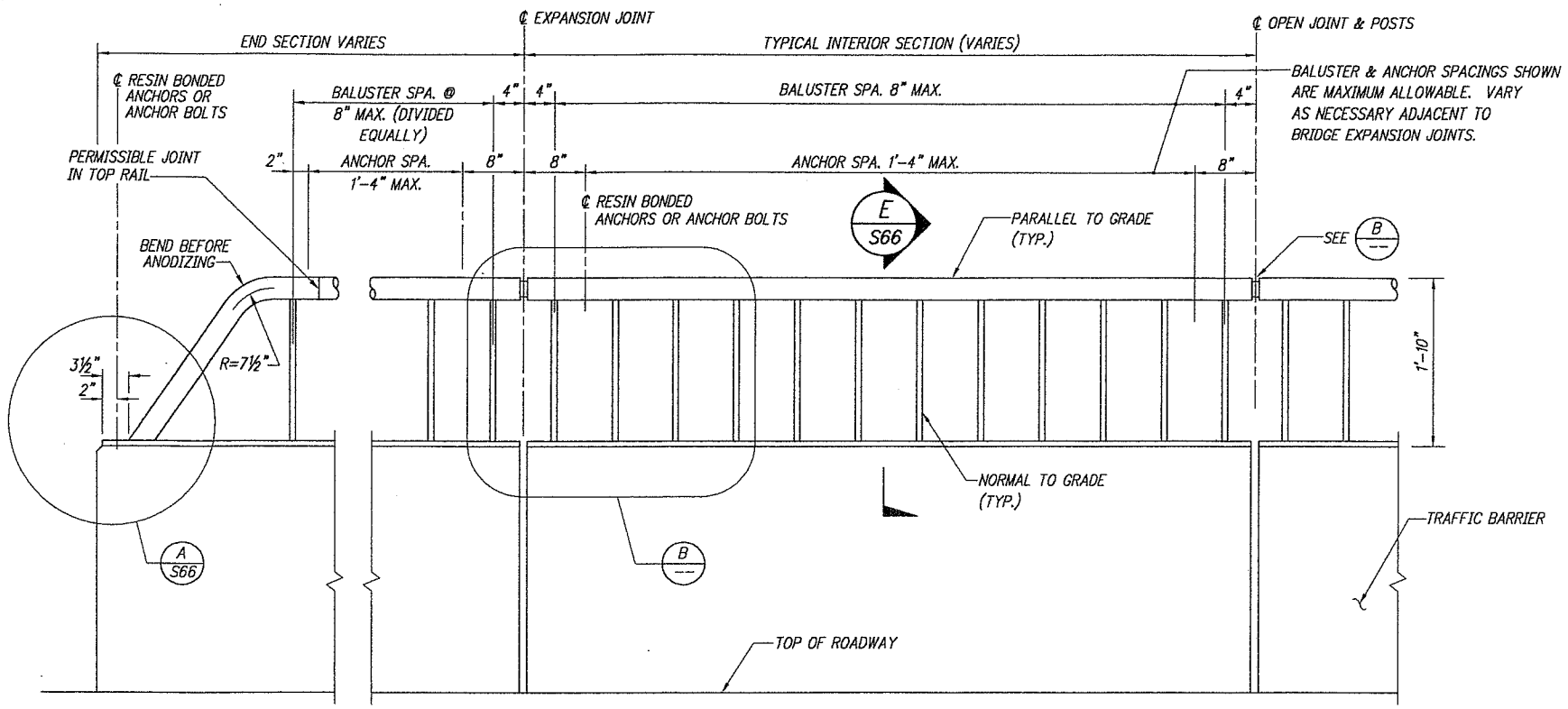

ELEVATION

NOTES

SHOP DRAWINGS OF RAILING SHALL BE SUBMITTED FOR APPROVAL SHOWING COMPLETE DIMENSIONS AND DETAILS OF FABRICATION AND INCLUDING AN ERECTION DIAGRAM. MATERIAL BEING USED SHALL BE SPECIFIED IN THE SHOP DRAWINGS.

ALL ALUMINUM PARTS SHALL BE GIVEN A CLEAR ANODIC COATING AT LEAST 0.0006" THICK, AND SHALL BE SEALED TO MEET THE REQUIREMENTS OF ASTM B 136 AND SHALL HAVE UNIFORM FINISH.

PIPE RAILING, PIPE RAILING SPLICES, COVER PLATES AND BOTTOM EXTRUDED CHANNELS MAY BE HEATED TO NOT MORE THAN 400°F FOR A PERIOD NOT TO EXCEED 30 MIN. TO FACILITATE FORMING OR BENDING.

CUTTING SHALL BE DONE BY SAWING OR MILLING AND ALL CUTS SHALL BE TRUE AND SMOOTH. FLAME CUTTING WILL NOT BE PERMITTED.

PIPE RAILING, PIPE BALUSTERS, PIPE RAILING SPLICES, COVER PLATES AND BOTTOM EXTRUDED CHANNELS SHALL BE ADEQUATELY WRAPPED TO INSURE SURFACE PROTECTION DURING HANDLING AND TRANSPORTATION TO THE JOB SITE.

WELDING OF ALUMINUM SHALL CONFORM TO SECTION 9-28.14 (3) OF THE LATEST AASHTO STANDARD SPECIFICATIONS FOR STRUCTURAL SUPPORTS FOR HIGHWAY SIGNS, LUMINAIRES AND TRAFFIC SIGNALS.

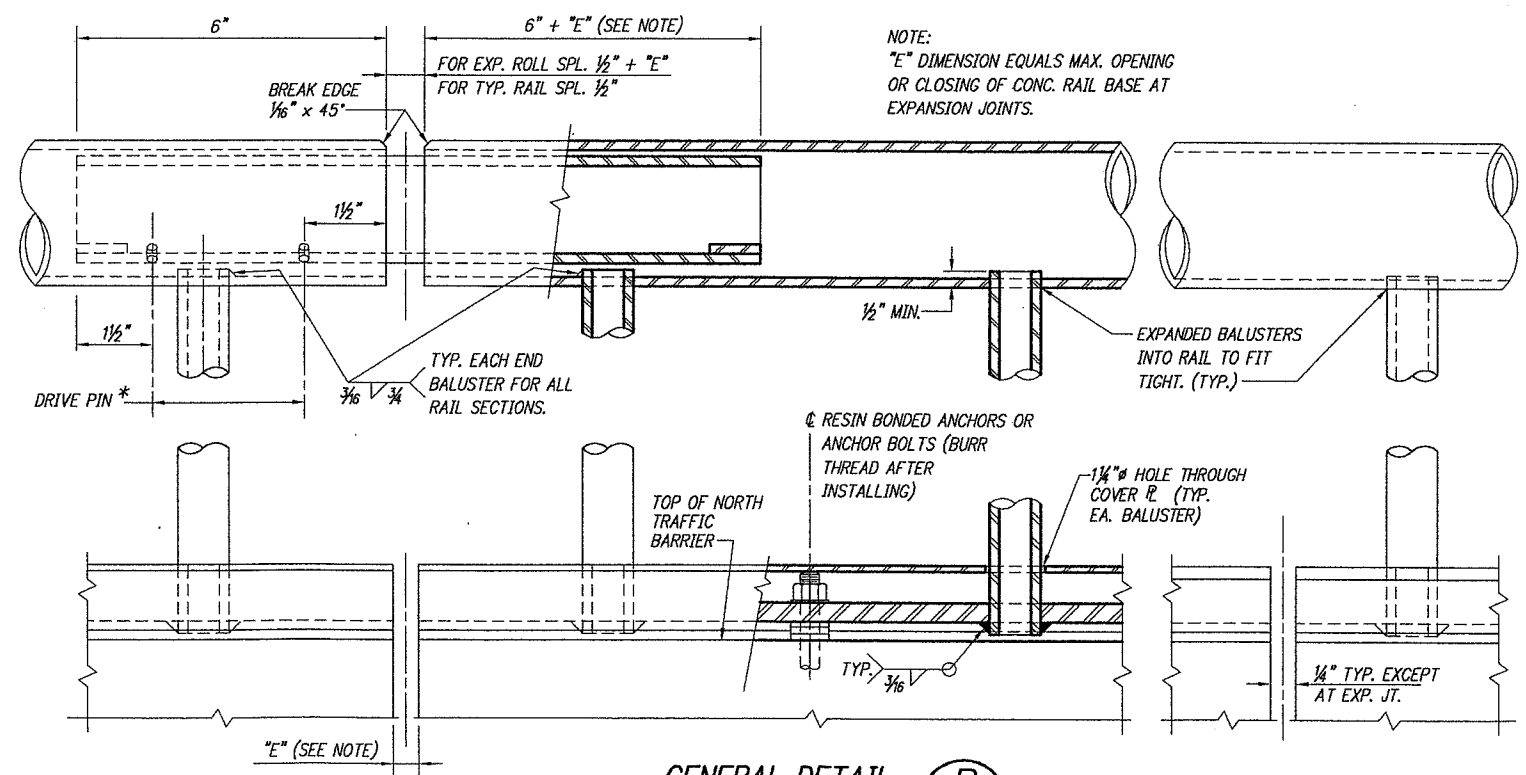

NOTE:
"E" DIMENSION EQUALS MAX. OPENING OR CLOSING OF CONC. RAIL BASE AT EXPANSION JOINTS.

GENERAL DETAIL B

DESIGNED: G. TOTTEN
DRAWN: L. MILKES
CRP: 392922
HOR: N/A
VERT: N/A
DATE: FEB. 20, 2004
DWG: S65
SHEET 67 OF 78

CALL 48 HOURS BEFORE YOU DIG 1-800-553-4344 "It's the Law" ALL CLARK COUNTY UTILITIES COORDINATING COUNCIL

DESIGN & ENGINEERING DIVISION
NE 20TH AVE/HGWY 99 REALIG.
CLARK COUNTY
BRIDGE RAILING TYPE BP
DETAILS I

STATE OF WASHINGTON STEVEN H. HASLAM 19806 REGISTERED PROFESSIONAL ENGINEER
EXPIRES 12/17/2004

otak Incorporated
100 W. Evergreen Blvd., Suite 300
Vancouver, WA 98660-3123
Phone: (360) 737-8613
FAX: (360) 737-8651

kpff Consulting Engineers
111 SW 5th Avenue
Suite 2500
Portland, Oregon 97204
503-227-3251

proud past, promising future
CLARK COUNTY WASHINGTON

NOTES:						
JOB #	JOB NAME	FILE PATH & NAME	UPDATED BY	PLOT SCALE	'POP' FILE	PLOTTED DATE & TIME
99680	N.E. HIGHWAY 99	D:\2-PROJECTS\99680\99680-S64.DWG		1:1		PLOT VIEW
XREFS: X99680,						

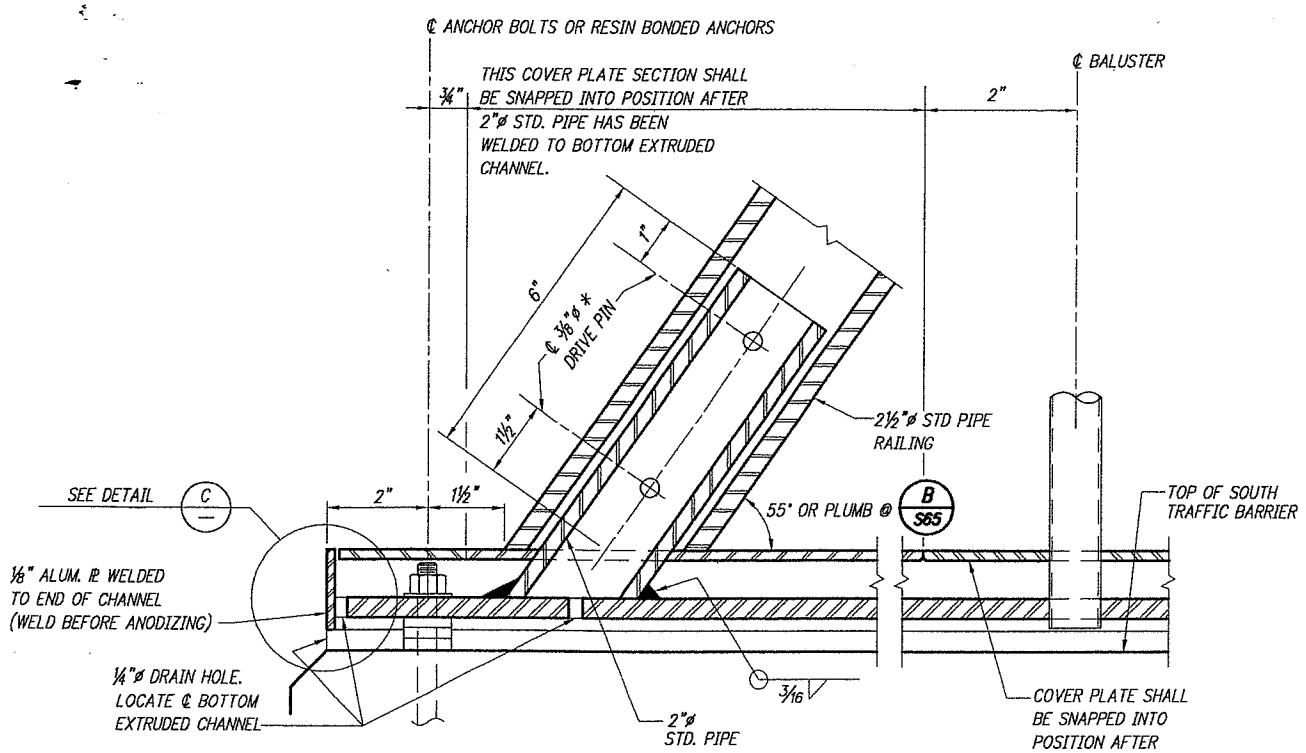

END DETAIL A S65

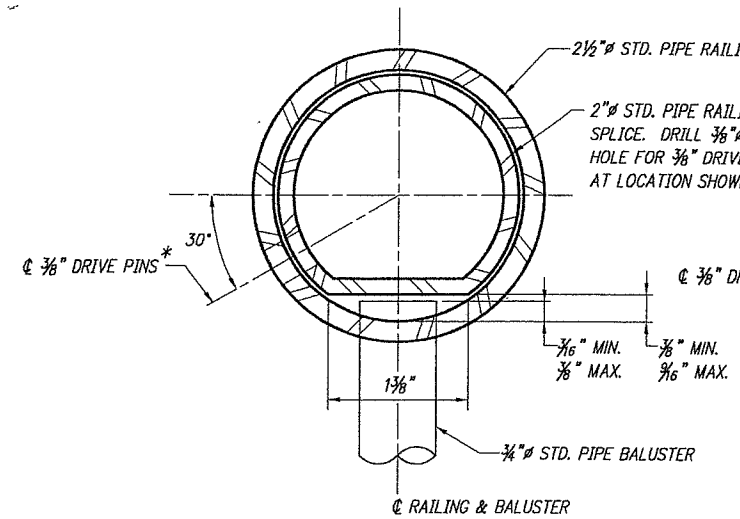

DETAIL B
OPTION #1

* LOCATE ON OPPOSITE SIDE OF TRAFFIC. DRIVE PINS SHALL BE DRIVEN FLUSH WITH THE OUTSIDE FACE OF THE RAILING.

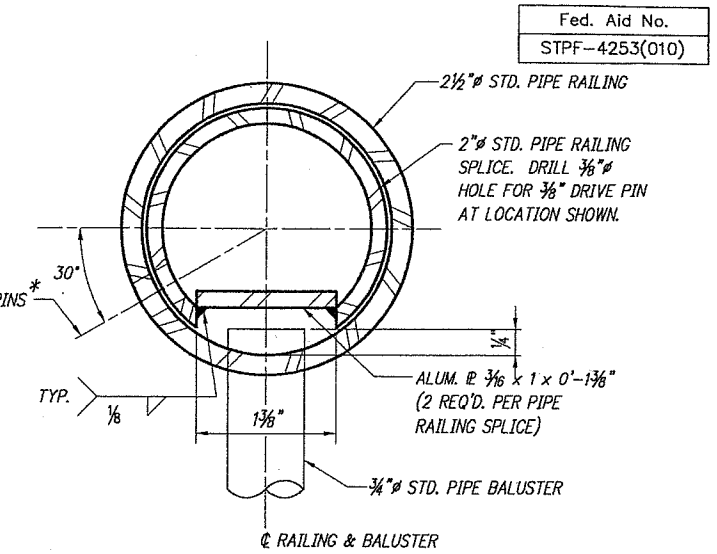

DETAIL B
OPTION #2

* LOCATE ON OPPOSITE SIDE OF TRAFFIC. DRIVE PINS SHALL BE DRIVEN FLUSH WITH THE OUTSIDE FACE OF THE RAILING.

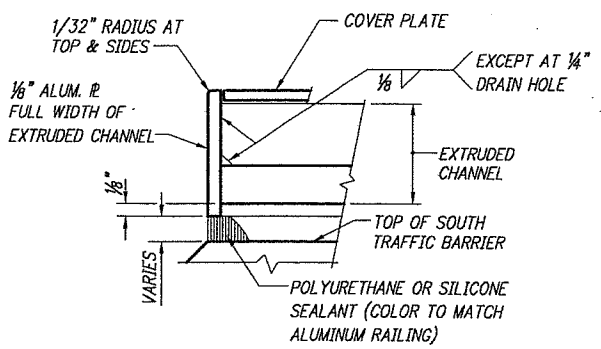

DETAIL C
DRAIN HOLES NOT SHOWN

	PART	MATERIAL SPECIFICATION
ALUMINUM	PIPES	ASTM B241 OR B429 ALLOY 6061-T6 OR 6005-T5 SCHEDULE 40 (STD. PIPE)
ALUMINUM	EXTRUDED CHANNELS & COVER PLATES	ASTM B241-6005-T5 SCHEDULE 40 (STD. PIPE) ANSI H35.2, TABLE 16.7
STEEL	ANCHOR BOLTS, NUTS & WASHERS	AASHTO M164 (GALVANIZE IN ACCORDANCE WITH AASHTO SPECIFICATION M232)
STEEL	PLATES	ASTM A36
STEEL	DRIVE PINS	ASTM A-276 TYPE 304 STAINLESS STEEL

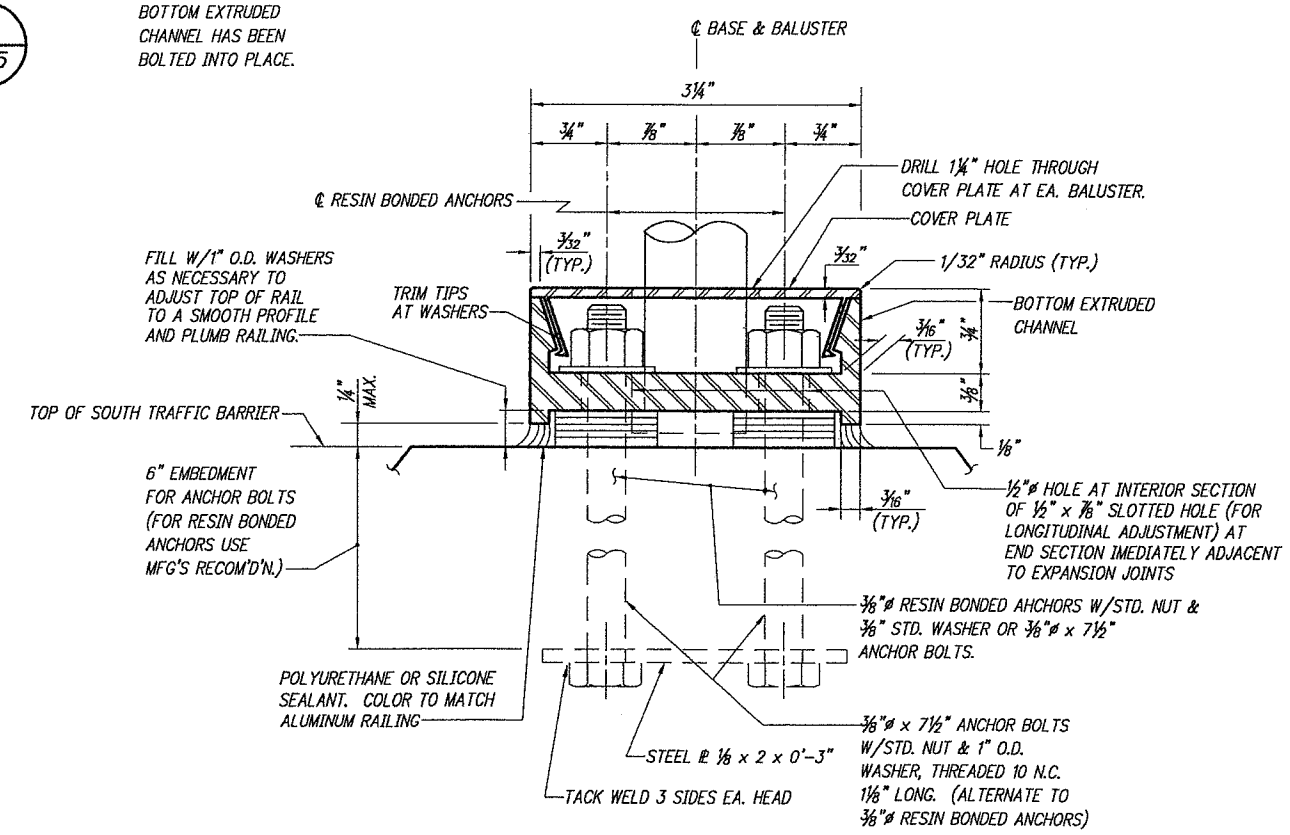

DETAIL D
ANCHOR BOLTS SHALL BE POSITIONED IN A JIG DURING WELDING.

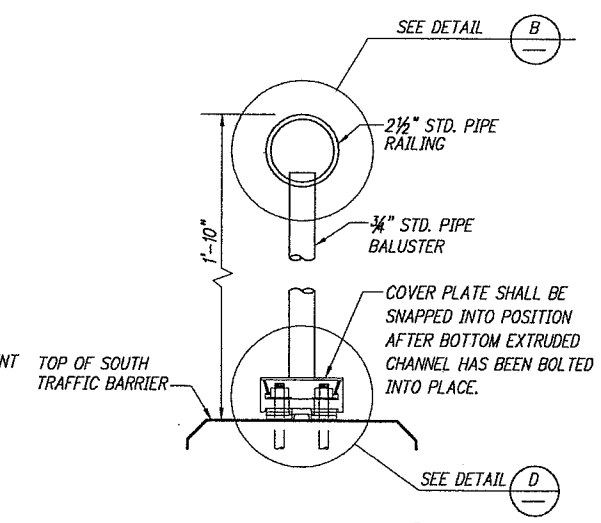

SECTION E S65

Fed. Aid No.
STPF-4253(010)

DESIGNED C. TOTTEN
DRAWN J. WILKES
CRP 393822
HOR. N/A
VERT. N/A
DATE FEB. 20, 2004
DWG: S65
SHEET 68 OF 78

CALL 48 HOURS BEFORE YOU DIG 1-800-553-4344 "It's the Law" CLARK COUNTY COORDINATING COUNCIL

DESIGN & ENGINEERING DIVISION

NE 20TH AVE/HGWY 99 REALIG.
CLARK COUNTY
BRIDGE RAILING TYPE BP
DETAILS II

STATE OF WASHINGTON — DAVID L. HASLEN — 19658 — REGISTERED PROFESSIONAL ENGINEER — 3/11/04 — EXPIRES 7/9/2005

otak Incorporated
105 W. Evergreen Blvd., Suite 300
Vancouver, WA 98660-3123
Phone: (360) 737-8613
FAX: (360) 737-4601

kpff Consulting Engineers
111 SW 5th Avenue
Portland, Oregon 97204
503-227-3251

proud past, promising future

CLARK COUNTY WASHINGTON

NOTES:

JOB #	JOB NAME	FILE PATH & NAME	PLOTTED DATE & TIME	UPDATED BY	PLOT SCALE	'PCP' FILE	PLOT VIEW
99680	N.E. HIGHWAY 99	D:\2-PROJECTS\99680\99680-S65.DWG			1:1		

XREFS: X99680.

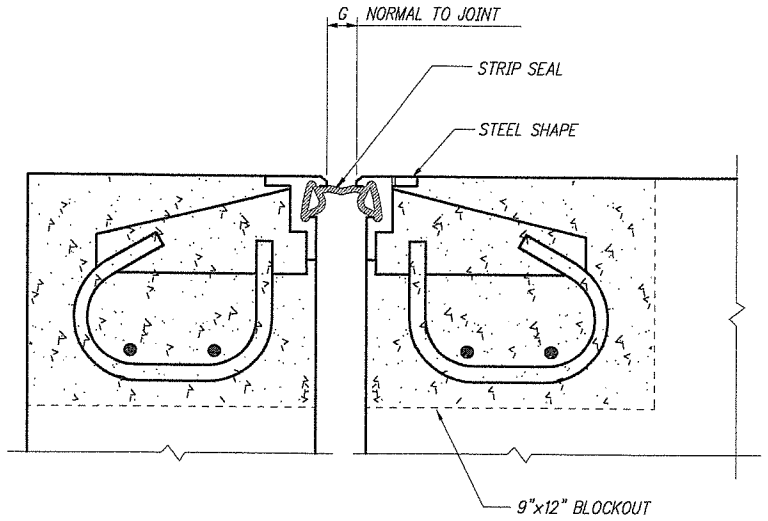

STRIP SEAL

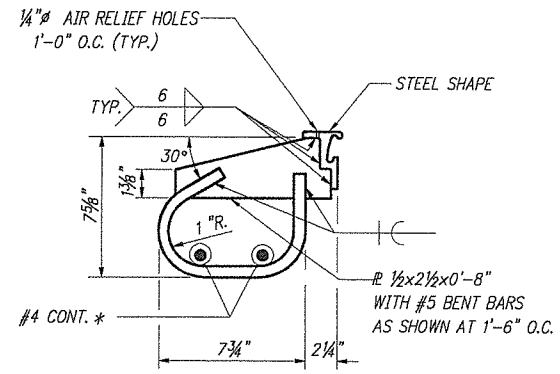

STRIP SEAL DETAIL

REQUIRES 9" x 12" MIN. BLOCKOUT.
EXTEND SLAB STEEL INTO THE BLOCKOUT.
EXTEND BLOCKOUT TO EDGE OF DECK.

* THREAD INTO PLACE FROM THE ENDS AFTER SPECIAL ANCHORAGE HAS BEEN PLACED IN POSITION.

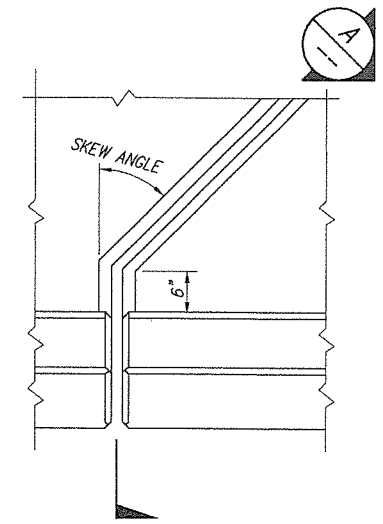

PLAN – EXPANSION JOINT–EAST SIDE

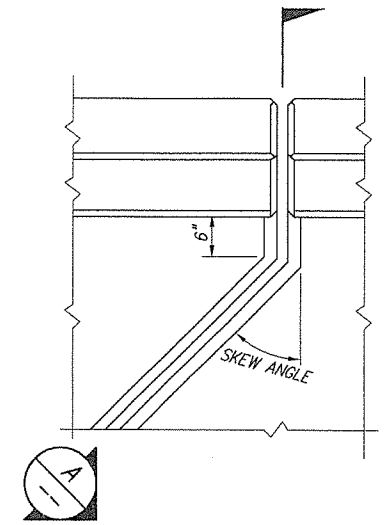

PLAN – EXPANSION JOINT–WEST SIDE

Fed. Aid No.
STPF–4253(010)

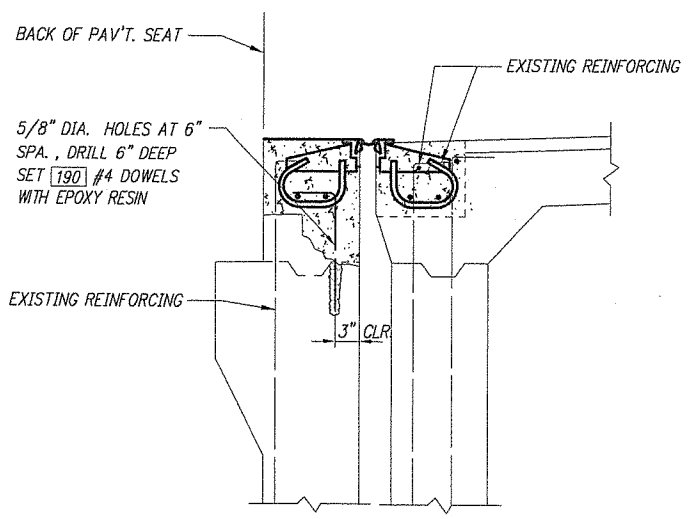

EXPANSION JOINT RETROFIT

B
–

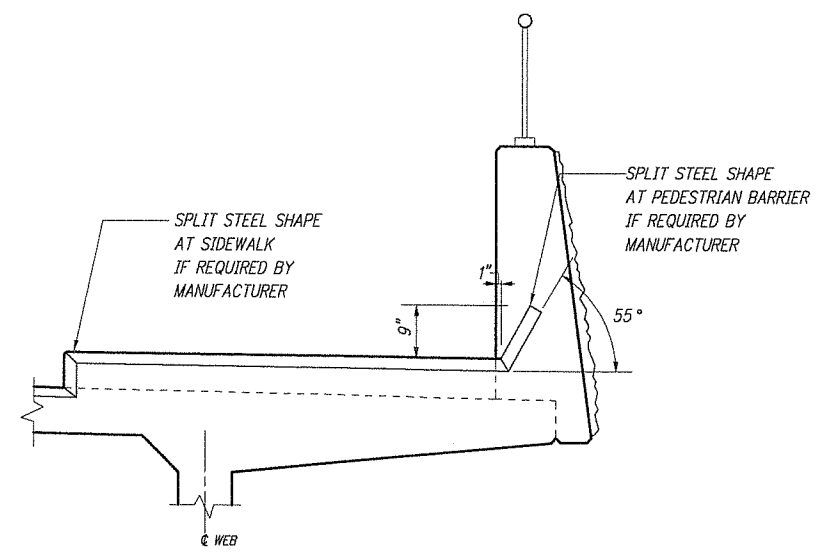

SECTION

SHOWN OPPOSITE AT WEST SIDE

A
–

STRIP SEAL TABLE

MANUFACTURER	SEAL NAME	OPENING G NORMAL TO JT.		MIN. INSTALLATION WIDTH NORMAL TO JOINT	OPENING G NORMAL TO JT.			STEEL SHAPE TYPE
		MIN.	MAX.		@ 40°	@ 64°	@ 80°	
D.S. BROWN	DSB STRIP SEAL A2R	½"	4½"	1½"	1¾"	1½"	1⅜"	SSCM2
WATSON BOWMAN ACME	WABO STRIP SEAL SE400	0"	4"	1½"	1¾"	1½"	1⅜"	M, R
R.J. WATSON, INC.	RJ STRIP SEAL 400	0"	4"	1½"	1¾"	1½"	1⅜"	RJM
HEXCEL FYFE CO.	STRIP J200–C ES500	¼"	5½"	1½"	1¾"	1½"	1⅜"	C

STEEL SHAPE TYPES

MANUFACTURER	ITEM NAME	TYPE	S	T
D.S. BROWN	DSB STRIP SEAL	SSCM2	2¼"	8"
WATSON BOWMAN ACME	WABO STRIP SEAL	M, R	2¾"	3¼"
R.J. WATSON, INC.	RJ STRIP SEAL	C	2¾"	3¼"
HEXCEL FYFE CO.	STRIP J200–C	RJM	2½"	3"

DESIGNED C. TOTTEN
DRAWN J. NUKES
CRP 302922
HOR. N/A
VERT. N/A
DATE FEB. 20, 2004
DWG. S67
SHEET 69 OF 78

CALL 48 HOURS BEFORE YOU DIG 1-800-553-4344 "It's the Law" CLARK COUNTY UTILITIES COORDINATING COUNCIL

DESIGN & ENGINEERING DIVISION
NE 20TH AVE/HGWY 99 REALIG.
CLARK COUNTY
BRIDGE EXPANSION JOINT DETAILS

STATE OF WASHINGTON
JAMES A. HUNTINGTON
STATE OF WASHINGTON
GEORGE W. SCHMIDT
REGISTERED PROFESSIONAL ENGINEER
EXPIRES 2/19/2006

otak Incorporated
105 W. Evergreen Blvd., Suite 300
Vancouver, WA 98660-3123
Phone: (360) 737-8813
FAX: (360) 737-9651

kpff Consulting Engineers
111 SW 5th Avenue
Suite 2500
Portland, Oregon 97204
503-227-3251

proud past, promising future
CLARK COUNTY
WASHINGTON

PLOTTED DATE & TIME	UPDATED BY	PLOT SCALE	'PCP' FILE	PLOT VIEW
JUN. 29, 2001 11:41:27 AM	AUNAE	1:1 (1:2)		PLOT

FILE PATH & NAME
V:\BRIDGE H-P\N.E. HIGHWAY 99 (99406)\DESIGN\99680-S66.DWG

JOB #	JOB NAME
99680	N.E. 20 th AVE HIGHWAY 99

XREFS: X99680.

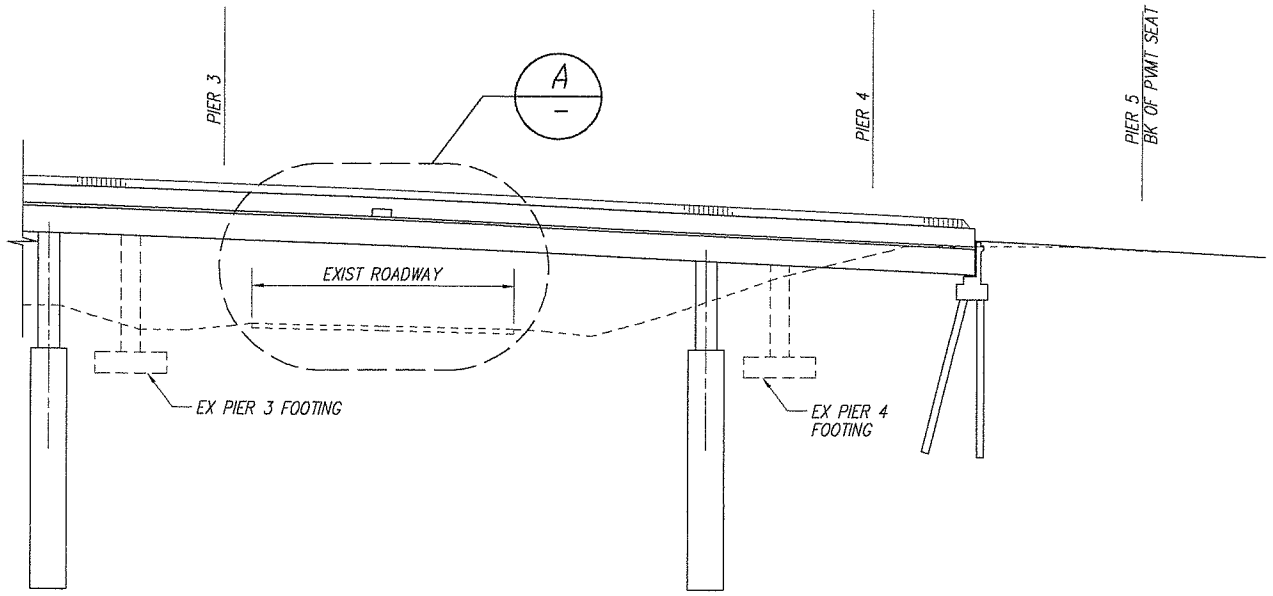

PARTIAL ELEVATION

LOOKING WEST

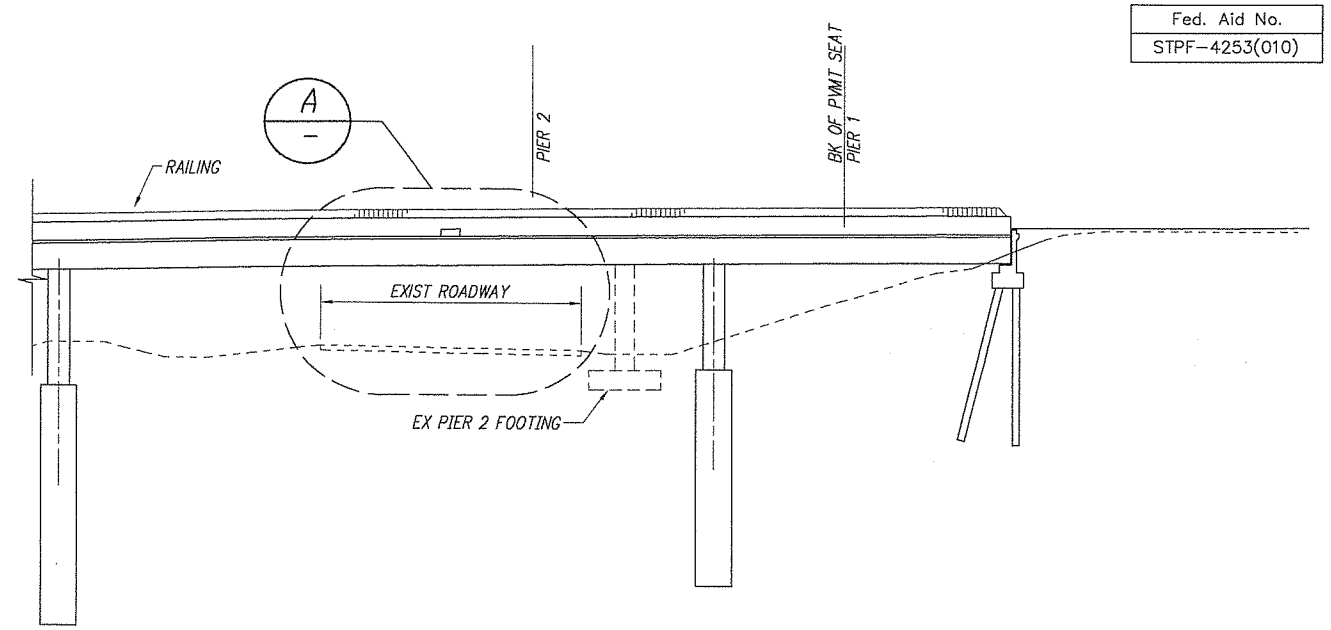

PARTIAL ELEVATION

LOOKING EAST

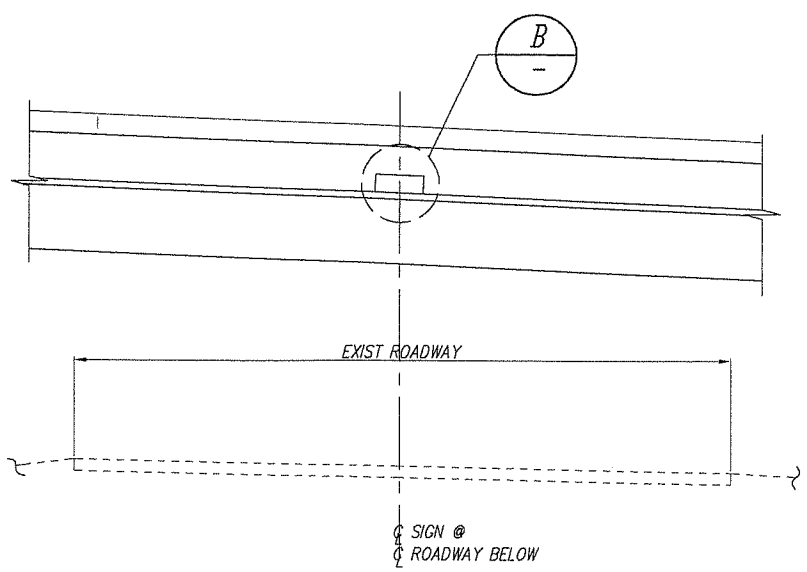

SIGN ELEVATION A

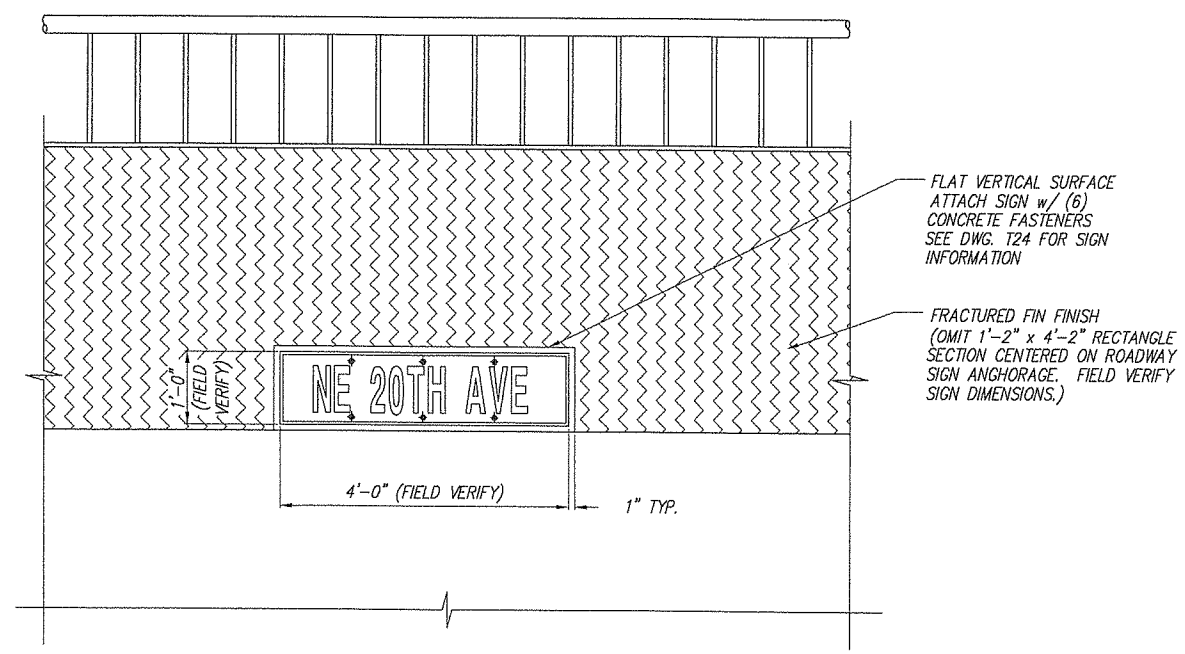

SIGN DETAIL B

Fed. Aid No.
STPF-4253(010)

DESIGNED C. TOTTEN
DRAWN J. WILKES
CRP 392922
HOR. N/A
VERT. N/A
DATE FEB. 20, 2004
DWG. S68
SHEET 70 OF 78

CALL 48 HOURS BEFORE YOU DIG 1-800-553-4344 "It's the Law" CLARK COUNTY UTILITIES COORDINATING COUNCIL

DESIGN & ENGINEERING DIVISION

NE 20TH AVE/HGWY 99 REALIG.
CLARK COUNTY

SIGN RELOCATION DETAILS

STATE OF WASHINGTON
JAMES R. HALSTEN
22806
REGISTERED PROFESSIONAL ENGINEER
2/19/04
EXPIRES 2/19/2005

oak Incorporated
105 W. Evergreen Blvd., Suite 500
Vancouver, WA 98660-3128
Phone: (360) 737-8613
FAX: (360) 737-9551

kpff Consulting Engineers
111 SW 5th Avenue
Suite 2500
Portland, Oregon 97204
503-227-3251

proud past, promising future

CLARK COUNTY
WASHINGTON

PLOTTED DATE & TIME	UPDATED BY	PLOT SCALE	'PCP' FILE	PLOT VIEW
		1:1		

JOB #	JOB NAME	FILE PATH & NAME
99680	N.E. HIGHWAY 99	D:\2-PROJECTS\99680\99680-S67.DWG

XREFS: X99680.

Fed. Aid No.
STPF-4253(010)

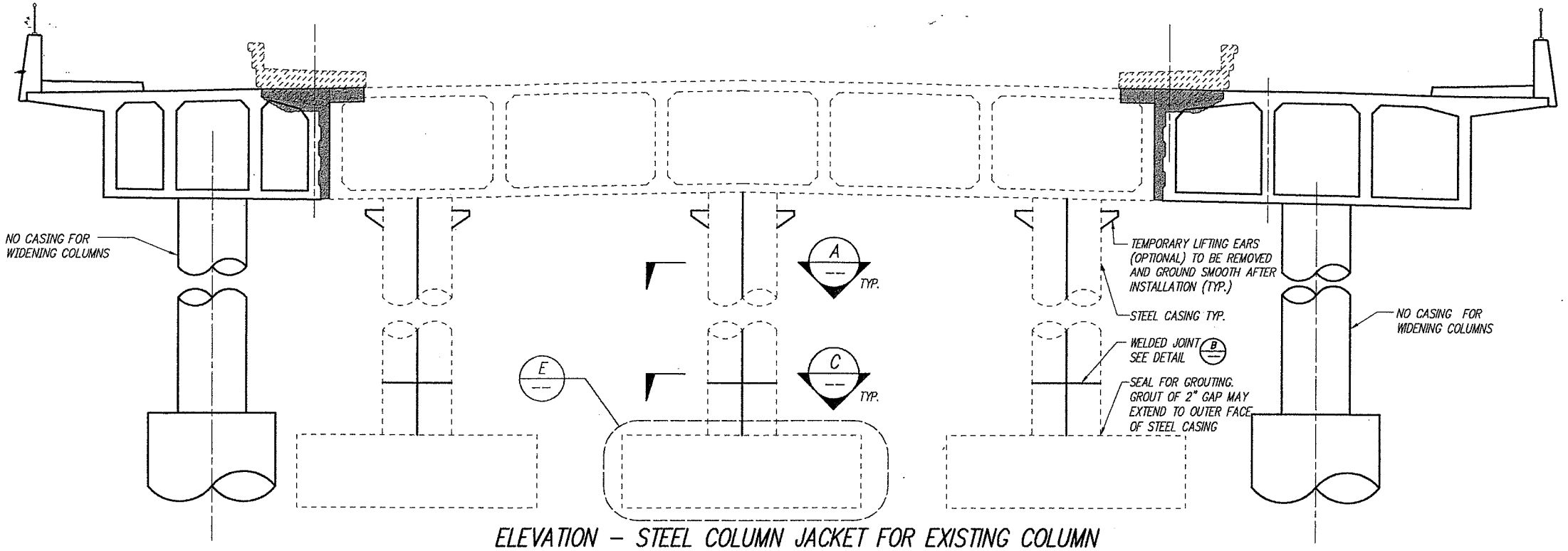

ELEVATION – STEEL COLUMN JACKET FOR EXISTING COLUMN

NOTES:

1. MINIMUM CLEARANCE FROM COLUMN TO CASING SHALL BE MAINTAINED AT 3/4" MIN. AND 1" MAX.
2. GROUT INJECTION NOZZLES SHALL BE PROVIDED ON CASING, AND SHALL BE REMOVED, GROUND FLUSH AND PAINTED FOLLOWING COMPLETION OF GROUTING OPERATION.
3. ALL VOIDS BETWEEN STEEL CASING AND EXISTING COLUMN SURFACE TO BE FILLED WITH GROUT.
4. LOCATION AND NUMBER OF VERTICAL AND HORIZONTAL WELDS SHALL BE DETERMINED BY THE CONTRACTOR, SUBJECT TO THE APPROVAL OF ENGINEER. THE LOCATION OF CASING WELDS ARE FOR ILLUSTRATION. THERE SHALL BE NO SKIP WELDS.
5. ELEVATIONS AND COLUMN DIAMETERS SHOWN ARE BASED ON AS-BUILT DRAWINGS. THE CONTRACTOR SHALL FIELD MEASURE COLUMNS PRIOR TO FABRICATION OF CASING.
6. CASING SHALL BE FABRICATED FROM ASTM A 36 STRUCTURAL STEEL AND PAINTED IN ACCORDANCE WITH SPECIAL PROVISIONS.

STEEL CASINGS

PIER	CASING THICKNESS	L CASING	ø CASING
2	5/8"	22'-7¾"	51 1/4"
3	5/8"	25'-5¼"	51 1/4"
4	5/8"	20'-8¾"	51 1/4"

NOTE:

1. L_{CASING} ESTIMATED LENGTH FROM TOP OF COLUMN TO 2" ABOVE TOP OF FOOTING AT CENTER COLUMN
2. $ø_{CASING}$ IS OUTSIDE DIAMETER

EXISTING PIER ELEVATIONS *

PIER NO.	EXISTING GROUND ELEVATION	TOP OF FOOTING ELEVATION	TOP OF CENTER COLUMN ELEVATION
2	174' ±	167.8'	190.68'
3	173' ±	164.0'	189.60'
4	171' ±	164.6'	185.49'

NOTE:

1. * SEE NOTE 6 THIS SHEET

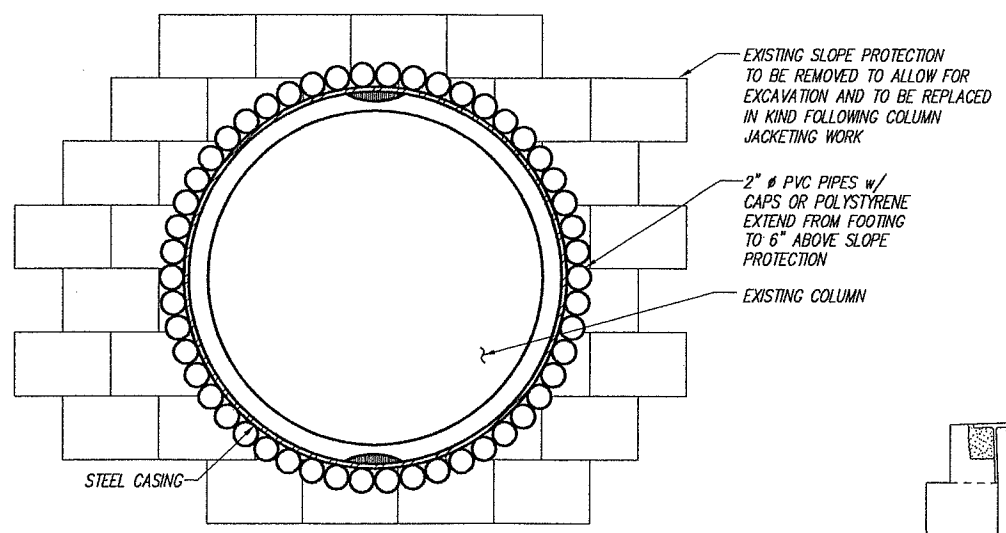

DETAIL C

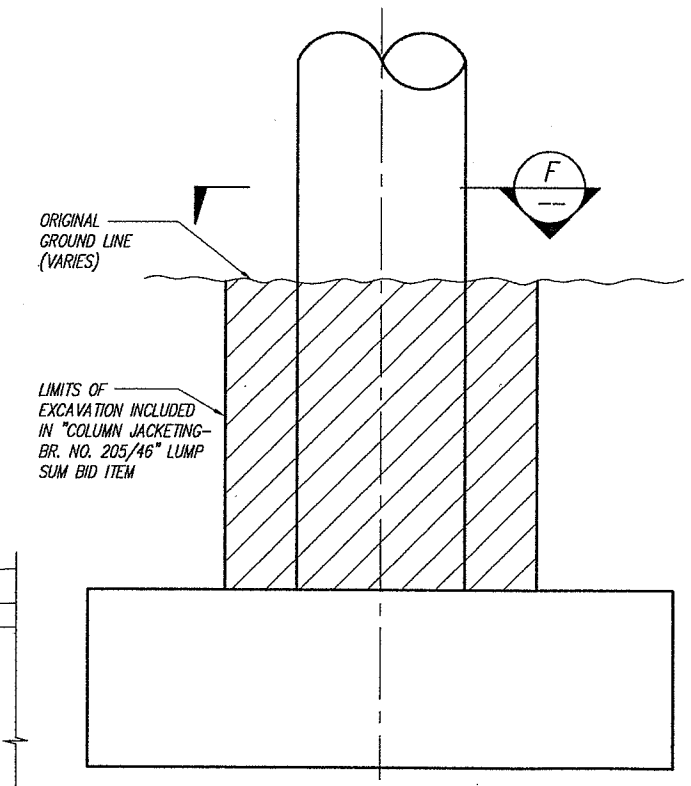

DETAIL E

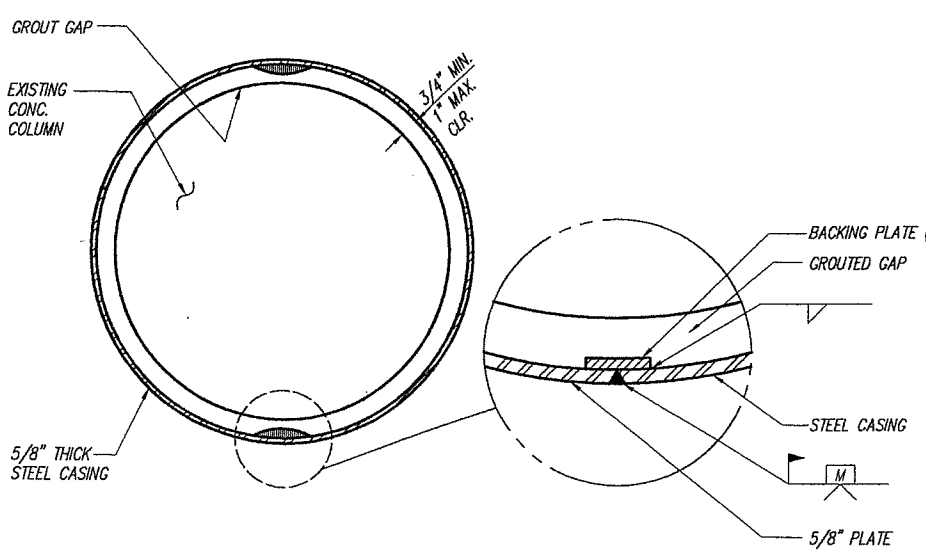

SECTION A

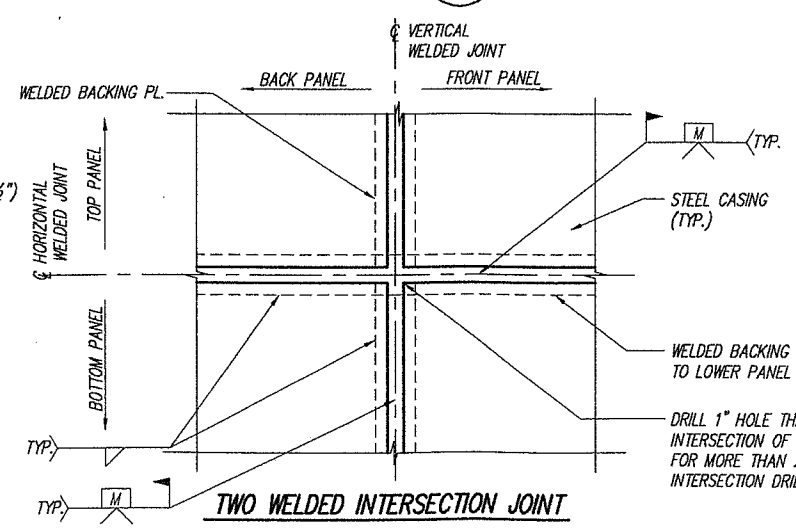

TWO WELDED INTERSECTION JOINT

DETAIL B

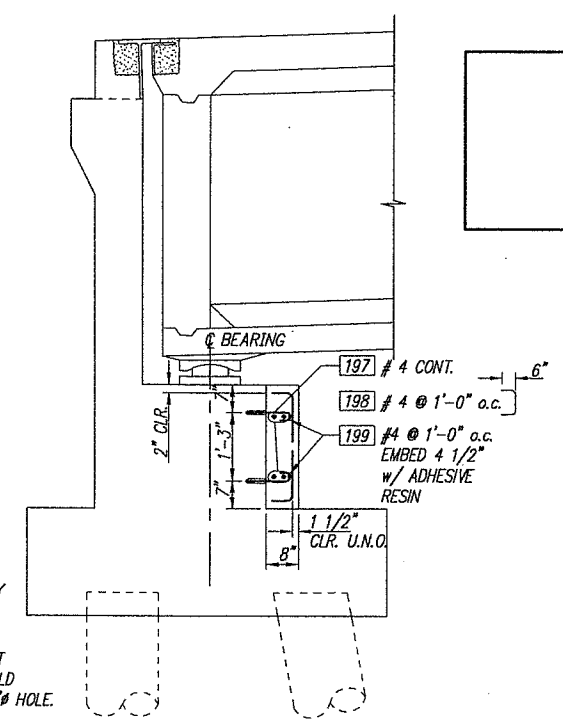

SECTION D S12

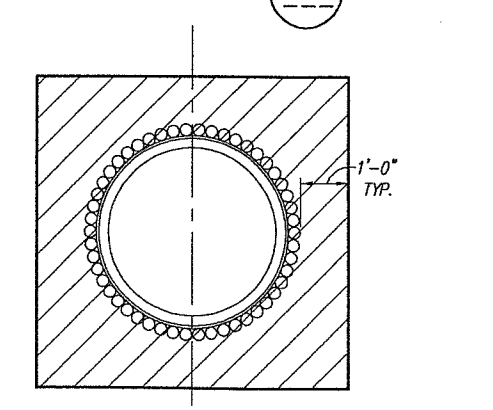

SECTION F

DESIGNED C. TOTTEN
DRAWN J. WILKES
CRP 392922
HOR. N/A
VERT. N/A
DATE FEB. 20, 2004
DWG. S69
SHEET 71 OF 78

CALL 48 HOURS BEFORE YOU DIG 1-800-553-4344 "It's the Law"
CLARK COUNTY UTILITIES COORDINATING COUNCIL

DESIGN & ENGINEERING DIVISION
NE 20TH AVE/HGWY 99 REALIG.
CLARK COUNTY
EXIST. BRIDGE COL. STEEL CASING
DETAILS & PIER 1&5 MODIFICATIONS

STATE OF WASHINGTON — ALI H. HASANEN — 19980 — REGISTERED PROFESSIONAL ENGINEER
EXPIRES 2/8/2006

otak Incorporated
18 W. Evergreen Blvd. Suite 500, Vancouver, WA 98660-3253, Phone: (360) 737-8613, FAX: (360) 737-9631

kpff Consulting Engineers
111 SW 5th Avenue Suite 2500, Portland, Oregon 97204, 503-227-3251

proud past, promising future
CLARK COUNTY WASHINGTON

NOTES:							
JOB #	JOB NAME	FILE PATH & NAME	UPDATED BY	PLOT SCALE	'PCP' FILE	PLOTTED DATE & TIME	PLOT VIEW
99680	N.E. 20 th AVE HIGHWAY 99	V:\BRIDGE H-P\N.E. HIGHWAY 99 (99406)\DESIGN\99680-S68.DWG	ALINAE	1:1 (1:1)		JUN. 29, 2001 11:41:27 AM	PLOT
XREFS: X99680,							

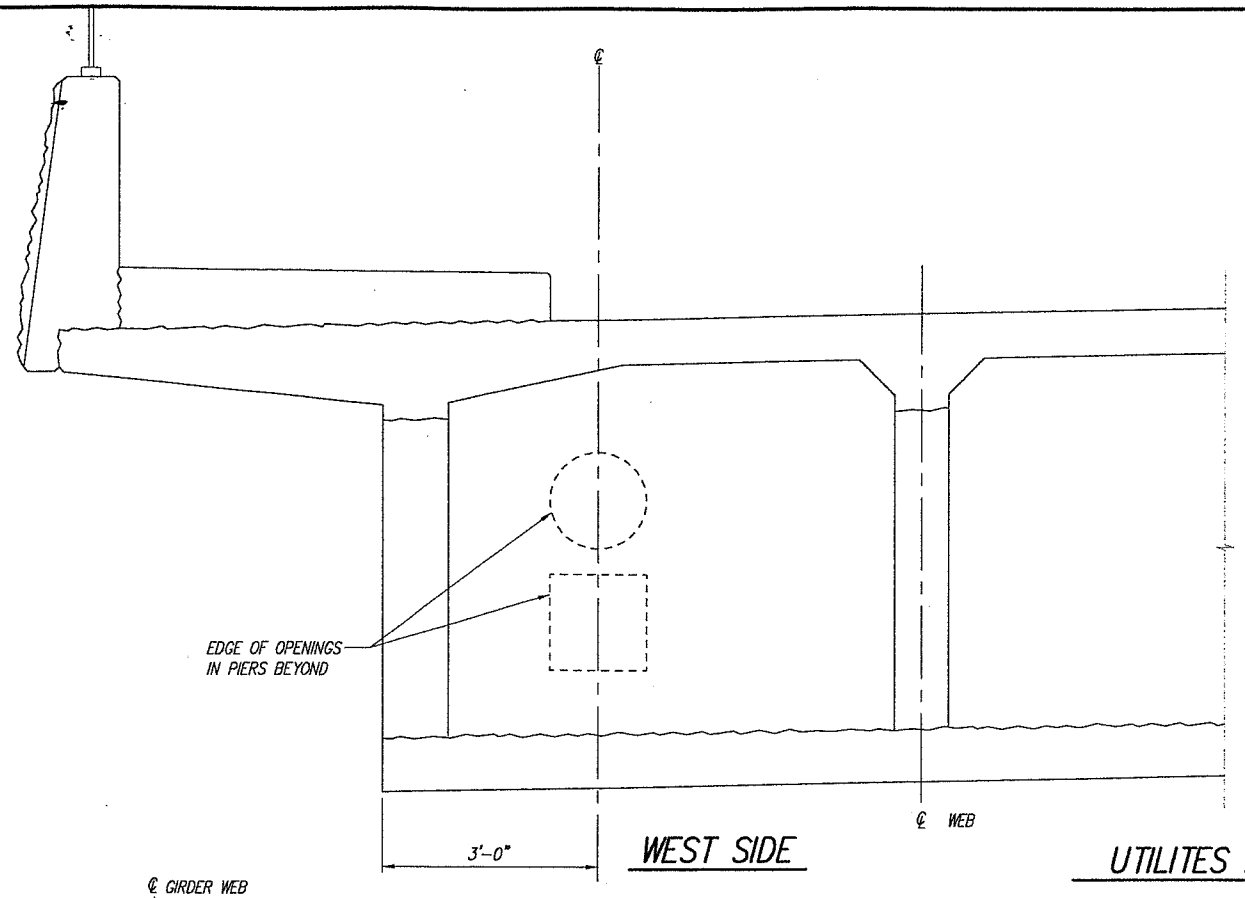

WEST SIDE

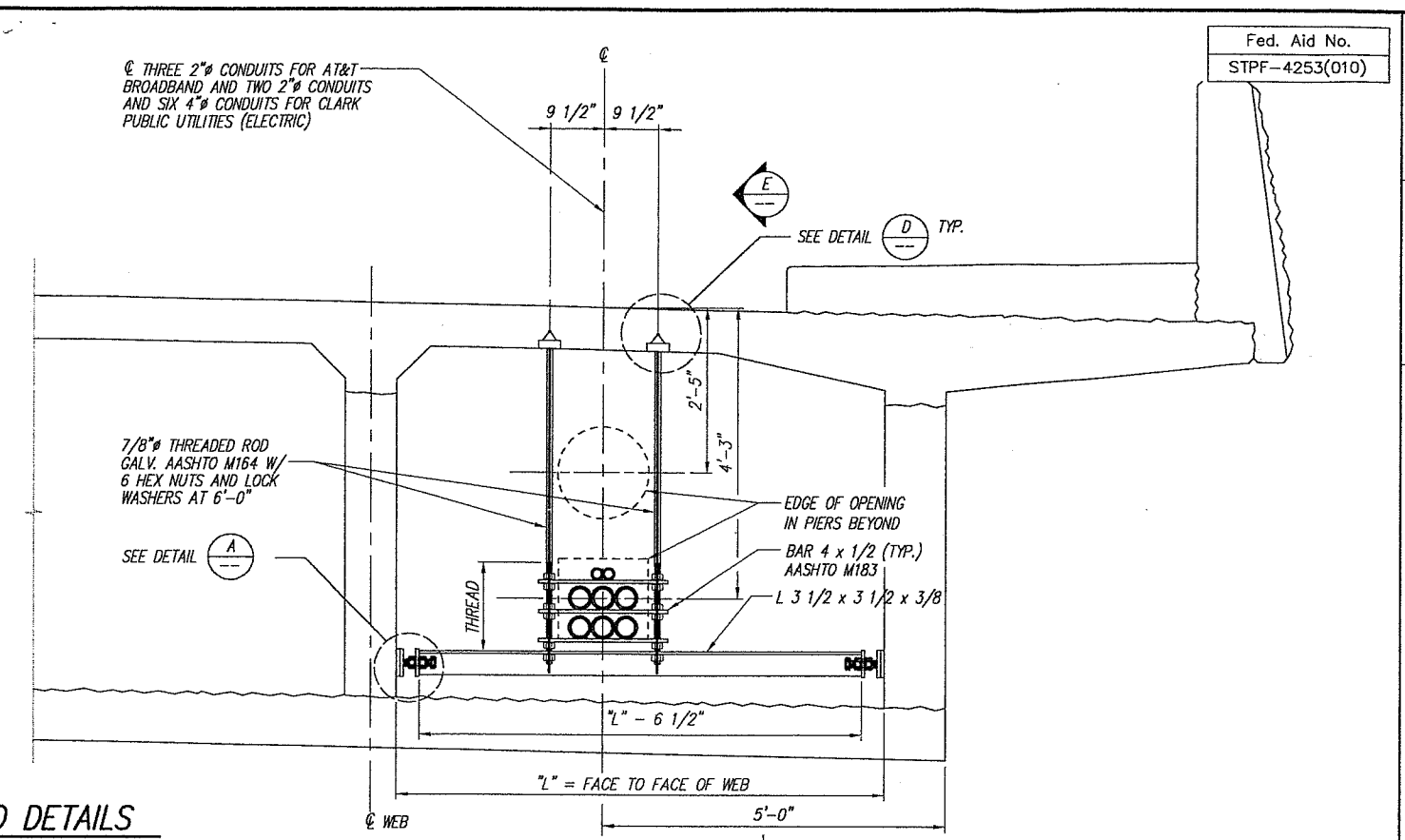

EAST SIDE

UTILITES EMBED DETAILS

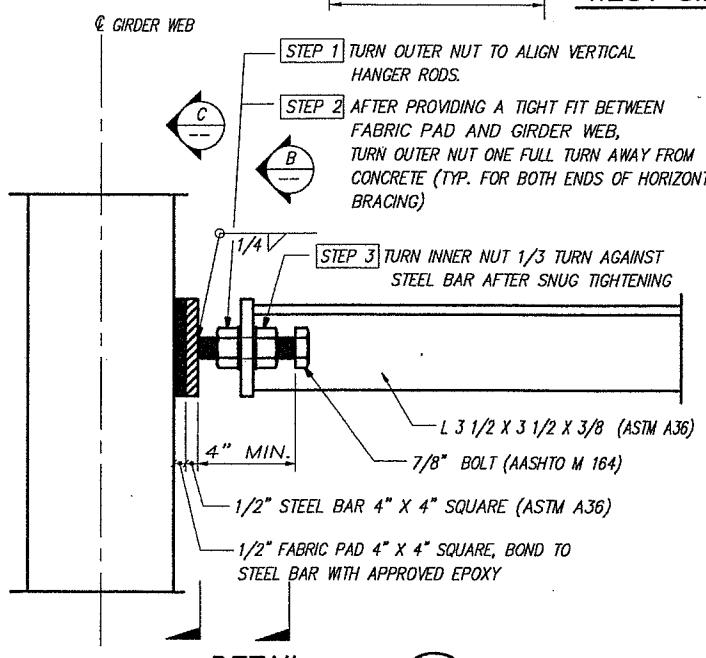

DETAIL A

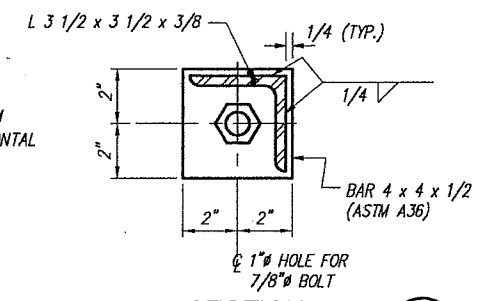

SECTION B

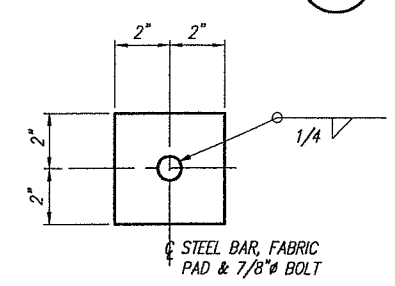

SECTION C

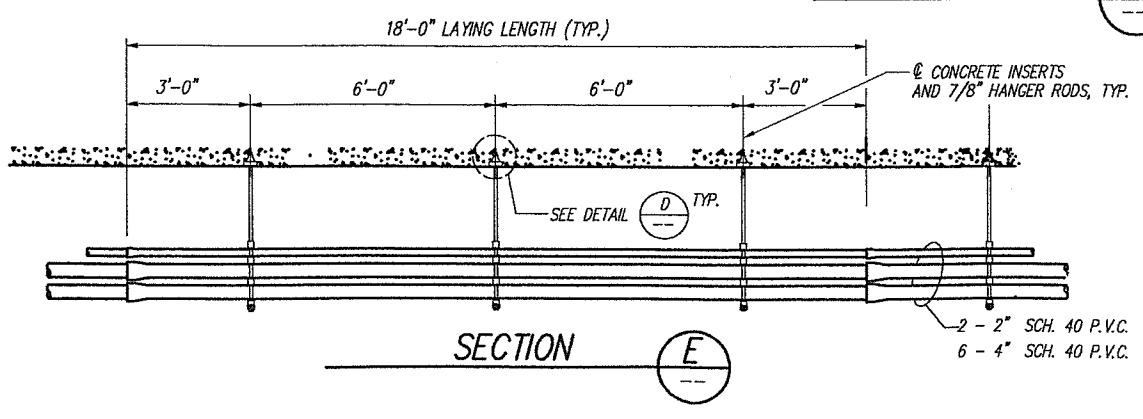

SECTION E

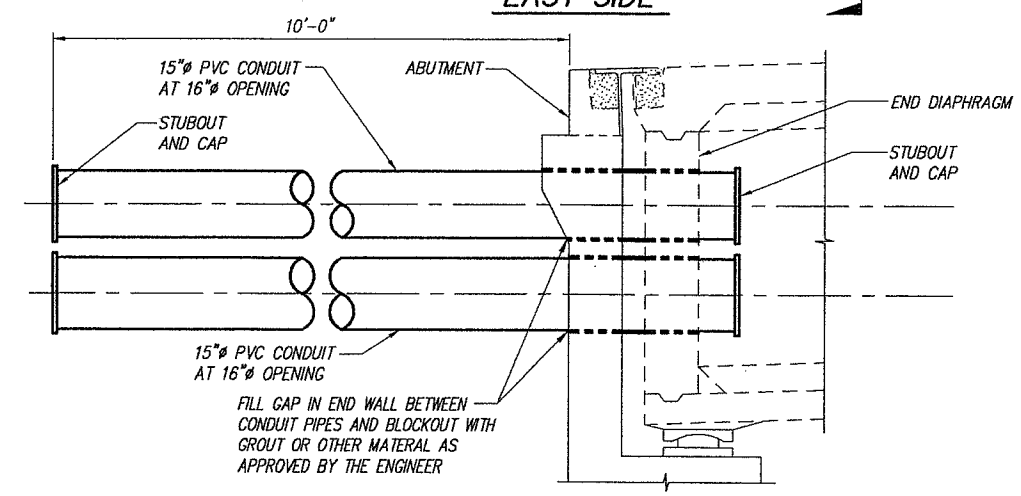

CONDUIT PLACEMENT FOR FUTURE UTILITIES

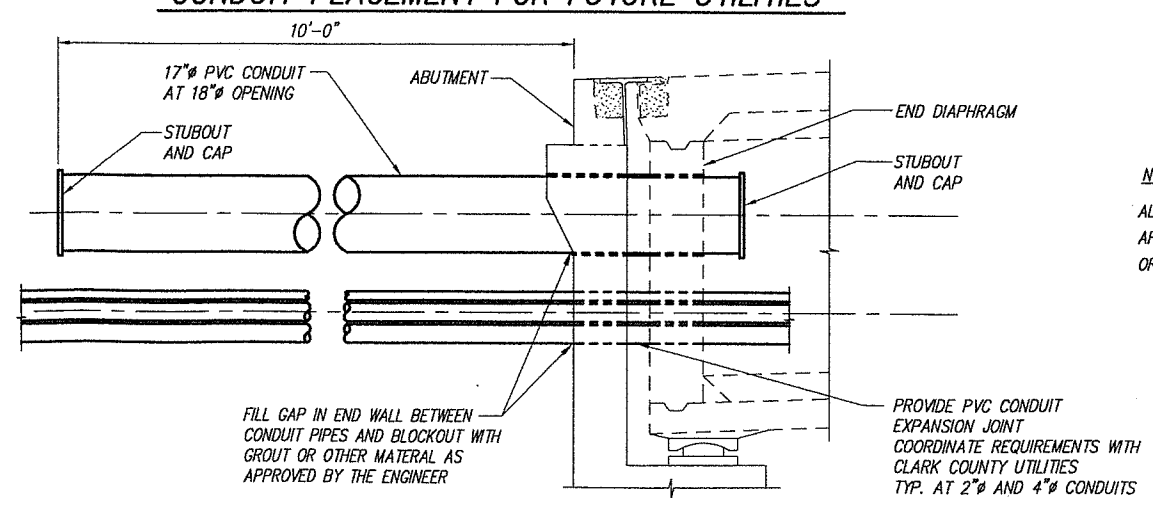

UTILITY CONDUIT PLACEMENT DETAIL

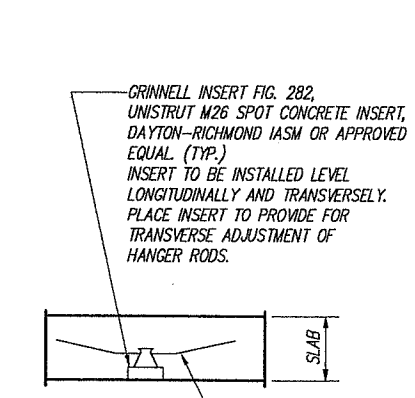

DETAIL D

NOTE:

ALL MATERIALS SHALL BE GALVANIZED AFTER FABRICATION PER AASHTO M 111 OR AASHTO M 232.

Fed. Aid No.
STPF-4253(010)

DESIGNED C. TOTTEN
DRAWN J. WILKES
CRP 392922
HOR. N/A
VERT. N/A
DATE FEB. 20, 2004
DWG: S70
SHEET 72 OF 78

CALL 48 HOURS BEFORE YOU DIG 1-800-553-4344 "It's the Law"
CLARK COUNTY UTILITIES COORDINATING COUNCIL

DESIGN & ENGINEERING DIVISION
NE 20TH AVE/HGWY 99 REALIG.
CLARK COUNTY
UTILITY HANGER DETAILS

STATE OF WASHINGTON
SALAM H. HASWEH
22903
REGISTERED PROFESSIONAL ENGINEER
2/19/04
REVISED 2/20/2004

OTAK Incorporated
100 W. Evergreen Blvd., Suite 100
Vancouver, WA 98660-3183
Phone: (360) 737-8693
FAX: (360) 737-9651

kpff Consulting Engineers
111 SW 5th Avenue
Suite 2500
Portland, Oregon 97204
503-227-3251

proud past, promising future
CLARK COUNTY
WASHINGTON

DATE & TIME	UPDATED BY	PLOT SCALE	'PCP' FILE	PLOT VIEW
2:13:20 PM	DIEMT	1:1 (1:2)		PLOT

JOB #	JOB NAME	FILE PATH & NAME	PLOTTED DATE & TIME
99680	N.E. 20 th AVE HIGHWAY 99 V.	\BRIDGE H-P\N.E. HIGHWAY 99 (99406)\INCOMING\08-03-01\99680-S35.DWG	AUG. 04, 2001 2:13:20 PM

NOTES:
XREFS: X99680,

CALL 48 HOURS BEFORE YOU DIG 1-800-553-4344 "It's the Law" CLARK COUNTY UTILITIES COORDINATING COUNCIL

DESIGN & ENGINEERING DIVISION
NE 20TH AVE/HGWY 99 REALIG, CLARK COUNTY
BAR LIST I

EXPIRES 2/9/2006

otak INCORPORATED
105 W. Evergreen Blvd., Suite 500
Vancouver, WA 98660-5125
Phone: (360) 737-9613
FAX: (360) 737-9651

kpff Consulting Engineers
111 SW 5th Avenue
Suite 2500
Portland, Oregon 97204
503-227-3251

CLARK COUNTY WASHINGTON
Proud past, promising future

Fed. Aid No. STPF-4253(010)

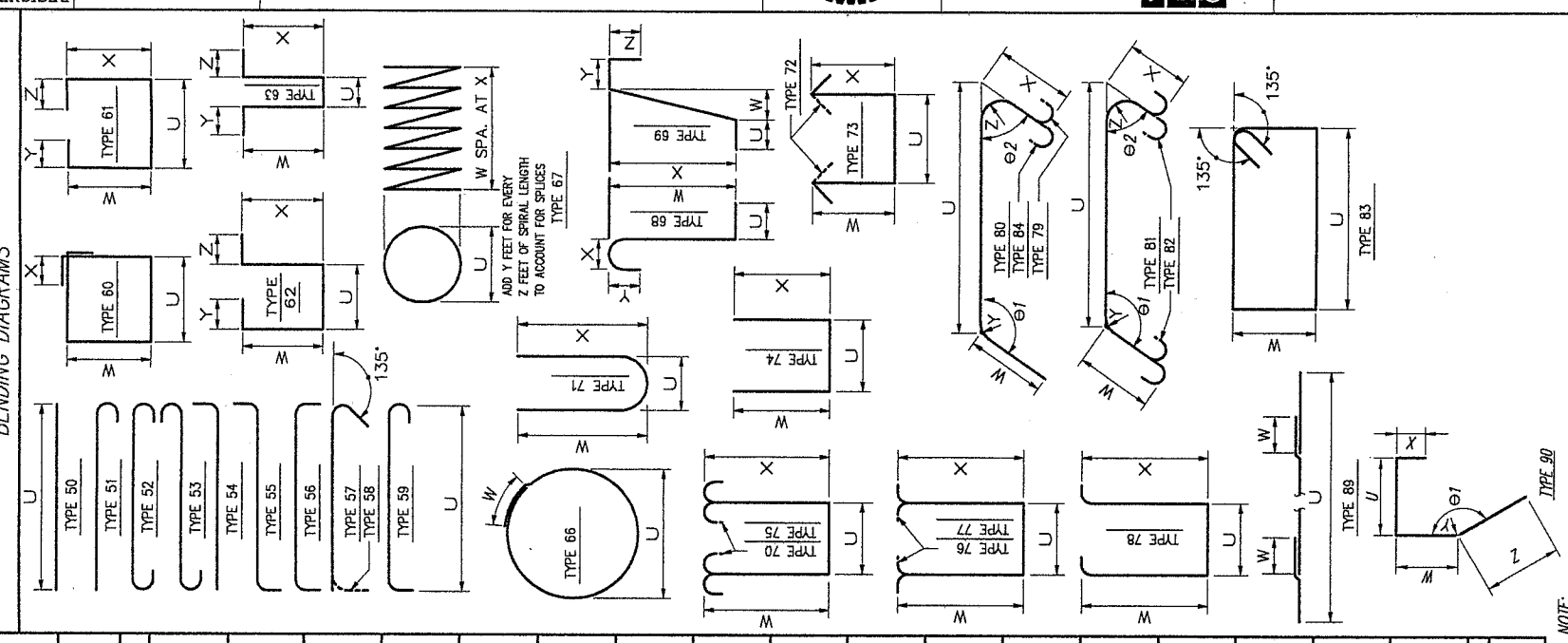

NOTE:
1. ALL REINFORCING BARS ON THIS SHEET SHALL BE AASHTO M-31 UNLESS SHOWN OTHERWISE.
2. REINFORCING FOR TRAFFIC BARRIERS AND GIRDERS NOT SHOWN IN THIS BAR LIST. SEE TRAFFIC BARRIER SHEET AND GIRDER SHEET.
3. BEND FOR TRANSVERSE BARS DUE TO ROADWAY CROWN CONDITIONS HAVE NOT BEEN SHOWN. THESE BARS SHALL BE BENT AS REQUIRED TO CONFORM TO THE CONFIGURATION OF THE STRUCTURE.
4. NUMBER AND LENGTH OF BARS TO BE DETERMINED BY THE CONTRACTOR FROM PLANS.

E = Bar is to be epoxy coated.
V = Bar dimensions vary between dimensions shown on this line and the following line.
S = Bar is included in substructure quantities.
F = Bar to be field welded.
T = Tie or Stirrup.

MARK NO.	LOCATION	SIZE	NUMBER REQ'D	BEND TYPE	TIE OR STIR.	FLD. WELD	SUBSTR.	EPOXY COAT	VARIES	NO. EACH	DIMENSIONS (Out to Out) U Ft.	U In.	W Ft.	W In.	X Ft.	X In.	Y Ft.	Y In.	Z Ft.	Z In.	θ1 Deg.	θ2 Deg.	LENGTH Ft.	LENGTH In.	WEIGHT Lbs.
	PIER 2																								
16	Pile Cap Hoops	4	28	66			S				2	0	2	0									8	3	155
17	Transverse Stop Vert	6	18	59			S				5	6											7	2	194
59	Transverse Stop Horiz	6	3	60			S				4	3	4	9	1	0					45	135	20	0	91
19	Utility Penetration	6	2	60			S				3	7	1	10	1	0							12	10	39
60	Wing Bot Horiz	8	2	50			S				19	6											19	6	105
61	Wing Top Horiz	8	2	50			S				20	0											20	0	107
62	Wing Horiz	8	8	50			S		V		19	6											19	9	422
											20	0													
63	Vert Wing	6	20	54			S		V		11	0											12	0	360
											9	10													
64	Vert Wing	5	12	50			S		V		6	9											5	6	70
65	Vert Wing	4	12	50			S		V		4	4											5	6	45
											6	9													
											4	4													
66	Wing Horiz	4	8	50			S		V		19	6											19	9	106
											20	0													
	PIER 2																								
201	Column West Long.	11	30	50			S				33	3											33	3	5300
202	Column East Long.	11	40	50			S				33	6											33	6	7120
203	Column West Spiral	5	1	67			S				4	3	133	0	0	3	5	0	40	0			2036	3	2124
204	Column East Spiral	5	1	67			S				4	3	134	0	0	3	5	0	40	0			2051	1	2140
211	Drilled Shaft W. Long.	11	40	89			S				67	2	6	5									73	7	15638
212	Drilled Shaft E. Long.	11	40	89			S				70	1	6	5									76	6	16258
213	Drilled Shaft W. Spiral	5	1	67			S				6	6	49	0	0	3	5	0	40	0			1208	9	1261
214	Drilled Shaft E. Spiral	5	1	67			S				6	6	49	0	0	3	5	0	40	0			1208	9	1261
215	Drilled Shaft W. Spiral	5	1	67			S				6	6	110	0	0	6	5	0	40	0			2605	9	2718
216	Drilled Shaft E. Spiral	5	1	67			S				6	6	116	0	0	6	5	0	40	0			2742	10	2861
	PIER 3																								
301	Column West Long.	11	30	50			S				35	4											35	4	5632
302	Column East Long.	11	30	50			S				36	9											36	9	5858
303	Column West Spiral	5	1	67			S				4	3	142	0	0	3	5	0	40	0			2170	0	2264
304	Column East Spiral	5	1	67			S				4	3	147	0	0	3	5	0	40	0			2244	4	2341
311	Drilled Shaft W. Long.	11	40	89			S				74	3	6	5									80	8	17144
312	Drilled Shaft E. Long.	11	40	89			S				81	3	6	5									87	8	18631
313	Drilled Shaft W. Spiral	5	1	67			S				6	6	49	0	0	3	5	0	40	0			1208	9	1261
315	Drilled Shaft E. Spiral	5	1	67			S				6	6	49	0	0	3	5	0	40	0			1208	9	1261
314	Drilled Shaft W. Spiral	5	1	67			S				6	6	124	0	0	6	5	0	40	0			2925	9	3052
316	Drilled Shaft E. Spiral	5	1	67			S				6	6	138	0	0	6	5	0	40	0			3245	9	3386
	PIER 4																								
401	Column West Long.	11	30	50			S				30	1											30	1	4795
402	Column East Long.	11	30	50			S				32	10											32	10	5234
403	Column West Spiral	5	1	67			S				4	3	121	0	0	3	5	0	40	0			1857	11	1938
404	Column East Spiral	5	1	67			S				4	3	132	0	0	3	5	0	40	0			2021	4	2109
411	Drilled Shaft W. Long.	11	40	89			S				65	4	6	5									71	9	15249

STEEL REINFORCING BAR QUANTITIES NOT INCLUDED IN THIS BAR LIST

E = Bar is to be epoxy coated.
V = Bar dimensions vary between dimensions shown on this line and the following line.
S = Bar is included in substructure quantities.
F = Bar to be field welded.
T = Tie or Stirrup.

MARK NO.	LOCATION	SIZE	NUMBER REQ'D	BEND TYPE	TIE OR STIR.	FLD. WELD	SUBSTR.	EPOXY COAT	VARIES	NO. EACH	DIMENSIONS (Out to Out) U Ft.	U In.	W Ft.	W In.	X Ft.	X In.	Y Ft.	Y In.	Z Ft.	Z In.	θ1 Deg.	θ2 Deg.	LENGTH Ft.	LENGTH In.	WEIGHT Lbs.
	PIER 1 – WEST																								
1	Pile Cap Botts. Longit.	6	7	50			S				40	3											40	3	424
2	Pile Cap T & B Transv	5	56	50			S				7	0											7	0	409
3	Pile Cap Top Longit	5	6	50			S				40	3											40	0	252
4	Pedestal Longit	4	4	50			S				34	10											34	10	94
5	Pedestal Longit	7	5	54			S				34	10											36	0	368
6	Pedestal Transv	4	42	69			S				0	8	0	0	4	1	4	2	0	8			9	7	269
7	Backwall BF Vert	6	29	54			S				11	0											12	0	523
8	Backwall BF Vert	6	11	54			S				11	7											12	7	208
9	Backwall FF Vert	4	26	54			S				11	0											11	8	203
10	Backwall FF Vert	4	8	54			S				11	7											12	3	66
11	Backwall Walk Horiz	4	2	50			S				8	2											8	2	11
12	Backwall Horiz	4	14	50			S		V		35	0											34	6	323
											34	0													
13	Pavement Seat	4	2	50			S				34	0											34	0	46
14	Pavement Seat	5	35	90			S				1	3	0	10	0	10	1	6	2	0	150		4	11	235
16	Pile Cap Hoops	4	24	66			S				2	0	2	0									8	3	133
17	Transverse Stop Vert	6	18	59			S				5	6											7	2	194
18	Transverse Stop Horiz	6	3	60	S		S		V		6	2	3	1	1	0							18	15	83
											3	0													
19	Utility Penetration	6	2	60	S		S				3	7	1	10	1	0							12	10	39
20	Wing Horiz	8	18	51			S				10	9											11	8	561
21	Wing Horiz	5	6	51			S				10	9											11	4	71
22	Barrier Horiz	6	2	50			S				10	9											10	9	33
23	Near Face Vert	4	4	54			S				8	0											8	8	24
24	Near Face Vert	4	13	50			S				6	2											6	2	54
25	Far Face Vert	5	13	50			S				6	2											6	2	84
26	Wing Joint	6	16	69			S				1	6	0	0	2	6	1	6	0	0			5	6	133
27	Barrier Dowels	5	46	50			S				5	0											5	0	240
	PIER 1 – EAST																								
50	Pile Cap Botts. Longit.	6	7	50			S				46	3											46	3	487
2	Pile Cap T & B Transv	5	64	50			S				7	0											7	0	468
51	Pile Cap Top Longit	5	12	50			S				25	0											25	0	313
52	Pedestal Longit	4	4	50			S		V		39	6											41	0	110
53	Pedestal Longit	7	5	54			S		V		42	6											42	2	431
											39	6													
											42	6													
6	Pedestal Transv	4	50	69			S				0	8	0	0	4	1	4	2	0	8			9	7	321
7	Backwall BF Vert	6	31	54			S				11	0											12	0	559
8	Backwall BF Vert	6	11	54			S				11	7											12	7	208
54	Backwall BF Vert	6	5	54			S				10	11											11	11	90
9	Backwall FF Vert	4	28	54			S				11	0											11	8	219
10	Backwall FF Vert	4	8	54			S				11	7											12	3	66
55	Backwall FF Vert	4	4	54			S				10	11											11	7	31
56	Backwall Walk Horiz	4	2	50			S				8	2											8	2	11
57	Backwall Horiz	4	14	89			S		V		43	9	2	0									45	3	424
58	Pavement Seat	4	2	89			S				42	9	2	0									44	9	60
14	Pavement Seat	5	52	90			S				1	3	0	10	0	10	1	6	2	0	150		4	11	267

JOB #	JOB NAME	FILE PATH & NAME	PLOTTED DATE & TIME	UPDATED BY	PLOT SCALE	PLOT SET UP	P SPACE	VIEW	UCS	ORIGINAL 10	DISCARD OLD	# PRINTS	PRINTS 10
99680	Highway 99	D:\2-Projects\99680\99680-S70.DWG		J. Wilkes	1=1	1:1	YES						

XREFS:

S = Bar is included in substructure quantities.
F = Bar to be field welded.
T = Tie or Stirrup.
E = Bar is to be epoxy coated.
V = Bar dimensions vary between dimensions shown on this line and the following line.

MARK NO.	LOCATION	SIZE	NUMBER REQ'D	BEND TYPE	TIE OR STIR.	FLD. WELD	SUBSTR.	EPOXY COAT	VARIES	NO. EACH	U Ft.	U In.	W Ft.	W In.	X Ft.	X In.	Y Ft.	Y In.	Z Ft.	Z In.	Θ1 Deg.	Θ2 Deg.	LENGTH Ft.	LENGTH In.	WEIGHT Lbs.
411	Drilled Shaft E. Long.	11	40	89			S				65	4	6	5									71	9	15249
413	Drilled Shaft W. Spiral	5	1	67			S				6	6	49	0	0	3	5	0	40	0			1208	9	1261
413	Drilled Shaft E. Spiral	5	1	67			S				6	6	49	0	0	3	5	0	40	0			1208	9	1261
415	Drilled Shaft W. Spiral	5	1	67			S				6	6	107	0	0	6	5	0	40	0			2537	2	2647
415	Drilled Shaft E. Spiral	5	1	67			S				6	6	107	0	0	6	5	0	40	0			2537	2	2647
	PIER 2 W. CROSSBEAM																								
230	Top. Longitudianl	14	14	50							41	5											41	5	4436
231	Bot. Longitudinal	14	8	50							33	5											33	5	2046
232	Longitudinal	14	6	50							33	5											33	5	1534
233	Longitudinal	6	10	50							33	5											32	0	481
											29	11													
234	End bar	5	6	80							8	0	2	4	2	4	0	2	0	2	135	45	12	8	80
235	Long. Below Blockout	6	4	50							8	0											8	0	49
236	End bar	5	6	80							8	0	2	4	2	4	0	2	0	2	135	45	12	8	80
237	Long. Bars	14	2	50							33	5											33	5	512
238	Long. Bars	6	4	50							2	11											2	11	17
240	Stirrup	6	44	72	S						3	10	5	8	5	8							16	6	1090
241	Stirrup	6	96	80	S						5	8	3	9	0	8	0	3	0	3	90	45	10	1	1454
242	Stirrup	6	10	72	S						5	6	5	8	5	8							18	2	273
250	Tie	6	22	58	T						5	9											7	5	245
251	Tie	6	48	57	T						5	6											6	2	445
252	Tie	6	4	58	T						8	2											9	10	59
260	Stirrup	5	11	80	S						6	2	1	0	0	8	0	3	0	3	90	315	7	10	90
261	Stirrup	5	11	80	S						6	2	1	0	0	8	0	3	0	3	90	45	7	10	90
791	Dowel at interface	6	6	50							3	6											3	6	32
792	Dowel at interface	10	4	50							7	3											7	3	125
265	Stirrup at Opening	6	12	72	S						5	6	1	2	1	2							9	2	166
266	Stirrup at Opening	6	12	72	S						5	6	1	3	1	3							9	4	169
243	Stirrup at Column	6	10	74	S						5	8	5	1	5	5							16	2	243
	PIER 2 E. CROSSBEAM																								
270	Top. Longitudianl	14	14	50							44	3											44	3	4740
271	Bot. Longitudinal	14	8	50							36	3											36	3	2219
272	Longitudinal	14	6	50							36	3											36	3	1664
273	Longitudinal	6	10	50							36	3											34	1	511
											30	8													
274	End bar	5	6	80							8	0	2	4	2	4	0	2	0	2	135	45	12	8	80
275	Long. Below Blockout	6	4	50							8	0											8	0	49
276	End bar	5	6	80							8	0	2	4	2	4	0	2	0	2	135	45	12	8	80
277	Long. Bar	14	4	50							36	3											36	3	1110
278	Longitudinal	6	4	50							5	9											5	9	35
280	Stirrup	6	42	72	S						3	10	5	8	5	8							16	6	1041
281	Stirrup	6	96	80	S						5	8	3	9	0	8	0	3	0	3	90	45	10	1	1454
282	Stirrup	6	20	72	S						5	6	5	8	5	8							18	2	546
290	Tie	6	21	58	T						5	9											7	5	234
291	Tie	6	50	57	T						5	6											6	2	463
292	Tie	6	10	58	T						8	2											9	10	148
263	Stirrup	5	11	80	S						6	2	1	0	0	8	0	3	0	3	90	315	7	10	90
264	Stirrup	5	11	80	S						6	2	1	0	0	8	0	3	0	3	90	45	7	10	90

S = Bar is included in substructure quantities.
F = Bar to be field welded.
T = Tie or Stirrup.
E = Bar is to be epoxy coated.
V = Bar dimensions vary between dimensions shown on this line and the following line.

MARK NO.	LOCATION	SIZE	NUMBER REQ'D	BEND TYPE	TIE OR STIR.	FLD. WELD	SUBSTR.	EPOXY COAT	VARIES	NO. EACH	U Ft.	U In.	W Ft.	W In.	X Ft.	X In.	Y Ft.	Y In.	Z Ft.	Z In.	Θ1 Deg.	Θ2 Deg.	LENGTH Ft.	LENGTH In.	WEIGHT Lbs.
791	Dowel at interface	6	6	50							3	6											3	6	32
792	Dowel at interface	10	4	50							7	3											6	1	125
295	Stirrup at Opening	6	12	72	S						5	6	1	0	1	0							8	10	160
296	Stirrup at Opening	6	12	72	S						5	6	1	3	1	3							9	4	169
283	Stirrup at Column	6	10	74	S						5	8	5	1	5	5							16	2	243
	PIER 3 W. CROSSBEAM																								
330	Top. Longitudianl	14	14	50							37	2											37	2	3981
331	Bot. Longitudinal	14	8	50							29	2											29	2	1785
332	Longitudinal	14	6	50							29	2											29	2	1339
333	Longitudinal	6	10	50							29	2											27	9	418
											25	8													
334	End bar	5	6	80							8	0	2	4	2	4	0	2	0	2	135	45	12	8	80
335	Long. Below Blockout	6	4	50							8	0											8	0	49
336	End bar	5	6	80							8	0	2	4	2	4	0	2	0	2	135	45	12	8	80
338	Longitudinal	6	4	50							2	8											2	8	16
340	Stirrup	6	26	72	S						3	10	5	8	5	8							16	6	644
341	Stirrup	6	100	80	S						5	8	3	9	0	8	0	3	0	3	90	45	10	1	1515
342	Stirrup	6	8	72	S						5	6	5	8	5	8							18	2	218
350	Tie	6	13	58	T						5	9											7	5	145
351	Tie	6	50	57	T						5	6											6	2	463
352	Tie	6	4	58	T						8	2											9	10	59
360	Stirrup	5	11	80	S						6	2	1	0	0	8	0	3	0	3	90	315	7	10	90
361	Stirrup	5	11	80	S						6	2	1	0	0	8	0	3	0	3	90	45	7	10	90
791	Dowel at interface	6	6	50							3	6											3	6	32
792	Dowel at interface	10	4	50							7	3											7	3	125
365	Stirrup at Opening	6	12	72	S						5	6	1	2	1	2							9	2	166
366	Stirrup at Opening	6	12	72	S						5	6	1	3	1	3							9	4	169
343	Stirrup at Column	6	10	74	S						5	8	5	1	5	5							16	2	243
	PIER 3 E. CROSSBEAM																								
370	Top. Longitudianl	14	14	50							40	11											40	11	4383
371	Bot. Longitudinal	14	8	50							32	11											32	11	2015
372	Longitudinal	14	6	50							32	11											32	11	1511
373	Longitudinal	6	10	50					V		32	11											30	8	461
											27	11													
374	End bar	5	6	80							8	0	2	4	2	4	0	2	0	2	135	45	12	8	80
375	Long. Below Blockout	6	4	50							8	0											8	0	49
376	End bar	5	6	80							8	0	2	4	2	4	0	2	0	2	135	45	12	8	80
377	Long. Bar	14	4	50							32	11											32	11	1008
378	Long. Bar	6	4	50							5	11											5	11	36
380	Stirrup	6	34	72	S						3	10	5	8	5	8							16	6	843
381	Stirrup	6	84	80	S						5	8	3	9	0	8	0	3	0	3	90	45	10	1	1272
382	Stirrup	6	20	72	S						5	6	5	8	5	8							18	2	546
390	Tie	6	17	58	T						5	9											7	5	189
391	Tie	6	42	57	T						5	6											6	8	389
392	Tie	6	10	58	T						8	2											9	10	148
	STEEL REINFORCING BAR QUANTITIES NOT INCLUDED IN THIS BAR LIST																								

BENDING DIAGRAMS

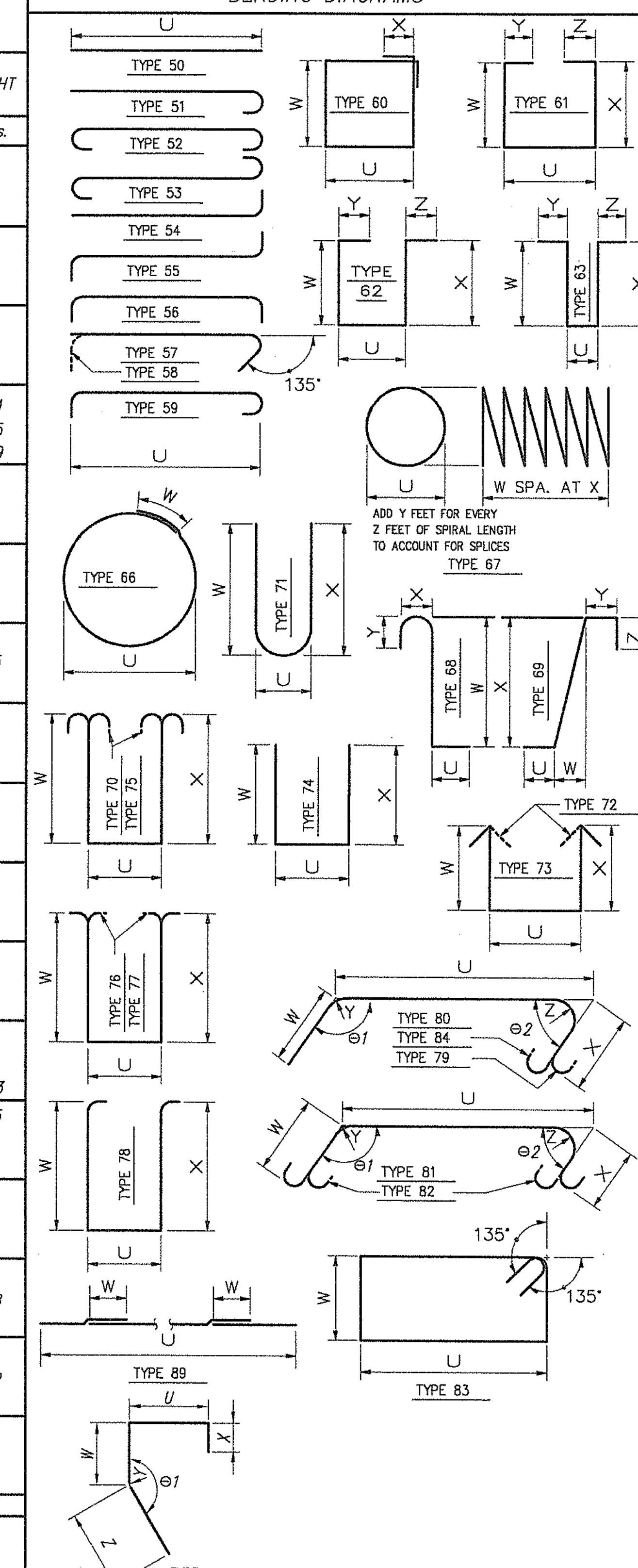

NOTE:

1. ALL REINFORCING BARS ON THIS SHEET SHALL BE AASHTO M-31 UNLESS SHOWN OTHERWISE.
2. REINFORCING FOR TRAFFIC BARRIERS AND GIRDERS NOT SHOWN IN THIS BAR LIST. SEE TRAFFIC BARRIER SHEET AND GIRDER SHEET.
3. BEND FOR TRANSVERSE BARS DUE TO ROADWAY CROWN CONDITIONS HAVE NOT BEEN SHOWN. THESE BARS SHALL BE BENT AS REQUIRED TO CONFORM TO THE CONFIGURATION OF THE STRUCTURE.
4. NUMBER AND LENGTH OF BARS TO BE DETERMINED BY THE CONTRACTOR FROM PLANS.

Fed. Aid No. STPF-4253(010)

DESIGNED	C. TOTTEN
DRAWN	J. WILKES
CRP	392922
HOR.	N/A
VERT.	N/A
DATE	FEB. 20, 2004
DWG:	S72
SHEET	74 OF 78

CALL 48 HOURS BEFORE YOU DIG 1-800-553-4344 "It's the Law" CLARK COUNTY UTILITIES COORDINATING COUNCIL

DESIGN & ENGINEERING DIVISION

NE 20TH AVE/HGWY 99 REALIG.
CLARK COUNTY
BAR LIST II

IZZAT H. HASAYEN — STATE OF WASHINGTON — REGISTERED PROFESSIONAL ENGINEER — EXPIRES 2/9/2006

otak Incorporated — 105 W. Evergreen Blvd., Suite 300 Vancouver, WA 98660-3123 Phone: (360) 737-9613 FAX: (360) 737-9651

kpff Consulting Engineers — 111 SW 5th Avenue Suite 2500 Portland, Oregon 97204 503-227-3251

CLARK COUNTY WASHINGTON — proud past, promising future

S = Bar is included in substructure quantities.
F = Bar to be field welded.
T = Tie or Stirrup.
E = Bar is to be epoxy coated.
V = Bar dimensions vary between dimensions shown on this line and the following line.

MARK NO.	LOCATION	SIZE	NUMBER REQ'D	BEND TYPE	TIE OR STIR.	FLD. WELD	SUBSTR.	EPOXY COAT	VARIES	NO. EACH	U Ft.	U In.	W Ft.	W In.	X Ft.	X In.	Y Ft.	Y In.	Z Ft.	Z In.	Θ1 Deg.	Θ2 Deg.	LENGTH Ft.	LENGTH In.	WEIGHT Lbs.
363	Stirrup	5	11	80	S						6	2	1	0	0	8	0	3	0	3	90	315	7	10	90
364	Stirrup	5	11	80	S						6	2	1	0	0	8	0	3	0	3	90	45	7	10	90
791	Dowel at interface	6	6	50							3	6											3	6	32
792	Dowel at interface	10	4	50							7	3											7	3	125
395	Stirrup at Opening	6	12	72	S						5	6	1	0	1	0							8	10	160
396	Stirrup at Opening	6	12	72	S						5	6	1	3	1	3							9	4	169
383	Stirrup at Column	6	10	74	S						5	8	5	1	5	5							16	2	243
	PIER 4 W. CROSSBEAM																								
430	Top. Longitudianl	14	14	50							25	9											25	9	2758
431	Bot. Longitudinal	14	8	50							17	9											17	9	1087
432	Longitudinal	14	6	50							17	9											17	9	815
433	Longitudinal	6	10	50							17	9											16	4	246
											14	3													
434	End bar	5	6	80							8	0	2	4	2	4	0	2	0	2	135	45	12	8	80
435	Long. Below Blockout	6	4	50							8	0											8	0	49
436	End bar	5	6	80							8	0	2	4	2	4	0	2	0	2	135	45	12	8	80
438	End bar	6	4	50							2	11											2	11	18
441	Stirrup	6	48	80	S						5	8	3	9	0	8	0	3	0	3	90	45	10	1	727
442	Stirrup	6	12	72	S						5	6	5	8	5	8							18	2	328
443	Stirrup	6	7	72	S				V		5	1	5	8	5	8							15	5	163
											0	6	5	8	5	8									
451	Tie	6	24	57	T						5	6											6	2	222
452	Tie	6	6	58	T						8	2											9	10	89
453	Tie	6	7	58	T				V		5	1											4	5	47
											0	6													
460	Stirrup	5	11	80	S						6	2	1	0	0	8	0	3	0	3	90	315	7	10	90
461	Stirrup	5	11	80	S						6	2	1	0	0	8	0	3	0	3	90	45	7	10	90
791	Dowel at interface	6	6	50							3	6											3	6	32
792	Dowel at interface	10	4	50							7	3											7	3	125
465	Stirrup at Opening	6	12	72	S						5	6	1	2	1	2							9	2	166
466	Stirrup at Opening	6	12	72	S						5	6	1	3	1	3							9	4	169
444	Stirrup at Column	6	8	74	S						5	8	5	1	5	5							16	2	194
	PIER 4 E. CROSSBEAM																								
470	Top. Longitudianl	14	14	50							35	10											35	10	3838
471	Bot. Longitudinal	14	8	50							27	10											27	10	1704
472	Longitudinal	14	6	50							27	10											27	10	1278
473	Longitudinal	6	10	50							27	10											25	7	385
											22	3													
474	End bar	5	6	80							8	0	2	4	2	4	0	2	0	2	135	45	12	8	80
475	Long. Below Blockout	6	4	50							8	0											8	0	49
476	End bar	5	6	80							8	0	2	4	2	4	0	2	0	2	135	45	12	8	80
478	Longitudinal	6	4	50							5	11											5	11	36
480	Stirrup	6	24	72	S						3	10	5	8	5	8							16	6	595
481	Stirrup	6	48	80	S						5	8	3	9	0	8	0	5	0	5	90	135	10	1	727

S = Bar is included in substructure quantities.
F = Bar to be field welded.
T = Tie or Stirrup.
E = Bar is to be epoxy coated.
V = Bar dimensions vary between dimensions shown on this line and the following line.

MARK NO.	LOCATION	SIZE	NUMBER REQ'D	BEND TYPE	TIE OR STIR.	FLD. WELD	SUBSTR.	EPOXY COAT	VARIES	NO. EACH	U Ft.	U In.	W Ft.	W In.	X Ft.	X In.	Y Ft.	Y In.	Z Ft.	Z In.	Θ1 Deg.	Θ2 Deg.	LENGTH Ft.	LENGTH In.	WEIGHT Lbs.
482	Stirrup	6	24	72	S						5	6	5	8	5	8							18	2	655
483	Stirrup	6	9	72	S				V		5	3	5	8	5	8							15	7	211
											0	7	5	8	5	8									
490	Tie	6	12	58	T						5	9											7	5	134
491	Tie	6	24	57	T						5	6											6	2	222
492	Tie	6	12	58	T						8	2											9	10	178
493	Tie	6	9	58	T				V		5	3											4	7	62
											0	7													
463	Stirrup	5	11	80	S						6	2	1	0	0	8	0	3	0	3	90	315	7	10	90
464	Stirrup	5	11	80	S						6	2	1	0	0	8	0	3	0	3	90	45	7	10	90
791	Dowel at interface	6	6	50							3	6											3	6	32
792	Dowel at interface	10	4	50							7	3											7	3	125
495	Stirrup at Opening	6	12	72	S						5	6	1	0	1	0							8	10	160
496	Stirrup at Opening	6	12	72	S						5	6	1	3	1	3							9	4	169
484	Stirrup at Column	6	12	74	S						5	8	5	1	5	5							16	2	291
	PIER 5 – WEST																								
501	Pile Cap Bot. Longit.	6	7	50			S				28	3											28	3	298
502	Pile Cap T & B Transv	5	40	50			S				7	0											7	0	293
503	Pile Cap Top Longit	5	6	50			S				28	3											28	3	177
550	Pedestal Longit	4	4	50			S		V		23	6											22	0	59
											20	6													
551	Pedestal Longit	7	5	54			S		V		23	6											23	2	237
											20	6													
506	Pedestal Transv	4	25	69			S				0	8	0	0	4	1	4	2	0	8			9	7	161
507	Backwall BF Vert	6	17	54			S				11	0											12	0	307
508	Backwall BF Vert	6	11	54			S				11	7											12	7	208
552	Backwall BF Vert	6	4	54			S				10	11											11	11	72
509	Backwall FF Vert	4	13	54			S				11	0											11	8	101
510	Backwall FF Vert	4	8	54			S				11	7											12	3	66
553	Backwall FF Vert	4	4	54			S				10	11											11	7	31
554	Backwall Walk Horiz	4	2	50			S				8	2											8	2	11
555	Backwall Horiz	4	14	50			S		V		24	9											24	3	227
											23	9													
556	Pavement Seat	4	2	50			S				23	9											23	9	32
514	Pavement Seat	5	29	90			S				1	3	0	10	0	10	1	6	2	0	150		4	11	149
516	Pile Cap Hoops	4	16	66			S				2	0	2	0									8	3	89
517	Transverse Stop Vert	6	18	59			S				5	6											7	2	194
557	Transverse Stop Horiz	6	3	60			S				4	3	4	9	1	0							20	0	90
519	Utility Penetration	6	2	60			S				3	7	1	10	1	0							12	10	39
558	Wing Bot Horiz	8	2	50			S				19	6											19	6	105
559	Wing Top Horiz	8	2	50			S				20	0											20	0	107
560	Wing Horiz	8	9	50			S				19	6											19	6	469
561	Wing Vert	6	20	54			S		V		11	7											11	1	333
											8	7													

STEEL REINFORCING BAR QUANTITIES NOT INCLUDED IN THIS BAR LIST

Fed. Aid No.
STPF-4253(010)

BENDING DIAGRAMS

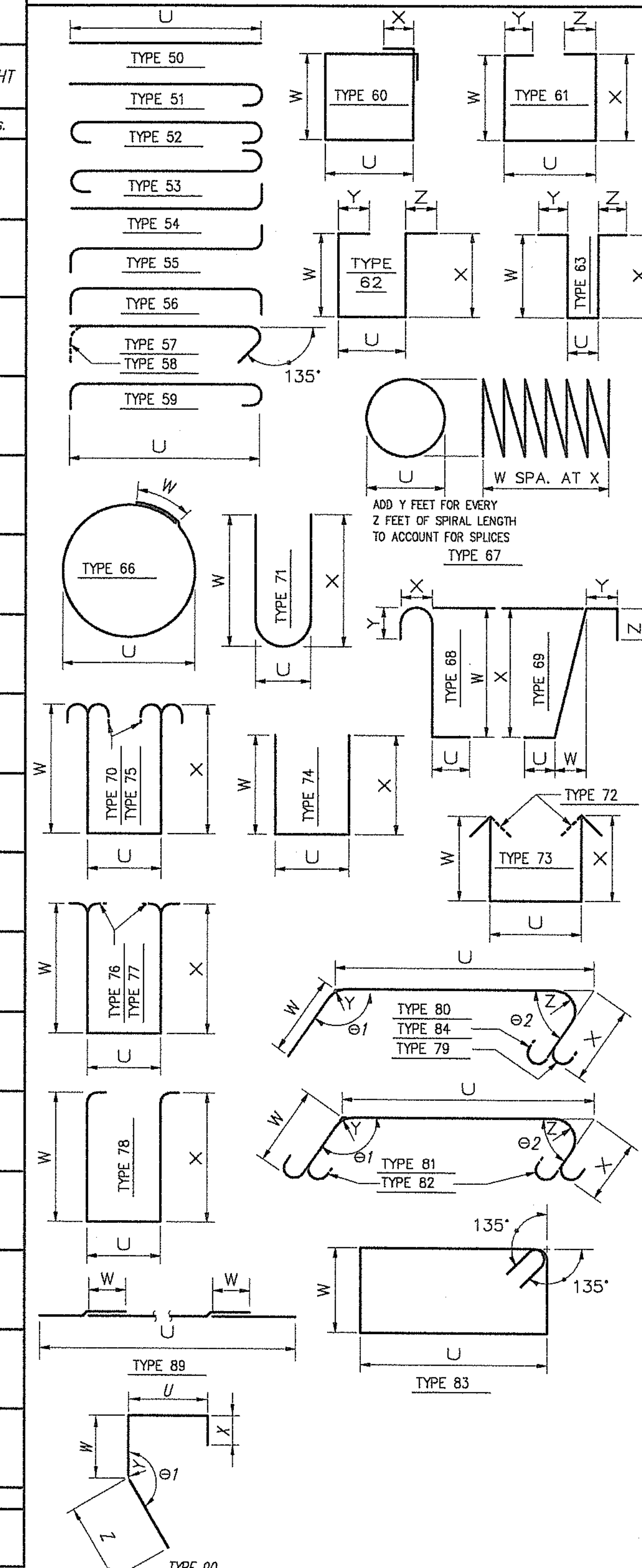

NOTE:

1. ALL REINFORCING BARS ON THIS SHEET SHALL BE AASHTO M-31 UNLESS SHOWN OTHERWISE.
2. REINFORCING FOR TRAFFIC BARRIERS AND GIRDERS NOT SHOWN IN THIS BAR LIST. SEE TRAFFIC BARRIER SHEET AND GIRDER SHEET.
3. BEND FOR TRANSVERSE BARS DUE TO ROADWAY CROWN CONDITIONS HAVE NOT BEEN SHOWN. THESE BARS SHALL BE BENT AS REQUIRED TO CONFORM TO THE CONFIGURATION OF THE STRUCTURE.
4. NUMBER AND LENGTH OF BARS TO BE DETERMINED BY THE CONTRACTOR FROM PLANS.

CLARK COUNTY WASHINGTON
proud past, promising future

otak Incorporated
105 W. Evergreen Blvd., Suite 300
Vancouver, WA 98660-3123
Phone: (360) 737-9613
FAX: (360) 737-9651

kpff Consulting Engineers
111 SW 5th Avenue Suite 2500
Portland, Oregon 97204
503-227-3251

IZZAT H. HASAYEN, STATE OF WASHINGTON, REGISTERED PROFESSIONAL ENGINEER
EXPIRES 2/9/2006

DESIGN & ENGINEERING DIVISION
NE 20TH AVE/HGWY 99 REALIG.
CLARK COUNTY
BAR LIST III

CALL 48 HOURS BEFORE YOU DIG
1-800-553-4344
"It's the Law"
CLARK COUNTY UTILITIES COORDINATING COUNCIL

DESIGNED C. TOTTEN
DRAWN J. WILKES
CRP 392922
HOR. N/A
VERT. N/A
DATE FEB. 20, 2004
DWG: S73

S = Bar is included in substructure quantities.
F = Bar to be field welded.
T = Tie or Stirrup.
E = Bar is to be epoxy coated.
V = Bar dimensions vary between dimensions shown on this line and the following line.

MARK NO.	LOCATION	SIZE	NUMBER REQ'D	BEND TYPE	TIE OR STIR.	FLD. WELD	SUBSTR.	EPOXY COAT	VARIES	NO. EACH	U Ft.	U In.	W Ft.	W In.	X Ft.	X In.	Y Ft.	Y In.	Z Ft.	Z In.	θ1 Deg.	θ2 Deg.	LENGTH Ft.	LENGTH In.	WEIGHT Lbs.
562	Wing Vert	5	12	50			S		V		6	9											5	5	68
											4	0													
563	Wing Vert	4	12	50			S		V		6	9											5	5	44
											4	0													
564	Wing Horiz	4	9	50			S		V		19	6											19	9	119
											20	0													
	PIER 5 – EAST																								
501	Pile Cap Bot. Longit.	6	7	50			S				28	3											28	3	298
502	Pile Cap T & B Transv	5	40	50			S				7	0											7	0	293
503	Pile Cap Top Longit	5	6	50			S				28	3											28	3	177
504	Pedestal Longit	4	4	50			S				27	4											27	4	74
505	Pedestal Longit	7	5	54			S				27	4											28	6	292
506	Pedestal Transv	4	34	69			S				0	8	0	0	4	1	4	2	0	8			9	7	218
507	Backwall BF Vert	6	20	54			S				11	0											12	0	361
508	Backwall BF Vert	6	11	54			S				11	7											12	7	208
509	Backwall FF Vert	4	18	54			S				11	0											11	8	141
510	Backwall FF Vert	4	8	54			S				11	7											12	3	66
511	Backwall Walk Horiz	4	2	50			S				8	2											8	2	11
512	Backwall Horiz	4	14	50			S		V		27	6											27	0	253
											26	6													
513	Pavement Seat	4	2	50			S				24	6											24	6	33
514	Pavement Seat	5	30	90			S				1	3	0	10	0	10	1	6	2	0	150		4	11	154
515	Backwall Ties	4	42	58	T		S				0	10											1	7	45
516	Pile Cap Hoops	4	16	66			S				2	0	2	0									8	3	89
517	Transverse Stop Vert	6	18	59			S				5	6											7	9	373
518	Transverse Stop Horiz	6	3	60	S		S		V		6	2	3	1	1	0							18	5	83
											3	0													
519	Utility Penetration	6	2	60	S		S				3	7	1	10	1	0							12	10	39
520	Wing Horiz	8	18	51			S				11	5											12	4	593
521	Wing Horiz	5	6	51			S				11	5											12	0	75
522	Barrier Horiz	6	2	50			S				10	9											10	9	33
523	Near Face Vert	4	4	54			S				9	3											9	11	27
524	Near Face Vert	4	13	50			S				6	2											6	2	54
525	Far Face Vert	5	13	50			S				6	2											6	2	84
526	Wing Joint	6	16	69			S				1	6	0	0	2	6	1	6					5	6	133
527	Barrier Dowels	5	46	50			S				5	0											5	0	240
	BOTTOM SLAB																								
599	Long East Span 3	11	8	80					V		32	4	20	6							180		52	10	2246
											32	4	20	6							179				
600	Long.	11	28	54							52	1											52	1	7748
601	Long. West Span 2	11	20	80					V		53	4	6	8							180		60	0	6376
											53	4	6	8							178				
602	Long. East Span 3	11	9	80					V		34	10	14	6							180		49	4	2359
											34	10	14	6							179				
603	Long. West Span 2	11	6	80							11	4	12	1							180		23	5	746
											11	4	12	1							179				
604	Long. West Span 2	11	6	80							14	9	29	9							180		44	6	1419
											14	9	29	9							178				
605	Long. West Span 2	11	12	50							17	2											17	2	1094
606	Long.	11	22	80					V		12	3	8	5							180		20	8	2416
											12	3	8	5							179				
607	Long.	11	32	80					V		42	0	8	5							180		50	5	8572
											42	0	8	5							175				
608	Long. West Span 2	11	20	80							20	5	11	4							180		31	9	3374
											20	5	11	4							175				
609	Long. West Span 2	11	12	80					V		8	5	17	2							180		25	7	1631
											8	5	17	2							178				
610	Long. West Span 2	11	9	80					V		29	9	7	10							180		37	7	1797
											29	9	7	10							178				
611	Long. East Span 2	11	14	80					V		32	4	12	7							180		44	11	3341

S = Bar is included in substructure quantities.
F = Bar to be field welded.
T = Tie or Stirrup.
E = Bar is to be epoxy coated.
V = Bar dimensions vary between dimensions shown on this line and the following line.

MARK NO.	LOCATION	SIZE	NUMBER REQ'D	BEND TYPE	TIE OR STIR.	FLD. WELD	SUBSTR.	EPOXY COAT	VARIES	NO. EACH	U Ft.	U In.	W Ft.	W In.	X Ft.	X In.	Y Ft.	Y In.	Z Ft.	Z In.	θ1 Deg.	θ2 Deg.	LENGTH Ft.	LENGTH In.	WEIGHT Lbs.
											32	4	12	7							179				
612	Long. West Span 3	11	12	80					V		2	0	53	4							180		55	4	3528
											2	0	53	4							178				
613	Long. West Span 3	11	12	80					V		18	9	11	4							180		30	1	1918
											18	9	11	4							175				
615	Long West Span 2	11	8	50							12	6											12	6	531
616	Long East Span 2	11	12	80					V		6	5	17	7							180		24	1	1535
											6	5	17	7							179				
617	Long. East Span 3	11	12	80					V		2	10	32	10							180		35	8	2274
											2	10	32	10							179				
618	Long. East Span 2	11	20	80					V		11	4	43	0							180		54	4	5773
											11	4	43	0							179				
619	Long.	11	20	50							80	9											54	9	5818
620	Long. West Span 3	11	8	80					V		12	1	31	9							180		43	10	1863
											12	1	31	9							178				
621	Long. East Span 2	11	12	80					V		8	5	18	9							180		27	2	1732
											8	5	18	9							179				
622	Long. West Span 3	11	8	80					V		11	4	22	10							180		34	2	1452
											11	4	22	10							178				
623	Long.	11	16	54							48	4											48	4	4109
624	Long. West Span 3	11	6	80					V		8	5	7	6							180		15	11	507
											8	5	7	6							178				
625	Long.	4	115	50							40	0											40	0	3073
626	Long.	4	20	50							35	0											35	0	468
627	Long. East Span 1	4	12	50							30	0											30	0	241
628	Long. East Span 3	4	8	50							25	0											25	0	134
629	Long. West Span 3	4	6	50							16	0											16	0	64
630	Long. West Span 3	4	9	50							11	0											11	0	66
631	Long.	4	18	80							10	0											10	0	120
632	Long. West Span 3	11	9	80					V		11	4	17	7							180		28	11	1383
											11	4	17	7							178				
633	Long. West Span 3	11	6	50							18	9											18	9	598
635	Long. West Span 3	4	8	50							20	0											20	0	107
639	Long.	4	24	54							12	0											12	0	192
640	Long.	4	27	54							35	9											35	9	645
641	Long. West Span 1	4	8	50							35	6											35	6	190
652	Long. East Span 2	11	12	80					V		17	3	11	4							180		28	7	1822
											17	3	11	4							179				
653	Long. East Span 2	11	6	80					V		6	11	8	5							180		15	4	489
											6	11	8	5							179				
654	Long.	11	12	80					V		7	3	11	4							180		18	7	1185
											7	3	11	4							178				
655	Long.	11	24	80					V		52	4	7	8							180		60	0	7651
											52	4	7	8							179				
656	Long. East Span 3	11	8	80					V		11	8	6	5							180		18	1	769
											11	8	6	5							179				
657	Long.	11	15	80					V		32	4	7	0							180		39	4	3135
											32	4	7	0							178				
658	Long. East Span 2	11	3	80					V		8	5	20	2							180		28	7	456
											8	5	20	2							179				
645	West Trans.	4	128	74							12	9	1	0									8	5	717
											2	0	1	0											
646	West Trans.	4	1240	74							12	9	1	0									13	9	11390
647	West Trans.	4	780	74							10	11	1	0									11	11	6210
648	Trans.	4	88	74					V		10	11	1	0									7	6	439
											2	0	1	0											
649	Trans.	4	136	74							13	9	1	0									8	11	807
											2	0	1	0											
650	Trans.	4	2092	74							13	9	1	0									14	9	20613
651	Trans.	4	96	74					V		10	0	1	0									7	0	449
											2	0	1	0											
637	Long. West Expansion	4	30	89					V		387	11	2	0									401	7	8048
											377	3	2	0											
638	Long. East Expansion	4	33	89					V		395	1	2	0									411	3	9066
											387	5	2	0											
659	Access Hatch	5	64	50							6	0											6	0	401

STEEL REINFORCING BAR QUANTITIES NOT INCLUDED IN THIS BAR LIST

Fed. Aid No. STPF-4253(010)

BENDING DIAGRAMS

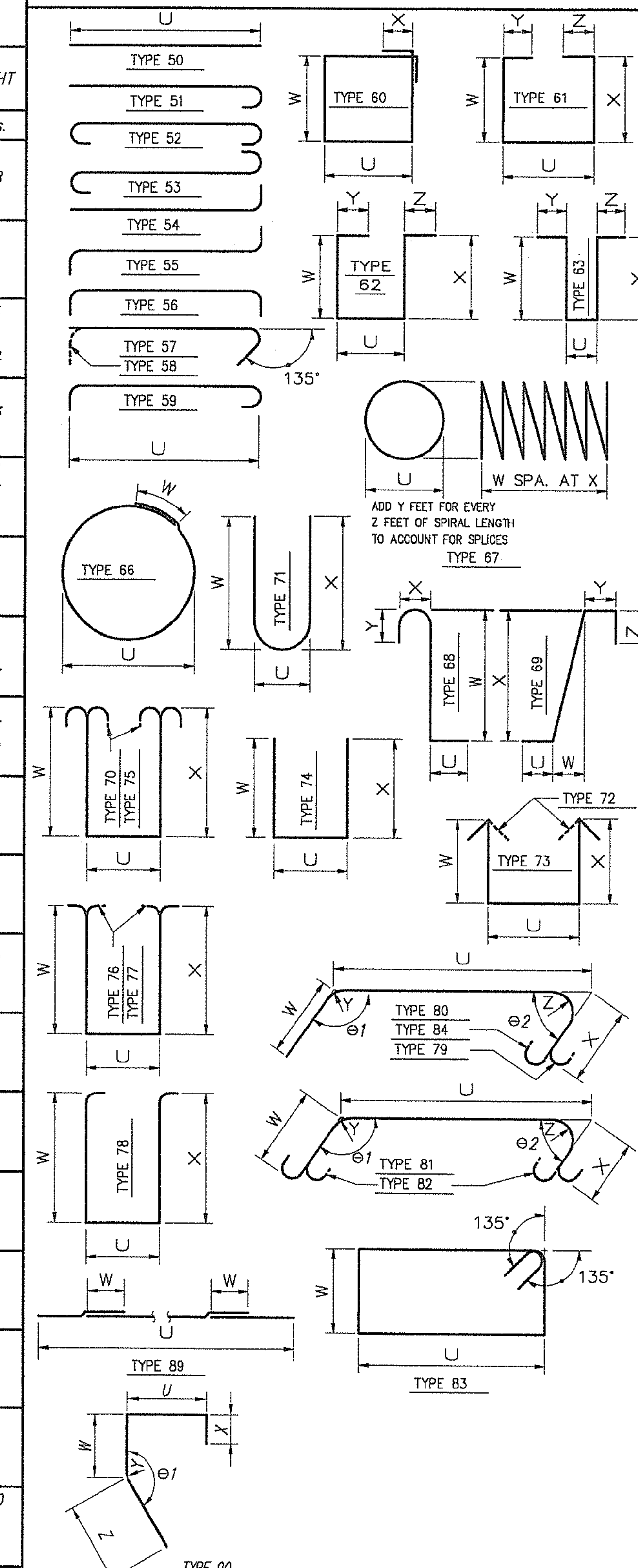

NOTE:

1. ALL REINFORCING BARS ON THIS SHEET SHALL BE AASHTO M-31 UNLESS SHOWN OTHERWISE.
2. REINFORCING FOR TRAFFIC BARRIERS AND GIRDERS NOT SHOWN IN THIS BAR LIST. SEE TRAFFIC BARRIER SHEET AND GIRDER SHEET.
3. BEND FOR TRANSVERSE BARS DUE TO ROADWAY CROWN CONDITIONS HAVE NOT BEEN SHOWN. THESE BARS SHALL BE BENT AS REQUIRED TO CONFORM TO THE CONFIGURATION OF THE STRUCTURE.
4. NUMBER AND LENGTH OF BARS TO BE DETERMINED BY THE CONTRACTOR FROM PLANS.

CLARK COUNTY WASHINGTON
proud past, promising future

otak Incorporated
105 W. Evergreen Blvd., Suite 300
Vancouver, WA 98660-3123
Phone: (360) 737-9613
FAX: (360) 737-9651

kpff Consulting Engineers
111 SW 5th Avenue Suite 2500
Portland, Oregon 97204
503-227-3251

IZZAT H. HASAYEN
STATE OF WASHINGTON
REGISTERED PROFESSIONAL ENGINEER
EXPIRES 2/9/2006

DESIGN & ENGINEERING DIVISION

NE 20TH AVE/HGWY 99 REALIG.

CLARK COUNTY

BAR LIST IV

CALL 48 HOURS BEFORE YOU DIG
1-800-553-4344
"It's the Law"
CLARK COUNTY UTILITIES COORDINATING COUNCIL

DESIGNED C. TOTTEN
DRAWN J. WILKES
CRP 392922
HOR. N/A
VERT. N/A
DATE FEB. 20, 2004
DWG: S74

S = Bar is included in substructure quantities.
F = Bar to be field welded.
T = Tie or Stirrup.
E = Bar is to be epoxy coated.
V = Bar dimensions vary between dimensions shown on this line and the following line.

MARK NO.	LOCATION	SIZE	NUMBER REQ'D	BEND TYPE	TIE OR STIR.	FLD. WELD	SUBSTR.	EPOXY COAT	VARIES	NO. EACH	U Ft.	U In.	W Ft.	W In.	X Ft.	X In.	Y Ft.	Y In.	Z Ft.	Z In.	Θ1 Deg.	Θ2 Deg.	LENGTH Ft.	LENGTH In.	WEIGHT Lbs.
	WEBS																								
675	Stirrups	5	7776	57	S						4	5											4	11	39876
676	Stirrups	5	3888	74	S						1	0	4	6									5	6	22304
677	Stirrups	5	3888	54	S						4	6											5	4	21626
678	Long.	8	80	50							60	0											60	0	12816
679	Long.	8	16	50							40	0											40	0	1709
680	Long.	8	16	50							32	0											32	0	1368
681	Long.	8	16	80					V		16	6	16	6							180		33	0	1410
											16	6	16	6							175				
682	Long.	8	8	50							36	6											36	6	780
683	Long.	8	8	80					V		16	6	19	3			0	4			180		35	9	764
											16	6	19	3			0	4			179				
684	Long.	6	336	50							60	0											60	0	30281
685	Long.	6	96	50							52	0											50	0	7210
686	Long.	6	64	50							40	0											40	0	3845
687	Long.	6	128	50							30	0											30	0	5768
688	Long.	6	480	50							8	8											8	8	7498
689	Long.	6	96	80					V		32	6	2	9							180		35	3	5083
											32	6	2	9							175				
691	Long.	6	48	80					V		32	6	2	9							180		35	3	2542
											32	6	2	9							179				
692	Long.	6	48	50							10	0											10	0	721
693	Long.	6	48	50							35	0											35	0	2524
	TOP SLAB																								
700	Trans. West Expansion	5	76	59				E	V		29	2											17	0	1348
											2	0													
701	Trans. West Expansion	5	76	50					V		22	4											12	2	965
											2	0													
702	Trans. West Expansion	5	483	80					V		1	3	7	7			0	2			95		6	0	3034
											1	3	2	0			0	2			95				
703	Trans. West Expansion	5	407	59				E			29	2											30	7	12983
704	Trans. West Expansion	5	407	50							18	7											21	1	8950
705	Trans. West Expansion	5	332	51				E			15	10											16	5	5685
706	Trans. West Expansion	5	332	54				E			15	10											16	8	5772
707	Trans. West Expansion	5	332	50					V		17	10											14	2	4906
											10	6													
708	Trans. West Expansion	5	332	80					V		1	3	7	7			0	2			98		5	10	2020
											1	3	4	0			0	2			107				
709	Trans. West Expansion	5	253	59				E			17	5											18	10	4970
710	Trans. West Expansion	5	253	50							10	6											10	6	2771
711	Trans. West Expansion	5	253	80							1	3	3	11			0	2			100		5	2	1364
712	Trans. West Expansion	5	47	51				E	V		10	0											6	7	323
											2	0													
713	Trans. West Expansion	5	47	54				E	V		10	0											6	10	335
											2	0													
714	Trans. West Expansion	5	47	50					V		14	3											8	2	399
											2	0													
715	Trans. West Expansion	5	7	80					V		1	3	3	11			0	2			100		4	3	31
											1	3	2	0			0	2			100				
720	Long.	11	234	50				E			60	0											60	0	74595

S = Bar is included in substructure quantities.
F = Bar to be field welded.
T = Tie or Stirrup.
E = Bar is to be epoxy coated.
V = Bar dimensions vary between dimensions shown on this line and the following line.

MARK NO.	LOCATION	SIZE	NUMBER REQ'D	BEND TYPE	TIE OR STIR.	FLD. WELD	SUBSTR.	EPOXY COAT	VARIES	NO. EACH	U Ft.	U In.	W Ft.	W In.	X Ft.	X In.	Y Ft.	Y In.	Z Ft.	Z In.	Θ1 Deg.	Θ2 Deg.	LENGTH Ft.	LENGTH In.	WEIGHT Lbs.
721	Long.	11	14	50				E			50	0											50	0	3719
722	Long.	11	22	50				E			40	0											40	0	4676
723	Long.	11	26	50				E			30	0											30	0	4145
724	Long.	11	68	50				E			20	0											20	0	7226
725	Long. West Expansion	11	9	80				E	V		25	6	4	6			0	7			180		30	0	1435
											25	6	4	6			0	7			175				
726	Long. West Expansion	11	3	80				E	V		15	6	4	6			0	7			180		20	0	319
											15	6	4	6			0	7			175				
729	Long.	11	47	74				E			9	8	5	7									15	3	3809
730	Long.	5	4	50				E			15	0											15	0	63
731	Long.	11	11	50				E			40	6											40	6	2367
740	Long. West Expansion	6	1	89							381	6	4	11									411	0	618
741	Long. East Expansion	6	1	89							395	1	4	11									429	6	646
743	Long. West Expansion	5	28	89				E	V		387	5	2	6									407	1	11889
											376	9	2	6											
744	Long. East Expansion	5	28	89				E	V		395	1	2	6									416	3	12156
											387	5	2	6											
747	Long.	5	2	50				E			12	4											12	4	26
748	Long.	5	3	50				E			25	4											25	4	80
749	Long.	5	2	80				E	V		7	5	9	2			0	2			175		16	1	34
											6	5	9	2			0	2			175				
750	Long.	5	163	50				E			40	0											40	0	6801
751	Long.	5	47	50				E			35	0											35	0	1716
752	Long.	5	25	50				E			30	0											30	0	783
753	Long.	5	20	50				E			25	0											25	0	522
754	Long.	5	23	50				E			20	0											20	0	480
755	Long.	5	10	50				E			15	0											15	0	156
756	Long.	5	7	50				E			10	0											10	0	74
757	Long. West Expansion	5	2	80				E	V		15	4	2	6			0	2			175		22	0	46
											16	10	9	4			0	2			175				
758	Long. West Expansion	5	11	80				E	V		8	0	24	6			0	2			180		32	6	
											8	0	24	6			0	2			175				373
759	Long.	5	6	80				E	V		8	0	14	6			0	2			180		27	6	173
											18	0	14	6			0	2			175				
760	Long. East Expansion	5	36	80				E	V		11	0	2	6			0	2			180		16	10	632
											21	9	2	6			0	2			179				
761	Long. East Expansion	5	10	50				E			36	2											36	2	378
762	Long. East Expansion	5	17	50				E			26	6											26	6	470
763	Long. West Expansion	5	17	80				E	V		8	0	24	6			0	2			180		32	6	
											8	0	24	6			0	2			175				577
764	Long. West Expansion	5	3	80				E	V		10	6	24	0			0	2			180		34	6	108
											10	6	24	0			0	2			177				
765	Long.	5	3	80				E	V		18	0	22	0			0	2			180		40	0	126
											18	0	22	0			0	2			175				
766	Long.	5	4	80				E	V		2	6	6	9			0	2			175		19	3	80
											2	6	28	5			0	2			175				
767	Long.	5	13	50				E			22	6											22	6	305
768	Long.	5	1	50				E			32	6											32	6	34
769	Long. East Expansion	5	18	80					V		1	3	8	2			0	2			94		6	4	119
											1	3	2	0			0	2			94				
STEEL REINFORCING BAR QUANTITIES NOT INCLUDED IN THIS BAR LIST																									

Fed. Aid No.
STPF-4253(010)

BENDING DIAGRAMS

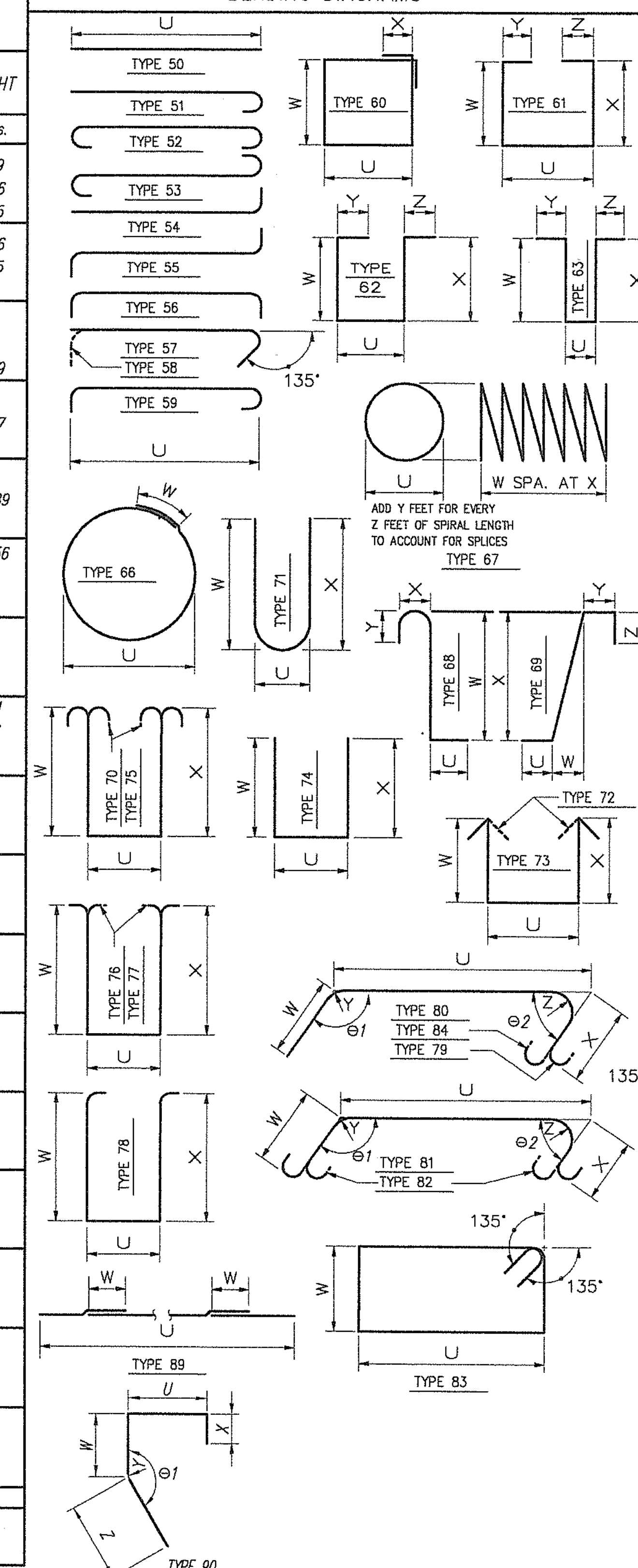

NOTE:

1. ALL REINFORCING BARS ON THIS SHEET SHALL BE AASHTO M-31 UNLESS SHOWN OTHERWISE.
2. REINFORCING FOR TRAFFIC BARRIERS AND GIRDERS NOT SHOWN IN THIS BAR LIST. SEE TRAFFIC BARRIER SHEET AND GIRDER SHEET.
3. BEND FOR TRANSVERSE BARS DUE TO ROADWAY CROWN CONDITIONS HAVE NOT BEEN SHOWN. THESE BARS SHALL BE BENT AS REQUIRED TO CONFORM TO THE CONFIGURATION OF THE STRUCTURE.
4. NUMBER AND LENGTH OF BARS TO BE DETERMINED BY THE CONTRACTOR FROM PLANS.

DESIGNED C. TOTTEN
DRAWN J. WILKES
CRP 392922
HOR. N/A
VERT. N/A
DATE FEB. 20, 2004
DWG: S75
SHEET 77 OF 78

CALL 48 HOURS BEFORE YOU DIG 1-800-553-4344 "It's the Law" CLARK COUNTY UTILITIES COORDINATING COUNCIL

DESIGN & ENGINEERING DIVISION
NE 20TH AVE/HGWY 99 REALIG.
CLARK COUNTY
BAR LIST V

IZZAT H. HASAYEN, STATE OF WASHINGTON, REGISTERED PROFESSIONAL ENGINEER, 20933, EXPIRES 2/9/2006, 2/19/04

otak Incorporated, 105 W. Evergreen Blvd., Suite 300, Vancouver, WA 98660-3123, Phone: (360) 737-9613, FAX: (360) 737-9651
kpff Consulting Engineers, 111 SW 5th Avenue, Suite 2500, Portland, Oregon 97204, 503-227-3251

CLARK COUNTY WASHINGTON — proud past, promising future

S = Bar is included in substructure quantities.
F = Bar to be field welded.
T = Tie or Stirrup.
E = Bar is to be epoxy coated.
V = Bar dimensions vary between dimensions shown on this line and the following line.

MARK NO.	LOCATION	SIZE	NUMBER REQ'D	BEND TYPE	TIE OR STIR.	FLD. WELD	SUBSTR.	EPOXY COAT	VARIES	NO. EACH	U Ft.	U In.	W Ft.	W In.	X Ft.	X In.	Y Ft.	Y In.	Z Ft.	Z In.	Θ1 Deg.	Θ2 Deg.	LENGTH Ft.	LENGTH In.	WEIGHT Lbs.
770	Trans. East Expansion	5	82	51				E	V		16	6											10	1	863
											2	6													
771	Trans. East Expansion	5	82	54				E	V		16	6											10	4	884
											2	6													
772	Trans. East Expansion	5	82	50					V		14	5											8	3	706
											2	0													
773	Trans. East Expansion	5	208	59				E			30	5											31	10	6906
774	Trans. East Expansion	5	208	50							19	1											19	1	4140
775	Trans. East Expansion	5	765	51				E			16	6											17	1	13631
776	Trans. East Expansion	5	765	54				E			16	6											17	4	13830
777	Trans. East Expansion	5	765	50					V		19	2											16	8	13299
											14	2													
778	Trans. East Expansion	5	765	80					V		1	3	8	2			0	2			94		8	2	6550
											1	3	5	9			0	2			94				
779	Trans. East Expansion	5	62	59				E	V		23	0											13	11	900
											2	0													
780	Trans. East Expansion	5	62	50					V		17	11											10	0	647
											2	0													
781	Trans. East Expansion	5	62	80					V		1	3	5	9			0	2			96		5	2	334
											1	3	2	0			0	2			96				
782	Long. East Expansion	5	516	80					V		1	4	4	0	4	5	0	2	0	2	166	173	9	4	5023
											0	9	4	0	4	5	0	2	0	2	166	173			
783	Trans. East Expansion	5	208	80							1	3	8	2			0	2			94		9	5	2043
	END DIAPHRAGM																								
909	End Diaphragm	4	24	54							2	0											2	8	43
910	End Diaphragm	4	12	55							1	2											2	6	21
911	End Diaphragm	4	24	80							2	9	1	0	1	7	0	2	0	2	46	225	5	4	86
912	End Diaphragm	4	12	80							2	11	1	0			0	2			45		3	11	32
913	End Diaphragm	4	12	69							2	0	1	7	1	7	1	0					5	3	42
914	End Diaphragm	4	12	80							2	9	1	0	1	0	0	2	0	2	90	135	4	9	39
920	Stirrups	4	106	56							6	2											7	6	532
921	Long.	4	32	50					V		36	5											28	5	608
											17	10													
922	Long.	8	8	50					V		36	5											28	5	593
											17	10													
923	Reinf. At Openings	4	24	50							4	9											4	9	77
924	Reinf. At Openings	4	16	50							5	11											5	11	64
926	Stirrups	4	106	55	S						6	2											6	11	490
927	Ties	4	14	62	T						0	9	1	4	1	4	0	8	0	8			4	9	44
928	Ties	4	12	62	T						0	9	1	6	1	6	0	8	0	8			5	1	41
929	Ties	4	26	62	T						0	9	1	5	1	5	0	8	0	8			4	11	86
930	Long.	8	8	50				E	V		42	10											34	10	744
											24	3													
	INTERFACE																								
742	Top. Long.	6	2	89				E			387	11	3	4									407	11	1225
785	Dowels to Barrier	5	1031	54				E			2	3											3	1	3316
786	Dowels to Barrier	4	516	54							1	10											2	6	862

S = Bar is included in substructure quantities.
F = Bar to be field welded.
T = Tie or Stirrup.
E = Bar is to be epoxy coated.
V = Bar dimensions vary between dimensions shown on this line and the following line.

MARK NO.	LOCATION	SIZE	NUMBER REQ'D	BEND TYPE	TIE OR STIR.	FLD. WELD	SUBSTR.	EPOXY COAT	VARIES	NO. EACH	U Ft.	U In.	W Ft.	W In.	X Ft.	X In.	Y Ft.	Y In.	Z Ft.	Z In.	Θ1 Deg.	Θ2 Deg.	LENGTH Ft.	LENGTH In.	WEIGHT Lbs.
790	Dowels to Existing Str.	4	948	54							0	10											1	6	950
793	Dowels to Existing Str.	5	80	50							3	0											3	0	251
794	Bot. Dowels At Closure	4	962	54							2	4											3	0	1928
795	Bot. Long. At Closure	6	2	89							387	11	2	0									399	11	1201
798	Sidewalk Long.	4	10	89				E			391	0	2	0									411	0	2746
799	Sidewalk Trans.	4	524	56				E			5	9											7	1	2480
	EXIST. ABUT. WIDENING																								
197	Long.	4	8	50							91	4											91	4	489
198	Vert.	4	184	74							2	1	0	6	0	6							3	1	379
199	Dowels	4	368	51							0	11											1	5	349
	RETAINING WALLS																								
800	Barrier Vert.	4	112	50							3	6											3	6	262
801	Barrier Vert.	5	221	50							5	6											5	6	1268
	INTER. DIAPHRAGMS																								
900	Long. Reinf.	6	24	50					V		36	4											26	7	957
											16	9													
901	Long. Reinf.	4	120	50					V		36	4											24	0	1924
											12	2													
902	Ties at Opening	4	66	63	T				V		0	5	0	6	0	6	0	8	0	8			3	5	151
											0	5	1	3	1	3	0	8	0	8					
903	Stirrup	4	514	56	T				V		5	4											6	11	2375
											5	10													
904	Ties at Opening	4	66	60	T						0	6	0	6		4							2	8	118
905	Trim Reinf.	4	24	50							8	11											8	11	143
906	Trim Reinf.	4	24	50							9	7											9	7	154
907	Horiz. Ties	4	30	80							0	8	2	4	2	4	0	2	0	2	136	45	5	4	107
	EXPANSION JOINT																								
190	VERT. DOWELL	4	138	54							1	2											1	10	169
	UTILITIES																								
999	HANGER INSERT	3	275	50							2	6											2	6	360
	DRAIN																								
1001	DOWEL	3	12	51							1	4											1	9	8
	STEEL REINFORCING BAR QUANTITIES NOT INCLUDED IN THIS BAR LIST																								
	PEDESTRIAN BARRIER																								19830
	RETAINING WALL																								9400

BENDING DIAGRAMS

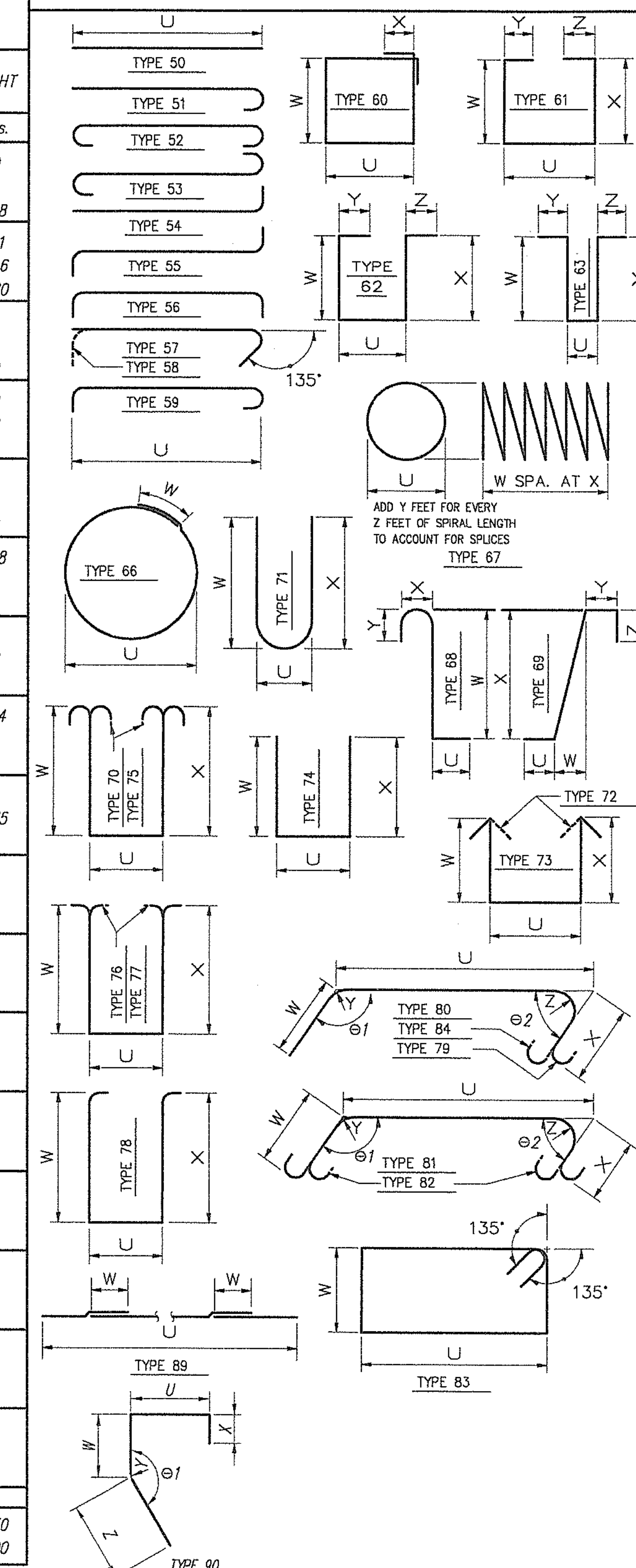

NOTE:

1. ALL REINFORCING BARS ON THIS SHEET SHALL BE AASHTO M-31 UNLESS SHOWN OTHERWISE.
2. REINFORCING FOR TRAFFIC BARRIERS AND GIRDERS NOT SHOWN IN THIS BAR LIST. SEE TRAFFIC BARRIER SHEET AND GIRDER SHEET.
3. BEND FOR TRANSVERSE BARS DUE TO ROADWAY CROWN CONDITIONS HAVE NOT BEEN SHOWN. THESE BARS SHALL BE BENT AS REQUIRED TO CONFORM TO THE CONFIGURATION OF THE STRUCTURE.
4. NUMBER AND LENGTH OF BARS TO BE DETERMINED BY THE CONTRACTOR FROM PLANS.

Fed. Aid No.
STPF-4253(010)

DESIGNED C. TOTTEN
DRAWN J. WILKES
CRP 392922
HOR. N/A
VERT. N/A
DATE FEB. 20, 2004
DWG: S76
SHEET 78 OF 78

CALL 48 HOURS BEFORE YOU DIG
1-800-553-4344
"It's the Law"
CLARK COUNTY UTILITIES COORDINATING COUNCIL

DESIGN & ENGINEERING DIVISION
NE 20TH AVE/HGWY 99 REALIG.
CLARK COUNTY
BAR LIST VI

EXPIRES 2/9/2006

otak Incorporated
105 W. Evergreen Blvd., Suite 300
Vancouver, WA 98660-3123
Phone: (360) 737-9613
FAX: (360) 737-9651

kpff Consulting Engineers
111 SW 5th Avenue
Suite 2500
Portland, Oregon 97204
503-227-3251

proud past, promising future
CLARK COUNTY
WASHINGTON