CAPITAL IMPROVEMENTS PROGRAM
COUNTY ROAD PROJECT # 311522

NE 10TH AVENUE

FROM NE CARTY ROAD TO NE 259TH STREET

PLANS FOR THE CONSTRUCTION OF
ROADWAYS AND STORM DRAINAGE

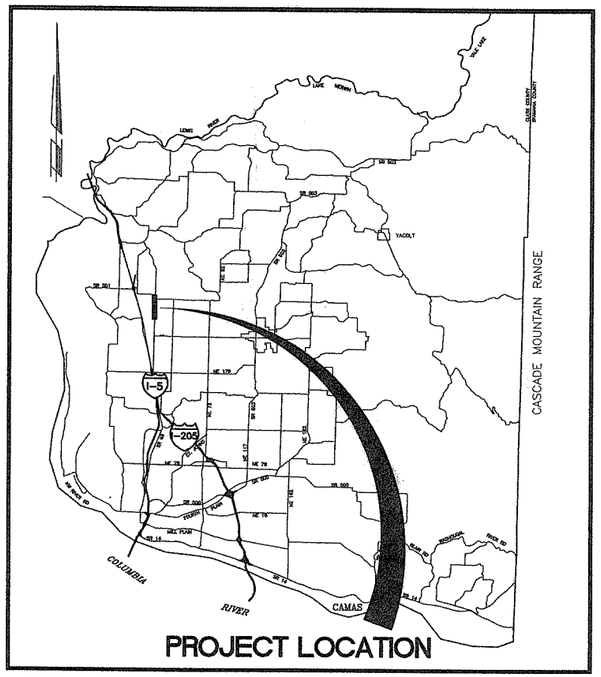

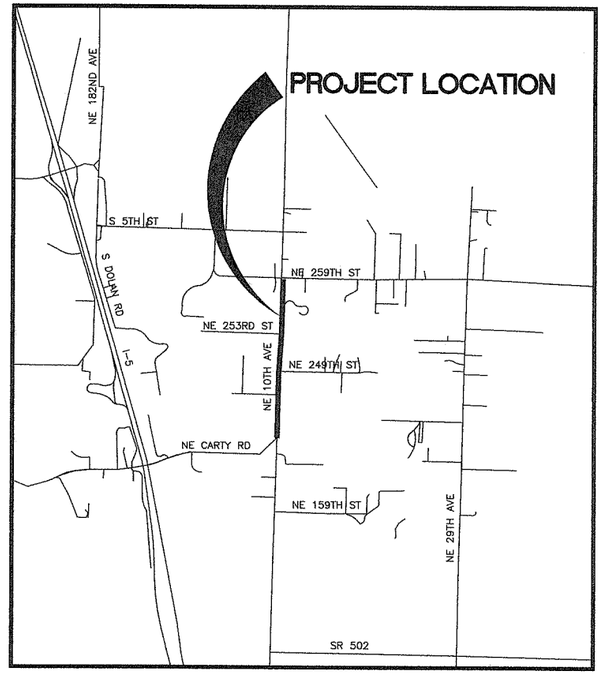

INDEX OF SHEETS

1 CV1 COVER SHEET
2 SQ1 SUMMARY OF QUANTITIES AND LEGEND
3 TS1 TYPICAL SECTIONS
4 HV1 HORIZONTAL AND VERTICAL CONTROL
5 EC1 EROSION CONTROL PLAN (STA BOP TO 99+00)
6 EC2 EROSION CONTROL PLAN (STA 99+00 TO 105+00)
7 EC3 EROSION CONTROL PLAN (STA 105+00 TO 115+00)
8 EC4 EROSION CONTROL PLAN (STA 115+00 TO 125+00)
9 EC5 EROSION CONTROL PLAN (STA 125+00 TO EOP)
10 EC6 EROSION CONTROL DETAILS
11 EC7 EROSION CONTROL DETAILS
12 SWF1 STORMWATER CONTROL FACILITY #1
13 SWF2 STORMWATER CONTROL FACILITY #1 DETAILS
14 SWF3 STORMWATER CONTROL FACILITY #2
15 SWF4 STORMWATER CONTROL FACILITY #2 DETAILS
16 RD1 ROADWAY DETAILS
17 DD1 DRAINAGE DETAILS
18 DD2 DRAINAGE DETAILS
19 W01 SEGMENTAL RETAINING WALL PROFILES
20 W02 SEGMENTAL RETAINING WALL PROFILES
21 W03 SEGMENTAL RETAINING WALL DETAILS
22 W04 SEGMENTAL RETAINING WALL SECTIONS
23 W05 CANTILEVERED PILE RETAINING WALL PROFILE
24 W06 CANTILEVERED PILE RETAINING WALL DETAILS
25 PP1 PLAN & PROFILE NE 10TH AVENUE (STA BOP TO 93+00)
26 PP2 PLAN & PROFILE NE 10TH AVENUE (STA 93+00 TO 98+00)
27 PP3 PLAN & PROFILE NE 10TH AVENUE (STA 98+00 TO 103+00)
28 PP4 PLAN & PROFILE NE 10TH AVENUE (STA 103+00 TO 108+00)
29 PP5 PLAN & PROFILE NE 10TH AVENUE (STA 108+00 TO 113+00)
30 PP6 PLAN & PROFILE NE 10TH AVENUE (STA 113+00 TO 118+00)
31 PP7 PLAN & PROFILE NE 10TH AVENUE (STA 118+00 TO 123+00)
32 PP8 PLAN & PROFILE NE 10TH AVENUE (STA 123+00 TO 128+00)
33 PP9 PLAN & PROFILE NE 10TH AVENUE (STA 128+00 TO EOP)
34 PP10 SIDE STREET PROFILES
35 DP1 DRAINAGE PLAN NE 10TH AVENUE (STA BOP TO 93+00)
36 DP2 DRAINAGE PLAN NE 10TH AVENUE (STA 93+00 TO 98+00)
37 DP3 DRAINAGE PLAN NE 10TH AVENUE (STA 98+00 TO 103+00)
38 DP4 DRAINAGE PLAN NE 10TH AVENUE (STA 103+00 TO 108+00)
39 DP5 DRAINAGE PLAN NE 10TH AVENUE (STA 108+00 TO 113+00)
40 DP6 DRAINAGE PLAN NE 10TH AVENUE (STA 113+00 TO 118+00)
41 DP7 DRAINAGE PLAN NE 10TH AVENUE (STA 118+00 TO 123+00)
42 DP8 DRAINAGE PLAN NE 10TH AVENUE (STA 123+00 TO 128+00)
43 DP9 DRAINAGE PLAN NE 10TH AVENUE (STA 128+00 TO EOP)
44 DP10 DRAINAGE PLAN NE 10TH AVENUE CULVERTS
45 I01 INTERSECTION PLAN
46 WP1 WATER PLAN
47 WP2 WATER PLAN
48 WP3 WATER DETAIL SHEET
49 SS1 SIGNING & STRIPING PLAN
50 SS2 SIGNING & STRIPING PLAN
51 DT1 DETOUR PLAN
52 LS01 WETLAND "F" MITIGATION PLANTING PLAN
53 LS02 RADKE PROPERTY MITIGATION PLANTING PLAN
54 LS03 MITIGATION PLANTING DETAILS/NOTES
55 LS04 MITIGATION PLANTING DETAILS/NOTES

THOMAS D. GRANGE — STATE OF WASHINGTON — 32068 — REGISTERED PROFESSIONAL ENGINEER — 3/11/04 — EXPIRES: JANUARY 20, 2006

JERRY F. BARNETT — STATE OF WASHINGTON — 36471 — REGISTERED PROFESSIONAL ENGINEER — 3/11/04 — EXPIRES: MARCH 17, 2005

COMMISSIONERS:

BETTY SUE MORRIS, Chair
JUDIE STANTON, Commissioner
CRAIG A. PRIDEMORE, Commissioner

proud past, promising future
CLARK COUNTY
WASHINGTON

DEPARTMENT OF
PUBLIC WORKS

DESIGN AND ENGINEERING DIVISION- DESIGN SECTION

Quality Assurance	Project Manager	Public Works Director/ County Engineer
Greg Shafer, P.E. DATE: 3/11/04	Linda Small DATE: 3/11/04	Peter Capell, P.E. DATE: 3/11/04

ENG 2002-00123

proud past, promising future
CLARK COUNTY
WASHINGTON

Recommended for Approval

Grading 3-11-04 Erosion 3-11-04

Storm Water Plan 3-11-04

Development Review Manager (3/11/2004) Date

SUMMARY OF QUANTITIES

ITEM NO.	QUANTITY	UNIT	BID ITEM DESCRIPTION
1	1	L.S.	MOBILIZATION
2	1	CALC	MINOR CHANGE
3	10	HOUR	REPLACEMENT STAKING SERVICES
4	1	L.S.	TEMPORARY CONSTRUCTION PERMIT/PROPERTY OWNER AGREEMENT WORK
5	20	DAY	INCENTIVE
6	3200	HOUR	TRAFFIC CONTROL LABOR
7	800	HOUR	TRAFFIC CONTROL SUPERVISOR
8	1	L.S.	TEMPORARY TRAFFIC CONTROL DEVICES
9	400	S.F.	CONSTRUCTION SIGNS CLASS A
10	1	L.S.	CLEARING AND GRUBBING
11	1	EST.	ROADSIDE CLEANUP
12	1	L.S.	REMOVAL OF STRUCTURE AND OBSTRUCTION
13	7,304	S.Y.	REMOVAL OF EXISTING CEMENT CONC. PAVEMENT
14	5,657	C.Y.	ROADWAY EXCAVATION (INCL HAUL)
15	6,121	C.Y.	STORMWATER FACILITY EXCAVATION (INCL. HAUL)
16	737	C.Y.	UNSUITABLE FOUNDATION EXCAVATION (INCL. HAUL)
17	901	C.Y.	TREATMENT LINER (FOR STORMWATER FACILITIES)
18	700	MGAL	WATER
19	15,340	S.Y.	CONSTRUCTION GEOTEXTILE FOR SEPARATION
20	10,938	TON	CRUSHED SURFACING BASE COURSE
21	728	TON	SHOULDER BALLAST (INCL. HAUL)
22	3,081	TON	ASPHALT CONCRETE PAVEMENT CL. A
23	4,309	TON	ASPHALT CONCRETE PAVEMENT CL. E
24	2,069	L.F.	SAWCUT EXISTING ASPHALT PAVEMENT
25	156	S.Y.	PLANING BITUMINOUS PAVEMENT
26	773	S.Y.	ASPHALT CONCRETE APPROACH CL. A (Extensions)
27	4,922	S.F.	CANTILEVERED PILE RETAINING WALL
28	1,391	L.F.	DRILLED PIERS
29	7,111	S.Y.	GEOGRID SOIL REINFORCEMENT FABRIC
30	10,247	S.F.	SEGMENTAL RETAINING WALL
31	477	L.F.	CULVERT PIPE 18 IN. DIAM.
32	302	L.F.	STORM SEWER PIPE, 10 IN. DIAM.
33	272	L.F.	STORM SEWER PIPE, 12 IN. DIAM.
34	1,656	L.F.	STORM SEWER PIPE, 18 IN. DIAM.
35	78	L.F.	DUCTILE IRON STORM SEWER PIPE, 18 IN. DIAM.
36	258	L.F.	STORM SEWER PIPE, 24 IN. DIAM.
37	46	L.F.	STORM SEWER PIPE, 30 IN. DIAM.
38	11	EACH	MANHOLE 48 IN. DIAM. TYPE 1
39	1	EACH	MANHOLE 60 IN. DIAM. TYPE 1
40	13	EACH	CATCH BASIN TYPE 1
41	2	EACH	MODIFIED CATCH BASIN TYPE 2, 72 IN. DIAM (Outlet Control Structure)
42	8	EACH	CONCRETE COMBINATION CURB INLET
43	5	EACH	CONCRETE DITCH INLET
44	21	EACH	LOW PROFILE DEBRIS TRAP
45	616	L.F.	DRIVEWAY DRAINAGE STRUCTURE
46	2,322	S.F.	TRENCH SAFETY SYSTEM
47	7	EACH	ADJUST WATER/GAS VALVE,RIM, COVER, OR FRAME
48	40	DAY	ESC LEAD
49	2,370	S.Y.	EROSION CONTROL BLANKET (Temporary)
50	2	EACH	STABILIZED CONSTRUCTION ENTRANCE
51	2	EACH	TIRE WASH
52	22	EACH	INLET PROTECTION
53	5,736	L.F.	SILT FENCE
54	1	EACH	EROSION CONTROL AND SPILL PREVENTION FEE
55	1	L.S.	SPCC PLAN
56	265	C.Y.	TOPSOIL TYPE A
57	2,050	C.Y.	TOPSOIL TYPE B
58	1	L.S.	ENVIRONMENTAL RESTORATION
59	27	EACH	PSIPE - CONIFER TREE, 4-6'
60	69	EACH	PSIPE - SMALL DECIDUOUS TREE, 5 GAL.
61	55	EACH	PSIPE - SMALL DECIDUOUS TREE, 10 GAL.
62	2,416	EACH	PSIPE - DECIDUOUS SHRUBS, 1 GAL.
63	74	EACH	PSIPE - DECIDUOUS SHRUBS, 2 GAL.
64	117	EACH	PSIPE - DECIDUOUS SHRUBS, 5 GAL.
65	75	EACH	PSIPE - WILLOW STAKES (Live)
66	345	C.Y.	COMPOST
67	380	C.Y.	BARK MULCH
68	1.50	ACRE	SEEDING AND MULCHING
69	0.20	ACRE	STORMWATER FACILITY SEEDING AND MULCHING
70	0.40	ACRE	STORMWATER FACILITY SEEDING
71	8,145	L.F.	CEMENT CONC. TRAFFIC CURB AND GUTTER (3" HIGH)
72	306	S.Y.	CEMENT CONCRETE APPROACH 3 DAY
73	1,731	L.F.	BEAM GUARDRAIL TYPE 1
74	11	EACH	BEAM GUARDRAIL NON-FLARED TERMINAL (SKT-350)
75	1	EACH	BEAM GUARDRAIL NON-FLARED TERMINAL (SKT-TL2)
76	632	L.F.	WIRE FENCE TYPE 2
77	1	EACH	SINGLE WIRE GATE 14 FT.
78	1	EACH	DOUBLE WIRE GATE 30 FT.
79	3,295	L.F.	COATED CHAIN LINK FENCE - TYPE 1 (BLACK)
80	3	EACH	DOUBLE 14-FT. COATED CHAIN LINK GATE (TYPE 1, BLACK)
81	52	L.F.	REMOVE AND RESET FENCE (INCL. GATE)
82	1,110	L.F.	TEMPORARY SAFETY FENCE
83	140	L.F.	PROTECTIVE CHAINLINK FENCING
84	1	EACH	ADJUST SURVEY MONUMENT CASE AND COVER
85	90	TON	LIGHT LOOSE RIPRAP
86	8	EACH	MAILBOX SUPPORT, TYPE 1
87	1	EACH	MAILBOX SUPPORT, TYPE 2

CPU WATERLINE ITEMS			
88	1	L.S.	MOBILIZATION
89	1	CALC	MINOR CHANGES
90	24	HOUR	TRAFFIC CONTROL LABOR (WATER)
91	8	HOUR	TRAFFIC CONTROL SUPERVISOR (WATER)
92	60	L.F.	TRENCH SAFETY SYSTEM (WATER)
93	530	L.F.	PVC PIPE FOR WATERMAIN, 12-INCH DIA. (W/ TYPE "R" RESTORATION)
94	1	EACH	HYDRANT ASSEMBLY (CONNECT AND FITTINGS (W/ RETURN), ASSEMBLY NO.1)
95	1	EACH	NEAR-SIDE WATER SERVICE, ASSEMBLY NO. 2N
96	2	EACH	CUT, CONNECT, AND FITTINGS, ASSEMBLY NO. 3
97	6	EACH	FITTINGS, ASSEMBLY NO. 4
98	2	EACH	BLOW-OFF ASSY (TEMP. STD. PERP. CONNECT AND FITTINGS). ASSEMBLY NO. 5
99	3	EACH	CUT, CONNECT, PIPE FITTINGS, ASSEMBLY NO. 6

LEGEND

- ROW LINE
- NEW EDGE OF PAVEMENT
- NEW CURB LINE
- NEW CENTER LINE
- NEW FENCE LINE
- NEW STORM DRAIN OR CULVERT
- NEW FILL LIMITS
- NEW CUT LIMITS
- SAWCUT LINE
- PERMANENT SLOPE EASEMENT
- NEW SILT FENCE
- EXISTING EDGE OF PAVEMENT
- EXISTING CURB LINE
- EXISTING CENTER LINE
- EXISTING FENCE LINE
- EXISTING TELEPHONE LINE
- EXISTING WATER LINE
- EXISTING UNDERGROUND ELECTRIC
- EXISTING SANITARY SEWER LINE
- EXISTING STORM DRAINAGE
- EXISTING GAS LINE
- EXISTING CULVERT
- EXISTING DITCH CENTER LINE
- EXISTING GUARDRAIL

SYMBOLS

- NEW CATCH BASIN (CB)
- NEW MANHOLE (MH)
- NEW CURB INLET (CI)
- NEW COMBINATION CURB INLET (CCI)
- NEW MAIL BOX
- NEW HANDICAP RAMP
- CURVE TABLE
- EXISTING TRANSFORMER
- EXISTING ELEC TOWER
- EXISTING SANITARY SEWER MH
- EXISTING FIRE HYDRANT
- EXISTING CLEAN OUT
- EXISTING GAS VALVE
- EXISTING WATER METER
- EXISTING WATER VALVE
- EXISTING SIGNAL POLE
- EXISTING TELEPHONE VAULT
- EXISTING TELEVISION BOX
- EXISTING WELL
- EXISTING BRUSH LINE
- EXISTING HEDGE
- EXISTING CURB INLET (CI)
- EXISTING CATCH BASIN (CB)
- EXISTING STORM MH
- EXISTING MISC MH
- EXISTING SHRUB
- EXISTING CONIFEROUS TREE
- EXISTING DECIDUOUS TREE
- EXISTING SIGN
- EXISTING DECIDUOUS TREE
- EXISTING J BOX
- EXISTING TELEPHONE MANHOLE
- EXISTING TELEPHONE POLE
- EXISTING LIGHT
- EXISTING GUY ANCHOR
- EXISTING POWER POLE
- EXISTING MAIL BOX
- EXISTING TELEPHONE PEDESTAL
- EXISTING SPRINKLER HEAD
- TRAVERSE POINT
- TEST HOLE

DESIGNED	TG
DRAWN	RK
CRP	311522
HOR.	NA
VERT.	NA
DATE	3/05/04
DWG:	SQ1
SHEET 2	OF 55

CALL 48 HOURS BEFORE YOU DIG
1-800-553-4344
"It's the Law"
NORTHWEST UTILITIES NOTIFICATION CENTER

STANLEY D. GRANGE STATE OF WASHINGTON 32088 REGISTERED PROFESSIONAL ENGINEER
3/17/04
EXPIRES: JANUARY 20, 2006

DESIGN & ENGINEERING DIVISION
DESIGN SECTION

NE 10TH AVENUE
SUMMARY OF QUANTITIES AND LEGEND

proud past, promising future
CLARK COUNTY WASHINGTON

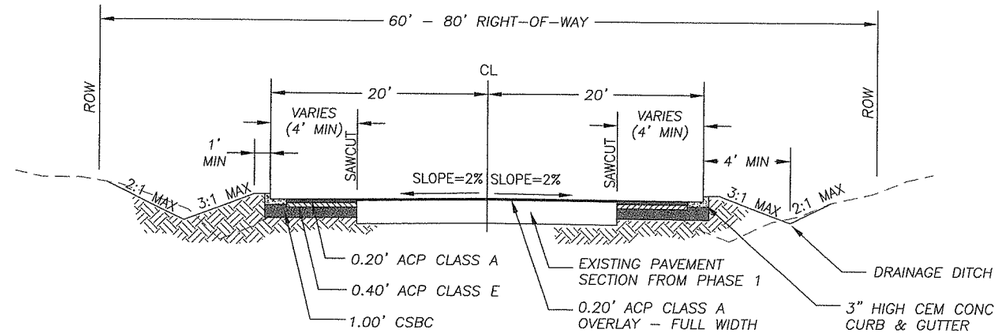

NE 10TH AVENUE
STA 88+50 TO 89+15
STA 91+50 TO 99+00

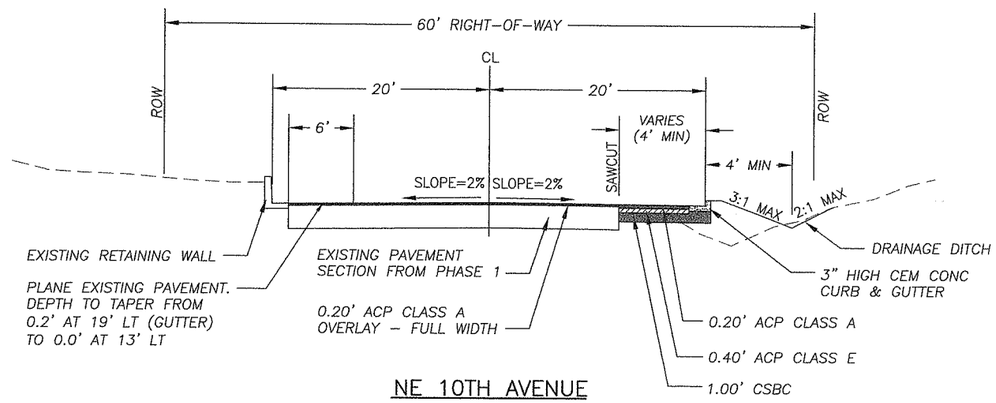

NE 10TH AVENUE
STA 89+15 TO 91+50

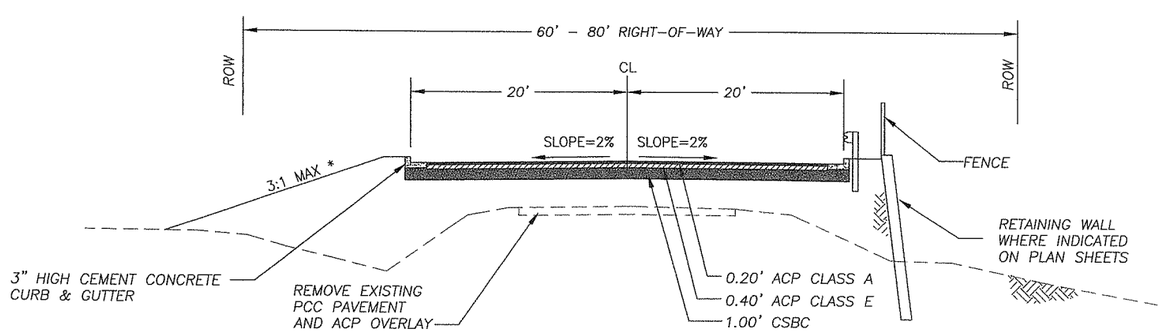

NE 10TH AVENUE
STA 99+00 TO 131+87

* STA 128+00 TO 131+87
2:1 MAX LEFT SIDE

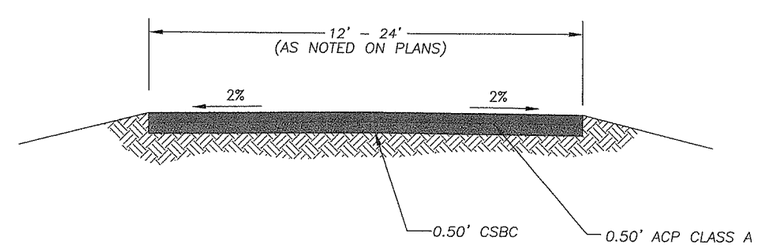

SIDE STREETS AND STORMWATER FACILITY ACCESS ROAD
TYPICAL SECTION
NTS

DESIGNED	TG
DRAWN	RK
CRP	311522
HOR.	NA
VERT.	NA
DATE	3/05/04
DWG:	TS1
SHEET 3	OF 55

CALL 48 HOURS BEFORE YOU DIG
1–800–553–4344
"It's the Law"
NORTHWEST UTILITIES NOTIFICATION CENTER

THOMAS D. GRAGG
STATE OF WASHINGTON
32084
PROFESSIONAL ENGINEER
EXPIRES: JANUARY 20, 2006

DESIGN & ENGINEERING DIVISION
DESIGN SECTION

NE 10TH AVENUE
TYPICAL SECTIONS

proud past, promising future
CLARK COUNTY
WASHINGTON

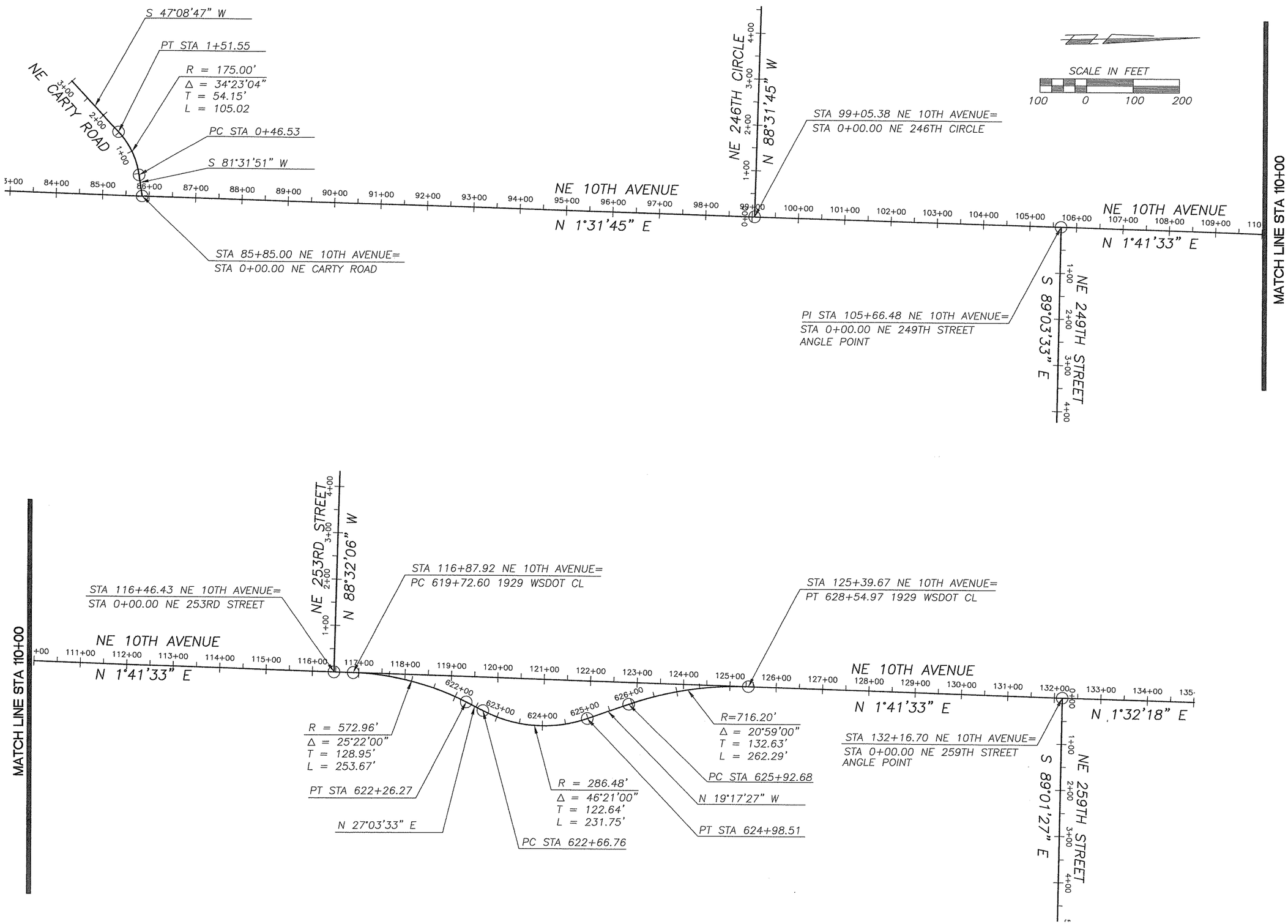

DESIGNED TG
DRAWN RK
CRP 311522
HOR. 1"=100'
VERT. NA
DATE 3/05/04
DWG: HV1
SHEET 4 OF 55

CALL 48 HOURS BEFORE YOU DIG
1-800-553-4344
"It's the Law"
NORTHWEST UTILITIES NOTIFICATION CENTER

LARRY D. GRANGE
STATE OF WASHINGTON
PROFESSIONAL ENGINEER
EXPIRES: JANUARY 20, 2006
3-1-04

DESIGN & ENGINEERING DIVISION
DESIGN SECTION

NE 10TH AVENUE
HORIZONTAL AND VERTICAL CONTROL

proud past, promising future
CLARK COUNTY
WASHINGTON

SCALE IN FEET

20 0 20 40

NOTE:
SIGNIFICANT VARIATION AND DEGREE OF EROSION CONTROL EFFORT WILL BE DICTATED BY WEATHER CONDITIONS. THE DEVELOPER AND CONTRACTOR SHOULD BE PREPARED TO PROVIDE EXTRA EROSION CONTROL PROVISIONS AND EFFORT DURING WINTER AND WET WEATHER CONDITIONS BEYOND THAT NORMALLY REQUIRED DURING SUMMER AND DRY WEATHER CONDITIONS. FINE GRAINED AND UNCONSOLIDATED SOILS ON SLOPING SITES MAY BECOME UNSTABLE WHEN SUBJECT TO EXCESSIVE MOISTURE.

LEGEND

—SF—SF—	SILT FENCE
IP	INLET PROTECTION
— · —	WETLAND BOUNDARY

DESIGNED	TG
DRAWN	RK
CRP	311522
HOR.	20
VERT.	NA
DATE	3/05/04
DWG.	EC1
SHEET 5	OF 55

CALL 48 HOURS BEFORE YOU DIG
1-800-553-4344
"It's the Law"
NORTHWEST NOTIFICATION CENTER

STEVEN D. CRAMER
STATE OF WASHINGTON
REGISTERED
PROFESSIONAL ENGINEER
EXPIRES JANUARY 20, 2006

DESIGN & ENGINEERING DIVISION
DESIGN SECTION

NE 10TH AVENUE
EROSION CONTROL PLAN (BOP TO STA 99+00)

proud past, promising future
CLARK COUNTY
WASHINGTON

SCALE IN FEET

30 0 30 60

LEGEND

— SF — SF — SILT FENCE

(IP) INLET PROTECTION

— · — WETLAND BOUNDARY

NOTE:
SIGNIFICANT VARIATION AND DEGREE OF EROSION CONTROL EFFORT WILL BE DICTATED BY WEATHER CONDITIONS. THE DEVELOPER AND CONTRACTOR SHOULD BE PREPARED TO PROVIDE EXTRA EROSION CONTROL PROVISIONS AND EFFORT DURING WINTER AND WET WEATHER CONDITIONS BEYOND THAT NORMALLY REQUIRED DURING SUMMER AND DRY WEATHER CONDITIONS. FINE GRAINED AND UNCONSOLIDATED SOILS ON SLOPING SITES MAY BECOME UNSTABLE WHEN SUBJECT TO EXCESSIVE MOISTURE.

DESIGNED	TG
DRAWN	RK
CRP	311522
HOR.	20
VERT.	NA
DATE	3/05/04
DWG:	EC2
SHEET 6	OF 55

CALL 48 HOURS BEFORE YOU DIG
1-800-553-4344
"It's the Law"
NORTHWEST UTILITIES NOTIFICATION CENTER

THOMAS D. GRANGE
STATE OF WASHINGTON
32268
REGISTERED PROFESSIONAL ENGINEER
EXPIRES: JANUARY 20, 2006

DESIGN & ENGINEERING DIVISION
DESIGN SECTION

NE 10TH AVENUE
EROSION CONTROL PLAN (STA 99+00 TO 105+00)

proud past, promising future
CLARK COUNTY
WASHINGTON

NOTE:
SIGNIFICANT VARIATION AND DEGREE OF EROSION CONTROL EFFORT WILL BE DICTATED BY WEATHER CONDITIONS. THE DEVELOPER AND CONTRACTOR SHOULD BE PREPARED TO PROVIDE EXTRA EROSION CONTROL PROVISIONS AND EFFORT DURING WINTER AND WET WEATHER CONDITIONS BEYOND THAT NORMALLY REQUIRED DURING SUMMER AND DRY WEATHER CONDITIONS. FINE GRAINED AND UNCONSOLIDATED SOILS ON SLOPING SITES MAY BECOME UNSTABLE WHEN SUBJECT TO EXCESSIVE MOISTURE.

LEGEND

— SF — SF — SILT FENCE

(IP) INLET PROTECTION

— · — WETLAND BOUNDARY

SCALE IN FEET

20 0 20 40

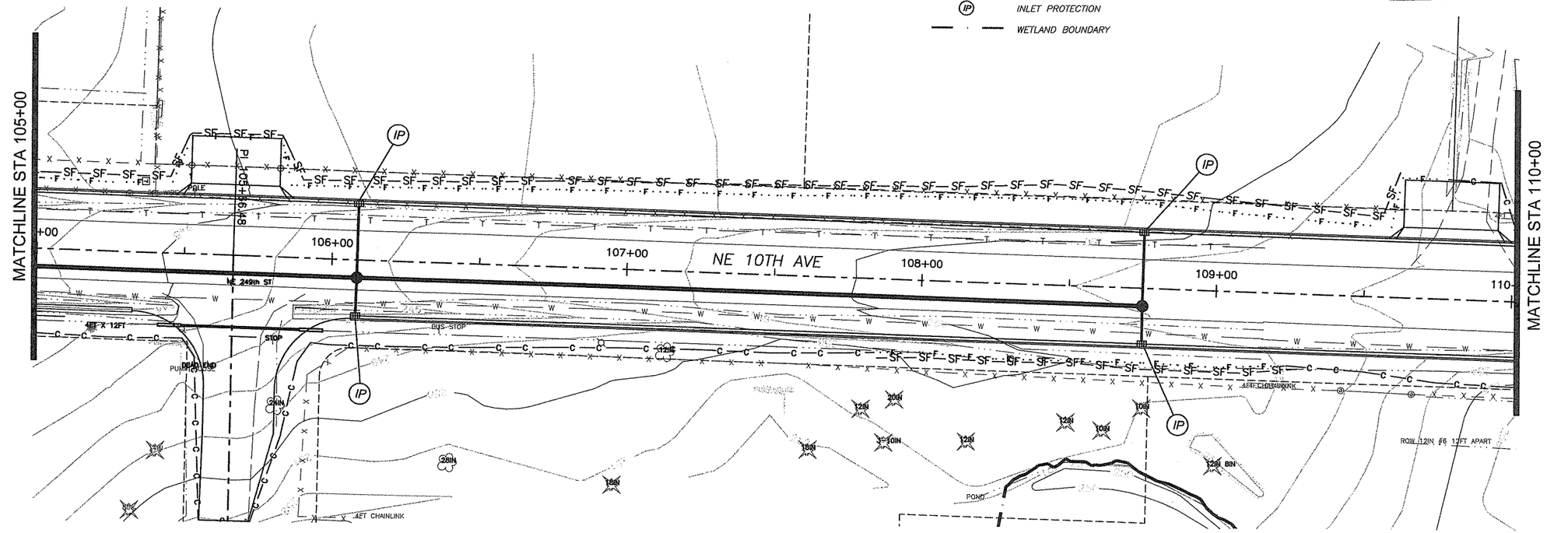

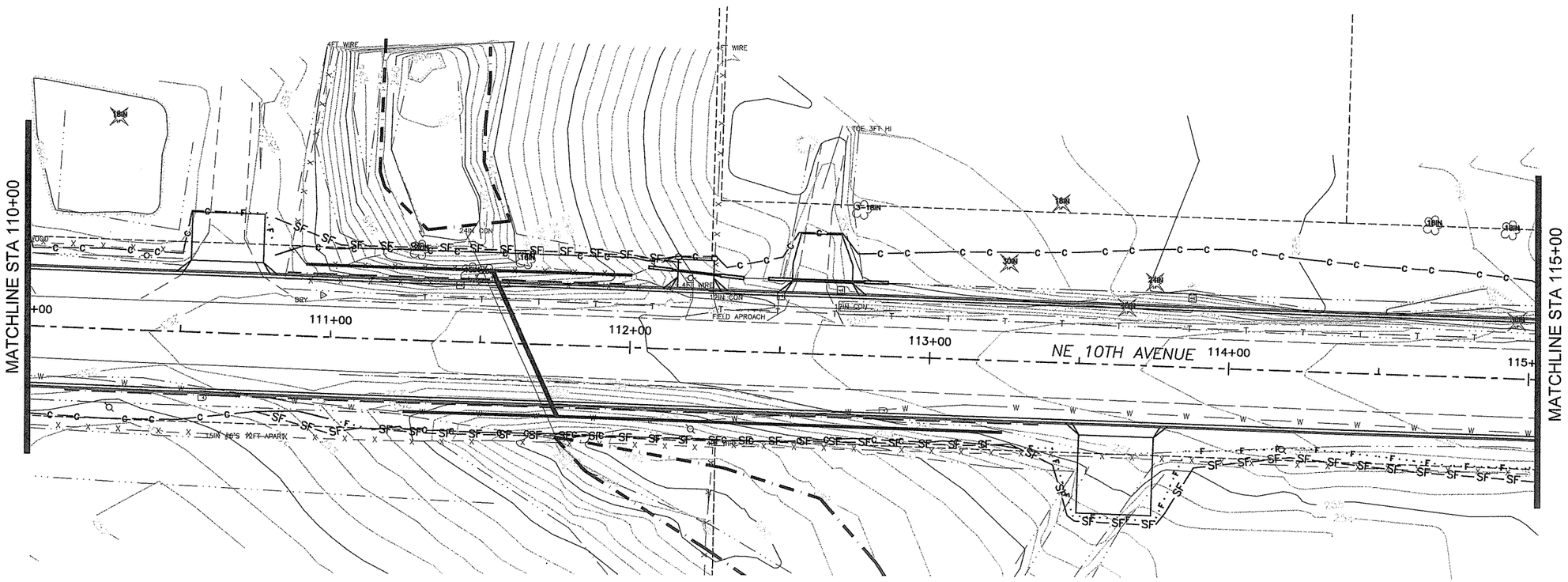

DESIGNED	TG
DRAWN	RK
CRP	311522
HOR.	20
VERT.	NA
DATE	3/05/04
DWG:	EC3
SHEET 7	OF 55

CALL 48 HOURS BEFORE YOU DIG
1-800-553-4344
"It's the Law"
NORTHWEST UTILITIES NOTIFICATION CENTER

STEVEN D. CRAMER
STATE OF WASHINGTON
PROFESSIONAL ENGINEER
EXPIRES JANUARY 6th, 2006

DESIGN & ENGINEERING DIVISION
DESIGN SECTION

NE 10TH AVENUE
EROSION CONTROL PLAN (STA 105+00 TO 115+00)

proud past, promising future

CLARK COUNTY
WASHINGTON

NOTE:
SIGNIFICANT VARIATION AND DEGREE OF EROSION CONTROL EFFORT WILL BE DICTATED BY WEATHER CONDITIONS. THE DEVELOPER AND CONTRACTOR SHOULD BE PREPARED TO PROVIDE EXTRA EROSION CONTROL PROVISIONS AND EFFORT DURING WINTER AND WET WEATHER CONDITIONS BEYOND THAT NORMALLY REQUIRED DURING SUMMER AND DRY WEATHER CONDITIONS. FINE GRAINED AND UNCONSOLIDATED SOILS ON SLOPING SITES MAY BECOME UNSTABLE WHEN SUBJECT TO EXCESSIVE MOISTURE.

DESIGNED	TG
DRAWN	RK
CRP	311522
HOR.	20
VERT.	NA
DATE	3/05/04
DWG:	EC4
SHEET 8	OF 55

CALL 48 HOURS BEFORE YOU DIG
1-800-553-4344
"It's the Law"
NORTHWEST UTILITIES NOTIFICATION CENTER

LOUIS D. GRANGE
STATE OF WASHINGTON
22248
REGISTERED PROFESSIONAL ENGINEER
EXPIRES JANUARY 20, 2005

DESIGN & ENGINEERING DIVISION
DESIGN SECTION

NE 10TH AVENUE
EROSION CONTROL PLAN (STA 115+00 TO 125+00)

proud past, promising future
CLARK COUNTY
WASHINGTON

NOTE:
SIGNIFICANT VARIATION AND DEGREE OF EROSION CONTROL EFFORT WILL BE DICTATED BY WEATHER CONDITIONS. THE DEVELOPER AND CONTRACTOR SHOULD BE PREPARED TO PROVIDE EXTRA EROSION CONTROL PROVISIONS AND EFFORT DURING WINTER AND WET WEATHER CONDITIONS BEYOND THAT NORMALLY REQUIRED DURING SUMMER AND DRY WEATHER CONDITIONS. FINE GRAINED AND UNCONSOLIDATED SOILS ON SLOPING SITES MAY BECOME UNSTABLE WHEN SUBJECT TO EXCESSIVE MOISTURE.

LEGEND

— SF — SF — SILT FENCE

(IP) INLET PROTECTION

— · — WETLAND BOUNDARY

DESIGNED	TG
DRAWN	RK
CRP	311522
HOR.	20
VERT.	NA
DATE	3/05/04
DWG.	EC5
SHEET 9	OF 55

CALL 48 HOURS BEFORE YOU DIG
1-800-553-4344
"It's the Law"
NORTHWEST UTILITIES NOTIFICATION CENTER

THOMAS D. GRANGER
STATE OF WASHINGTON
RENEWAL DATE
PROFESSIONAL ENGINEER
EXPIRES JANUARY 30, 2005

DESIGN & ENGINEERING DIVISION
DESIGN SECTION

NE 10TH AVENUE
EROSION CONTROL PLAN (STA 125+00 TO EOP)

proud past, promising future
CLARK COUNTY
WASHINGTON

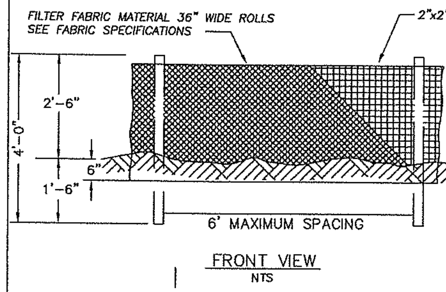

SEDIMENT FENCE FABRIC SPECIFICATIONS
(Woven Polyproylene sediment fence fabric)

PROPERTY	TEST PROCEDURE	MIN. FABRIC VALUE
Grab Tensile Strength	ASTM D-4632	180 lbs.
Grab elongation	ASTM D-4632	15%
trapezoid Tear	ASTM D-4533	70 lbs.
Mullen Burst	ASTM D-3786	300 psi.
Puncture	ASTM D-4833	80 lbs.
Permitivity	ASTM D-4491	0.07 sec-1
Permeability	ASTM D-4491	.005 cm/sec
A.O.S.	ASTM D-4751	50 U.S. Sieve
UV Resistance(500 hrs)	ASTM D-4355	90%

FRONT VIEW
NTS

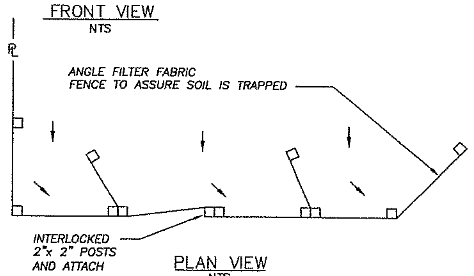

PLAN VIEW
NTS

NOTES
1. THIS SEDIMENT BARRIER UTILIZES STANDARD STRENGTH OR EXTRA STRENGTH SYNTHETIC FILTER FABRICS, IT IS DESIGNED FOR SITUATIONS IN WHICH ONLY SHEET OR OVERLAND FLOWS ARE EXPECTED. (SEE FABRIC SPECIFICATIONS ABOVE)
2. BURY BOTTOM OF FILTER FABRIC 6" VERTICALLY BELOW FINISHED GRADE.
3. POST ARE TO BE 2"x2" FIR, PINE OR STEEL FENCE POSTS.
4. POST TO BE INSTALLED ON UPHILL SIDE OF SLOPE.
5. COMPACT BOTH SIDES OF FILTER FABRIC TRENCH.
6. SEDIMENT FENCE TO BE SPACED ON SLOPES PER TABLE BELOW.

INSTALL PARALLEL ALONG CONTOURS AS FOLLOWS		
% SLOPE	SLOPE	MAX. SPACING ON SLOPE
10% FLATTER	10:1 OR FLATTER	300 ft.
10>%<15	10:1>x<7.5:1	150 ft.
15>%<20	7.5:1>x<5:1	100 ft.
20>%<30	5:1>x<3.5:1	50 ft.
30>%<50	3.5:1>x<2:1	25 ft.

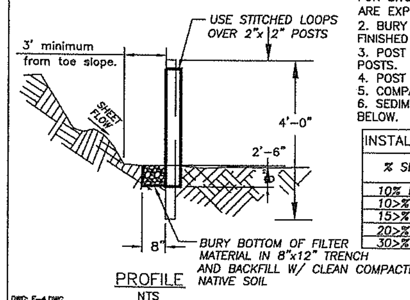

PROFILE
NTS

NO.	REVISIONS	DATE	BY

DWG: E-4.DWG

Department of Public Works
CLARK COUNTY
WASHINGTON
proud past, promising future

STANDARD SEDIMENT FENCE

APPROVED 01/01/04
COUNTY ENGINEER DATE

STANDARD E-4 PLAN No.

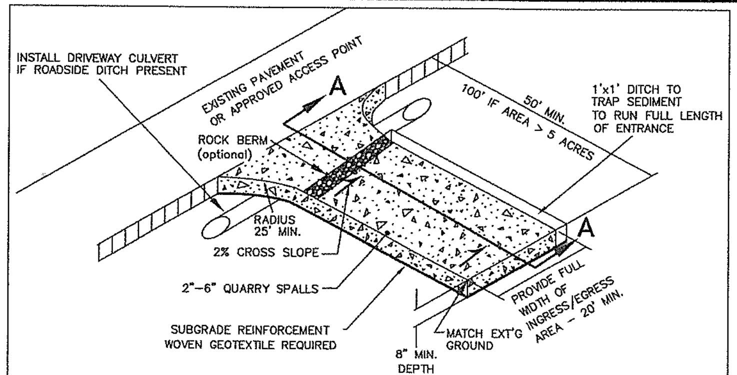

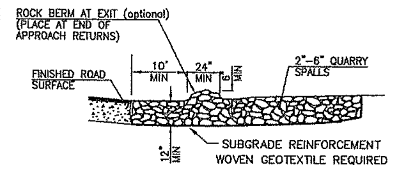

1. EXCAVATE MINIMUM OF 12" OF EXISTING SOILS.
2. PLACE MINIMUM OF 12" OF 2"-6" QUARRY SPALLS
3. CONSTRUCT ROCK BERM ALONG TRANSITION POINT TO FINISH ROAD SURFACES, DIVERT RUNOFF TO ONSITE AREA (OPTIONAL).

SECTION A-A

NOTES:

1. FOR DEVELOPMENT PROJECTS REVIEWED BY ENGINEERING SERVICES. NOT FOR USE WITH SINGLE FAMILY OR DUPLEX RESIDENTIAL BUILDING PERMITS. SEE BUILDING DEPT. FOR GRAVEL CONSTRUCTION ENTRANCE PLAN.
2. INSTALL WOVEN GEOTEXTILE FABRIC TO PREVENT SUB-SOIL PUMPING.
3. VEHICLE WASHDOWN AREA, IF REQUIRED, IS TO BE INSTALLED AND USED TO REMOVE SEDIMENT FROM VEHICLES THAT ARE ABOUT TO ENTER AN ESTABLISHED ROAD.
4. WASHDOWN AREA TO BE MADE UP OF CLEAN 2"- 6" QUARRY SPALLS, 1" DEEP (MIN) OVER WOVEN GEOTEXTILE FABRIC. WASHDOWN AREA TO BE FULL WIDTH OF ENTRANCE AND 50' (MIN.), AND 100' IF EXPOSED SOIL IS OVER 5 ACRES.
5. AT TIME OF PRECONSTRUCTION MEETING, THE COUNTY INSPECTOR MAY REQUIRE THE ENTRANCE TO BE PAVED TO THE EDGE OF THE RIGHT-OF-WAY PRIOR TO THE INSTALLATION OF A WASHDOWN ENTRANCE TO AVOID DAMAGE TO THE EXISTING ROADWAY.
6. THE RESPONSIBLE EROSION CONTROL INDIVIDUAL IS TO ENSURE THAT ALL VEHICLES USE THIS ENTRANCE AND ARE TO BE INSPECTED AND CLEANED OF SOILS BEFORE LEAVING PROJECT, AND THAT THE ENTRANCE IS TO BE KEPT CLEAN AT ALL TIMES.

NO.	REVISIONS	DATE	BY

DWG: E-1.DWG

Department of Public Works
CLARK COUNTY
WASHINGTON
proud past, promising future

STANDARD CONSTRUCTION ENTRANCE

APPROVED 01/01/04
COUNTY ENGINEER DATE

STANDARD E-1 PLAN No.

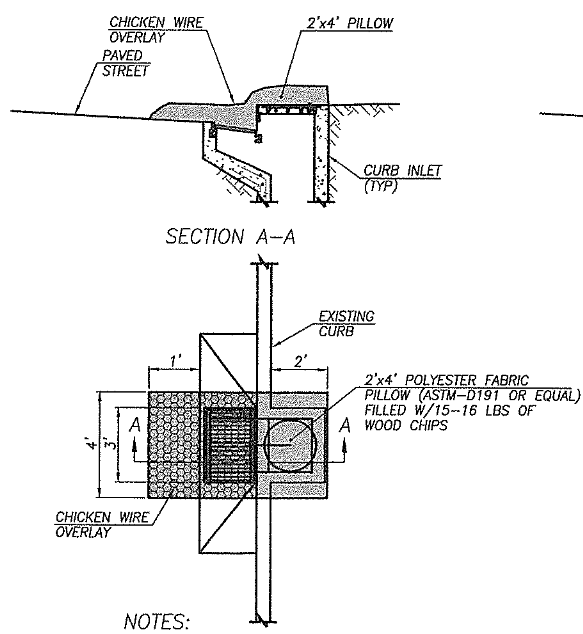

NOTES:
1. STRAWBALES MAY BE SUBSTITUTED, BUT ONLY BEFORE STREETS ARE PAVED. ONCE STREETS ARE PAVED THIS METHOD OR EQUIVALENT MUST BE USED

COMBINATION CURB INLET
SILT BARRIER
NTS

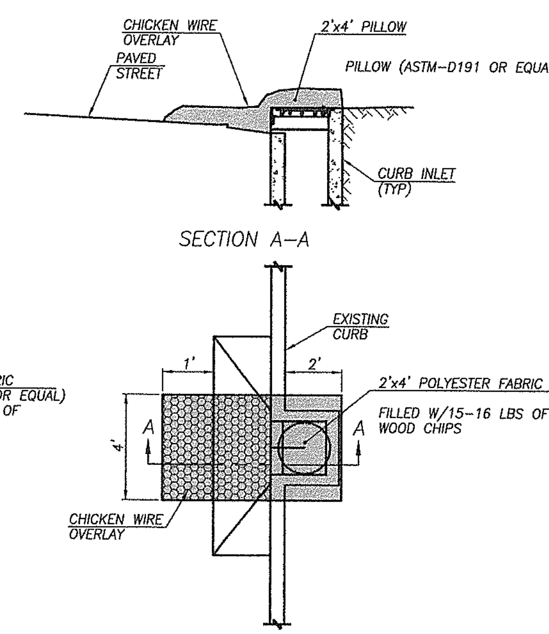

CURB INLET
SILT BARRIER
NTS

INLET PROTECTION
NTS

STANDARD NOTES FOR EROSION CONTROL PLAN

1. The Contractor shall install and maintain BMP's as shown and perform all actions necessary to prevent erosion, and control sediment from leaving the construction site. Site Contractor shall comply with Clark County Code Chapter 40.380.050.

2. All erosion control measures shall be in-place and in working condition prior to disturbing and exposing any soil surfaces (i.e. silt fence, construction entrance, sedimentation barriers, sedimentation traps).

3. All erosion prevention and control BMP's shall be maintained and repaired as needed to insure continued performance of their intended function. Needed repairs shall be made as soon as practicable. They are to remain in place and operational during all phases of construction. Construction activities shall not continue or resume until repairs to erosion control facilities are made and the facilities are functional. Any sediment leaving the site or discharging to a sensitive area shall be stopped and controlled immediately. Contaminated areas shall be cleaned and restored.

4. Clearing limits and work area limits shall be delineated and marked. Do not disturb more area than needed for construction requirements.

5. All sensitive or critical areas (wetlands, steep slopes, natural waterways), and buffers shall all be clearly delineated and clearly marked, and protected from sediment deposition.

6. Sediment laden runoff shall be prevented from entering all existing storm water catch basins and inlets affected by construction.

7. No exposed, bare soils shall remain unstabilized for more than two days during the period October 1 thru April 30 or for more than seven days during the period of May 1 through September 30. All disturbed soil surfaces shall be stabilized by a suitable application of "Best Management Practices".

8. Where feasible, no more than 500 feet of trench shall be open at one time. Excavated material shall be placed on the up-hill side of trenches provided it does not conflict with safety requirements.

9. Dewatering devices shall discharge into a sediment trap or sediment pond. No discharge shall be made to a paved street or stormwater collection system without first removing sediment.

10. Cut and fill slopes shall be constructed in a manner that will minimize erosion. Erosion shall be controlled and prevented by such measures as roughening the surface, installation of interceptor ditches, terracing, covering with matting, mulch or plastic sheeting. Runoff shall be prevented from entering a slope and from undercutting the base of slopes.

11. Any soil or debris transported onto roadways and sidewalks shall be removed. Deposits shall be completely removed by shoveling and/or sweeping. Washing shall not be utilized unless specifically approved in writing by the County.

12. All permanent infiltration systems shall be isolated and protected from sediment laden runoff entering to avoid risk of reducing the ability of the systems to infiltrate. Isolation and protection shall not be removed until the drainage area tributary to the system is completely stabilized.

CONTINUED ON SHEET 2

NO.	REVISIONS	DATE	BY

DWG: ECN1.DWG

Department of Public Works
CLARK COUNTY
WASHINGTON
proud past, promising future

STANDARD NOTES FOR EROSION CONTROL PLAN

APPROVED 01/01/04
COUNTY ENGINEER DATE

STANDARD ECN1 PLAN No.

STANDARD NOTES FOR EROSION CONTROL PLAN (CONTINUED)

13. All conveyance channels, both temporary and permanent shall be stabilized to prevent erosion of the channel. Stabilization shall extend to areas at outlets and downstream reaches vulnerable to erosion resulting from flow discharging from the channel.

14. If BMP's shown are utilized but are insufficient to prevent sediment from reaching water bodies, adjacent properties, or public rights-of-way; additional BMP's shall be implemented immediately to prevent further encroachment of sediment.

15. Stabilized areas shall be provided for employee parking and storage of construction materials. Erodeable stockpiles of earthen materials, such as topsoil, silty and clayey soils; and landscape materials, shall be covered when not being incorporated in the work. Erosion control BMP's shall be utilized as necessary to prevent sediment laden runoff from leaving or sediment being transported from these areas from vehicle activity.

16. All pollutants other than sediment that occur during construction shall be handled and disposed of in a manner that does not cause contamination of storm water.

17. The Contractor shall keep an inspection log of the condition of the erosion control facilities. Erosion control facilities shall be inspected at least weekly and after each rainfall. The inspection log shall be kept at the project site at a designated location and shall be available for review by the County. An individual that has successfully completed the County's Erosion Control Certification course shall perform inspections and maintain the log.

18. All temporary BMP's shall be removed within 30 days after final site stabilization is achieved. Trapped sediment shall be deposited and stabilized on site. Areas disturbed resulting from removal shall be permanently stabilized.

19. Construction shall not be considered complete and acceptable until all disturbed soil surfaces have been protected from erosion with permanent landscaping, covering with impervious surfaces, restored to original undisturbed condition or permanently stabilized.

20. Vegetated stabilization and landscaping shall be fertilized, watered and maintained to insure that growth of vegetation is established and sustained.

21. During dry weather construction periods the contractor shall provide project-specific dust control measures that may include: Seeding, Mulching, Matting, Water, Tackifier, or Chemical Soil Stabilizers. The contractor shall maintain the dust control measures through dry weather periods until all disturbed areas have been stabilized. Immediately re-stabilize areas disturbed by contractor's operations or other activities (wind, water, vandalism, etc.).

22. Entry onto the construction site shall be restricted to a single approved entrance as shown on the plan.

23. Maintenance and repair of heavy equipment and vehicles which involve potential contaminants (oil,solvents,hydraulic fluid, etc.) must be conducted in a manner which prevents contamination of soils, surface water and ground water. Tarps, drip pans, or other appropriate measures shall be used as necessary.

24. Stripping, topsoil, and unsuitable material stockpiles shall be hydroseeded with "regreen wheat x wheat grass hybrid" by Hobbs and Hobkins (or approved equal). Maintenance of stockpile areas and reapplication of hydroseed covering shall be required if bare soil is present. During winter and wet weather conditions, stockpiles shall be covered with plastic sheeting per detail E-16.

SHEET 2 OF 2

NO.	REVISIONS	DATE	BY

DWG: ECN2.DWG

Department of Public Works
CLARK COUNTY
WASHINGTON
proud past, promising future

STANDARD NOTES (CONTINUED) FOR EROSION CONTOL PLAN

APPROVED 01/01/04
COUNTY ENGINEER DATE

STANDARD ECN2 PLAN No.

CALL 48 HOURS BEFORE YOU DIG
1-800-553-4344
"It's the Law"
NORTHWEST UTILITIES NOTIFICATION CENTER

EXPIRES JANUARY 20, 2006

DESIGN & ENGINEERING DIVISION
DESIGN SECTION

NE 10TH AVENUE
EROSION CONTROL DETAILS

CLARK COUNTY
WASHINGTON
proud past, promising future

DESIGNED	TG
DRAWN	RK
CRP	311522
HOR.	NA
VERT.	NA
DATE	3/05/04
DWG:	EC6
SHEET	10 OF 55

WATTLE DETAIL

NTS

WATTLES STAKED ALONG THE CONTOUR OF NEWLY CONSTRUCTED OR DISTURBED SLOPES. CAN OFTEN BE USED TO REPLACE SEDIMENT FENCES ON STEEP SLOPES.

Construction Specifications:

Prepare the slope before the wattling procedure is started.

Shallow gullies should be smoothed as work progresses.

Dig small trenches across the slope on contour, to place rolls in. The trench should be deep enough to accommodate half the thickness of the roll. When the soil is loose and uncompacted, the trench should be deep enough to bury the roll 2/3 of its thickness because the ground will settle.

It is critical that rolls are installed perpendicular to water movement, parallel to the slope contour.

Start building trenches and install rolls from the bottom of the slope and work up.

Construct trenches at contour intervals of 3–12 feet apart depending on steepness of slope. The steeper the slope, the closer together the trenches.

Lay the roll along the trenches fitting it snugly against the soil. Make sure no gaps exist between the soil and the straw wattle.

Use a straight bar to drive holes through the wattle and into the soil for the willow or wooden stakes.

Drive the stake through prepared hole into soil. Leave only 1 or 2 inches of stake exposed above roll.

If using willow stakes refer to Live Staking BMP.

Install stakes at least every 4 feet apart through the wattle. Additional stakes may be driven on the downslope side of the trenches on highly erosive or very steep slopes.

Inspection and Maintenance:

Inspect the straw rolls and the slopes after significant storms. Make sure the rolls are in contact with the soil.

Repair any rills or gullys promptly.

Reseed or replant vegetation if necessary until the slope is stabilized.

Department of Public Works
CLARK COUNTY WASHINGTON
proud past, promising future

WATTLE SEDIMENT BARRIER

APPROVED

COUNTY ENGINEER

DATE 9/01/04

STANDARD E-6

PLAN No.
DRAWN BY
DATE 06/06/02

DWG E-6.DWG

NO.	REVISIONS	DATE	BY

WHEEL WASH PLAN
NTS

ELEVATION VIEW
NTS

SECTION A–A
NTS

NOTES

1. ASPHALT CONSTRUCTION ENTRANCE, 6" OF ATB.
2. 3" TRASH PUMP WITH FLOATS ON SUCTION HOSE.
3. MIDPOINT SPRAY NOZZLES, IF NEEDED.
4. 6" SEWER PIPE WITH BUTTERFLY VALVES. BOTTOM PIPE IS A DRAIN. LOCATE TOP PIPE'S INVERT 1' ABOVE BOTTOM OF WHEEL WASH.
5. 8'x 8' SUMP WITH 5' OF CATCHMENT. BUILD WITH ABILITY TO CLEAN WITH BACKHOE.
6. ASPHALT CURB ON THE LOW ROAD SIDE TO DIRECT WATER BACK TO POND.
7. 6" SLEEVE UNDER ROAD.
8. BALL VALVES.
9. ATB APRON TO PROTECT FROM SPLASHING WATER.
10. CONTRACTOR TO REMOVE ACCUMULATED SEDIMENT FROM WHEEL WASH; MAY BE PIPED TO AN APPROVED SEDIMENT TRAP.
11. USE GEOTEXTILE FABRIC WITH AGGREGATE FOR A TEMPORARY WHEEL WASH.

Department of Public Works
CLARK COUNTY WASHINGTON
proud past, promising future

WHEEL WASH

APPROVED

COUNTY ENGINEER

DATE 9/01/04

STANDARD E-15

PLAN No.
DRAWN BY
DATE 06/06/02

DWG E-15

NO.	REVISIONS	DATE	BY

DESIGNED	TG
DRAWN	RK
CRP	311522
HOR.	NA
VERT.	NA
DATE	3/05/04
DWG:	EC7
SHEET 11	OF 55

CALL 48 HOURS BEFORE YOU DIG
1-800-553-4344
"It's the Law"
NORTHWEST UTILITIES NOTIFICATION CENTER

THOMAS D. GRANGE
STATE OF WASHINGTON
32584
REGISTERED PROFESSIONAL ENGINEER
EXPIRES: JANUARY 20, 2006

DESIGN & ENGINEERING DIVISION
DESIGN SECTION

NE 10TH AVENUE
EROSION CONTROL DETAILS

proud past, promising future
CLARK COUNTY
WASHINGTON

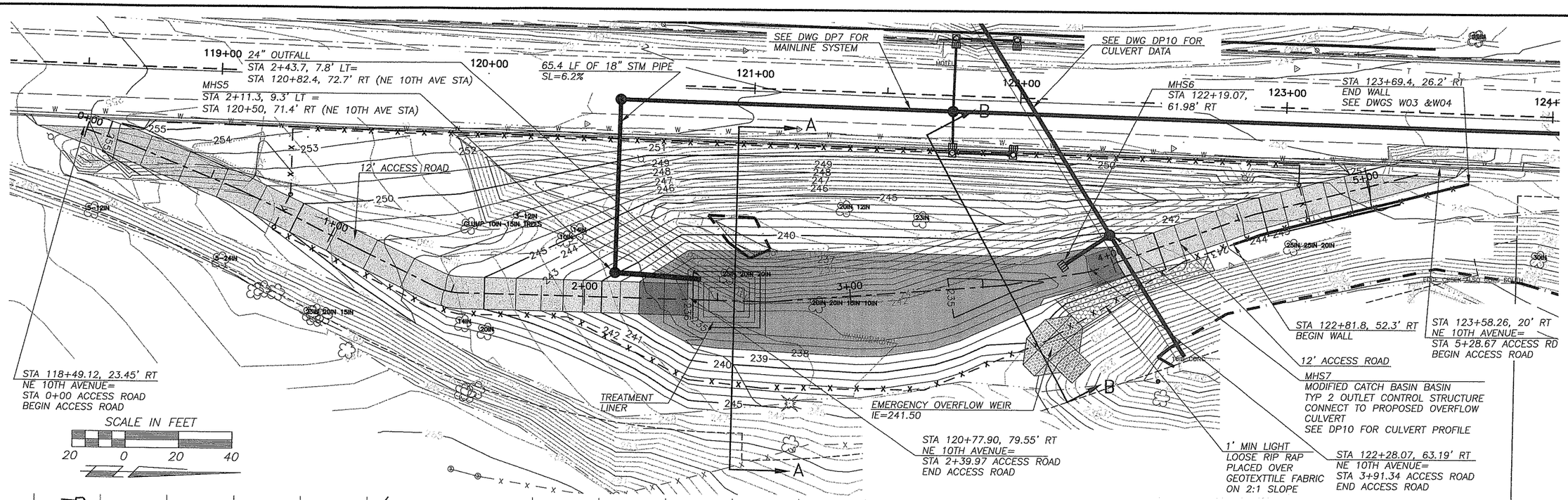

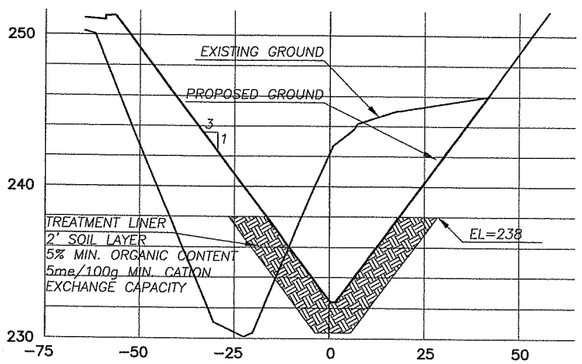

SECTION A-A

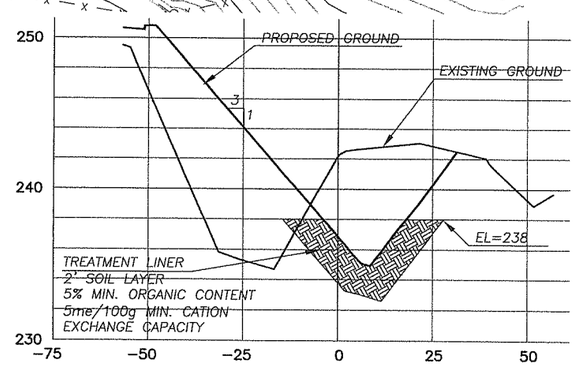

SECTION B-B

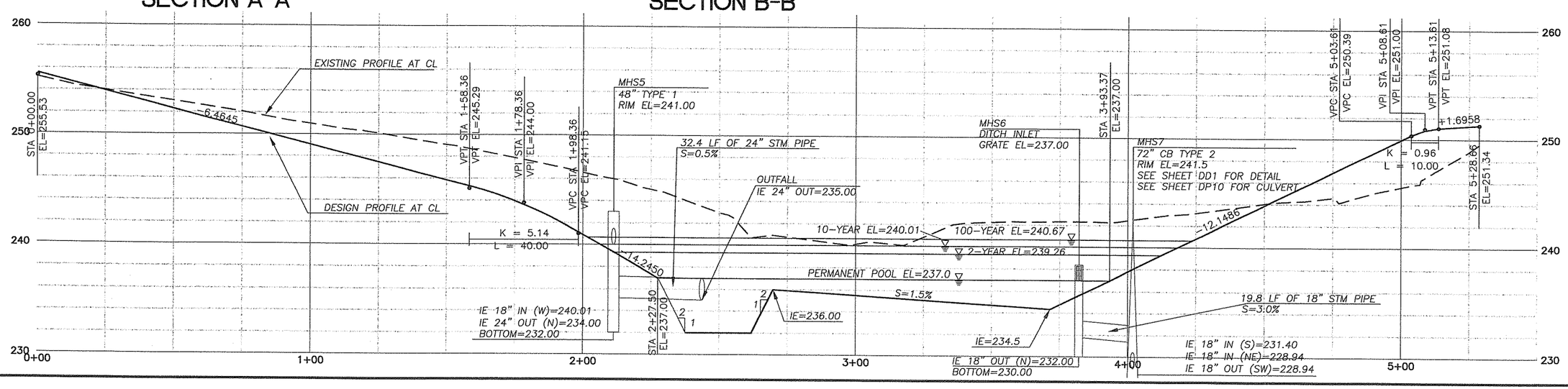

DESIGNED	JB
DRAWN	RK
CRP	311522
HOR.	1"=20'
VERT.	1"=5'
DATE	3/05/04
DWG:	SWF1
SHEET 12	OF 55

CALL 48 HOURS BEFORE YOU DIG
1-800-553-4344
"It's the Law"
NORTHWEST UTILITY NOTIFICATION CENTER

JOSEPH E. WORKMAN
STATE OF WASHINGTON
36971
REGISTERED PROFESSIONAL ENGINEER
3/11/04
EXPIRES MARCH 17, 2004

DESIGN & ENGINEERING DIVISION
DESIGN SECTION

NE 10TH AVENUE
STORMWATER CONTROL FACILITY #1

proud past, promising future
CLARK COUNTY
WASHINGTON

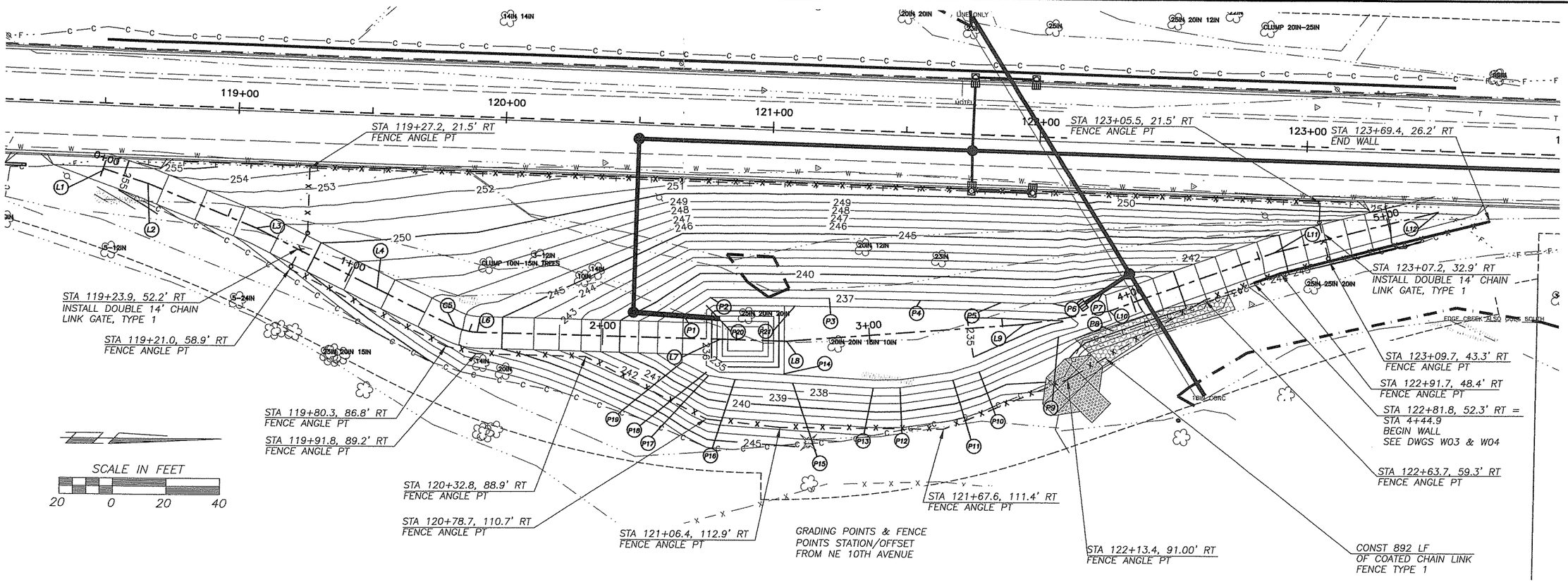

STORMWATER FACILITY 1 ALIGNMENT

ITEM	CONTROL POINT	STATION	NORTHING	EASTING	DIRECTION	DISTANCE	DELTA ANGLE	TANGENT	RADIUS	ARC LENGTH	CHORD LENGTH
L1	BOP ALIGN. 1	0+00	179521.44	1089210.00	N 18°06'50" E	17.62					
L2		0+17.62	179538.19	1089215.47	N 22°20'02" E	43.80					
L3		0+61.42	179578.70	1089232.12	N 26°10'36" E	50.50					
L4		1+11.92	179624.02	1089254.39	N 25°54'49" E	32.49					
	PC	1+44.41	179653.25	1089268.60							
	RADIUS	N/A	179661.99	1089250.60			-24°37'25"	4.37	20.00	8.60	8.53
C5	PI	1+48.78	179657.17	1089270.50							
L6	PT	1+53.01	177928.72	1088960.97	N 1°17'16" E	91.07					
L7		2+44.08	177943.46	1088947.71	N 1°17'17" E	24.75					
L8		2+68.83	177958.82	1088933.04	N 4°24'07" W	89.30					
L9		3+58.13	177968.60	1088921.89	N 9°32'13" W	32.38					
L10		3+90.51	178015.54	1088860.36	N 19°37'12" W	65.32					
L11		4+55.83	178027.41	1088868.13	N 14°16'48" W	63.39					
L12	EOP	5+19.22	177966.51	1088958.86							

STORMWATER FACILITY 1 GRADING POINTS

PNT	STATION	OFFSET	ELEV	DESC
P1	120+68.8	71.9' RT	237	POND BOTTOM
P2	120+78.7	65.0' RT	237	POND BOTTOM
P3	121+23.1	63.8' RT	237	POND BOTTOM
P4	121+57.3	63.2' RT	237	POND BOTTOM
P5	121+87.4	63.0' RT	237	POND BOTTOM
P6	122+06.9	62.7' RT	237	POND BOTTOM
P7	122+25.3	58.3' RT	237	POND BOTTOM
P8	122+30.0	72.2' RT	237	POND BOTTOM
P9	122+09.4	75.1' RT	237	POND BOTTOM
P10	121+80.2	89.4' RT	237	POND BOTTOM
P11	121+70.5	92.8' RT	237	POND BOTTOM
P12	121+50.8	96.3' RT	237	POND BOTTOM
P13	121+40.7	96.8' RT	237	POND BOTTOM
P14	121+11.1	92.1' RT	236	WQ TOP
P15	121+10.5	96.1' RT	237	POND BOTTOM
P16	120+88.9	95.5' RT	237	POND BOTTOM
P17	120+78.9	95.9' RT	237	POND BOTTOM
P18	120+78.0	93.1' RT	236	WQ TOP
P19	120+68.9	89.6' RT	237	POND BOTTOM
P20	120+77.3	93.1' RT	236	WQ TOP
P21	120+10.4	89.6' RT	236	WQ TOP

GEOGRID SCHEDULE

A	A	TENSAR UX 1500SB
B	B	TENSAR UX 1600SB
C	C	TENSAR UXK 160060

*GEOGRID LENGTH IS MEASURED PERPENDICULAR TO WALL AND EXTENDS FROM WALL INTO ROADWAY EMBANKMENT THE LENGTH INDICATED. THE LENGTHS INDICATED ARE FOR TYPES B AND C ONLY. THE LENGTH FOR TYPE A IS 8'0" FOR ALL WALLS.

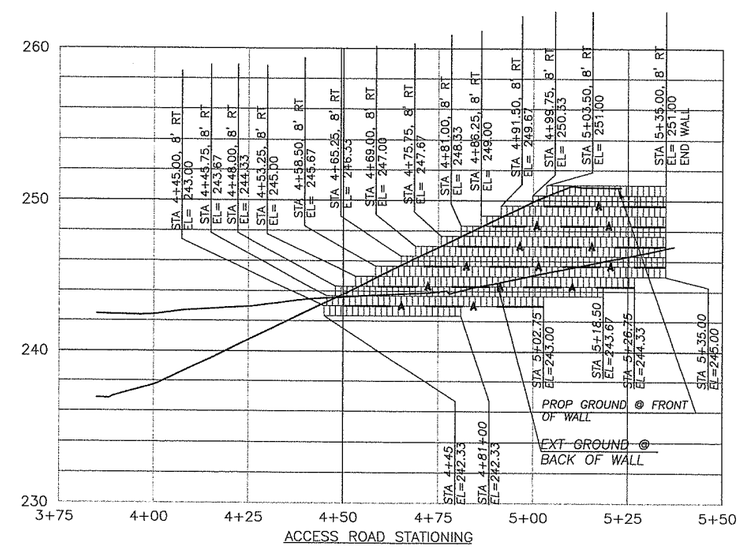

DESIGNED JB
DRAWN RK
CRP 311522
HOR. 1"=20'
VERT. 1"=5'
DATE 3/05/04
DWG. SWF2
SHEET 13 OF 55

CALL 48 HOURS BEFORE YOU DIG
1-800-553-4344
"It's the Law"
NORTHWEST UTILITIES NOTIFICATION CENTER

STATE OF WASHINGTON
JAMES A. BARNETT
34471
REGISTERED PROFESSIONAL ENGINEER
EXPIRES MARCH 17, 2005

DESIGN & ENGINEERING DIVISION
DESIGN SECTION

NE 10TH AVENUE
STORMWATER CONTROL FACILITY #1

proud past, promising future
CLARK COUNTY
WASHINGTON

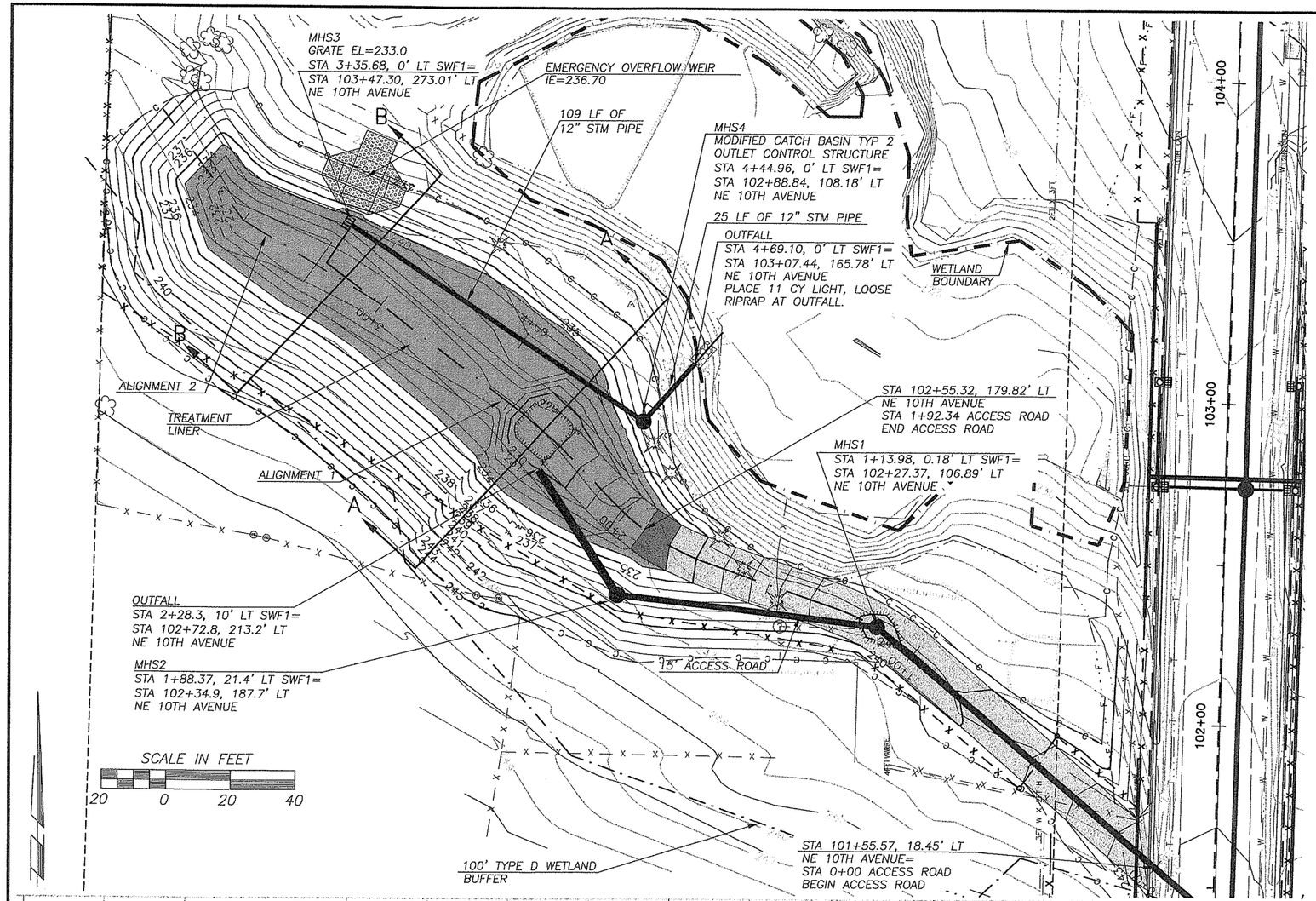

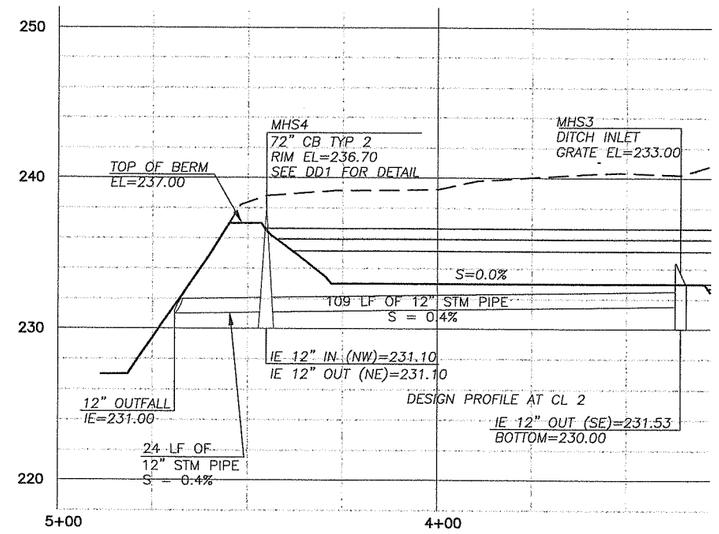

OUTLET PIPE

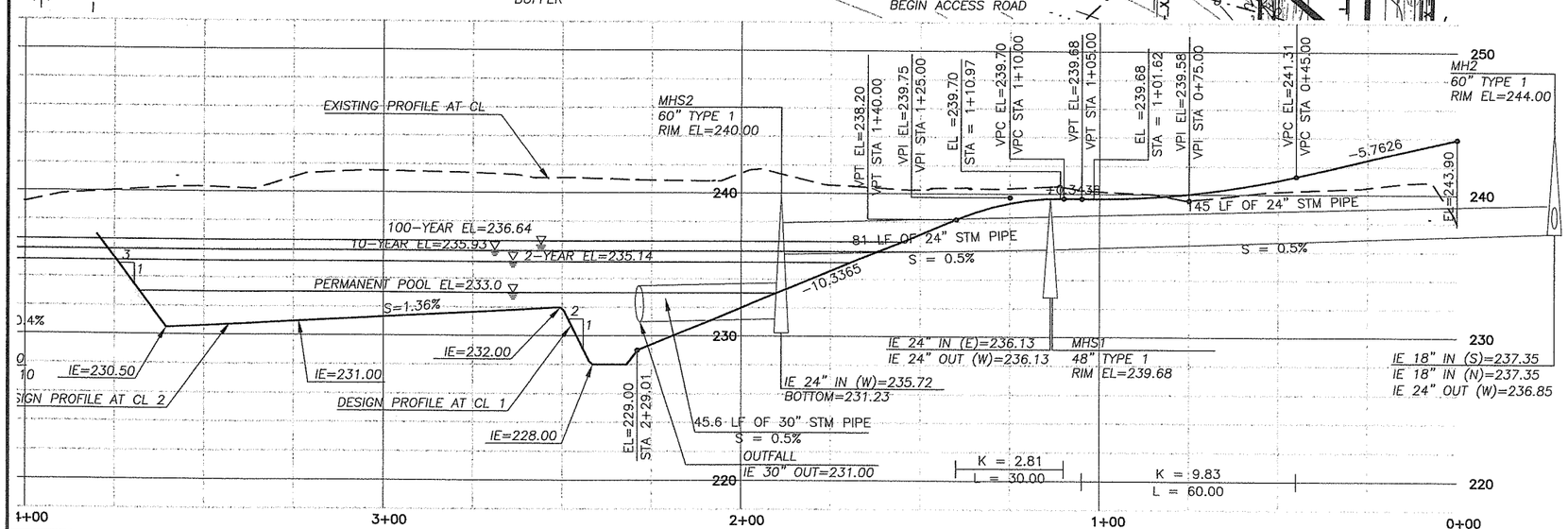

DESIGNED	JB
DRAWN	RK
CRP	311522
HOR.	1"=20'
VERT.	1"=5'
DATE	3/05/04
DWG:	SWF3
SHEET 14	OF 55

CALL 48 HOURS BEFORE YOU DIG
1-800-553-4344
"It's the Law"
NORTHWEST UTILITIES NOTIFICATION CENTER

JUDSON BARNETT STATE OF WASHINGTON 33471 REGISTERED PROFESSIONAL ENGINEER
EXPIRES/MARCH 17, 2006

DESIGN & ENGINEERING DIVISION
DESIGN SECTION

NE 10TH AVENUE
STORMWATER CONTROL FACILITY #2

proud past, promising future

CLARK COUNTY
WASHINGTON

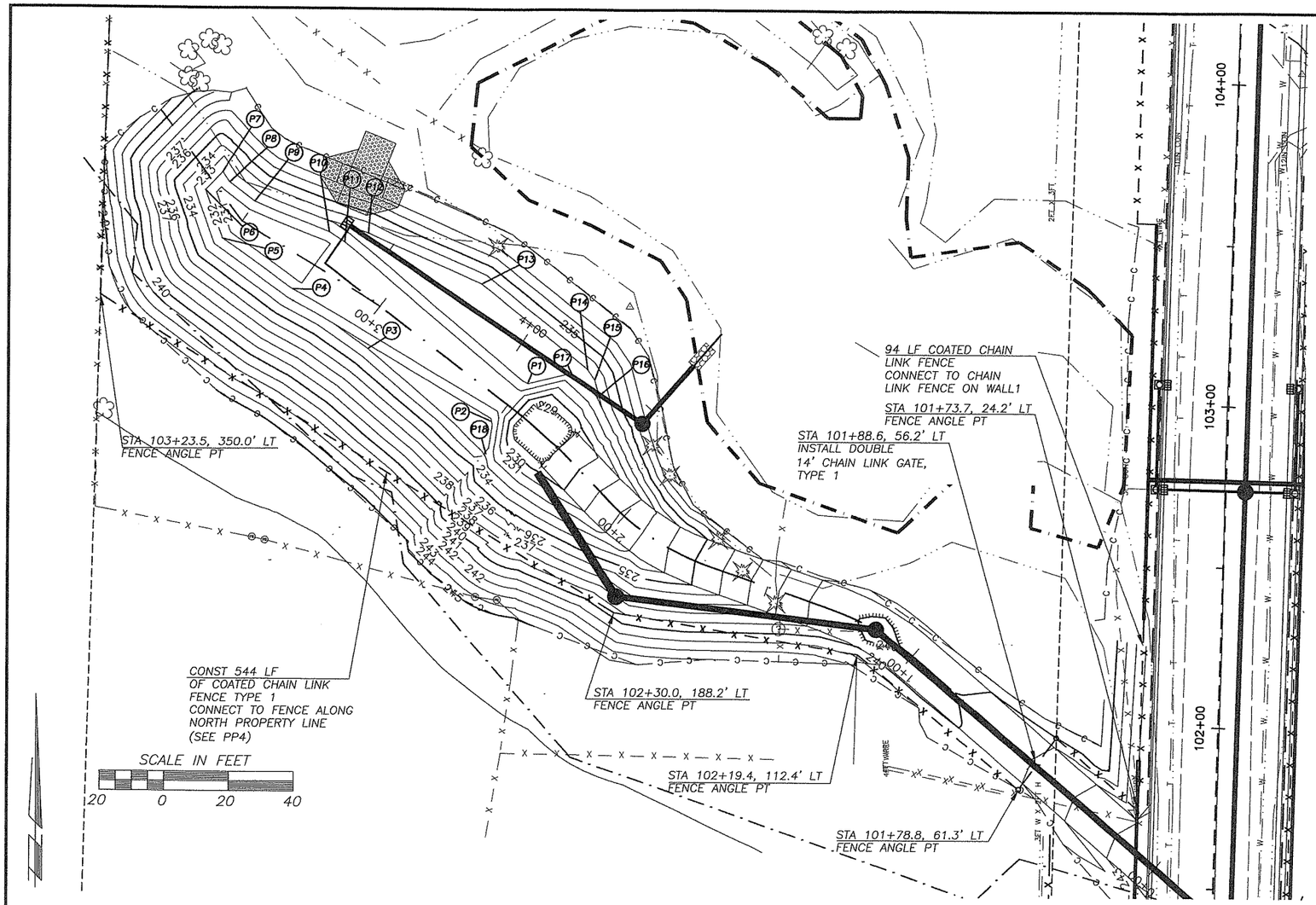

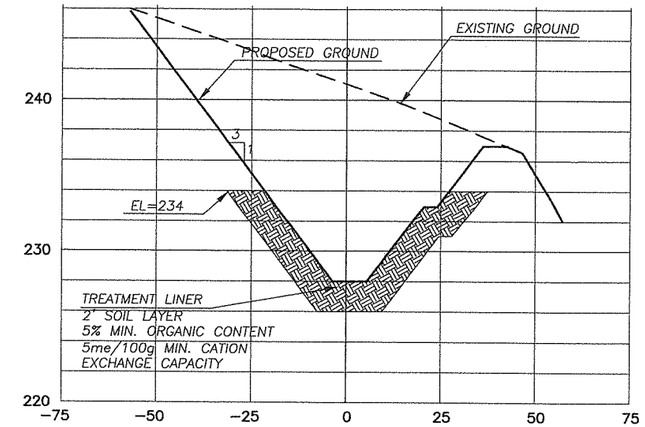

SECTION A-A

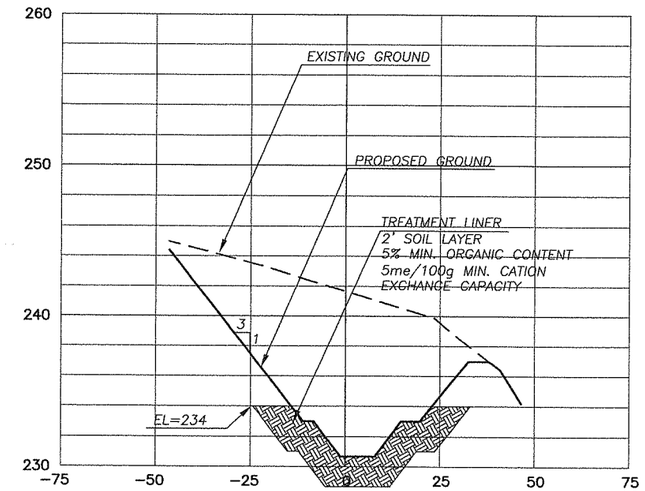

SECTION B-B

STORMWATER FACILITY 2 ALIGNMENTS

ITEM	CONTROL POINT	STATION	NORTHING	EASTING	DIRECTION	DISTANCE	DELTA ANGLE	TANGENT	RADIUS	ARC LENGTH	CHORD LENGTH
1L1	BOP ALIGN. 1	0+00	177828.94	1089117.98	N 48°42'52" W	98.44					
	PC	0+98.44	177893.89	1089044.01							
	RADIUS	N/A	177833.69	1088991.32			22°08'09"	15.65	80.00	30.91	30.72
1C2	PI	1+13.70	177904.20	1089032.23							
1L3	PT	1+29.35	177909.30	1089017.44	N 70°53'16" W	39.89					
	PC	1+69.24	177922.37	1088979.75							
	RADIUS	N/A	177994.17	1089004.05			29°18'42"	19.82	75.80	38.78	38.36
1C4	PI	1+88.20	177928.72	1088960.97							
1L5	PT	2+08.02	177943.46	1088947.71	N 43°40'11" W	21.24					
1L6		2+29.26	177958.82	1088933.04	N 48°44'55" W	14.84					
1L7		2+44.10	177968.60	1088921.89	N 52°39'33" W	77.39					
1L8		3+21.49	178015.54	1088860.36	N 33°13'48" E	14.19					
1L9		3.35.68	178027.41	1088868.13	S 56°07'41" E	109.28					
1L10		4+44.96	177966.51	1088958.86	N 41°09'59" E	37.10					
1L11	EOP	4+82.06	177994.44	1088983.29							
2L1	BOP ALIGN. 2	3+00	178002.51	1088877.44	N 58°33'45" W	50.18					
2L2		3+50.18	178028.68	1088834.63	N 36°19'51" W	42.48					
2L3	EOP	3+92.66	178062.90	1088809.46							

STORMWATER FACILITY 2 GRADING POINTS

PNT	STATION	OFFSET	ELEV	DESC
P1	4+8.5	9.4' RT	233	POND BOTTOM
P2	2+50.9	7.2' LT	233	POND BOTTOM
P3	2+95.0	12.7' LT	233	POND BOTTOM
P4	3+25.8	9.8' LT	232	WQ TOP
P5	N178023.43	E 1088828.66	232	WQ TOP
P6	3+64.6	3.4' LT	232	WQ TOP
P7	3+66.0	4.3' RT	232	WQ TOP
P8	3+62.2	4.1' RT	232	WQ TOP
P9	3+52.8	6.8' RT	232	WQ TOP
P10	3+30.4	4.5' RT	232	WQ TOP
P11	3+30.6	1.2' RT	232	WQ TOP
P12	3+41.5	1.4' LT	233	POND BOTTOM
P13	3+79.5	8.0' LT	233	POND BOTTOM
P14	4+21.5	4.4' LT	233	POND BOTTOM
P15	4+25.2	2.9' LT	233	POND BOTTOM
P16	4+28.8	1.1' RT	233	POND BOTTOM
P17	4+18.0	0.7' LT	233	POND BOTTOM
P18	2+46.2	16.1' LT	233	POND BOTTOM

DESIGNED	JB
DRAWN	RK
CRP	311522
HOR.	1"=20'
VERT.	1"=5'
DATE	3/05/04
DWG:	SWF4
SHEET 15	OF 55

CALL 48 HOURS BEFORE YOU DIG 1-800-553-4344 "It's the Law" NORTHWEST UTILITIES NOTIFICATION CENTER

STATE OF WASHINGTON JAMES A. BARNETT 34471 REGISTERED PROFESSIONAL ENGINEER 3/5/04 EXPIRES MARCH 17, 2004

DESIGN & ENGINEERING DIVISION
DESIGN SECTION

NE 10TH AVENUE
STORMWATER CONTROL FACILITY #2

proud past, promising future
CLARK COUNTY WASHINGTON

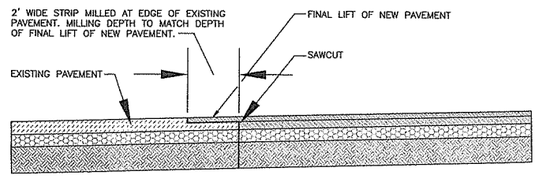

LAP JOINT DETAIL

NTS

NOTES:

1. ALL JOINTS SHALL BE CLEANED AND EDGED.
2. CHANGES IN LEVEL UP TO 1/4" MAY BE VERTICAL AND WITHOUT EDGE TREATMENT. CHANGES IN LEVEL BETWEEN 1/4" AND 1/2" SHALL BE BEVELED WITH A SLOPE NO GREATER THAN 2:1.
3. CEMENT CONCRETE APPROACHES SHALL BE CONSTRUCTED OF AIR-ENTRAINED CLASS 3000 AND MAY BE POURED INTEGRAL WITH CURB.
4. COMMERCIAL DRIVEWAY REQUIRES REINFORCING STEEL (6"x6" 10 GA WIRE MESH) MIN. 3" COVER.
5. 3" DEPTH 3/4"-0 CRUSHED AGGREGATE BASE COMPACTED TO 95% OF MAX. DRY DENSITY.
6. SUBGRADE PREPARATION PER WSDOT STD. SPEC. 2-06.3(1).

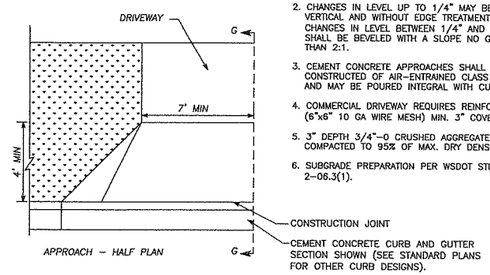

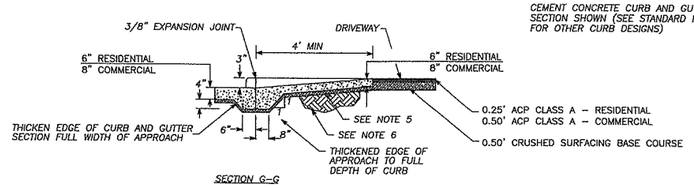

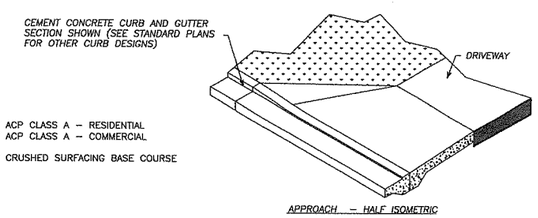

CEMENT CONCRETE APPROACH

NTS

OPEN CUT UTILITY TRENCH BACKFILL DETAIL (COLLECTOR OR ARTERIAL)

SURFACING:

1. All A.C.P. shall be saw cut to provide a straight, clean edge prior to paving.
2. The cut line shall be one continuous straight line from the outer excavation limits of manhole, valve box, etc. to manhole, valve box, etc.
3. Pave with an 0.5 ft. minimum compacted depth A.C.P., or match existing or design section, whichever is greater.
4. Lifts for A.C.P. (Class A) shall be 0.15 ft. minimum and 0.35 ft. maximum for non-surface lifts (0.25' maximum for surface lift); the temperature shall be 250 degree minimum, 350 degree maximum, compacted to 92% of the theoretical maximum.
5. All joints shall be tacked, sealed and sanded.
6. Trench shall be plated until paved.
7. For longitudinal installation, full lane width including turn lanes restoration shall be required or as directed by Clark County. For transverse installation refer to surfacing restoration of detail U6. See Section 12.20A.120.C.

BASE COURSE:

1. 0.80 ft. minimum depth (1-1/4" minus) C.S.B.C. (W.S.D.O.T. approved material).
2. Compacted to 95% of maximum density. See trench zone.
3. Equivalent depth of A.T.B. may be substituted.
4. For transverse or diagonal trenches in existing roadway pavement, CDF will be used from the bottom of full pavement section to a maximum CDF section of 3 feet or to 6" above the top of the pipe, which ever is less. See note 13 of Std. Plan UGN of this Manual.

TRENCH ZONE:

1. Granular backfill as approved by local agency or W.S.D.O.T. specifications for granular backfill. Compacted to 95% of maximum density in the trench zone using Method C compaction as per Section 2-03.3(14)C.
2. Native material may be used if approved prior to construction by Clark County.
3. Trench zone width -- see below.

PIPE ZONE:

1. Pipe zone material as specified by utility owner, and shall conform to section 9-03.12(3) WSDOT Specs.
2. 1.0 ft. max. from top of the pipe. 6" from top of pipe when CDF backfill used.

CONDITIONS:

1. A copy of the permit and requirements shall be on the job site at all times.
2. The permit holder shall be responsible for all restoration and maintenance of ditches, shoulders, driveways, landscaping, etc.
3. Call Clark County at 397-2446 twenty-four hours prior to commencing work.

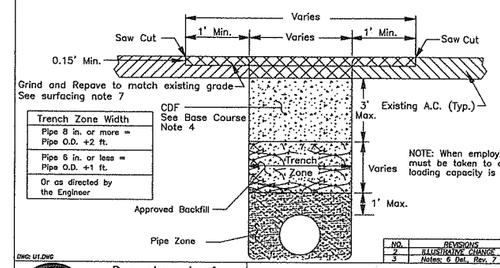

Trench Zone Width
Pipe 8 in. or more = Pipe O.D. +2 ft.
Pipe 6 in. or less = Pipe O.D. +1 ft.
Or as directed by the Engineer

NO.	REVISIONS	DATE	BY
2	ILLUSTRATIVE CHANGE	07/10/01	BK
3	Notes: 6 Del., Rev. 7	12/07/01	SCH

DWG: U1.DWG

Department of Public Works
CLARK COUNTY
WASHINGTON
proud past, promising future

OPEN CUT UTILITY TRENCH BACKFILL DETAIL
COLLECTOR OR ARTERIAL ROADWAY

APPROVED
Peter Capell 7/20/01
COUNTY ENGINEER DATE

STANDARD U1
PLAN No.
DESIGNED
DRAWN
DATE 04/25/03

ROADWAY SHOULDER INCLUDES LAWN AND LANDSCAPE

SHOULDER ROCK:

1. 0.50 ft. minimum depth (1 1/4" minus) crushed rock. (Clark County Approved Material).
2. Compacted to 95% of maximum density. See trench zone.
3. Rock shall extend from E.O.P. to the back of trench at approx. .05 Ft./Ft. slope.

LAWN & LANDSCAPE AREAS:

1. A County approved top soil shall be placed 0.50 Ft. in depth.
2. Area to be restored to match existing.

TRENCH ZONE:

Where the distance from E.O.T. to E.O.P. is less than or equal to the depth of the trench; these conditions shall apply:

1. Granular backfill as approved by local agency or W.S.D.O.T. specifications for granular backfill. Compacted to 95% of maximum density in the trench zone using Method C compaction as per Section 2-03.3 (14)C.
2. Native material may be used if approved prior to construction.
3. Trench zone width -- see below.
4. Shoulder rock or landscaped sections as applicable.

PIPE ZONE:

1. Pipe zone material as specified by utility owner, and shall conform to section 9-03.12(3) WSDOT Specs.
2. 1.0 ft. max. from top of the pipe.

CONDITIONS:

1. A copy of the permit and requirements shall be on the job site at all times.
2. The permit holder shall be responsible for all restoration and maintence of ditches, shoulders, driveways, landscaping, ect.
3. Call Clark County at 397-2446 twenty-four hours prior to commencing work.

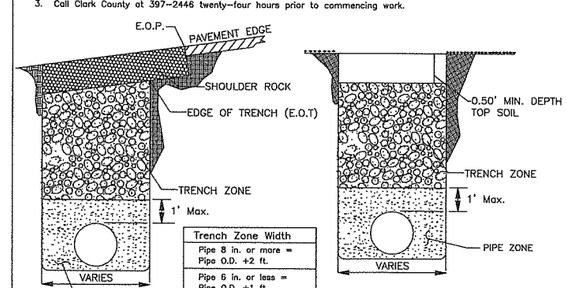

Trench Zone Width
Pipe 8 in. or more = Pipe O.D. +2 ft.
Pipe 6 in. or less = Pipe O.D. +1 ft.
Or as directed by the Engineer

NO.	REVISIONS	DATE	BY
1	NOTE, Fig. 7	05/07/01	BK
2	Pipe Zone Notes	10/07/02	SCH

DWG: U5.DWG

Department of Public Works
CLARK COUNTY
WASHINGTON
proud past, promising future

ROADWAY SHOULDER
INCLUDES LAWN & LANDSCAPE

APPROVED
Peter Capell 5/4/01
COUNTY ENGINEER DATE

STANDARD U5
PLAN No.
DESIGNED
DRAWN
DATE 04/25/03

DESIGNED	TG
DRAWN	RK
CRP	31/522
HOR.	NA
VERT.	NA
DATE	3/05/04
DWG:	RD1
SHEET 16	OF 55

CALL 48 HOURS BEFORE YOU DIG
1-800-553-4344
"It's the Law"
NORTHWEST UTILITIES NOTIFICATION CENTER

THOMAS D. GRANGE
STATE OF WASHINGTON
20968
REGISTERED PROFESSIONAL ENGINEER
EXPIRES:JANUARY 20, 2006

DESIGN & ENGINEERING DIVISION
DESIGN SECTION

NE 10TH AVENUE
ROADWAY DETAILS

proud past, promising future
CLARK COUNTY
WASHINGTON

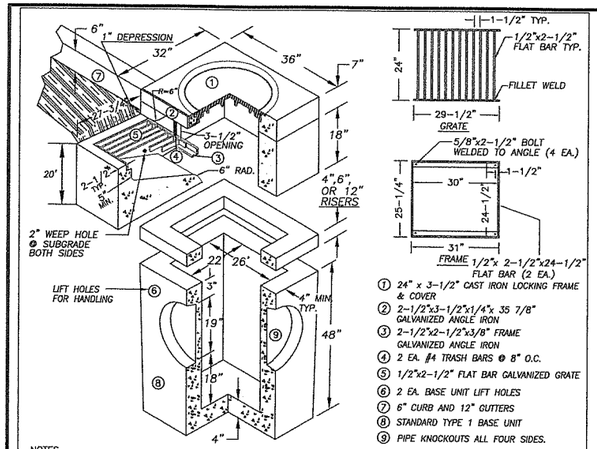

1. 24" x 3-1/2" CAST IRON LOCKING FRAME & COVER
2. 2-1/2"x3-1/2"x1/4"x 35 7/8" GALVANIZED ANGLE IRON
3. 2-1/2"x2-1/2"x3/8" FRAME GALVANIZED ANGLE IRON
4. 2 EA. #4 TRASH BARS @ 8" O.C.
5. 1/2"x2-1/2" FLAT BAR GALVANIZED GRATE
6. 2 EA. BASE UNIT LIFT HOLES
7. 6" CURB AND 12" GUTTERS
8. STANDARD TYPE 1 BASE UNIT
9. PIPE KNOCKOUTS ALL FOUR SIDES.

NOTES

1. COMBINATION CURB INLET TO BE CONSTRUCTED IN ACCORDANCE WITH ASTM C478 & C890 UNLESS SHOWN ON PLANS OR NOTED IN STANDARD SPECIFICATIONS.
2. REINFORCING FOR INLET UNIT, 3 EA. #3 HORZONTAL BARS; REINFORCING FOR TOP UNIT, 2 EA. #3 HORZONTAL BARS; REINFORCING FOR INLET SLOPED BASE, 4x4 MESH.
3. ALL REBAR TO MEET ASTM A615 GRADE 60.
4. AS AN ACCEPTABLE ALTERNATIVE TO REBAR, WELDED WIRE FABRIC HAVING A MIN. AREA OF 0.12 SQAURE INCHES PER FOOT MAY BE USED. WELDED WIRE FABRIC SHALL COMPLY TO ASTM A497. WIRE FABRIC SHALL NOT BE PLACED IN KNOCKOUTS.
5. ALL REINFORCED CAST-IN-PLACE CONCRETE SHALL BE CLASS 4,000.
6 PRECAST BASES SHALL BE FURNISHED WITH CUTOUTS OR KNOCKOUTS. KNOCKOUTS SHALL HAVE A WALL THICKNESS OF 2" MIN. ALL PIPE SHALL BE INSTALLED IN FACTORY PROVIDED KNOCKOUTS. UNUSED KNOCKOUTS NEED NOT BE GROUTED IF WALL IS LEFT INTACT.
7. KNOCKOUTS OR CUTOUT HOLE SIZE IS EQUAL TO PIPE OUTER DIAM. PLUS INLET WALL THICKNESS.
8. ROUND KNOCKOUTS MAY BE ON ALL 4 SIDES WITH MAX. DIAM. OF 17".
9. THE MAX. DEPTH FROM THE FINISHED GRADE TO THE PIPE INVERT IS 5'-0".
10. ANY PROTUDING ENDS OF PIPES SHALL BE TRIMMED FLUSH WITH THE INSIDE WALLS AND GROUTED TO THE SATISFACTION OF ENGINEER.
11. GRATE TO HAVE 1" DEPRESSION AT GUTTER INLET WITH GUTTER TO BE TAPERED DOWN TO INLET.
12. INSTALL REMOVABLE APWA TYPE 60A TRAP OR EQUAL, SEE STD. PLAN D2.1.
13. CONTRACTOR SHALL HAVE THE OPTION OF FURNISHING PRECAST OR CAST-IN-PLACE INLET STRUCTURES, UNLESS SPECIFIED.
14. SEE STD. PLAN 4.1 FOR BASIN GUTTER PAN DETAIL.

NO.	REVISIONS	DATE	BY

DWG: D3-0.DWG

Department of Public Works
CLARK COUNTY WASHINGTON
proud past, promising future

STANDARD TYPE 1 COMBINATION CURB INLET

APPROVED
Peter Capen 01/01/04
COUNTY ENGINEER DATE

STANDARD D3.0
PLAN No.
DESIGNED SCH
DRAWN SCH
DATE 08/19/02

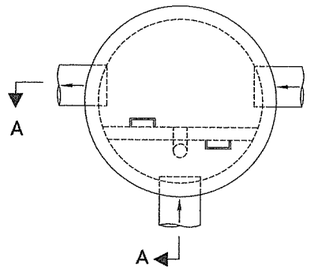

SWCF 1
PLAN VIEW

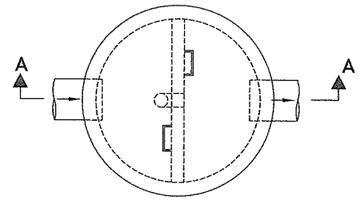

SWCF 2
PLAN VIEW

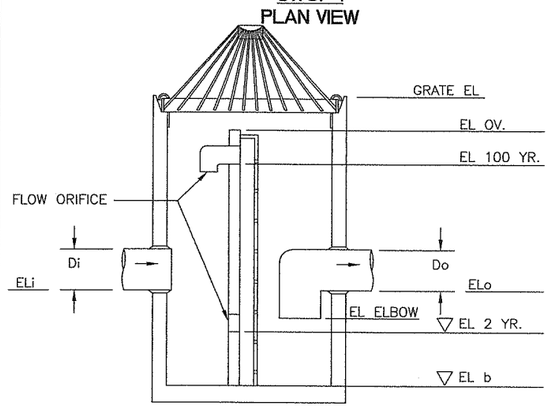

SECTION A-A

OUTLET CONTROL STRUCTURE

OUTLET CONTROL STRUCTURE
TABLE OF DIMENSIONS/ELEVATIONS

		MHS7 SWCF #1 NORTH	MHS4 SWCF #2 SOUTH
MH DIAM.	A.	72"	72"
PIPE DIAMS.	Di	18"	12"
	Do	18"	12"
ELEVATIONS	ELb	227.00	230.00
	ELo	228.94	231.10
	EL ELBOW	227.94	230.10
	ELi	231.40	233.00
	EL 2 yr	237.00	233.00
	EL 100 yr	239.50	235.00
	EL OV.	240.67	236.65
	GRATE(RIM) EL	241.50	236.70
ORIFICE DIAM.	d 2 yr	0.5"	0.75"
	d 100 yr	2"	1.75"

OUTLET CONTROL STRUCTURE

NOTES:
1. SEE WDOT STANDARD PLAN B-3a FOR CONSTRUCTION DETAILS AND ADDITIONAL INFORMATION.

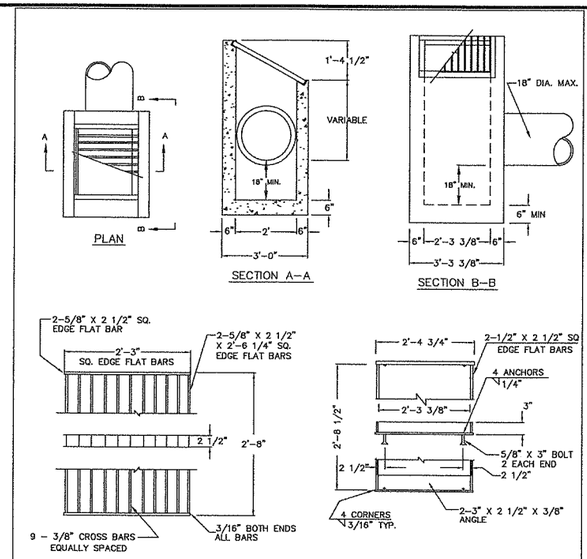

NOTES:
1. DITCH INLET CONSTRUCTION IN ACCORDANCE WITH ASTM C-478
2. CATCH BASIN, FRAME, AND GRATES SHALL BE FLAT BAR STEEL OR APPROVED EQUAL.
3. INSIDE FRAME DIMENSIONS: 2'-3 3/8"x 2'-8 1/2"".
4. 3/8" CROSS BARS SHALL BE FLUSH WITH THE GRATE SURFACE AND MAY BE FILLET WELDED, RESISTANCE WELDED OR ELECTROFORGED TO BEARING BARS.

NO.	REVISIONS	DATE	BY

DWG: D6.DWG

Department of Public Works
CLARK COUNTY WASHINGTON
proud past, promising future

DITCH INLET

APPROVED
Peter Capen 01/01/04
COUNTY ENGINEER DATE

STANDARD D6
PLAN No.
DESIGNED SCH
DRAWN SCH
DATE 08/17/02

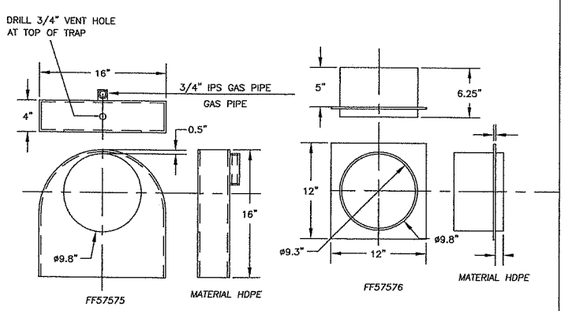

LOW PROFILE ELBOW
NTS

ELBOW INSERT
NTS

ZYMARK BRAND OR EQUIVALENT

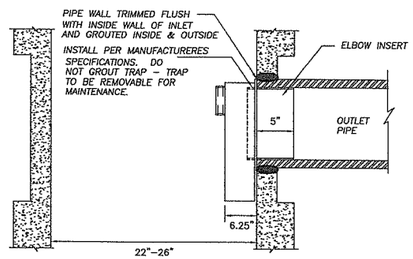

NO.	REVISIONS	DATE	BY

DWG: D2-1.DWG

Department of Public Works
CLARK COUNTY WASHINGTON
proud past, promising future

CATCH BASIN OUTLET PIPE TRAP

APPROVED
Peter Capen 01/01/04
COUNTY ENGINEER DATE

DESIGNED SCH
DRAWN SCH
DATE 08/23/02

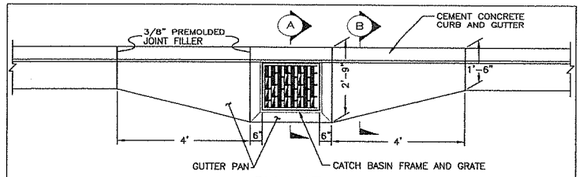

PLAN VIEW
CATCH BASIN GUTTER PAN

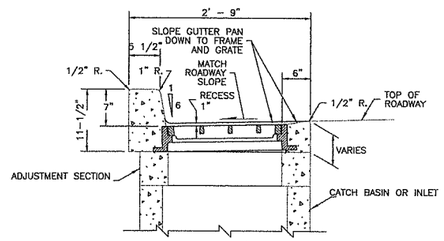

SECTION (A)

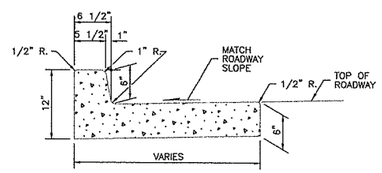

SECTION (B)

NO.	REVISIONS	DATE	BY

DWG: D4-1.DWG

Department of Public Works
CLARK COUNTY WASHINGTON
proud past, promising future

CATCH BASIN GUTTER PAN

APPROVED
Peter Capen 01/01/04
COUNTY ENGINEER DATE

STANDARD D4.1
PLAN No.
DESIGNED SCH
DRAWN SCH
DATE 07/07/03

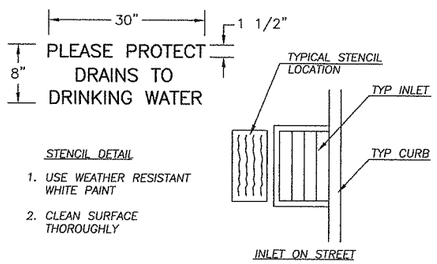

STENCIL DETAIL
1. USE WEATHER RESISTANT WHITE PAINT
2. CLEAN SURFACE THOROUGHLY

INLET STENCIL DETAIL
NTS

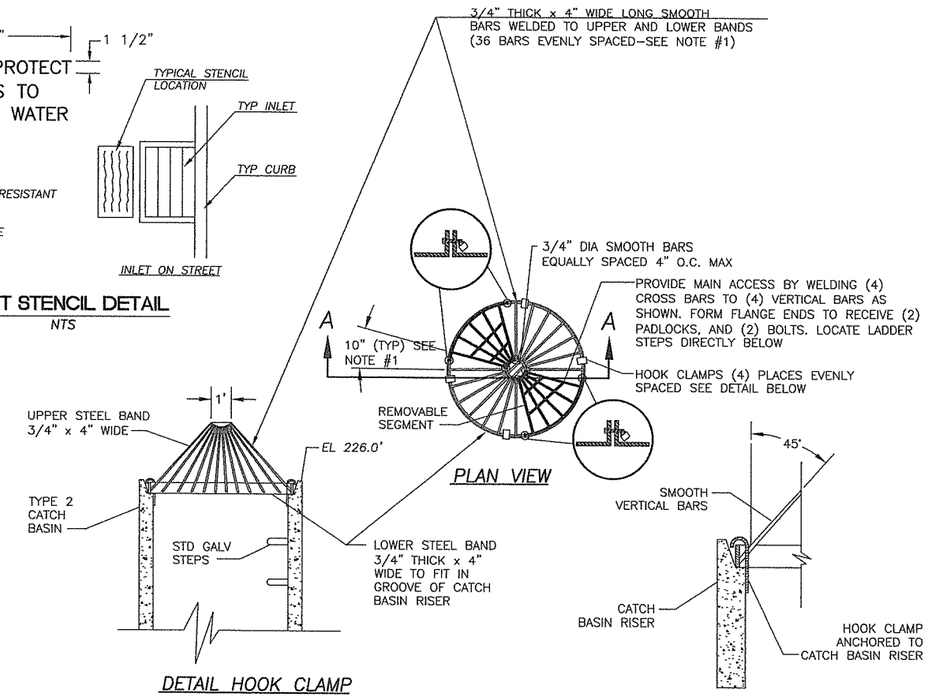

DROP INLET TRASH RACK
NTS

DESIGNED	TG
DRAWN	RK
CRP	311522
HOR.	NA
VERT.	NA
DATE	3/05/04
DWG.	DD1
SHEET 17	OF 55

CALL 48 HOURS BEFORE YOU DIG 1-800-553-4344 "It's the Law" NORTHWEST UTILITIES NOTIFICATION CENTER

STATE OF WASHINGTON JEFFREY E. SCHMIDT 35471 REGISTERED PROFESSIONAL ENGINEER EXPIRES: MARCH 17, 2005

DESIGN & ENGINEERING DIVISION
DESIGN SECTION

NE 10TH AVENUE
DRAINAGE DETAILS

proud past, promising future
CLARK COUNTY WASHINGTON

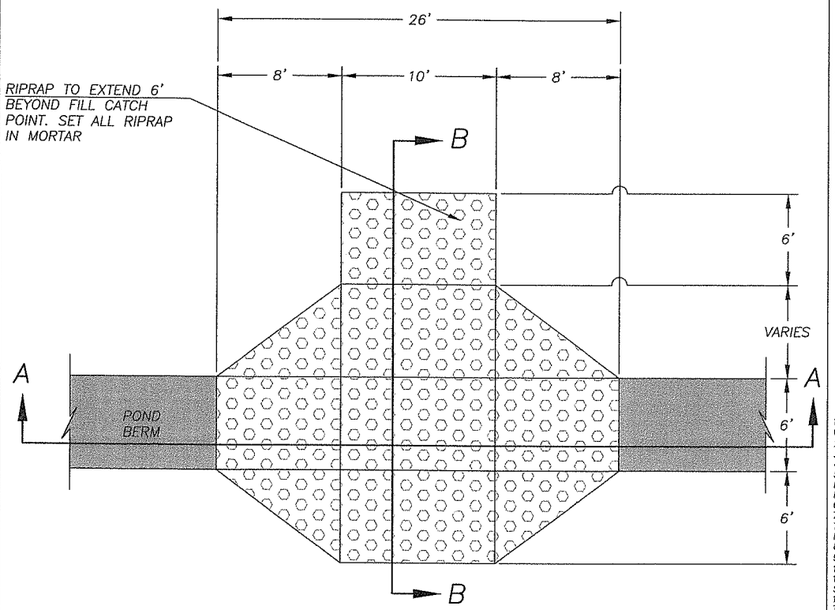

PLAN VIEW
NTS

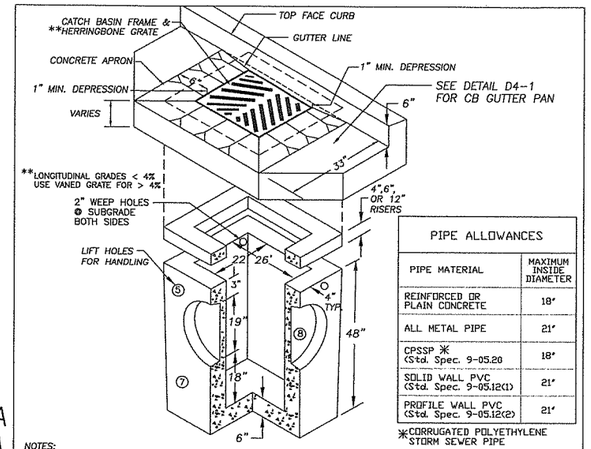

PIPE ALLOWANCES	
PIPE MATERIAL	MAXIMUM INSIDE DIAMETER
REINFORCED OR PLAIN CONCRETE	18"
ALL METAL PIPE	21"
CPSSP * (Std. Spec. 9-05.20)	18"
SOLID WALL PVC (Std. Spec. 9-05.12(1)	21"
PROFILE WALL PVC (Std. Spec. 9-05.12(2)	21"

*CORRUGATED POLYETHYLENE STORM SEWER PIPE

NOTES:

1. CURB INLET TO BE CONSTRUCTED IN ACCORDANCE WITH ASTM C478 (AASHTO) M 199) & C890 UNLESS SHOWN ON PLANS OR NOTED IN STANDARD SPECIFICATIONS.
2. REINFORCING FOR INLET UNIT, 3 EA. #4 HORIZONTAL BARS.
3. REINFORCING FOR TOP UNIT, 2 EA. #3 HORIZONTAL BARS.
4. ALL REBAR TO MEET ASTM A615 GRADE 60.
5. AS AN ACCEPTABLE ALTERNATIVE TO REBAR, WELDED WIRE FABRIC HAVING A MIN. AREA OF 0.12 SQUARE INCHES PER FOOT MAY BE USED. WELDED WIRE FABRIC SHALL COMPLY TO ASTM A497. WIRE FABRIC SHALL NOT BE PLACED IN KNOCKOUTS.
6. ALL REINFORCED CAST-IN-PLACE CONCRETE SHALL BE CLASS 4,000.
7. PRECAST BASES SHALL BE FURNISHED WITH CUTOUTS OR KNOCKOUTS. KNOCKOUTS SHALL HAVE A WALL THICKNESS OF 2" MIN. ALL PIPE SHALL BE INSTALLED IN FACTORY PROVIDED KNOCKOUTS. UNUSED KNOCKOUTS NEED NOT BE GROUTED IF WALL IS LEFT INTACT.
8. KNOCKOUTS OR CUTOUT HOLE SIZE IS EQUAL TO PIPE OUTER DIAM. PLUS INLET WALL THICKNESS.
9. ROUND KNOCKOUTS MAY BE ON ALL 4 SIDES WITH MAX. DIAM. OF 20".
10. THE MAX. DEPTH FROM THE FINISHED GRADE TO THE PIPE INVERT IS 5'-0".
11. ANY PROTRUDING ENDS OF PIPES SHALL BE TRIMMED FLUSH WITH THE INSIDE WALLS AND GROUTED TO THE SATISFACTION OF ENGINEER.
12. CATCH BASIN FRAME AND GRATE SHALL BE IN ACCORDANCE WITH WDOT STANDARD SPECIFICATIONS AND MEET THE STRENGTH REQUIREMENTS OF FEDERAL SPECIFICATION RR-F-621D. MATING SURFACES SHALL BE FINISHED TO ASSURE NON-ROCKING FIT WITH ANY COVER POSITION.
13. FRAME MAY BE INSTALLED WITH FLANGE DOWN OR CAST INTO RISER.
14 INSTALL REMOVABLE APWA TYPE 60A TRAP OR EQUAL, SEE STD. PLAN D2.1.
15. CONTRACTOR SHALL HAVE THE OPTION OF FURNISHING PRECAST OR CAST-IN-PLACE INLET STRUCTURES, UNLESS SPECIFIED.

NO.	REVISIONS	DATE	BY

DWG: D4-0.DWG

Department of Public Works
CLARK COUNTY WASHINGTON
proud past, promising future

STANDARD CATCH BASIN TYPE 1

APPROVED
COUNTY ENGINEER — 01/01/04 DATE

STANDARD D4.0
PLAN No.
DESIGNED SCH
DRAWN SCH
DATE 09/02/03

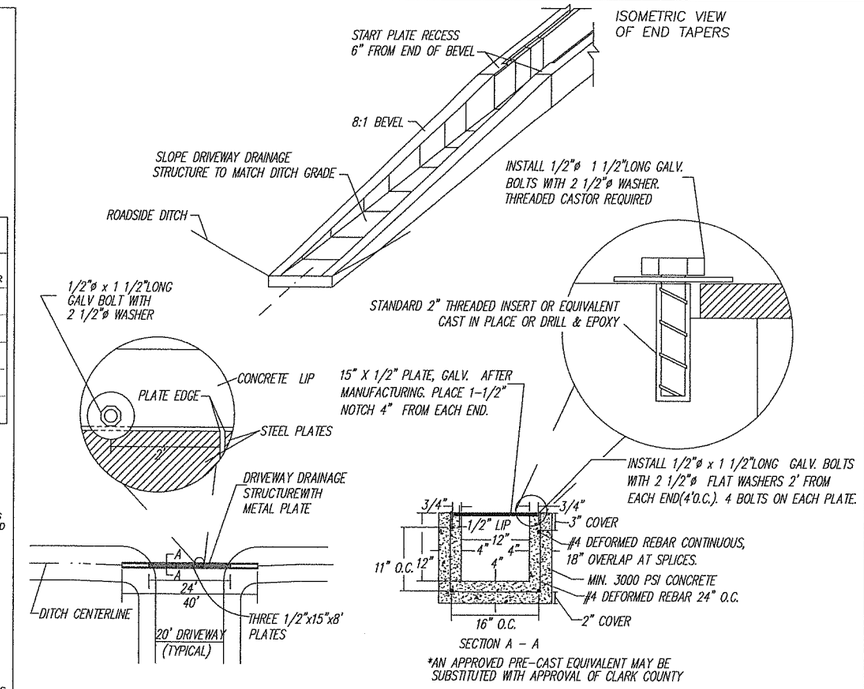

*AN APPROVED PRE-CAST EQUIVALENT MAY BE SUBSTITUTED WITH APPROVAL OF CLARK COUNTY

DRIVEWAY DRAINAGE STRUCTURE
N.T.S.

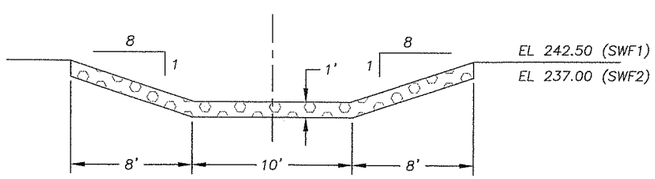

SECTION A-A
NTS

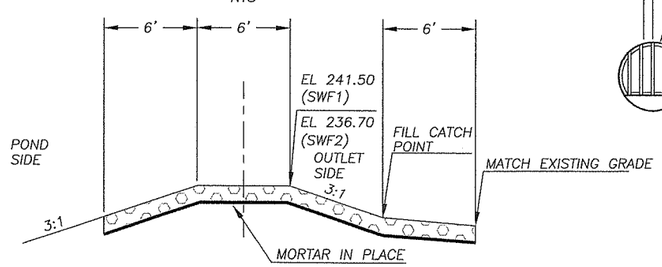

SECTION B-B
NTS

OVERFLOW WEIR

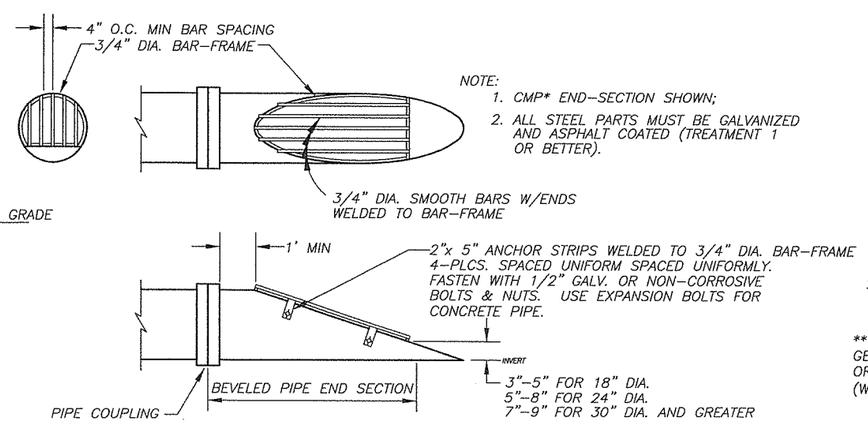

NOTE:
1. CMP* END-SECTION SHOWN;
2. ALL STEEL PARTS MUST BE GALVANIZED AND ASPHALT COATED (TREATMENT 1 OR BETTER).

DEBRIS RACK

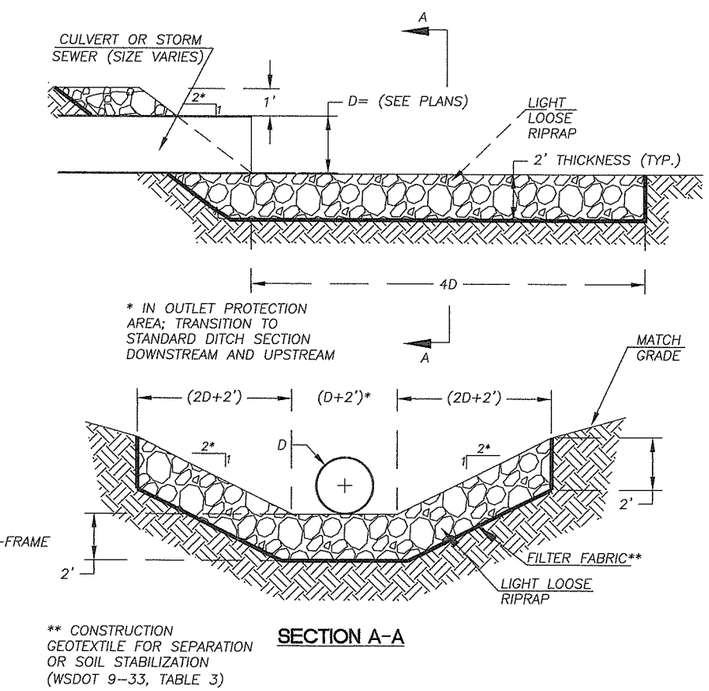

** CONSTRUCTION GEOTEXTILE FOR SEPARATION OR SOIL STABILIZATION (WSDOT 9-33, TABLE 3)

SECTION A-A

OUTFALL DISCHARGE PROTECTION
N.T.S.

DESIGNED	TG
DRAWN	RK
CRP	311522
HOR.	NA
VERT.	NA
DATE	3/05/04
DWG:	D02
SHEET 18	OF 55

CALL 48 HOURS BEFORE YOU DIG 1-800-553-4344 "It's the Law" NORTHWEST UTILITIES NOTIFICATION CENTER

STATE OF WASHINGTON BRIAN T. BIGNELL STATE REGISTERED PROFESSIONAL ENGINEER 34411 EXPIRES: MARCH 17, 2005

DESIGN & ENGINEERING DIVISION
DESIGN SECTION

NE 10TH AVENUE WALKWAY
DRAINAGE DETAILS

proud past, promising future
CLARK COUNTY WASHINGTON

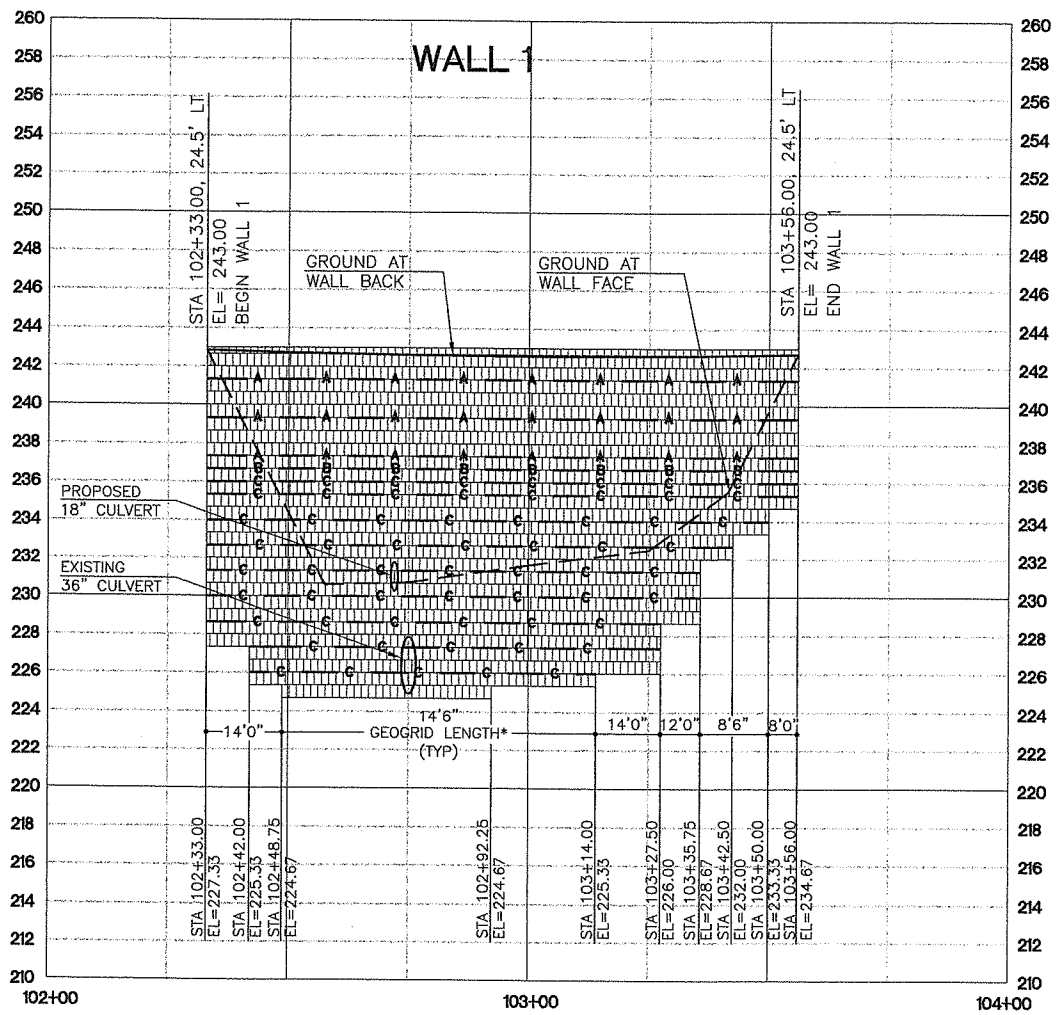

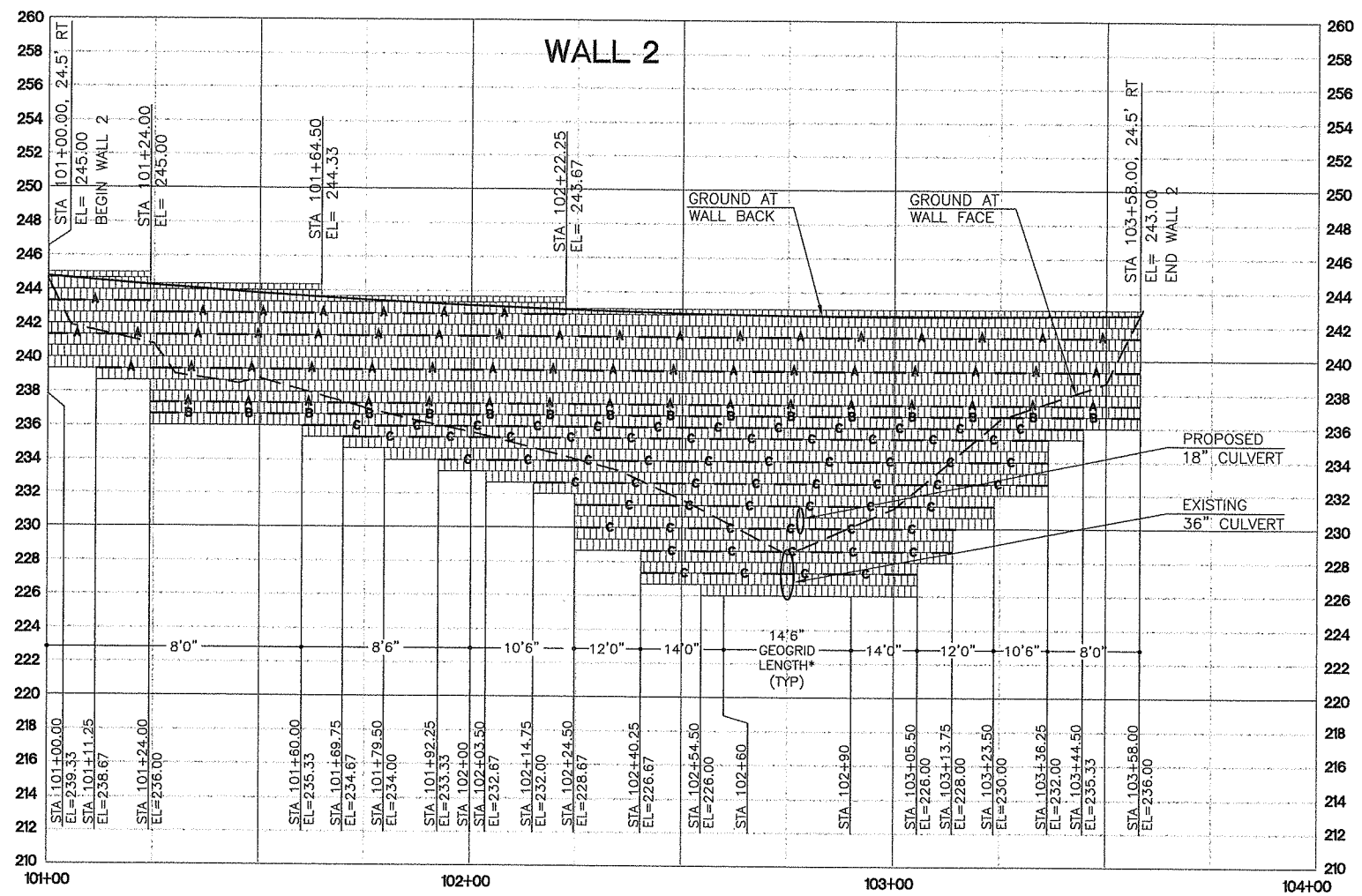

NOTE:
OFFSET IS TO TOP FACE OF WALL.

DOUGLAS L. SARKOZY
STATE OF WASHINGTON
24136
REGISTERED PROFESSIONAL ENGINEER
03/18/04
EXPIRES: OCTOBER 22, 2004

GEOGRID SCHEDULE

A	A	TENSAR UX 1500SB
B	B	TENSAR UX 1600SB
C	C	TENSAR UXK 160060

*GEOGRID LENGTH IS MEASURED PERPENDICULAR TO WALL AND EXTENDS FROM WALL INTO ROADWAY EMBANKMENT THE LENGTH INDICATED. THE LENGTHS INDICATED ARE FOR TYPES B AND C ONLY. THE LENGTH FOR TYPE A IS 8'0" FOR ALL WALLS.

DESIGNED	TG
DRAWN	TG
CRP	311522
HOR.	1"=20'
VERT.	1"=5'
DATE	3/05/04
DWG:	W01
SHEET 19	OF 55

CALL 48 HOURS BEFORE YOU DIG
1-800-553-4344
"It's the Law"
NORTHWEST UTILITIES NOTIFICATION CENTER

THOMAS D. GRANGE
STATE OF WASHINGTON
21788
REGISTERED PROFESSIONAL ENGINEER
EXPIRES: JANUARY 20, 2006
3-11-04

DESIGN & ENGINEERING DIVISION
DESIGN SECTION

NE 10TH AVENUE
SEGMENTAL RETAINING WALL PROFILES

proud past, promising future
CLARK COUNTY
WASHINGTON

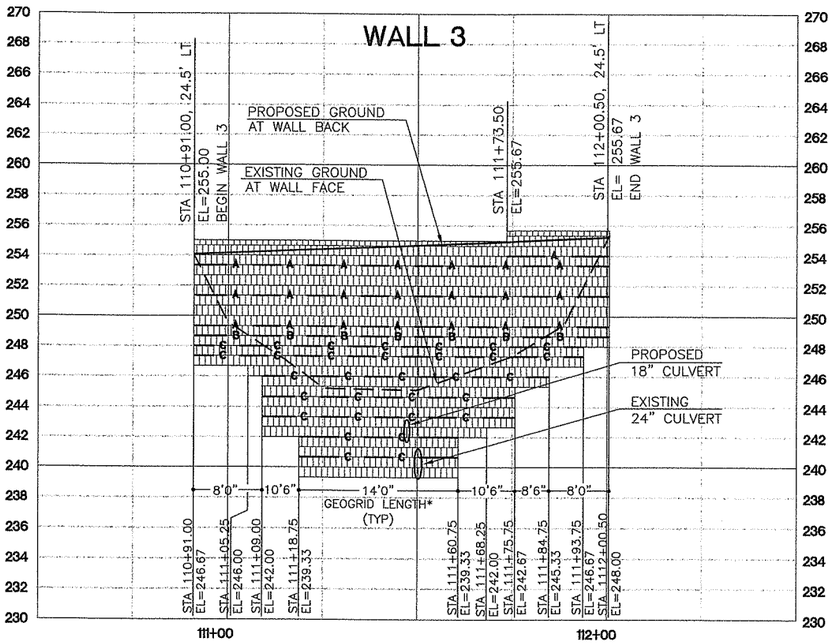

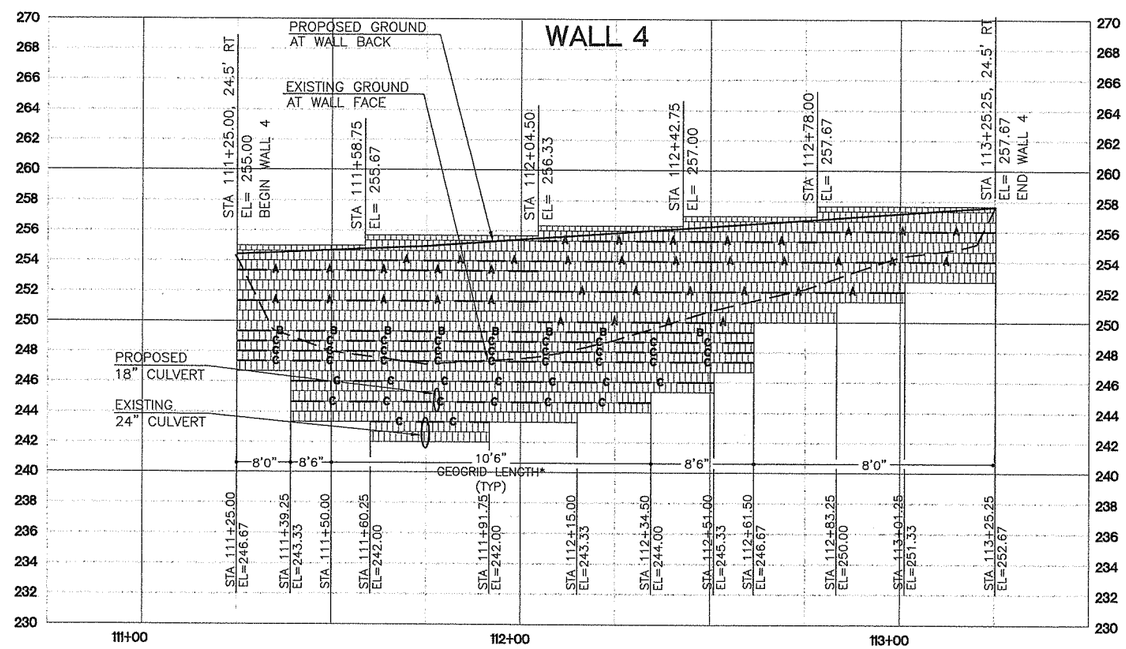

NOTE:
OFFSET IS TO TOP FACE OF WALL.

DOUGLAS L. SARKINEN
STATE OF WASHINGTON
24136
REGISTERED
PROFESSIONAL ENGINEER
03/18/04
EXPIRES: OCTOBER 22, 2004

GEOGRID SCHEDULE

A	A	TENSAR UX 1500SB
B	B	TENSAR UX 1600SB
C	C	TENSAR UXK 160060

*GEOGRID LENGTH IS MEASURED PERPENDICULAR TO WALL AND EXTENDS FROM WALL INTO ROADWAY EMBANKMENT THE LENGTH INDICATED. THE LENGTHS INDICATED ARE FOR TYPES B AND C ONLY. THE LENGTH FOR TYPE A IS 8'0" FOR ALL WALLS.

DESIGNED	TG
DRAWN	TG
CRP	311522
HOR.	1"=20'
VERT.	1"=5'
DATE	3/05/04
DWG:	W02
SHEET 20	OF 55

CALL 48 HOURS BEFORE YOU DIG
1-800-553-4344
"It's the Law"
NORTHWEST UTILITIES NOTIFICATION CENTER

STATE OF WASHINGTON
DOUGLAS L. SARKINEN
24136
REGISTERED
PROFESSIONAL ENGINEER
3/18/04
EXPIRES JANUARY 29, 2005

DESIGN & ENGINEERING DIVISION
DESIGN SECTION

NE 10TH AVENUE
SEGMENTAL RETAINING WALL PROFILES

proud past, promising future
CLARK COUNTY
WASHINGTON

BASE LEVELING PAD NOTES:

1. THE BASE FOUNDATION IS TO BE APPROVED BY THE SITE GEOTECHNICAL ENGINEER PRIOR TO PLACEMENT OF THE LEVELING PAD.

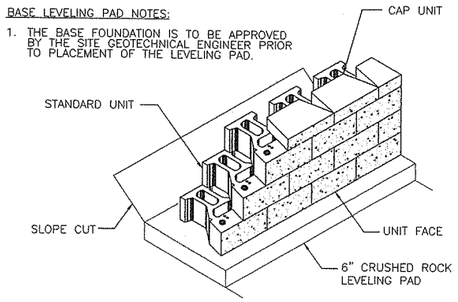

1 / W03 STANDARD UNIT/BASE PAD ISOMETRIC VIEW
SCALE: NO SCALE

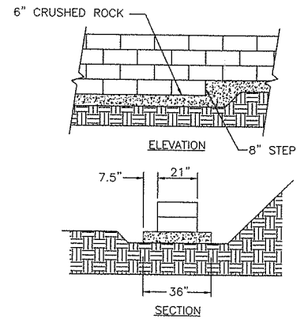

2 / W03 LEVELING PAD DETAIL
SCALE: NO SCALE

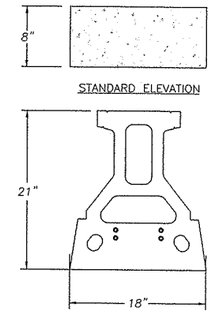

WEIGHT=115#
DIMENSIONS AND WEIGHT MAY VARY BY REGION.

3 / W03 STANDARD UNIT
SCALE: NO SCALE

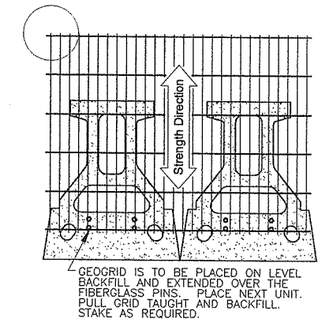

4 / W03 GRID AND PIN CONNECTION
SCALE: NO SCALE

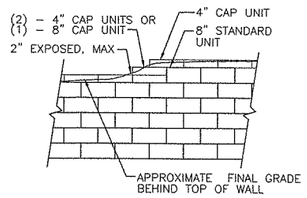

5 / W03 TOP OF WALL STEPS
SCALE: NO SCALE

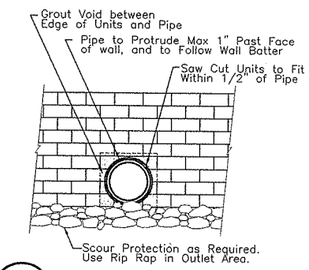

6 / W03 TYP. PIPE OUTLET DETAIL
SCALE: NO SCALE

FILL MATERIALS		
DESCRIPTION	MATERIAL	COMPACTION PER AASHTO T-180
UNIT DRAINAGE FILL (IN CORES AND 1'-0" BEHIND WALL	CLEAN CRUSHED 1" STONE (SEE GRADATION BELOW)	90% - 92%
WALL BACKFILL (REINFORCED FILL)	9-03.9 (3) CRUSHED SURFACING BASE COURSE	95%
RETAINED FILL BEHIND GEOGRID (ROADWAY FILL)	NATIVE SOILS (AS APPROVED BY ENGINEER)	95%

UNIT DRAINAGE FILL GRADATION

SIEVE SIZE	PERCENT PASSING
1"	100
3/4"	75-100
No. 4	0-10
No. 5	0-5

SEGMENTAL RETAINING WALLS

GENERAL:

1. ALL MATERIALS AND WORK SHALL BE IN ACCORDANCE WITH WSDOT 2004 STANDARD SPECIFICATIONS.

SEGMENTAL RETAINING WALLS:

1. CONCRETE BLOCK AND GRID ASSEMBLY:
   CONCRETE BLOCK AND GRID ASSEMBLY SHALL BE KEYSTONE RETAINING WALL SYSTEM. SPECIFIED CONCRETE BLOCK AND GEOGRID SHALL NOT BE SUBSTITUTED WITH OTHER BRANDS AND/OR TYPES OF BLOCK AND GEOGRID WITHOUT PRIOR WRITTEN APPROVAL FROM THE ENGINEER.
2. SUB-GRADE:
   SUB-GRADE SHALL BE INSPECTED BY THE ENGINEER PRIOR TO PLACEMENT OF THE BASE PAD.
3. COMPACTION:
   A. REINFORCED FILL SHALL BE COMPACTED AS INDICATED IN CHART ON THIS SHEET.
   B. COMPACTION TESTS SHALL BE TAKEN AT:
      1. BASE PAD
      2. FIRST THREE (3) LIFTS ABOVE THE BASE PAD
      3. EVERY THIRD LIFT THEREAFTER
      PROVIDE ONE (1) TEST MINIMUM FOR EVERY ONE HUNDRED (100) LINEAR FEET OF WALL.
   C. DO NOT USE COMPACTION EQUIPMENT WITHIN 3'-0" OF INTERIOR FACE OF WALL.
4. FILL MATERIALS: (SEE CHART ON THIS SHEET).
   A. USE 3/4" MINUS CLEAN, ANGULAR CRUSHED ROCK WITH MINIMUM FINES, IN CORES OF BLOCK.
   B. SWEEP TOPS OF BLOCKS PRIOR TO PLACEMENT OF COURSE ABOVE. ALL SOIL AND ROCK DEBRIS SHALL BE REMOVED
   C. FROM THE INTERFACE BETWEEN BLOCK-TO-BLOCK AND BLOCK-TO-GEOGRID.
   D. BACK FILL SHALL BE PLACED IN A MAXIMUM OF 8" LOOSE LIFTS.
5. STEPS IN WALL ELEVATION:
   USE 8" VERTICAL AND MIN 18" HORIZONTAL STEPS.
6. GEOGRID:
   A. SPECIFIED LENGTH OF GEOGRID SHALL NOT BE REDUCED OR CUT WITHOUT PRIOR WRITTEN APPROVAL FROM THE ENGINEER.
   B. GEOGRID SHALL EXTEND TO EXTERIOR FACE OF CONCRETE BLOCK.
   C. GEOGRID LAYERS SHALL BE PLACED HORIZONTALLY.
   D. PLACEMENT OF BACK FILL SHALL BEGIN FROM BACK FACE OF WALL AND SHALL EXTEND TOWARDS INTERIOR END OF GEOGRID.
   E. BACK FILL SHALL BE COMPACTED PRIOR TO PLACEMENT OF EACH GEOGRID.
   F. DO NOT RUN EQUIPMENT DIRECTLY OVER GEOGRID.
   G. DO NOT OVERLAP GEOGRID. PROVIDE 3" MINIMUM SOIL BETWEEN LAYERS OF GEOGRID.
7. ALL BLOCKS TO BE STRAIGHT FACED WITH A "KHAKI" COLOR.

DESIGNED	CC
DRAWN	GM
CRP	311522
HOR.	NOTED
VERT.	NOTED
DATE	3/05/04
DWG:	W03
SHEET 21	OF 55

CALL 48 HOURS BEFORE YOU DIG
1-800-553-4344
"It's the Law"
NORTHWEST UTILITIES NOTIFICATION CENTER

STATE OF WASHINGTON
JOSEPH T. SARGENT
P.E.
WASHINGTON
EXPIRES OCT. 22, 2004

DESIGN & ENGINEERING DIVISION
DESIGN SECTION

NE 10TH AVENUE
SEGMENTAL RETAINING WALL DETAILS

proud past, promising future
CLARK COUNTY
WASHINGTON

Plotted on Mar 08, 2004 - 8:52am, Modified 03-05-04
Xrefs: TBLK WA-DOUG

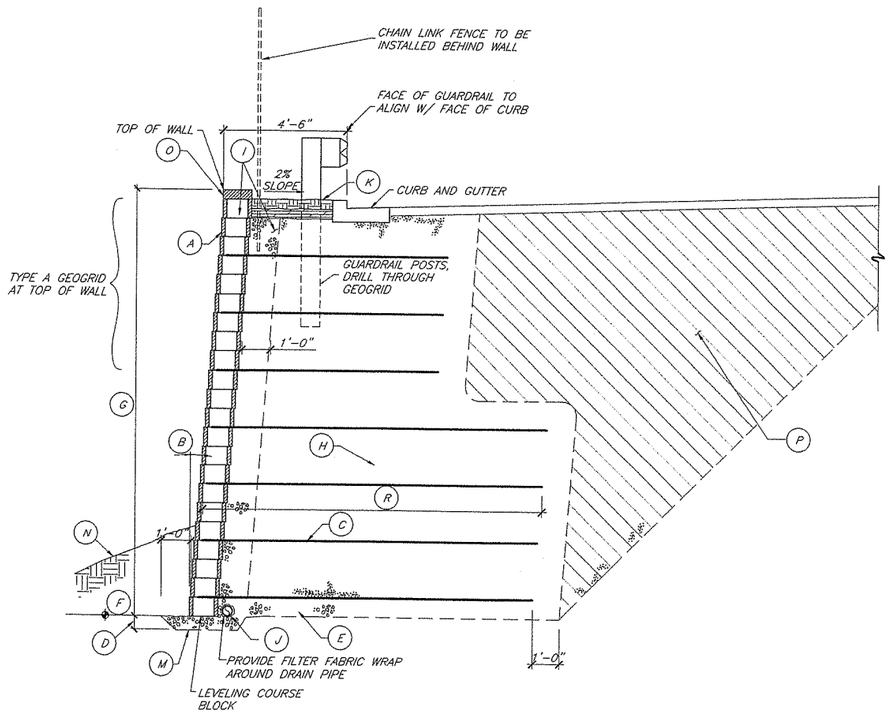

A / W04 WALL SECTION – EXCAVATION & FILL CRITERIA

NTS

WALL SECTION NOTES

(A) KEYSTONE 8" HIGH STD UNITS.

(B) 4.4 DEGREE WALL BATTER.

(C) GEOGRID. SEE WALL ELEVATION AND GEOGRID SCHEDULE FOR TYPE, LENGTH, ELEVATION.

(D) 6" MINIMUM OF GRAVEL (WALL BACKFILL MATERIAL) UNDER 1ST BLOCK COURSE.

(E) EXCAVATE DOWN TO UNDISTURBED NATIVE SOIL OR OVER-EXCAVATE AND PROVIDE 6" MIN. COMPACTED GRANULAR FILL.

(F) BOTTOM OF WALL ELEVATION. VERIFY DEPTH BELOW FINISHED GRADE PER WALL ELEVATIONS.

(G) WALL HEIGHT SHOWN ON WALL ELEVATION.

(H) REINFORCED FILL: SEE NOTES ON SHEET W03.

(I) UNIT DRAINAGE FILL.

(J) 4" ø PERFORATED DRAIN PIPE. DRAIN TO TOE OF SLOPING GROUND. PROVIDE OUTLETS THROUGH WALL @ 80' INTERVALS, SEE NOTE BELOW.

(K) 4" OF LOW PERMEABILITY CLAY, OVER REINFORCED FILL.

(M) SUB GRADE SHALL BE INSPECTED BY THE ENGINEER PRIOR TO PLACEMENT OF CRUSHED ROCK BASE PAD.

(N) FINAL GRADE TO MATCH EXISTING GRADE.

(O) GLUE CAP UNITS PER BLOCK MANUFACTURER'S RECOMMENDATIONS.

(P) RETAINED FILL, SEE NOTE ON W03

(R) GEOGRID LENGTH, SEE GEOGRID SCHEDULE ON W01 AND W02.

NOTE: OUTLETS FOR DRAIN ARE TO BE FIELD LOCATED BY ENGINEER. CUT FACE BLOCK OR USE HALF BLOCK WHERE DRAIN PIPE PENETRATES THROUGH WALL.

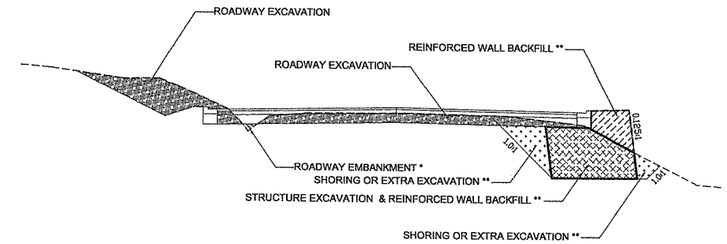

* THERE IS NO MEASURE OR PAY FOR ROADWAY EMBANKMENT. PAY IS INCLUDED IN ROADWAY EXCAVATION.
** THERE IS NO MEASURE OR PAY FOR SHORING OR EXTRA EXCAVATION, STRUCTURE EXCAVATION OR REINFORCED IT IS INCLUDED WITH MEASURE AND PAY FOR WALL PER SQUARE FOOT.
*** THERE IS NO MEASURE OR PAY FOR HILLSIDE TERRACING.

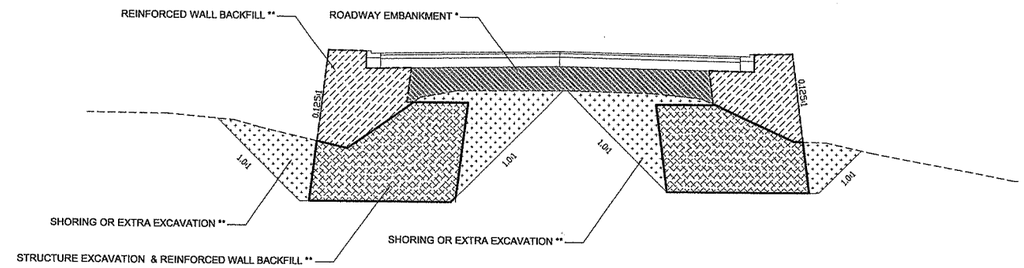

* THERE IS NO MEASURE OR PAY FOR ROADWAY EMBANKMENT. PAY IS INCLUDED IN ROADWAY EXCAVATION.
** THERE IS NO MEASURE OR PAY FOR SHORING OR EXTRA EXCAVATION, STRUCTURE EXCAVATION OR REINFORCED WALL BACKFILL. IT IS INCLUDED WITH MEASURE AND PAY FOR WALL PER SQUARE FOOT.
*** THERE IS NO MEASURE OR PAY FOR HILLSIDE TERRACING.

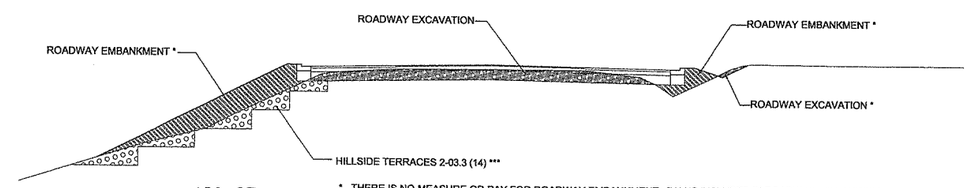

130+25

* THERE IS NO MEASURE OR PAY FOR ROADWAY EMBANKMENT. PAY IS INCLUDED IN ROADWAY EXCAVATION.
** THERE IS NO MEASURE OR PAY FOR SHORING OR EXTRA EXCAVATION, STRUCTURE EXCAVATION OR REINFORCED WALL BACKFILL. IT IS INCLUDED WITH MEASURE AND PAY FOR WALL PER SQUARE FOOT.
*** THERE IS NO MEASURE OR PAY FOR HILLSIDE TERRACING.

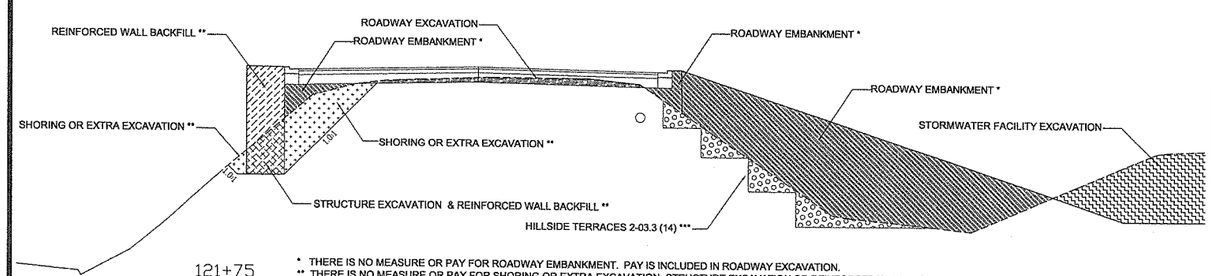

121+75

* THERE IS NO MEASURE OR PAY FOR ROADWAY EMBANKMENT. PAY IS INCLUDED IN ROADWAY EXCAVATION.
** THERE IS NO MEASURE OR PAY FOR SHORING OR EXTRA EXCAVATION, STRUCTURE EXCAVATION OR REINFORCED WALL BACKFILL. IT IS INCLUDED WITH MEASURE AND PAY FOR WALL PER SQUARE FOOT.
*** THERE IS NO MEASURE OR PAY FOR HILLSIDE TERRACING.

MEASUREMENT & PAYMENT CRITERIA

DESIGNED	CC
DRAWN	GM
CRP	311522
HOR.	NOTED
VERT.	NOTED
DATE	3/05/04
DWG.	W04
SHEET 22	OF 55

CALL 48 HOURS BEFORE YOU DIG 1-800-553-4344 "It's the Law" NORTHWEST UTILITIES NOTIFICATION CENTER

DRAWN BY: L. SARKKINEN, P.E. WASHINGTON REGISTERED PROFESSIONAL ENGINEER 34138 STATE OF WASHINGTON
DATE: OCT. 22, 2004

DESIGN & ENGINEERING DIVISION
DESIGN SECTION

NE 10TH AVENUE
SEGMENTAL RETAINING WALL SECTIONS

proud past, promising future
CLARK COUNTY WASHINGTON

Plotted on Mar 08, 2004 – 10:12am, Modified 03-05-04
Xrefs: TBLK WA-DOUG EXCAVATION PAY

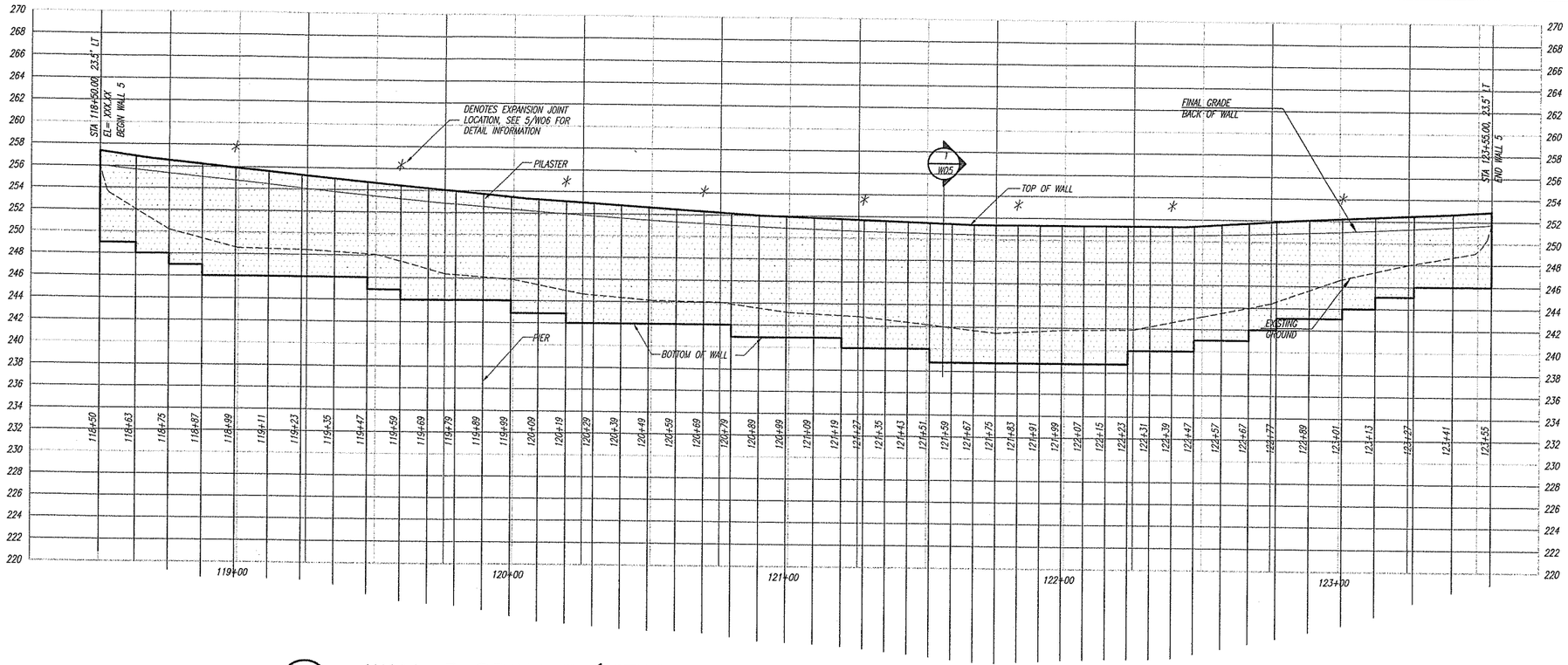

A W05 WALL 5 PROFILE (VIEWED FROM ROADWAY SIDE)

VERT. 1'=3'-0" HORIZ. 1'=12'-0"

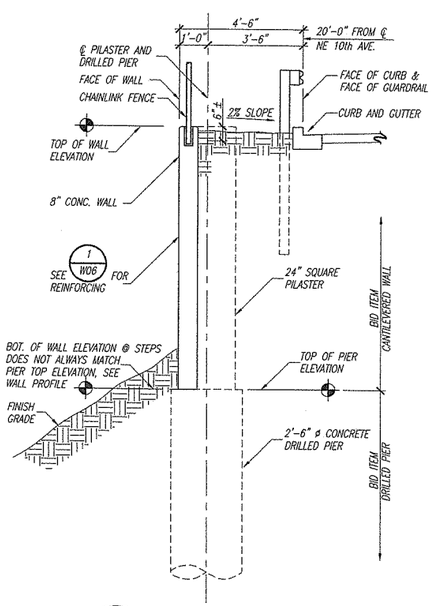

1 W05 SECTION

3/8"=1'-0"

* INDICATES INTIAL BATTER TO BE CONSTRUCTED IN WALL

DRILLED PIER/PILASTER SCHEDULE

STATION	TOP OF PILASTER/WALL	TOP OF DRILLED PIER ELEVATION	BOTTOM OF DRILLED PIER TIP ELEVATION	VERTICAL PILASTER (D) REINFORCEMENT	VERTICAL PIER (E) REINFORCEMENT	BATTER AT TOP OF WALL* (INCHES)
118 + 50	256.50	249.00	224	(5) #6	(7) #6	0.5
118 + 63	256.00	248.00	222	(5) #7	(7) #7	0.5
118 + 75	255.75	247.00	220	(5) #7	(7) #7	0.75
118 + 87	255.50	246.00	219	(5) #7	(7) #7	0.75
118 + 99	255.25	246.00	218	(5) #7	(7) #7	0.75
119 + 11	254.75	246.00	218	(5) #7	(7) #7	0.75
119 + 23	254.50	246.00	218	(5) #7	(7) #7	0.75
119 + 35	254.25	246.00	218	(5) #7	(7) #7	0.75
119 + 47	254.00	245.00	218	(5) #7	(7) #7	0.75
119 + 59	253.75	244.00	217	(5) #8	(7) #7	0.75
119 + 69	253.50	244.00	217	(5) #8	(7) #7	1.0
119 + 79	253.25	244.00	216	(5) #8	(7) #7	1.0
119 + 89	253.00	244.00	216	(5) #8	(7) #7	1.0
119 + 99	252.75	243.00	216	(5) #8	(7) #7	1.0
120 + 09	252.75	243.00	215	(5) #8	(7) #7	1.0
120 + 19	252.50	242.00	215	(5) #8	(7) #7	1.0
120 + 29	252.25	242.00	214	(5) #8	(7) #7	1.0
120 + 39	252.25	242.00	214	(5) #8	(7) #7	1.0
120 + 49	252.00	242.00	214	(5) #8	(7) #7	1.0
120 + 59	251.75	242.00	214	(5) #8	(7) #7	1.0
120 + 69	251.75	242.00	214	(5) #8	(7) #7	1.0
120 + 79	251.50	241.00	214	(5) #8	(7) #7	1.0
120 + 89	251.50	241.00	213	(5) #8	(7) #7	1.0
120 + 99	251.50	241.00	213	(5) #8	(7) #7	1.0
121 + 09	251.25	241.00	213	(5) #8	(7) #7	1.0
121 + 19	251.25	240.00	213	(5) #8	(7) #8	1.25
121 + 27	251.25	240.00	212	(5) #8	(7) #8	1.25
121 + 35	251.25	240.00	212	(5) #8	(7) #8	1.25
121 + 43	251.00	240.00	212	(5) #8	(7) #8	1.25
121 + 51	251.00	239.00	212	(5) #8	(7) #8	1.25
121 + 59	251.00	239.00	212	(5) #8	(7) #8	1.25
121 + 67	251.00	239.00	213	(5) #8	(7) #8	1.25
121 + 75	251.00	239.00	213	(5) #8	(7) #8	1.25
121 + 83	251.00	239.00	213	(5) #8	(7) #8	1.25
121 + 91	251.00	239.00	213	(5) #8	(7) #8	1.25
121 + 99	251.00	239.00	213	(5) #8	(7) #8	1.25
122 + 07	251.00	239.00	212	(5) #8	(7) #8	1.25
122 + 15	251.00	239.00	212	(5) #8	(7) #8	1.25
122 + 23	251.00	239.00	212	(5) #8	(7) #8	1.25
122 + 31	251.00	240.00	212	(5) #8	(7) #8	1.25
122 + 39	251.00	240.00	212	(5) #8	(7) #8	1.25
122 + 47	251.25	240.00	213	(5) #8	(7) #7	1.0
122 + 57	251.25	241.00	213	(5) #8	(7) #7	1.0
122 + 67	251.25	241.00	214	(5) #8	(7) #7	1.0
122 + 77	251.25	242.00	214	(5) #8	(7) #7	1.0
122 + 89	251.50	243.00	215	(5) #7	(7) #7	1.0
123 + 01	251.50	243.00	217	(5) #7	(7) #7	0.75
123 + 13	251.75	244.00	217	(5) #7	(7) #7	0.75
123 + 27	251.75	245.00	218	(5) #6	(7) #6	0.5
123 + 41	252.00	246.00	219	(5) #6	(7) #6	0.5
123 + 55	252.25	246.00	219	(5) #6	(7) #6	0.5

GENERAL NOTES FOR CANTILEVERED PILE WALL

1. ALL MATERIAL AND WORK SHALL BE IN ACCORDANCE WITH THE WSDOT STANDARD SPECIFICATIONS FOR ROAD, BRIDGE, AND MUNICIPAL CONSTRUCTION, 2002 EDITION.
2. WALLS WERE DESIGNED IN ACCORDANCE WITH THE STANDARD SPECIFICATIONS FOR HIGHWAY BRIDGES, 15th EDITION, USING LOAD FACTOR DESIGN.
3. CONCRETE FOR DRILLED PIERS, WALLS, AND PILASTERS TO BE CLASS 4000.
4. STEEL REINFORCING BAR TO BE AASHTO M31.
5. CONTRACTOR TO PROVIDE REINFORCING STEEL SHOP DRAWINGS FOR REVIEW BY THE ENGINEER PRIOR TO FABRICATION.
6. PILASTERS AND WALLS ARE TO BE CAST OUT OF PLUMB, WITH A BATTER LEANING TOWARDS THE ROAD. AMOUNTS ARE INDICATED ON THE PILASTER SCHEDULE.

Plotted on Mar 08, 2004 – 8:54am, Modified 03-05-04
Xrefs: TBLK 10THW01-3 WA-DOUG

DESIGNED CC
DRAWN GM
CRP 311522
HOR. NOTED
VERT. NOTED
DATE 3/05/04
DWG: W05
SHEET 23 OF 55

CALL 48 HOURS BEFORE YOU DIG 1-800-553-4344 "It's the Law" NORTHWEST UTILITIES NOTIFICATION CENTER

DAVID L. SARKANEN STATE OF WASHINGTON 34196 REGISTERED PROFESSIONAL ENGINEER
EXPIRES OCT. 22, 2004

DESIGN & ENGINEERING DIVISION
DESIGN SECTION

NE 10TH AVENUE
CANTILEVERED PILE RETAINING WALL PROFILE

proud past, promising future
CLARK COUNTY WASHINGTON

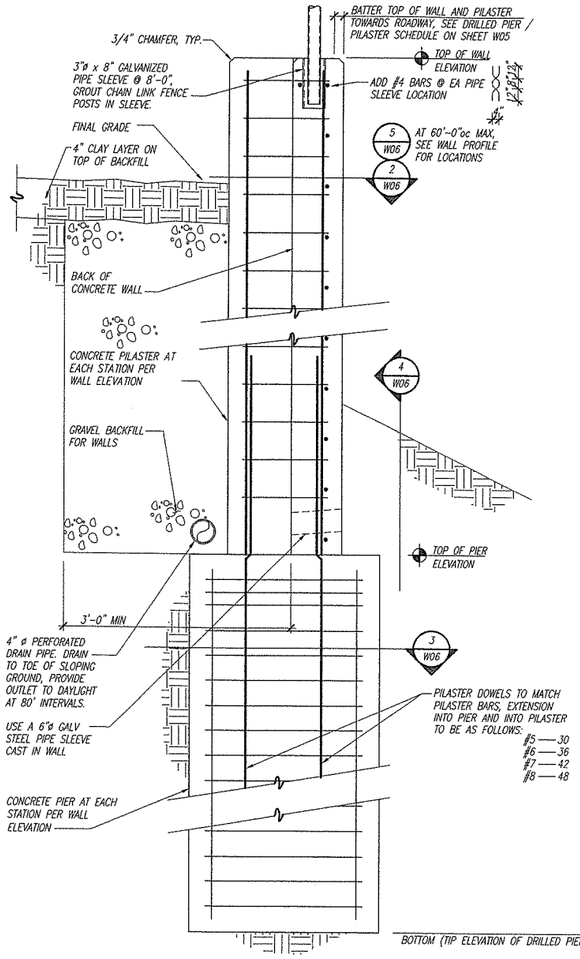

1 W06 SECTION
1"=1'-0"

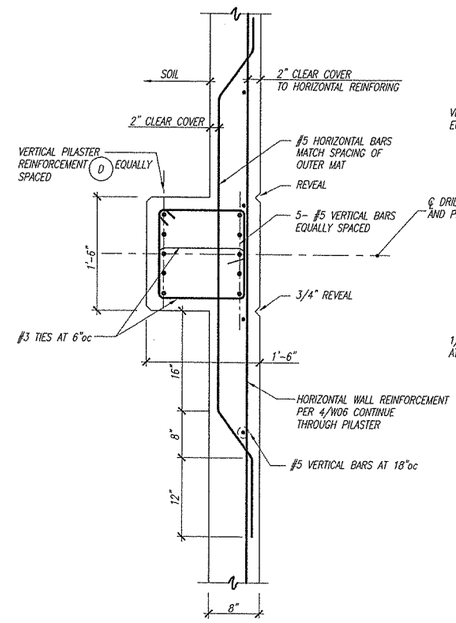

REFER TO PIER SCHEDULE FOR ADDITIONAL INFORMATION

2 W06 PILASTER SECTION
1"=1'-0"

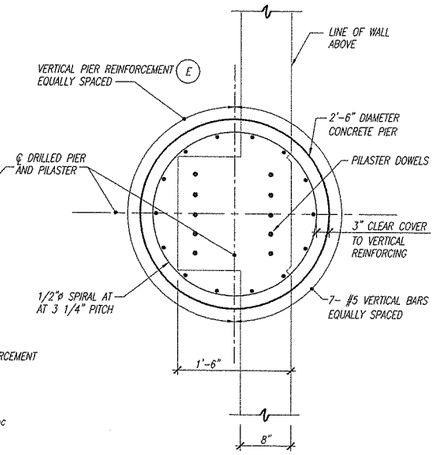

NOTE: THE BOTTOM 16'-0" OF THE DRILLED PIER REQUIRES ONLY 14-#5 VERTICAL BARS, EQUALLY SPACED. LAP SPLICE 30" MINIMUM.

REFER TO PIER SCHEDULE FOR ADDITIONAL INFORMATION

3 W06 DRILLED PIER SECTION
1"=1'-0"

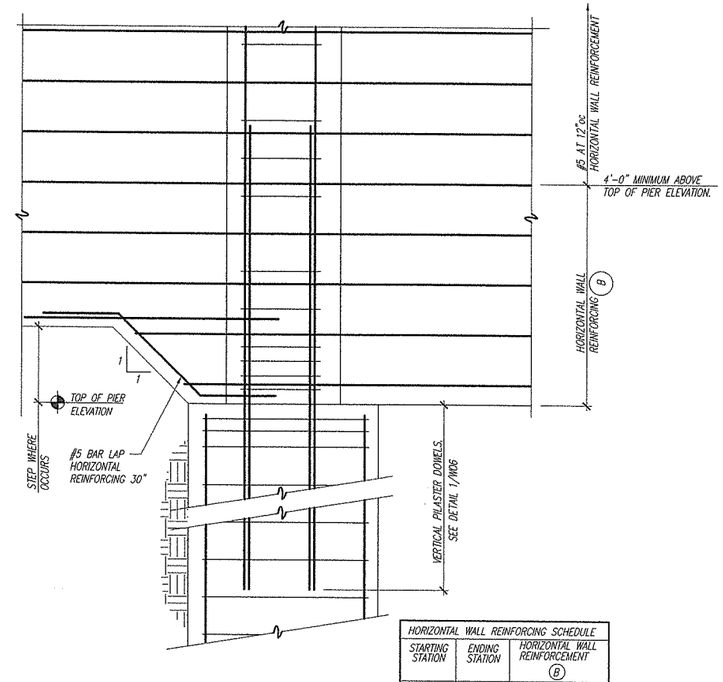

HORIZONTAL WALL REINFORCING SCHEDULE		
STARTING STATION	ENDING STATION	HORIZONTAL WALL REINFORCEMENT (B)
118+50	118+63	#5 @ 6
118+63	119+59	#5 @ 6
119+59	121+19	#5 @ 8
121+19	122+39	#5 @ 12
122+39	122+77	#5 @ 8
122+77	123+13	#5 @ 6
123+13	124+25	#5 @ 6

4 W06 SECTION
1"=1'-0"

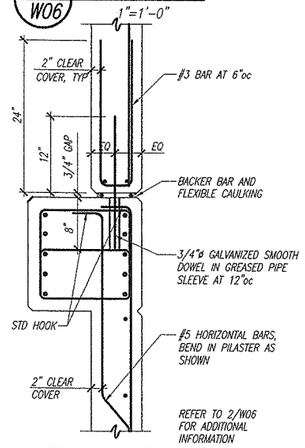

5 W06 SECTION @ EXPANSION JOINT
1"=1'-0"

DESIGNED CC
DRAWN GM
CRP 311522
HOR. NOTED
VERT. NOTED
DATE 3/05/04
DWG: W06
SHEET 24 OF 55

CALL 48 HOURS BEFORE YOU DIG
1-800-553-4344
"It's the Law"
NORTHWEST UTILITIES NOTIFICATION CENTER

STATE OF WASHINGTON
GARY L. NEALY
24108
REGISTERED PROFESSIONAL ENGINEER
DRWGS OCT. 22, 2004

DESIGN & ENGINEERING DIVISION
DESIGN SECTION

NE 10TH AVENUE
CANTILEVERED PILE RETAINING WALL DETAILS

proud past, promising future
CLARK COUNTY
WASHINGTON

Plotted on Mar 08, 2004 - 9:05am, Modified 03-05-04
Xrefs: TBLK WA-DOUG

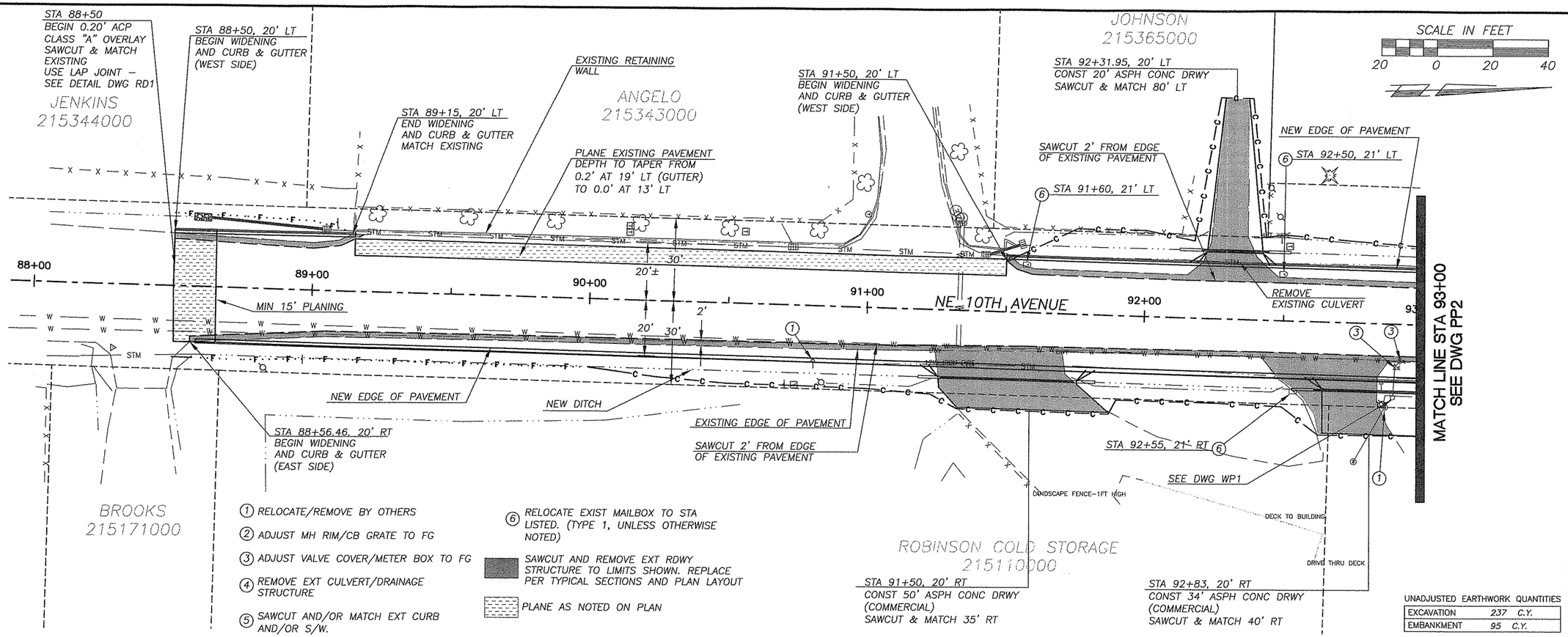

UNADJUSTED EARTHWORK QUANTITIES

EXCAVATION	237	C.Y.
EMBANKMENT	95	C.Y.

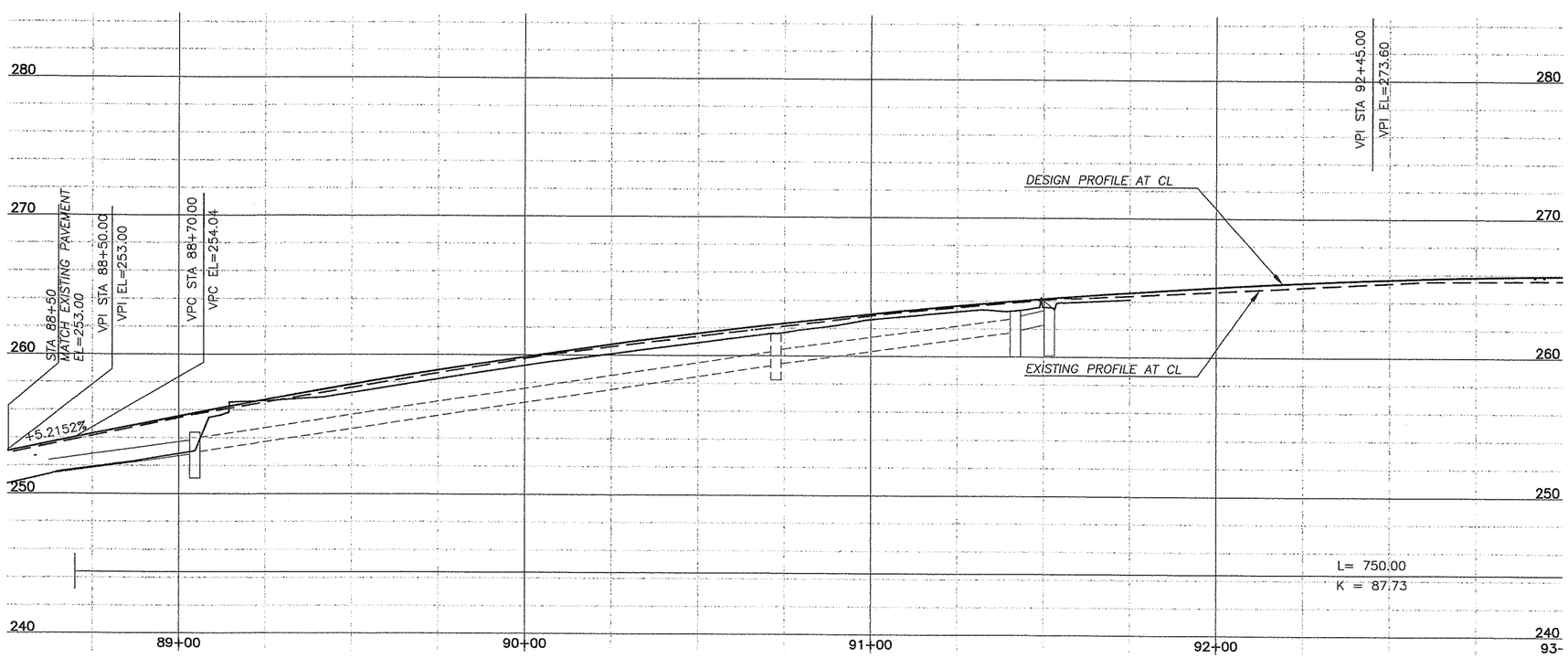

DESIGNED	TG
DRAWN	RK
CRP	311522
HOR.	1"=20'
VERT.	1"=5'
DATE	3/05/04
DWG:	PP1
SHEET 25	OF 55

CALL 48 HOURS BEFORE YOU DIG 1-800-553-4344 "It's the Law" NORTHWEST UTILITIES NOTIFICATION CENTER

THOMAS D. GRANGE STATE OF WASHINGTON 37058 REGISTERED PROFESSIONAL ENGINEER 3/11/04 EXPIRES JANUARY 20, 2005

DESIGN & ENGINEERING DIVISION
DESIGN SECTION

NE 10TH AVENUE
PLAN & PROFILE STA BOP TO 93+00

proud past, promising future
CLARK COUNTY WASHINGTON

SCALE IN FEET

20 0 20 40

FARIA
215439015

NEW DITCH

NEW EDGE OF PAVEMENT

EDGE OF EXISTING PAVEMENT

SAWCUT 2' FROM EDGE OF EXISTING PAVEMENT

MATCH LINE STA 93+00
SEE DWG PP1

94+00 95+00 96+00 97+00 98

NE 10TH AVENUE

50' 20' 20' 30' 2' 2'

12IN CON

ROBINSON COLD STORAGE

10FT W X 7FT H

NEW EDGE OF PAVEMENT

PROTECT EXISTING GATE

SAWCUT 2' IN FROM EDGE OF EXISTING PAVEMENT

EXISTING EDGE OF PAVEMENT

NEW DITCH

MATCH LINE STA 98+00
SEE DWG PP3

ROBINSON COLD STORAGE
215128000

ROBINSON COLD STORAGE
215110000

STA 94+77.21, 20' RT
CONST 34' ASPH CONC DRWY
(COMMERCIAL)
SAWCUT & MATCH 40' RT

1. RELOCATE/REMOVE BY OTHERS
2. ADJUST MH RIM/CB GRATE TO FG
3. ADJUST VALVE COVER/METER BOX TO FG
4. REMOVE EXT CULVERT/DRAINAGE STRUCTURE
5. SAWCUT AND/OR MATCH EXT CURB AND/OR S/W.
6. RELOCATE EXIST MAILBOX TO STA LISTED. (TYPE 1, UNLESS OTHERWISE NOTED)

SAWCUT AND REMOVE EXT RDWY STRUCTURE TO LIMITS SHOWN. REPLACE PER TYPICAL SECTIONS AND PLAN LAYOUT

UNADJUSTED EARTHWORK QUANTITIES

EXCAVATION	253	C.Y.
EMBANKMENT	314	C.Y.

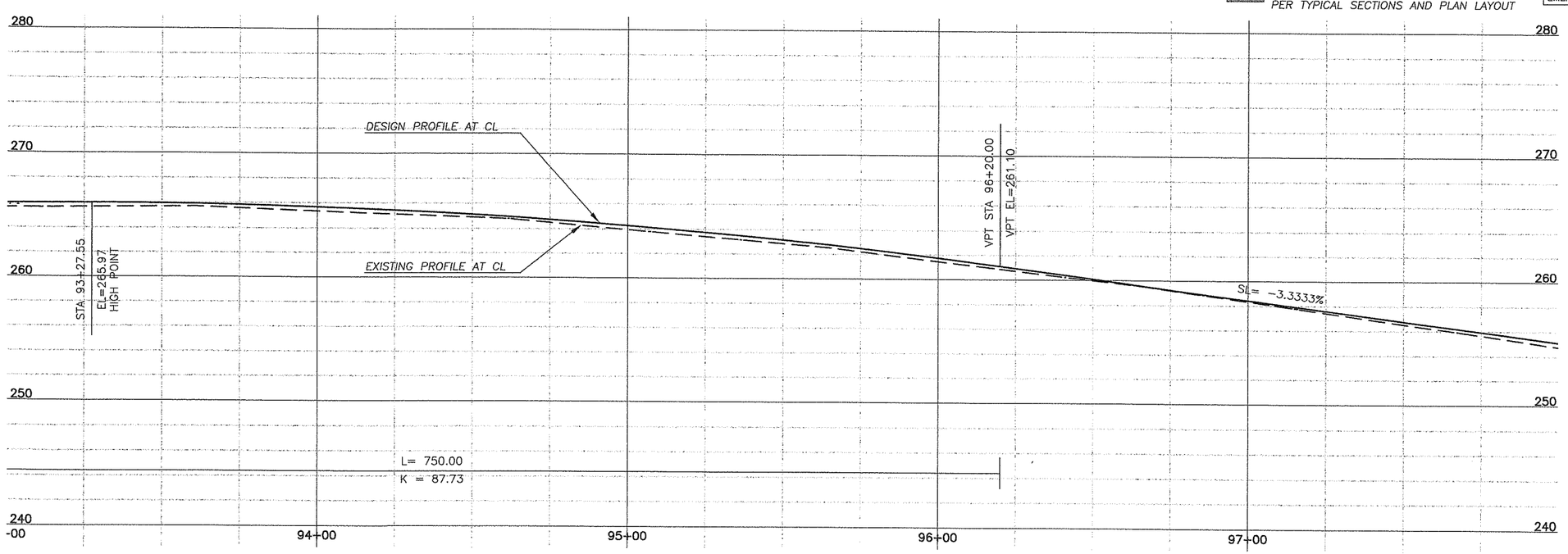

DESIGNED TG
DRAWN RK
CRP 311522
HOR. 1"=20'
VERT. 1"=5'
DATE 3/05/04
DWG: PP2
SHEET 26 OF 55

CALL 48 HOURS BEFORE YOU DIG
1-800-553-4344
"It's the Law"
NORTHWEST UTILITIES NOTIFICATION CENTER

THOMAS D. GRANGE
STATE OF WASHINGTON
PROFESSIONAL ENGINEER
EXPIRES JANUARY 20, 2005

DESIGN & ENGINEERING DIVISION
DESIGN SECTION

NE 10TH AVENUE
PLAN & PROFILE STA 93+00 TO 98+00

proud past, promising future
CLARK COUNTY
WASHINGTON

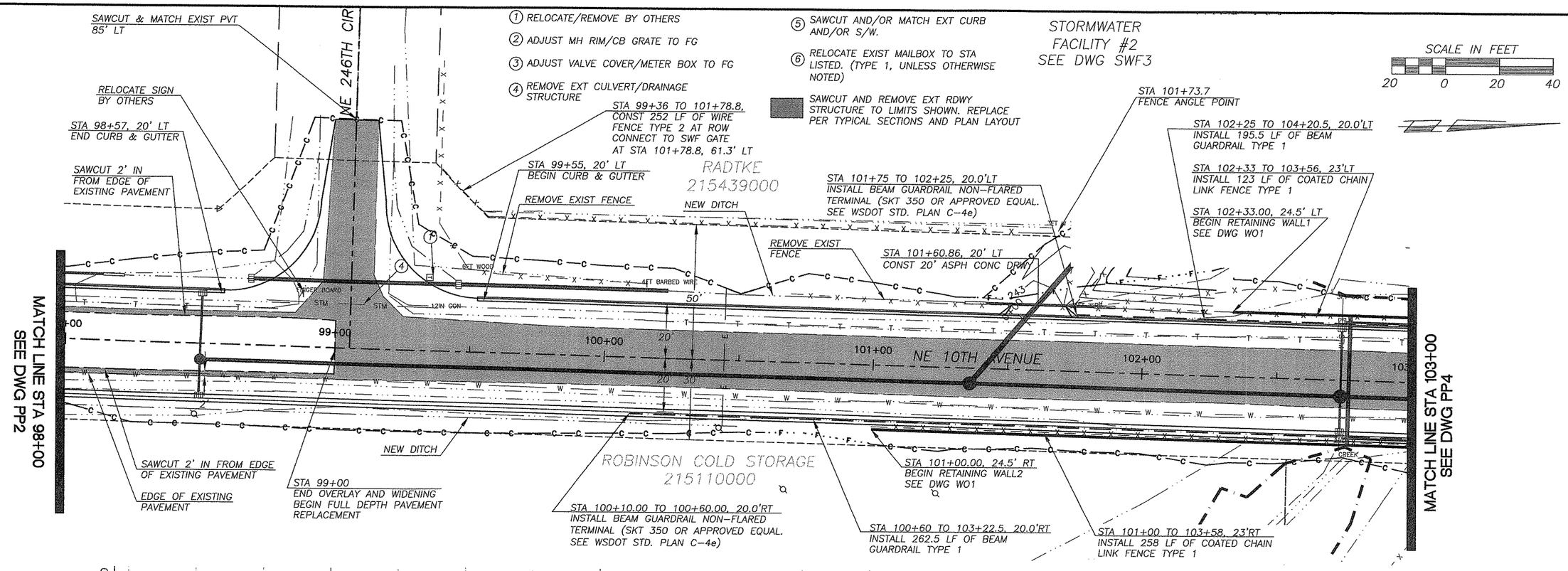

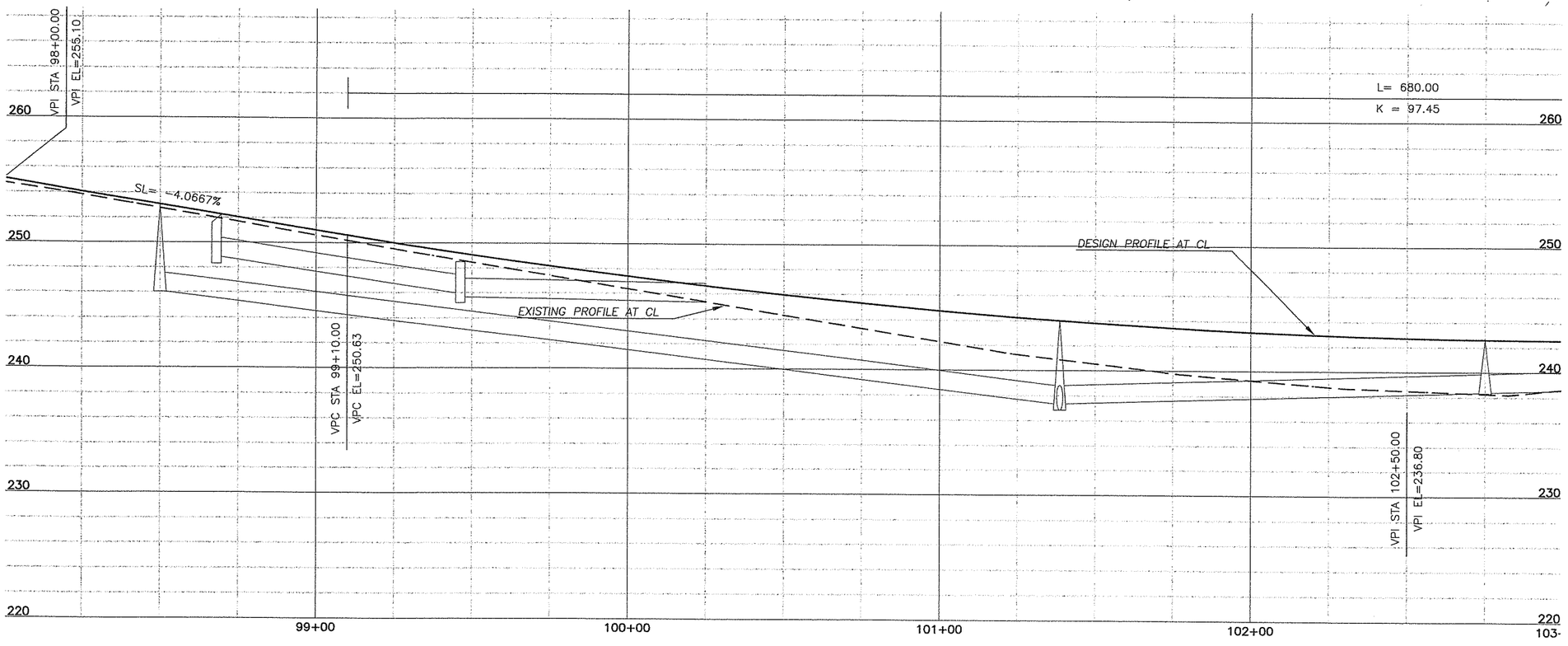

UNADJUSTED EARTHWORK QUANTITIES

EXCAVATION	471	C.Y.
EMBANKMENT	889	C.Y.

DESIGNED	TG
DRAWN	RK
CRP	311522
HOR.	1"=20'
VERT.	1"=5'
DATE	3/05/04
DWG:	PP3
SHEET 27	OF 55

CALL 48 HOURS BEFORE YOU DIG 1-800-553-4344 "It's the Law" NORTHWEST UTILITIES NOTIFICATION CENTER

LENARD D. GRANGE STATE OF WASHINGTON 19344 REGISTERED PROFESSIONAL ENGINEER 3/11/04 EXPIRES: JANUARY 20, 2005

DESIGN & ENGINEERING DIVISION
DESIGN SECTION

NE 10TH AVENUE
PLAN & PROFILE STA 98+00 TO 103+00

proud past, promising future
CLARK COUNTY WASHINGTON

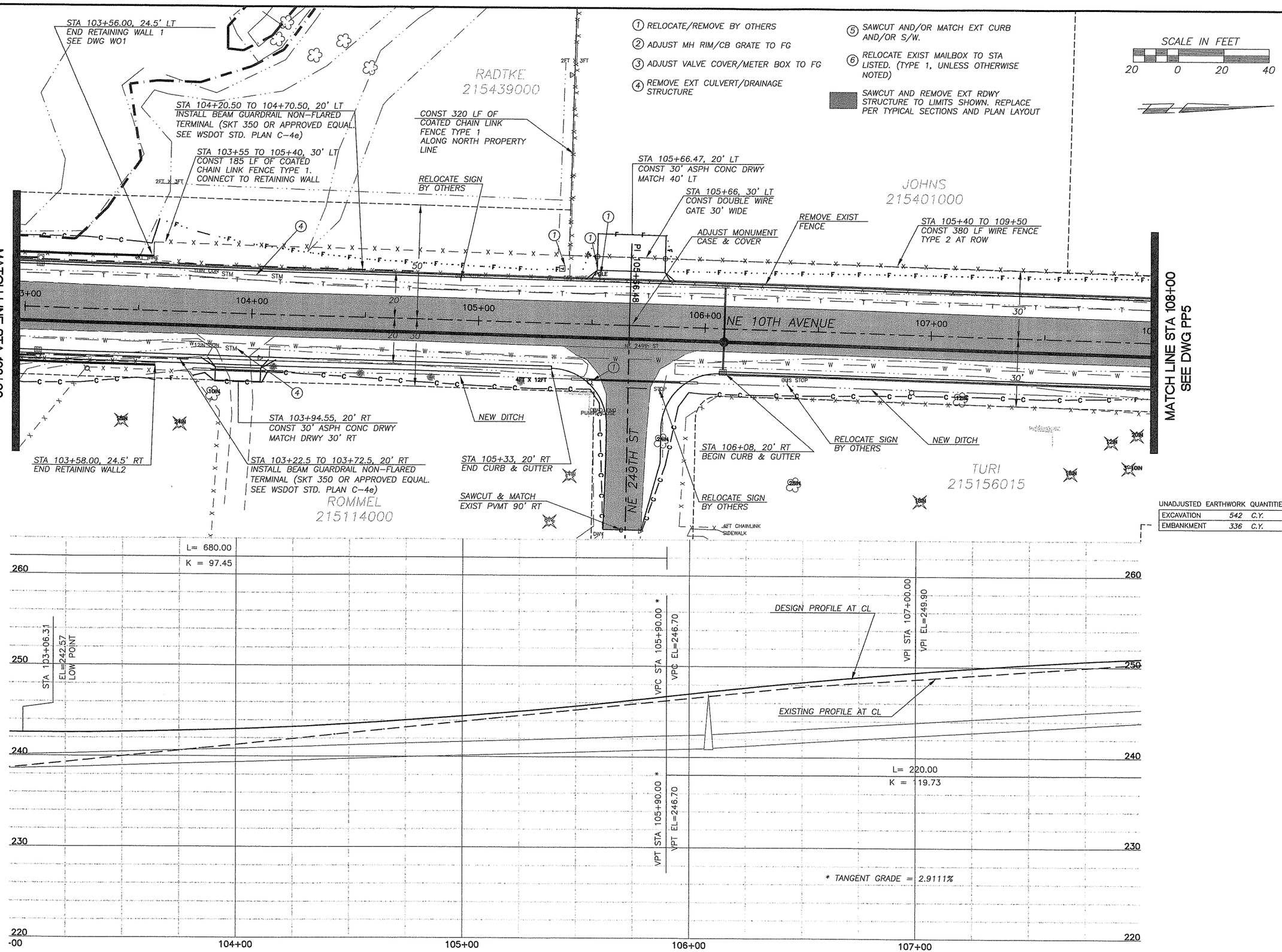

① RELOCATE/REMOVE BY OTHERS

② ADJUST MH RIM/CB GRATE TO FG

③ ADJUST VALVE COVER/METER BOX TO FG

④ REMOVE EXT CULVERT/DRAINAGE STRUCTURE

⑤ SAWCUT AND/OR MATCH EXT CURB AND/OR S/W.

⑥ RELOCATE EXIST MAILBOX TO STA LISTED. (TYPE 1, UNLESS OTHERWISE NOTED)

SAWCUT AND REMOVE EXT RDWY STRUCTURE TO LIMITS SHOWN. REPLACE PER TYPICAL SECTIONS AND PLAN LAYOUT

SCALE IN FEET

20 0 20 40

UNADJUSTED EARTHWORK QUANTITIES

EXCAVATION	542	C.Y.
EMBANKMENT	336	C.Y.

DESIGNED	TG
DRAWN	RK
CRP	311522
HOR.	1"=20'
VERT.	1"=5'
DATE	3/05/04
DWG.	PP4
SHEET 28	OF 55

CALL 48 HOURS BEFORE YOU DIG
1-800-553-4344
"It's the Law"
NORTHWEST UTILITIES NOTIFICATION CENTER

LICENSED PROFESSIONAL ENGINEER
STATE OF WASHINGTON
RICHARD S. D. GRANGE
20088
3-11-04
EXPIRES JANUARY 20, 2005

DESIGN & ENGINEERING DIVISION
DESIGN SECTION

NE 10TH AVENUE
PLAN & PROFILE STA 103+00 TO 108+00

proud past, promising future
CLARK COUNTY
WASHINGTON

1. RELOCATE/REMOVE BY OTHERS
2. ADJUST MH RIM/CB GRATE TO FG
3. ADJUST VALVE COVER/METER BOX TO FG
4. REMOVE EXT CULVERT/DRAINAGE STRUCTURE
5. SAWCUT AND/OR MATCH EXT CURB AND/OR S/W.
6. RELOCATE EXIST MAILBOX TO STA LISTED. (TYPE 1, UNLESS OTHERWISE NOTED)

SAWCUT AND REMOVE EXT RDWY STRUCTURE TO LIMITS SHOWN. REPLACE PER TYPICAL SECTIONS AND PLAN LAYOUT

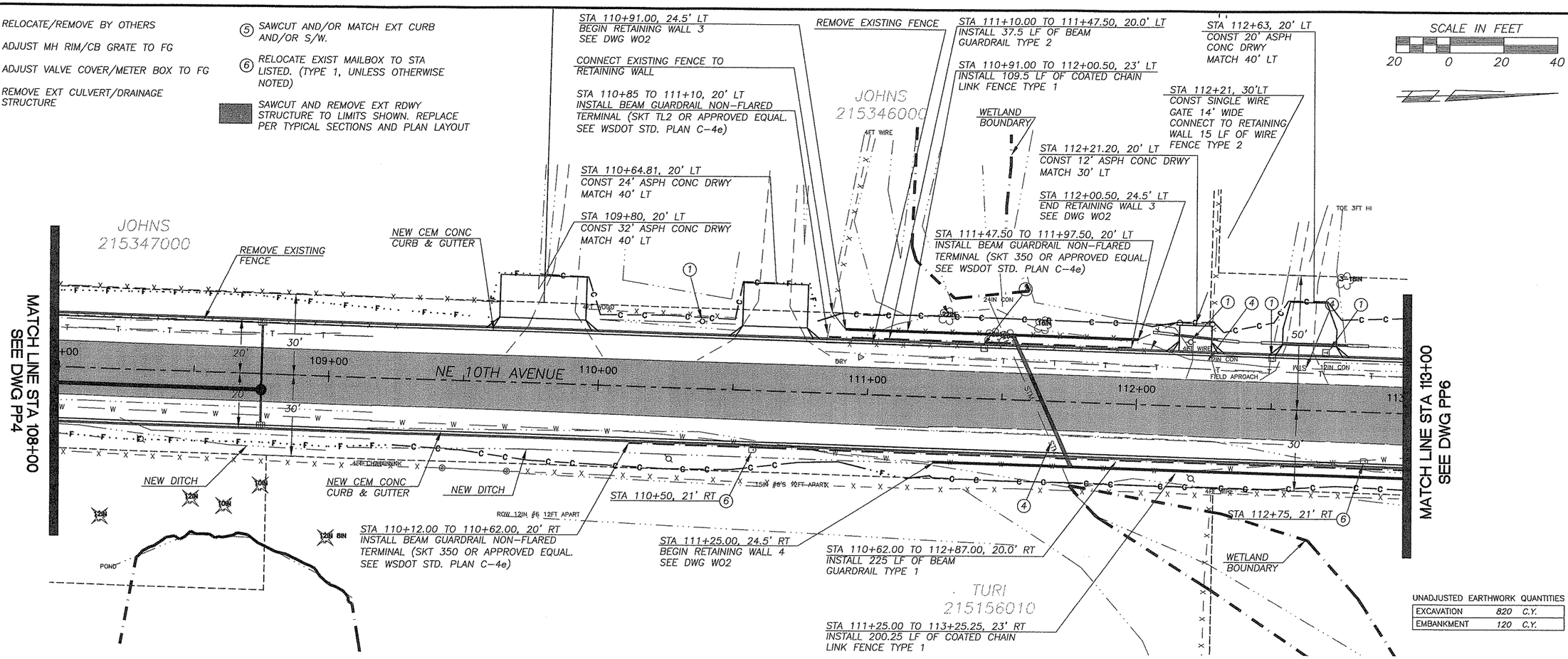

UNADJUSTED EARTHWORK QUANTITIES

EXCAVATION	820	C.Y.
EMBANKMENT	120	C.Y.

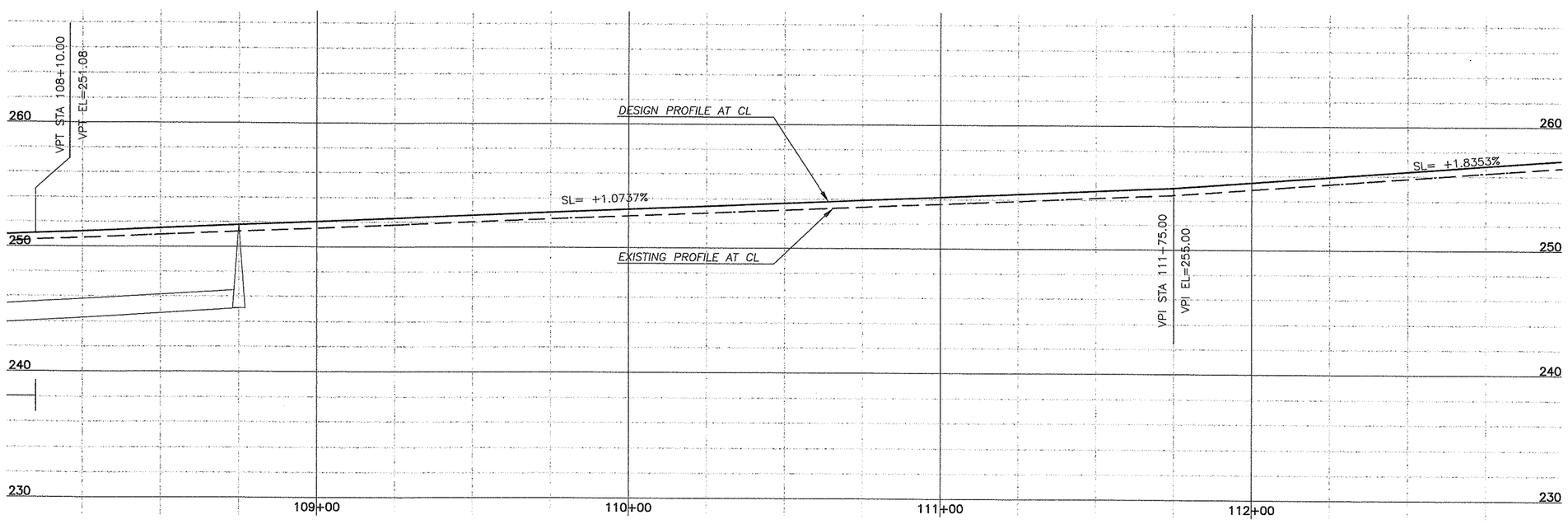

DESIGNED TG
DRAWN RK
CRP 311522
HOR. 1"=20'
VERT. 1"=5'
DATE 3/05/04
DWG: PP5
SHEET 29 OF 55

CALL 48 HOURS BEFORE YOU DIG 1-800-553-4344 "It's the Law"
NORTHWEST UTILITIES NOTIFICATION CENTER

THOMAS D. GRANGE STATE OF WASHINGTON 31104 REGISTERED PROFESSIONAL ENGINEER
EXPIRES JANUARY 20, 2006

DESIGN & ENGINEERING DIVISION
DESIGN SECTION

NE 10TH AVENUE
PLAN & PROFILE STA 108+00 TO 113+00

proud past, promising future
CLARK COUNTY WASHINGTON

1. RELOCATE/REMOVE BY OTHERS
2. ADJUST MH RIM/CB GRATE TO FG
3. ADJUST VALVE COVER/METER BOX TO FG
4. REMOVE EXT CULVERT/DRAINAGE STRUCTURE
5. SAWCUT AND/OR MATCH EXT CURB AND/OR S/W.
6. RELOCATE EXIST MAILBOX TO STA LISTED. (TYPE 1, UNLESS OTHERWISE NOTED)

SAWCUT AND REMOVE EXT RDWY STRUCTURE TO LIMITS SHOWN. REPLACE PER TYPICAL SECTIONS AND PLAN LAYOUT

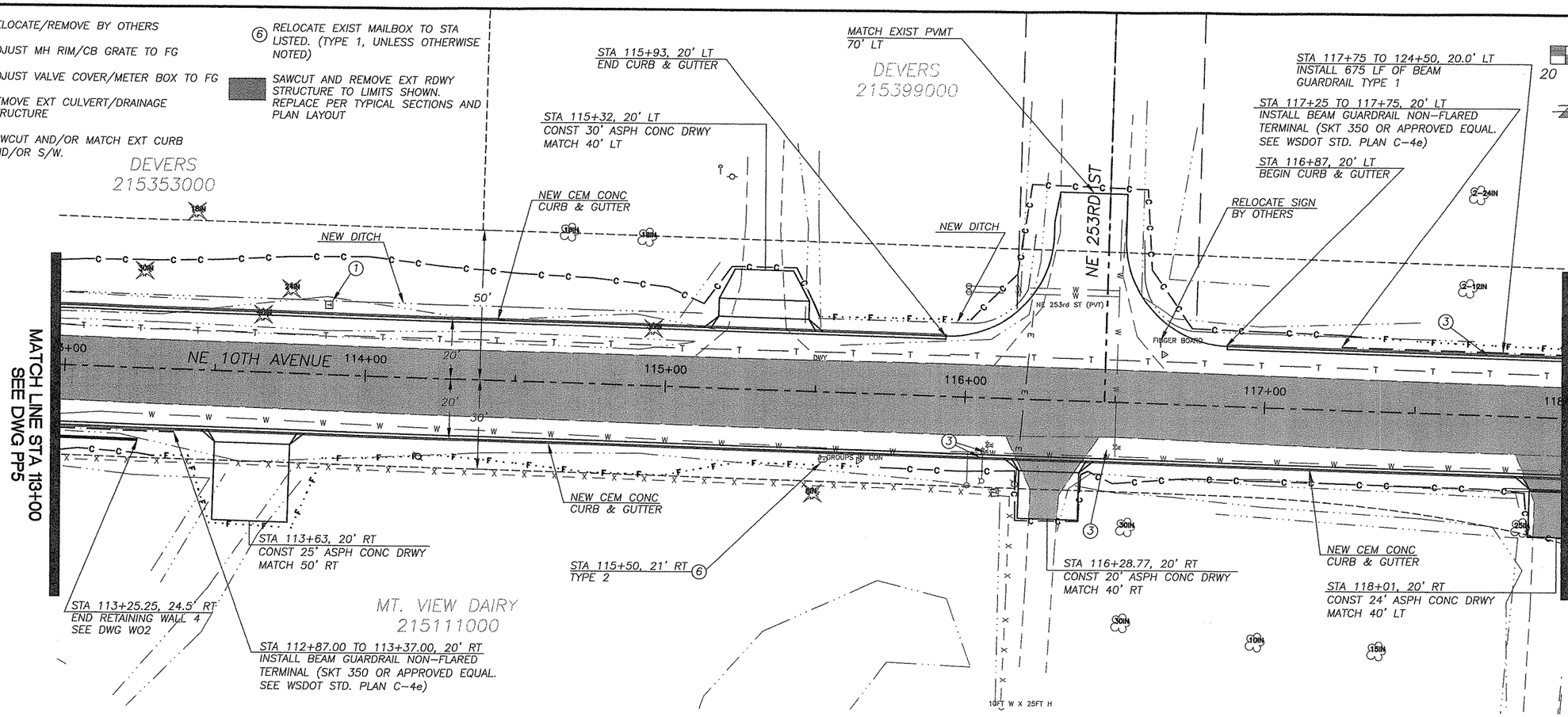

UNADJUSTED EARTHWORK QUANTITIES

EXCAVATION	1306 C.Y.
EMBANKMENT	76 C.Y.

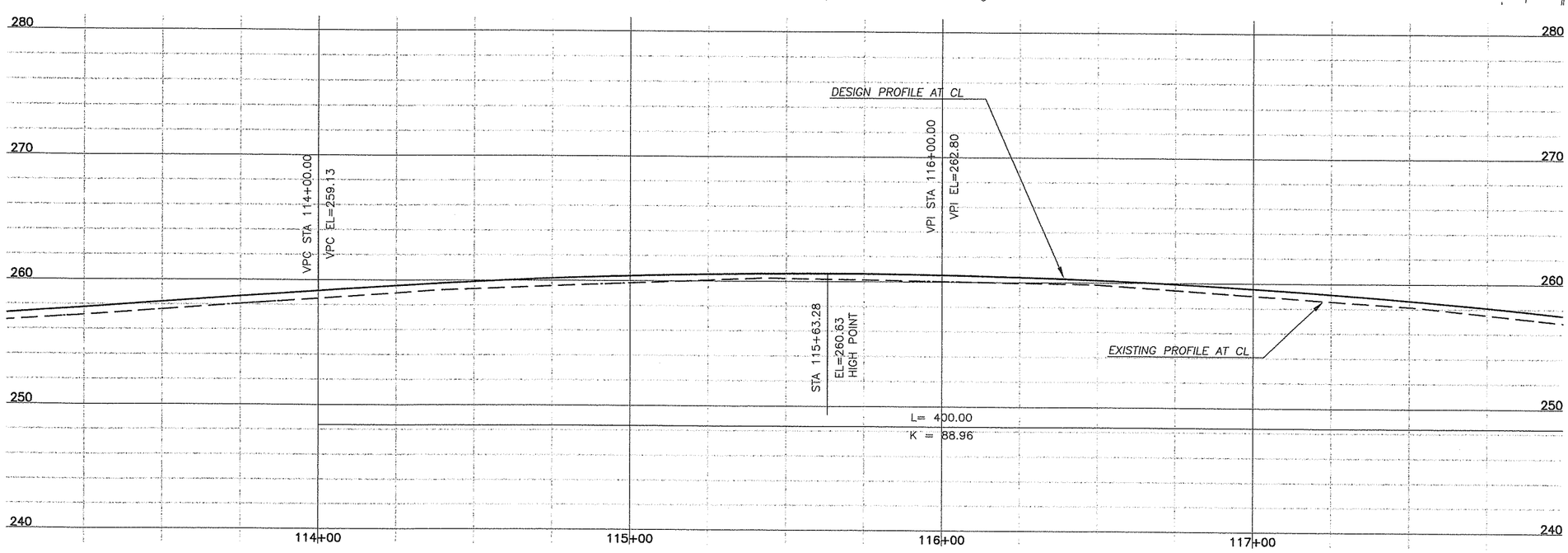

DESIGNED	TG
DRAWN	RK
CRP	311522
HOR.	1"=20'
VERT.	1"=5'
DATE	3/05/04
DWG:	PP6
SHEET 30	OF 55

CALL 48 HOURS BEFORE YOU DIG 1-800-553-4344 "It's the Law" NORTHWEST UTILITIES NOTIFICATION CENTER

STEVEN D. GRANGE STATE OF WASHINGTON 32084 REGISTERED PROFESSIONAL ENGINEER 2/11/04 EXPIRES JANUARY 20, 2005

DESIGN & ENGINEERING DIVISION
DESIGN SECTION

NE 10TH AVENUE
PLAN & PROFILE STA 113+00 TO 118+00

proud past, promising future
CLARK COUNTY WASHINGTON

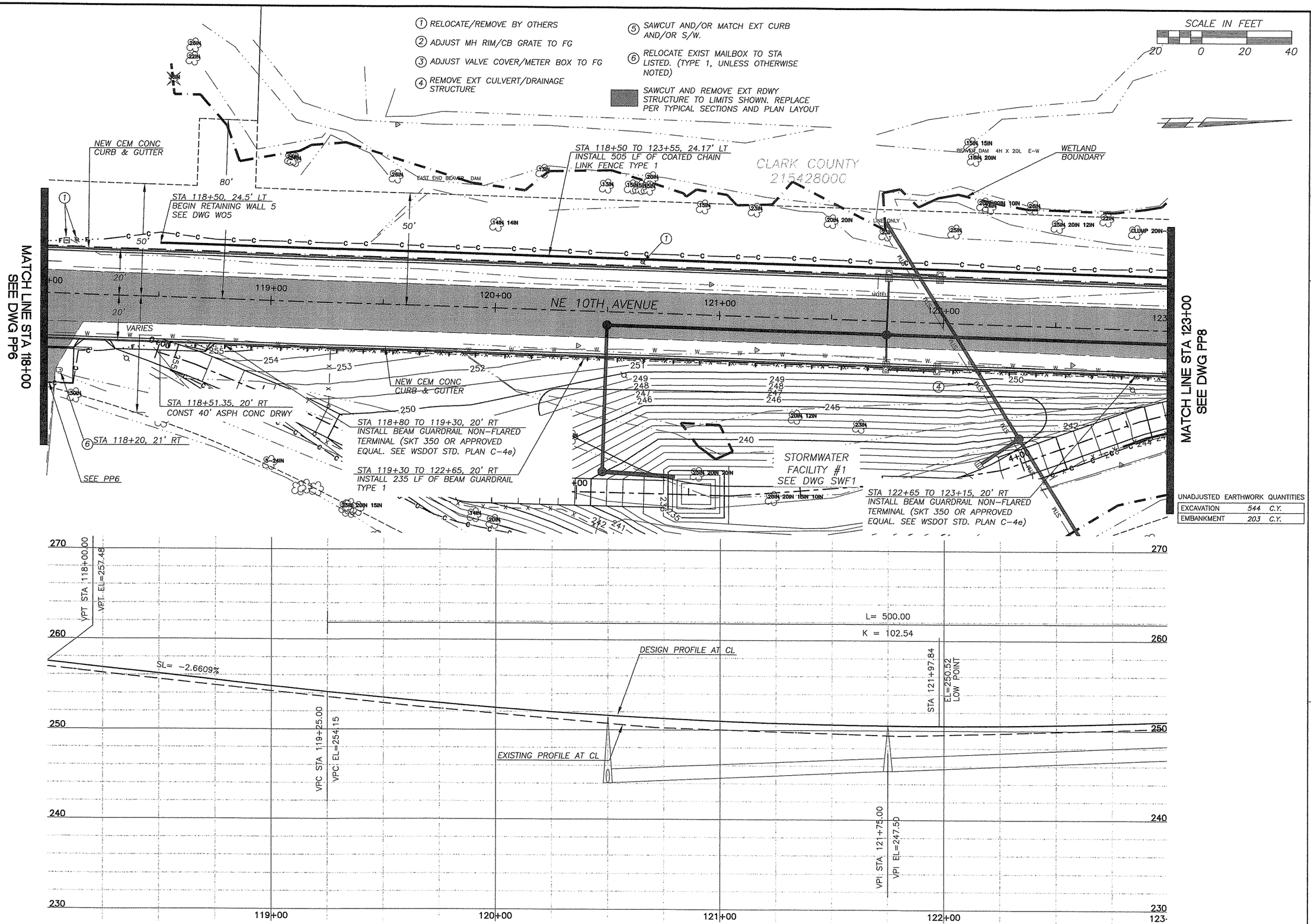

UNADJUSTED EARTHWORK QUANTITIES

EXCAVATION	544	C.Y.
EMBANKMENT	203	C.Y.

DESIGNED	TG
DRAWN	RK
CRP	311522
HOR.	1"=20'
VERT.	1"=5'
DATE	3/05/04
DWG:	PP7
SHEET 31	OF 55

CALL 48 HOURS BEFORE YOU DIG
1-800-553-4344
"It's the Law"
NORTHWEST UTILITIES NOTIFICATION CENTER

JAMES D. GRANCE
STATE OF WASHINGTON
PROFESSIONAL ENGINEER
EXPIRES JANUARY 20, 2006

DESIGN & ENGINEERING DIVISION
DESIGN SECTION

NE 10TH AVENUE
PLAN & PROFILE STA 118+00 TO 123+00

proud past, promising future
CLARK COUNTY
WASHINGTON

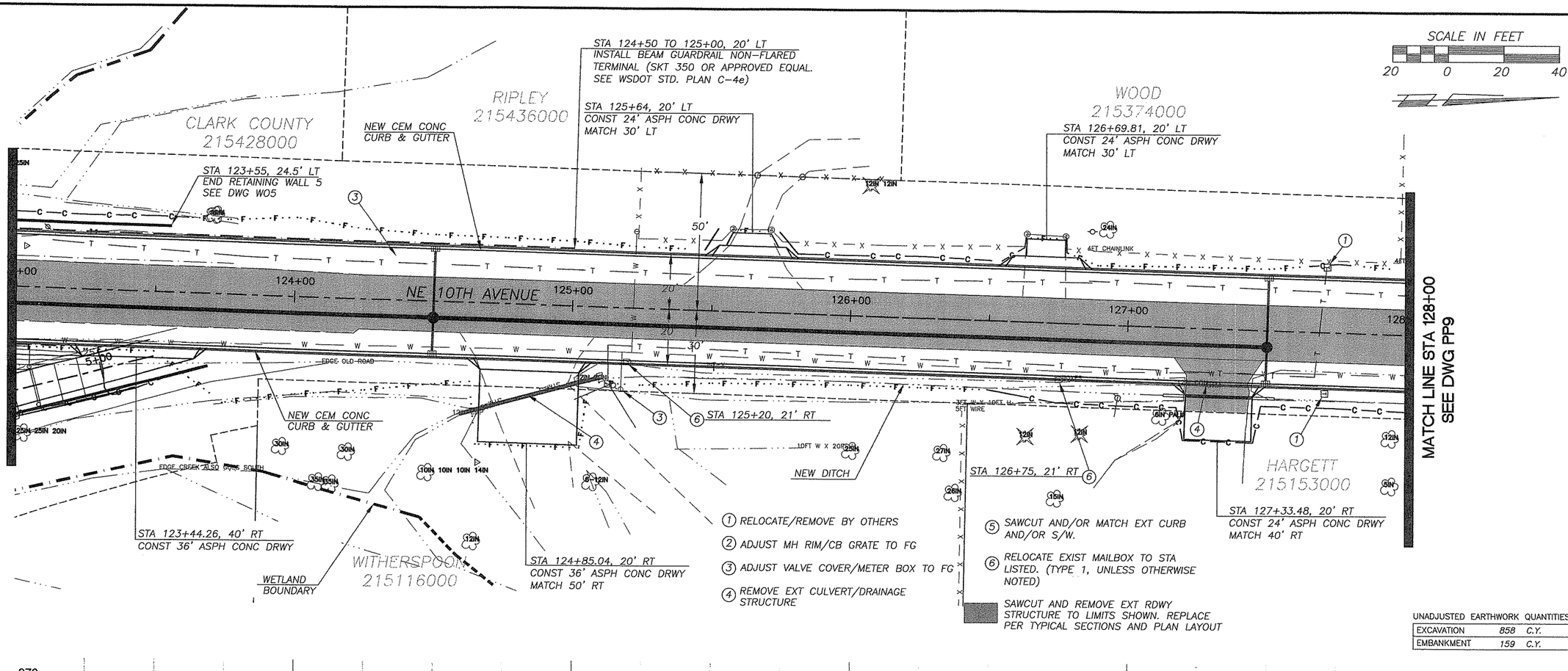

UNADJUSTED EARTHWORK QUANTITIES

EXCAVATION	858	C.Y.
EMBANKMENT	159	C.Y.

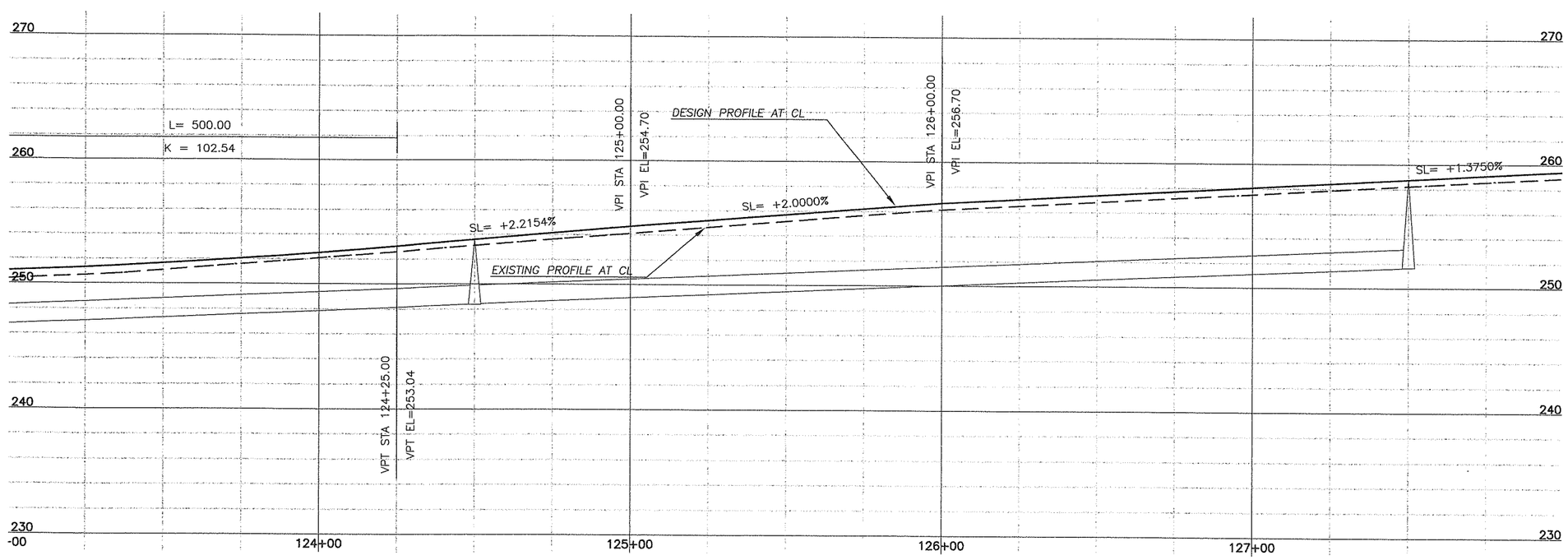

DESIGNED	TG
DRAWN	RK
CRP	311522
HOR.	1"=20'
VERT.	1"=5'
DATE	3/05/04
DWG:	PP8
SHEET 32	OF 55

CALL 48 HOURS BEFORE YOU DIG
1-800-553-4344
"It's the Law"
NORTHWEST UTILITIES NOTIFICATION CENTER

STEVEN D. CRAWFORD
STATE OF WASHINGTON
PROFESSIONAL ENGINEER
EXPIRES: JANUARY 20, 2005

DESIGN & ENGINEERING DIVISION
DESIGN SECTION

NE 10TH AVENUE
PLAN & PROFILE STA 123+00 TO 128+00

proud past, promising future
CLARK COUNTY
WASHINGTON

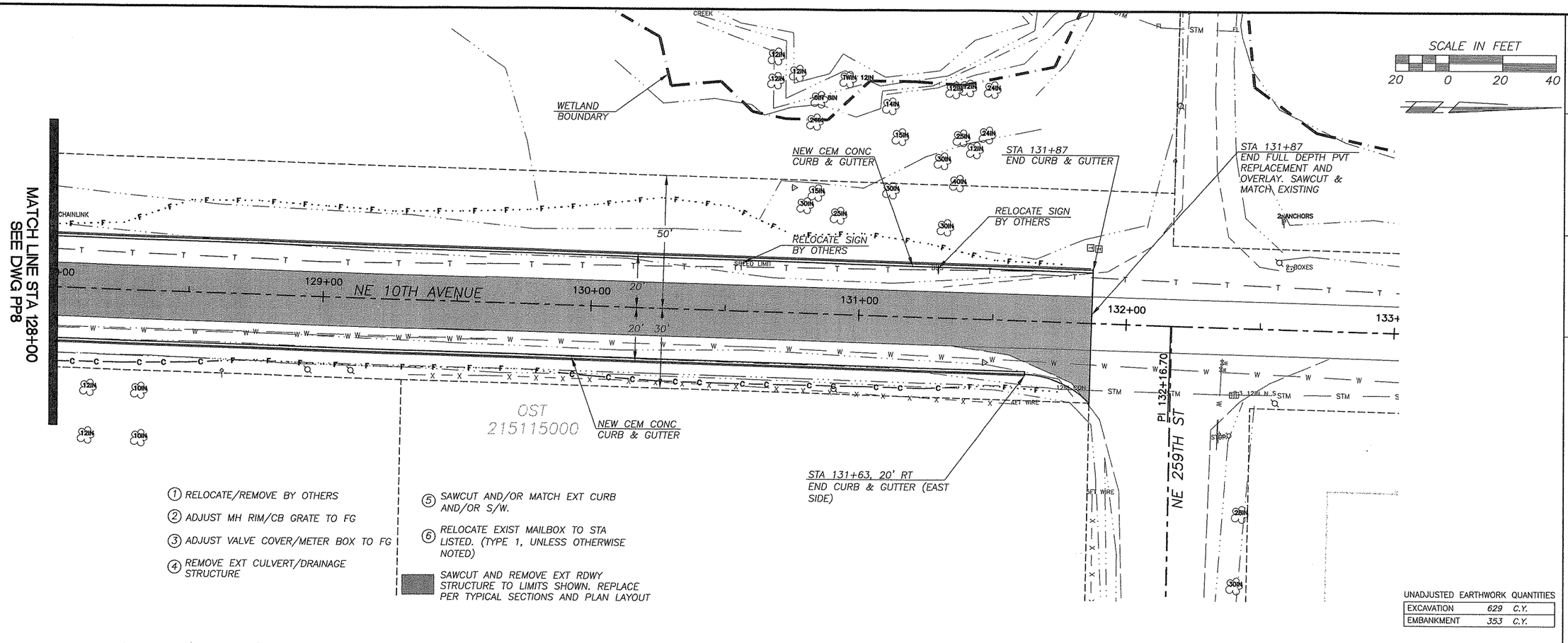

1. RELOCATE/REMOVE BY OTHERS
2. ADJUST MH RIM/CB GRATE TO FG
3. ADJUST VALVE COVER/METER BOX TO FG
4. REMOVE EXT CULVERT/DRAINAGE STRUCTURE
5. SAWCUT AND/OR MATCH EXT CURB AND/OR S/W.
6. RELOCATE EXIST MAILBOX TO STA LISTED. (TYPE 1, UNLESS OTHERWISE NOTED)

SAWCUT AND REMOVE EXT RDWY STRUCTURE TO LIMITS SHOWN. REPLACE PER TYPICAL SECTIONS AND PLAN LAYOUT

UNADJUSTED EARTHWORK QUANTITIES

EXCAVATION	629	C.Y.
EMBANKMENT	353	C.Y.

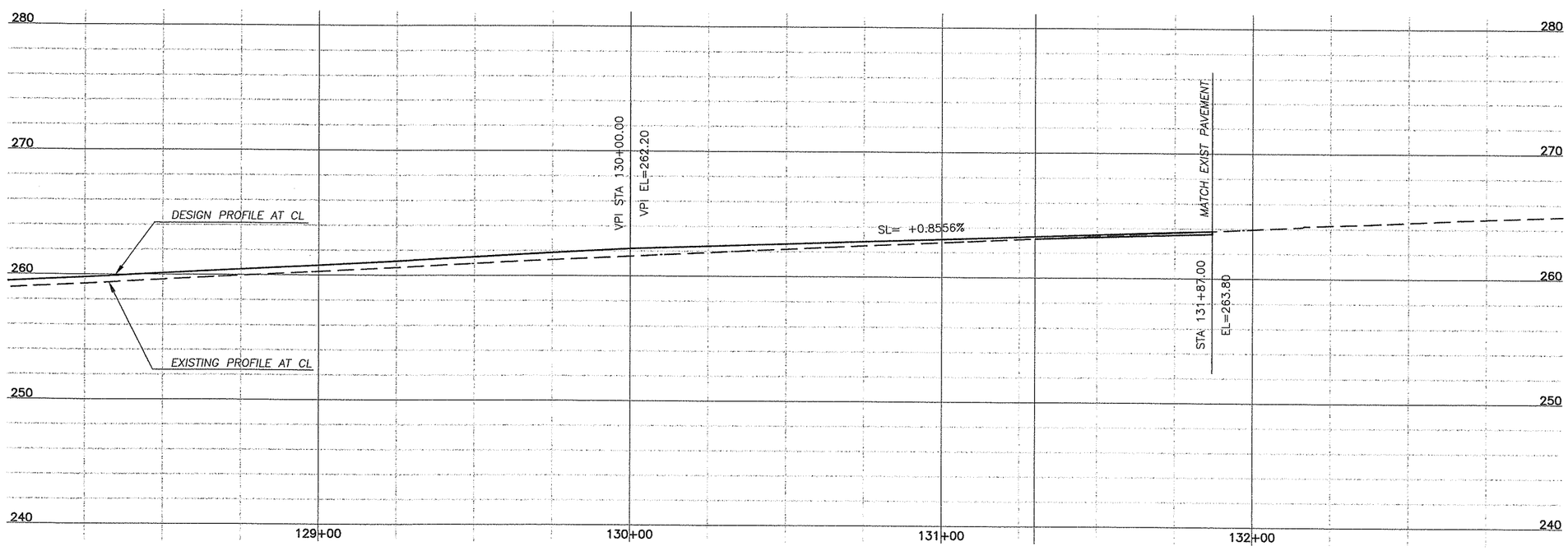

DESIGNED	TG
DRAWN	RK
CRP	311522
HOR.	1"=20'
VERT.	1"=5'
DATE	3/05/04
DWG:	PP9
SHEET 33	OF 55

CALL 48 HOURS BEFORE YOU DIG 1-800-553-4344 "It's the Law" NORTHWEST UTILITIES NOTIFICATION CENTER

LYNN S. D. GRANGE STATE OF WASHINGTON 20288 REGISTERED PROFESSIONAL ENGINEER 3/11/04 EXPIRES JANUARY 20, 2005

DESIGN & ENGINEERING DIVISION
DESIGN SECTION

NE 10TH AVENUE
PLAN & PROFILE STA 128+00 TO E.O.P.

proud past, promising future

CLARK COUNTY WASHINGTON

SCALE IN FEET

20 0 20 40

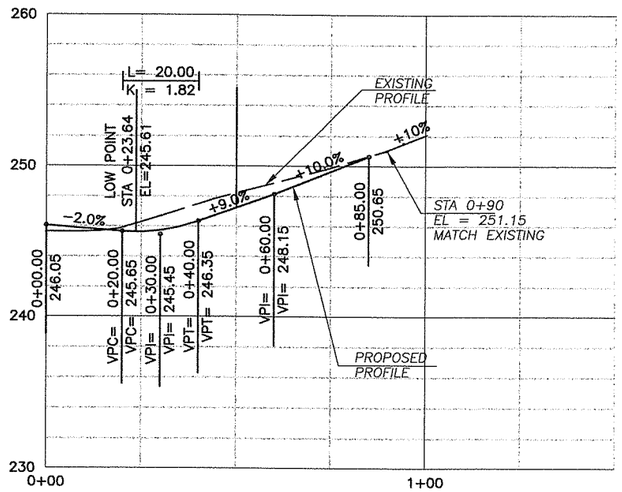

NE 249TH STREET PROFILE

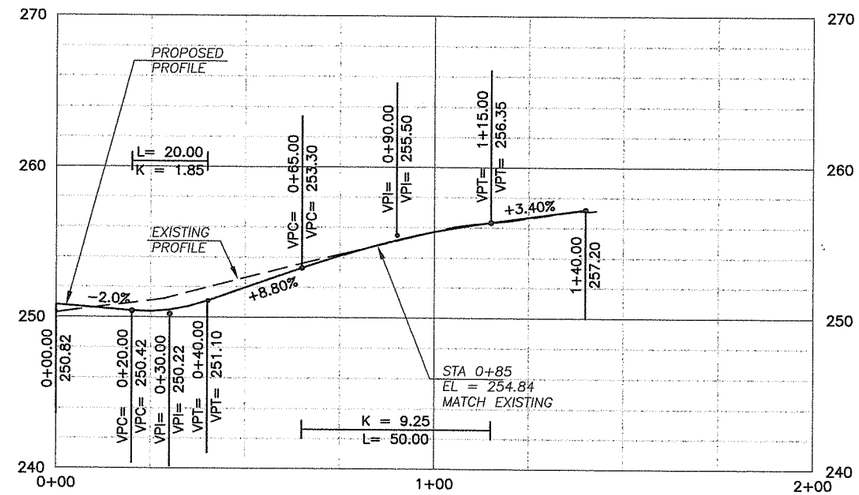

NE 246TH CIRCLE PROFILE

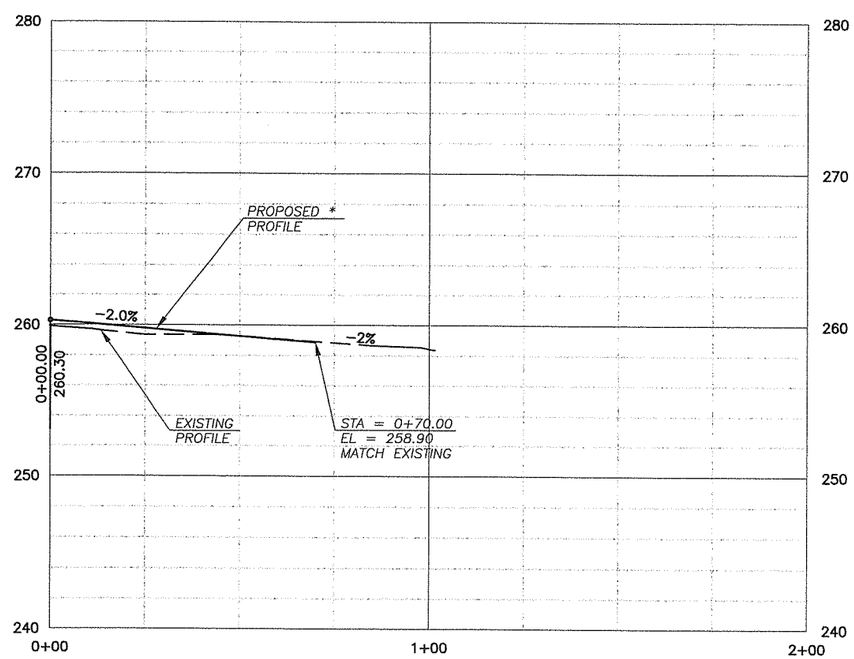

NE 253RD STREET PROFILE

* PROFILE SHOWN IS AT THE CONSTRUCTION CENTER LINE.

DESIGNED	TG
DRAWN	RK
CRP	311522
HOR.	1"=20'
VERT.	1"=5'
DATE	3/05/04
DWG:	PP10
SHEET 34	OF 55

CALL 48 HOURS BEFORE YOU DIG 1-800-553-4344 "It's the Law" NORTHWEST UTILITIES NOTIFICATION CENTER

STEVEN D. CRAMER STATE OF WASHINGTON 37900 REGISTERED PROFESSIONAL ENGINEER EXPIRES JANUARY 20, 2006

DESIGN & ENGINEERING DIVISION
DESIGN SECTION

NE 10TH AVENUE
SIDE STREET PROFILES

proud past, promising future

CLARK COUNTY WASHINGTON

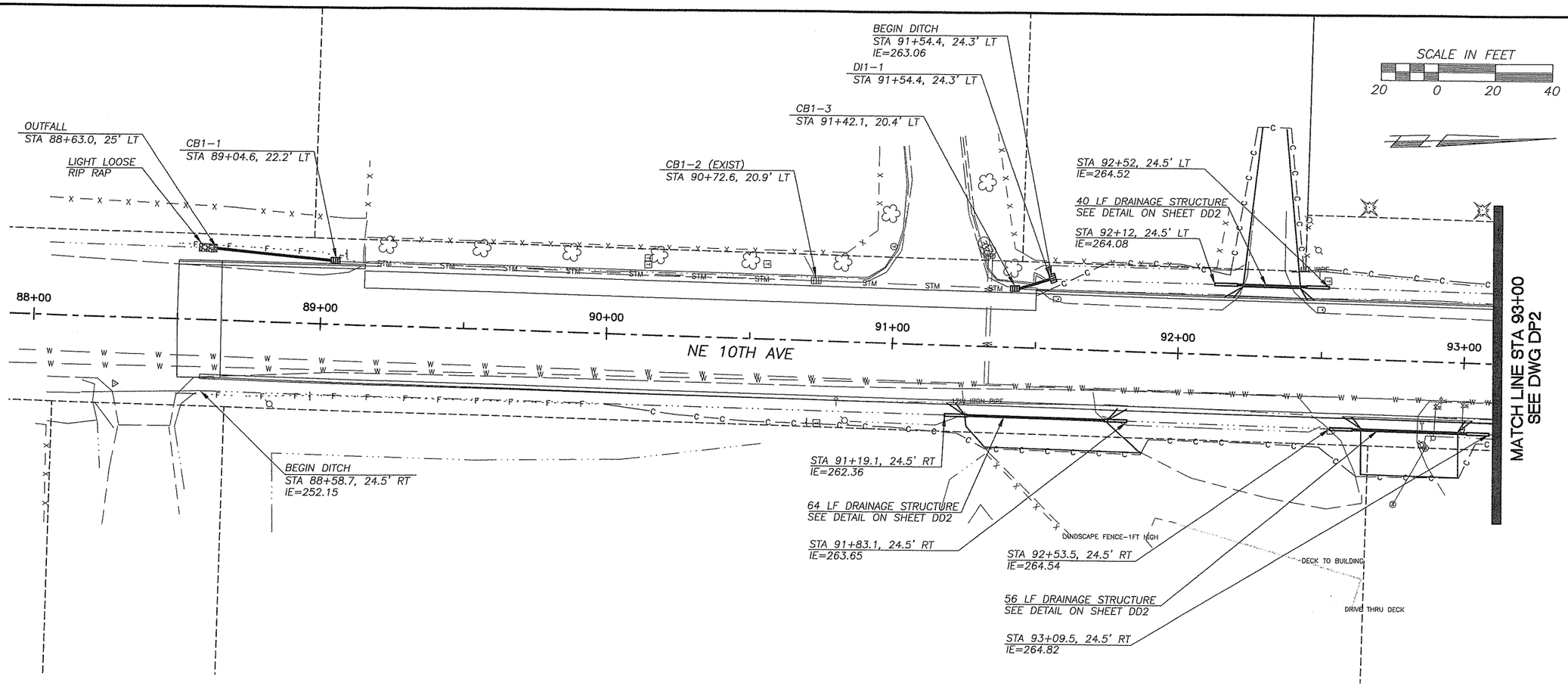

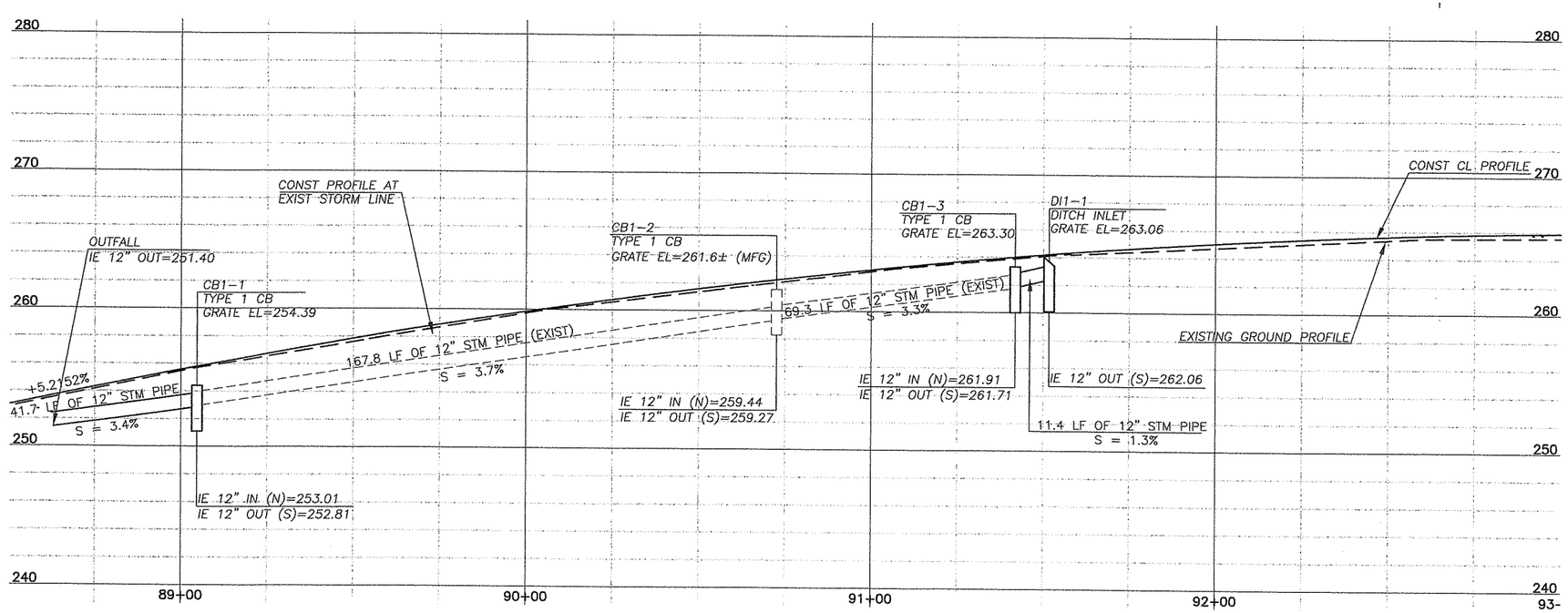

DESIGNED	JB
DRAWN	RK
CRP	311522
HOR.	1"=20'
VERT.	1"=5'
DATE	3/05/04
DWG.	DP1
SHEET 35	OF 55

CALL 48 HOURS BEFORE YOU DIG 1-800-553-4344 "It's the Law" NORTHWEST UTILITIES NOTIFICATION CENTER

STATE OF WASHINGTON JAMES F. BARRETT REGISTERED PROFESSIONAL ENGINEER EXPIRES MARCH 17, 2005

DESIGN & ENGINEERING DIVISION
DESIGN SECTION

NE 10TH AVENUE
DRAINAGE PLAN STA BOP TO 93+00

proud past, promising future
CLARK COUNTY WASHINGTON

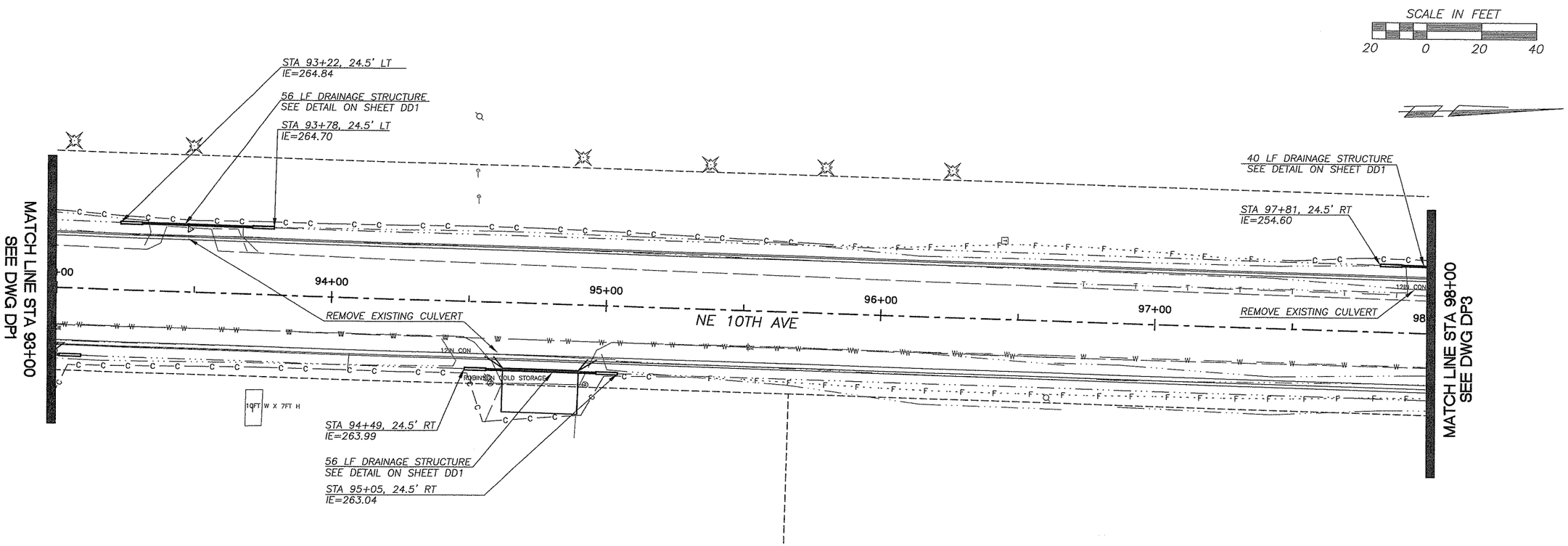

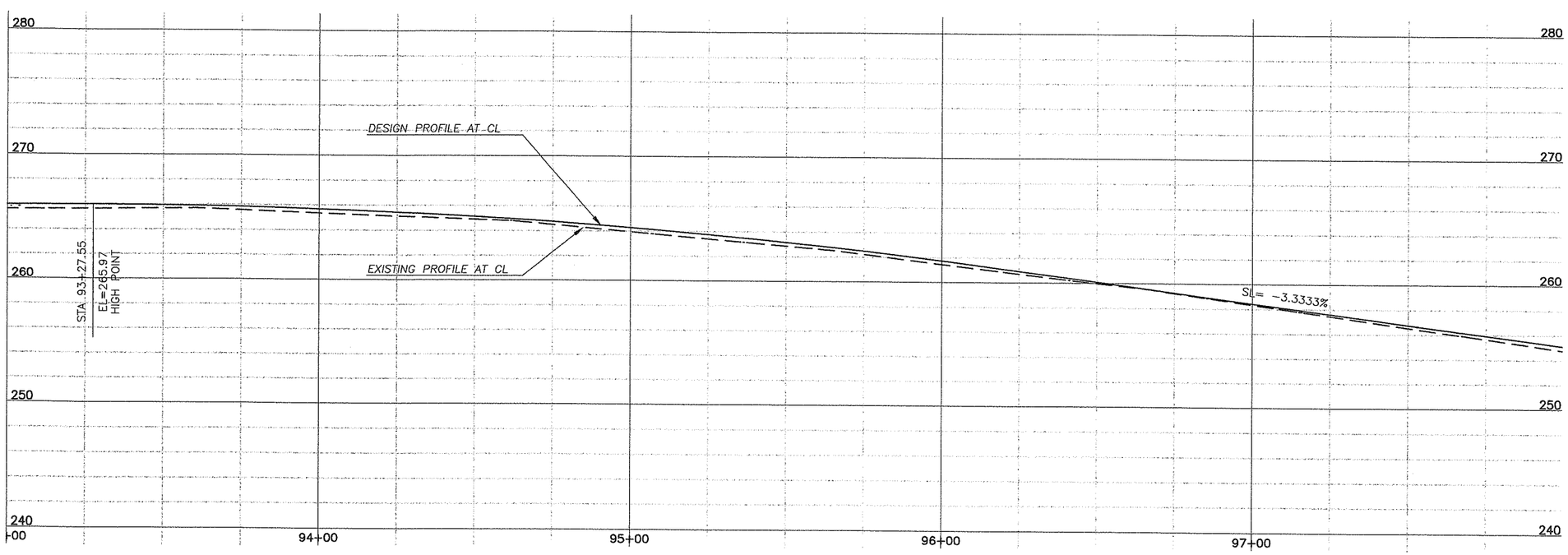

DESIGNED	JB
DRAWN	RK
CRP	311522
HOR.	1"=20'
VERT.	1"=5'
DATE	3/05/04
DWG:	DP2
SHEET 36	OF 55

CALL 48 HOURS BEFORE YOU DIG 1-800-553-4344 "It's the Law" NORTHWEST UTILITIES NOTIFICATION CENTER

DESIGN & ENGINEERING DIVISION
DESIGN SECTION

NE 10TH AVENUE
DRAINAGE PLAN STA 93+00 TO 98+00

proud past, promising future
CLARK COUNTY WASHINGTON

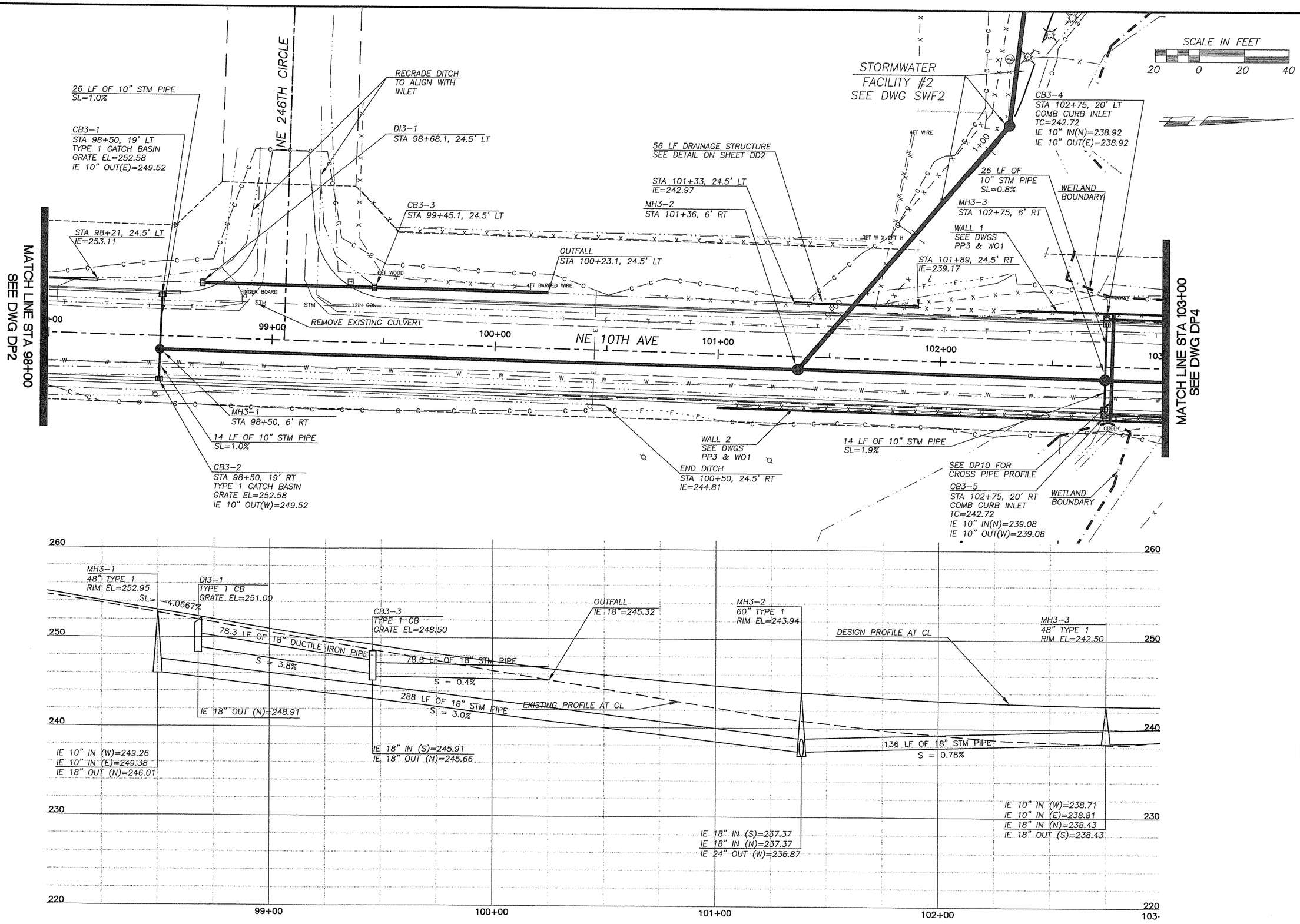

DESIGNED	JB
DRAWN	RK
CRP	311522
HOR.	1"=20'
VERT.	1"=5'
DATE	3/05/04
DWG:	DP3
SHEET 37	OF 55

CALL 48 HOURS BEFORE YOU DIG
1-800-553-4344
"It's the Law"
NORTHWEST UTILITIES NOTIFICATION CENTER

STEVEN F. BARNETT
STATE OF WASHINGTON
36471
REGISTERED PROFESSIONAL ENGINEER
EXPIRES: MARCH 17, 2005

DESIGN & ENGINEERING DIVISION
DESIGN SECTION

NE 10TH AVENUE
DRAINAGE PLAN STA 98+00 TO 103+00

proud past, promising future
CLARK COUNTY
WASHINGTON

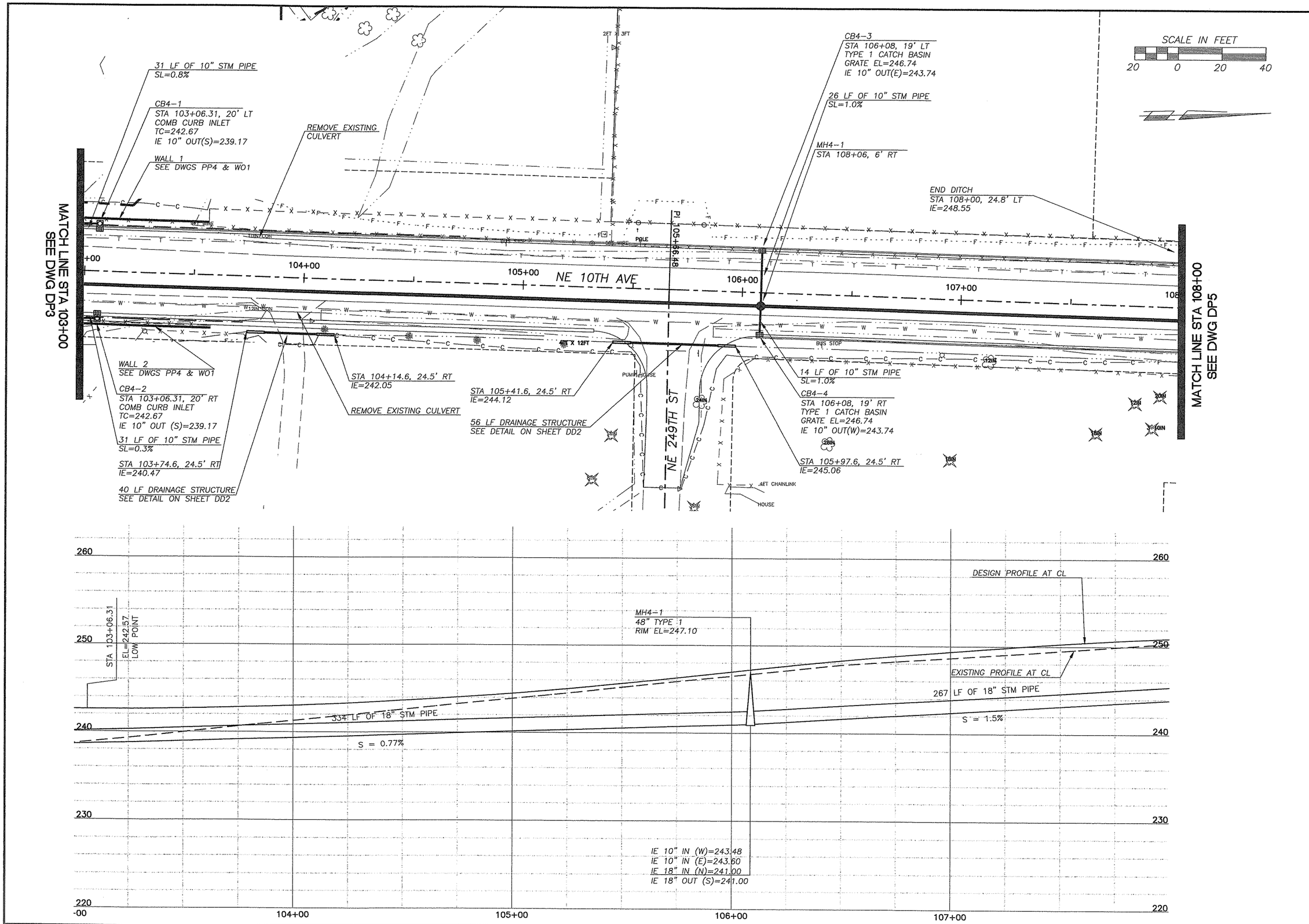

DESIGNED JB
DRAWN RK
CRP 311522
HOR. 1"=20'
VERT. 1"=5'
DATE 3/05/04
DWG: DP4
SHEET 38 OF 55

CALL 48 HOURS BEFORE YOU DIG
1-800-553-4344
"It's the Law"
NORTHWEST UTILITIES NOTIFICATION CENTER

ALBERT F. BABEL
STATE OF WASHINGTON
10841
PROFESSIONAL ENGINEER
EXPIRES MARCH 1, 2005

DESIGN & ENGINEERING DIVISION
DESIGN SECTION

NE 10TH AVENUE
DRAINAGE PLAN STA 103+00 TO 108+00

proud past, promising future
CLARK COUNTY
WASHINGTON

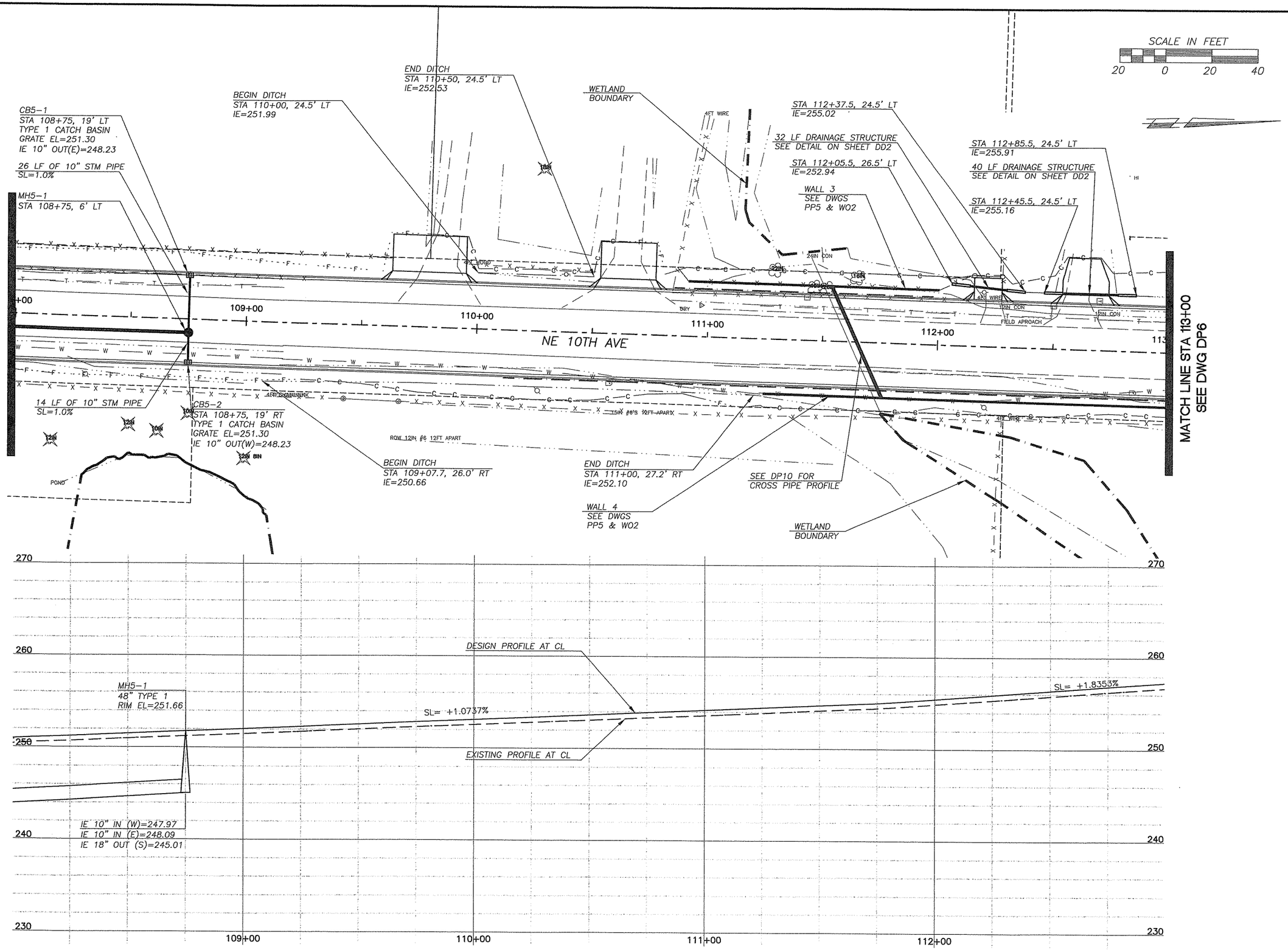

DESIGNED JB
DRAWN RK
CRP 311522
HOR. 1"=20'
VERT. 1"=5'
DATE 3/05/04
DWG: DP5
SHEET 39 OF 55

CALL 48 HOURS BEFORE YOU DIG
1-800-553-4344
"It's the Law"
NORTHWEST UTILITIES NOTIFICATION CENTER

STATE OF WASHINGTON
JAMES F. BIRNEY
34471
REGISTERED PROFESSIONAL ENGINEER
EXPIRES: MARCH 17, 2005

DESIGN & ENGINEERING DIVISION
DESIGN SECTION

NE 10TH AVENUE
DRAINAGE PLAN STA 108+00 TO 113+00

proud past, promising future
CLARK COUNTY
WASHINGTON

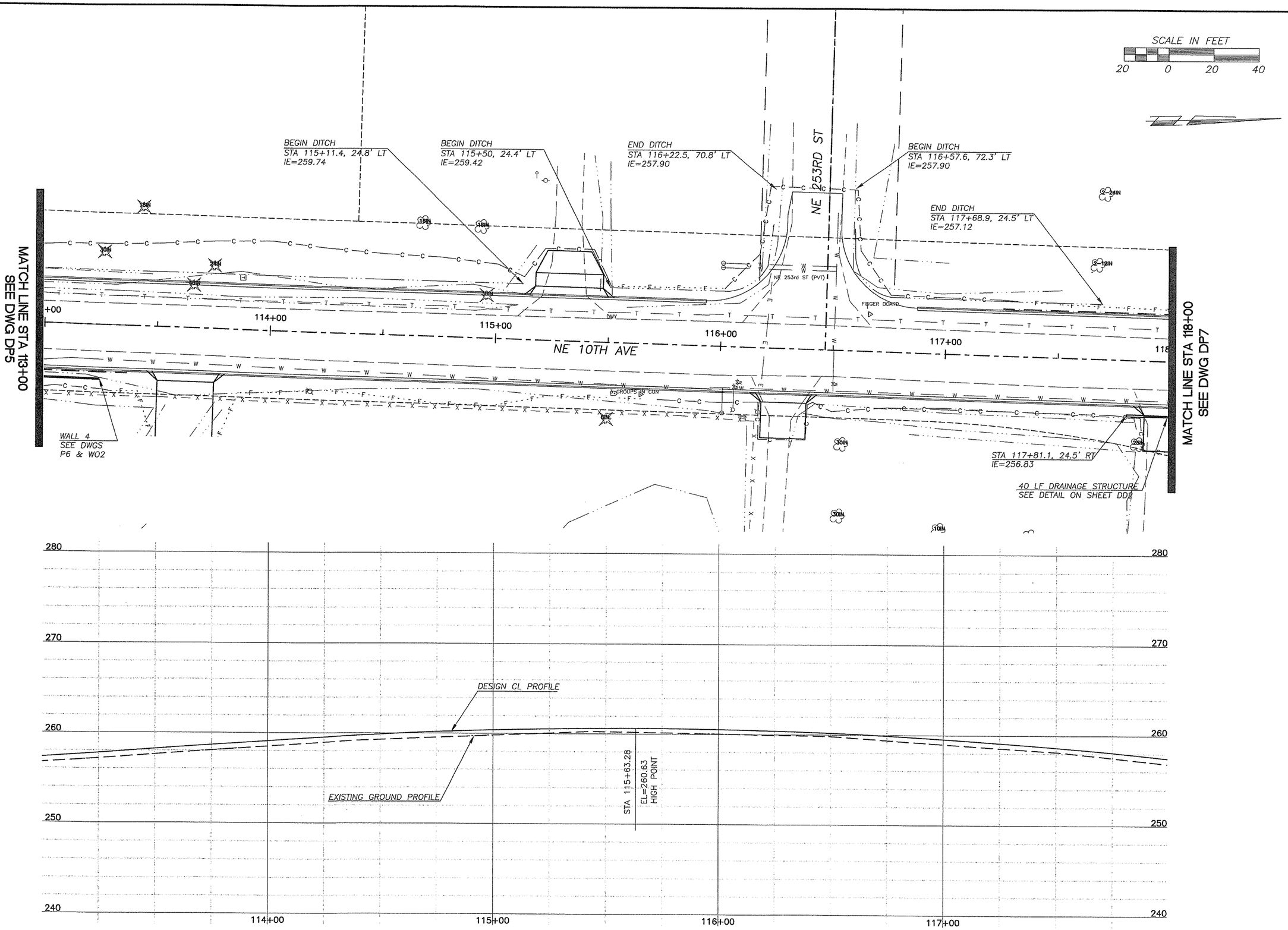

DESIGNED JB
DRAWN RK
CRP 311522
HOR. 1"=20'
VERT. 1"=5'
DATE 3/05/04
DWG: DP6
SHEET 40 OF 55

CALL 48 HOURS BEFORE YOU DIG
1-800-553-4344
"It's the Law"
NORTHWEST UTILITIES NOTIFICATION CENTER

STATE OF WASHINGTON
JAMES F. BAKER
18471
REGISTERED PROFESSIONAL ENGINEER
3/11/04
EXPIRES MARCH 17, 2005

DESIGN & ENGINEERING DIVISION
DESIGN SECTION

NE 10TH AVENUE
DRAINAGE PLAN STA 113+00 TO 118+00

proud past, promising future
CLARK COUNTY
WASHINGTON

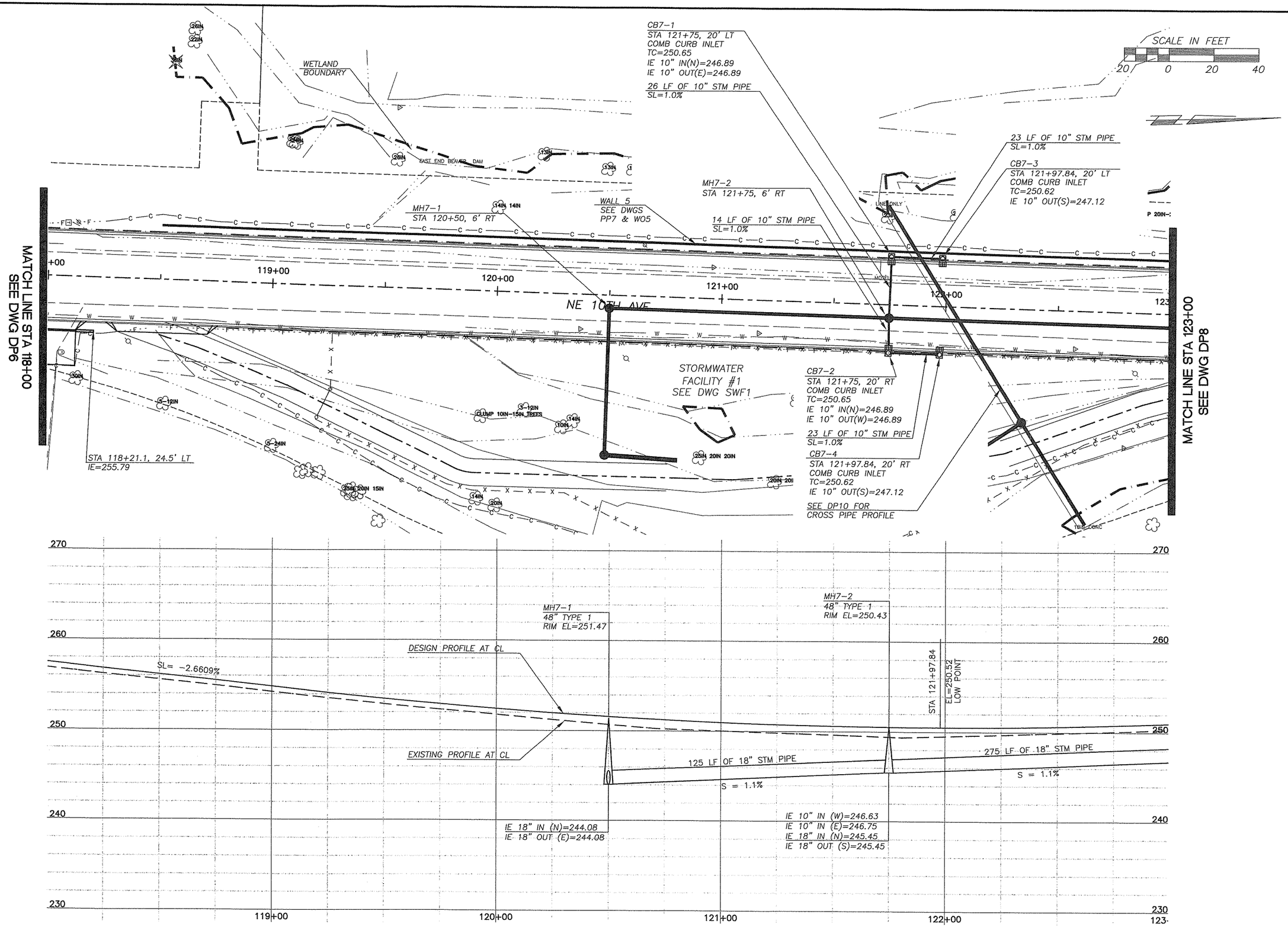

DESIGNED JB
DRAWN RK
CRP 311522
HOR. 1"=20'
VERT. 1"=5'
DATE 3/05/04
DWG: DP7
SHEET 41 OF 55

CALL 48 HOURS BEFORE YOU DIG
1-800-553-4344
"It's the Law"
NORTHWEST UTILITIES NOTIFICATION CENTER

JEFFREY F. BLONIEN
STATE OF WASHINGTON
PE 36471
PROFESSIONAL ENGINEER
EXPIRES: MARCH 17, 2005

DESIGN & ENGINEERING DIVISION
DESIGN SECTION

NE 10TH AVENUE
DRAINAGE PLAN STA 118+00 TO 123+00

proud past, promising future
CLARK COUNTY
WASHINGTON

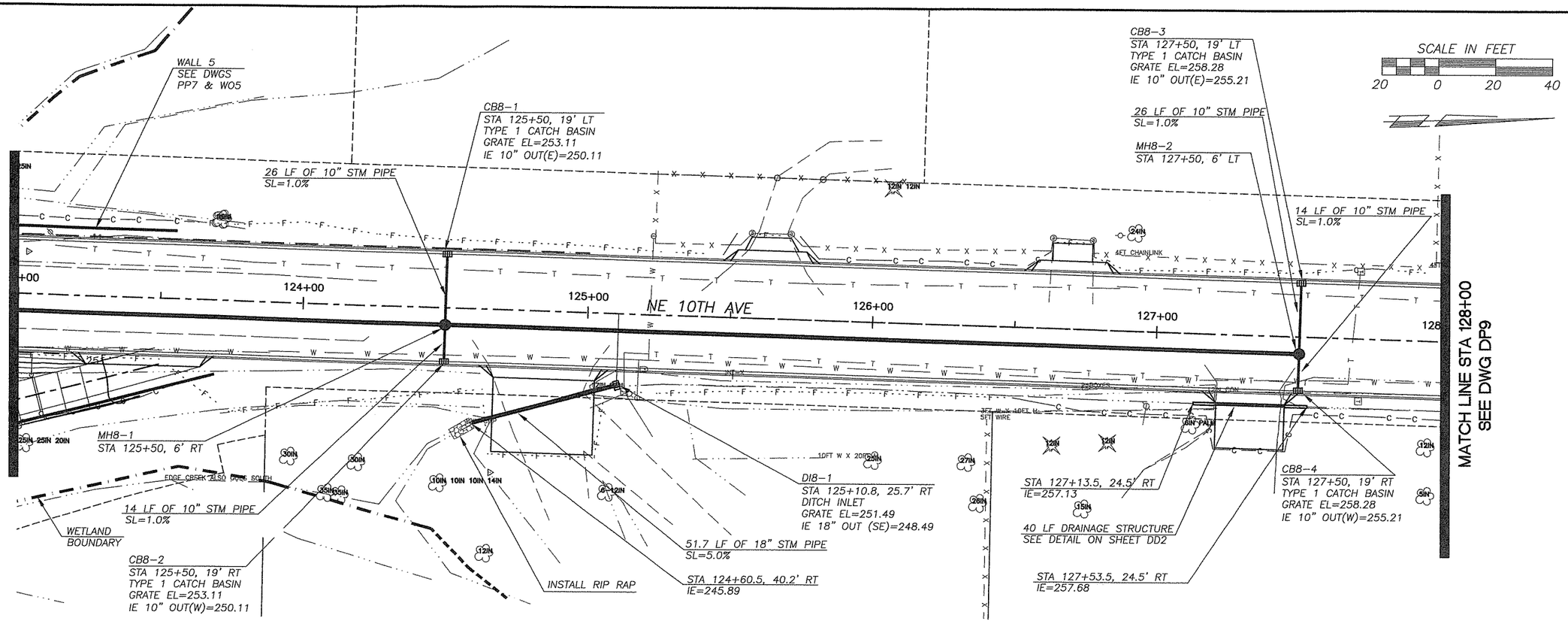

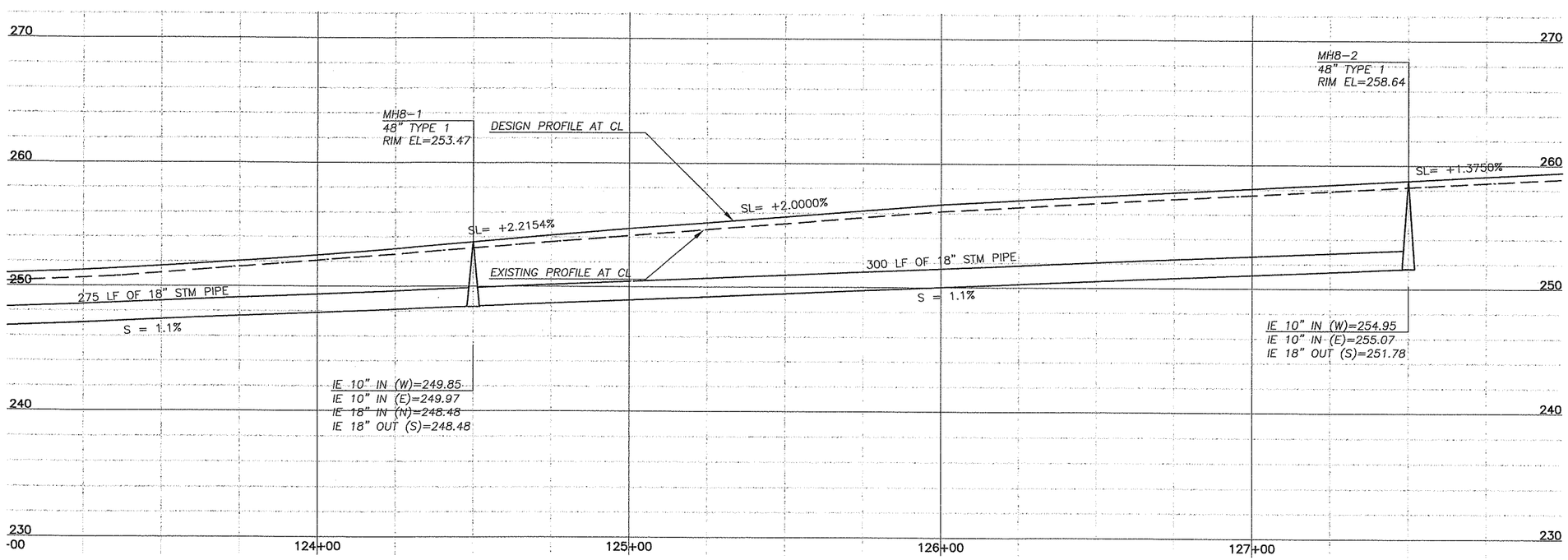

DESIGNED	JB
DRAWN	RK
CRP	311522
HOR.	1"=20'
VERT.	1"=20'
DATE	3/05/04
DWG:	DP8
SHEET 42	OF 55

CALL 48 HOURS BEFORE YOU DIG
1-800-553-4344
"It's the Law"
NORTHWEST UTILITIES NOTIFICATION CENTER

STATE OF WASHINGTON
JAMES F. BENNETT
PROFESSIONAL ENGINEER
EXPIRES MARCH 17, 2005

DESIGN & ENGINEERING DIVISION
DESIGN SECTION

NE 10TH AVENUE
DRAINAGE PLAN STA 123+00 TO 128+00

proud past, promising future
CLARK COUNTY
WASHINGTON

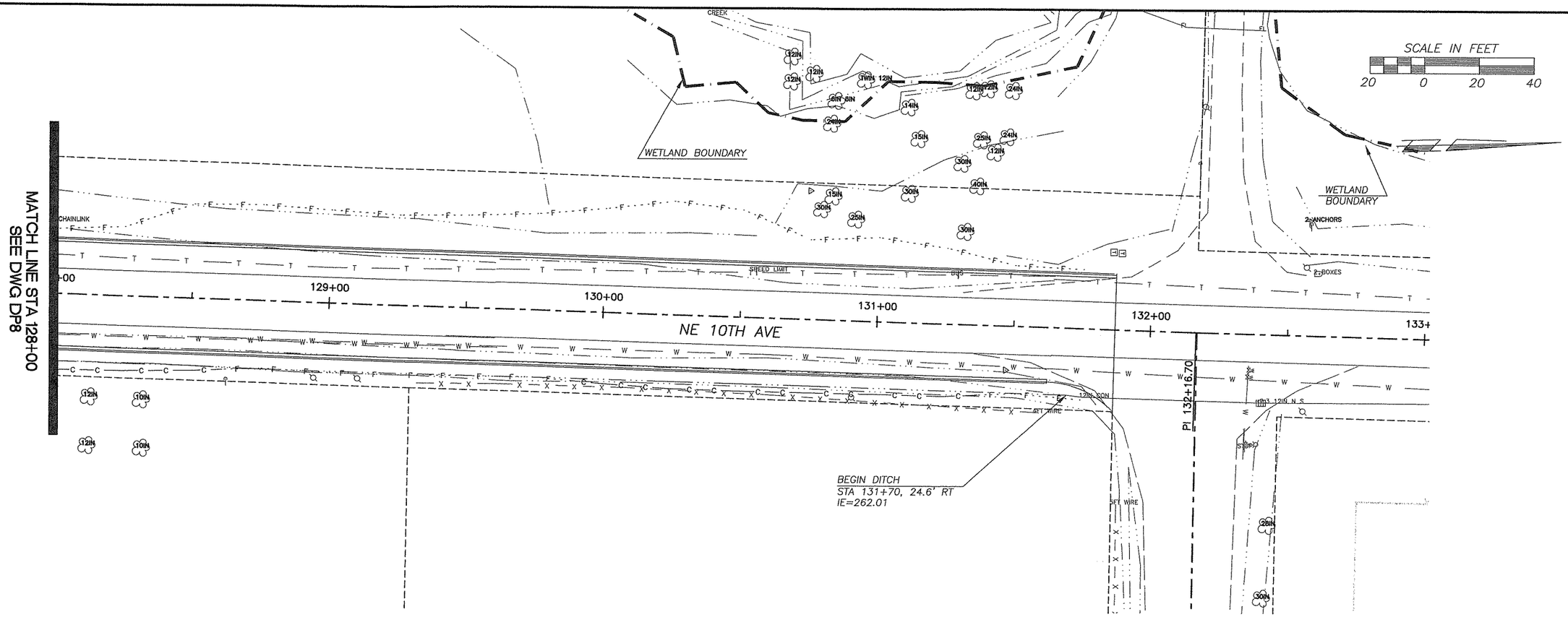

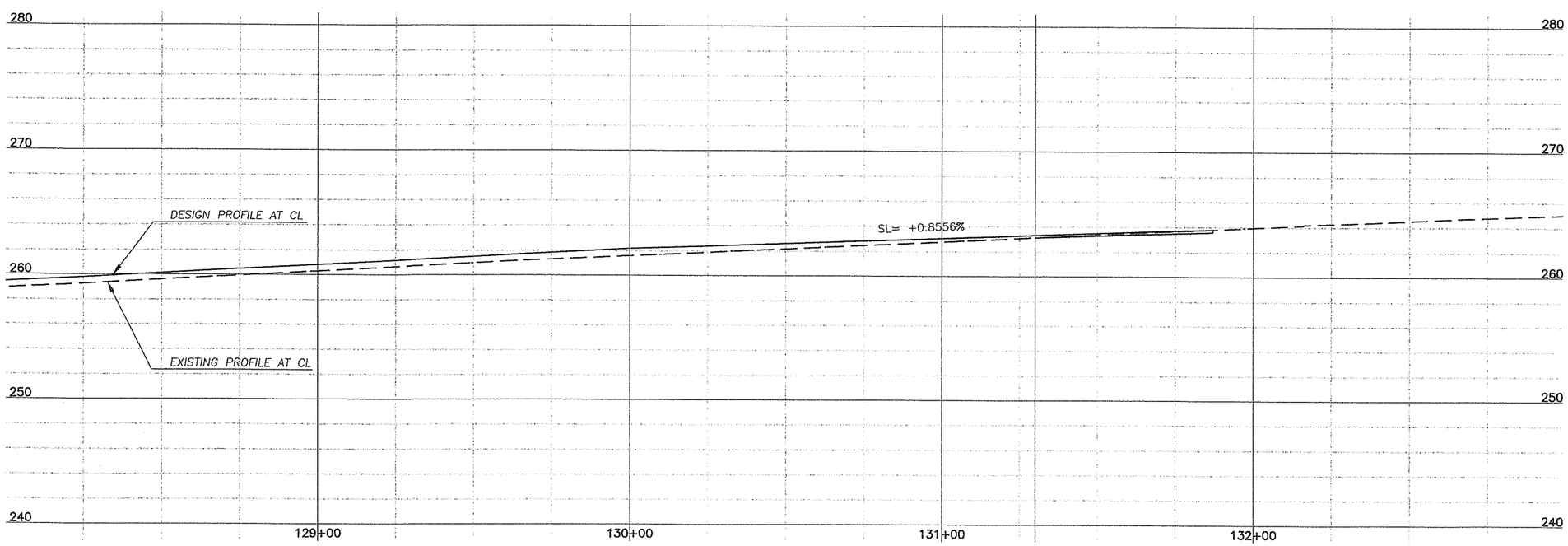

DESIGNED	JB
DRAWN	RK
CRP	311522
HOR.	1"=20'
VERT.	1"=5'
DATE	3/05/04
DWG:	DP9
SHEET 43	OF 55

CALL 48 HOURS BEFORE YOU DIG
1-800-553-4344
"It's the Law"
NORTHWEST UTILITIES NOTIFICATION CENTER

STEPHEN F. BARNETT
STATE OF WASHINGTON
38471
REGISTERED PROFESSIONAL ENGINEER
EXPIRES: MARCH 17, 2005

DESIGN & ENGINEERING DIVISION
DESIGN SECTION

NE 10TH AVENUE
DRAINAGE PLAN STA 128+00 TO 133+00

proud past, promising future
CLARK COUNTY
WASHINGTON

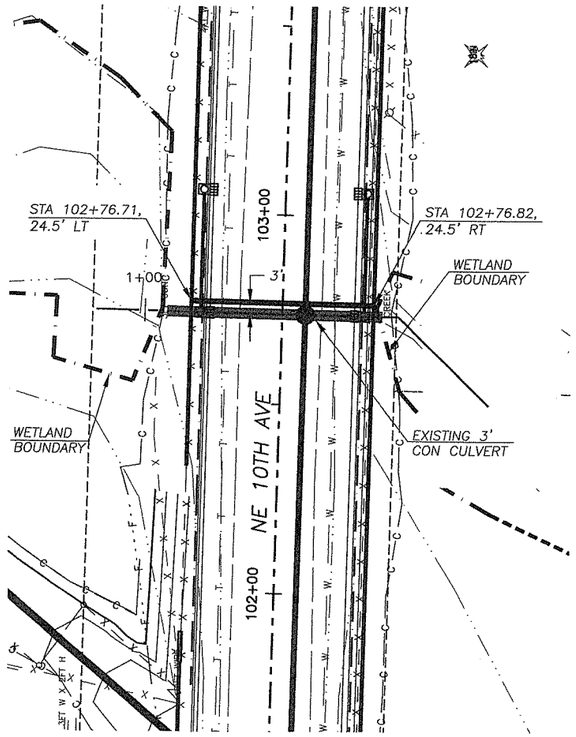

CULVERT 1 PLAN VIEW

ROADWAY STA 102+75

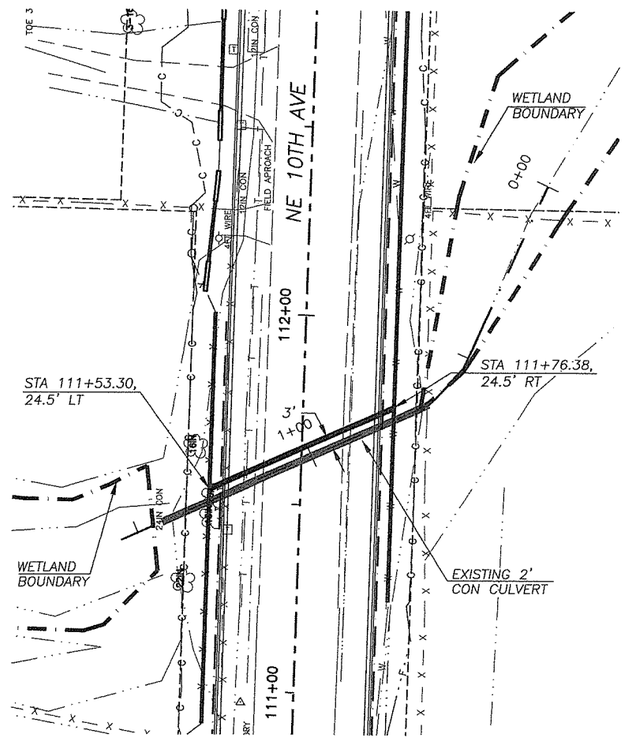

CULVERT 2 PLAN VIEW

ROADWAY STA 111+61

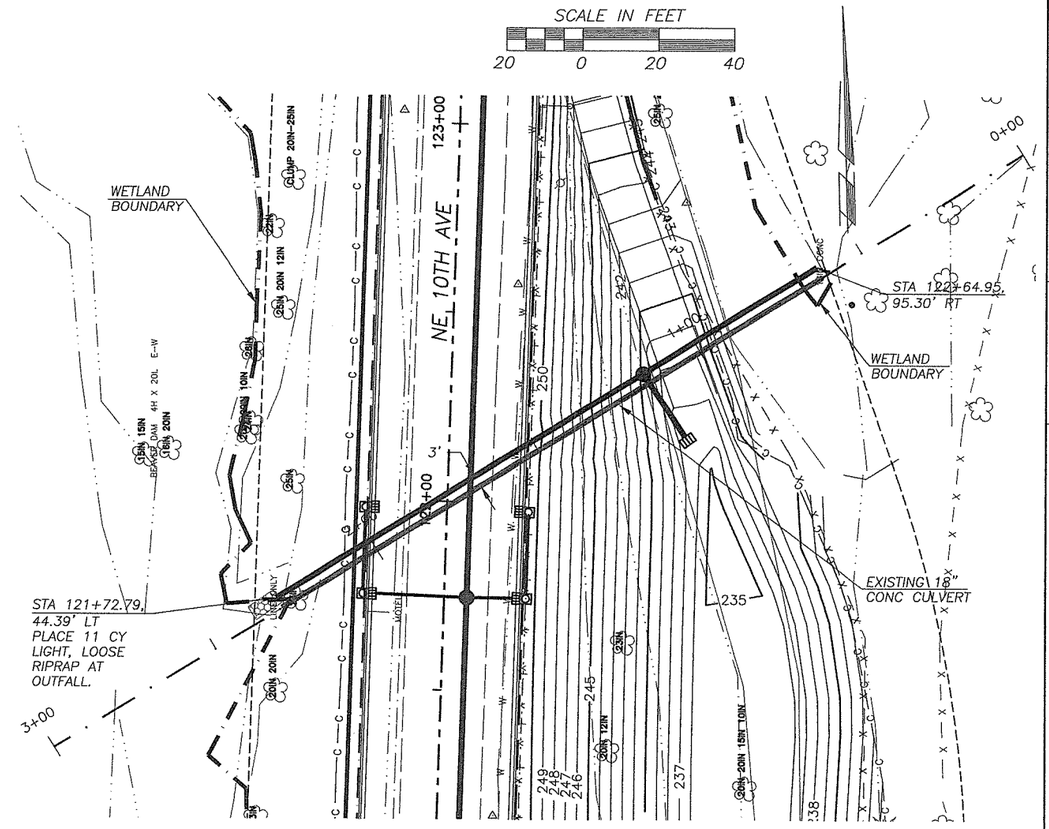

CULVERT 3 PLAN VIEW

ROADWAY STA 122+00

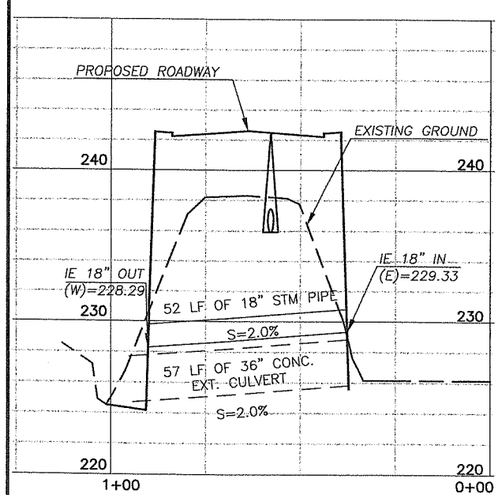

CULVERT 1 CROSS SECTION

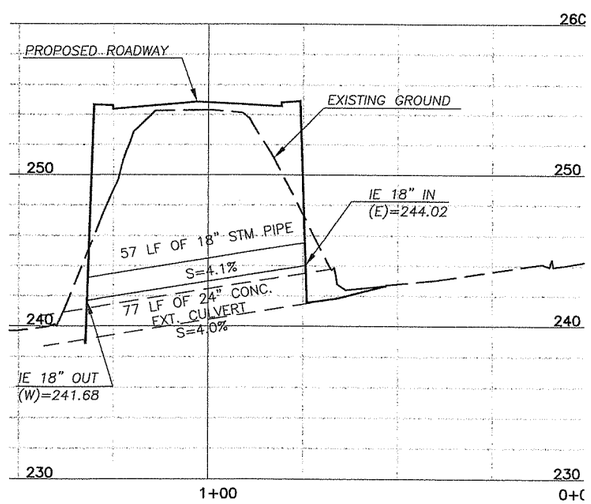

CULVERT 2 CROSS SECTION

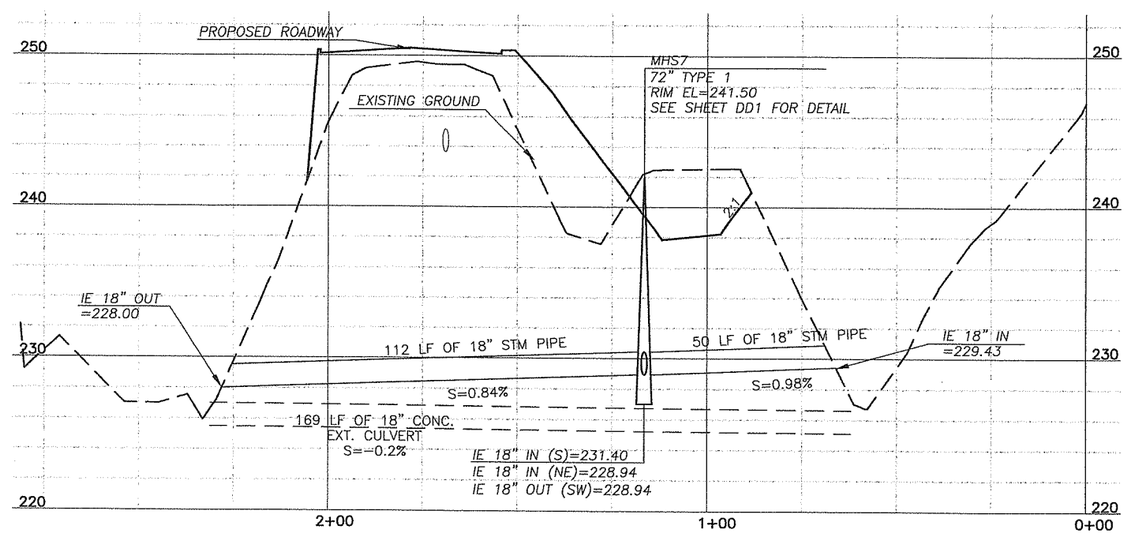

CULVERT 3 CROSS SECTION

DESIGNED	JB
DRAWN	RK
CRP	311522
HOR.	1"=20'
VERT.	1"=5'
DATE	3/05/04
DWG:	DP10
SHEET 44	OF 55

CALL 48 HOURS BEFORE YOU DIG 1-800-553-4344 "It's the Law" NORTHWEST UTILITIES NOTIFICATION CENTER

LICENSED PROFESSIONAL ENGINEER STATE OF WASHINGTON JAMES F. BASNET 38471 EXPIRES: MARCH, 17, 2005

DESIGN & ENGINEERING DIVISION
DESIGN SECTION

NE 10TH AVENUE
DRAINAGE PLAN CULVERT

proud past, promising future

CLARK COUNTY WASHINGTON

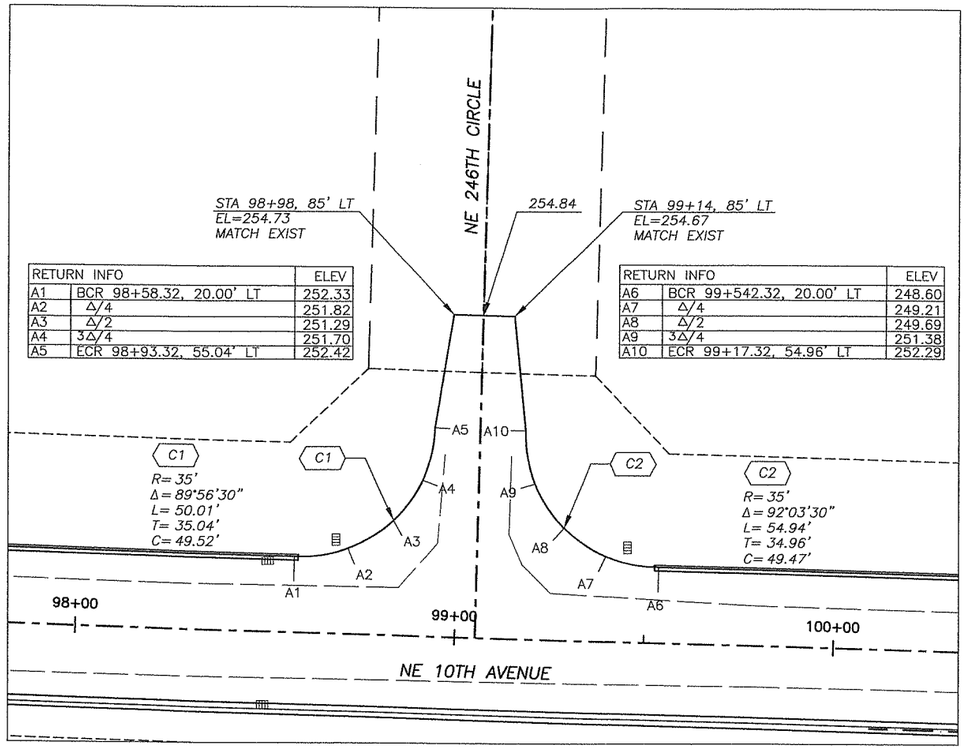

RETURN INFO		ELEV
A1	BCR 98+58.32, 20.00' LT	252.33
A2	Δ/4	251.82
A3	Δ/2	251.29
A4	3Δ/4	251.70
A5	ECR 98+93.32, 55.04' LT	252.42

RETURN INFO		ELEV
A6	BCR 99+542.32, 20.00' LT	248.60
A7	Δ/4	249.21
A8	Δ/2	249.69
A9	3Δ/4	251.38
A10	ECR 99+17.32, 54.96' LT	252.29

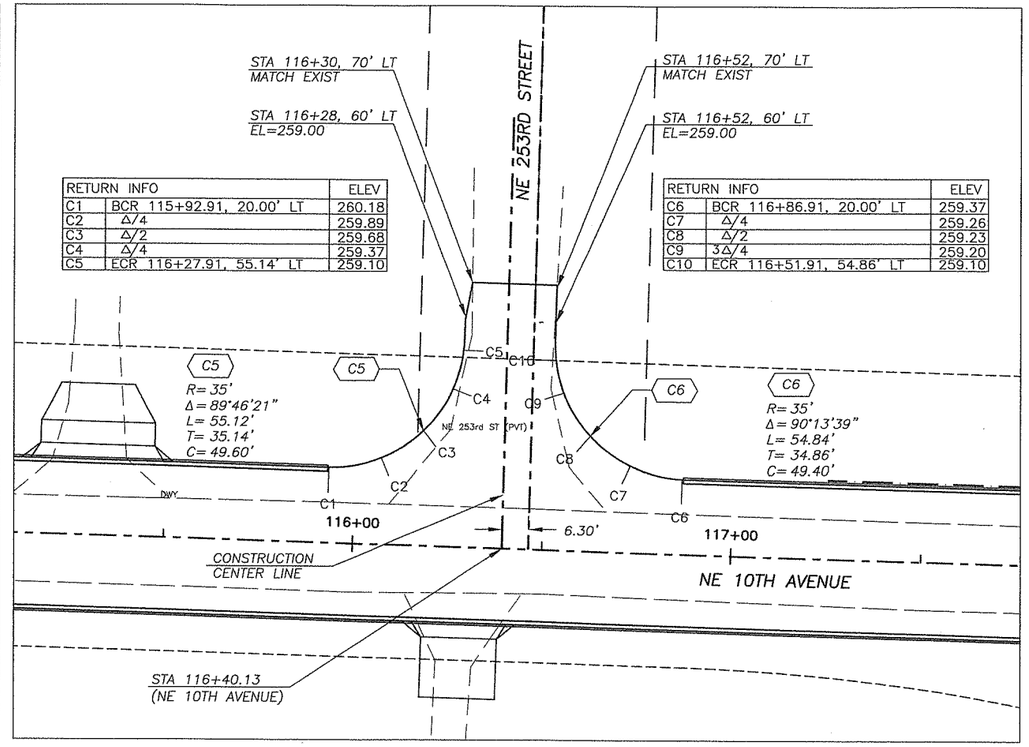

RETURN INFO		ELEV
C1	BCR 115+92.91, 20.00' LT	260.18
C2	Δ/4	259.89
C3	Δ/2	259.68
C4	Δ/4	259.37
C5	ECR 116+27.91, 55.14' LT	259.10

RETURN INFO		ELEV
C6	BCR 116+86.91, 20.00' LT	259.37
C7	Δ/4	259.26
C8	Δ/2	259.23
C9	3Δ/4	259.20
C10	ECR 116+51.91, 54.86' LT	259.10

SCALE IN FEET

20 0 20 40

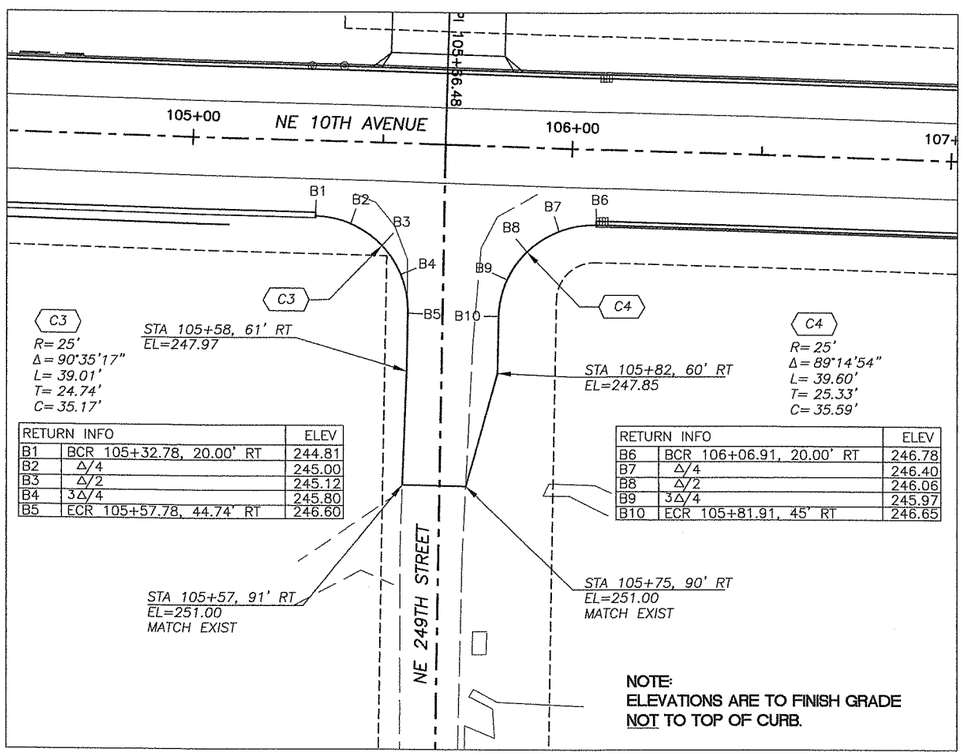

RETURN INFO		ELEV
B1	BCR 105+32.78, 20.00' RT	244.81
B2	Δ/4	245.00
B3	Δ/2	245.12
B4	3Δ/4	245.80
B5	ECR 105+57.78, 44.74' RT	246.60

RETURN INFO		ELEV
B6	BCR 106+06.91, 20.00' RT	246.78
B7	Δ/4	246.40
B8	Δ/2	246.06
B9	3Δ/4	245.97
B10	ECR 105+81.91, 45' RT	246.65

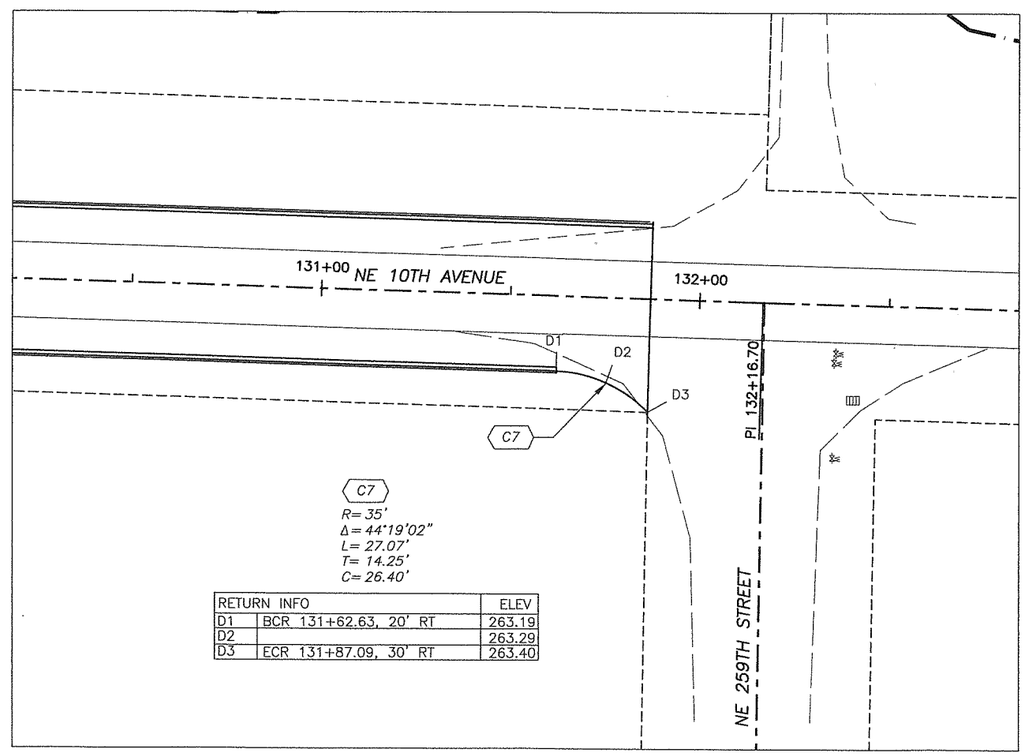

RETURN INFO		ELEV
D1	BCR 131+62.63, 20' RT	263.19
D2		263.29
D3	ECR 131+87.09, 30' RT	263.40

DESIGNED	TG
DRAWN	RK
CRP	311522
HOR.	1"=20'
VERT.	N/A
DATE	3/05/04
DWG:	101
SHEET 45	OF 55

CALL 48 HOURS BEFORE YOU DIG 1-800-553-4344 "It's the Law" NORTHWEST UTILITIES NOTIFICATION CENTER

THOMAS D. GRANGE STATE OF WASHINGTON 32058 PROFESSIONAL ENGINEER

EXPIRES-JANUARY 20, 2006

DESIGN & ENGINEERING DIVISION
DESIGN SECTION

NE 10TH AVENUE
INTERSECTION PLAN

proud past, promising future

CLARK COUNTY
WASHINGTON

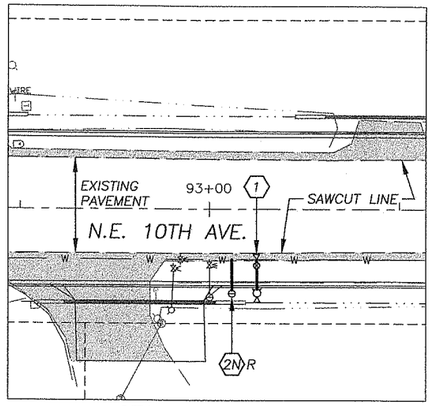

STA. 93+00
SCALE: 1" = 20'

LEGEND

	NEW WATER LINE
	NEW FIRE HYDRANT ASSEMBLY
	NEW WATER VALVE
	NEW THRUST BLOCK
8	TEMP. BLOWOFF ASSEMBLY
	NEW TRANSITION SLEEVE
	RELOCATED WATER METER
M.L.R.G.	MEGALUG RETAINER GLANDS
	RECONSTRUCTED SECTION (SEE PP1–PP4)
	NEW RETAINING WALL REINFORCEMENT GEOGRID

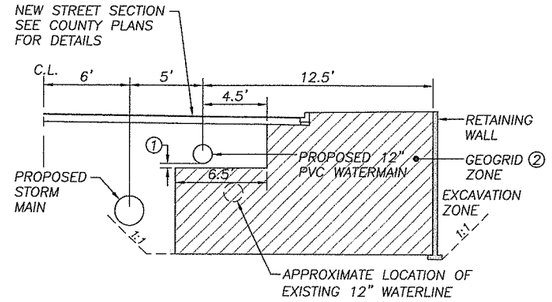

1 MAINTAIN MINIMUM 6" CLEARANCE BETWEEN THE BOTTOM OF THE PROPOSED 12 WATERLINE AND TOP OF GEOGRID. THE CONTRACTOR SHALL COORDINATE WITH BOTH THE C.P.U. AND COUNTY INSPECTOR AS NECESSARY TO CONFIRM THAT THE GEOGRID REINFORCEMENT FOR THE RETAINING WALLS DOES NOT EXTEND WITHIN THE TRENCH SECTION FOR THE NEWLY INSTALLED WATERMAIN.

2 GEOGRID DIMENSIONS SHOWN ARE APPROXIMATE. REFER TO GRID AND WALL DETAILS IN THE PLAN AND PROFILE SHEETS FOR WALL AND GRID DIMENSIONS.

WATERLINE PLACEMENT ABOVE GEOGRID
STA. 102+40 TO 103+05
N.T.S.

EXISTING PROJECT WATER SERVICES:

STATION	CONSTRUCTION ACTION
91+33 LT.	NO ACTION REQUIRED
91+34 LT.	NO ACTION REQUIRED
93+06 RT.	RELOCATE–SEE THIS SHEET
116+00 LT. (2 METERS)	NO ACTION REQUIRED
116+01 RT.	NO ACTION REQUIRED
125+22 LT.	NO ACTION REQUIRED
125+18 RT.	SEE SHEET PP8 (ADJUST TO GRADE)

SCALE IN FEET
20 0 20 40

APPROVED FOR CONSTRUCTION
CLARK PUBLIC UTILITIES - WATER
SIGNATURE RAAA DATE 2/25/04

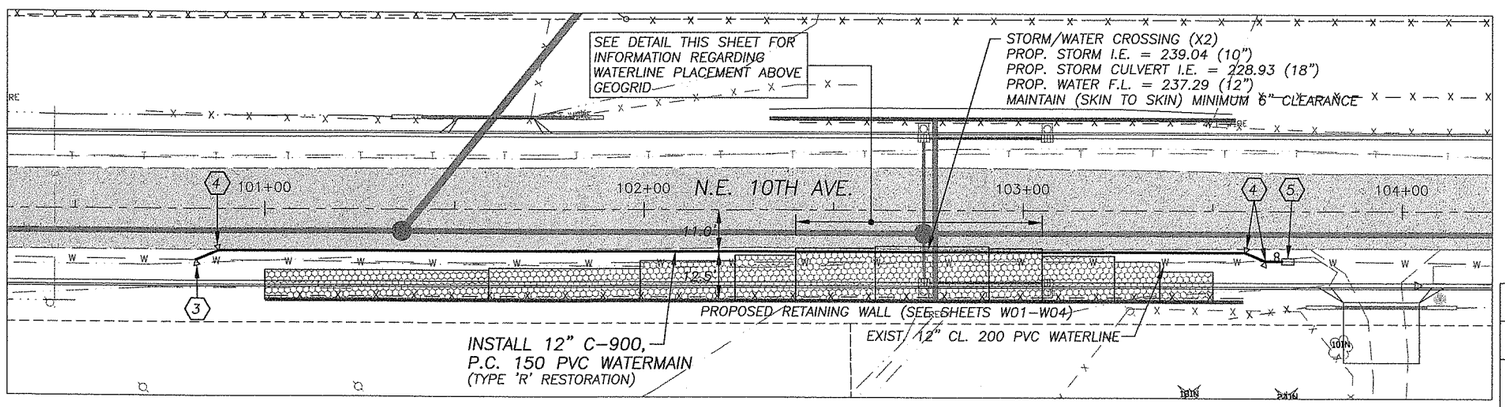

STA. 100+50 TO 103+75
SCALE: 1" = 20'

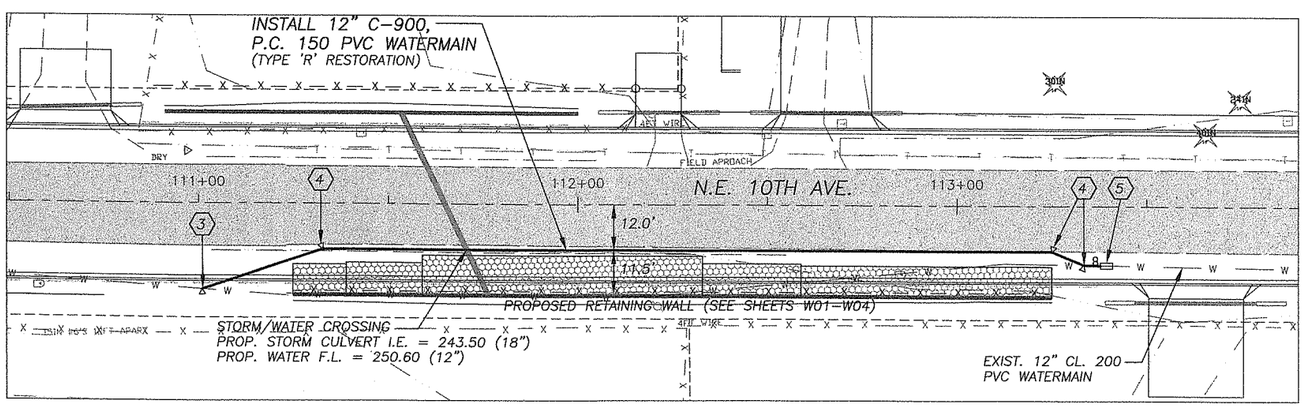

STA. 111+00 TO 113+50
SCALE: 1" = 20'

PROJECT CONSTRUCTION NOTES

APPROXIMATE LENGTH OF 12" C-900, P.C. 150, PVC PIPE = 530 LINEAL FEET +/–

NO. OF LOCATIONS (SEE * NOTE)	ASSEMBLY REFERENCE NUMBER (#) AND DESCRIPTION
1	(1) CONNECT TO EXIST. 12" WATERMAIN WITH: 1 – STD. FIRE HYDRANT ASSEMBLY W/ 12" X 6" S.S. TAPPING SLEEVE, FLG., AND 6" TAPPING G.V., FLG. X M.J. W/ M.L.R.G. (LOCATE HYDRANT AS DIRECTED BY THE INSPECTOR)
1	(2N) R 1 – 12" X 1" SERVICE CLAMP W/1" CORP. STOP (AS PER STD. WATER SERVICE). TRANSFER EXISTING WATER SERVICE LINE TO NEW TAP FOLLOWING TESTING AND ACCEPTANCE OF NEW MAIN. EXISTING WATER SERVICES OTHER THAN 1" P.E. CLASS 200 PIPE SHALL BE REPLACED AND NEW SERVICE EXTENDED TO METER. TRANSFER SERVICE AFTER SATISFACTORY TESTING. FOR FAR SIDE SERVICES THE CONTRACTOR SHALL BORE OR PUSH EACH 1" SERVICE LINE. EACH METER TO HAVE INDIVIDUAL SERVICE AS PER CPU STANDARD DETAIL. RELOCATE EXIST. METERS AS SHOWN, AND RE-CONNECT HOUSE SERVICE LINE. 2N (R) = NEAR SIDE SERVICE (RELOCATED METER)
2	(3) CUT EXIST. 12" CL. 200 PVC PIPE AND CONNECT WITH: 1 – 12", 22.5° C.I. BEND, M.J. W/ M.L.R.G. 1 – THRUST BLOCK COORDINATE SHUTDOWN WITH CLARK PUBLIC UTILITIES INSPECTOR.
6	(4) 1 – 12", 22.5° C.I. BEND, M.J. W/ M.L.R.G. 1 – THRUST BLOCK
2	(5) INSTALL TEMP. STD. PERPENDICULAR BLOW-OFF ASSEMBLY FOR TESTING, INCLUDING MAIN CAP AND TEMP. THRUST RESTRAINT. UPON SATISFACTORY TESTING AND ACCEPTANCE OF NEW WATERMAIN, CUT EXIST. 12" CL. 200 PIPE AND CONNECT WITH: 1 – 12" LONG PATTERN TRANSITION SLEEVE, M.J. (C-900 PVC/CL. 200 PVC) COORDINATE SHUTDOWN WITH CLARK PUBLIC UTILITIES INSPECTOR.

* NOTE: THE NO. OF LOCATIONS REFERS TO ONLY THE ITEMS IDENTIFIED WITH AND DOES NOT INCLUDE ITEMS CALLED OUT INDEPENDENTLY ON THE PLAN.

FOR ALL CROSSINGS:

VERIFY EXACT LOCATION AND ELEVATION PRIOR TO CONSTRUCTION. ANY CONFLICTS SHALL BE BROUGHT TO THE ATTENTION OF THE ENGINEER IMMEDIATELY.

MAINTAIN ALL MINIMUM CLEARANCES BETWEEN NEW WATERMAINS AND EXISTING UTILITIES AS IDENTIFIED IN THE PLANS, DESCRIBED IN THE GENERAL NOTES, AND REQUIRED BY THE STANDARD SPECIFICATIONS.

PLAN INDICATES MAINLINE CROSSINGS ONLY. CONTRACTOR TO VERIFY LOCATION OF LATERALS AS REQUIRED.

CONSTRUCTION SEQUENCE:

THE EXISTING WATERLINE SHALL BE CUT AND CAPPED WITH TEMP. THRUST RESTRAINT TO ALLOW CONSTRUCTION OF THE NEW RETAINING WALLS. COORDINATE SHUTDOWN WITH CLARK PUBLIC UTILITIES INSPECTOR SO AS TO MAINTAIN SERVICE TO EXISTING HOMES. COORDINATE NEW WATERMAIN INSTALLATION WITH RETAINING WALL CONSTRUCTION AS REQUIRED AND NECESSARY (SEE ALSO RETAINING WALL COORDINATION NOTE).

ABANDONMENT NOTE:

WHENEVER A PIPE IS CUT AND NOT RECONNECTED, THE CUT ENDS SHALL BE CAPPED OR PLUGGED, AS DIRECTED BY INSPECTOR. ALL VALVE BOX TOPS ASSOCIATED WITH THE ABANDONED LINE SHALL BE REMOVED AND FILLED WITH CDF. THIS IS INCIDENTAL TO THE CONTRACTED WORK AND SHALL BE A PART OF OVERALL CONTRACT PRICE.

A.C. PIPE NOTE:

CONTRACTOR SHALL SUPPLY WORKER WHO IS CERTIFIED TO WORK ON A.C. PIPE WHEN ANY A.C. PIPE IS ENCOUNTERED DURING THE PROJECT.

SHUTDOWN NOTE:

CONTRACTOR SHALL NOTIFY CLARK PUBLIC UTILITIES AND COORDINATE ALL CUSTOMER SHUTDOWNS PRIOR TO PERFORMING WORK.

DESIGNED	ALC
DRAWN	ALC/TLH
CRP	311522
HOR.	1"=20'
VERT.	N/A
DATE	2/27/04
DWG:	WP1
SHEET 46	OF 55

CALL 48 HOURS BEFORE YOU DIG 1-800-553-4344 It's the Law NORTHWEST UTILITY NOTIFICATION CENTER

AMERICAN CONSULTING ENGINEERS COUNCIL WASHINGTON STATE ENGINEERING PROFESSIONAL
EXPIRES: 09/31/05

Harper Houf Peterson Righellis Inc.
ENGINEERS • PLANNERS • SURVEYORS
1104 Main Street, Suite 100, Vancouver, WA 98660
TEL 360.750.1131 FAX 360.750.1141 www.hhpr.com

DESIGN & ENGINEERING DIVISION

NE 10TH AVENUE WATER PLAN

proud past, promising future
CLARK COUNTY WASHINGTON

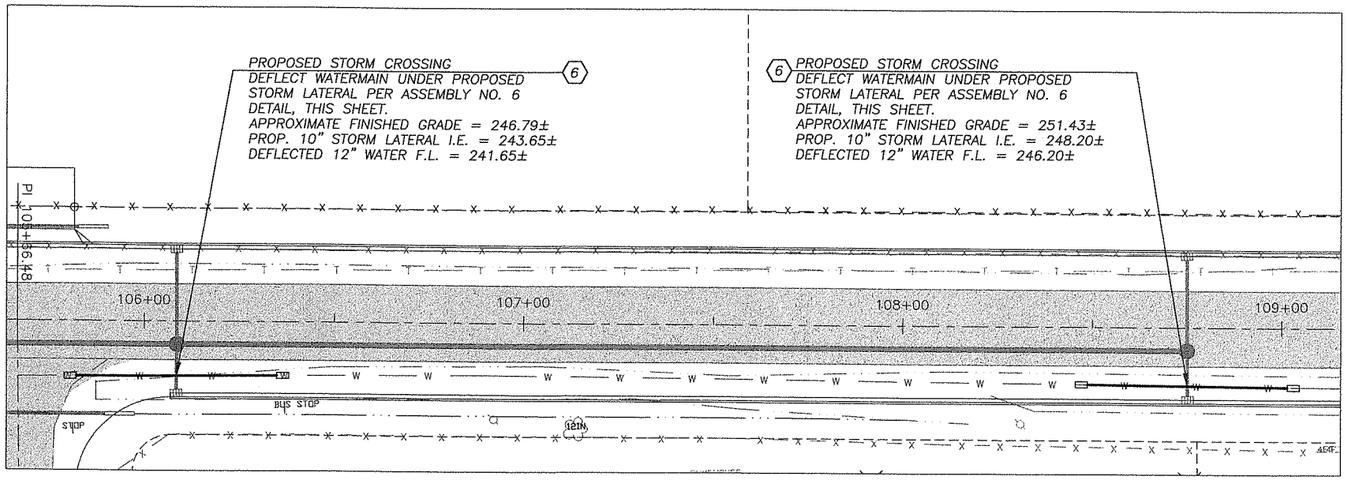

STA. 106+00 TO 109+00

SCALE: 1" = 20'

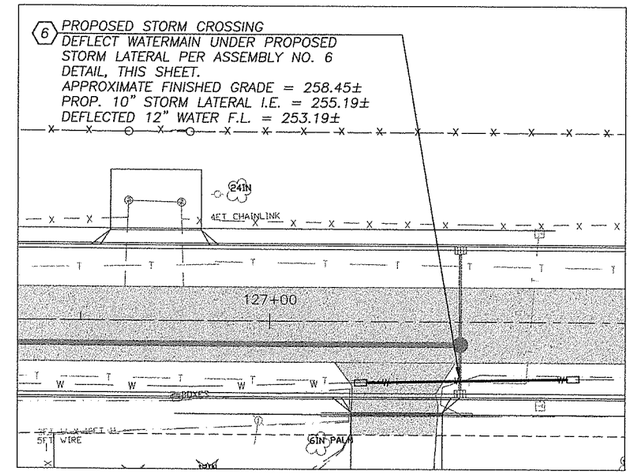

STA. 127+50

SCALE: 1" = 20'

SCALE IN FEET

20 0 20 40

LEGEND

	NEW WATER LINE
	NEW FIRE HYDRANT ASSEMBLY
	NEW WATER VALVE
	NEW THRUST BLOCK
8	TEMP. BLOWOFF ASSEMBLY
	NEW TRANSITION SLEEVE
	RELOCATED WATER METER
M.L.R.G.	MEGALUG RETAINER GLANDS
	RECONSTRUCTED SECTION (SEE PP1–PP4)
	NEW RETAINING WALL REINFORCEMENT GEOGRID

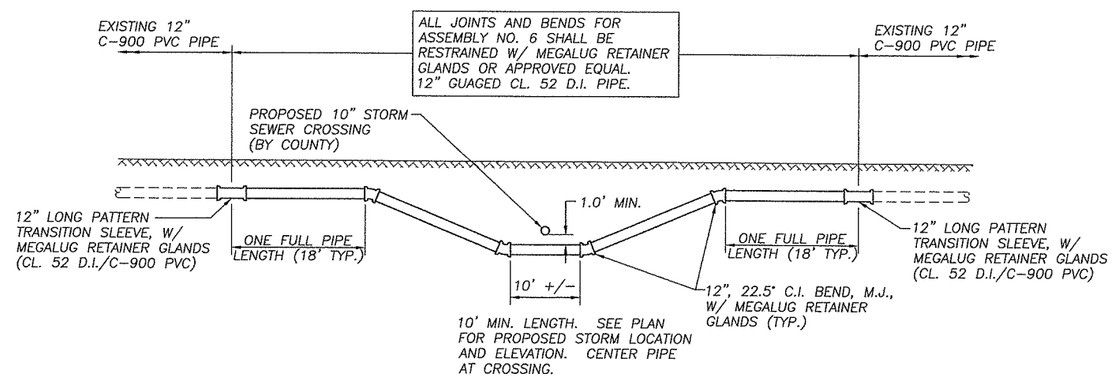

ASSEMBLY 6 DETAIL – CROSSING UNDER PROPOSED STORM

N.T.S.

APPROVED FOR CONSTRUCTION

CLARK PUBLIC UTILITIES - WATER

SIGNATURE _____ DATE 2/25/04

PROJECT CONSTRUCTION NOTES

NO. OF LOCATIONS (SEE * NOTE)	ASSEMBLY REFERENCE NUMBER (#) AND DESCRIPTION
3	(6) CUT EXIST. 12" C-900 PVC PIPE AND CONNECT WITH: 4 – 12", 22 1/2° C.I. VERTICAL BEND, M.J. W/ M.L.R.G. 2 – 12" LONG PATTERN TRANSITION SLEEVES, M.J. (C-900 PVC/CL. 52 D.I.) APPROX. 56 L.F. RESTRAINED, GAUGED CL. 52 D.I. PIPE. SEE ASSEMBLY NO. 6 DETAIL, THIS SHEET. COORDINATE SHUTDOWN W/ CLARK PUBLIC UTILITIES INSPECTOR.

* NOTE: THE NO. OF LOCATIONS REFERS TO ONLY THE ITEMS IDENTIFIED WITH AND DOES NOT INCLUDE ITEMS CALLED OUT INDEPENDENTLY ON THE PLAN.

DESIGNED	ALC
DRAWN	ALC/TLH
CRP	311522
HOR.	1"=20'
VERT.	N/A
DATE	2/27/04
DWG.	WP2
SHEET 47	OF 55

CALL 48 HOURS BEFORE YOU DIG 1-800-553-4344 "It's the Law" NORTHWEST UTILITIES NOTIFICATION CENTER

AMERICAN WESTERN COOPER STATE OF WASHINGTON 27577 REGISTERED PROFESSIONAL ENGINEER

EXPIRES: 09/11/04

Harper Houf Peterson Righellis Inc.
ENGINEERS • PLANNERS • LANDSCAPE ARCHITECTS
1104 Main Street, Suite 100, Vancouver, WA 98660
TEL 360.750.1131 www.hhpr.com FAX 360.750.1141

DESIGN & ENGINEERING DIVISION

NE 10TH AVENUE WATER PLAN

proud past, promising future

CLARK COUNTY WASHINGTON

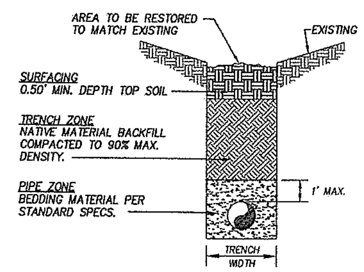

NATIVE BACKFILL -OUTSIDE ROADWAY PRISM-

(TYPE 'A' RESTORATION)

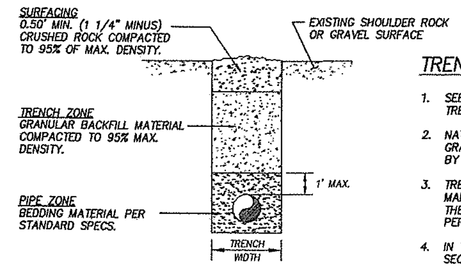

ROADWAY SHOULDERS, GRAVEL SURFACE

(TYPE 'B' RESTORATION)

TRENCHING NOTES:

1. SEE CLARK COUNTY UTILITY PERMIT FOR ADDITIONAL TRENCH BACKFILL AND SURFACING REQUIREMENTS.
2. NATIVE MATERIALS MAY BE SUBSTITUTED FOR IMPORTED GRANULAR MATERIAL PROVIDING IT IS PRE-APPROVED BY THE COUNTY ENGINEER OR AUTHORIZED REPRESENTATIVE.
3. TRENCH EXCAVATION, BEDDING, AND BACKFILL FOR WATER MAINS SHALL BE IN ACCORDANCE WITH SECTION 7-10 OF THE MOST CURRENT STANDARD SPECIFICATIONS. BED PIPE PER SECTION 7-10.3(9) OF THE STANDARD SPECIFICATIONS.
4. IN THE TRENCH ZONE, USE METHOD C COMPACTION PER SECTION 2-03.3(14).

TRENCH ZONE WIDTH
PIPE 8 IN. OR MORE = PIPE O.D. +2 FT.
PIPE 6 IN. OR LESS = PIPE O.D. +1 FT.
OR AS DIRECTED BY THE ENGINEER

TABLE APPLIES TO ALL TRENCH DETAILS ON THIS SHEET

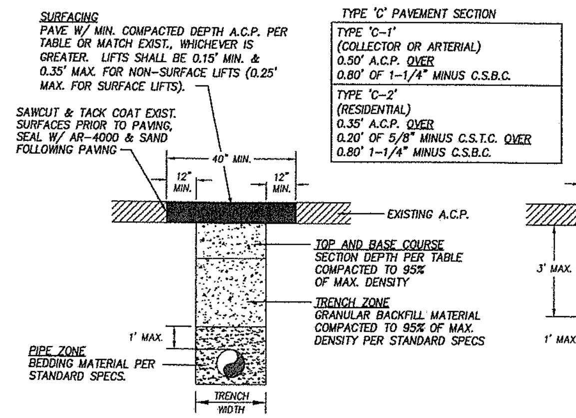

ASPHALT CONCRETE PAVEMENT

(TYPE 'C-1' & 'C-2' RESTORATION)

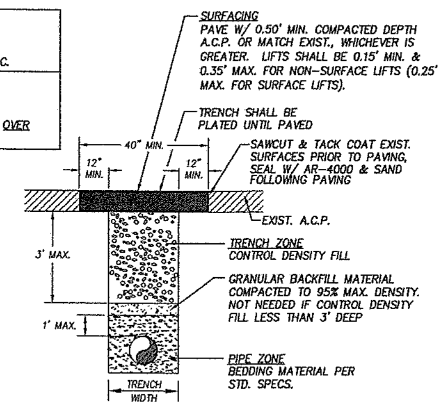

CONTROL DENSITY FILL -A.C.P.-

(TYPE 'D' RESTORATION)

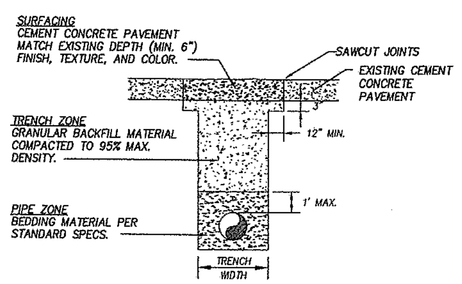

CEMENT CONCRETE PAVEMENT

(TYPE 'E' RESTORATION)

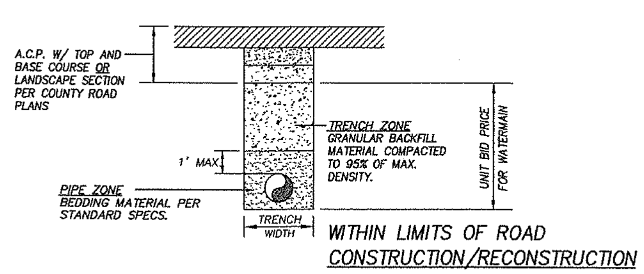

PIPE BEDDING AND BACKFILL

(TYPE 'R' RESTORATION, WITHIN LIMITS OF COUNTY ROAD PROJECT)

PIPE SIZE	HORIZ. FITTINGS (BENDS)	BEARING AREA (SF)	MINIMUM BLOCK SIZE (FT.)	VOL. OF BLOCKING (CF)	MINIMUM LENGTH OF BLOCKING (FT.-IN.)
4"	TEE	1.2	1.0' x 1.0'	0.3	0'-6"
	90°	1.7	1.5' x 1.5'	0.6	0'-6"
	45°	0.9	1.0' x 1.0'	0.3	0'-6"
	22-1/2°	0.5	1.0' x 1.0'	0.3	0'-6"
6"	TEE	2.4	1.5' x 1.5'	0.6	0'-6"
	90°	3.4	2.0' x 2.0'	1.4	0'-8"
	45°	1.9	1.5' x 1.5'	0.6	0'-6"
	22-1/2°	1.0	1.0' x 1.0'	0.3	0'-6"
	11-1/4°	0.5	1.0' x 1.0'	0.3	0'-6"
8"	TEE	4.0	2.0' x 2.0'	1.5	0'-8"
	90°	5.6	2.5' x 2.5'	2.8	0'-10"
	45°	3.1	2.0' x 2.0'	1.5	0'-8"
	22-1/2°	1.6	1.5' x 1.5'	0.7	0'-6"
	11-1/4°	0.8	1.0' x 1.0'	0.3	0'-6"
10"	TEE	6.2	2.5' x 2.5'	3.0	0'-10"
	90°	8.7	3.0' x 3.0'	4.5	1'-0"
	45°	4.8	2.5' x 2.5'	2.5	0'-8"
	22-1/2°	2.5	2.0' x 2.0'	1.4	0'-6"
	11-1/4°	1.3	1.5' x 1.5'	0.8	0'-6"
12"	TEE	8.6	3.0' x 3.0'	5.0	1'-0"
	90°	12.2	3.5' x 3.5'	7.8	1'-3"
	45°	6.6	2.5' x 2.5'	3.0	0'-9"
	22-1/2°	3.4	2.0' x 2.0'	1.5	0'-6"
	11-1/4°	1.7	1.5' x 1.5'	0.8	0'-6"
16"	TEE	15.2	4.0' x 4.0'	12	1'-3"
	90°	21.4	4.5' x 4.5'	17	1'-6"
	45°	11.6	3.5' x 3.5'	7.5	1'-0"
	22-1/2°	5.9	2.5' x 2.5'	2.7	0'-6"
	11-1/4°	3.0	2.0' x 2.0'	1.7	0'-6"
18"	TEE	19.1	4.0' x 4.0'	12	1'-3"
	90°	27.1	5.0' x 5.0'	23	1'-9"
	45°	14.7	4.0' x 4.0'	12	1'-2"
	22-1/2°	7.5	3.0' x 3.0'	4.7	0'-8"
	11-1/4°	3.8	2.0' x 2.0'	1.9	0'-6"
SOIL BEARING = 2000 LB/FT					11/98

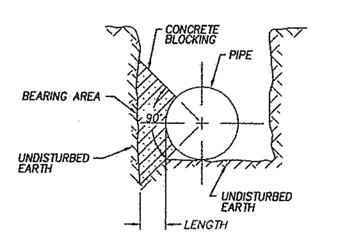

STANDARD THRUST BLOCK

THRUST BLOCK NOTES:

1. POURED BLOCKING SHALL BE POURED IN PLACE WITHOUT DIRECT CONTACT TO THE PIPE OR FITTINGS SOME PROTECTIVE MATERIAL SUCH AS PLASTIC SHALL BE PLACED BETWEEN THE CONCRETE AND PIPE OR FITTING.
2. POURED BLOCKING SHALL BE POURED AGAINST FIRM UNDISTURBED SOIL.
3. CONCRETE FOR ALL BLOCKING SHALL HAVE A 28-DAY MINIMUM COMPRESSIVE STRENGTH OF 2,500 P.S.I.
4. CONCRETE BLOCKING FOR VERTICAL BENDS SHALL BE PER APWA STD. PLAN NO. B-22.
5. LAYOUT TO BE APPROVED BY THE INSPECTOR PRIOR TO AND AFTER CONCRETE POUR.

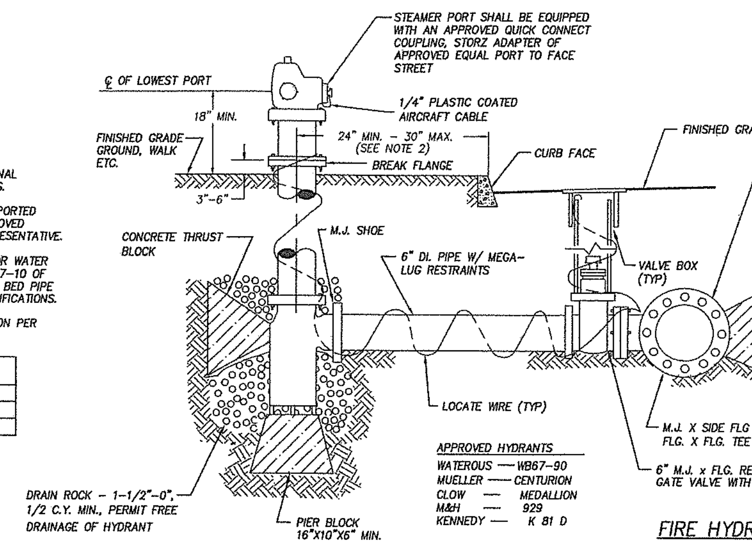

STANDARD FIRE HYDRANT ASSEMBLY

FIRE HYDRANT NOTES:

1. FIRE HYDRANT INSTALLATIONS SHALL BE INSPECTED PRIOR TO BACKFILLING.
2. WHERE HYDRANTS SET BEHIND SIDEWALK, DISTANCE FROM BACK OF SIDEWALK TO HYDRANT C SHALL BE 18" MIN., 24" MAX.
3. FIRE HYDRANTS SHALL BE SHOP PAINTED PRIOR TO INSTALLATION W/ STANDARD A.W.W.A., GLOSS B, YELLOW

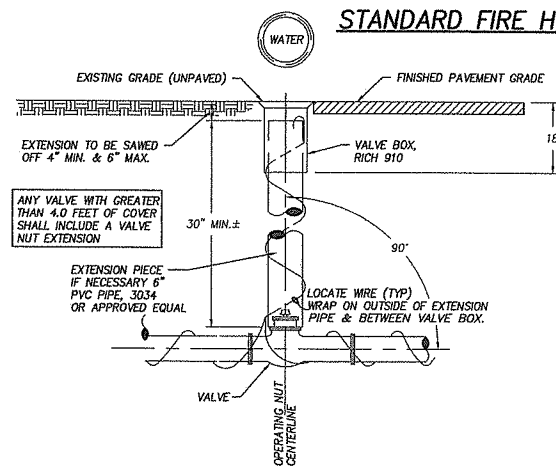

STANDARD VALVE BOX

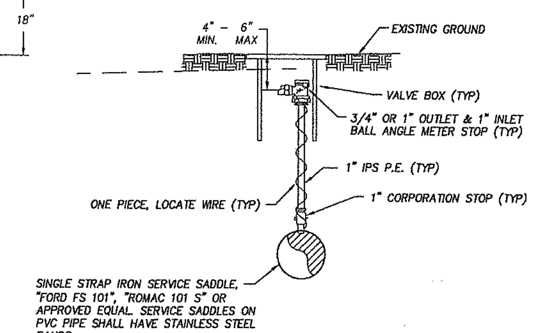

STANDARD MANUAL AIR RELEASE VALVE

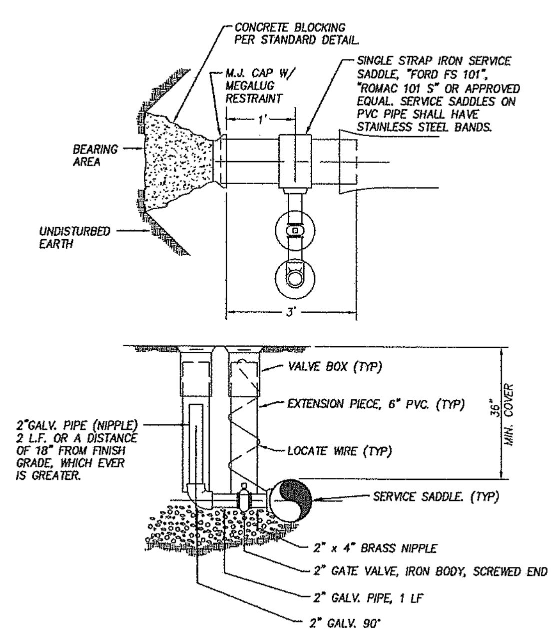

STANDARD BLOW-OFF ASSEMBLY (PERMANENT)

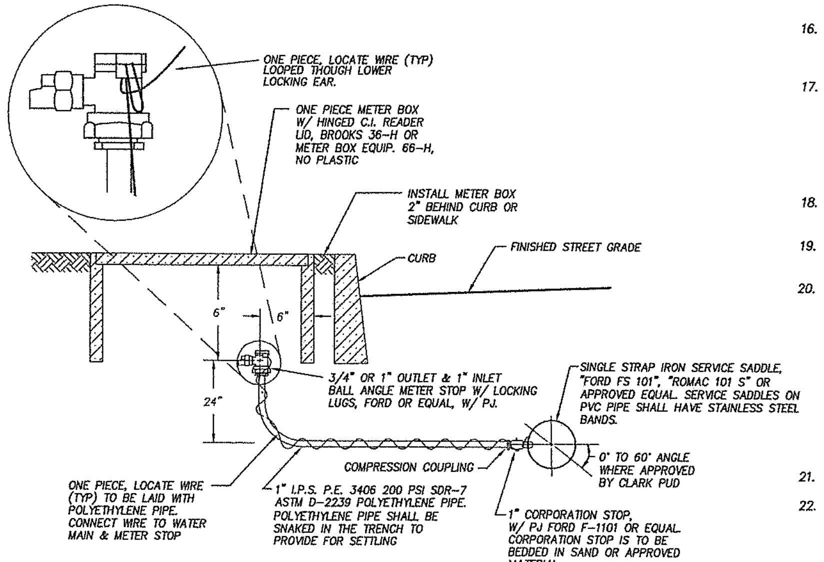

WATER SERVICE & MANUAL AIR RELEASE NOTES:

1. NO CONNECTIONS WILL BE ALLOWED TO AN EXISTING SERVICE PRIOR TO AN APPROVED PURITY TEST. PURITY TEST SHALL PRECEDE PRESSURE TEST.
2. STUB SERVICES SHALL BE PRESSURE TESTED WITH THE MAIN LINE AND BE CAPABLE OF WITH-STANDING THE MAINS TEST PRESSURE.
3. ALL COMPRESSION FITTINGS TO HAVE STAINLESS STEEL INSERTS.

GENERAL NOTES:

1. ALL CONSTRUCTION MATERIALS AND WORKMANSHIP SHALL CONFORM TO THE CLARK PUBLIC UTILITIES (CPU) WATER CONSTRUCTION SPECIFICATIONS, STANDARD DETAILS, AND THE 2000 EDITION OF THE "STANDARD SPECIFICATIONS FOR ROAD AND BRIDGE CONSTRUCTION" PUBLISHED BY WASHINGTON STATE DEPARTMENT OF TRANSPORTATION (WSDOT).
2. A WATER UTILITY INSPECTOR SHALL BE AT THE JOB SITE DURING CONSTRUCTION OF ALL WATER FACILITIES. CONTACT 992-8019 TWO WORKING DAYS PRIOR TO COMMENCING WORK. WORK WITHIN COUNTY RIGHT-OF-WAY SHALL CONFORM WITH CLARK COUNTY PUBLIC WORKS UTILITY PERMIT REQUIREMENTS AND DETAILS.
3. WORK WITHIN STATE RIGHT-OF-WAY SHALL CONFORM TO WSDOT UTILITY PERMIT REQUIREMENTS AND DETAILS.
4. WATER MAIN SHALL BE PVC C-900, P.C. 150 OR AS SPECIFIED ON PLANS.
5. INSTALL WATERMAIN WITH 3.0 FEET OF MINIMUM COVER UNLESS OTHERWISE NOTED. DEPTH MAY INCREASE AT UTILITY AND CULVERT CROSSINGS. (REFER TO NOTE 12)
6. THE LOCATION OF THE UTILITIES SHALL BE VERIFIED IN ADVANCE TO ALLOW FOR ALIGNMENT ADJUSTMENTS. CALL UTILITY LOCATES TWO(2) WORKING DAYS PRIOR TO CONSTRUCTION (1-800-553-4344).
7. A TAPPING COMPANY APPROVED BY CLARK PUBLIC UTILITIES SHALL BE USED TO MAKE ALL TAPS.
8. LOCATE WIRE SHALL BE NON-COATED, NO. 14 GA. SOFT DRAWN SOLID COPPER.
9. DRY CALCIUM HYPO CHLORIDE IN TABLET FORM, FAST DISSOLVING, WITH 65% MIN. AVAILABLE CHLORINE SHALL BE USED TO CHLORINATE ALL NEW MAINS. THE NUMBER OF TABLETS TO BE APPLIED PER 20 FOOT LENGTH OF PIPE SHALL BE AS FOLLOWS:

PIPE SIZE	NUMBER OF TABLETS
4"	2
6"	3
8"	4
10"	6
12"	8

10. ACTUAL ROAD ALIGNMENTS MAY VARY FROM RIGHT-OF-WAY INDICATED. THE CONTRACTOR SHALL VERIFY THE PROPOSED PIPE ALIGNMENT AND REPORT DIFFERENCES TO THE INSPECTOR. ALL ALIGNMENT CHANGES MUST BE APPROVED BY THE INSPECTOR PRIOR TO INSTALLATION.
11. DRIVEWAYS DISTURBED BY CONSTRUCTION SHALL BE RESTORED BY THE CONTRACTOR TO "LIKE" OR BETTER CONDITION. REFER TO PLAN FOR APPROXIMATE LOCATIONS AND TYPES.
12. CONTRACTOR SHALL VERIFY EXISTING UTILITY CULVERTS, CONDUITS AND LINE LOCATION PRIOR TO CONSTRUCTION. DUE TO FIELD CONDITIONS, THE CONTRACTOR SHALL FIELD ADJUST THE VERTICAL AND HORIZONTAL ALIGNMENT OF THE WATER MAIN TO CLEAR THE UTILITY IN CONFLICT AND PROVIDE THE MIN. 3.0 FEET OF COVER AS APPROVED BY THE INSPECTOR. ALL CULVERTS WHICH ARE DISTURBED BY CONSTRUCTION SHALL BE RESTORED BY THE CONTRACTOR IN ACCORDANCE WITH THE SPECIFICATIONS.
13. FENCES DISTURBED BY CONSTRUCTION SHALL BE RESTORED BY THE CONTRACTOR TO "LIKE" OR BETTER CONDITION.
14. CONTRACTOR SHALL VERIFY EXISTING SIGN AND MAILBOX LOCATIONS PRIOR TO CONSTRUCTION. SIGNS & MAILBOXES THAT ARE DISTURBED BY CONSTRUCTION SHALL BE RELOCATED BACK FROM EDGE OF PAVEMENT, 1.0 FEET CLEAR OF WATERMAIN. ANY SIGNS OR MAILBOXES DAMAGED SHALL BE REPAIRED OR REPLACED AS PER THE SPECIFICATIONS.
15. ALL WATER SERVICES, BLOW-OFF ASSEMBLIES, AIR RELEASE VALVES, FIRE HYDRANT ASSEMBLIES, VALVE BOXES, AND THRUST BLOCKING SHALL BE INSTALLED AS PER THE STANDARD SPECIFICATIONS AND DETAILS.
16. THE EXACT LOCATION OF ALL POLES HAVE NOT BEEN INDICATED. ONLY THOSE POLES THAT MAY BE IN CONFLICT WITH THE WATERMAIN ALIGNMENT HAVE BEEN INDICATED. SHIFT WATERMAIN TO AVOID CONFLICT WITH POLE.
17. THE LOCATIONS OF ALL EXISTING UTILITIES ARE FOR INFORMATIONAL PURPOSES ONLY. MANY LOCATIONS ARE AS PER SCHEMATIC RECORD DRAWINGS. THE PLANS INDICATE ONLY TELEPHONE AND POWER. UTILITY SERVICE CROSSINGS HAVE NOT BEEN IDENTIFIED. THE CURRENT AND EXACT LOCATIONS OF FACILITIES MUST BE VERIFIED PRIOR TO CONSTRUCTION. THE CONTRACTOR PERFORMING THE WORK SHALL COMPLY WITH THE PROVISIONS OF CHAPTER 19.122 RCW, INCLUDING NOTIFICATION OF ALL OWNERS OF UNDERGROUND FACILITIES AT LEAST 48 BUSINESS DAY HOURS PRIOR TO EXCAVATION. CALL 696-4848 FOR UTILITY LOCATE SERVICE.
18. WATERMAINS BEING INSTALLED NEAR TELEPHONE/CABLE COMMUNICATIONS SHALL HAVE A MINIMUM 12" HORIZONTAL AND 6" VERTICAL CLEARANCE.
19. WATERMAINS BEING INSTALLED NEAR UNDERGROUND POWER LINES SHALL HAVE A MINIMUM 12" HORIZONTAL AND 6" VERTICAL CLEARANCE.
20. REQUIRED SEPARATION BETWEEN WATER LINES AND SANITARY SEWER LINES SHALL BE AS FOLLOWS:

    HORIZONTAL SEPARATION (PARALLEL)
    A MINIMUM HORIZONTAL SEPARATION OF TEN (10) FEET (MEASURED EDGE TO EDGE) BETWEEN SANITARY SEWER LINES AND WATER LINES SHALL BE MAINTAINED WHENEVER POSSIBLE. WHEN CONDITIONS PREVENT THE MINIMUM TEN (10) FOOT HORIZONTAL SEPARATION, THE ENGINEER SHALL BE NOTIFIED.

    VERTICAL SEPARATION (PERPENDICULAR)
    WATER LINES CROSSING SANITARY SEWER LINES SHALL BE LAID ABOVE THE SEWER LINES TO PROVIDE A SEPARATION OF AT LEAST 18 INCHES BETWEEN THE INVERT OF THE WATER PIPE AND THE CROWN OF THE SANITARY SEWER PIPE. A LENGTH OF WATER PIPE SHALL BE CENTERED AT THE POINT OF CROSSING AND SHALL BE THE LONGEST STANDARD LENGTH AVAILABLE FROM THE MANUFACTURER.
21. VALVE SHALL BE 2" SQUARE OPERATING NUT OR AS SPECIFIED ON PLANS.
22. WHENEVER A PIPE IS CUT AND NOT RECONNECTED, THE CUT ENDS SHALL BE CAPPED OR PLUGGED, AS DIRECTED BY THE CPU INSPECTOR.

EROSION CONTROL NOTES:

1. ALL EXPOSED SOILS SHALL BE STABILIZED, IN A TIMELY MANNER, BY THE APPLICATION OF BEST MANAGEMENT PRACTICES, INCLUDING BUT NOT LIMITED TO SOD, SEED, OR OTHER VEGETATION, PLASTIC COVERING, MULCHING, OR APPLICATION OF CRUSHED AGGREGATE ON THOSE AREAS TO BE PAVED.
2. WHEN EXCAVATION OCCURS IN ROADSIDE DITCHES, EXCAVATE AND KEY INTO DITCH ONE STRAW BALE PER 100' OF DITCH, OR WHERE NOTED ON THE PLANS. REMOVE SILT WHEN IT IS EVEN WITH THE TOP OF THE BALE. REPLACE OR ADD BALES AS NECESSARY TO PROPERLY FILTER THE STORM WATER.
3. INSTALL BIOFILTER BAGS (POLYESTER FABRIC PILLOW (ASTM-D191 OR EQUAL) FILLED W/ 15-16 LBS. OF WOOD CHIPS) AT EACH INLET. REMOVE SILT AND ADD BIOFILTER BAGS AS NECESSARY TO PROPERLY FILTER THE STORM WATER.
4. IF SEDIMENT IS TRANSPORTED ONTO THE ROAD SURFACE, THE ROADS SHALL BE CLEANED THOROUGHLY AT THE END OF THE WORKDAY, OR MORE IF NECESSARY. SIGNIFICANT SOIL DEPOSITS SHALL BE REMOVED FROM THE ROAD BY SHOVELING OR SWEEPING.
5. THE LENGTH OF TRENCH OPEN AT ONE TIME SHALL BE MINIMIZED AND WHERE CONSISTENT WITH SAFETY AND SPACE CONSIDERATIONS, EXCAVATED MATERIALS SHALL BE PLACED ON THE UPHILL SIDE OF THE TRENCH.

DESIGNED	ALC
DRAWN	ALC/TLH
CRP	311522
HOR.	N.T.S.
VERT.	N/A
DATE	2/27/04
DWG:	WP3
SHEET	48 OF 55

CALL 48 HOURS BEFORE YOU DIG
1-800-553-4344
"It's the Law"
NORTHWEST UTILITIES NOTIFICATION CENTER

ANTHONY L. COOPER
STATE OF WASHINGTON
97577
REGISTERED PROFESSIONAL ENGINEER
EXPIRES: 08/11/05

Harper Houf Peterson Righellis Inc.
ENGINEERS • PLANNERS • SURVEYORS
1104 MAIN STREET, SUITE 100, VANCOUVER, WA 98660
TEL 360.750.1131 www.hhpr.com FAX 360.750.1141

DESIGN & ENGINEERING DIVISION

NE 10TH AVENUE
WATER DETAIL SHEET

CLARK COUNTY WASHINGTON
proud past, promising future

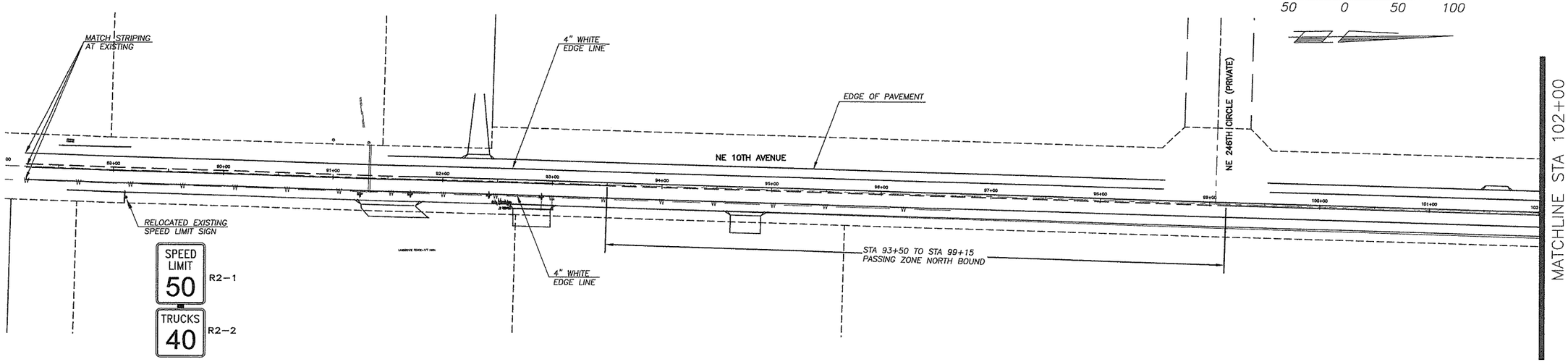

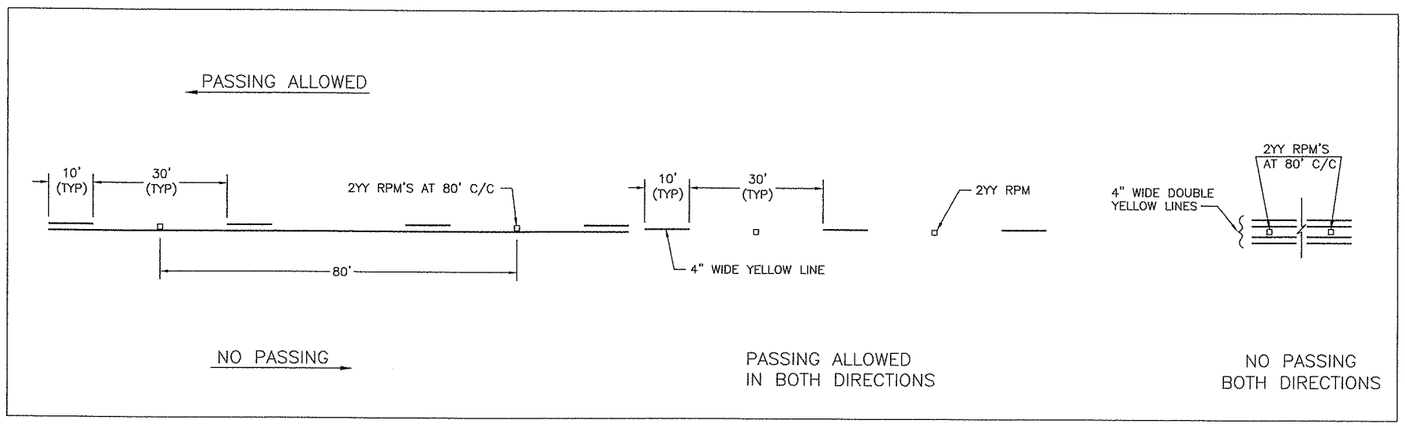

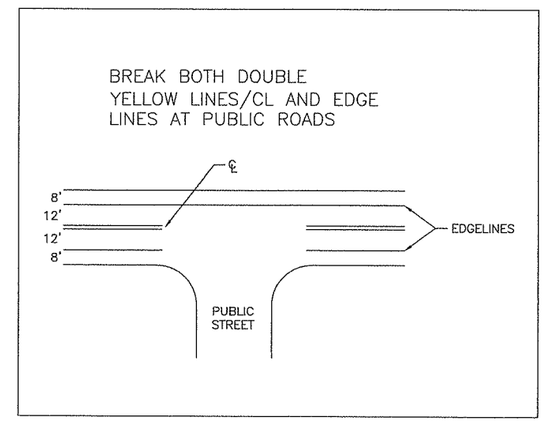

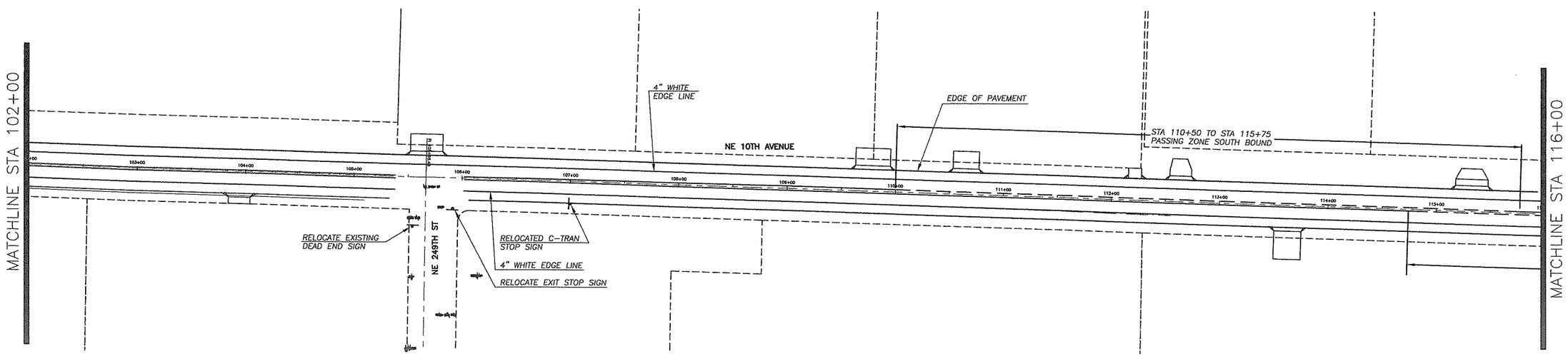

DESIGNED	EK
DRAWN	RK
CRP	311522
HOR.	50
VERT.	NA
DATE	3/05/04
DWG:	SS1
SHEET 49	OF 55

CALL 48 HOURS BEFORE YOU DIG 1-800-553-4344 "It's the Law" NORTHWEST UTILITIES NOTIFICATION CENTER

STATE OF WASHINGTON ELAZ KEHAT 36528 REGISTERED PROFESSIONAL ENGINEER 03/11/04 EXPIRES JAN. 01, 2006

DESIGN & ENGINEERING DIVISION
DESIGN SECTION

NE 10TH AVENUE
SIGNING AND STRIPING PLAN

proud past, promising future
CLARK COUNTY WASHINGTON

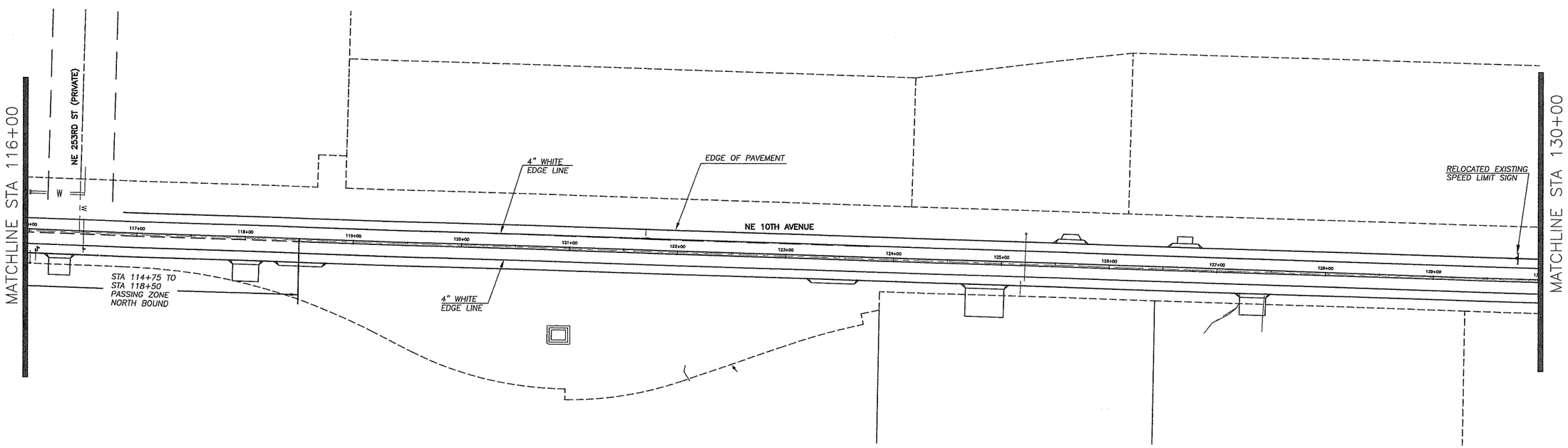

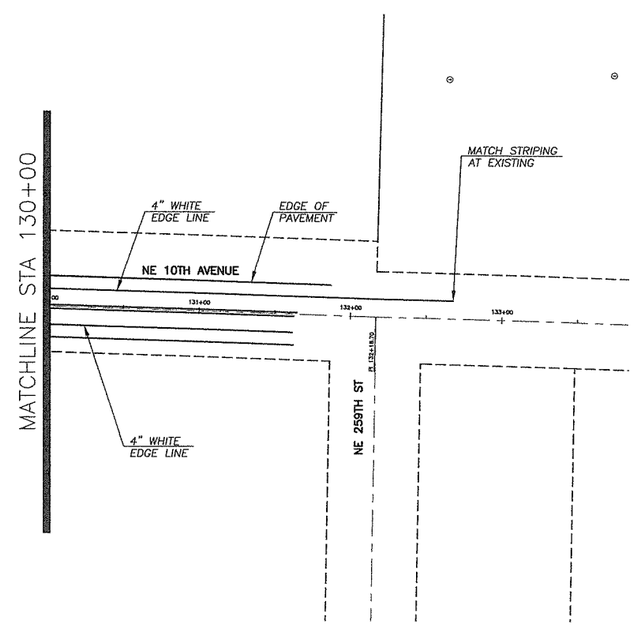

NOTES:

1. The striping and pavement marking removal process shall conform to 2002 WSDOT "Standard Specifications for Road, Bridge and Municipal Construction" section 8-22.3(6). The County's accepted practice of removal of existing painted pavement marking is by shot blasting. All other markings are removed by grinding. The contractor shall have a written approval by the engineer for any other method of removal.

2. The contractor shall maintain existing permanent signing in accordance with 2002 WSDOT "Standard Specifications for Road, Bridge and Municipal Construction" section 1-07.23(1).

3. The contractor shall provide temporary pavement markings in accordance with 2002 WSDOT "Standard Specifications for Road, Bridge and Municipal Construction" section 8.23.

4. All new signing, striping and pavement markings, including relocation of existing signs to the final location, will be performed by Clark County Public Works and reimbursed by the applicant for the services rendered.

5. Relocate existing public and private street name signs as necessary.

DESIGNED	EK
DRAWN	RK
CRP	311522
HOR.	50
VERT.	NA
DATE	3/05/04
DWG:	SS2
SHEET 50	OF 55

CALL 48 HOURS BEFORE YOU DIG
1-800-553-4344
"It's the Law"
NORTHWEST UTILITIES NOTIFICATION CENTER

STATE OF WASHINGTON
EKAM KHAN
REGISTERED PROFESSIONAL ENGINEER
03/11/04
EXPIRES JAN. 01, 2006

DESIGN & ENGINEERING DIVISION
DESIGN SECTION

NE 10TH AVENUE
SIGNING AND STRIPING PLAN

proud past, promising future
CLARK COUNTY
WASHINGTON

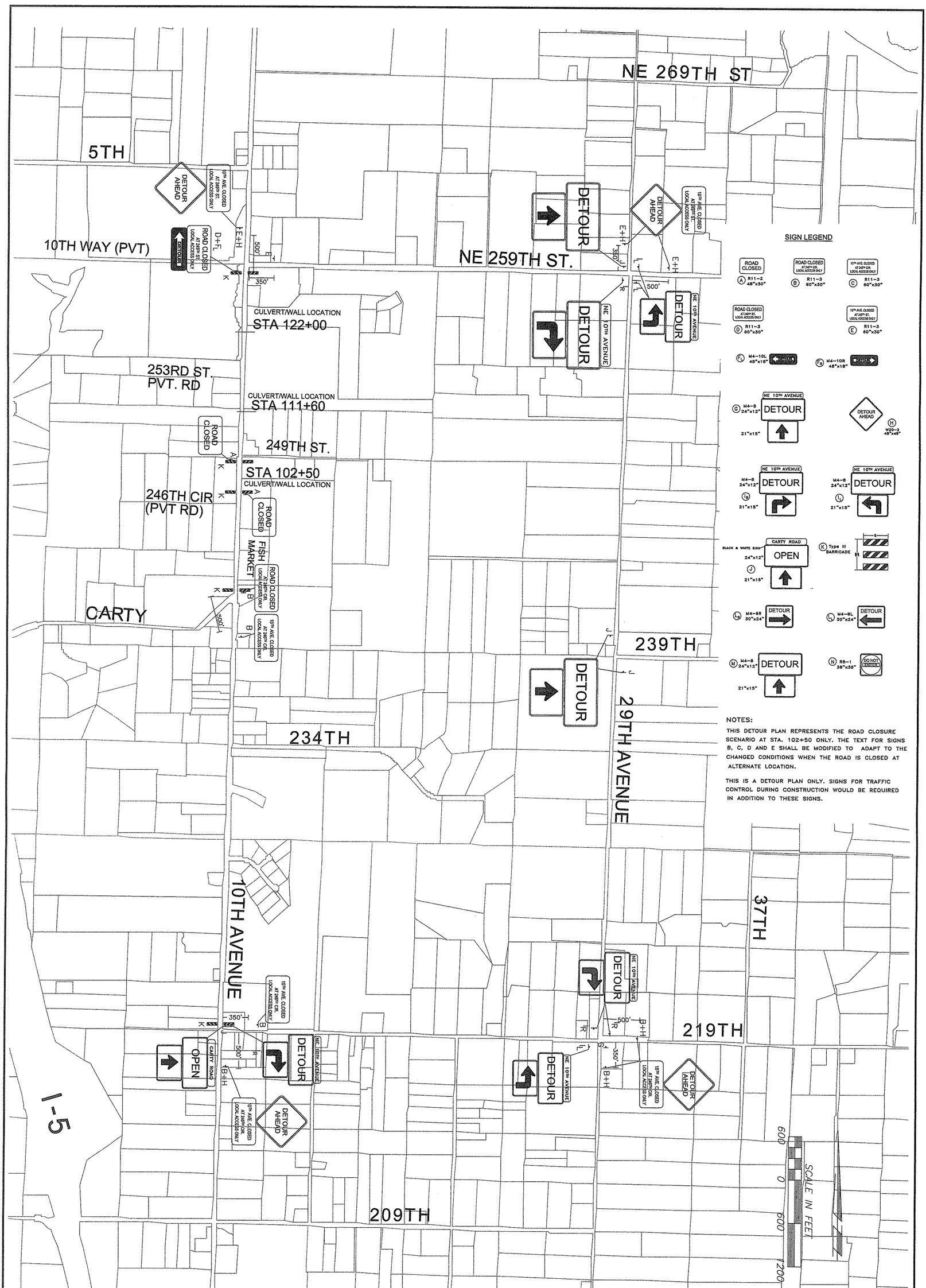

proud past, promising future

CLARK COUNTY
WASHINGTON

DESIGN & ENGINEERING DIVISION
DESIGN SECTION

NE 10TH AVENUE
DETOUR PLAN

EXPIRES JAN. 01, 2005

CALL 48 HOURS BEFORE YOU DIG
1-800-553-4344
"It's the Law"
NORTHWEST UTILITIES NOTIFICATION CENTER

DESIGNED	EK
DRAWN	KB
CRP	311522
HOR.	600
VERT.	NA
DATE	3/05/04
DWG:	10THDETOUR
SHEET	51 OF 55

PLANT LEGEND – LS01

TREES

ABBR.	QTY.	SYMBOL	BOTANICAL /COMMON NAME	SIZE	CONDITION	SPACING
ACCI	21		Acer circinatum / vine maple	5 GAL.	CONTAINER	AS SHOWN
ACMA	20		Acer macrophyllum / big-leaf maple	10 GAL.	CONTAINER	AS SHOWN
ALRU	21		Alnus rubra / red alder	5 GAL.	CONTAINER	AS SHOWN
FRLA	13		Fraxinus latifolia / Oregon ash	10 GAL.	CONTAINER	AS SHOWN
SASC	27		Salix scouleriana / Scouler's willow	LIVE STAKES	3 STAKES / LOCATION	
PSME	8		Pseudotsuga menziesii / Douglas fir	4–6'	B&B	AS SHOWN
THPL	5		Thuja plicata / Western red cedar	4–6'	B&B	AS SHOWN

SHRUBS

ABBR.	QTY.	SYMBOL	BOTANICAL /COMMON NAME	SIZE	CONDITION	SPACING
COSE	142		Cornus sericea / redosier dogwood	1 GAL.	CONTAINER	AS SHOWN
COCO	12		Corylus cornuta / beaked hazelnut	5 GAL.	CONTAINER	AS SHOWN
MAAQ	482		Mahonia aquifolium / Oregon grape	1 GAL.	CONTAINER	36" O.C.
OECE	13		Oemleria cerasiformis / Indian plum	5 GAL.	CONTAINER	AS SHOWN
PHCA	27		Physocarpos capitatus / ninebark	2 GAL.	CONTAINER	AS SHOWN
POMU	777		Polystichum munitum / Western sword fern	1 GAL.	CONTAINER	24" O.C.
ROGY	299		Rosa gymnocarpa / bald-hip rose	1 GAL.	CONTAINER	36" O.C.
RONU	43		Rosa nutkana / Nootka rose	1 GAL.	CONTAINER	AS SHOWN
SARA	23		Sambucus racemosa / red elderberry	5 GAL.	CONTAINER	AS SHOWN
SYAL	47		Symphoricarpos albus / snowberry	1 GAL.	CONTAINER	AS SHOWN

EMERGENT / GRASS SEED MIXES

ABBR.	QTY.	SYMBOL	BOTANICAL /COMMON NAME	APPLICATION RATE	CONDITION
Emergent Seed Mix – Wetland 'F'					
CAOB	7450 S.F.		Carex obnupta / slough sedge	SEE SPECIFICATIONS FOR SEED MIX AND APPLICATION RATE	PLS
CAST			Carex stipata / sawbeak sedge		
CAUN			Carex unilateralis / one-sided sedge		
JUEF			Juncus effusus / soft rush		
JUEN			Juncus tenuis / slender rush		
SCAC			Scirpus acutus / hard-stem bulrush		
Mitigation Seed Mix – Wetland 'F'					
GLGR	1 lbs.		Glyceria grandis / reed mannagrass	30 LB./ACRE	PLS
FERU	1 lbs.		Festuca r. var. rubra / native red fescue	30 LB./ACRE	
Permanent Erosion Control Mix for disturbed areas					
ELGL	as needed		Elymus glaucus / blue wildrye	48 LB./ACRE	PLS
FERU			Festuca r. var. rubra / native red fescue	12 LB./ACRE	

NOTE:
SEE SHEET LS03 FOR PLANTING DETAILS AND GENERAL PLANTING NOTES.

PROTECT ALL TREES TO THE GREATEST EXTENT PRACTICABLE, BUT EXISTING TREES WITHIN DISTURBED AREAS SHALL BE LEFT STANDING REGARDLESS OF DAMAGE TO ROOTS OR FOLIAGE.

VIGIL AGRIMIS, INC.
Engineering, Landscape Architecture, Environmental Science
819 SE Morrison Street, Ste. 310
Portland, Oregon
97214
503.274.2010
fax: 503.274.2024
www.vigil-agrimis.com

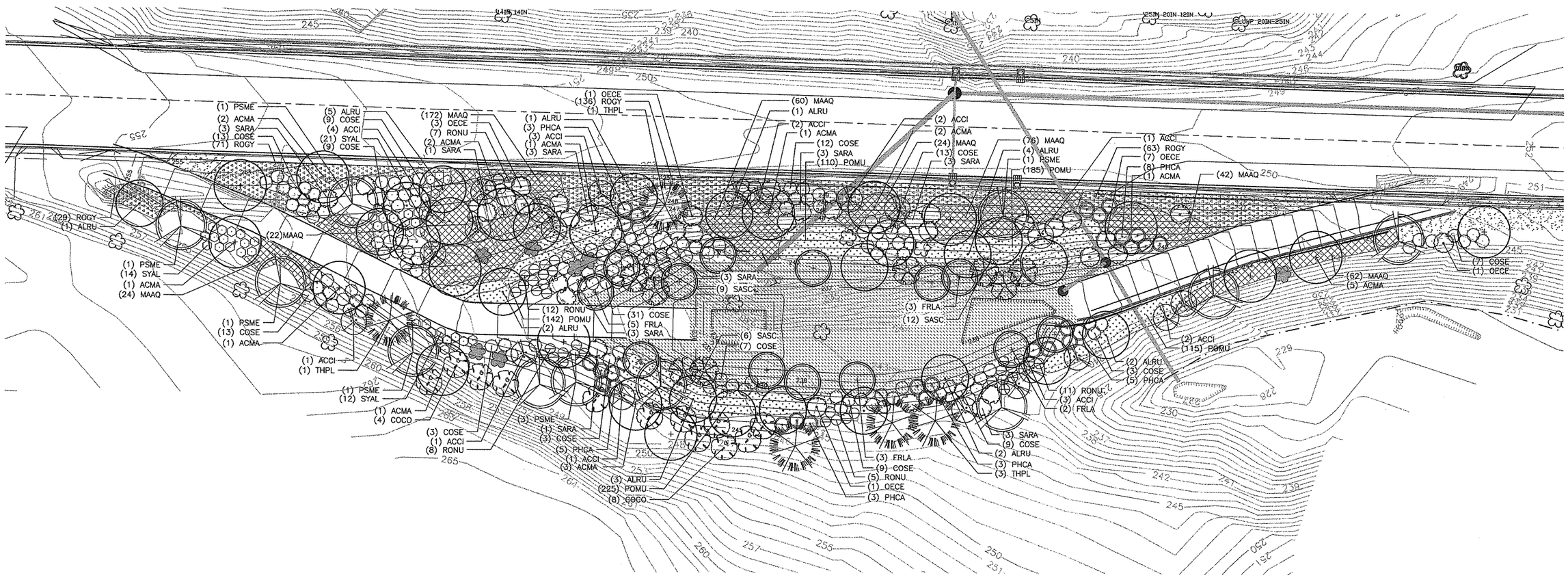

WETLAND 'F' PLANTING PLAN

SCALE: 1" = 20'

0 10 20 40 80

DESIGNED PDA
DRAWN TLJ
CRP CLARK003
HOR. 1"=20'
VERT.
DATE 3/16/2004
DWG: LS01
SHEET 52 OF 55

CALL 48 HOURS BEFORE YOU DIG
1-800-553-4344
"It's the Law"
NORTHWEST UTILITIES NOTIFICATION CENTER

STATE OF WASHINGTON REGISTERED LANDSCAPE ARCHITECT
PAUL DAVID AGRIMIS
CERTIFICATE NO. 640

DESIGN & ENGINEERING DIVISION
DESIGN SECTION

NE 10TH AVENUE
WETLAND 'F' MITIGATION PLANTING PLAN

proud past, promising future
CLARK COUNTY WASHINGTON

VIGIL AGRIMIS, INC.
Engineering, Landscape Architecture, Environmental Science
819 SE Morrison Street, Ste. 310
Portland, Oregon
97214
503.274.2010
fax: 503.274.2024
www.vigil-agrimis.com

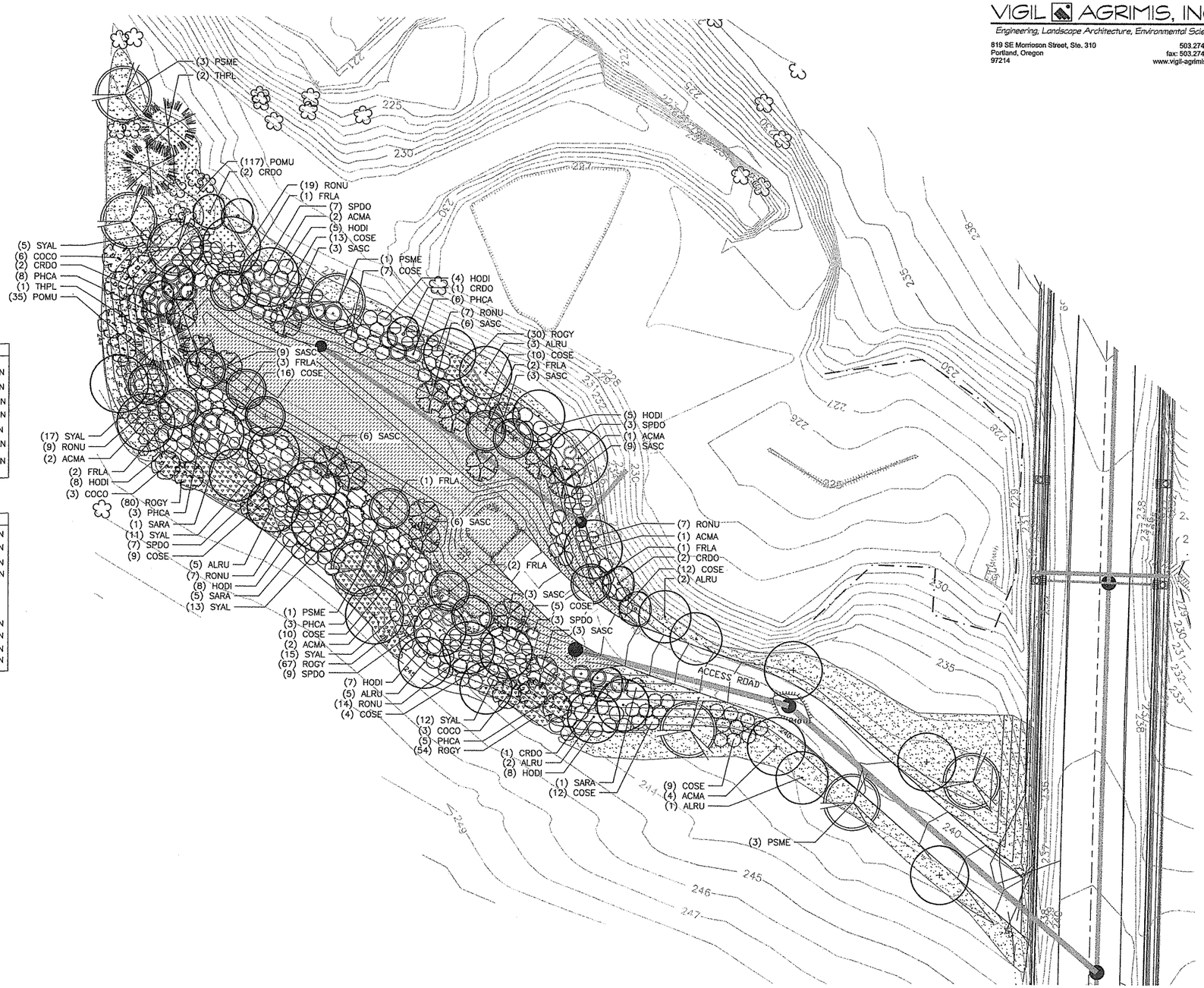

PLANT LEGEND – LS02

TREES

ABBR.	QTY.	SYMBOL	BOTANICAL /COMMON NAME	SIZE	CONDITION	SPACING
ACMA	12		Acer macrophyllum / big-leaf maple	10 GAL.	CONTAINER	AS SHOWN
ALRU	18		Alnus rubra / red alder	5 GAL.	CONTAINER	AS SHOWN
CRDO	8		Crataegus douglasii / Douglas hawthorn	5 GAL.	CONTAINER	AS SHOWN
FRLA	12		Fraxinus latifolia / Oregon ash	10 GAL.	CONTAINER	AS SHOWN
SASC	48		Salix scouleriana / Scouler's willow	LIVE STAKES	3 STAKES / LOCATION	
PSME	8		Pseudotsuga menziesii / Douglas fir	4–6'	B&B	AS SHOWN
THPL	3		Thuja plicata / Western red cedar	4–6'	B&B	AS SHOWN

SHRUBS

ABBR.	QTY.	SYMBOL	BOTANICAL /COMMON NAME	SIZE	CONDITION	SPACING
COSE	107		Cornus sericea / redosier dogwood	1 GAL.	CONTAINER	AS SHOWN
COCO	12		Corylus cornuta / beaked hazelnut	5 GAL.	CONTAINER	AS SHOWN
HODI	45		Holodiscus discolor/ ocean-spray	2 GAL.	CONTAINER	AS SHOWN
PHCA	25		Physocarpos capitatus / ninebark	5 GAL.	CONTAINER	AS SHOWN
POMU	152		Polystichum munitum / Western sword fern	1 GAL.	CONTAINER	24" O.C.
ROGY	231		Rosa gymnocarpa / bald-hip rose	1 GAL.	CONTAINER	36" O.C.
RONU	63		Rosa nutkana / Nootka rose	1 GAL.	CONTAINER	AS SHOWN
SARA	7		Sambucus racemosa / red elderberry	5 GAL.	CONTAINER	AS SHOWN
SPDO	29		Spiraea douglasii / hardhack	2 GAL.	CONTAINER	AS SHOWN
SYAL	73		Symphoricarpos albus / snowberry	1 GAL.	CONTAINER	AS SHOWN

EMERGENT / GRASS SEED MIXES

ABBR.	QTY.	SYMBOL	BOTANICAL /COMMON NAME	APPLICATION RATE	CONDITION
Emergent Seed Mix – Radke/Wetland 'J'					
CAOB	7000		Carex obnupta / slough sedge	SEE SPECIFICATIONS FOR SEED MIX AND APPLICATION RATE	PLS
CAUN	S.F.		Carex unilateralis / one-sided sedge		
JUEF			Juncus effusus / soft rush		
JUEN			Juncus ensifolius / dagger-leaf rush		
SCAC			Scirpus acutus / hard-stem bulrush		
SCMI			Scirpus microcarpus/ small-fruited bulrush		
Mitigation Seed Mix – Radke/Wetland 'J'					
FEID	8 lbs.		Festcua idahoensis / Idaho fescue	30 LB./ACRE	PLS
FERU	8 lbs.		Festuca r. var. rubra / native red fescue	30 LB./ACRE	
Permanent Erosion Control Mix for disturbed areas					
ELGL	as needed		Elymus glaucus / blue wildrye	48 LB./ACRE	PLS
FERU			Festuca r. var. rubra / native red fescue	12 LB./ACRE	

NOTE:
SEE SHEETS LS03 & LS04 FOR PLANTING DETAILS AND GENERAL PLANTING NOTES.

RADKE / WETLAND 'J' PLANTING PLAN
SOUTH STORMWATER POND

SCALE: 1" = 20'

0 10 20 40 80

DESIGNED	PDA
DRAWN	TLJ
CRP	CLARK003
HOR.	1"=20'
VERT.	
DATE	3/16/2004
DWG:	LS02
SHEET	53 OF 55

CALL 48 HOURS BEFORE YOU DIG
1-800-553-4344
"It's the Law"
NORTHWEST UTILITIES NOTIFICATION CENTER

STATE OF WASHINGTON REGISTERED LANDSCAPE ARCHITECT
PAUL DAVID AGRIMIS
CERTIFICATE NO. 640

DESIGN & ENGINEERING DIVISION
DESIGN SECTION

NE 10TH AVENUE
RADKE PROPERTY MITIGATION PLANTING PLAN

proud past, promising future
CLARK COUNTY
WASHINGTON

VIGIL AGRIMIS, INC.
Engineering, Landscape Architecture, Environmental Science
819 SE Morrisson Street, Ste. 310
Portland, Oregon
97214
503.274.2010
fax: 503.274.2024
www.vigil-agrimis.com

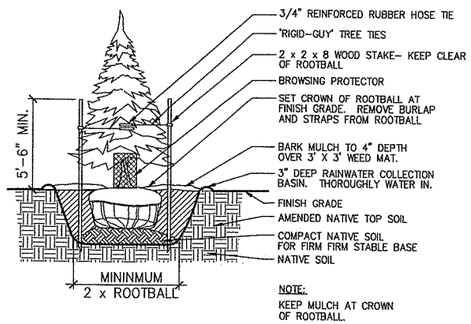

1 EVERGREEN TREE PLANTING
SCALE: NTS

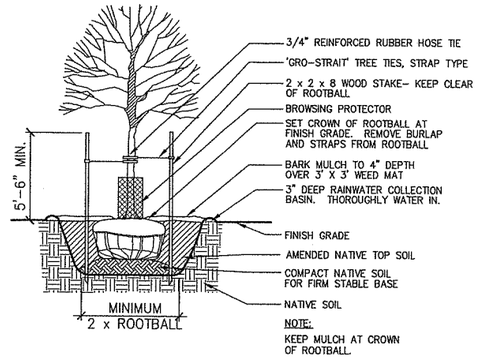

3 DECIDUOUS TREE PLANTING
SCALE: NTS

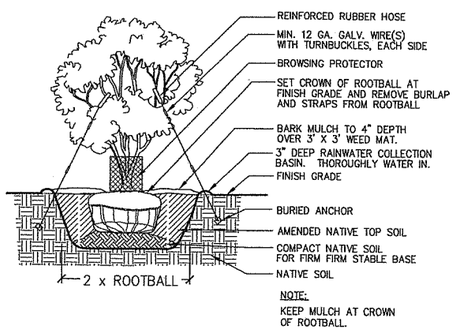

2 MULTI-STEM TREE PLANTING
SCALE: NTS

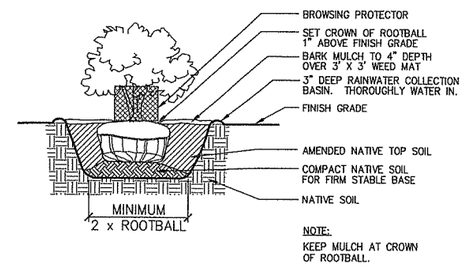

4 CONTAINER SHRUB PLANTING
SCALE: NTS

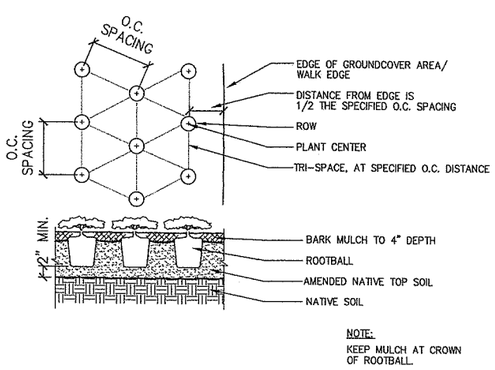

5 GROUNDCOVER PLANTING
SCALE: NTS

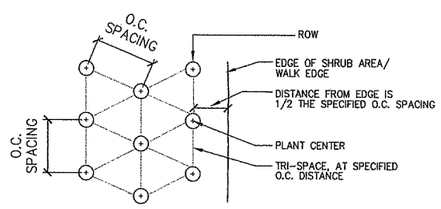

6 TYP. SHRUB SPACING
SCALE: NTS

GENERAL PLANTING NOTES:

1. CONTRACTOR SHALL VERIFY ALL QUANTITIES, MEASUREMENTS AND SITE CONDITIONS.

2. PRIOR TO COMMENCEMENT OF LANDSCAPE WORK, AN ON-SITE MEETING WILL BE HELD WITH THE GENERAL CONTRACTOR, LANDSCAPE CONTRACTOR, AND OWNER'S REPRESENTATIVE. THIS MEETING WILL BE FOR REVIEW AND APPROVAL OF ROUGH GRADING AND TO DIRECT LANDSCAPE CONTRACTOR ON FINISH GRADING AND SOIL PREPARATION. LANDSCAPE CONTRACTOR SHALL BE RESPONSIBLE FOR CONTACTING ALL PARTIES A MINIMUM OF TWO WORKING DAYS IN ADVANCE.

3. ALL PLANT MATERIALS USED SHALL BE GROWN IN CLARK COUNTY VICINITY, AND GROWN WITHIN 50 MILES OF THE PROJECT SITE. PLANT MATERIAL SHALL BE PROPAGATED FROM NATIVE SEED SOURCES, LOCAL TO OREGON OR WASHINGTON, WEST OF THE CASCADES. PROVIDE ONLY SOUND, HEALTHY, VIGOROUS PLANTS, FREE OF DEFECTS, DISEASES AND ALL FORMS OF INFESTATION.

4. A PRE-PLANTING MEETING WILL BE HELD UPON COMPLETION OF FINE-GRADING. LANDSCAPE CONTRACTOR SHALL CONTACT OWNER'S REPRESENTATIVE A MINIMUM OF TWO WORKING DAYS IN ADVANCE. PRIOR TO THE MEETING, LANDSCAPE CONTRACTOR MUST SUBMIT SAMPLES OF COMPOST, BARK MULCH, SEED, AND NURSERY SHIPPING LIST TO OWNER'S REPRESENTATIVE FOR APPROVAL. THE CONTRACTOR WILL STAKE OR FLAG PROPOSED PLANT LOCATIONS, INCLUDING THE CORNERS OF AREAS SHOWN FOR EMERGENT PLANTS, GROUND COVER AND SHRUB MASSES. OWNER'S REPRESENTATIVE WILL PROVIDE DIRECTION AND MAKE ADJUSTMENTS TO PLANT LOCATIONS AT THIS TIME. NO PLANTING WILL BE PERFORMED BEFORE THIS MEETING.

5. PLANTING PERIOD IS WEATHER DEPENDENT, MID-NOVEMBER TO MID-MARCH, AND PLANTING SEQUENCE SHALL BE ADJUSTED ACCORDING TO SOIL MOISTURE. ALL PLANTINGS SHALL BE COMPLETE BY THE FIFTEENTH OF MARCH UNLESS PLANTING PERIOD IS EXTENDED BY OWNER'S REPRESENTATIVE AS A RESULT OF CONTINUING MILD WEATHER. HERBACEOUS WETLAND MAY BE PLANTED IN LATE SUMMER IF GROUNDWATER MOISTENS THOSE PLANTING AREAS. HOWEVER, WOODY PLANT MATERIALS SHALL NOT BE PLANTED UNTIL FALL RAINS HAVE MOISTENED UPLAND LOCATIONS

6. KEEP PLANTS MOIST AND SHADED UNTIL INSTALLATION. DO NOT LEAVE THEM IN THE SUN OR LET THEM DRY OUT. THOROUGHLY WATER IN NEWLY PLANTED AREAS AND SATURATE EMERGENT PLANTS WITHIN 12 HOURS AFTER INSTALLATION.

7. DIG, PACK, TRANSPORT AND HANDLE ALL PLANTS WITH CARE TO ENSURE PROTECTION FROM INJURY. STORE PLANTS IN THE MANNER NECESSARY TO ACCOMMODATE THEIR HORTICULTURAL REQUIREMENTS. HEEL-IN PLANTS TO PROTECT ROOT BALLS AND KEEP THEM FROM DRYING OUT.

8. USE COMPOST AS SPECIFIED IN SPECIAL PROVISION SECTION 8-02.3(5) AND 8-02.3(6) OR EQUAL APPROVED BY CLARK COUNTY.

9. EMERGENT SEED AREAS SHALL RECEIVE COIR BLANKET STAPLED INTO PLACE AFTER FINE GRADING AND SEEDING ARE COMPLETED.

10. ALL PLANTS, MATERIALS, PLANTING AND SEEDING ACTIVITIES SHALL CONFORM IN SIZE AND GRADE TO THE 'AMERICAN STANDARD FOR NURSERY STOCK'. INFERIOR PLANTS SEED, OR WORKMANSHIP SHALL BE REJECTED BY OWNER'S REPRESENTATIVE.

11. PLANTS SHALL BE INSTALLED ACCORDING TO DETAILS. ALL STEPS IN PLANTING PROCESS SHALL BE PERFORMED AT THE TIME OF PLANTING. ONLY PLANTS WHICH REQUIRE ADDITIONAL SUPPORT, ARE TO BE STAKED. STAKES AND TIES, IF NECESSARY, SHALL BE REMOVED AFTER ONE YEAR.

12. ATTENTION SHALL BE GIVEN TO INSURE PLANTS ARE INSTALLED AT APPROPRIATE PLANTING DEPTH AS SHOWN IN DETAILS. ALL PLANTS SHALL HAVE A 3' X 3' WEED MAT PLACED AROUND THE BASE AND SECURED WITH 8 INCH STAPLES. FOLLOWING PLACEMENT OF WEED MAT, ANIMAL PROTECTORS SHALL BE IMMEDIATELY PLACED AROUND PLANTS AND SECURED WITH 8 INCH STAPLES. FINALLY, 4 INCHES OF BARK MULCH SHALL BE PLACED AROUND PLANTS.

13. PLANTS SHALL NOT BE INSTALLED WITHIN 5 FEET OF FENCE OR WITHIN 15 FEET OF CULVERT OR INLET.

14. PLANT SUBSTITUTION REQUEST MUST BE SUBMITTED TO CLARK COUNTY REPRESENTATIVE FOR APPROVAL.

15. CONTRACTOR SHALL COORDINATE WEED ERADICATION WITH CLARK COUNTY WEED MANAGEMENT. PHYSICAL REMOVAL OF WEEDS BY THE CONTRACTOR SHALL BE PERMISSIBLE. HERBICIDE USE AND CHEMICAL ERADICATION SHALL BE PERFORMED BY CLARK COUNTY. CONTROL BLACKBERRIES, THISTLE, TEASEL, PURPLE LOOSESTRIFE, SCOT'S BROOM, REED CANARYGRASS, ENGLISH IVY AND OTHER NOXIOUS OR INVASIVE WEEDS WHICH MAY DEVELOP ON SITE FOR DURATION OF WARRANTY PERIOD.

16. CONTRACTOR SHALL REPAIR AND SEED ALL AREAS DISTURBED THROUGHOUT COURSE OF CONSTRUCTION WITH APPROPRIATE SEED MIX AND APPLICATION RATE AS PRESCRIBED IN PLANT LEGEND AND SPECIFICATIONS. CONTRACTOR MAY SELECT SEEDING METHOD WITH APPROVAL OF CLARK COUNTY REPRESENTATIVE. AREAS WHICH FAIL TO ESTABLISH UNIFORM COVER SHALL BE RESEEDED AS NECESSARY.

17. CONTRACTOR SHALL PROVIDE TWO-YEAR PLANT WARRANTY AFTER ACCEPTANCE OF PLANTING. THE CONTRACTOR SHALL REPLACE ALL DEAD OR UNHEALTHY PLANTS FOUND BY OWNER'S REPRESENTATIVE AT THE END OF EACH ESTABLISHMENT PERIOD UNDER WARRANTY.

18. CONTRACTOR SHALL MAINTAIN WEEKLY; OR AS NEEDED TO PROVIDE ADEQUATE WATERING OF INSTALLED PLANTS TO ENSURE HEALTH AND SURVIVAL. CONTRACTOR SHALL BE RESPONSIBLE FOR THE ON-GOING HEALTH AND VIGOR OF PLANTS DURING THE PLANT ESTABLISHMENT PERIOD AS SPECIFIED IN SECTION 8-02.3(13) OF THE AMENDMENTS TO THE STANDARD SPECIFICATIONS. MAINTNENANCE SHALL INCLUDE MOW TALL GRASS/WEEDS, MONITOR TREE STAKES AND GUYS TO ENSURE PROPER SUPPORT WITHOUT DAMAGE TO TREE, AND RE-APPLY BARK MULCH AS NEEDED.

DESIGNED	PDA
DRAWN	TLJ
CRP	CLARK003
HOR.	
VERT.	
DATE	3/16/2004
DWG:	LS03
SHEET	54 OF 55

CALL 48 HOURS BEFORE YOU DIG
1-800-553-4344
"It's the Law"
NORTHWEST UTILITIES NOTIFICATION CENTER

STATE OF WASHINGTON
REGISTERED
LANDSCAPE ARCHITECT
PAUL DAVID AGRIMIS
CERTIFICATE NO. 640

DESIGN & ENGINEERING
DESIGN SECTION

NE 10TH AVENUE
MITIGATION PLANTING DETAILS / NOTES

proud past, promising future
CLARK COUNTY
WASHINGTON

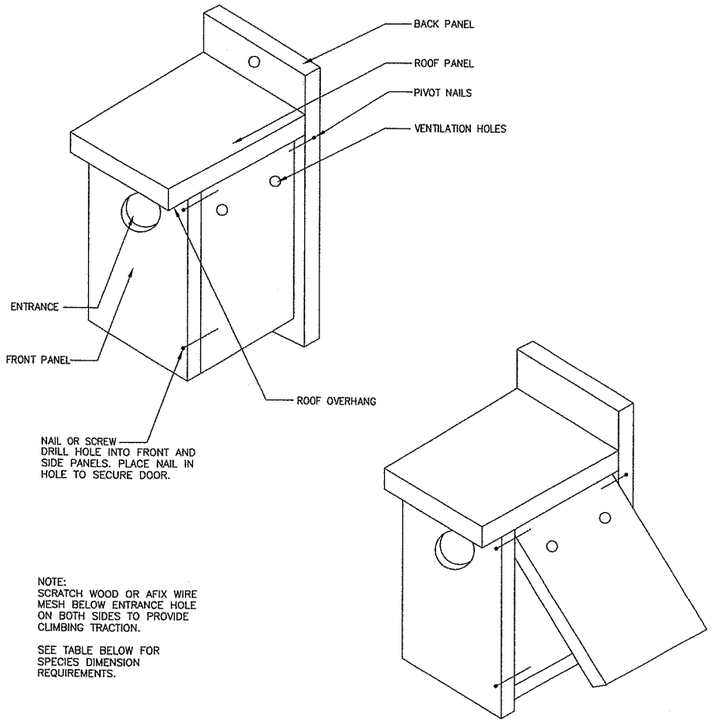

NOTE:
SCRATCH WOOD OR AFIX WIRE MESH BELOW ENTRANCE HOLE ON BOTH SIDES TO PROVIDE CLIMBING TRACTION.

SEE TABLE BELOW FOR SPECIES DIMENSION REQUIREMENTS.

1 BIRD NESTING BOX
SCALE: NTS

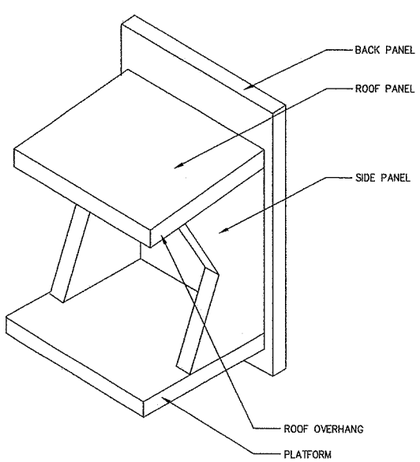

2 NESTING PLATFORM (ROBIN)
SCALE: NTS

HABITAT PERMIT CONDITIONS:

1. THE APPLICANT AND CONTRACTOR SHALL IMPLEMENT THE "NE 10TH AVENUE IMPROVEMENT PROJECT" MITIGATION PLAN, SUBMITTED BY VIGIL–AGRIMIS, INC., AND DATED NOVEMBER 8, 2003, EXCEPT AS AMENDED HEREIN.

2. THE CONTRACTOR SHALL, TO THE MAXIMUM EXTENT PRACTICABLE, SPARE THE REMOVAL OF ANY RED ALDER TREES LOCATED IN THE VICINITY OF THE NORTH STORMWATER POND. THIS INCLUDES THE USE OF RETAINING WALLS OR OTHER CONSTRUCTION BMP'S TO ENSURE TREE SURVIVAL OR AT LEAST TREE PRESERVATION. ROOT IMPACTS THAT CAUSE EVENTUAL TREE MORTALITY ARE ACCEPTABLE.

3. FOR EVERY TREE REMOVED IN THE NORTH STORMWATER POND, A SNAG SHALL BE ERECTED IN ITS PLACE. THE CONTRACTOR SHALL ERECT A MAXIMUM OF SEVEN (7) SNAGS IN THE VICINITY OF THE NORTH STORMWATER POND WHERE SEVEN RED ALDER TREES COULD BE REMOVED.

4. ERECTED SNAGS SHALL BE SPACED A MINIMUM OF 25–FEET APART, BE A MINIMUM OF 20–FEET TALL, AND CONTAIN A SUBSTANTIAL ROOT BALL SO AS TO REMAIN UPRIGHT OVER A SIGNIFICANT PERIOD OF TIME.

5. THE CONTRACTOR SHALL PLACE BIRD NEST BOXES ON SEVEN (7) ERECTED SNAGS OR RETAINED, BUT DAMAGED TREES IN THE VICINITY OF THE NORTH STORMWATER POND. NEST BOXES SHALL BE DESIGNED AND PLACED PER PUBLISHED NATIONAL AUDOBON SOCIETY GUIDELINES.

6. THE CONTRACTOR SHALL PLANT THE LARGEST CONTAINERIZED STOCK AVAILABLE IN ORDER TO BETTER FUNCTIONALLY REPLICATE THE HABITAT FUNCTIONS BEING LOST.

7. THE CONTRACTOR SHALL ENSURE AN 80% SURVIVAL RATE FOR ALL NEWLY PLANTED SEEDLINGS AFTER THREE (3) GROWING SEASONS. THE APPLICANT IS ENCOURAGED TO INDIVIDUALLY SCREEN SEEDLINGS FROM DEER DAMAGE THROUGH THE USE OF A PROTECTIVE SLEEVE, SHEATH, OR RELATED TUBULAR DEVICE, IN ORDER TO MEET THE ABOVE–MENTIONED SURVIVAL RATE.

8. OTHER THAN WHAT IS APPROVED ON THE CONSTRUCTION PLANS, NO FURTHER TREES SHALL BE REMOVED OR CRITICAL ROOT ZONES DAMAGED DURING THE PROJECT.

9. TO THE MAXIMUM EXTENT PRACTICABLE, THE CONTRACTOR SHALL EMPLOY THE USE OF RETAINING WALLS IN ORDER TO MINIMIZE TREE REMOVAL OR ROOT DISTURBANCE IMPACTS.

10. ALL STORMWATER FACILITIES PLANTED FOR HABITAT MITIGATION SHALL BE CLEARLY SIGNED TO INDICATE THAT NO VEGETATION REMOVAL IS TO OCCUR THERE, FOR PURPOSES OF INFORMING FUTURE MAINTENANCE AND OPERATIONS STAFF.

11. THE CONTRACTOR SHALL NOT REMOVE NATIVE VEGETATION AND/OR CONDUCT CONSTRUCTION ACTIVITY WITHIN HABITAT AREAS OTHER THAN WHAT IS APPROVED ON THE ATTACHED SITE PLAN (SEE ATTACHED SITE PLAN). ANY FURTHER CLEARING AND/OR CONSTRUCTION ACTIVITY WITHIN HABITAT AREAS WILL BE SUBJECT TO ADDITIONAL COUNTY REVIEW.

VIGIL AGRIMIS, INC.
Engineering, Landscape Architecture, Environmental Science
819 SE Morrison Street, Ste. 310
Portland, Oregon
97214
503.274.2010
fax: 503.274.2024
www.vigil-agrimis.com

DESIGNED PDA
DRAWN TLJ
CRP CLARK003
HOR.
VERT.
DATE 3/16/2004
DWG: LS04
SHEET 55 OF 55

CALL 48 HOURS BEFORE YOU DIG
1–800–553–4344
"It's the Law"
NORTHWEST UTILITIES NOTIFICATION CENTER

STATE OF WASHINGTON
REGISTERED LANDSCAPE ARCHITECT
PAUL DAVID AGRIMIS
CERTIFICATE NO. 640

DESIGN & ENGINEERING DIVISION
DESIGN SECTION

NE 10TH AVENUE
MITIGATION PLANTING DETAILS / NOTES – SHT. 2

proud past, promising future
CLARK COUNTY
WASHINGTON