CAPITAL IMPROVEMENTS PROGRAM
COUNTY ROAD PROJECT #320922

NE 76th STREET

FROM NE 94th AVENUE TO NE 107th AVENUE

PLANS FOR THE CONSTRUCTION OF
ROADWAYS, SIDEWALKS, AND STORM DRAINAGE

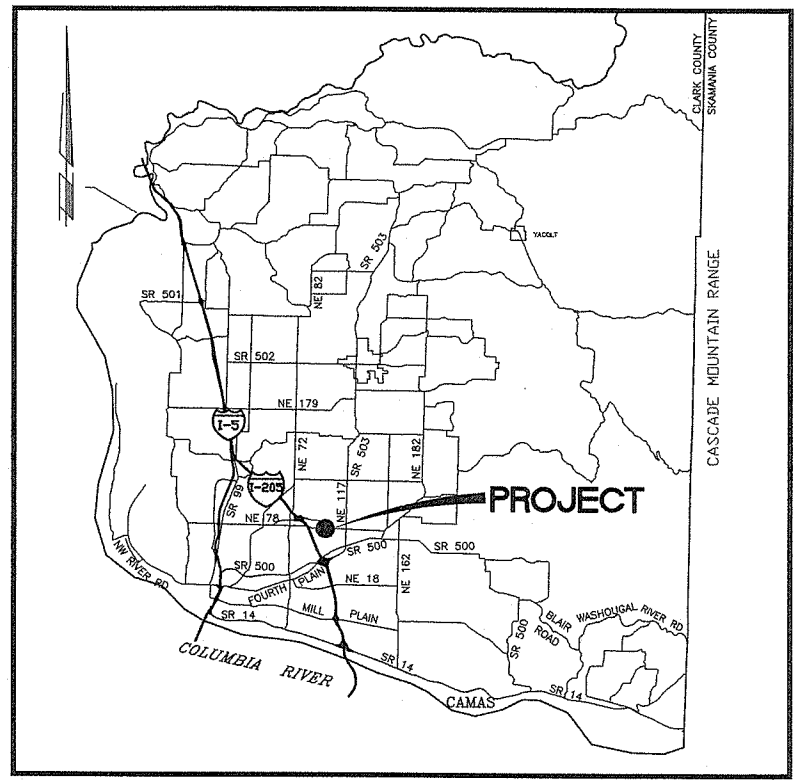

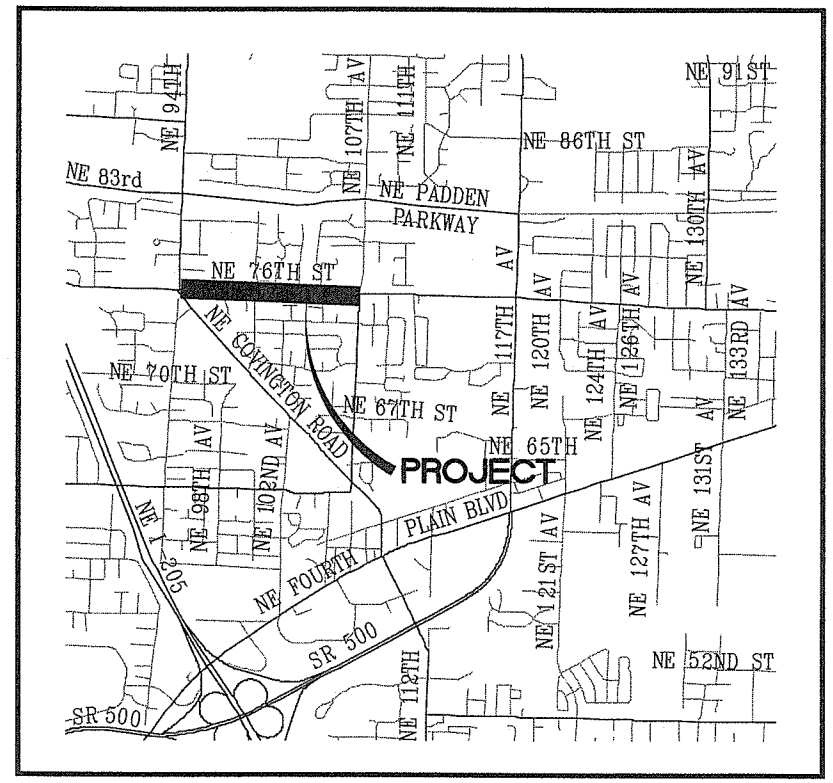

INDEX OF SHEETS

1	CV1	COVER SHEET
2	SQ1	SUMMARY OF QUANTITIES AND LEGEND
3	TS1	TYPICAL SECTIONS
4	HV1	HORIZONTAL AND VERTICAL CONTROL
5	HV2	HORIZONTAL AND VERTICAL CONTROL
6	EC1	EROSION CONTROL PLAN
7	EC2	EROSION CONTROL PLAN
8	EC3	EROSION CONTROL DETAILS
9	EC4	EROSION CONTROL DETAILS
10	SWF1	STORMWATER FACILITY
11	SWF2	STORMWATER FACILITY DETAILS
12	D01	ROADWAY DETAILS
13	D02	DRAINAGE DETAILS
14	PP1	PLAN & PROFILE (B.O.P. TO STA 4+00)
15	PP2	PLAN & PROFILE (STA 4+00 TO 9+00)
16	PP3	PLAN & PROFILE (STA 9+00 TO 13+00)
17	PP4	PLAN & PROFILE (STA 13+00 TO 18+00)
18	PP5	PLAN & PROFILE (STA 18+00 TO 23+00)
19	PP6	PLAN & PROFILE (STA 23+00 TO 28+00)
20	PP7	PLAN & PROFILE (STA 28+00 TO E.O.P.)
21	WP1	STANDARD WATER LINE DETAILS
22	WP2	STANDARD WATER LINE DETAILS
23	I01	INTERSECTION PLAN
24	I02	INTERSECTION PLAN
25	DP1	DRAINAGE PLAN (B.O.P. TO STA 4+00)
26	DP2	DRAINAGE PLAN (STA 4+00 TO 9+00)
27	DP3	DRAINAGE PLAN (STA 9+00 TO 13+00)
28	DP4	DRAINAGE PLAN (STA 13+00 TO 18+00)
29	DP5	DRAINAGE PLAN (STA 18+00 TO 23+00)
30	DP6	DRAINAGE PLAN (STA 23+00 TO 28+00)
31	DP7	DRAINAGE PLAN (STA 28+00 TO E.O.P.)
32	SS1	SIGNING & STRIPING PLAN (STA 2+00 TO STA 32+00)
33	LS1	LANDSCAPING PLAN (STA 4+50 TO 16+50)
34	LS2	LANDSCAPING PLAN (STA 16+50 TO E.O.P.)
35	LS3	LANDSCAPING DETAILS
36	UPP	FOSTER AUTO PARTS PARKING LOT
37	STMS1	STORM LATERAL CROSS SECTIONS
38	RCD1	ROAD CLOSURE AND DETOUR PLAN
39	SIGINT1	TRAFFIC SIGNAL INTERCONNECT (B.O.P. TO STA 20+00)
40	SIGINT2	TRAFFIC SIGNAL INTERCONNECT (STA 20+00 TO E.O.P.)

ATTACHMENTS:

- N.E. 76th STREET AT N.E. 107th AVENUE – SIGNAL PLAN
- N.E. 76th STREET AT N.E. 107th AVENUE – TRAFFIC SIGNAL SYSTEM PLAN (EXISTING SIGNAL PLAN)
- N.E. COVINGTON ROAD AT NE 76th STREET – TRAFFIC SIGNAL PLAN

ENG 2002-00133 CCC 13.29 (7/18/2000)

CLARK COUNTY WASHINGTON — proud past, promising future

Recommended for Approval

Grading ✓ Erosion ✓

Storm Water Plan ✓

Development Review Manager — Date 1/28/2004

COMMISSIONERS:

BETTY SUE MORRIS, Chair
CRAIG A. PRIDEMORE, Commissioner
JUDIE STANTON, Commissioner

Quality Assurance	Project Manager	Public Works Director/ County Engineer
1/27/04	1/27/04	1/27/04
Gregory Shafer, P.E.	Richard Gamble, P.E.	Peter Capell, P.E.

CLARK COUNTY WASHINGTON — proud past, promising future

DEPARTMENT OF PUBLIC WORKS

DESIGN AND ENGINEERING DIVISION- DESIGN SECTION

MacKay & Sposito, Inc. — M&S
ENGINEERS SURVEYORS PLANNERS
1703 MAIN STREET VANCOUVER, WA 98660
(360) 695-3411 (503) 289-6726 (888) 695-3411 FAX (360) 695-0833
www.mackaysposito.com

DONALD J. MOSER — STATE OF WASHINGTON — 22994 REGISTERED PROFESSIONAL ENGINEER
1-26-04
EXPIRES: JUNE 22, 2004

DATE PLOTTED: Jan 23, 2004 - 3:33pm M&S DRAWING FILE: W:\DWG\13500\13573\Final Design\13573COVER.dwg

SUMMARY OF QUANTITIES

PART I

ITEM NO.	APPROX. QUANTITY	UNIT	DESCRIPTION
1	1	L.S.	MOBILIZATION
2	1	CALC.	MINOR CHANGE
3	5	HOUR	REPLACEMENT STAKING SERVICES
4	1	L.S.	TEMPORARY CONSTRUCTION PERMIT/ PROPERTY OWNER AGREEMENTS
5	13	DAY	INCENTIVE
6	3,000	HOUR	TRAFFIC CONTROL LABOR
7	750	HOUR	TRAFFIC CONTROL SUPERVISOR
8	1	L.S.	TEMPORARY TRAFFIC CONTROL DEVICES
9	300	S.F.	CONSTRUCTION SIGNS - CLASS "A"
10	2	EA.	PORTABLE CHANGEABLE MESSAGE SIGN
11	192	HOUR	OPERATION OF PORTABLE CHANGEABLE MESSAGE SIGN
12	1	L.S.	CLEARING AND GRUBBING
13	1	EST.	ROADSIDE CLEANUP
14	1	L.S.	REMOVAL OF STRUCTURE AND OBSTRUCTION
15	1	EST.	REMOVAL OF HAZARDOUS MATERIALS- FORCE ACCOUNT
16	2	EA.	DECOMMISSION SEPTIC SYSTEM
17	1	L.S.	STRUCTURE DEMOLITION AND REMOVAL
18	7,815	C.Y.	ROADWAY EXCAVATION (INCL. HAUL)
19	555	C.Y.	EMBANKMENT COMPACTION
20	440	MGAL	WATER
21	5,544	TON	CRUSHED SURFACING BASE COURSE
22	3,451	TON	ASPHALT CONCRETE PAVEMENT CL. A
23	2,302	TON	ASPHALT CONCRETE PAVEMENT CL. E
24	1,289	L.F.	SAWCUT EXISTING PAVEMENT
25	1,118	S.Y.	ASPHALT CONCRETE APPROACH OR EXTENSION, CL. A
26	135	S.F.	MASONRY RETAINING WALL
27	231	L.F.	UNDERDRAIN PIPE, 24 IN. DIAM.
28	7	L.F.	STORM SEWER PIPE, 3 IN. DIAM.
29	719	L.F.	STORM SEWER PIPE, 10 IN. DIAM.
30	2,026	L.F.	STORM SEWER PIPE, 12 IN. DIAM.
31	791	L.F.	STORM SEWER PIPE, 15 IN. DIAM.
32	77	L.F.	STORM SEWER PIPE, 18 IN. DIAM.
33	3	EA.	MANHOLE 48 IN. DIAM. TYPE 1
34	1	EA.	MANHOLE 60 IN. DIAM. TYPE 1
35	5	EA.	MANHOLE 48 IN. DIAM. TYPE 3
36	2	EA.	MANHOLE 60 IN. DIAM. TYPE 3
37	3	EA.	CATCH BASIN TYPE 1
38	1	EA.	CATCH BASIN TYPE 2, 60 IN. DIAM. (W/ MANHOLOE RING & LOCKING LID AND FLOW CONTROL)
39	8	EA.	PRECAST CONCRETE DRYWELL
40	14	EA.	CONCRETE CURB INLET
41	11	EA.	CONCRETE COMBINATION CURB INLET
42	28	EA.	LOW PROFILE DEBRIS TRAP
43	11	EA.	ADJUST MANHOLE, DRYWELL, OR CATCH BASIN
44	1	EA.	CONNECTION TO DRAINAGE STRUCTURE
45	1	EA.	STANDARD PRECAST STORMFILTER UNIT (6' x 12' W/11 LEAF COMPOST CARTRIDGES)
46	1	EA.	STANDARD PRECAST STORMFILTER UNIT (8' x 16' W/23 LEAF COMPOST CARTRIDGES)
47	3,878	L.F.	TRENCH SAFETY SYSTEM
48	3	EA.	ADJUST GAS VALVE RIM, COVER, OR FRAME
49	34	L.F.	4" SANITARY LATERAL
50	95	DAY	ESC LEAD
51	2	EA.	STABILIZED CONSTRUCTION ENTRANCE
52	2	EA.	TIRE WASH (RECIRCULATING)
53	32	EA.	INLET PROTECTION
54	3,740	L.F.	SILT FENCE
55	1	EA.	EROSION CONTROL & SPILL PREVENTION REINSPECTION FEE
56	1	L.S.	SPCC PLAN
57	110	C.Y.	COMPOST AMENDED TOPSOIL
58	0.65	ACRE	SEEDING AND MULCHING
59	186	L.F.	CEMENT CONCRETE TRAFFIC CURB (TYPE E-1)
60	5,865	L.F.	CEMENT CONCRETE TRAFFIC CURB AND GUTTER (TYPE A-1)
61	137	L.F.	CEMENT CONCRETE ROLLED CURB AND GUTTER (MOUNTABLE)
62	1,025	S.Y.	CEMENT CONCRETE APPROACH 3 DAY
63	242	S.Y.	COMMERCIAL CEMENT CONCRETE APPROACH 3 DAY
64	614	L.F.	CHAIN LINK FENCE TYPE 6
65	787	L.F.	REMOVE AND RESET FENCE (INCL. GATE)
66	8	EA.	MONUMENT CASE AND COVER
67	3,260	S.Y.	CEMENT CONCRETE SIDEWALK
68	24	EA.	DETECTABLE WARNING PATTERN
69	18	EA.	MAILBOX SUPPORT TYPE 1-S
70	1	L.S.	DETECTION SENSORS
71	1	L.S.	TRAFFIC SIGNAL INTERCONNECT
72	240	L.F.	CONDUIT PIPE SCHEDULE 40 GRAY 2 IN. DIAM. (COMCAST)
73	240	L.F.	CONDUIT PIPE SCHEDULE 40 GRAY 3 IN. DIAM. (PUD)
74	240	L.F.	CONDUIT PIPE SCHEDULE 40 GRAY 4 IN. DIAM. (QWEST)

PART II

ITEM NO.	APPROX. QUANTITY	UNIT	DESCRIPTION
75	1	L.S.	MOBILIZATION (WATER)
76	1	CALC.	MINOR CHANGE (WATER)
77	94	L.F.	TRENCH SAFETY SYSTEM (WATER)
78	16	EA.	ADJUST WATER VALVE RIM, COVER, OR FRAME
79	71	L.F.	CL 52 DI PIPE FOR WATER MAIN, 6 IN. DIAM.
80	23	L.F.	CL 52 DI PIPE FOR WATER MAIN, 8 IN. DIAM.
81	1	EA.	BLOWOFF VALVE (TEMPORARY)
82	4	EA.	12 IN MJ x 6 IN FLG. TAPPING SLEEVE
83	1	EA.	12 IN MJ x 8 IN FLG. TAPING SLEEVE
84	1	EA.	8 IN FLG. x 8 IN MJ. TAPING SLEEVE
85	2	EA.	6 IN FLG. x 6 IN MJ. TAPPING SLEEVE
86	2	EA.	HYDRANT ASSEMBLY
87	2	EA.	MOVING EXISTING HYDRANTS
88	24	EA.	EXTEND EXISTING 3/4 IN WATER SERVICE

LEGEND

- ROW LINE
- NEW EDGE OF PAVEMENT
- NEW CURB LINE
- NEW CENTER LINE
- NEW FENCE LINE
- NEW STORM DRAIN OR CULVERT
- NEW FILL LIMITS
- NEW CUT LIMITS
- SAWCUT LINE
- PERMANENT SLOPE EASEMENT
- NEW SILT FENCE
- EXISTING EDGE OF PAVEMENT
- EXISTING CURB LINE
- EXISTING CENTER LINE
- EXISTING FENCE LINE
- EXISTING TELEPHONE LINE
- EXISTING WATER LINE
- EXISTING UNDERGROUND ELECTRIC
- EXISTING SANITARY SEWER LINE
- EXISTING STORM DRAINAGE
- EXISTING GAS LINE
- EXISTING CULVERT
- EXISTING DITCH CENTER LINE
- EXISTING GUARDRAIL

SYMBOLS

- NEW CATCH BASIN (CB)
- NEW MANHOLE (MH)
- NEW CURB INLET (CI)
- NEW COMBINATION CURB INLET (CCI)
- NEW FIRE HYDRANT
- NEW MAIL BOX
- NEW HANDICAP RAMP
- CURVE TABLE
- EXISTING TRANSFORMER
- EXISTING ELEC TOWER
- EXISTING SANITARY SEWER MH
- EXISTING FIRE HYDRANT
- EXISTING CLEAN OUT
- EXISTING GAS VALVE
- EXISTING WATER METER
- EXISTING WATER VALVE
- EXISTING SIGNAL POLE
- EXISTING TELEPHONE VAULT
- EXISTING TELEVISION BOX
- EXISTING BRUSH LINE
- EXISTING HEDGE
- EXISTING CURB INLET (CI)
- EXISTING CATCH BASIN (CB)
- EXISTING STORM MH
- EXISTING MISC MH
- EXISTING SHRUB
- EXISTING CONIFEROUS TREE
- EXISTING DECIDUOUS TREE
- EXISTING SIGN
- EXISTING DECIDUOUS TREE
- EXISTING J BOX
- EXISTING TELEPHONE MANHOLE
- EXISTING TELEPHONE POLE
- EXISTING LIGHT
- EXISTING GUY ANCHOR
- EXISTING POWER POLE
- EXISTING MAIL BOX
- EXISTING TELEPHONE PEDESTAL
- EXISTING SPRINKLER HEAD
- TRAVERSE POINT
- TEST HOLE
- CURB RAMP
- EXISTING WELL

DESIGNED SLF
DRAWN SLF/BY
CRP #320922
HOR. N/A
VERT. N/A
DATE 01-23-04
DWG: S01
SHEET 2 OF 40

CALL 48 HOURS BEFORE YOU DIG 1-800-553-4344 "It's the Law" NORTHWEST UTILITIES NOTIFICATION CENTER

EXPIRES: JUNE 23, 2004

DESIGN & ENGINEERING DIVISION
DESIGN SECTION

NE 76TH STREET
SUMMARY OF QUANTITIES AND LEGEND

proud past, promising future
CLARK COUNTY WASHINGTON

DATE PLOTTED: Jan 27, 2004 - 11:39am M&S DRAWING FILE: W:\DWR\13500\13573\Final Design\13573S01.dwg

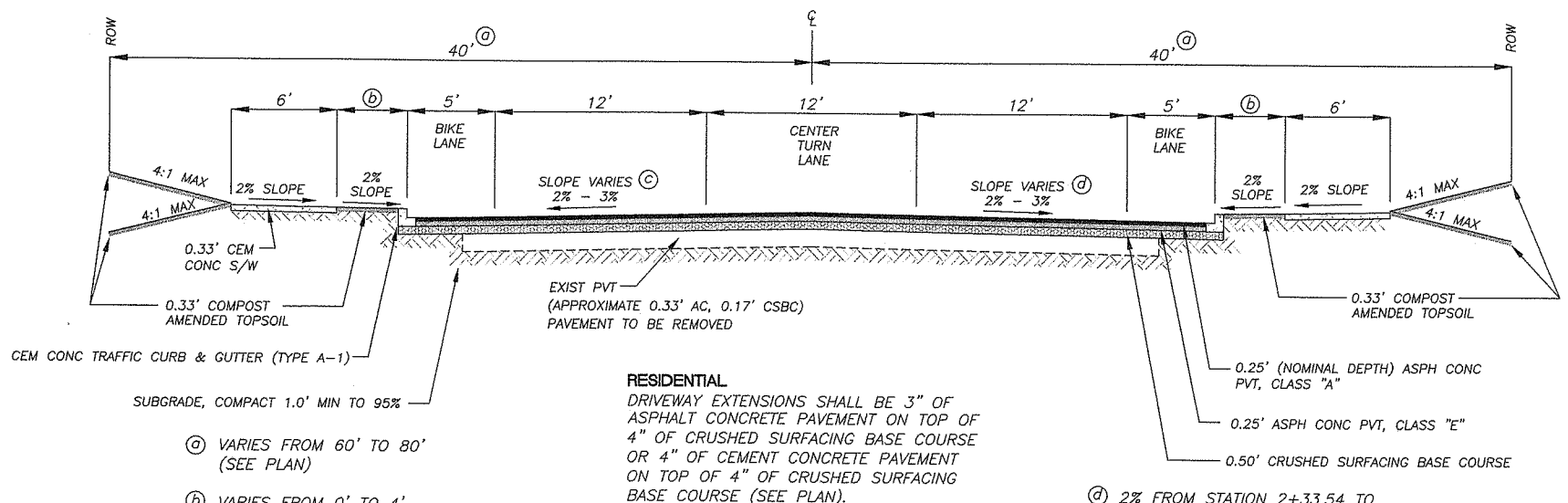

ⓐ VARIES FROM 60' TO 80' (SEE PLAN)

ⓑ VARIES FROM 0' TO 4' (SEE PLAN)

ⓒ 2% FROM STATION 5+00.00 TO 25+84.58, 28+50.00 TO 32+02.58 AND

3% FROM STATION 2+33.54 TO 4+50.00, 26+18.41 TO 28+00.00

RESIDENTIAL

DRIVEWAY EXTENSIONS SHALL BE 3" OF ASPHALT CONCRETE PAVEMENT ON TOP OF 4" OF CRUSHED SURFACING BASE COURSE OR 4" OF CEMENT CONCRETE PAVEMENT ON TOP OF 4" OF CRUSHED SURFACING BASE COURSE (SEE PLAN).

COMMERCIAL/ INDUSTRIAL

DRIVEWAY EXTENSIONS SHALL BE 3" OF ASPHALT CONCRETE PAVEMENT ON TOP OF 6" OF CRUSHED SURFACING BASE COURSE OR 8" MIN. OF CEMENT CONCRETE PAVEMENT WITH 6"X6" 10 GA WIRE MESH ON TOP OF 3" OF CRUSHED SURFACING BASE COURSE (SEE PLAN).

ⓓ 2% FROM STATION 2+33.54 TO 24+00.00, 28+50.00 TO 31+97.97 AND

3% FROM STATION 24+50.00 TO 28+00.00

SAME PAVEMENT AND ROCK SECTION FOR NE 100TH AVENUE, NE 101ST AVENUE, NE 103RD AVENUE AND NE 104TH AVENUE

NE 76TH STREET

NTS

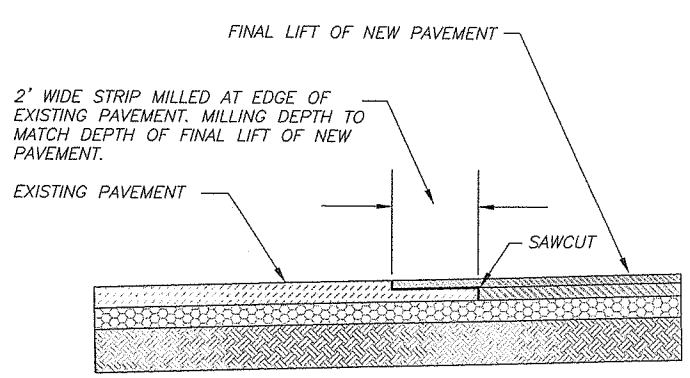

LAP JOINT DETAIL

NTS

DESIGNED SLF
DRAWN SLF/BY/IP
CRP #320922
HOR. N/A
VERT. N/A
DATE 01-23-04
DWG: TS1
SHEET 3 OF 40

CALL 48 HOURS BEFORE YOU DIG
1-800-553-4344
"It's the Law"
NORTHWEST UTILITIES NOTIFICATION CENTER

DONALD J. MOSER
STATE OF WASHINGTON
22894
REGISTERED PROFESSIONAL ENGINEER
1-26-04
EXPIRES: JUNE 22, 2004

DESIGN & ENGINEERING DIVISION
DESIGN SECTION

NE 76TH STREET
TYPICAL SECTIONS

proud past, promising future
CLARK COUNTY
WASHINGTON

DATE PLOTTED: Jan 23, 2004 – 3:34pm MAS DRAWING FILE: W:\DWG\13500\13573\Final Design\13573TS1.dwg

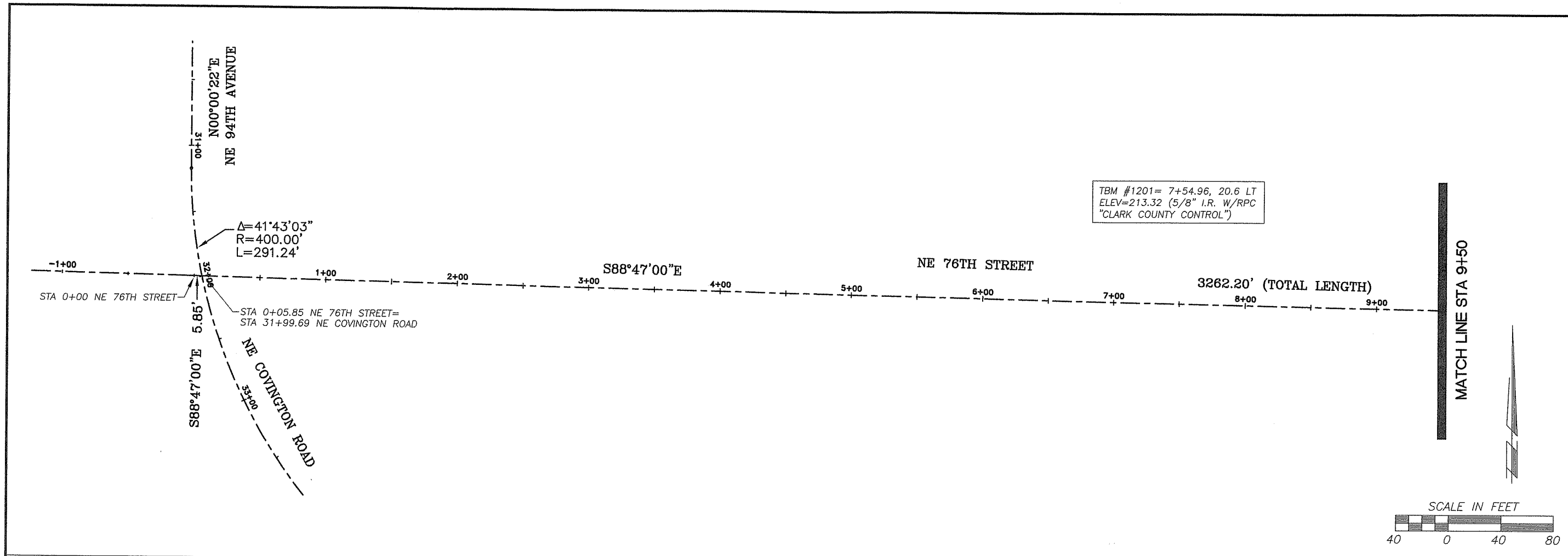

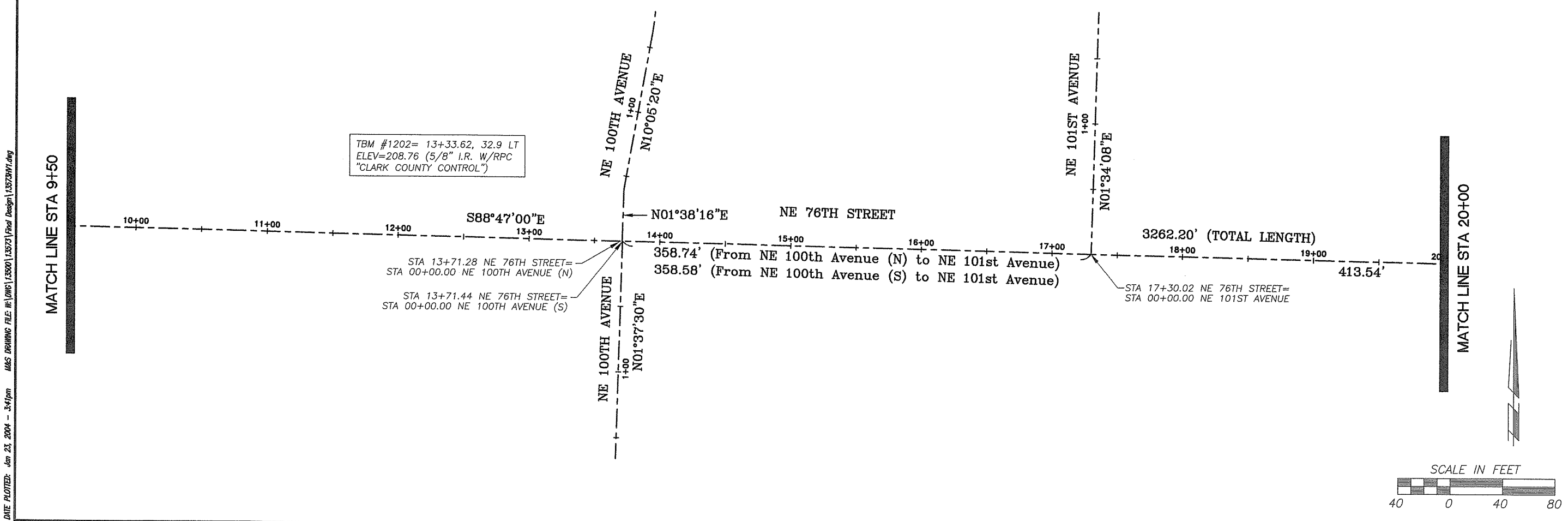

DESIGNED	SLF
DRAWN	SLF/BY
CRP	#320922
HOR.	1"=40'
VERT.	N/A
DATE	01-23-04
DWG.	HV1
SHEET 4	OF 40

CALL 48 HOURS BEFORE YOU DIG
1-800-553-4344
"It's the Law"
NORTHWEST UTILITIES NOTIFICATION CENTER

STATE OF WASHINGTON
DONALD J. MOORE
22394
REGISTERED PROFESSIONAL ENGINEER
1-26-04
EXPIRES: JUNE 27, 2004

DESIGN & ENGINEERING DIVISION
DESIGN SECTION

NE 76TH STREET
HORIZONTAL AND VERTICAL CONTROL

proud past, promising future
CLARK COUNTY
WASHINGTON

DATE PLOTTED: Jan 23, 2004 - 3:41pm MAS DRAWING FILE: W:\DWG\13500\13573\Final Design\13573HV1.dwg

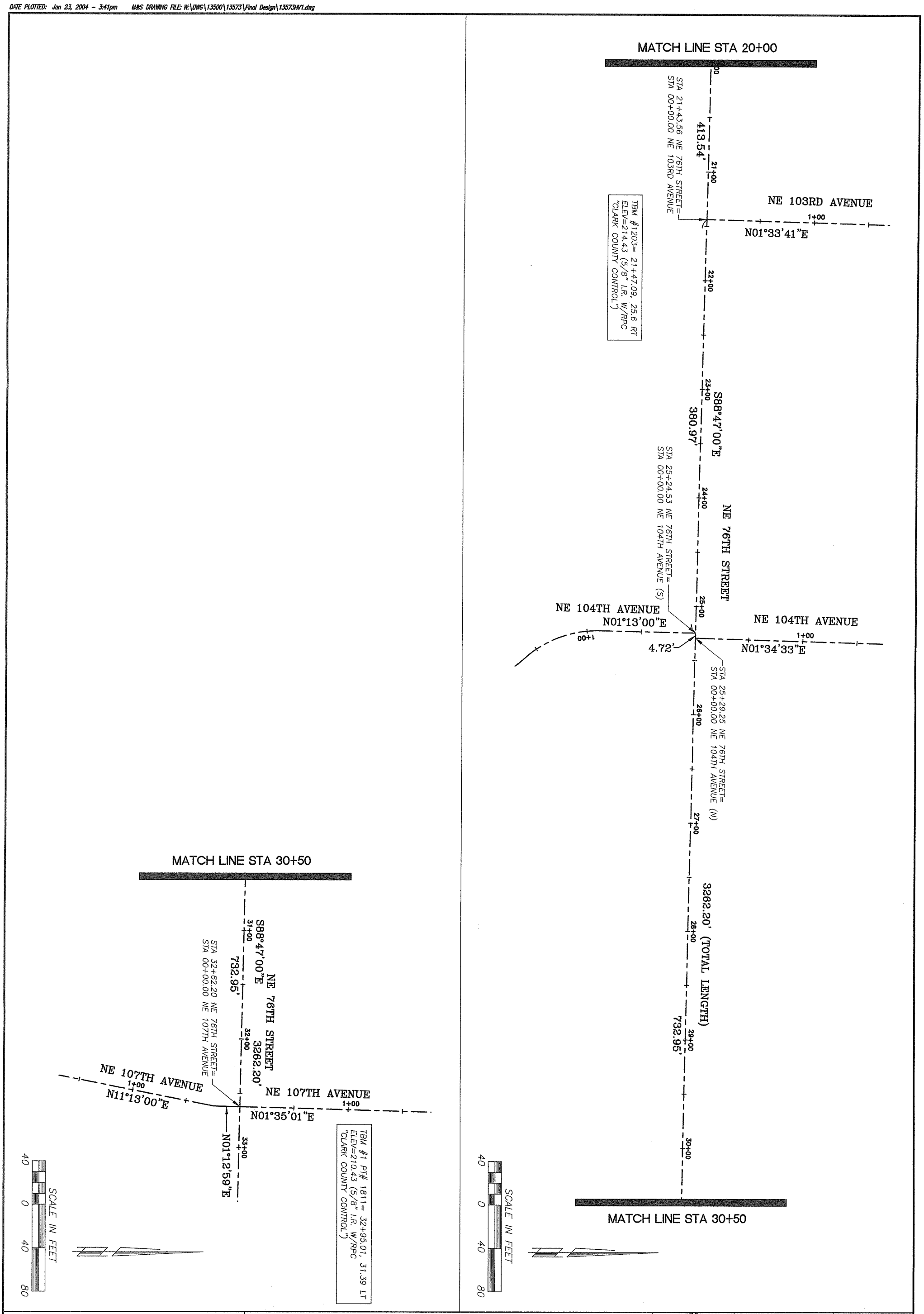

proud past, promising future

CLARK COUNTY
WASHINGTON

DESIGN & ENGINEERING DIVISION
DESIGN SECTION

NE 76TH STREET
HORIZONTAL AND VERTICAL CONTROL

DONALD J. MOE
STATE OF WASHINGTON
22994
REGISTERED
PROFESSIONAL ENGINEER
1-26-04
EXPIRES: JUNE 22, 2004

CALL 48 HOURS BEFORE YOU DIG
1-800-553-4344
"It's the Law"
NORTHWEST UTILITIES NOTIFICATION CENTER

DESIGNED	SLF
DRAWN	SLF/BY
CRP	#320922
HOR.	1"=40'
VERT.	N/A
DATE	01-23-04
DWG:	HV2
SHEET 5	OF 40

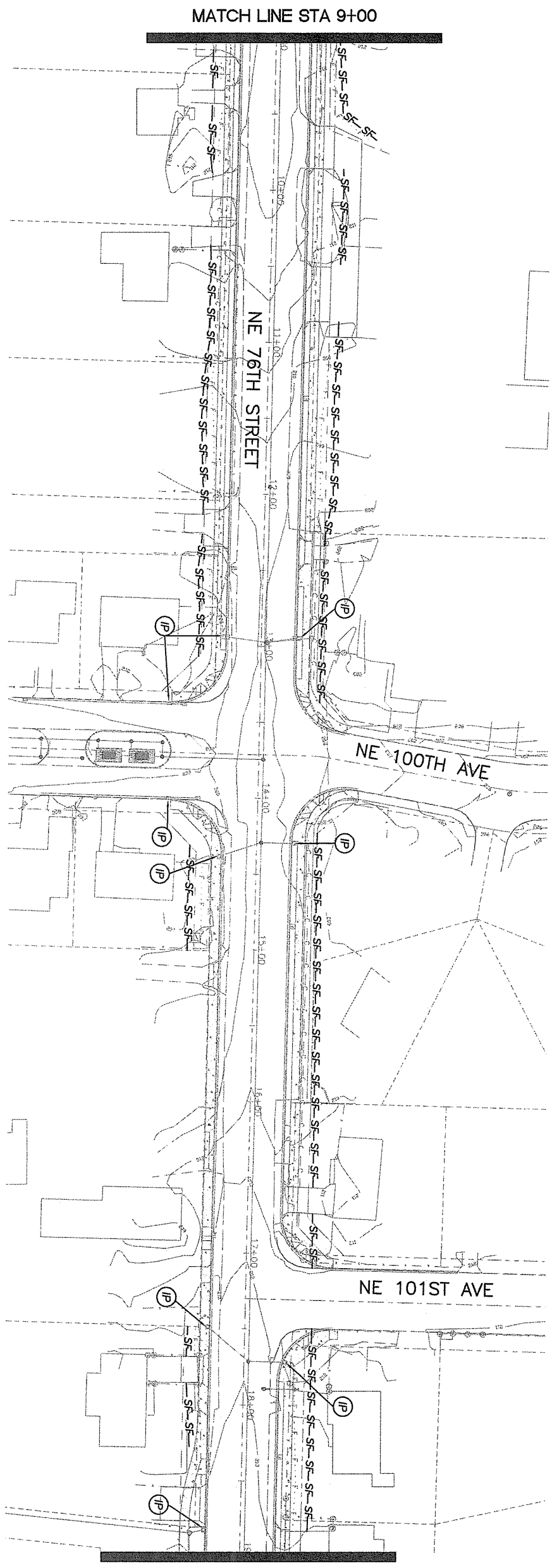

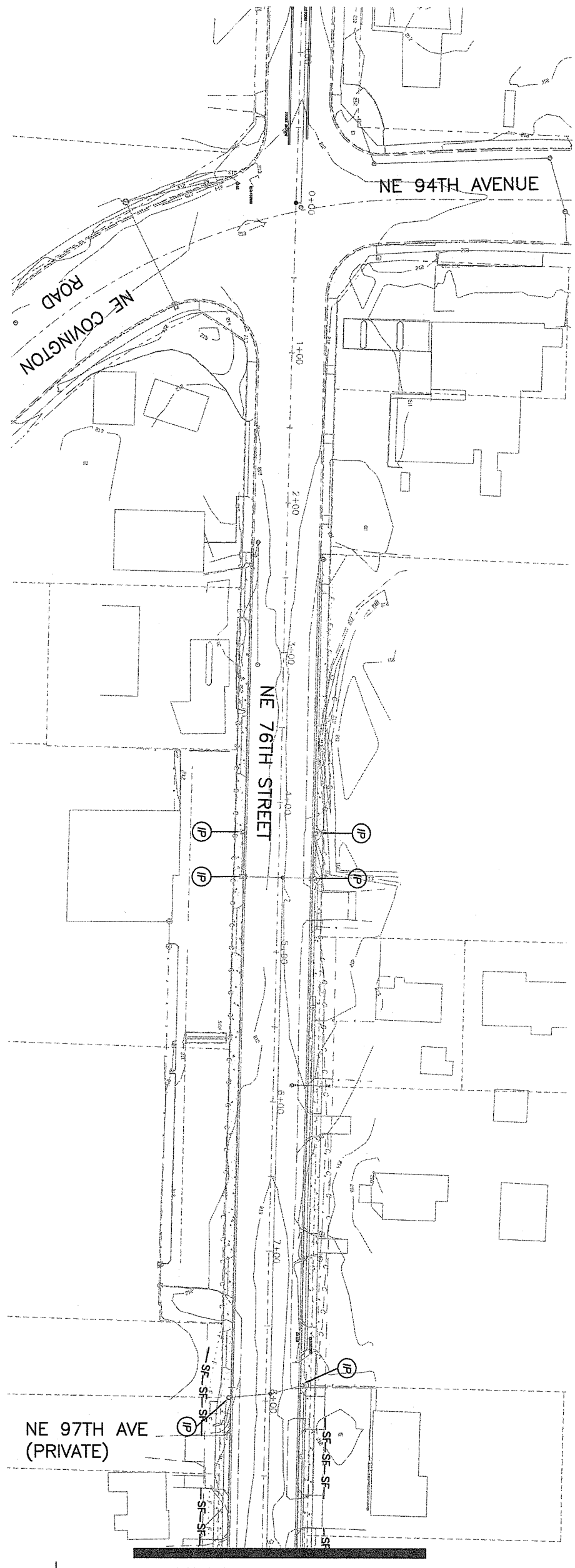

SCALE IN FEET 40 0 40 80

LEGEND

-SF- SILT FENCE

IP INLET PROTECTION

proud past, promising future

CLARK COUNTY WASHINGTON

DESIGN & ENGINEERING DIVISION
DESIGN SECTION

NE 76TH STREET
EROSION CONTROL PLAN

DONALD J. MOE STATE OF WASHINGTON 22994 REGISTERED PROFESSIONAL ENGINEER
1-26-04
EXPIRES: JUNE 22, 2004

CALL 48 HOURS BEFORE YOU DIG
1-800-553-4344
"It's the Law"
NORTHWEST UTILITIES NOTIFICATION CENTER

DESIGNED	SLF
DRAWN	SLF/AF
CRP	#320922
HOR.	1"=40'
VERT.	N/A
DATE	01-23-04
DWG:	EC1
SHEET 6	OF 40

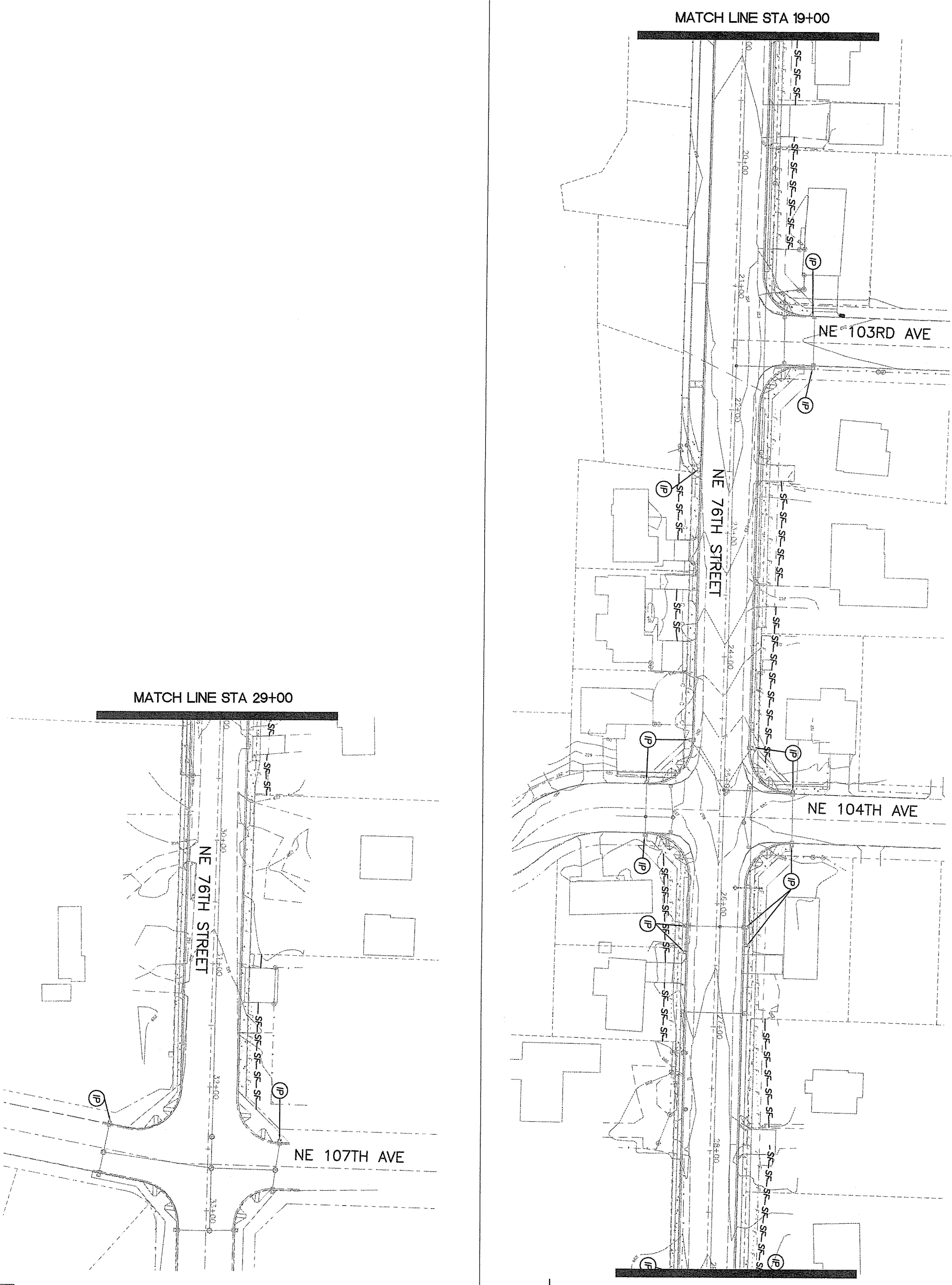

proud past, promising future

CLARK COUNTY
WASHINGTON

DESIGN & ENGINEERING DIVISION
DESIGN SECTION

NE 76TH STREET
EROSION CONTROL PLAN

DONALD J. MOEN
STATE OF WASHINGTON
22994
REGISTERED
PROFESSIONAL ENGINEER
1-26-04
EXPIRES: JUNE 22, 2004

CALL 48 HOURS BEFORE YOU DIG
1-800-553-4344
"It's the Law"
NORTHWEST UTILITIES NOTIFICATION CENTER

DESIGNED	SLF
DRAWN	SLF/AF
CRP	#320922
HOR.	1'=40'
VERT.	N/A
DATE	01-23-04
DWG:	EC2
SHEET 7	OF 40

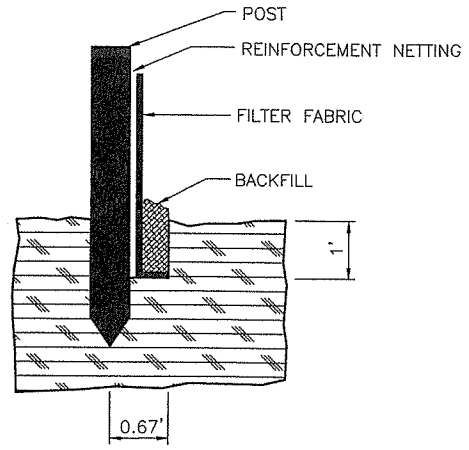

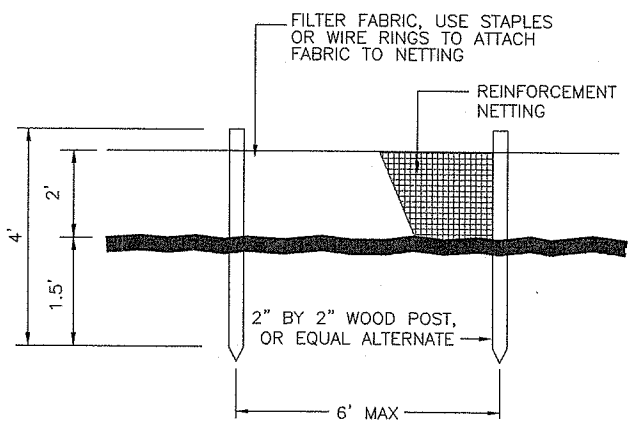

SILT FENCE INSTALLATION

NTS

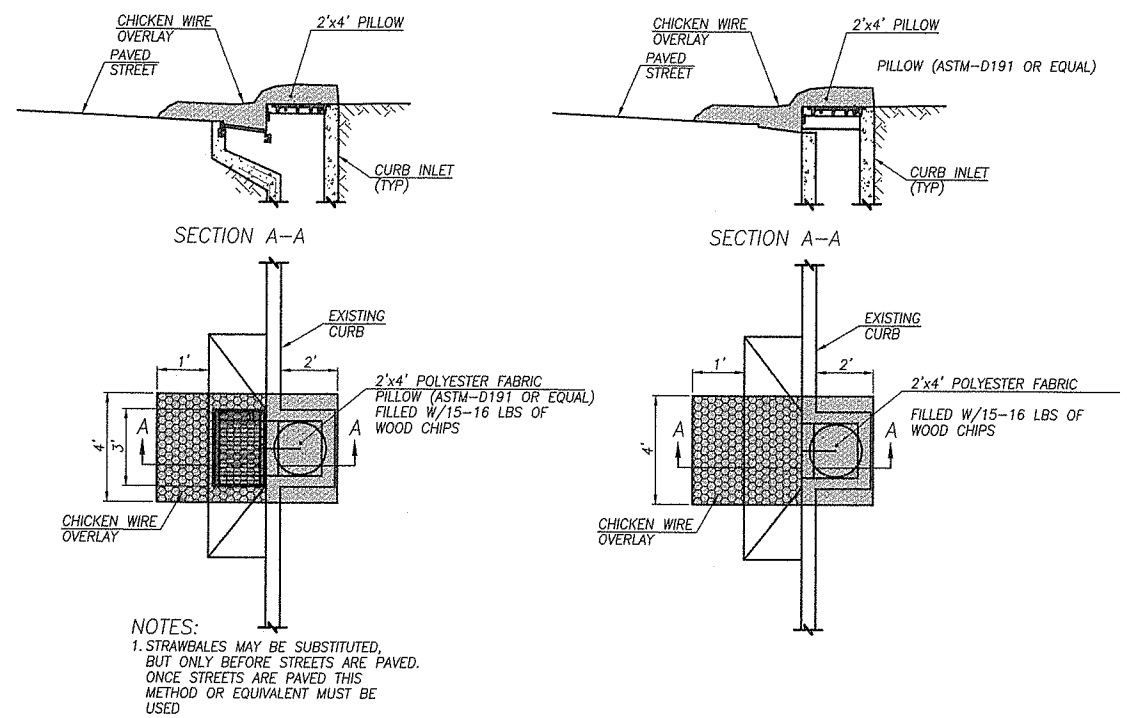

NOTES:
1. STRAWBALES MAY BE SUBSTITUTED, BUT ONLY BEFORE STREETS ARE PAVED. ONCE STREETS ARE PAVED THIS METHOD OR EQUIVALENT MUST BE USED

COMBINATION CURB INLET SILT BARRIER

NTS

CURB INLET SILT BARRIER

NTS

INLET PROTECTION

NTS

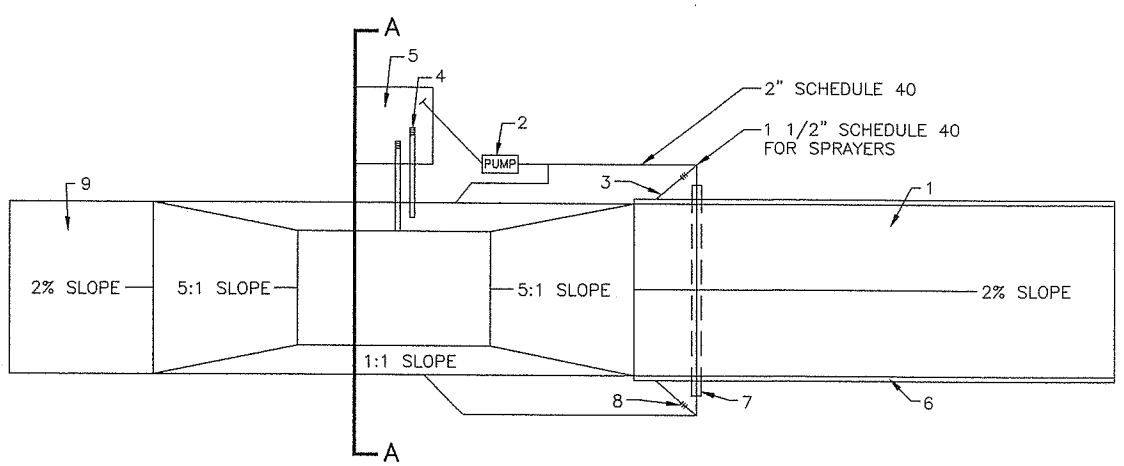

WHEEL WASH PLAN

NTS

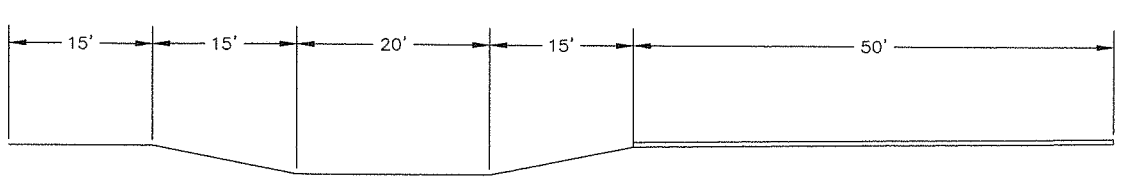

ELEVATION VIEW

NTS

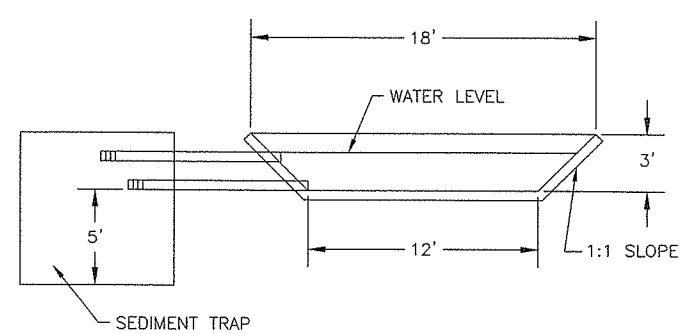

SECTION A–A

NTS

Recirculating Tire Wash Notes:
1. Asphalt construction entrance 6 in. asphalt concrete.
2. 3–inch trash pump with floats on the suction hose.
3. Midpoint spray nozzles, if needed.
4. 6–inch sewer pipe with butterfly valves. Bottom one is a drain. Locate top pipe's invert 1 foot above bottom of wheel wash.
5. 8 foot x 8 foot sump with 5 feet of catch. Build so can be cleaned with trackhoe.
6. Asphalt curb on the low road side to direct water back to pond.
7. 6–inch sleeve under road.
8. Ball valves.
9. 15 foot. asphalt concrete apron to protect ground from splashing water.
10. The recirculating tire wash plan is a general schematic. Details for the installation are left to the contractor. The tire wash must prevent tracking and recirculate the wash water to minimize water use.
11. The washes without pumps and spray bars are subject tp credit from minimum bid.

EROSION CONTROL NOTES:

1. The Contractor shall install and maintain BMPs as shown, and perform all actions necessary to prevent erosion and control sediment from leaving the construction site. The Contractor shall comply with Clark County Stormwater & Erosion Control Ordinance, CCC 13.29, Article IV, dated August 2000, Section 8-01 of the Washington Standard Specifications 2002 for Road, Bridge, and Municipal Construction, and Section 8 of the Special Provisions.

2. All erosion control measures shall be in-place and in working condition prior to disturbing and exposing any soil surfaces. (Erosion control measures shall include but are not limited to silt fence, construction entrance, tire wash, sedimentation barriers, sedimentation traps).

3. All erosion prevention and control BMP's shall be maintained and repaired as needed to ensure continued performance of their intended function. Needed repairs shall be made as soon as practicable or within 24 hours. They are to remain in place and operational during all phases of construction. Soil disturbing activities shall not continue or resume until repairs to erosion control facilities are made and the facilities are functional. Sediment leaving the site or discharging to a sensitive area shall be removed and the area restored.

4. Clearing and work area limits shall be delineated and marked so as to minimize the amount of area exposed to erosion, and to avoid disturbing more area than needed for construction requirements.

5. All sensitive or critical areas (wetlands, steep slopes, natural waterways) and buffers shall all be clearly delineated and protected from sediment deposition.

6. The Contractor shall prevent all sediment laden runoff from the construction site from entering all existing storm water catch basins, inlets, drywells, and perforated pipes affected by construction, and they shall be kept clean and operational.

7. Exposed, bare soils shall not remain unstabilized for more than two days during the period of October 1 through April 30, or for more than seven days during the period of May 1 through September 30. All disturbed soil surfaces shall be stabilized by a suitable application of BMPs.

8. Where feasible, no more than 500 feet of trench shall be open at one time. Excavated material shall be placed on the uphill side of trenches, provided it does not conflict with safety requirements.

9. Dewatering devices shall discharge into a sediment trap or sediment pond. No discharge shall be made to a paved street or stormwater collection system without the sediment first being removed.

10. Cut and fill slopes shall be constructed in a manner that will minimize erosion. Erosion shall be controlled and prevented by such measures as roughening the surface, installing interceptor ditches, terracing, covering with matting, mulching, or using plastic sheeting. Runoff shall be prevented from entering a slope and from undercutting the base of slopes. Straw matting on unseeded slopes 3:1 or steeper shall be held in place with jute netting or other suitable agent. On designated slopes steeper than 2:1, a hydraulically applied bonded matrix, such as Soil Guard or an approved equal, shall be applied by a qualified applicator per the manufacturer's instructions.

11. Any soil or debris transported onto roadways and sidewalks shall be removed. Deposits shall be completely removed by shoveling and/or sweeping. Washing shall not be utilized unless specifically approved by the County.

12. All permanent infiltration systems shall be isolated and protected from sediment laden runoff, to avoid risk of reducing the ability of the system to infiltrate. Isolation and protection shall not be removed until the contributing drainage area is completely functional and stabilized with permanent BMPs.

13. All conveyance channels, both temporary and permanent, shall be stabilized to prevent erosion of the channel. Stabilization shall extend to areas at outlets and downstream reaches vulnerable to erosion resulting from flow discharging from the channel.

14. If BMPs shown are utilized, but are insufficient to prevent sediment from reaching water bodies, adjacent properties, or public rights-of-way, additional BMP's shall be implemented immediately to prevent further encroachment of sediment.

15. Stabilized areas shall be provided for employee parking and storage of construction materials. Erodeable stockpiles of earthen materials, such as topsoil, silty and clayey soils, and landscape materials, shall be covered when not being incorporated into the work. Erosion control BMP's shall be utilized as necessary to prevent sediment laden runoff from leaving or sediment being transported from these areas from vehicular activity.

16. All pollutants other than sediment, that occur during construction, shall be controlled and disposed of in a manner that does not cause contamination of stormwater.

17. The Contractor shall keep an inspection log of the condition of the erosion control facilities. Erosion control facilities shall be inspected at least weekly and after each rainfall event or any winds greater than 50 miles per hour. The inspection log shall be kept at the project site, at a designated location, and shall be available for review by the County. An individual that has successfully completed the County's Erosion Control Certification course shall perform inspections and maintain the log.

18. All temporary BMPs shall be removed within 30 days after site stabilization is achieved. Trapped sediment shall be deposited and stabilized on site. Disturbed areas, resulting from the removal, shall be permanently stabilized.

19. Construction shall not be considered complete and acceptable until all disturbed soil surfaces have been protected from erosion with permanent landscaping, covered with impervious surfaces, restored to original condition, or permanently stabilized.

20. Vegetated stabilization and landscaping shall be fertilized, watered, and maintained to ensure that growth of vegetation is established and sustained.

DESIGNED	SLF
DRAWN	SLF/BY
CRP	#320922
HOR.	N/A
VERT.	N/A
DATE	01-23-04
DWG:	EC3
SHEET 8	OF 40

CALL 48 HOURS BEFORE YOU DIG
1-800-553-4344
"It's the Law"
NORTHWEST UTILITIES NOTIFICATION CENTER

STATE OF WASHINGTON
DONALD J. MOSER
22994
REGISTERED PROFESSIONAL ENGINEER
1-27-04
EXPIRES: JUNE 22, 2004

DESIGN & ENGINEERING DIVISION
DESIGN SECTION

NE 76TH STREET
EROSION CONTROL DETAILS

proud past, promising future
CLARK COUNTY
WASHINGTON

DATE PLOTTED: Jan 27, 2004 – 9:44am M&S DRAWING FILE: W:\DWG\13500\13573\Final Design\13573EC3-4.dwg

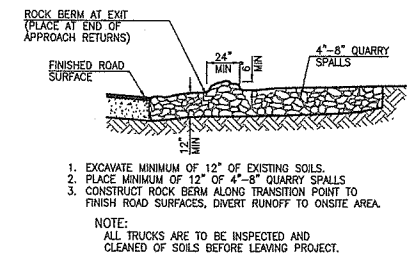

1. EXCAVATE MINIMUM OF 12" OF EXISTING SOILS.
2. PLACE MINIMUM OF 12" OF 4"-8" QUARRY SPALLS
3. CONSTRUCT ROCK BERM ALONG TRANSITION POINT TO FINISH ROAD SURFACES, DIVERT RUNOFF TO ONSITE AREA.

NOTE:
ALL TRUCKS ARE TO BE INSPECTED AND CLEANED OF SOILS BEFORE LEAVING PROJECT.

SECTION A-A

NTS

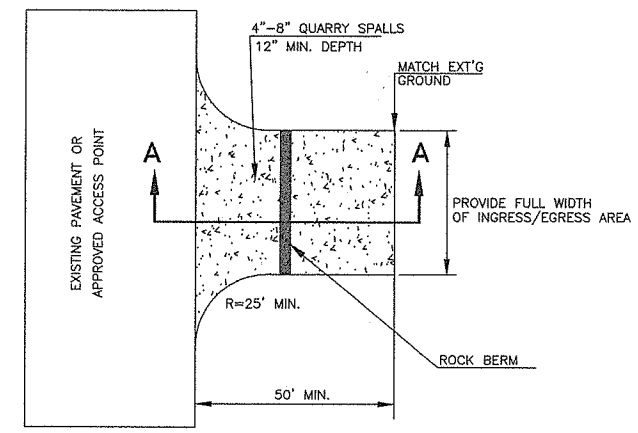

TEMPORARY CONSTRUCTION ENTRANCE

N.T.S.

DESIGNED SLF
DRAWN SLF/BY
CRP #320922
HOR. N/A
VERT. N/A
DATE 01-23-04
DWG: EC4
SHEET 9 OF 40

CALL 48 HOURS BEFORE YOU DIG
1-800-553-4344
"It's the Law"
NORTHWEST UTILITIES NOTIFICATION CENTER

RONALD L. MOSER
STATE OF WASHINGTON
22994
REGISTERED PROFESSIONAL ENGINEER
7-27-04
EXPIRES: JUNE 22, 2004

DESIGN & ENGINEERING DIVISION
DESIGN SECTION

NE 76TH STREET
EROSION CONTROL DETAILS

proud past, promising future
CLARK COUNTY
WASHINGTON

DATE PLOTTED: Jan 27, 2004 - 9:42am MAS DRAWING FILE: W:\DWG\13500\13573\Final Design\13573EC3-4.dwg

(14) STA 0+85, 6.5' RT
PRECAST CONC. DRYWELL
IE 10" IN (E)= 194.20
IE 24" IN (N)= 194.20
IE 24" OUT (S)= 194.00
RIM EL= 208.50
BOTTOM EL= 190.00

(15) STA 1+07, 6.5' RT
PRECAST CONC. DRYWELL
IE 10" IN (E)= 194.20
IE 24" IN (N)= 193.89
IE 24" OUT (S)= 193.89
RIM EL= 208.50
BOTTOM EL= 190.00

(16) STA 1+44, 6.5' RT
PRECAST CONC. DRYWELL
IE 24" IN (N)= 193.71
IE 24" OUT (S)= 193.71
IE 24" OUT (E)= 193.71
RIM EL= 208.50
BOTTOM EL= 190.00

(17) STA 1+94, 6.5' RT
PRECAST CONC. DRYWELL
IE 24" IN (N)= 193.46
IE 24" OUT (E)= 193.46
RIM EL= 208.70
BOTTOM EL= 190.00

(18) STA 1+94, 5.5' LT
PRECAST CONC. DRYWELL
IE 24" IN (W)= 193.40
IE 24" OUT (N)= 193.40
RIM EL= 208.70
BOTTOM EL= 190.00

(19) STA 1+44, 5.5' LT
PRECAST CONC. DRYWELL
IE 24" IN (S)= 193.15
IE 24" IN (W)= 193.65
IE 24" OUT (N)= 193.15
RIM EL= 208.50
BOTTOM EL= 190.00

(20) STA 1+17, 5.5' LT
PRECAST CONC. DRYWELL
IE 24" IN (S)= 193.01
RIM EL= 208.50
BOTTOM EL= 190.00

SCALE IN FEET
10 0 10 20

SAWCUT LINE
CEM CONC BARRIER CURB
EOP 208.35
REMOVE EXIST TREES
PROPOSED EDGE OF PAVEMENT
EOP 208.43
EOP 208.37
TC 208.65
TC 208.54
TC 208.81
TC 208.63
TC 208.52
TC 208.46
1+00
14+00
NE 76TH STREET
NE 100TH AVENUE
Ex. 6" Stm
SAN
MB
SVS

STA 0+64, 6.5' RT
PRECAST CONC. DRYWELL
IE 18" IN (E)= 194.45
IE 24" OUT (S)= 194.31
RIM EL= 208.50
BOTTOM EL= 190.00

67 LF 18" STM PIPE
SL= 0.003

8'x 16' PRECAST
STORMFILTER VAULT W/ 23
LEAF COMPOST CARTRIDGES
IE 10" IN (N)=195.70
IE 10" OUT (W)=194.24
RIM EL= 208.50

6'x 12' PRECAST
STORMFILTER VAULT W/ 11
LEAF COMPOST CARTRIDGES
IE 10" IN (N)=196.54
IE 10" OUT (W)=194.24
IE 10" OUT (S)=195.70
RIM EL= 208.50

STA 0+64, 3.0' LT– 60" CATCH BASIN
(TYPE 2), W/ MANHOLE RING AND
LOCKING LID, FLOW CONTROL STRUCTURE
IE 18" IN (N)= 196.58
IE 18" OUT (W)= 194.50
IE 10" OUT (S)= 196.58
RIM EL= 208.50
BOTTOM EL= 189.38

MH # 1
SEE DWG DP4
ON SHEET 28

(1) 10 LF 18" STM PIPE SL= 0.005
(2) 5 LF 10" STM PIPE SL= 0.007
(3) 5 LF 10" STM PIPE SL= 0.007
(4) 5 LF 10" STM PIPE SL= 0.000
(5) 5 LF 10" STM PIPE SL= 0.007
(6) 21 LF 24" UNDERDRAIN PIPE. SL= 0.005 SEE DETAIL ON DWG D02 ON SHEET 13.
(7) 22 LF 24" UNDERDRAIN PIPE. SL= 0.005 SEE DETAIL ON DWG D02 ON SHEET 13.
(8) 37 LF 24" UNDERDRAIN PIPE. SL= 0.005 SEE DETAIL ON DWG D02 ON SHEET 13.
(9) 50 LF 24" UNDERDRAIN PIPE. SL= 0.005 SEE DETAIL ON DWG D02 ON SHEET 13.
(10) 12 LF 24" UNDERDRAIN PIPE. SL= 0.005 SEE DETAIL ON DWG D02 ON SHEET 13.
(11) 50 LF 24" UNDERDRAIN PIPE. SL= 0.005 SEE DETAIL ON DWG D02 ON SHEET 13.
(12) 12 LF 24" UNDERDRAIN PIPE. SL= 0.005 SEE DETAIL ON DWG D02 ON SHEET 13.
(13) 27 LF 24" UNDERDRAIN PIPE. SL= 0.005 SEE DETAIL ON DWG D02 ON SHEET 13.

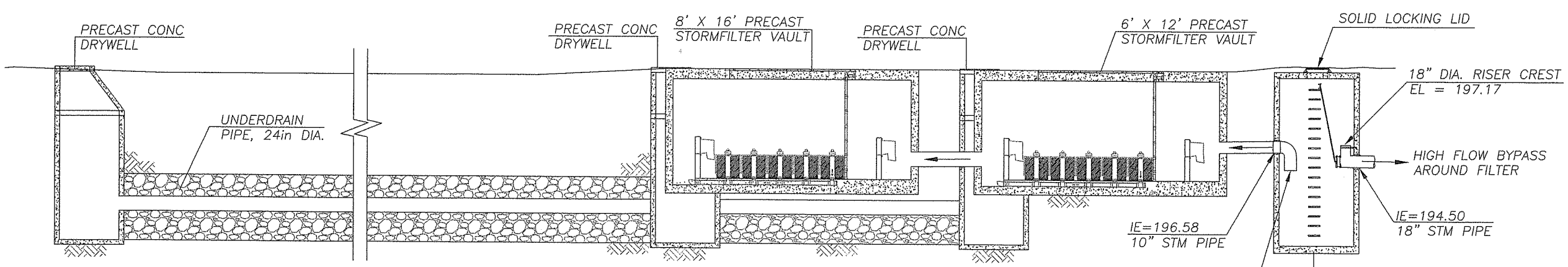

SECTION A–A

DESIGNED SLF
DRAWN SLF
CRP #320922
HOR. 1"=10'
VERT. 1"=5'
DATE 01-23-04
DWG: SWF1
SHEET 10 OF 40

CALL 48 HOURS BEFORE YOU DIG 1-800-553-4344 "It's the Law" NORTHWEST UTILITIES NOTIFICATION CENTER

STATE OF WASHINGTON MOE ZAWALD 22994 REGISTERED PROFESSIONAL ENGINEER
EXPIRES: JUNE 22, 2004

DESIGN & ENGINEERING DIVISION
DESIGN SECTION

NE 76TH STREET
STORMWATER FACILITY

proud past, promising future
CLARK COUNTY WASHINGTON

DATE PLOTTED: Jan 23, 2004 – 3:39pm MAS DRAWING FILE: W:\DWG\13500\13573\Final Design\13573SWF1.dwg

GENERAL NOTES

1.) STORMFILTER BY STORMWATER MANAGEMENT, PORTLAND, OREGON (503-240-3393).
2.) ALL STORMFILTERS REQUIRE REGULAR MAINTENANCE. REFER TO OPERATION AND MAINTENANCE GUIDELINES FOR DETAILS.
3.) PRECAST CONCRETE VAULT TO BE CONSTRUCTED IN ACCORDANCE WITH ASTM C858.
4.) INLET AND OUTLET PIPING TO BE SPECIFIED BY ENGINEER AND PROVIDED BY CONTRACTOR.
5.) ANTI-FLOATATION BALLAST TO BE SPECIFIED BY ENGINEER. BALLAST TO BE SET ALONG ENTIRE LENGTH OF BOTH SIDES OF VAULT. BALLAST MATERIALS TO BE PROVIDED BY CONTRACTOR.
6.) PRECAST STORMFILTER EQUIPPED WITH KNOCKOUTS AT ALT. INLET/OUTLET LOCATIONS. CORINGS AVAILABLE WHEN SPECIFIED.
7.) DETAIL REFLECTS DESIGN INTENT ONLY. ACTUAL VAULT DIMENSIONS AND CONFIGURATION WILL BE SHOWN ON THE PRODUCTION SHOP DRAWING.

UPSTREAM STORMFILTER™

6' X 12' PRECAST STORMFILTER™ DATA

DESIGN WATER QUALITY FLOW (cfs)			1.13
PEAK FLOW (cfs)			2.50
RETURN PERIOD OF PEAK FLOW (yrs)			100
# OF CARTRIDGES REQUIRED			11
MEDIA TYPE			COMPOST
(In-Out)=2.3' Min.	I.E.	MATERIAL	DIAMETER
INLET PIPE #1	196.54		10"
INLET PIPE #2			
OUTLET PIPE	195.70		10"

RIM ELEVATION(S): 1 = 208.50, 4 = 208.50, 2 = 208.50, 3 = 208.50 (FLOW)

DOOR OPENING DIRECTION: (FACING DOWNSTREAM – SEE FIGURE ABOVE) EXAMPLE: '2 TO 1' OR '1 TO 2.'

ADJUSTABLE LID		YES/NO
LADDER		(YES)/NO
ANTI-FLOATATION BALLAST (USE N/A IF NOT REQUIRED)	WIDTH	HEIGHT
	N/A	N/A

NOTES/SPECIAL REQUIREMENTS:

STORMFILTER VAULTS SHALL HAVE ACCESS DOORS INSTEAD OF MANHOLE STYLE ACCESS.

DOWNSTREAM STORMFILTER™

8' X 16' PRECAST STORMFILTER™ DATA

DESIGN WATER QUALITY FLOW (cfs)			1.13
PEAK FLOW (cfs)			2.50
RETURN PERIOD OF PEAK FLOW (yrs)			100
# OF CARTRIDGES REQUIRED			23
MEDIA TYPE			COMPOST
(In-Out)=2.3' Min.	I.E.	MATERIAL	DIAMETER
INLET PIPE #1	195.70		10"
INLET PIPE #2			
OUTLET PIPE	194.24		10"

RIM ELEVATION(S): 1 = 208.50, 4 = 208.50, 2 = 208.50, 3 = 208.50 (FLOW)

DOOR OPENING DIRECTION: (FACING DOWNSTREAM – SEE FIGURE ABOVE) EXAMPLE: '2 TO 1' OR '1 TO 2.'

ADJUSTABLE LID		YES/NO
LADDER		(YES)/NO
ANTI-FLOATATION BALLAST (USE N/A IF NOT REQUIRED)	WIDTH	HEIGHT
	N/A	N/A

NOTES/SPECIAL REQUIREMENTS:

STORMFILTER VAULTS SHALL HAVE ACCESS DOORS INSTEAD OF MANHOLE STYLE ACCESS.

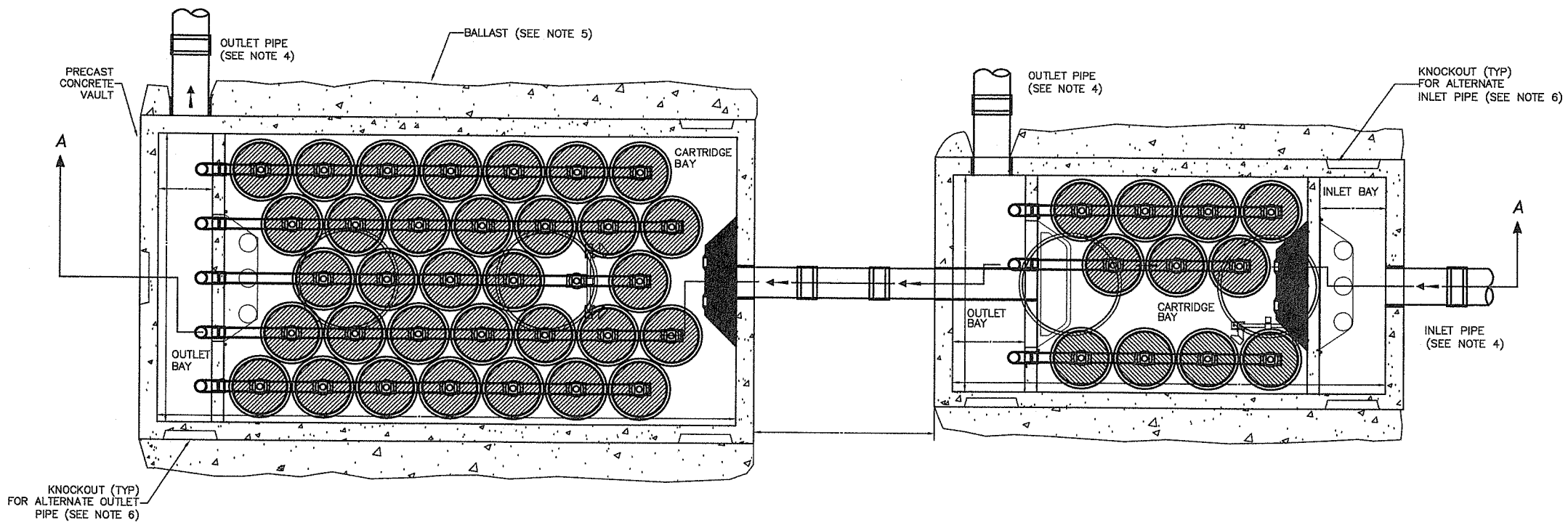

6'x12' / 8'x16' PRECAST STORMFILTERS® IN SERIES – PLAN VIEW (1/1)
SCALE: N.T.S.

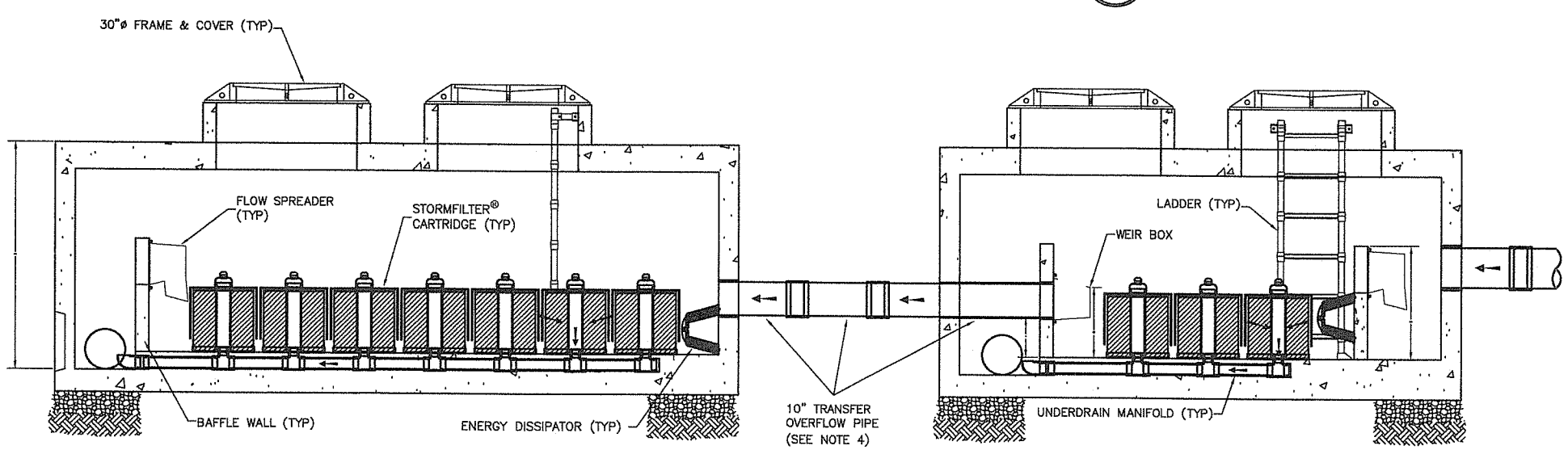

6'x12' / 8'x16' PRECAST STORMFILTERS® IN SERIES – SECTION VIEW (A–A / 1)
SCALE: N.T.S.

The STORMWATER MANAGEMENT StormFilter™ U.S. PATENT No. 5,322,629, No. 5,634,576, AND OTHER U.S. AND FOREIGN PATENTS PENDING

STORMWATER MANAGEMENT INC.

6'x12' / 8'x16' PRECAST STORMFILTERS® IN SERIES
PLAN AND SECTION VIEW
STANDARD DETAIL

PROJECT NO.
SCALE: AS SHOWN
DRAWING FILE NAME: SF6x12_8x16.DWG

DESIGNED BY: ARG CHECKED BY: CHECK DATE:
DRAWN BY: ARG APPROVED BY: APPR. DATE:

DATE	BY	REVISION	CKD	APPR.

SHEET 1/1 — 1

PLOT DATE: 03/08/02
LAST EDIT: ARG

DESIGNED N/A
DRAWN N/A
CRP #320922
HOR. N/A
VERT. N/A
DATE 01-23-04
DWG. SWF2
SHEET 11 OF 40

CALL 48 HOURS BEFORE YOU DIG 1-800-553-4344 "It's the Law" NORTHWEST UTILITIES NOTIFICATION CENTER

STATE OF WASHINGTON — DONALD J. MOSER — 22994 — REGISTERED PROFESSIONAL ENGINEER — 7-27-04 — EXPIRES: JUNE 22, 2004

DESIGN & ENGINEERING DIVISION
DESIGN SECTION

NE 76TH STREET
STORMWATER FACILITY DETAILS

proud past, promising future
CLARK COUNTY WASHINGTON

DATE PLOTTED: Jan 27, 2004 – 9:47am M&S DRAWING FILE: W:\DWG\13500\13573\Final Design\13573SWF2.dwg

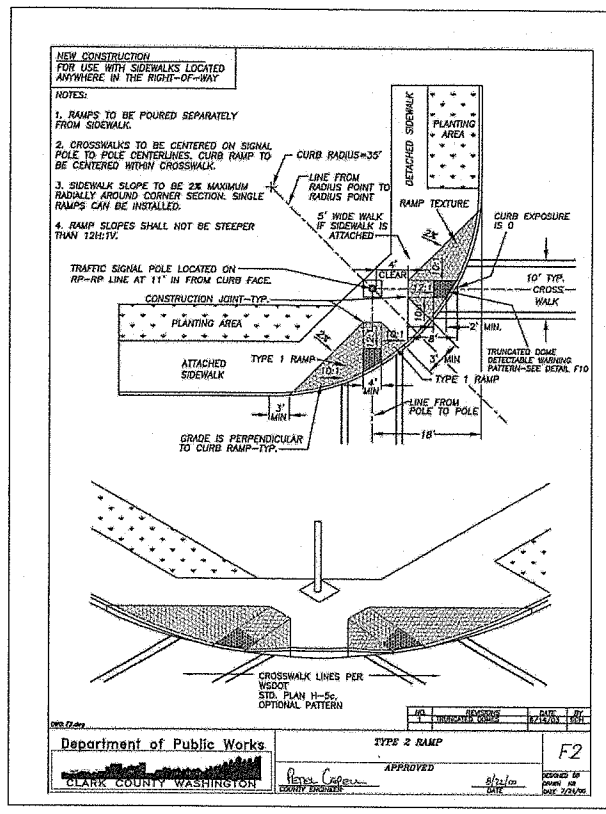

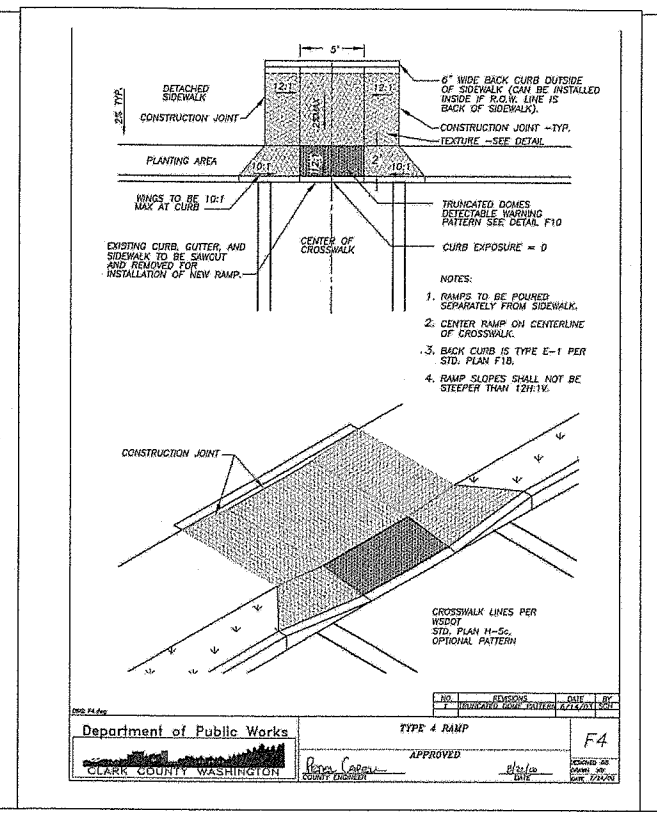

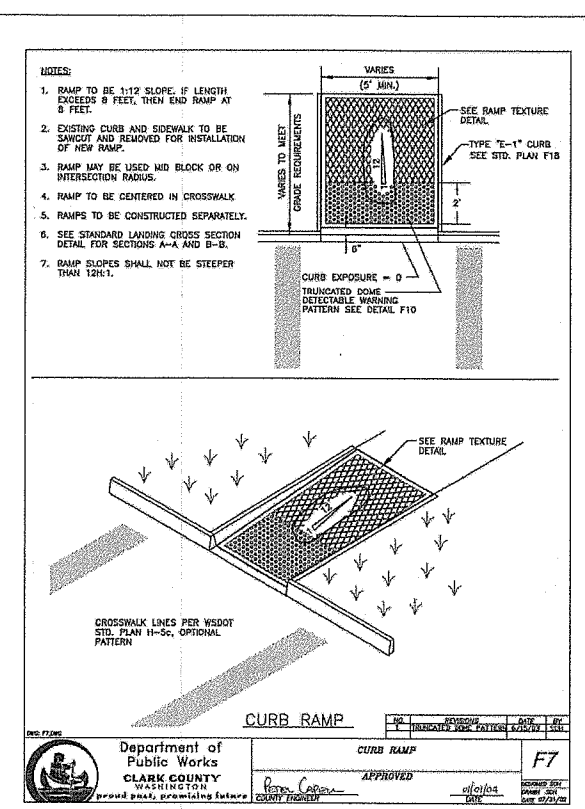

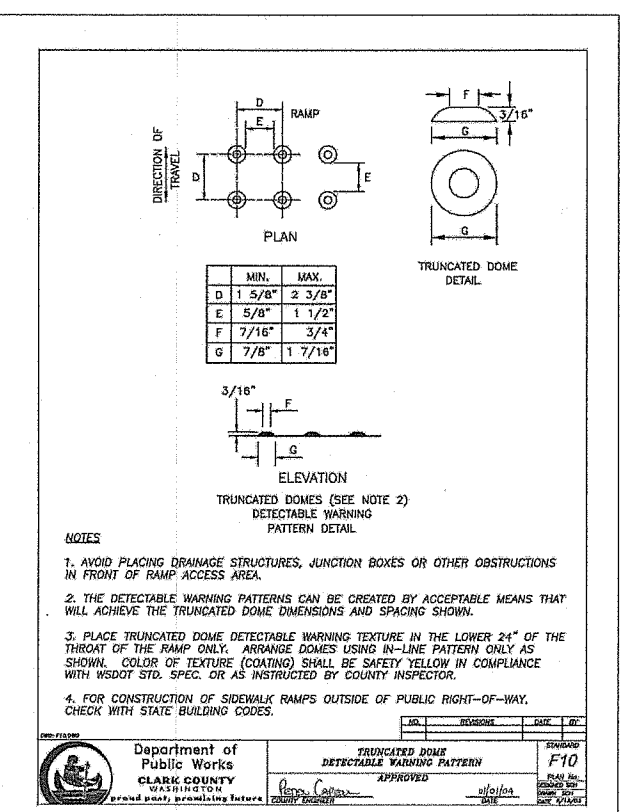

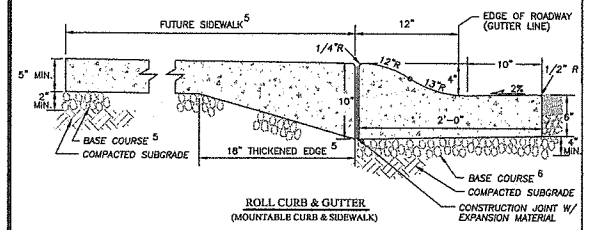

NOTES

1. CONCRETE SHALL BE 3000 PSI MIN. (CLASS 3000) 3 1/2" SLUMP (MAX.)
2. CURBS ADJACENT TO PAVEMENT OR SIDEWALK TO HAVE EXPANSION AND/OR CONTRACTION JOINTS TO MATCH EXISTING PATTERNS.
3. 3/8" EXPANSION JOINTS TO BE PROVIDED AT EACH POINT OF TANGENCY OF THE CURB, COLD JOINTS, EACH SIDE OF INLET STRUCTURES AND DRIVEWAYS. MATERIAL TO BE PRE-MOLDED, ASPHALT IMPREGNATED AND NON EXTRUDING.
4. CONTRACTION JOINT SPACING NOT TO EXCEED 15 FEET. THE DEPTH OF THE JOINT SHALL BE AT LEAST 1-1/2 INCHES.
5. THICKENED EDGE SIDEWALK SHALL BE PLACED ON 2" (MIN.) CRUSHED AGGREGATE (5/8"-0). SUBGRADE AND BASE COURSE COMPACTED TO 95% MAX. DRY DENSITY. (FUTURE)
6. BASE COURSE UNDER ROLL CURB & GUTTER SHALL BE TO SUBGRADE OF STREET SECTION OR 4 INCHES, WHICHEVER IS GREATER, AND SHALL EXTEND 6" BEHIND THE CURB.
7. CURB DRAINS ARE TO BE AVOIDED WITH ROLL CURB & GUTTER. THE AVAILABILITY OF CONNECTION TO AN EXISTING OR ALTERNATIVE DRAINAGE SYSTEM MUST BE EXHAUSTED BEFORE CURB DRAINS WILL BE CONSIDERED. SEE STD. PLAN 18C FOR ROLLED CURB PENETRATION DETAIL FOR ROOF AND FOOTING DRAINS.
8. CURB TO BE BRUSH FINISHED. ALL EXISTING EDGES SHALL BE SAWCUT.
9. USE OF ROLL CURB & GUTTER WITH COMMERCIAL DRIVEWAYS WILL REQUIRE REINFORCING STEEL (6"x6"x10 GA. MESH) MIN. 3" COVER.

Department of Public Works
CLARK COUNTY WASHINGTON
proud past, promising future
CONCRETE ROLL CURB & GUTTER (MOUNTABLE CURB & SIDEWALK)
APPROVED
STANDARD 18b

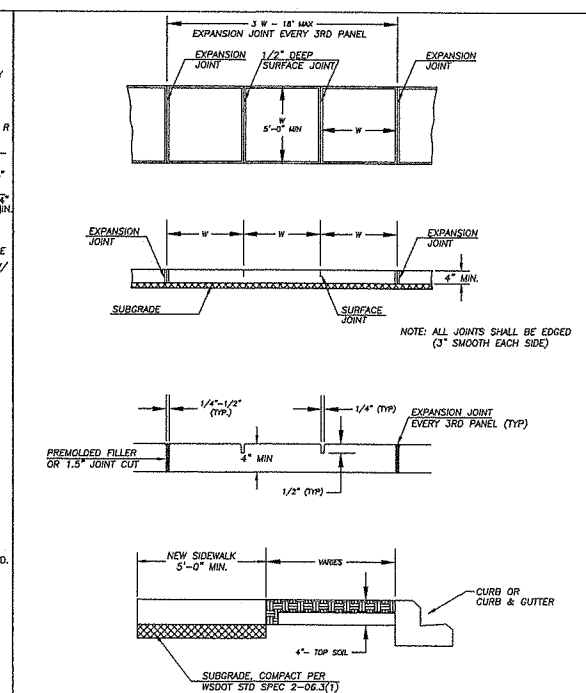

Department of Public Works
CLARK COUNTY WASHINGTON
proud past, promising future
SIDEWALK DETAIL
APPROVED
12

NOTES:

A MINIMUM 3' WIDE ACCESSIBLE ROUTE SHALL BE MAINTAINED IN ALL PEDESTRIAN ACCESSIBLE AREAS.

CONTRACTION POINTS SHALL BE PLACED ALONG SIDEWALKS IN ACCORD WITH SIDEWALK DETAIL. ALL JOINTS SHALL BE CLEANED AND EDGED.

CHANGES IN LEVEL UP TO 1/4" MAY BE VERTICAL AND WITHOUT EDGE TREATMENT. CHANGES IN LEVEL BETWEEN 1/4" AND 1/2" SHALL BE BEVELED WITH A SLOPE NO GREATER THAN 2:1.

CEMENT CONCRETE APPROACHES SHALL BE CONSTRUCTED OF AIR-ENTRAINED CLASS 3000 AND MAY BE POURED INTEGRAL WITH CURB (3 DAY MIX).

EXISTING CURB, GUTTER, AND SIDEWALK TO BE SAWCUT AND REMOVED FOR INSTALLATION OF APPROACH.

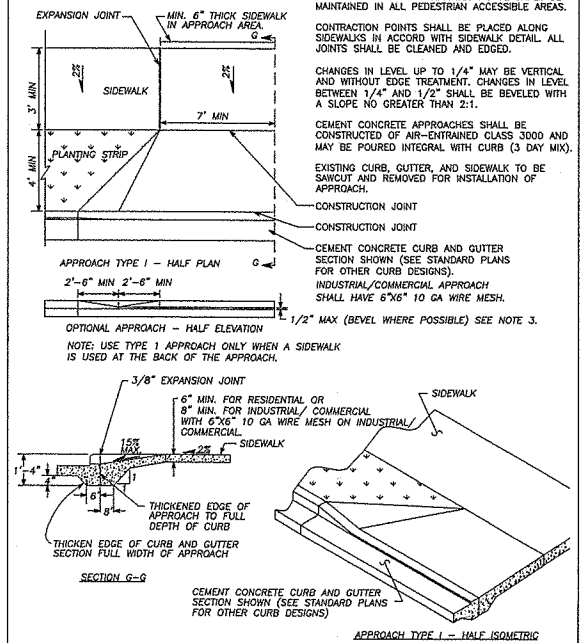

Department of Public Works
CLARK COUNTY WASHINGTON
proud past, promising future
DETAIL - TYPE 1 CEMENT CONCRETE APPROACH
APPROVED
14

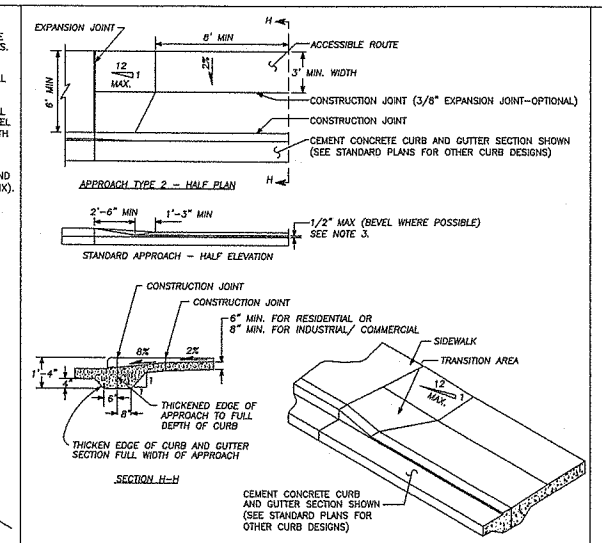

NOTES:

1. A MINIMUM 3' WIDE ACCESSIBLE ROUTE SHALL BE MAINTAINED IN ALL PEDESTRIAN ACCESSIBLE AREAS.
2. CONTRACTION JOINTS SHALL BE PLACED ALONG SIDEWALKS IN ACCORD WITH SIDEWALK DETAIL. ALL JOINTS SHALL BE CLEANED AND EDGED.
3. CHANGES IN LEVEL UP TO 1/4" MAY BE VERTICAL AND WITHOUT EDGE TREATMENT. CHANGES IN LEVEL BETWEEN 1/4" AND 1/2" SHALL BE BEVELED WITH A SLOPE NO GREATER THAN 2:1.
4. CEMENT CONCRETE APPROACHES SHALL BE CONSTRUCTED OF AIR-ENTRAINED CONCRETE CLASS 3000 AND MAY BE POURED INTEGRAL WITH CURB (3 DAY MIX).
5. EXISTING CURB, GUTTER AND SIDEWALK TO BE SAWCUT AND REMOVED FOR INSTALLATION OF APPROACH.

Department of Public Works
CLARK COUNTY WASHINGTON
proud past, promising future
CEMENT CONCRETE APPROACH DETAIL - TYPE 2
APPROVED
15

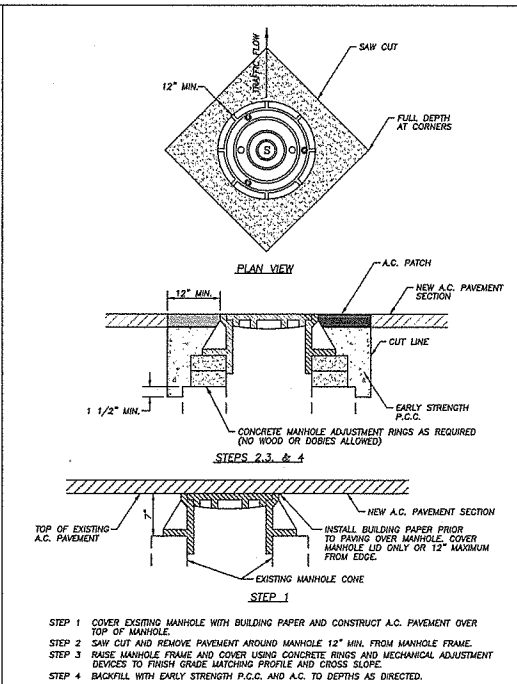

STEP 1 COVER EXISTING MANHOLE WITH BUILDING PAPER AND CONSTRUCT A.C. PAVEMENT OVER TOP OF MANHOLE.
STEP 2 SAW CUT AND REMOVE PAVEMENT AROUND MANHOLE 12" MIN. FROM MANHOLE FRAME.
STEP 3 RAISE MANHOLE FRAME AND COVER USING CONCRETE RINGS AND MECHANICAL ADJUSTMENT DEVICES TO FINISH GRADE MATCHING PROFILE AND CROSS SLOPE.
STEP 4 BACKFILL WITH EARLY STRENGTH P.C.C. AND A.C. TO DEPTHS AS DIRECTED.

Department of Public Works
CLARK COUNTY WASHINGTON
proud past, promising future
MANHOLE ADJUSTMENT DETAIL
APPROVED
A14

DESIGNED SLF
DRAWN SLF/BY/JP
CRP #320922
HOR. N/A
VERT. N/A
DATE 01-23-04
DWG: D01
SHEET 12 OF 40

CALL 48 HOURS BEFORE YOU DIG
1-800-553-4344
"It's the Law"
NORTHWEST UTILITIES NOTIFICATION CENTER

REGISTERED PROFESSIONAL ENGINEER
STATE OF WASHINGTON
22394
EXPIRES: JUNE 22, 2004

DESIGN & ENGINEERING DIVISION
DESIGN SECTION

NE 76TH STREET
ROADWAY DETAILS

proud past, promising future
CLARK COUNTY WASHINGTON

DATE PLOTTED: Jan 27, 2004 - 8:48am MAS DRAWING FILE: M:\DWG\12000\12370\Final Design\12370D01-2.dwg

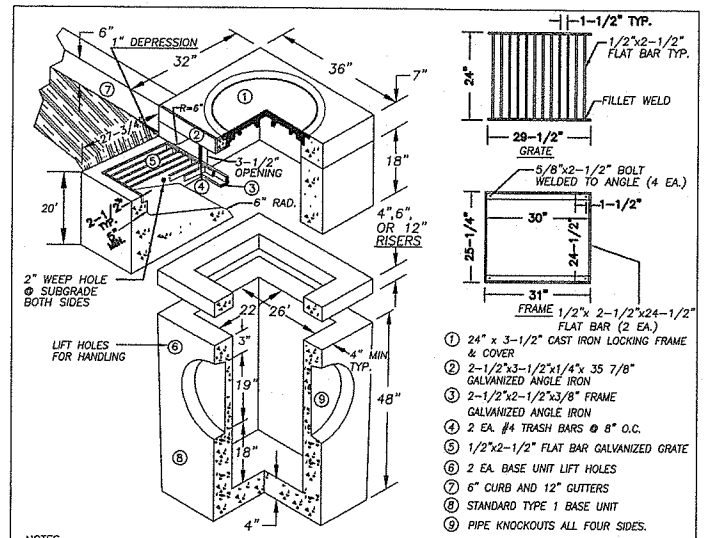

1. 24" x 3-1/2" CAST IRON LOCKING FRAME & COVER
2. 2-1/2"x3-1/2"x1/4"x 35 7/8" GALVANIZED ANGLE IRON
3. 2-1/2"x2-1/2"x3/8" FRAME GALVANIZED ANGLE IRON
4. 2 EA. #4 TRASH BARS @ 8" O.C.
5. 1/2"x2-1/2" FLAT BAR GALVANIZED GRATE
6. 2 EA. BASE UNIT LIFT HOLES
7. 6" CURB AND 12" GUTTERS
8. STANDARD TYPE 1 BASE UNIT
9. PIPE KNOCKOUTS ALL FOUR SIDES.

NOTES

1. COMBINATION CURB INLET TO BE CONSTRUCTED IN ACCORDANCE WITH ASTM C478 & C890 UNLESS SHOWN ON PLANS OR NOTED IN STANDARD SPECIFICATIONS.
2. REINFORCING FOR INLET UNIT, 3 EA. #4 HORZONTAL BARS; REINFORCING FOR TOP UNIT, 2 EA. #3 HORZONTAL BARS; REINFORCING FOR INLET SLOPED BASE, 4x4 MESH.
3. ALL REBAR TO MEET ASTM A615 GRADE 60.
4. AS AN ACCEPTABLE ALTERNATIVE TO REBAR, WELDED WIRE FABRIC HAVING A MIN. AREA OF 0.12 SQAURE INCHES PER FOOT MAY BE USED. WELDED WIRE FABRIC SHALL COMPLY TO ASTM A497. WIRE FABRIC SHALL NOT BE PLACED IN KNOCKOUTS.
5. ALL REINFORCED CAST-IN-PLACE CONCRETE SHALL BE CLASS 4,000.
6 PRECAST BASES SHALL BE FURNISHED WITH CUTOUTS OR KNOCKOUTS. KNOCKOUTS SHALL HAVE A WALL THICKNESS OF 2" MIN. ALL PIPE SHALL BE INSTALLED IN FACTORY PROVIDED KNOCKOUTS. UNUSED KNOCKOUTS NEED NOT BE GROUTED IF WALL IS LEFT INTACT.
7. KNOCKOUTS OR CUTOUT HOLE SIZE IS EQUAL TO PIPE OUTER DIAM. PLUS INLET WALL THICKNESS.
8. ROUND KNOCKOUTS MAY BE ON ALL 4 SIDES WITH MAX. DIAM. OF 17".
9. THE MAX. DEPTH FROM THE FINISHED GRADE TO THE PIPE INVERT IS 5'-0".
10. ANY PROTUDING ENDS OF PIPES SHALL BE TRIMMED FLUSH WITH THE INSIDE WALLS AND GROUTED TO THE SATISFACTION OF ENGINEER.
11. GRATE TO HAVE 1" DEPRESSION AT GUTTER INLET WITH GUTTER TO BE TAPERED DOWN TO INLET.
12. INSTALL REMOVABLE APWA TYPE 60A TRAP OR EQUAL, SEE STD. PLAN D2.1.
13. CONTRACTOR SHALL HAVE THE OPTION OF FURNISHING PRECAST OR CAST-IN-PLACE INLET STRUCTURES, UNLESS SPECIFIED.

NO.	REVISIONS	DATE	BY

DWG: D3-0.DWG

Department of Public Works
CLARK COUNTY
WASHINGTON
proud past, promising future

STANDARD TYPE 1 COMBINATION CURB INLET

APPROVED

COUNTY ENGINEER DATE

STANDARD D3.0
PLAN No.
DESIGNED SGH
DRAWN SGH
DATE 09/06/02

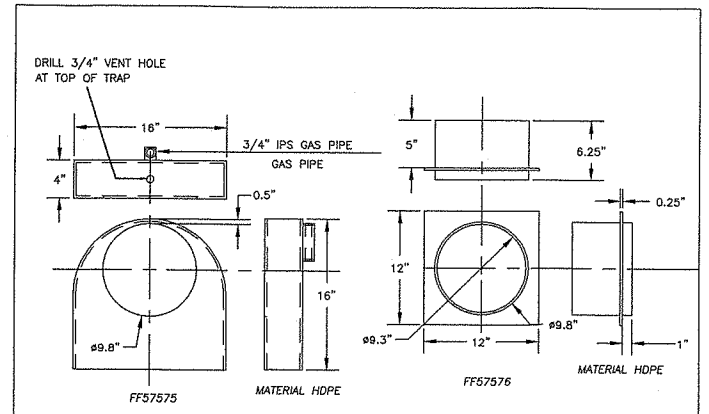

LOW PROFILE ELBOW

NTS

ELBOW INSERT

NTS

ZYMARK BRAND OR EQUIVALENT

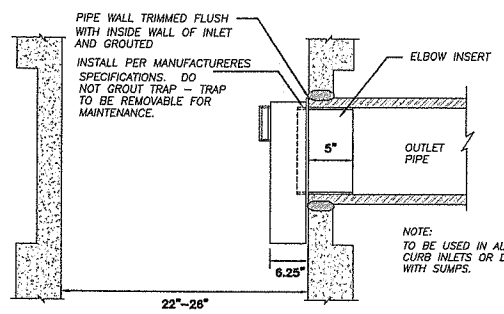

NOTE:
TO BE USED IN ALL CATCH BASINS, CURB INLETS OR DITCH INLETS WITH SUMPS.

NO.	REVISIONS	DATE	BY

DWG: D2-1.DWG

Department of Public Works
CLARK COUNTY
WASHINGTON
proud past, promising future

CATCH BASIN OUTLET PIPE TRAP

APPROVED

COUNTY ENGINEER DATE

STANDARD D2.1
PLAN No.
DESIGNED SGH
DRAWN SGH
DATE 09/23/02

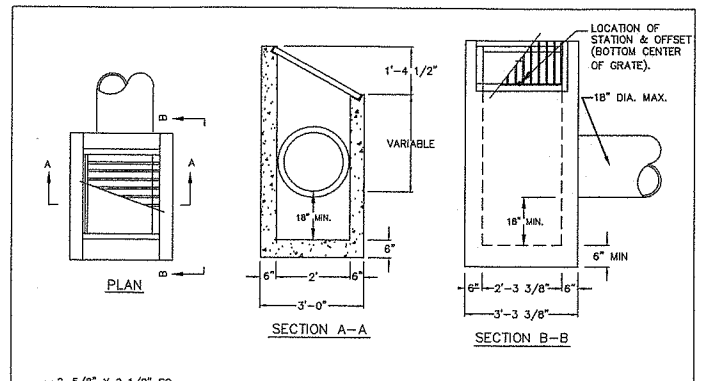

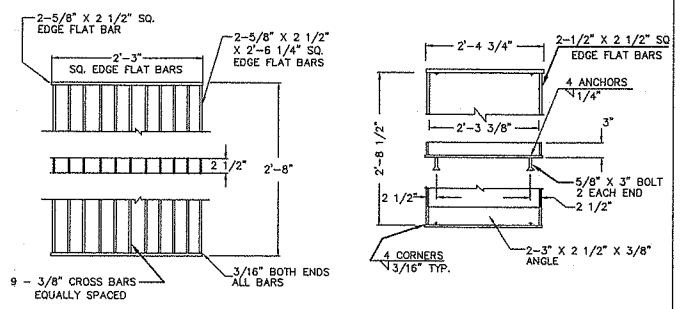

NOTES:

1. DITCH INLET CONSTRUCTION IN ACCORDANCE WITH ASTM C-478
2. CATCH BASIN, FRAME, AND GRATES SHALL BE FLAT BAR STEEL OR APPROVED EQUAL.
3. INSIDE FRAME DIMENSIONS: 2'-3 3/8"x 2'-8 1/2"".
4. 3/8" CROSS BARS SHALL BE FLUSH WITH THE GRATE SURFACE AND MAY BE FILLET WELDED, RESISTANCE WELDED OR ELECTROFORGED TO BEARING BARS.

NO.	REVISIONS	DATE	BY

DWG: D5.DWG

Department of Public Works
CLARK COUNTY
WASHINGTON
proud past, promising future

DITCH INLET

APPROVED

COUNTY ENGINEER DATE

STANDARD D6
PLAN No.
DESIGNED SGH
DRAWN SGH
DATE 09/17/02

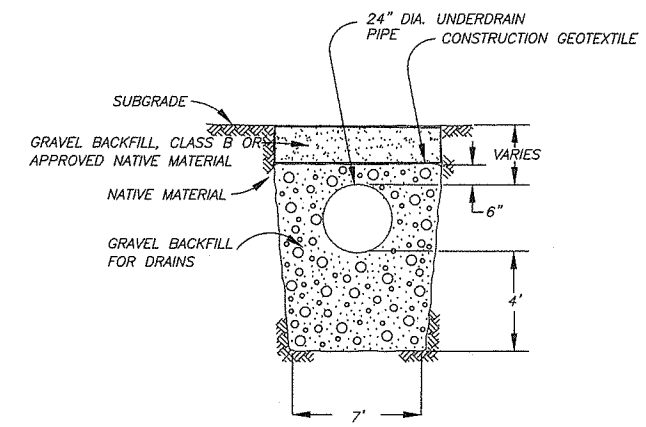

UNDERDRAIN PIPE DETAIL

NTS

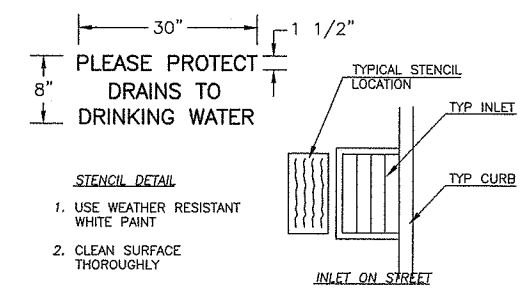

STENCIL DETAIL

1. USE WEATHER RESISTANT WHITE PAINT
2. CLEAN SURFACE THOROUGHLY

INLET STENCIL DETAIL

NTS

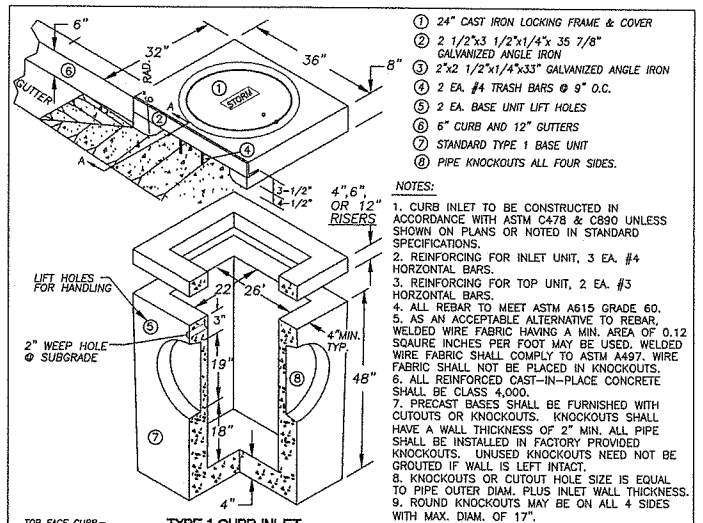

1. 24" CAST IRON LOCKING FRAME & COVER
2. 2 1/2"x3 1/2"x1/4"x 35 7/8" GALVANIZED ANGLE IRON
3. 2"x2 1/2"x1/4"x33" GALVANIZED ANGLE IRON
4. 2 EA. #4 TRASH BARS @ 9" O.C.
5. 2 EA. BASE UNIT LIFT HOLES
6. 6" CURB AND 12" GUTTERS
7. STANDARD TYPE 1 BASE UNIT
8. PIPE KNOCKOUTS ALL FOUR SIDES.

NOTES:

1. CURB INLET TO BE CONSTRUCTED IN ACCORDANCE WITH ASTM C478 & C890 UNLESS SHOWN ON PLANS OR NOTED IN STANDARD SPECIFICATIONS.
2. REINFORCING FOR INLET UNIT, 3 EA. #4 HORZONTAL BARS.
3. REINFORCING FOR TOP UNIT, 2 EA. #3 HORZONTAL BARS.
4. ALL REBAR TO MEET ASTM A615 GRADE 60.
5. AS AN ACCEPTABLE ALTERNATIVE TO REBAR, WELDED WIRE FABRIC HAVING A MIN. AREA OF 0.12 SQAURE INCHES PER FOOT MAY BE USED. WELDED WIRE FABRIC SHALL COMPLY TO ASTM A497. WIRE FABRIC SHALL NOT BE PLACED IN KNOCKOUTS.
6. ALL REINFORCED CAST-IN-PLACE CONCRETE SHALL BE CLASS 4,000.
7. PRECAST BASES SHALL BE FURNISHED WITH CUTOUTS OR KNOCKOUTS. KNOCKOUTS SHALL HAVE A WALL THICKNESS OF 2" MIN. ALL PIPE SHALL BE INSTALLED IN FACTORY PROVIDED KNOCKOUTS. UNUSED KNOCKOUTS NEED NOT BE GROUTED IF WALL IS LEFT INTACT.
8. KNOCKOUTS OR CUTOUT HOLE SIZE IS EQUAL TO PIPE OUTER DIAM. PLUS INLET WALL THICKNESS.
9. ROUND KNOCKOUTS MAY BE ON ALL 4 SIDES WITH MAX. DIAM. OF 17".
10. THE MAX. DEPTH FROM THE FINISHED GRADE TO THE PIPE INVERT IS 5'-0".
11. ANY PROTUDING ENDS OF PIPES SHALL BE TRIMMED FLUSH WITH THE INSIDE WALLS AND GROUTED TO THE SATISFACTION OF ENGINEER.
12. GUTTER IS TAPERED DOWN TO INLET.
13. INSTALL REMOVABLE APWA TYPE 60A TRAP OR EQUAL, SEE STD. PLAN D2.1.
14. CONTRACTOR SHALL HAVE THE OPTION OF FURNISHING PRECAST OR CAST-IN-PLACE INLET STRUCTURES, UNLESS SPECIFIED.

TYPE 1 CURB INLET

NTS

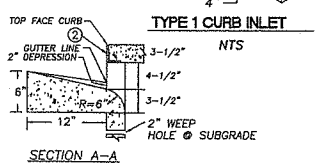

SECTION A–A

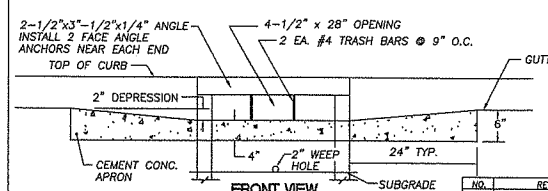

FRONT VIEW

NO.	REVISIONS	DATE	BY

DWG: D2-0.DWG

Department of Public Works
CLARK COUNTY
WASHINGTON
proud past, promising future

STANDARD TYPE 1 CURB INLET

APPROVED

COUNTY ENGINEER DATE

STANDARD D2.0
PLAN No.
DESIGNED SGH
DRAWN SGH
DATE 09/06/02

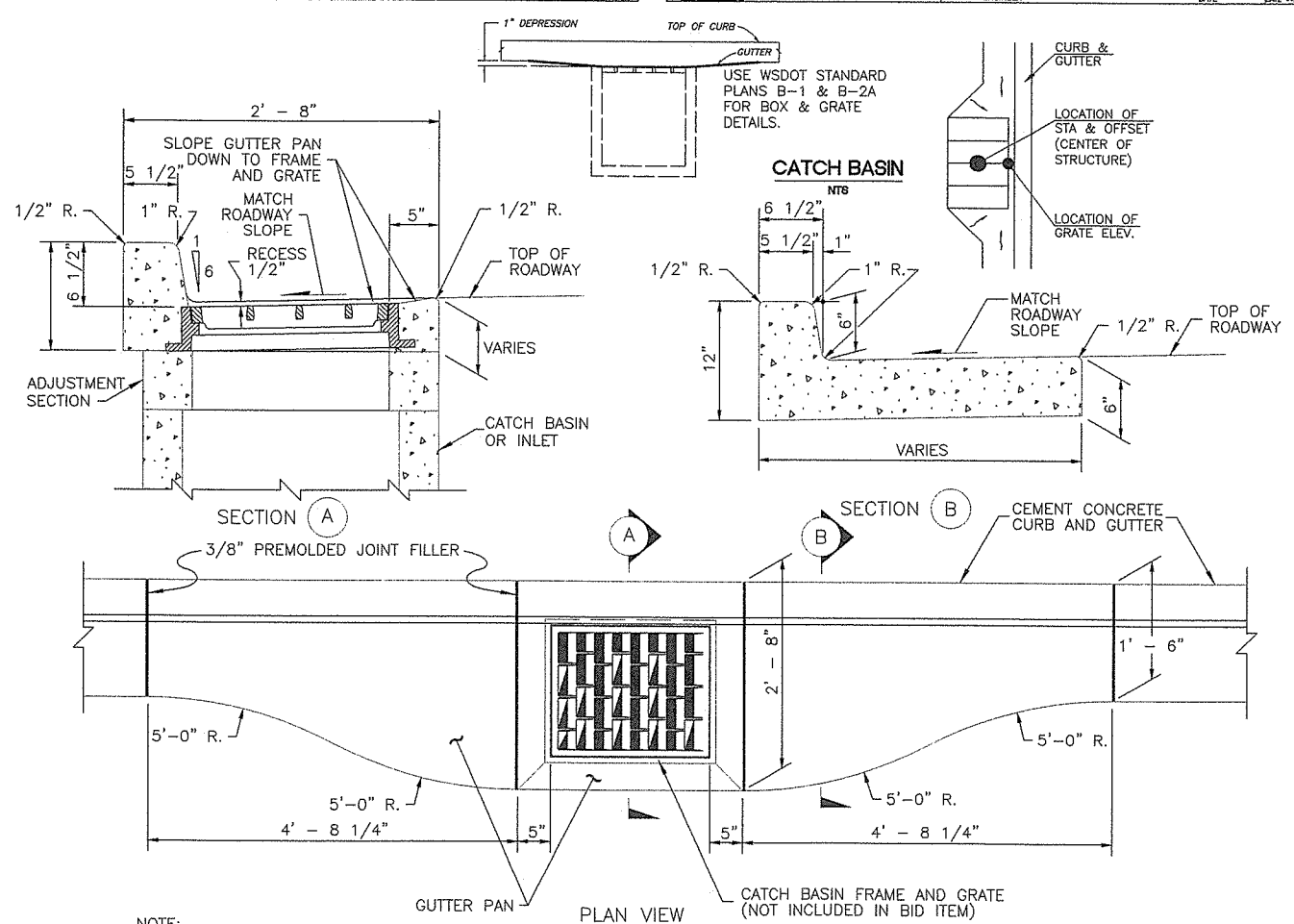

CATCH BASIN

NTS

NOTE:
USE CATCH BASIN GUTTER PAN DETAIL FOR ALL INLETS

CATCH BASIN GUTTER PAN

NTS

OPEN CUT UTILITY TRENCH BACKFILL DETAIL (COLLECTOR OR ARTERIAL)

SURFACING:

1. All A.C.P. shall be saw cut to provide a straight, clean edge prior to paving.
2. The cut line shall be one continuous straight line from the outer excavation limits of manhole, valve box, etc. to manhole, valve box, etc.
3. Pave with an 0.5 ft. minimum compacted depth A.C.P., or match existing or design section, whichever is greater.
4. Lifts for A.C.P. shall be an 0.15 ft. minimum and 0.35 ft. maximum for non-surface lifts (0.25' maximum for surface lift); the temperature shall be 250 degree minimum, 350 degree maximum, compacted to 92% of the theoretical maximum.
5. All joints shall be tacked, sealed and sanded.
6. When surfacing exists on both sides of the trench, new A.C.P. will be a minimum of 40" wide.
7. Trench shall be plated until paved.
   *For longitudinal installation, full lane restoration shall be required or as directed by Clark County.
   For transverse installation refer to surfacing restoration of detail U6.

BASE COURSE:

1. 0.80 ft. minimum depth (1-1/4" minus) C.S.B.C. (W.S.D.O.T. approved material).
2. Compacted to 95% of maximum density. See trench zone.
3. Equivalent depth of A.T.B. may be substituted.
4. For transverse or diagonal trenches in existing roadway pavement, CDF (as defined in the standard specifications section 2-09.3(1)E) will be used for a minimum of 3' in depth or from 6" above the top of the pipe to the bottom of full pavement section which ever is less.

TRENCH ZONE:

1. Granular backfill as approved by local agency or W.S.D.O.T. specifications for granular backfill. Compacted to 95% of maximum density in the trench zone using method C compaction as per Section 2-03.3 (14).
2. Native material may be used if approved prior to construction.
3. Trench zone width -- see below.

PIPE ZONE:

1. Pipe zone material optional, or as specified by utility owner and approved by the Department.
2. 1.0 ft. maximum from top of the pipe.

CONDITIONS:

1. A copy of the permit and requirements shall be on the job site at all times.
2. The permit holder shall be responsible for all restoration and maintenance of ditches, shoulders, driveways, landscaping, etc.
3. Call Clark County at 397-2446 twenty-four hours prior to commencing work.

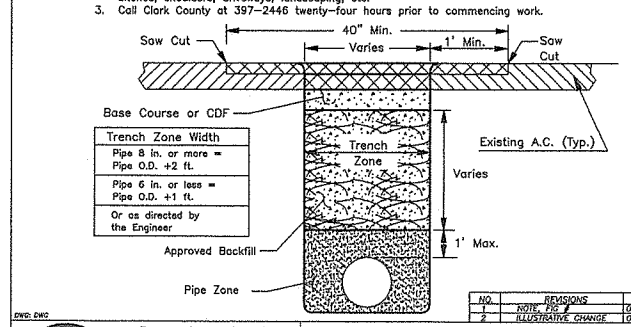

NO.	REVISIONS	DATE	BY
	NOTE & FIG. 2	05/02/01	GS
2	ILLUSTRATIVE CHANGE	07/10/01	BK

END: DWG

Department of Public Works
CLARK COUNTY
WASHINGTON
proud past, promising future

OPENCUT UTILITY TRENCH BACKFILLDETAIL
COLLECTOR ARTERIAL ROADWAY

APPROVED

Peter Capen 7/20/01
COUNTY ENGINEER DATE

U1
DESIGNED
DRAWN
DATE 07/10/01

DESIGNED SLF
DRAWN SLF/BY/JP
CRP #320922
HOR. N/A
VERT. N/A
DATE 01-23-04
DWG: D02
SHEET 13 OF 40

CALL 48 HOURS BEFORE YOU DIG
1-800-553-4344
"It's the Law"
NORTHWEST UTILITIES NOTIFICATION CENTER

DONALD A. MCKINNEY
STATE OF WASHINGTON
22894
REGISTERED PROFESSIONAL ENGINEER
7-27-04
EXPIRES: JUNE 22, 2004

DESIGN & ENGINEERING DIVISION
DESIGN SECTION

NE 76TH STREET
DRAINAGE DETAILS

proud past, promising future
CLARK COUNTY
WASHINGTON

DATE PLOTTED: Jan 27, 2004 – 9:48am MAS DRAWING FILE: W:\DWG\13500\13573\Final Design\13573D01-2.dwg

NOTES:

1. RELOCATE/REMOVE/ADJUST BY OTHERS.
2. RELOCATE EXIST MB TO 18" BEHIND FACE OF CURB, INSTALL NEW SUPPORT. (TYPE 1-S, UNLESS OTHERWISE NOTED).
3. ADJUST MH RIM TO FG.
4. MOVING/ADJUST VALVE COVER/METER BOX/FH TO FG.
5. SAWCUT AND/OR MATCH EXIST CURB AND/OR SIDEWALK.
6. REMOVE/ABANDON EXIST. STORM LINE/STRUCTURE, REFER TO SHEET 25.
7. PROTECT EXISTING TREE. ADJUST SLOPE AS NECESSARY.
8. REFER TO SIGNING AND STRIPING PLAN, SHEET 32.
9. REMOVE TREES/ BUSHES.
10. INSTALL 12" x 6" MJ x FLG TEE W/ TB, 6" FLG x MJ VALVE AND STD FH ASSEMBLY W/ CONC TB @ STA. 0+65.59 (25' LT)

REMOVE EXIST RDWY STRUCTURE TO LIMITS SHOWN. REPLACE PER TYPICAL SECTIONS.

SCALE IN FEET 0 20 40

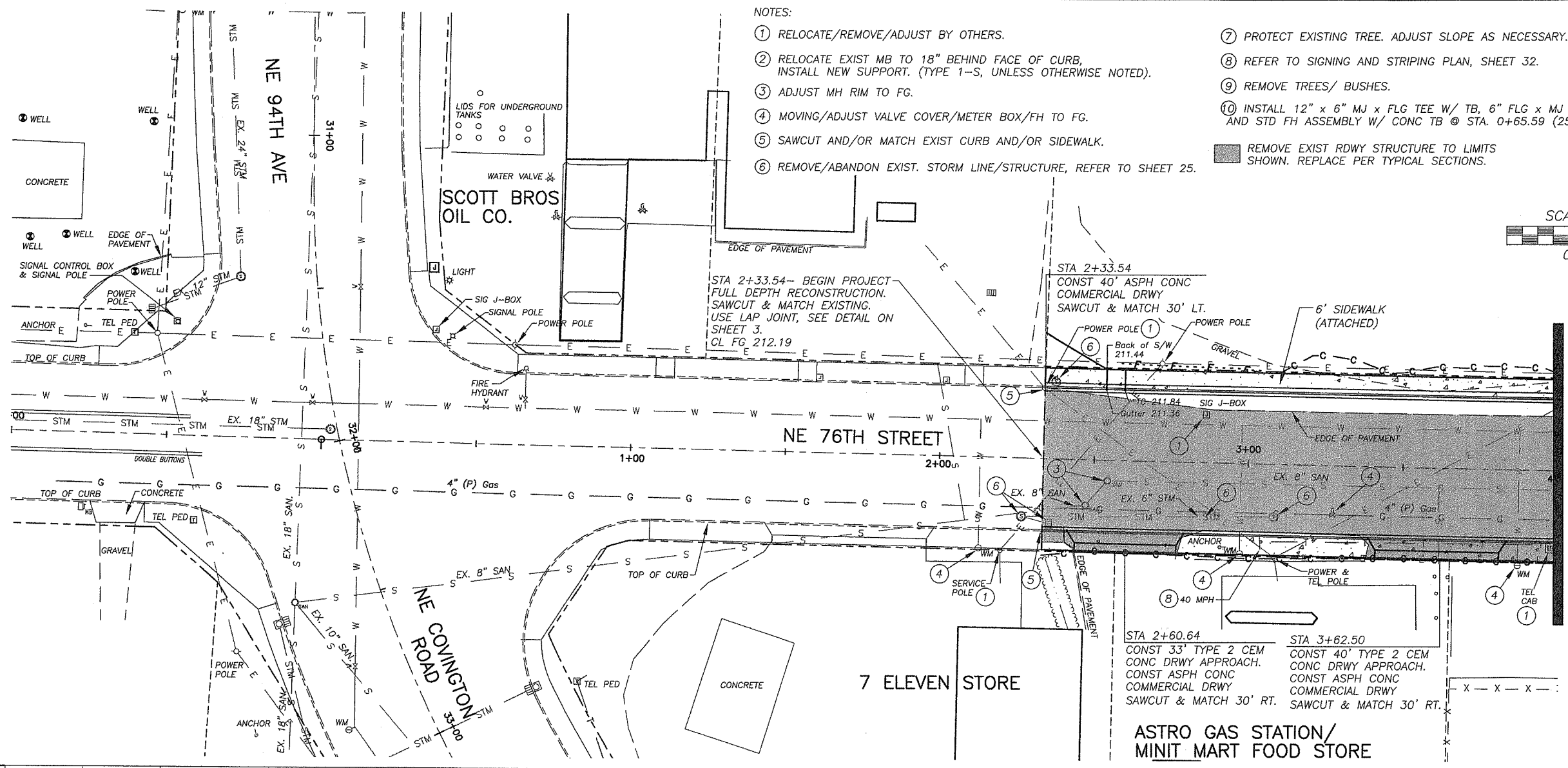

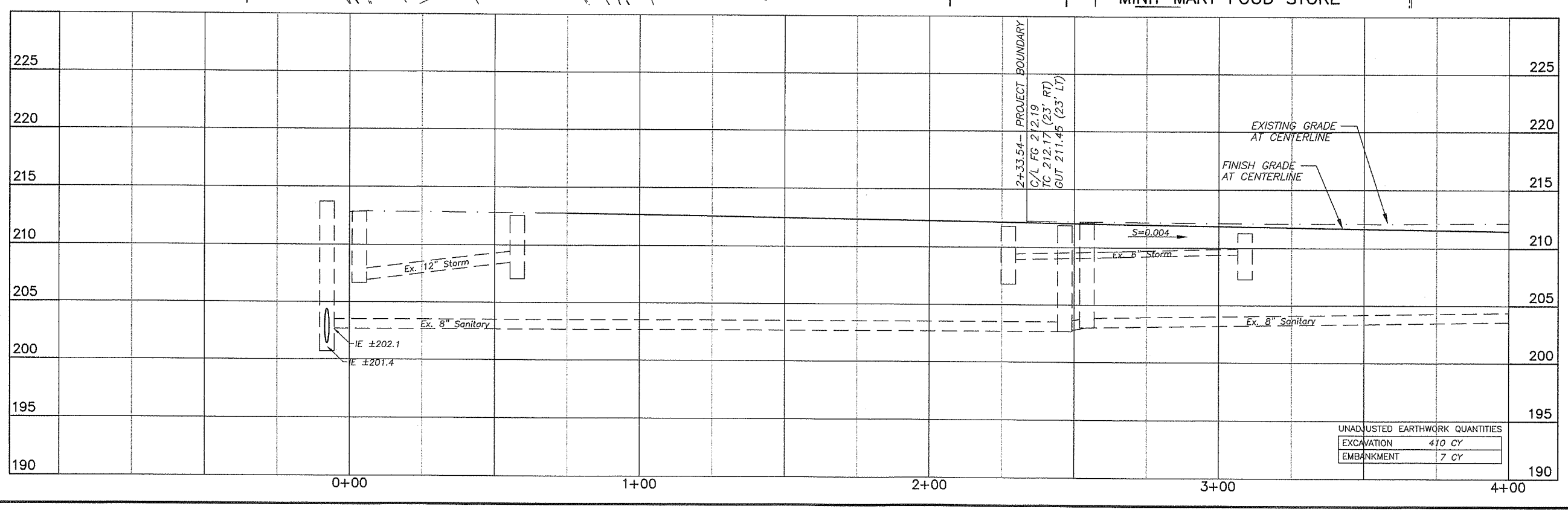

UNADJUSTED EARTHWORK QUANTITIES

EXCAVATION	410 CY
EMBANKMENT	7 CY

DESIGNED SLF
DRAWN SLF/AF
CRP #320922
HOR. 1"=20'
VERT. 1"=5'
DATE 01-23-04
DWG: PP1
SHEET 14 OF 40

CALL 48 HOURS BEFORE YOU DIG 1-800-553-4344 "It's the Law" NORTHWEST UTILITIES NOTIFICATION CENTER

STATE OF WASHINGTON GERALD J. MOE 22994 REGISTERED PROFESSIONAL ENGINEER 1-26-04 EXPIRES: JUNE 22, 2004

DESIGN & ENGINEERING DIVISION
DESIGN SECTION

NE 76TH STREET
PLAN & PROFILE (B.O.P. TO 4+00)

proud past, promising future
CLARK COUNTY WASHINGTON

DATE PLOTTED: Jan 23, 2004 - 4:38pm MAS DRAWING FILE: W:\DWG\13500\13573\Final Design\13573PP1-PP7.dwg

NOTES:

1. RELOCATE/REMOVE/ADJUST BY OTHERS.
2. RELOCATE EXIST MB TO 18" BEHIND FACE OF CURB, INSTALL NEW SUPPORT. (TYPE 1-S, UNLESS OTHERWISE NOTED).
3. ADJUST MH RIM TO FG.
4. MOVING/ADJUST VALVE COVER/METER BOX/FH TO FG.
5. SAWCUT AND/OR MATCH EXIST CURB AND/OR SIDEWALK.
6. REMOVE/ABANDON EXIST. STORM LINE/STRUCTURE, REFER TO SHEET 26.
7. PROTECT EXISTING TREE. ADJUST SLOPE AS NECESSARY.
8. REFER TO SIGNING AND STRIPING PLAN, SHEET 32.
9. REMOVE TREES/ BUSHES.
10. INSTALL STD 8" BO ASSEMBLY W/ TB @ STA 5+88.48 (36' LT)
11. CONNECT 8" DIP TO EX 12" DIP. INSTALL 12" CIMJ x 8" FLG EPOXY COATED TAPPING TEE AND 8" MJ x FLG GV @ STA 5+88.77 (13' LT). USE RESTRAINED JOINTS ON ALL FITTINGS.

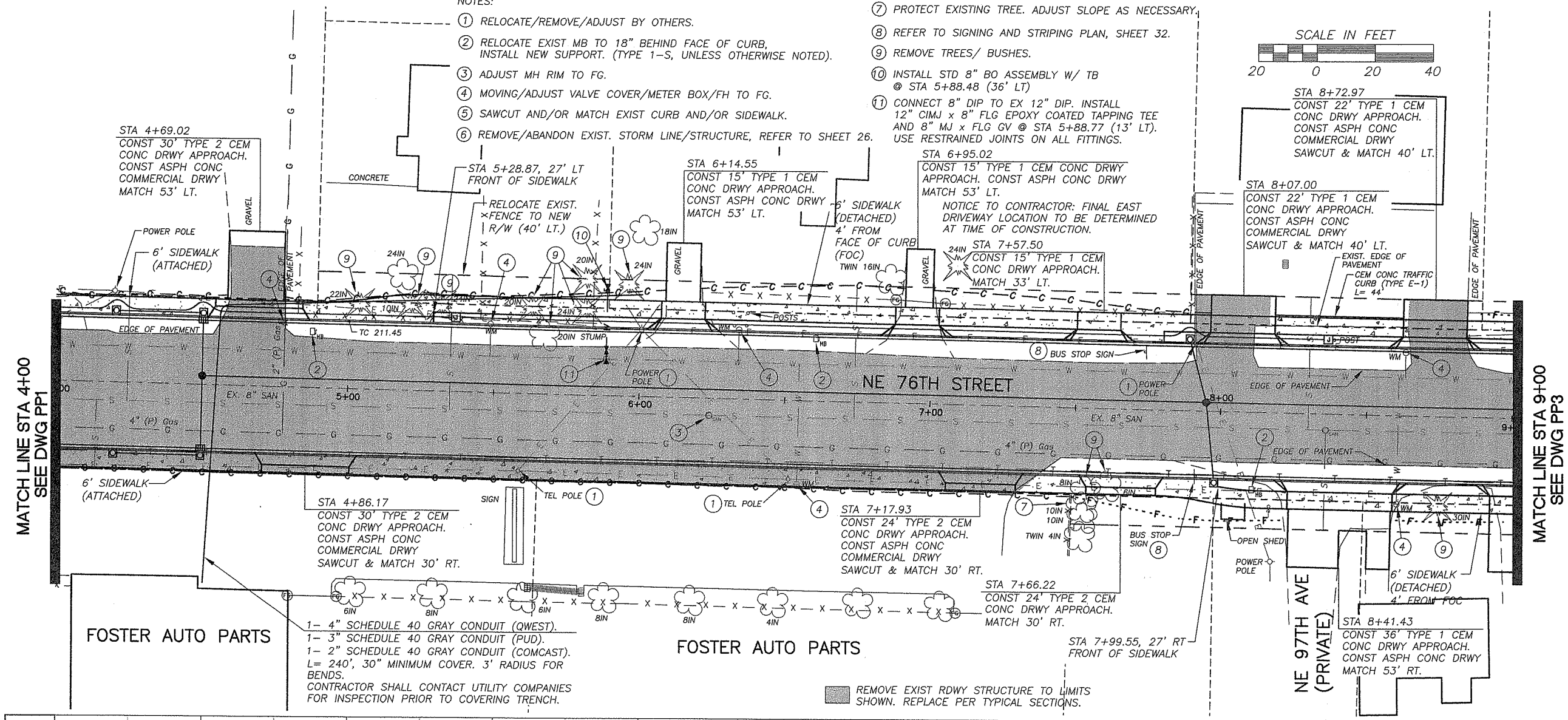

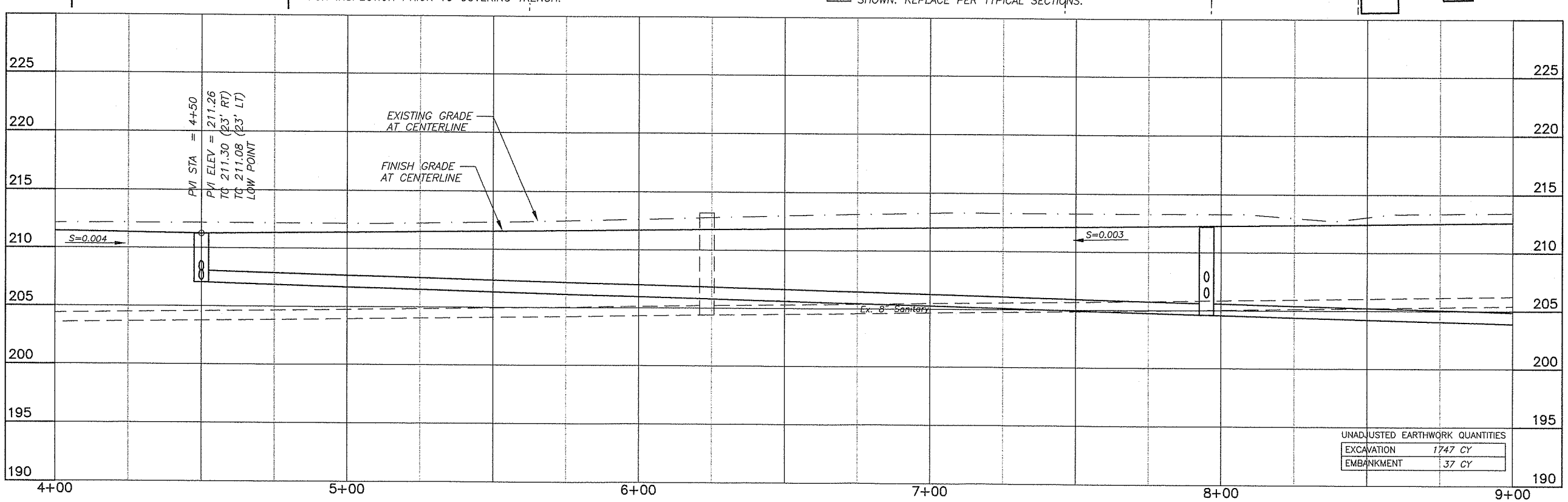

UNADJUSTED EARTHWORK QUANTITIES

EXCAVATION	1747 CY
EMBANKMENT	37 CY

DESIGNED SLF
DRAWN SLF/AF
CRP #320922
HOR. 1"=20'
VERT. 1"=5'
DATE 01-23-04
DWG: PP2
SHEET 15 OF 40

CALL 48 HOURS BEFORE YOU DIG 1-800-553-4344 "It's the Law" NORTHWEST UTILITIES NOTIFICATION CENTER

DONALD J. RODE STATE OF WASHINGTON 22994 REGISTERED PROFESSIONAL ENGINEER 1-28-04 EXPIRES: JUNE 22, 2004

DESIGN & ENGINEERING DIVISION
DESIGN SECTION

NE 76TH STREET
PLAN & PROFILE (4+00 TO 9+00)

proud past, promising future
CLARK COUNTY WASHINGTON

DATE PLOTTED: Jan 23, 2004 - 4:38pm M&S DRAWING FILE: W:\DWG\13500\13573\Final Design\13573PP1-PP7.dwg

NOTES:

1. RELOCATE/REMOVE/ADJUST BY OTHERS.
2. RELOCATE EXIST MB TO 18" BEHIND FACE OF CURB, INSTALL NEW SUPPORT. (TYPE 1-S, UNLESS OTHERWISE NOTED).
3. ADJUST MH RIM TO FG.
4. MOVING/ADJUST VALVE COVER/METER BOX/FH TO FG.
5. SAWCUT AND/OR MATCH EXIST CURB AND/OR SIDEWALK.
6. REMOVE/ABANDON EXIST. STORM LINE/STRUCTURE, REFER TO SHEET 27.
7. PROTECT EXISTING TREE. ADJUST SLOPE AS NECESSARY.
8. REFER TO SIGNING AND STRIPING PLAN, SHEET 32.
9. REMOVE TREES/ BUSHES.

REMOVE EXIST RDWY STRUCTURE TO LIMITS SHOWN. REPLACE PER TYPICAL SECTIONS.

SCALE IN FEET

20 0 20 40

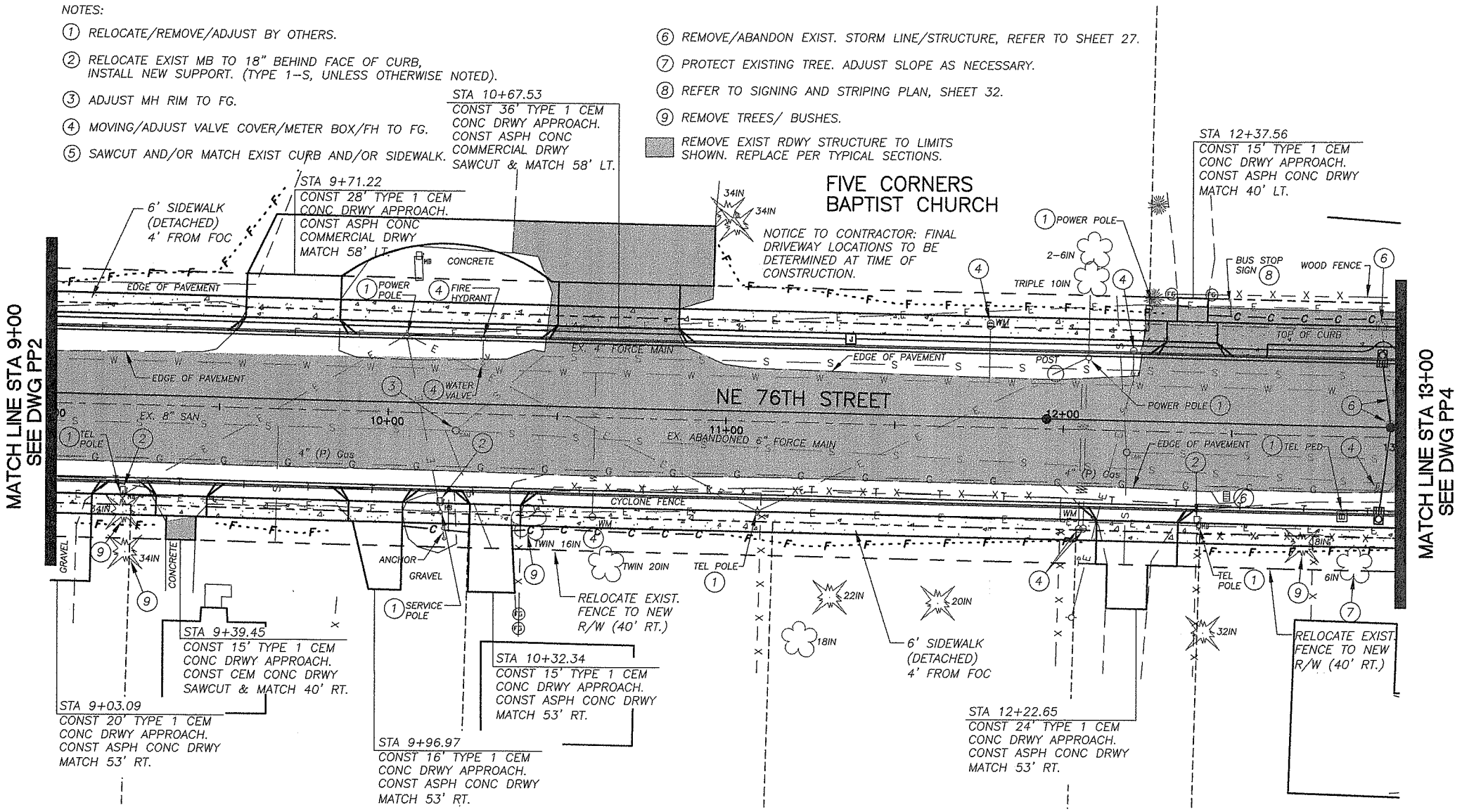

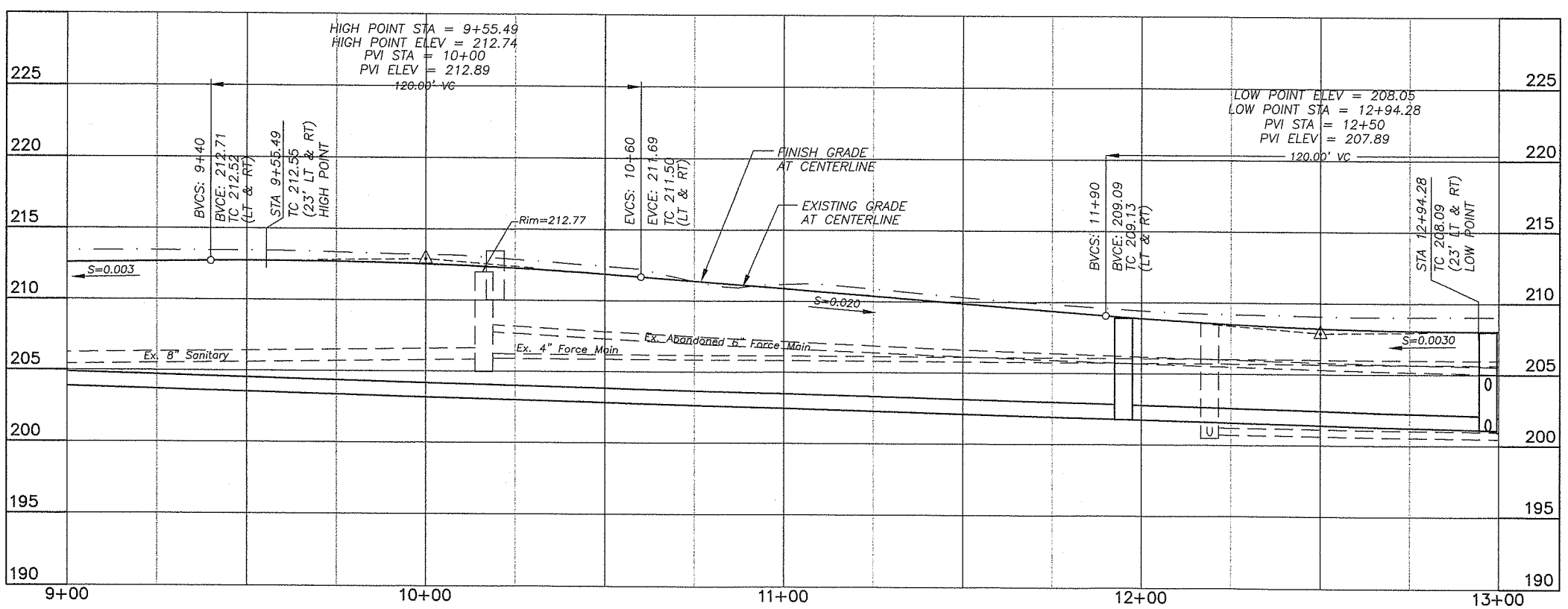

UNADJUSTED EARTHWORK QUANTITIES

EXCAVATION	1104 CY
EMBANKMENT	131 CY

DESIGNED	SLF
DRAWN	SLF/AF
CRP	#320922
HOR.	1"=20'
VERT.	1"=5'
DATE	01-23-04
DWG:	PP3
SHEET 16	OF 40

CALL 48 HOURS BEFORE YOU DIG 1-800-553-4344 "It's the Law" NORTHWEST UTILITIES NOTIFICATION CENTER

DONALD J. AMES STATE OF WASHINGTON 22318 REGISTERED PROFESSIONAL ENGINEER EXPIRES: JUNE 30, 2004

DESIGN & ENGINEERING DIVISION
DESIGN SECTION

NE 76TH STREET

PLAN & PROFILE (9+00 TO 13+00)

proud past, promising future

CLARK COUNTY WASHINGTON

DATE PLOTTED: Jan 23, 2004 - 4:38pm M&S DRAWING FILE: W:\DWG\13500\13573\Final Design\13573PP1-PP7.dwg

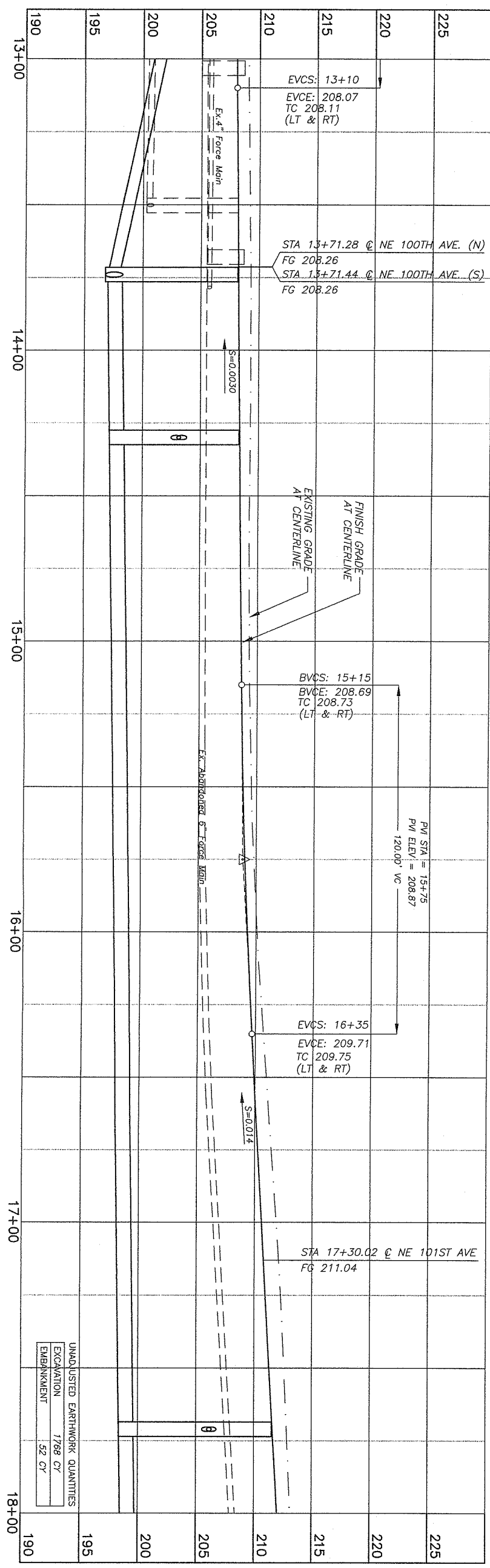

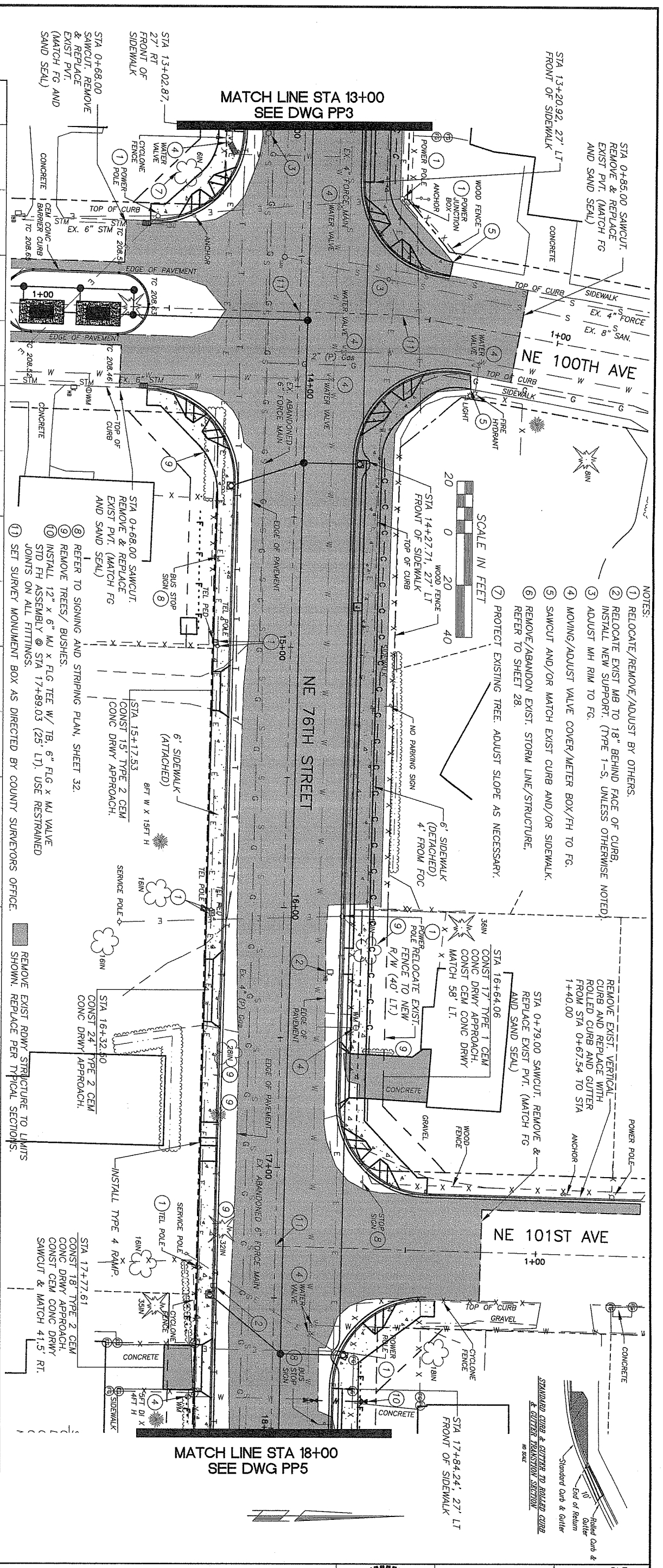

NOTES:

1. RELOCATE/REMOVE/ADJUST BY OTHERS.
2. RELOCATE EXIST MB TO 18" BEHIND FACE OF CURB, INSTALL NEW SUPPORT. (TYPE 1-S, UNLESS OTHERWISE NOTED).
3. ADJUST MH RIM TO FG.
4. MOVING/ADJUST VALVE COVER/METER BOX/FH TO FG.
5. SAWCUT AND/OR MATCH EXIST CURB AND/OR SIDEWALK.
6. REMOVE/ABANDON EXIST. STORM LINE/STRUCTURE, REFER TO SHEET 28.
7. PROTECT EXISTING TREE. ADJUST SLOPE AS NECESSARY.
8. REFER TO SIGNING AND STRIPING PLAN, SHEET 32.
9. REMOVE TREES/ BUSHES.
10. INSTALL 12" x 6" MJ x FLG TEE W/ TB, 6" FLG x MJ VALVE STD FH ASSEMBLY @ STA 17+89.03 (25' LT). USE RESTRAINED JOINTS ON ALL FITTINGS.
11. SET SURVEY MONUMENT BOX AS DIRECTED BY COUNTY SURVEYORS OFFICE.

REMOVE EXIST RDWY STRUCTURE TO LIMITS SHOWN. REPLACE PER TYPICAL SECTIONS.

proud past, promising future

CLARK COUNTY WASHINGTON

DESIGN & ENGINEERING DIVISION
DESIGN SECTION

NE 76TH STREET
PLAN & PROFILE (13+00 TO 18+00)

DONALD J. MOEL — STATE OF WASHINGTON — 22994 — REGISTERED PROFESSIONAL ENGINEER
1-26-04
EXPIRES: JUNE 22, 2004

CALL 48 HOURS BEFORE YOU DIG
1-800-553-4344
"It's the Law"
NORTHWEST UTILITIES NOTIFICATION CENTER

DESIGNED	SLF
DRAWN	SLF/AF
CRP	#320922
HOR.	1"=20'
VERT.	1"=5'
DATE	01-23-04
DWG:	PP4
SHEET	17 OF 40

NOTES:

1. RELOCATE/REMOVE/ADJUST BY OTHERS.
2. RELOCATE EXIST MB TO 18" BEHIND FACE OF CURB, INSTALL NEW SUPPORT. (TYPE 1-S, UNLESS OTHERWISE NOTED).
3. ADJUST MH RIM TO FG.
4. MOVING/ADJUST VALVE COVER/METER BOX/FH TO FG.
5. SAWCUT AND/OR MATCH EXIST CURB AND/OR SIDEWALK.
6. REMOVE/ ABANDON EXIST. STORM LINE/STRUCTURE, REFER TO SHEET 29.
7. PROTECT EXISTING TREE. ADJUST SLOPE AS NECESSARY.
8. REFER TO SIGNING AND STRIPING PLAN, SHEET 32.
9. REMOVE TREES/ BUSHES.
10. SET SURVEY MONUMENT BOX AS DIRECTED BY COUNTY SURVEYORS OFFICE.

REMOVE EXIST RDWY STRUCTURE TO LIMITS SHOWN. REPLACE PER TYPICAL SECTIONS.

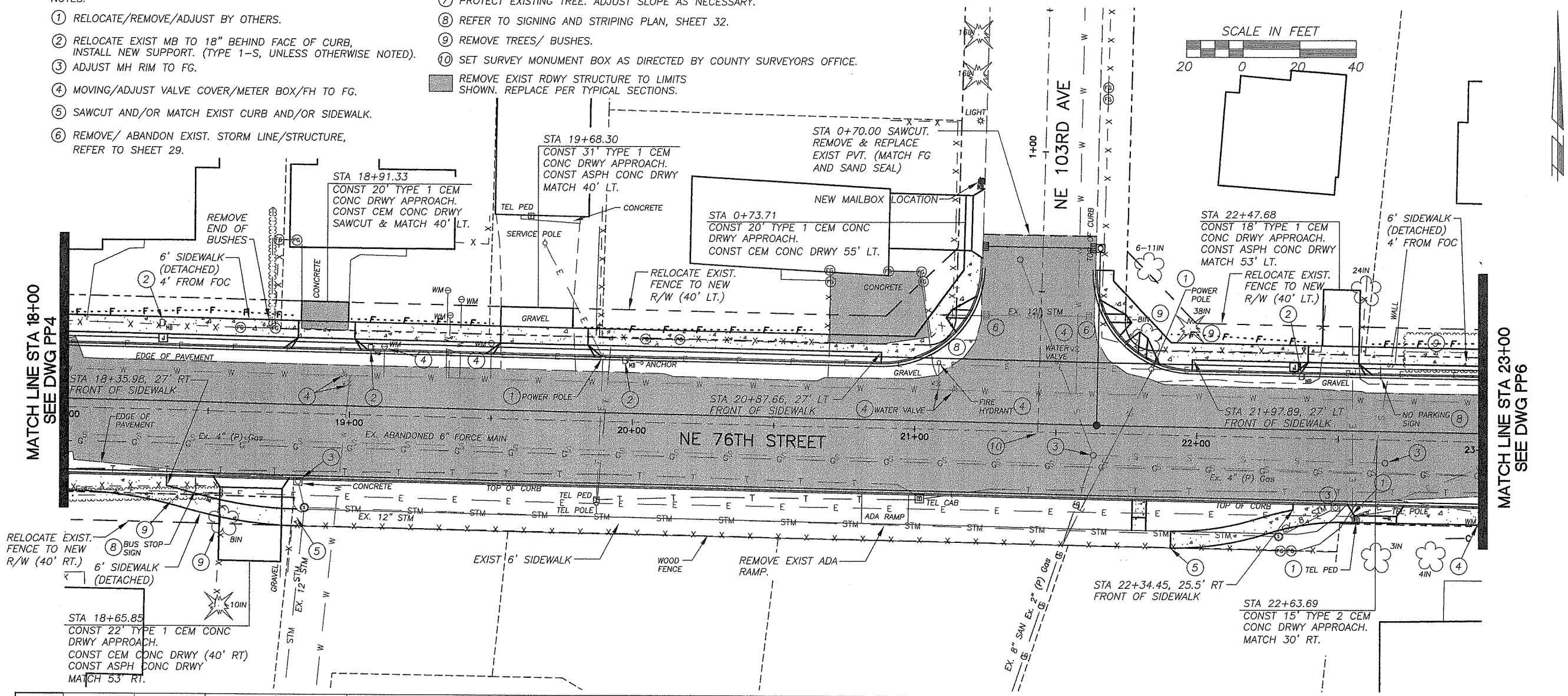

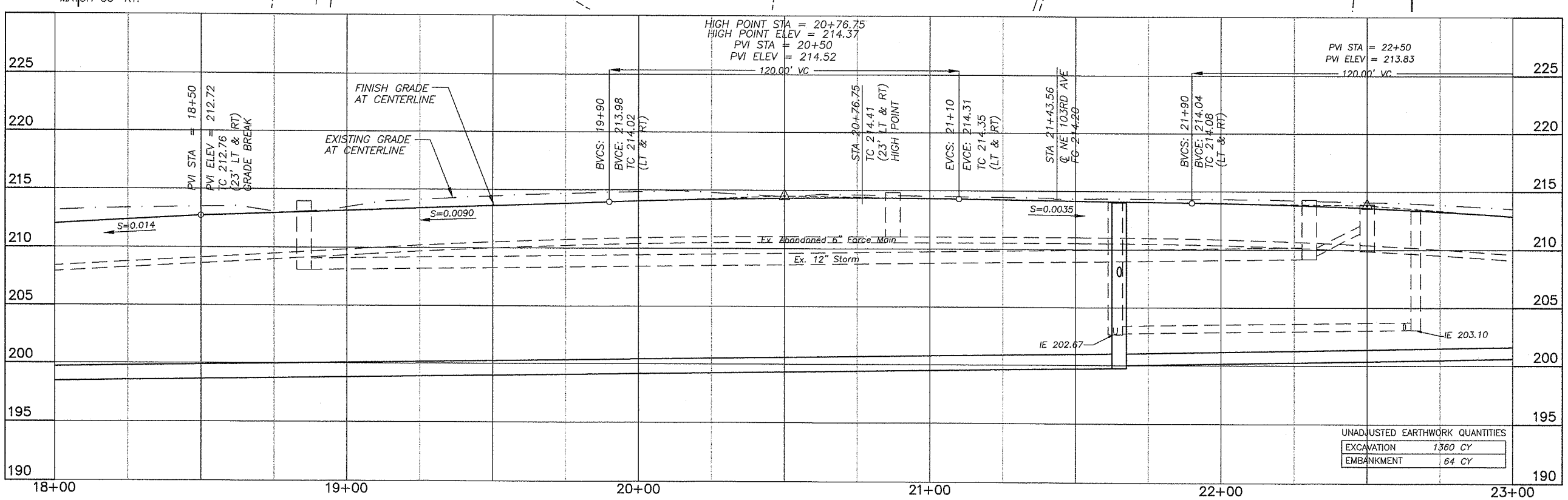

UNADJUSTED EARTHWORK QUANTITIES

EXCAVATION	1360 CY
EMBANKMENT	64 CY

DESIGNED	SLF
DRAWN	SLF/AF
CRP	#320922
HOR.	1"=20'
VERT.	1"=5'
DATE	01-23-04
DWG.	PP5
SHEET 18	OF 40

CALL 48 HOURS BEFORE YOU DIG 1-800-553-4344 "It's the Law" NORTHWEST UTILITIES NOTIFICATION CENTER

RICHARD J. HOFF STATE OF WASHINGTON 22894 REGISTERED PROFESSIONAL ENGINEER 1-26-04 EXPIRES: JUNE 22, 2004

DESIGN & ENGINEERING DIVISION
DESIGN SECTION

NE 76TH STREET
PLAN & PROFILE (18+00 TO 23+00)

proud past, promising future
CLARK COUNTY WASHINGTON

DATE PLOTTED: Jan 23, 2004 - 4:39pm MGS DRAWING FILE: W:\DWG\13500\13573\Final Design\13573PP1-PP7.dwg

NOTES:

1. RELOCATE/REMOVE/ADJUST BY OTHERS.
2. RELOCATE EXIST MB TO 18" BEHIND FACE OF CURB. INSTALL NEW SUPPORT. (TYPE 1-S, UNLESS OTHERWISE NOTED).
3. ADJUST MH RIM TO FG.
4. MOVING/ADJUST VALVE COVER/METER BOX/FH TO FG.
5. SAWCUT AND/OR MATCH EXIST CURB AND/OR SIDEWALK.
6. REMOVE/ABANDON EXIST. STORM LINE/STRUCTURE, REFER TO SHEET 30.
7. PROTECT EXISTING TREE. ADJUST SLOPE AS NECESSARY.
8. REFER TO SIGNING AND STRIPING PLAN, SHEET 32.
9. REMOVE TREES/ BUSHES.
10. INSTALL 12" x 6" MJ x FLG TEE, 6" FLG x MJ VALVE AND STD FH ASSEMBLY @ STA 25+86.58 (25' LT). USE RESTRAINED JOINTS ON ALL FITTINGS.
11. SET SURVEY MONUMENT BOX AS DIRECTED BY COUNTY SURVEYORS OFFICE.

REMOVE EXIST RDWY STRUCTURE TO LIMITS SHOWN. REPLACE PER TYPICAL SECTIONS.

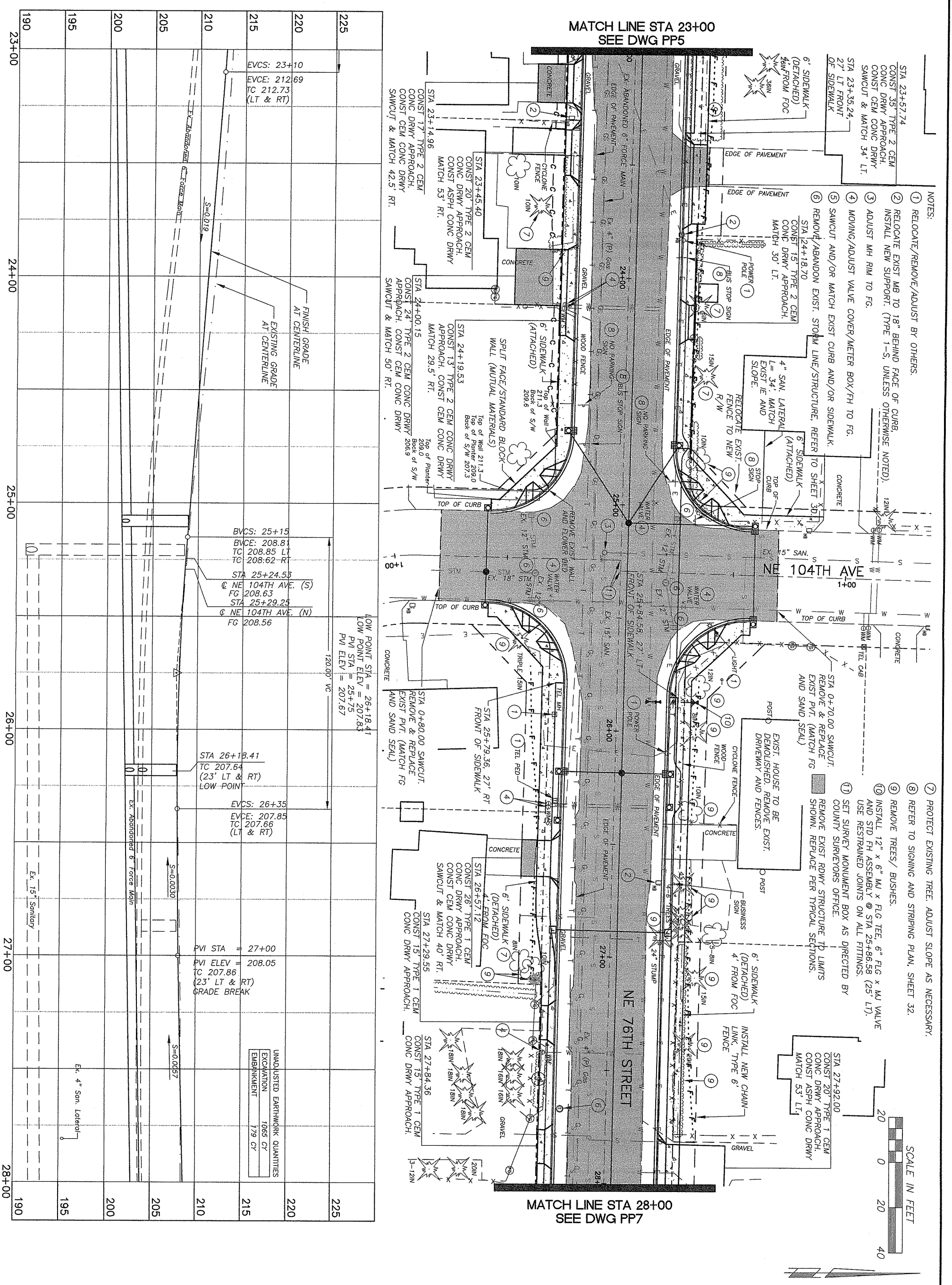

CLARK COUNTY WASHINGTON
proud past, promising future

DESIGN & ENGINEERING DIVISION
DESIGN SECTION

NE 76TH STREET
PLAN & PROFILE (23+00 TO 28+00)

DONALD J. MOSER, STATE OF WASHINGTON, 22994 REGISTERED PROFESSIONAL ENGINEER
1-26-04
EXPIRES: JUNE 22, 2004

CALL 48 HOURS BEFORE YOU DIG
1-800-553-4344
"It's the Law"
NORTHWEST UTILITIES NOTIFICATION CENTER

DESIGNED	SLF
DRAWN	SLF/AF
CRP	#320922
HOR.	1"=20'
VERT.	1"=5'
DATE	01-23-04
DWG:	PP6
SHEET 19	OF 40

NOTES:

1. RELOCATE/REMOVE/ADJUST BY OTHERS.
2. RELOCATE EXIST MB TO 18" BEHIND FACE OF CURB, INSTALL NEW SUPPORT. (TYPE 1-S, UNLESS OTHERWISE NOTED).
3. ADJUST MH RIM TO FG.
4. MOVING/ADJUST VALVE COVER/METER BOX/FH TO FG.
5. SAWCUT AND/OR MATCH EXIST CURB AND/OR SIDEWALK.
6. REMOVE/ABANDON EXIST. STORM LINE/STRUCTURE, REFER TO SHEET 31.
7. PROTECT EXISTING TREE. ADJUST SLOPE AS NECESSARY.
8. REFER TO SIGNING AND STRIPING PLAN, SHEET 32.
9. REMOVE TREES/ BUSHES.

REMOVE EXIST RDWY STRUCTURE TO LIMITS SHOWN. REPLACE PER TYPICAL SECTIONS.

SCALE IN FEET

20 0 20 40

CONTRACTOR TO PROVIDE CPU 24 HOURS NOTICE PRIOR TO WORKING ON PROPERTY. ACCESS WITHIN FENCED AREA REQUIRES ADVANCE APPROVAL FROM CPU.

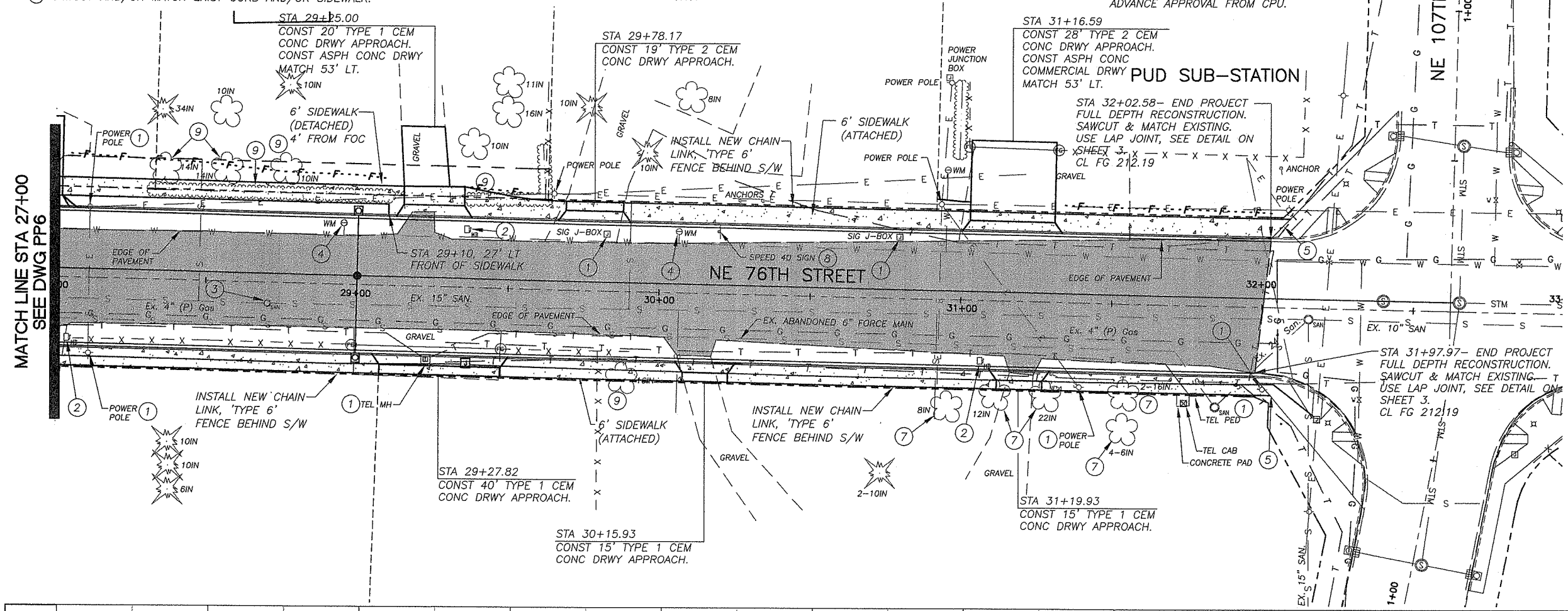

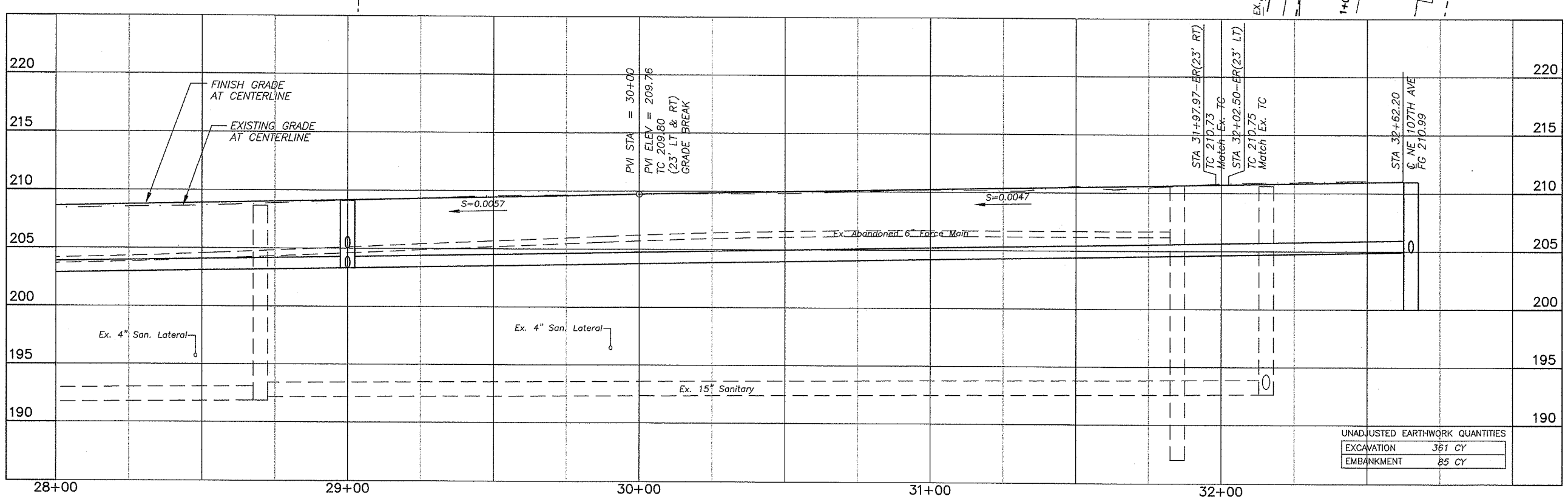

UNADJUSTED EARTHWORK QUANTITIES

EXCAVATION	361 CY
EMBANKMENT	85 CY

DESIGNED	SLF
DRAWN	SLF/AF
CRP	#320922
HOR.	1"=20'
VERT.	1"=5'
DATE	01-23-04
DWG:	PP7
SHEET 20	OF 40

CALL 48 HOURS BEFORE YOU DIG 1-800-553-4344 "It's the Law" NORTHWEST UTILITIES NOTIFICATION CENTER

STATE OF WASHINGTON DONALD J. NOTT 22594 REGISTERED PROFESSIONAL ENGINEER 1-26-04 EXPIRES: JUNE 23, 2004

DESIGN & ENGINEERING DIVISION
DESIGN SECTION

NE 76TH STREET
PLAN & PROFILE (28+00 TO E.O.P.)

proud past, promising future

CLARK COUNTY WASHINGTON

DATE PLOTTED: Jan 23, 2004 - 4:40pm M&S DRAWING FILE: W:\DWG\13500\13573\Final Design\13573PP1-PP7.dwg

STANDARD COMPOUND METER INSTALLATION

N.T.S.

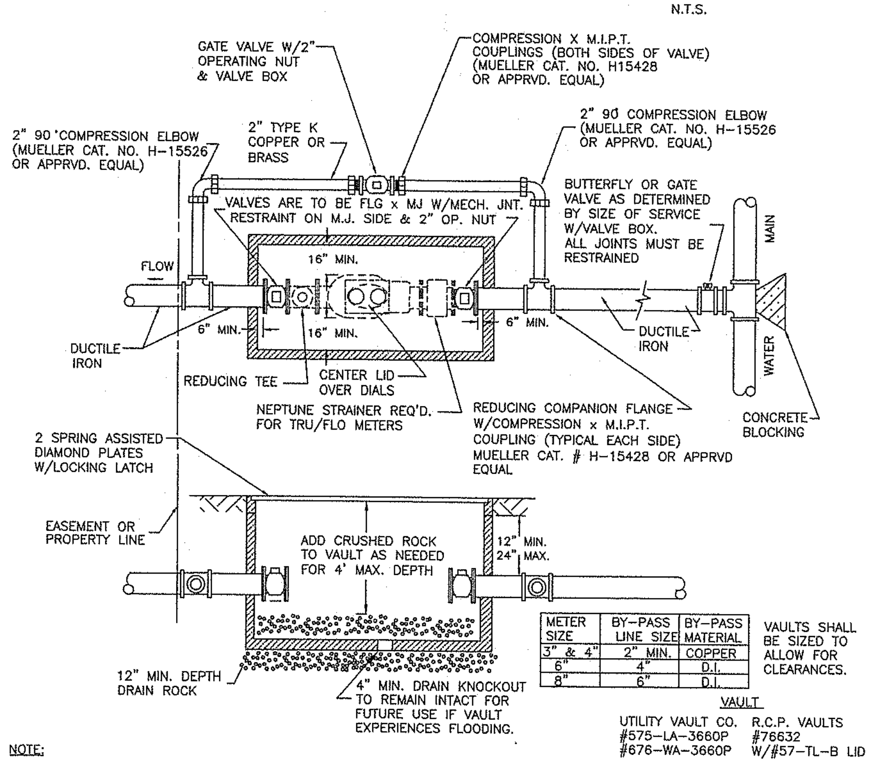

METER SIZE	BY-PASS LINE SIZE	BY-PASS MATERIAL
3" & 4"	2" MIN.	COPPER
6"	4"	D.I.
8"	6"	D.I.

VAULT

UTILITY VAULT CO. #575-LA-3660P #676-WA-3660P

R.C.P. VAULTS #76632 W/#57-TL-B LID

NOTE:

1. CITY TO SUPPLY METER SPACER, REDUCING TEE AND STRAINER. CONTACT CITY INSPECTOR 2 WEEKS PRIOR TO INSTALLATION
2. TEN PIPE DIAMETERS OF STRAIGHT PIPE REQ'D. IN & OUT OF METER. (IF USING 6" PIPE, NO BENDS ALLOWED WITHIN 5' OF THE METER IN EITHER DIRECTION. IE: 6" x 10 = 60")
3. CONTRACTOR SHALL USE APPROPRIATE METHODS TO ENSURE COPPER PIPE, FITTINGS AND JOINTS WILL REMAIN LEAK-TIGHT.
4. ALL METERS SHALL BE INSTALLED BY THE CITY OF VANCOUVER PER VMC 14.04.170(B). CONTRACTOR TO INSTALL TEMP. SPACER AS PER NOTE 1.
5. METER BOX IS NOT ALLOWED IN WITHOUT PRIOR APPROVAL.

STANDARD WATER SERVICE – 1"

N.T.S.

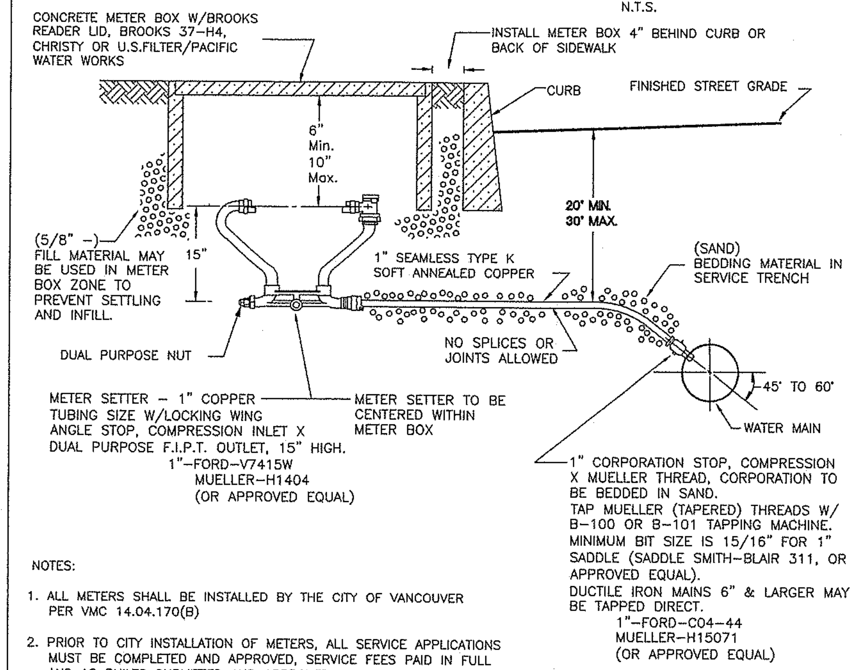

NOTES:

1. ALL METERS SHALL BE INSTALLED BY THE CITY OF VANCOUVER PER VMC 14.04.170(B)
2. PRIOR TO CITY INSTALLATION OF METERS, ALL SERVICE APPLICATIONS MUST BE COMPLETED AND APPROVED, SERVICE FEES PAID IN FULL AND AS BUILTS SUBMITTED AND APPROVED.
3. CONTRACTOR SHALL CONTACT CITY CONSTRUCTION MANAGER'S OFFICE (696-8050) 48 HRS. PRIOR TO INSTALLING ANY WATER SERVICE CONNECTIONS.
4. METERS WILL NOT BE SET BY THE CITY PRIOR TO DISINFECTION OF THE MAIN AND SERVICE, AND, PRIOR TO A SUCCESSFUL BACTERIOLOGICAL TEST.
5. WATER SERVICES SHALL BE PRESSURE TESTED ALONG WITH THE MAIN.
6. DURING THE PRESSURE TEST, THE MAIN SHALL BE OPEN TO INSPECTION AT ALL CORPORATIONS.
7. METER BOX IS NOT ALLOWED IN HARD SURFACE AREAS WITHOUT PRIOR APPROVAL.
8. ALL SERVICE REPLACEMENTS MUST TERMINATE AT EITHER A NEW YOKE, AN ANGLE STOP OR A CURB STOP. NEW ANGLE OR CURB STOPS SHALL BE MUELLER, FORD OR McDONALD COMPRESSION FITTINGS OR APPROVED EQUAL.
9. A MAXIMUM OF ONE FITTING (MUELLER 110 3 PART COMPRESSION x COMPRESSION, OR APPROVED EQUAL) SHALL BE ALLOWED BETWEEN THE CORP. STOP AND THE METER SET ON ALL SERVICE TRANSFERS.

STANDARD WATER SERVICE – 1 1/2" & 2"

N.T.S.

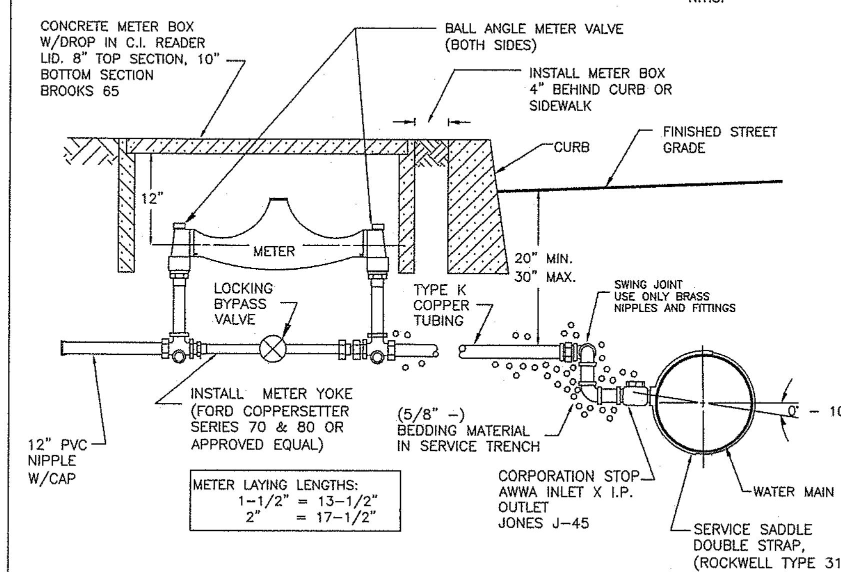

NOTES:

1. ALL METERS SHALL BE INSTALLED BY THE CITY OF VANCOUVER PER VMC 14.04.170(B)
2. PRIOR TO CITY INSTALLATION OF METERS, ALL SERVICE APPLICATIONS MUST BE COMPLETED AND APPROVED. SERVICE FEES PAID IN FULL AND AS-BUILTS SUBMITTED AND APPROVED.
3. CONTRACTOR SHALL CONTACT CITY CONSTRUCTION MANAGER'S OFFICE (360)696-8050 48 HOURS PRIOR TO INSTALLING ANY WATER SERVICE CONNECTIONS.
4. METERS WILL NOT BE SET BY THE CITY PRIOR TO DISINFECTION OF THE MAIN AND SERVICE, AND PRIOR TO A SUCCESSFUL BACTERIOLOGICAL TEST.
5. WATER SERVICES SHALL BE PRESSURE TESTED ALONG WITH THE MAIN.
6. DURING THE PRESSURE TEST, THE MAIN SHALL BE OPEN FOR INSPECTION OF ALL CORPORATION STOPS.
7. USE 1-7/8" BIT FOR ALL 2" SADDLE TAPS AND 1-3/8" BIT FOR 1-1/2" SADDLE TAPS.
8. METER BOX IS NOT ALLOWED IN HARD SURFACED AREAS WITHOUT PRIOR APPROVAL.

COMBINATION AIR RELEASE VALVE

N.T.S.

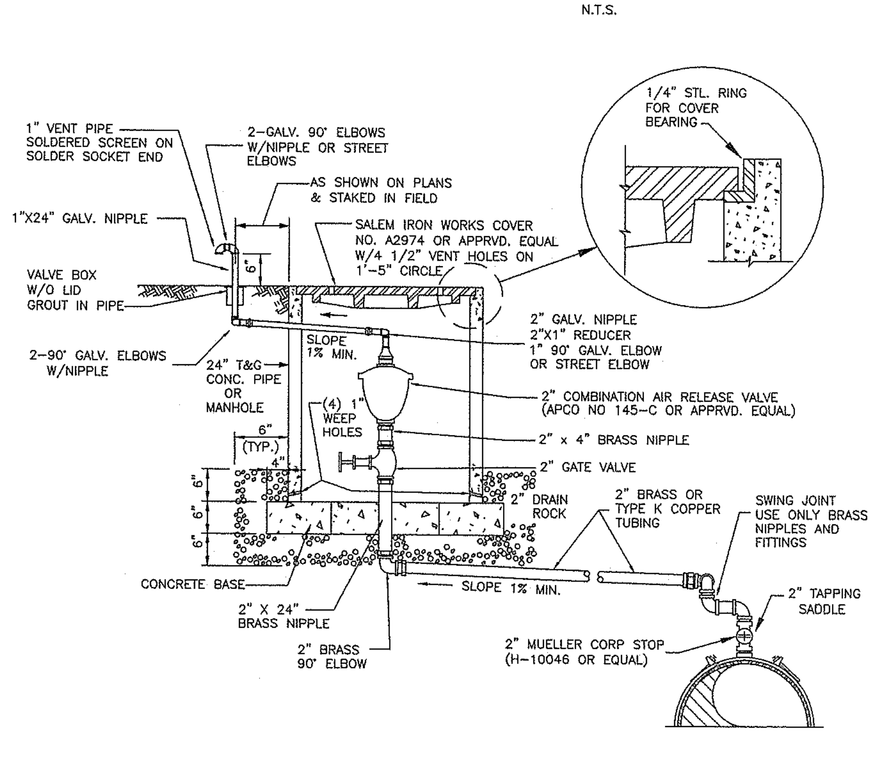

STANDARD VALVE BOX AND COVER

N.T.S.

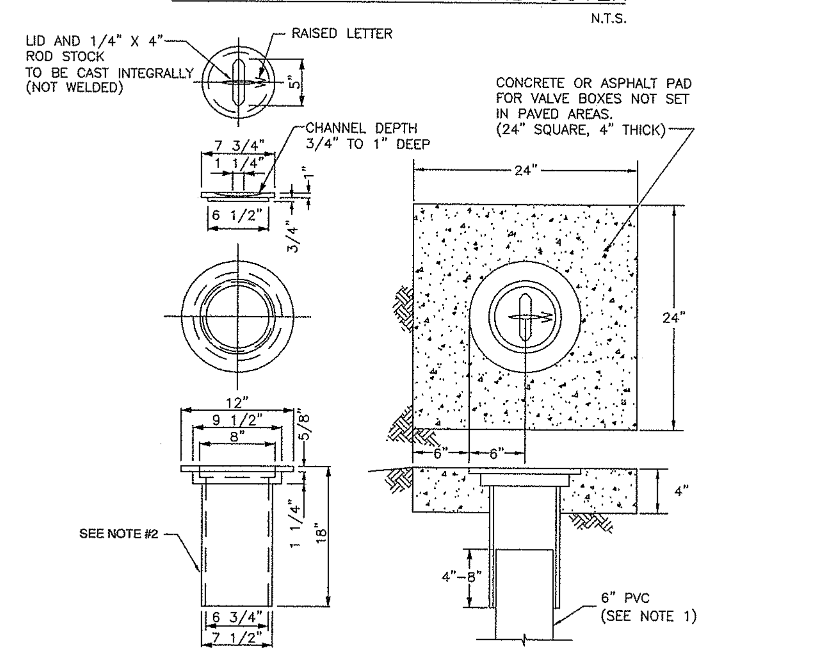

NOTES:

1. EXTENSIONS SHALL BE 6" ASTM D 3034 SDR 35 PVC PIPE (ONE PIECE)
2. U.S. FILTER/PACIFIC WATER WORKS NO. 910 OR EQUAL.
3. THERE SHALL BE 1/2" CLEARANCE UNDER THE PIN CAST INTO THE LID.

STANDARD FIRE HYDRANT ASSEMBLY

N.T.S.

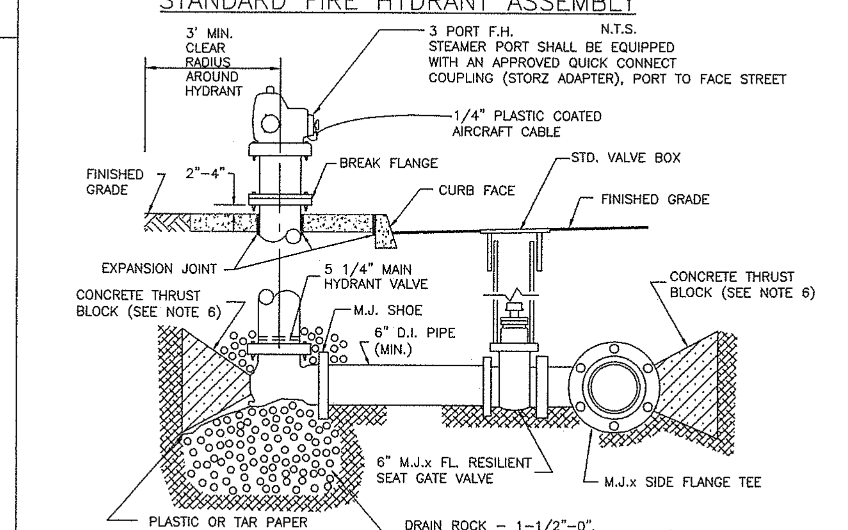

NOTES:

1. FIRE HYDRANT INSTALLATIONS SHALL BE APPROVED BY THE CITY INSPECTOR PRIOR TO BACKFILLING.
2. FIRE HYDRANT LOCATIONS SHALL BE AS SHOWN ON THE PLANS. FIRE HYDRANTS SHALL NOT BE SET UNTIL LOCATION AND DEPTH ARE APPROVED BY THE CITY.
3. FIRE HYDRANT STANDARD BURY IS 4' UNLESS OTHERWISE NOTED ON THE PLANS.
4. A 4'x4'x4" CONCRETE PAD SHALL BE CENTERED AROUND THE FIRE HYDRANT.
5. CONCRETE PAD SHALL BE PLACED FLUSH W/BACK OF CURB OR SIDEWALK. EXPANSION JOINT MATERIAL SHALL BE PLACED BETWEEN THE CONCRETE PAD AND CURB/SIDEWALK.
6. IN LIEU OF CONCRETE THRUST BLOCK ALLOWABLE JOINT RESTRAINT SYSTEMS (SEE SHEET 2) MAY BE USED FOR INSTALLATIONS OF NOT MORE THAN 18'. (1 PIPE LENGTH)
7. FIRE HYDRANTS SHALL BE FACTORY PAINTED WITH SAFETY YELLOW HIGH GLOSS EQUIPMENT ENAMEL.
8. FIRE HYDRANT MAINS SHALL BE 8" MIN., A 6" MAIN CAN BE USED FOR A DEAD-END RUN OF LESS THAN 50' TO A HYDRANT SUBJECT TO ADEQUATE FIRE FLOW.

STANDARD WATER LINE DETAILS

SHEET 1

Approved By: [signature] 1 Dec 27, 2001

ENGINEER DATE

DATE	By	APPRV.	REVISIONS
4/90	RJH	TDM	REVISED SPECIFICATIONS AND DETAILS
1/93	PCJ	JNR	REVISED SPECIFICATIONS AND DETAILS
10/94	TT/SH	JNR	REVISED SPECIFICATIONS AND DETAILS
12/98	TLT	JNR	REVISED SPECIFICATIONS AND DETAILS
10/01	GH/TT	PGE	REVISED SPECIFICATIONS AND DETAILS

ENGINEERING SERVICES
WATER ENGINEERING
P.O. BOX 1995
VANCOUVER, WA 98668-1995
(360) 696-8223
FAX: (360) 696-8460
www.ci.vancouver.wa.us

CITY OF VANCOUVER WASHINGTON

CALL 2 BUSINESS DAYS BEFORE YOU DIG 1-800-553-4344 "It's the Low"

A FREE SERVICE

CLARK COUNTY UTILITIES COORDINATING COUNCIL

SHEET OF

CLARK COUNTY WASHINGTON

proud past, promising future

DESIGN & ENGINEERING DIVISION
DESIGN SECTION

NE 76TH STREET
STANDARD WATER LINE DETAILS

DONALD J. MOE STATE OF WASHINGTON 22994 REGISTERED PROFESSIONAL ENGINEER 1-27-04

EXPIRES: JUNE 22, 2004

CALL 48 HOURS BEFORE YOU DIG 1-800-553-4344 "It's the Low"

NORTHWEST UTILITIES NOTIFICATION CENTER

DESIGNED	
DRAWN	
CRP	#320922
HOR.	N/A
VERT.	N/A
DATE	01-23-04
DWG:	WP1
SHEET 21	OF 40

STANDARD BLOWOFF ASSEMBLY N.T.S.

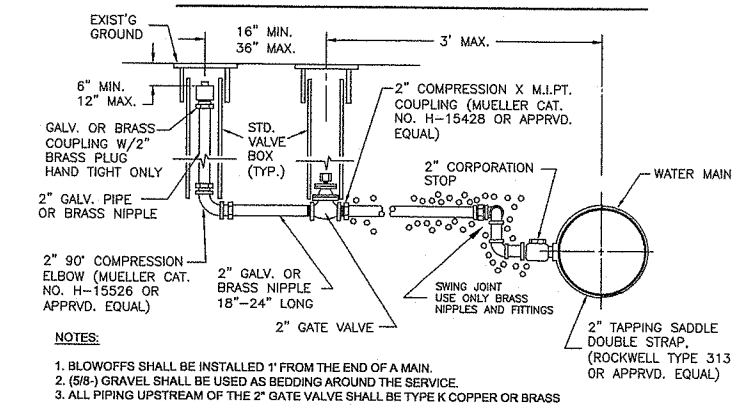

NOTES:

1. BLOWOFFS SHALL BE INSTALLED 1' FROM THE END OF A MAIN.
2. (5/8-) GRAVEL SHALL BE USED AS BEDDING AROUND THE SERVICE.
3. ALL PIPING UPSTREAM OF THE 2" GATE VALVE SHALL BE TYPE K COPPER OR BRASS

STANDARD MANUAL AIR RELEASE VALVE N.T.S.

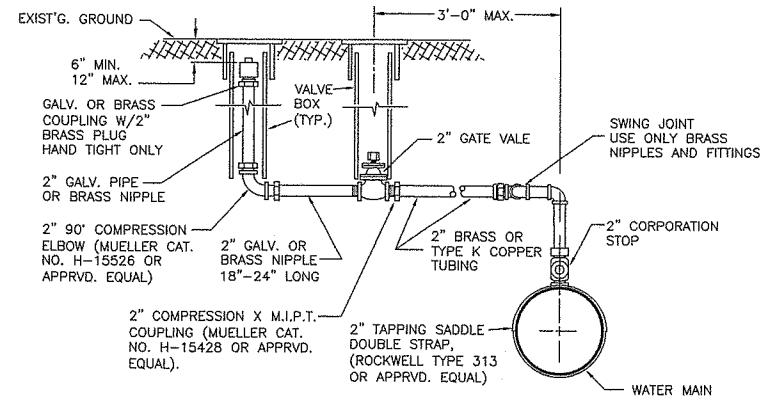

STANDARD THRUST BLOCK N.T.S.

SOIL BEARING = 2000 LB/FT²				
PIPE SIZE	HORIZ. BENDS	BEARING AREA S.F.	VOL. OF BLOCKING C.F.	LENGTH OF BLOCKING
4"	TEE	2.3	0.8	0.86
	90°	3.2	1.4	1.06
	45°	1.7	0.5	0.73
	22-1/2°	0.9	0.2	0.46
	11-1/4°	–	–	–
6"	TEE	4.7	2.4	1.24
	90°	6.6	4.0	1.53
	45°	3.6	1.6	1.05
	22-1/2°	1.8	0.6	0.66
	11-1/4°	0.9	0.2	0.39
8"	TEE	8.0	5.4	1.63
	90°	11.4	9.0	2.00
	45°	6.2	3.8	1.37
	22-1/2°	3.1	1.3	0.87
	11-1/4°	1.6	0.5	0.51
10"	TEE	12.1	9.9	2.00
	90°	17.1	16.7	2.46
	45°	9.3	6.6	1.69
	22-1/2°	4.7	2.4	1.08
	11-1/4°	2.4	0.9	0.63
12"	TEE	17.1	16.7	2.37
	90°	24.2	28.0	2.93
	45°	13.1	11.2	2.01
	22-1/2°	6.7	4.1	1.28
	11-1/4°	3.4	1.5	0.74
16"	TEE	23.6	27.3	2.73
	90°	33.6	46.0	3.37
	45°	18.2	18.3	2.29
	22-1/2°	9.3	6.7	1.42
	11-1/4°	4.7	2.4	0.80
18"	TEE	29.9	38.5	3.05
	90°	42.2	64.7	3.79
	45°	22.8	25.8	2.57
	22-1/2°	11.7	9.4	1.60
	11-1/4°	5.9	3.3	0.90
24"	TEE	52.3	89.1	4.03
	90°	74.0	149.8	5.00
	45°	40.0	59.7	3.55
	22-1/2°	20.4	21.7	2.11
	11-1/4°	10.3	7.7	1.18

NOTES:

1. ALL BLOCKING SHALL BE POURED AGAINST FIRM UNDISTURBED SOIL.
2. ALL CONCRETE BLOCKING SHALL BE POURED IN PLACE WITHOUT DIRECT CONTACT TO PIPE, FITTINGS OR FLANGES. 15 LB. ASPHALT-IMPREGNATED FELT, OR EQUIVALENT AS APPROVED BY THE INSPECTOR, SHALL BE PLACED BETWEEN THE CONCRETE AND PIPE, FITTINGS OR FLANGES.
3. LAYOUT TO BE APPROVED BY THE INSPECTOR PRIOR TO AND AFTER CONCRETE POUR.
4. CONCRETE FOR ALL BLOCKING SHALL HAVE A 28-DAY MINIMUM COMPRESSIVE STRENGTH OF 2,300 P.S.I.
5. THIS CHART IS NOT APPLICABLE TO VERTICAL BENDS. LOCATION SPECIFIC DESIGN IS REQUIRED FOR SUCH INSTALLATIONS.
6. WHERE THE TRENCH SOIL HAS A BEARING PRESSURE LESS THAN 2000 POUNDS PER SQUARE FOOT, LOCATION SPECIFIC DESIGN IS REQUIRED.

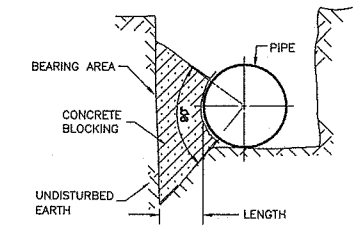

STANDARD TEMPORARY BLOWOFF ASSEMBLY N.T.S.

FIGURE "A"

MAIN DIAMETER	BLOW-OFF DIAMETER
<12"	2" MINIMUM
≥12"	4" MINIMUM

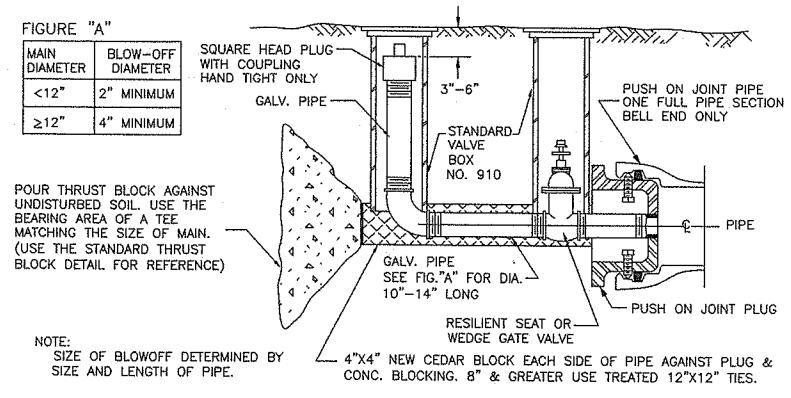

NOTE:
SIZE OF BLOWOFF DETERMINED BY SIZE AND LENGTH OF PIPE.

STANDARD WATER PIPE BEDDING & BACKFILL

TRENCH DETAIL N.T.S.

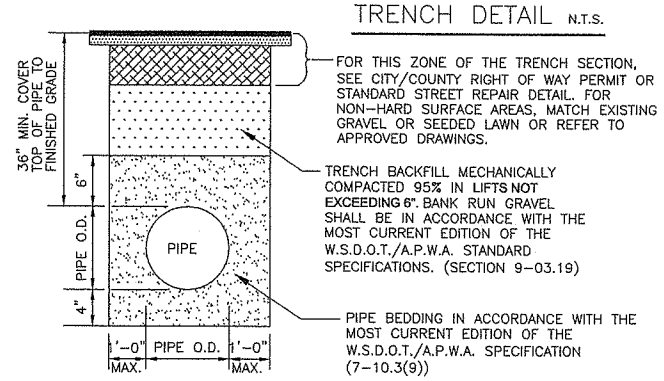

PIPE AND CASING DETAIL N.T.S.

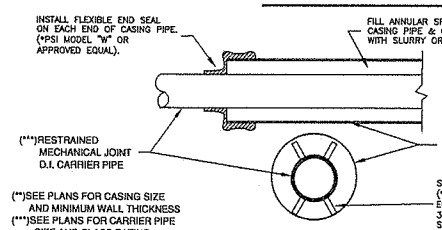

(**)SEE PLANS FOR CASING SIZE AND MINIMUM WALL THICKNESS
(***)SEE PLANS FOR CARRIER PIPE SIZE AND CLASS RATING

*Pipeline Seal and Insulator, Inc.

1. PUBLIC AND PRIVATE MAINS SHALL BE PLACED IN SEPARATE CASINGS.
2. WRITTEN PERMISSION FROM THE OWNER OF THE RAILROAD TRACKS IS REQUIRED PRIOR TO OBTAINING CITY OF VANCOUVER PERMITS TO PROCEED.
3. NO PRIVATE UTILITIES SHALL BE ALLOWED IN CITY OF VANCOUVER CASINGS.

STANDARD NOTES:

GENERAL:

Materials and construction methods shall be in conformance with the most current version of the STANDARD SPECIFICATIONS for ROAD, BRIDGE & MUNICIPAL CONSTRUCTION" as prepared by Washington State Department of Transportation and the Washington State Chapter of the APWA, except as noted herein. All references to American Water Works Association (AWWA) standards shall mean their latest revision. Operation of, or connection, to existing city water facilities shall only be performed under the observation of authorized City personnel.

DUCTILE IRON PIPE:

All water main pipe furnished shall be new ductile iron (DI) pipe conforming to the requirements of AWWA C151. Pipe sizes 12 inch and smaller shall be Class 52 and pipe 14 inch and larger shall be Class 51 or Pressure Class 350, unless otherwise noted on the plans.
All pipe shall be furnished in 18 to 20 foot lengths and shall be cement lined per AWWA C104.
All rubber gasket joints for ductile iron shall conform to the requirements of AWWA C111.

DUCTILE IRON FITTINGS:

All fittings shall conform to the requirements of AWWA C110 or C153.
Fittings shall be of the size, type and type of joint as called for on the plans. All fittings shall have a pressure rating 250 psi minimum. All fittings shall be ductile iron unless approved by the City.
All ductile iron fittings shall be cement lined.
All compact fittings shall be DI, cement lined, and be pressure rated to 350 psi.
All rubber gasket joints for ductile iron fittings shall conform to the requirements of AWWA C111.
All reducers 6 inch and larger shall be restrained.
All vertical elbow installations shall be engineered and calculations submitted with plans to the City's Engineering Division for approval.
Bolts for buried flanged fittings shall be galvanized or zinc-cadmium plated and coated with 2 coats of bitumastic after installation. Bolts for mechanical joints shall be NSS Corten steel or Ductile iron only.
No Flg x Flg fittings allowed, except compound meter installation, DCVA and RPBA details.

RESTRAINED JOINT PIPE:

All Restrained Joint Pipe, as called for on the plans, and shall be either TR Flex by US Pipe, LoK Ring by American Pipe or approved equal.

ALLOWABLE JOINT RESTRAINT SYSTEMS:

On water main fittings and valves 12 inch dia. and smaller, mechanical joint restraining glands, Megalug brand or approved equal may be used in lieu of thrust blocks. See "Design Requirements" section 2-1.11 regarding the number of joints adjacent to a fitting that must be restrained. The min. working press. rating of restrained joint systems shall be 350 psi. Restraining gaskets may be used where thrust restraint is req'd. for push-on joint (Tyton) pipe, 12 inch or smaller. Restraining gaskets shall be US Field Lok or approved equal and installed as per manufacturer's written instructions. Tie rods as joint restraint shall not be allowed.

VALVES:

Resilient-seated gate valves may be used for valve installations of 8 inch and smaller and shall be used on all fire hydrant and fire protection service.
Resilient-seated gate valves shall be conform to AWWA C509 and shall be epoxy coated on the inside.
Butterfly valves may be used for installations of 6 inch and 8 inch, except for hydrant and fire protection.
Butterfly valves shall be used for all valve installations of 10 inch and larger.
Butterfly valves shall conform to AWWA C504 and shall be class 150-B with short body.
Butterfly valves shall be required to have a minimum of 28 turns to move fully open to fully closed. The operator shall be mounted directly on the valve with no exposed or external couplings. Units shall be fully gasketed and grease packed. Valves shall be installed with the operator on the side of the pipe nearest the road centerline. All valves shall be furnished with an underground manual (AWWA 2 inch square) operator opening with a counterclockwise rotation. Install the operator nut such that the depth from finish grade to the operator nut will not exceed 18 inches.
No Flg x Flg valves allowed.

VALVE BOXES:

Valve boxes shall be Pattern No. 910, cast iron or approved equal. Valve box extensions shall be one piece and constructed of 6" ASTM D 3034 SDR 35 PVC pipe.
Valve boxes not set in paved areas, shall be set in a concrete or asphalt pad. (24 inches square, 4 inches thick)

STANDARD AIR RELEASE VALVES:

Manual and combination air release valves are to be furnished as called for in the plans. Valves shall be of the size indicated and shall be suitable for working pressure of 150 p.s.i.
All air release valves shall be installed at the crest of pipe runs.
Valves shall be APCO No. 145C or approved equal.

STANDARD BLOWOFF ASSEMBLY:

Standard blowoff assemblies are to be placed 1 foot from the end of a dead end main, when the main will not be extended. Standard blowoff assemblies shall be placed at low points in the main, as indicated in the plans, to allow for main cleaning.

STANDARD TEMPORARY BLOWOFF ASSEMBLY:

Temporary construction blowoff assemblies shall be placed on the end of water mains that will be extended, or connected to at a later date.

TAPPING SLEEVES:

Tapping sleeves shall be rated at 150 p.s.i. working pressure with ANSI/AWWA C207 Class D 150 pound flanges or equivalent stainless steel pattern. All sleeves shall be designated by the manufacturer as suitable for the service proposed. All fabricated steel tapping sleeves shall have fusion-applied epoxy coating. All stainless steel tapping sleeves shall have stainless steel nuts and bolts.
All bolts for the sleeve body shall be the drop-in type, not welded. All nuts and bolts shall be stainless steel (with nuts or bolts treated to prevent galling) or high-strength, low alloy steel bolts with the steel meeting ANSI/AWWA C111/A21.11 specifications. After a tap is made, all exposed areas of the pipe and sleeve shall be coated with either bitumastic coating or Brown primer and Trenton #1 wax or approved equal.
Tapping sleeve gaskets shall be NSF approved for potable water.
Sleeves shall be tested, on the pipe, at 150 p.s.i. for 15 minutes with no pressure drop prior to making the tap.
All sleeves shall have a test outlet and plug.
Concrete blocking for sleeves shall be the same as required for an equal sized tee.
Sleeves furnished for ductile iron pipe taps, reduced outlet taps on steel pipe, or reduced outlet taps on cast iron pipe larger than 12 inch, shall be fabricated steel with outlet gasket. JCM 412, Dresser style 610, Smith-Blair 622, Romac FTS420, Ford FTSC or approved equal. For reduced outlet taps on steel, JCM 422 is also approved.
Size on size taps on steel pipe shall not be allowed.
Tapping sleeves furnished for taps on cast iron 12 inch and smaller, or taps on asbestos cement pipe, shall be stainless steel with full circumferential gasket: Romac SST III, JCM 432, Smith-Blair 664/5, Dresser 630, Ford FTSS or approved equal.
Tapping sleeves for pipes not listed above must be approved by the City.

TAPPING VALVES:

Tapping valves shall have the same construction as specified for gate valves.
Inlet end of valve shall be flanged and outlet end shall be mechanical joint.
Tapping valves shall be supported by an 8"x8" concrete block prior to making the tap.
Tapping sleeves and valves shall be used only when specifically called for on the plans.

STANDARD FIRE HYDRANT ASSEMBLY:

All fire hydrants shall conform to AWWA standard specifications (C-502) for fire hydrants.
All hydrants shall be of the latest design that the manufacturer is producing.
All hydrants shall be 3 port with (2) 2-1/2 inch hose nozzles with national standard fire hose coupling screw thread, 7-1/2 threads per inch, and (1) 4-1/2 inch steamer nozzle with storz quick connect fitting or equal.
Quick connect coupling: Aluminum alloy hydrant adapters shall be 5 inches and secured to steamer nozzle if adapter is threaded on steamer nozzle. Each unit shall have 1/4 inch #20 thread stainless steel set screws for permanently securing adapters to hydrant. Each unit will have a blind cap with plastic coated aircraft cable attaching it to the hydrant steamer post. Facing on the adapter shall be metal and not rubber gasketing to avert sticking during freezing weather conditions. The blind cap shall fit the adapter tight enough so that it cannot be removed without a spanner wrench.
All hydrant nozzle caps must be installed with gaskets.
All hydrants shall have 'O' ring seals on the operating stem. All working parts shall be of bronze and all 'O' ring surfaces shall be rust-free material. The compression hydrant operating threads shall be lubricated and shall be 'O' ring sealed from water, moisture and foreign matter. The operating nut shall be 1-1/2" square.
The center of the lowest port shall be at least 17 inches from the ground bury mark.
All hydrants shall be constructed with mechanical joint connections and provisions shall be made to automatically drain the barrel in order to protect the unit from freezing. The barrel shall be a minimum 7 inches I.D. and of such length as to be suitable for installation with connections to piping. Minimum barrel length shall be 28-1/4 inches. All working parts shall be removable through the top of the hydrant without the necessity of digging. All hydrants shall have the interior and exterior prepared and coated or painted per AWWA standard C502. The exterior of the barrel shall be factory painted safety yellow. The storz adapter shall not be painted. Tie rods in lieu of thrust blocks are not approved joint restraint, and will not be allowed.

TRENCH EXCAVATION, BEDDING AND BACKFILL:

The existing road surface shall be cut in a neat line by saw cutting or wheel cutter prior to removal.
Trench backfill shall be according to the backfill section, shown on the plans and/or the utility permit.
All excess material not used for trench backfill shall be removed and disposed of by the contractor.
Placement of backfill shall be brought up to substantially the same rate on both sides of the pipe and care shall be taken so that the pipe is not floated or displaced. During construction, the contractor shall stockpile the excavated trench materials so as to do the least damage to adjacent lawns, gardens, shrubbery, trees or fences, regardless of the ownership of these areas. All excavated materials shall be removed from these areas, and these surfaces shall be left in a condition equivalent to or better than their original condition and free from all rocks, gravel, boulders or foreign material. Replace topsoil areas as specified. All existing drainage ditches and culverts shall be reopened and graded, and original drainage restored. All damaged irrigation, house drainage pipe, drain tiles, sewer laterals and culverts shall be repaired or replaced. All clearing, grubbing and stripping shall be performed in advance of excavation operations. All weeds, roots, trash, debris and similar objectionable materials shall be removed from excavation areas. All asphalt rubble, rocks, trash or debris shall be hauled away. Asphalt pavement shall be neatly saw-cut at designated limits and shall be removed and hauled away.

COMPACTION OF BACKFILL:

The inspector may conduct periodic testing of backfill compaction, using a nuclear densometer, at intervals of his choosing. The contractor shall provide safe trench conditions at all times for testing any depth.
Compaction control tests to determine optimum moisture content and maximum density shall be by the following methods:

1. For non-granular materials - Method of test for compaction control of non-granular materials (WSDOT Test Method No. 609)
2. For granular materials - Method of test for compaction control of granular materials (WSDOT Test Method No. 606)
3. Field moisture and density of backfill material shall be determined by the Nuclear Moisture/Density Gauge.

The contractor shall fill all open trenches at the completion of each day's work. Open trenches overnight shall not be allowed. Trenches filled but not compacted shall be re-excavated the following working day and compacted according to these specifications.

CUTTING AND PLUGGING EXISTING PIPE:

Where shown on the plans, the contractor shall cut and plug the existing main. The existing main, which is to be abandoned, shall have a concrete plug poured around and in the end of the pipe to be abandoned and the part of the main which is to remain shall have a new metal cap or plug installed on the existing pipe, cross or tee, or shall be connected to the new fitting or pipe with thrust restraint. All valve boxes on mains which are abandoned (cut and plugged) shall be removed and the holes shall be patched to match finished surface.

CUTTING PIPE:

Cutting of all pipe and specifically asbestos cement pipe shall conform to the latest rules and regulations of the Department of Labor and Industries.

WATER SERVICES:

Water services are to be installed by the contractor, inspected by the City. Call (360) 696-8050 48 hours in advance.
Water meters will be installed by the City only when the following have been satisied:

1. Acceptance of newly installed mains and services by the Construction Manager including:
   a. Disinfection, flushing and testing mains.
   b. Submittal and approval of record drawings.
2. Payment of required hook-up fees and main charges.

The minimum water service size to be installed shall be 1 inch, constructed of seamless type K soft anealed copper.

ABANDONING A WATER SERVICE:

If an existing meter is to be taken out of service, when the main is not being abandoned, the service shall be abandoned by turning off the corporation stop at the main, followed by cutting and plugging the service just after the corporation stop and removing the box and meter set (yoke).

HYDROSTATIC TESTING:

All sizes of pipe shall be tested hydrostatically as per the requirements of section 7-11.3(11) in the most current version of the W.S.D.O.T. Standard Specifications or at 150 p.s.i. for 15 minutes with no pressure drop.

DISINFECTING WATER MAINS:

Disinfection and bacteriological testing of water mains shall conform to the requirements of AWWA C651.

PREVENTING REVERSE FLOW:

Pipelines that have not been disinfected may be connected to the existing distribution system with a pre-tested closed inline valve and only at points approved by the Engineer. The contractor shall supply documentation from the valve supplier certifying that the valve has been pre-tested.

REVISIONS

DATE	By	APPRV.	
4/90	RJH	TDM	REVISED SPECIFICATIONS AND DETAILS
1/93	PCJ	JNR	REVISED SPECIFICATIONS AND DETAILS
10/94	TT/SH	JNR	REVISED SPECIFICATIONS AND DETAILS
12/98	TLT	JNR	REVISED SPECIFICATIONS AND DETAILS
10/01	GH/TT	PGE	REVISED SPECIFICATIONS AND DETAILS

STANDARD WATER LINE DETAILS
SHEET 2

Approved By: 1 Dec 27 2001
ENGINEER DATE

SHEET OF

ENGINEERING SERVICES
WATER ENGINEERING
P.O. BOX 1995
VANCOUVER, WA 98668-1995
(360) 696-8223
FAX: (360) 696-8490
www.ci.vancouver.wa.us

CITY OF VANCOUVER WASHINGTON

CALL 2 BUSINESS DAYS BEFORE YOU DIG 1-800-553-4344 "It's the Law"
CLARK COUNTY UTILITIES COORDINATING COUNCIL

CALL 48 HOURS BEFORE YOU DIG 1-800-553-4344 "It's the Law"
NORTHWEST UTILITIES NOTIFICATION CENTER

STATE OF WASHINGTON 22994 REGISTERED PROFESSIONAL ENGINEER
12-27-04
EXPIRES: JUNE 22, 2004

DESIGNED	
DRAWN	
CRP	#320922
HOR.	N/A
VERT.	N/A
DATE	01-23-04
DWG.	WP2
SHEET 22	OF 40

DESIGN & ENGINEERING DIVISION
DESIGN SECTION

NE 76TH STREET
STANDARD WATER LINE DETAILS

CLARK COUNTY WASHINGTON
proud past, promising future

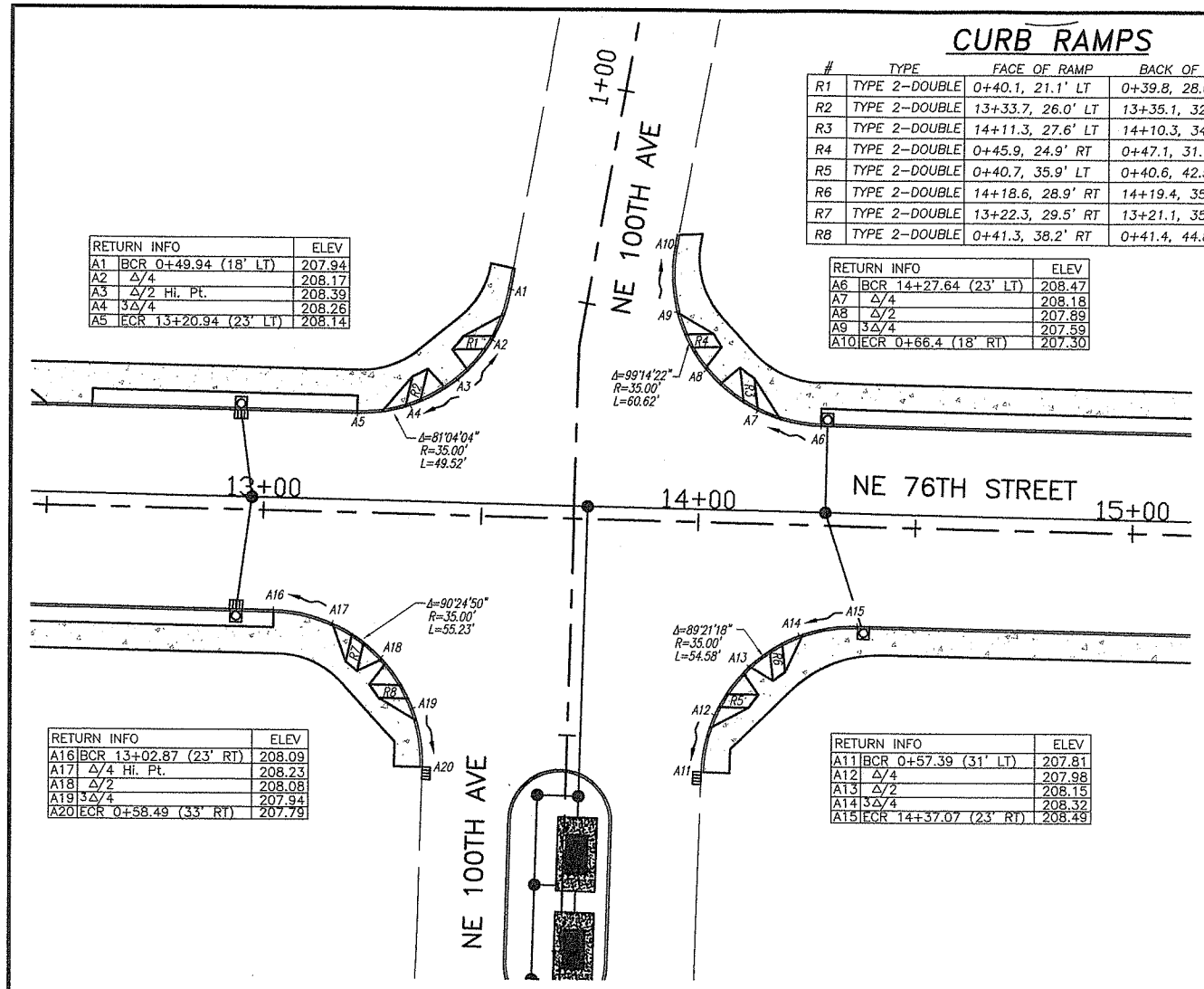

CURB RAMPS

#	TYPE	FACE OF RAMP	BACK OF RAMP
R1	TYPE 2–DOUBLE	0+40.1, 21.1' LT	0+39.8, 28.0' LT
R2	TYPE 2–DOUBLE	13+33.7, 26.0' LT	13+35.1, 32.8' LT
R3	TYPE 2–DOUBLE	14+11.3, 27.6' LT	14+10.3, 34.8' LT
R4	TYPE 2–DOUBLE	0+45.9, 24.9' RT	0+47.1, 31.1' RT
R5	TYPE 2–DOUBLE	0+40.7, 35.9' LT	0+40.6, 42.5' LT
R6	TYPE 2–DOUBLE	14+18.6, 28.9' RT	14+19.4, 35.1' RT
R7	TYPE 2–DOUBLE	13+22.3, 29.5' RT	13+21.1, 35.5' RT
R8	TYPE 2–DOUBLE	0+41.3, 38.2' RT	0+41.4, 44.8' RT

RETURN INFO		ELEV
A1	BCR 0+49.94 (18' LT)	207.94
A2	Δ/4	208.17
A3	Δ/2 Hi. Pt.	208.39
A4	3Δ/4	208.26
A5	ECR 13+20.94 (23' LT)	208.14

RETURN INFO		ELEV
A6	BCR 14+27.64 (23' LT)	208.47
A7	Δ/4	208.18
A8	Δ/2	207.89
A9	3Δ/4	207.59
A10	ECR 0+66.4 (18' RT)	207.30

RETURN INFO		ELEV
A16	BCR 13+02.87 (23' RT)	208.09
A17	Δ/4 Hi. Pt.	208.23
A18	Δ/2	208.08
A19	3Δ/4	207.94
A20	ECR 0+58.49 (33' RT)	207.79

RETURN INFO		ELEV
A11	BCR 0+57.39 (31' LT)	207.81
A12	Δ/4	207.98
A13	Δ/2	208.15
A14	3Δ/4	208.32
A15	ECR 14+37.07 (23' RT)	208.49

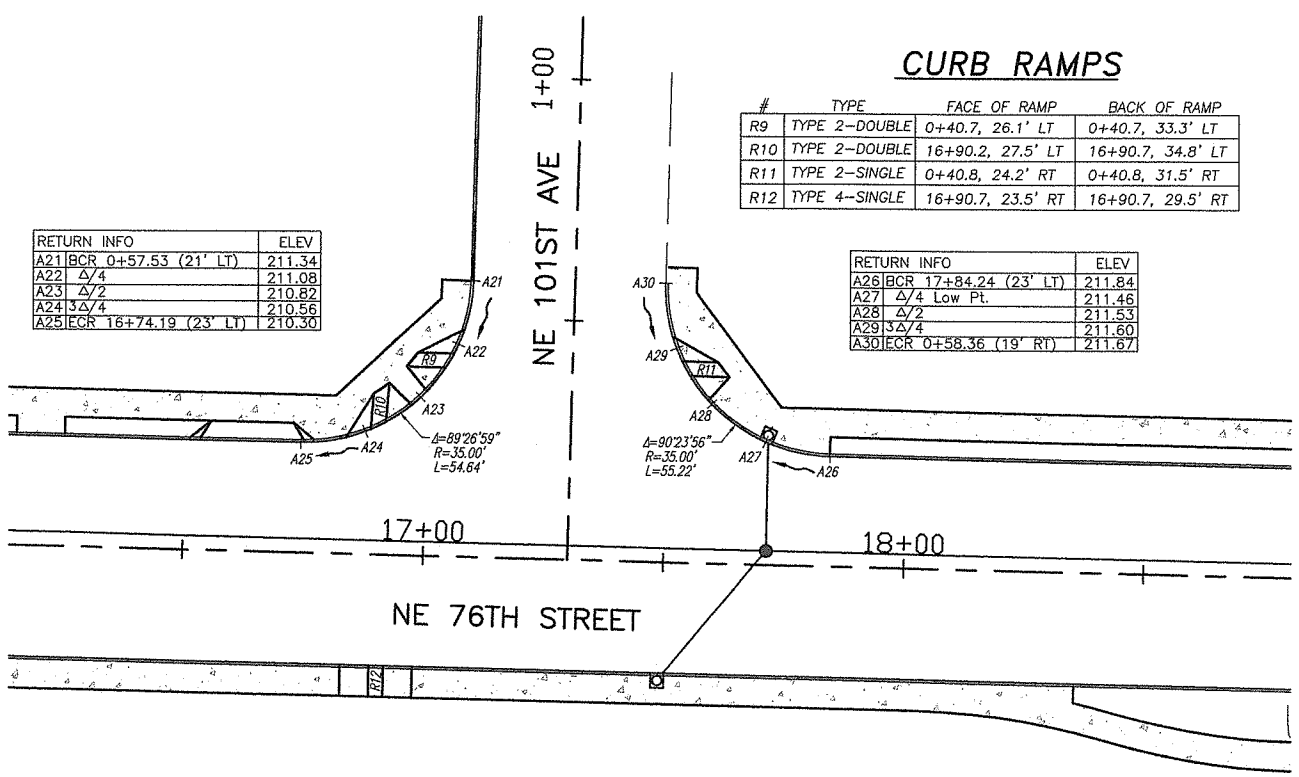

CURB RAMPS

#	TYPE	FACE OF RAMP	BACK OF RAMP
R9	TYPE 2–DOUBLE	0+40.7, 26.1' LT	0+40.7, 33.3' LT
R10	TYPE 2–DOUBLE	16+90.2, 27.5' LT	16+90.7, 34.8' LT
R11	TYPE 2–SINGLE	0+40.8, 24.2' RT	0+40.8, 31.5' RT
R12	TYPE 4–SINGLE	16+90.7, 23.5' RT	16+90.7, 29.5' RT

RETURN INFO		ELEV
A21	BCR 0+57.53 (21' LT)	211.34
A22	Δ/4	211.08
A23	Δ/2	210.82
A24	3Δ/4	210.56
A25	ECR 16+74.19 (23' LT)	210.30

RETURN INFO		ELEV
A26	BCR 17+84.24 (23' LT)	211.84
A27	Δ/4 Low Pt.	211.46
A28	Δ/2	211.53
A29	3Δ/4	211.60
A30	ECR 0+58.36 (19' RT)	211.67

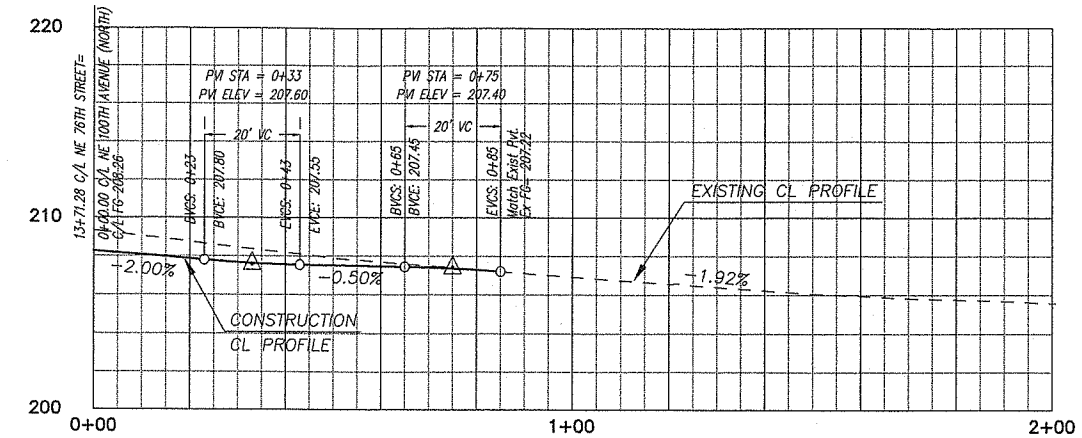

NE 100th Avenue North

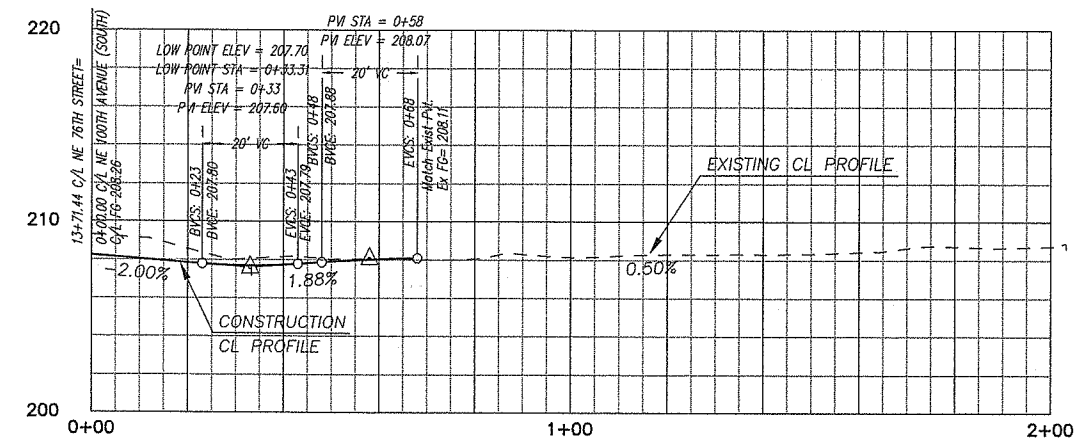

NE 100th Avenue South

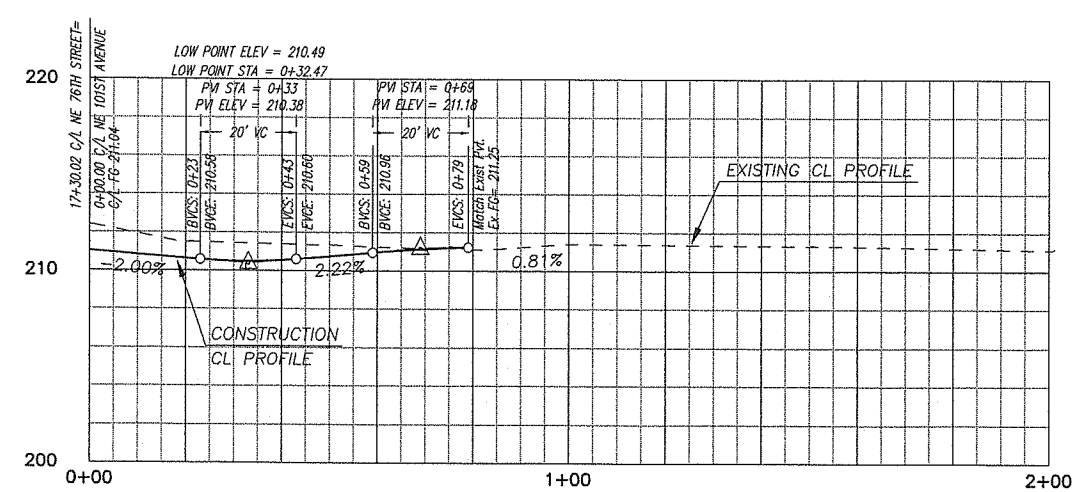

NE 101st Avenue

DESIGNED SLF
DRAWN BY
CRP #320922
HOR. 1"=20'
VERT. 1"=5'
DATE 01-23-04
DWG: 101
SHEET 23 OF 40

CALL 48 HOURS BEFORE YOU DIG
1-800-553-4344
"It's the Law"
NORTHWEST UTILITIES NOTIFICATION CENTER

STATE OF WASHINGTON
DONALD L. MORI
22894
REGISTERED PROFESSIONAL ENGINEER
7-26-04
EXPIRES: JUNE 22, 2004

DESIGN & ENGINEERING DIVISION
DESIGN SECTION

NE 76TH STREET
INTERSECTION PLAN

proud past, promising future
CLARK COUNTY
WASHINGTON

DATE PLOTTED: Jan 23, 2004 – 4:18pm M&S DRAWING FILE: W:\DWG\13500\13573\Final Design\13573N-2.dwg

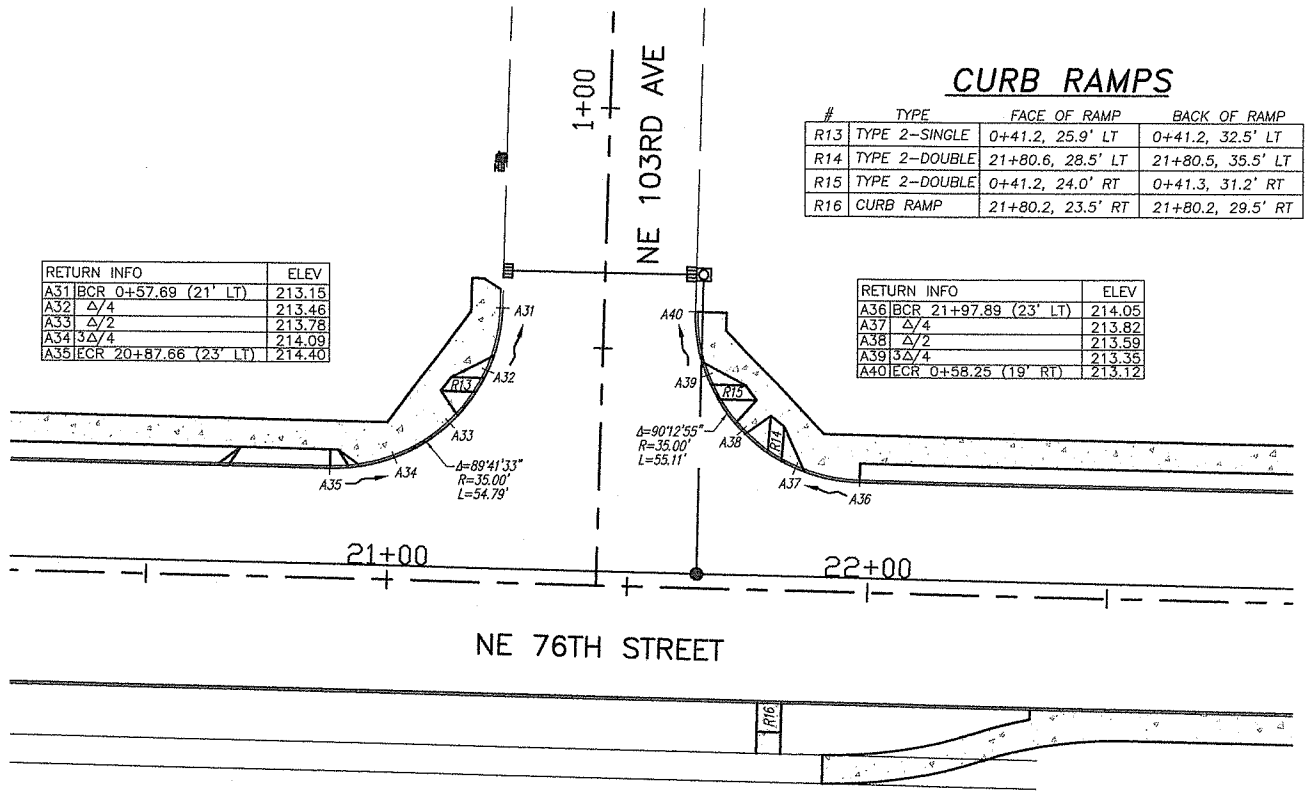

CURB RAMPS

#	TYPE	FACE OF RAMP	BACK OF RAMP
R13	TYPE 2–SINGLE	0+41.2, 25.9' LT	0+41.2, 32.5' LT
R14	TYPE 2–DOUBLE	21+80.6, 28.5' LT	21+80.5, 35.5' LT
R15	TYPE 2–DOUBLE	0+41.2, 24.0' RT	0+41.3, 31.2' RT
R16	CURB RAMP	21+80.2, 23.5' RT	21+80.2, 29.5' RT

RETURN INFO	ELEV
A31 BCR 0+57.69 (21' LT)	213.15
A32 Δ/4	213.46
A33 Δ/2	213.78
A34 3Δ/4	214.09
A35 ECR 20+87.66 (23' LT)	214.40

RETURN INFO	ELEV
A36 BCR 21+97.89 (23' LT)	214.05
A37 Δ/4	213.82
A38 Δ/2	213.59
A39 3Δ/4	213.35
A40 ECR 0+58.25 (19' RT)	213.12

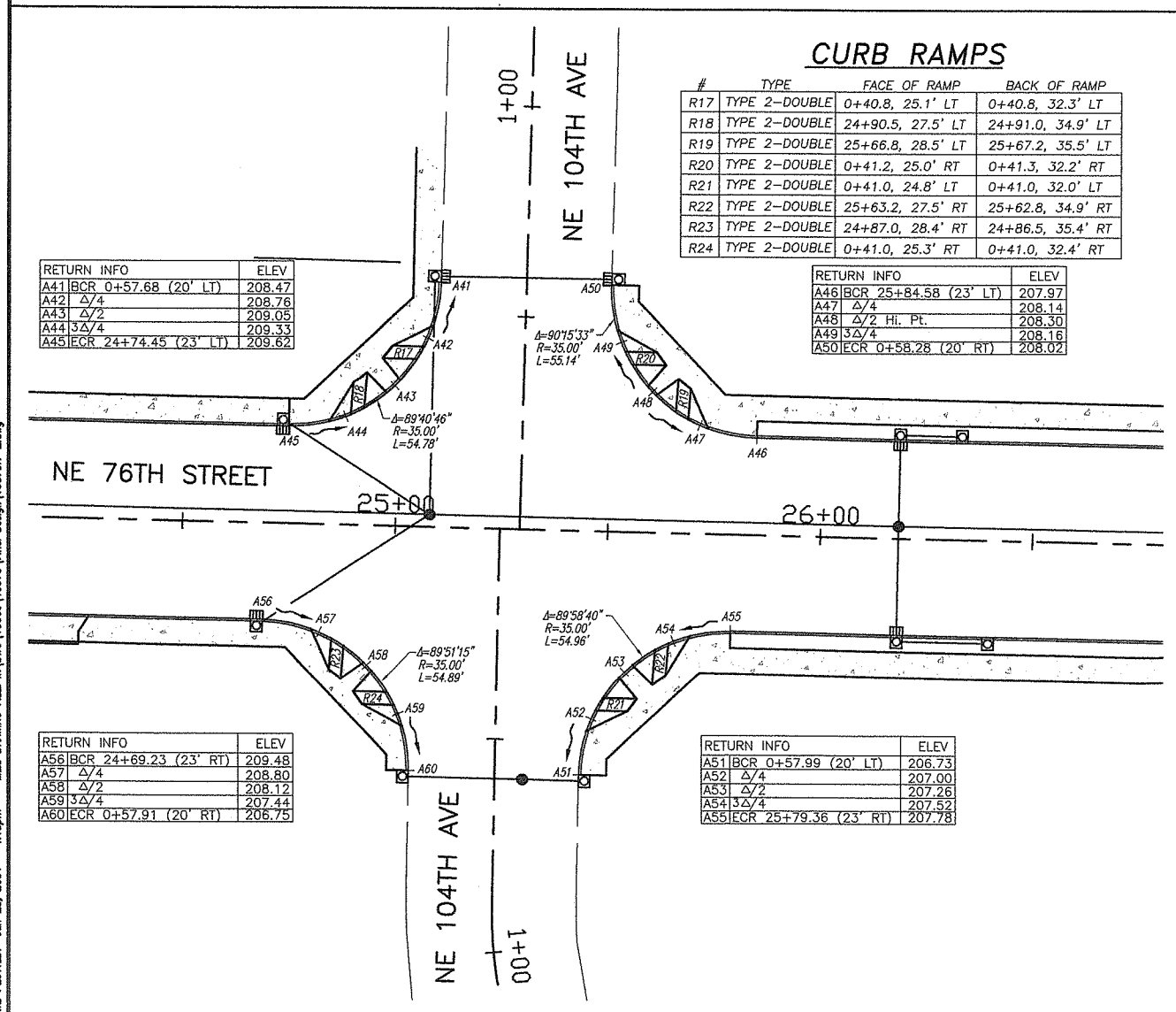

CURB RAMPS

#	TYPE	FACE OF RAMP	BACK OF RAMP
R17	TYPE 2–DOUBLE	0+40.8, 25.1' LT	0+40.8, 32.3' LT
R18	TYPE 2–DOUBLE	24+90.5, 27.5' LT	24+91.0, 34.9' LT
R19	TYPE 2–DOUBLE	25+66.8, 28.5' LT	25+67.2, 35.5' LT
R20	TYPE 2–DOUBLE	0+41.2, 25.0' RT	0+41.3, 32.2' RT
R21	TYPE 2–DOUBLE	0+41.0, 24.8' LT	0+41.0, 32.0' LT
R22	TYPE 2–DOUBLE	25+63.2, 27.5' RT	25+62.8, 34.9' RT
R23	TYPE 2–DOUBLE	24+87.0, 28.4' RT	24+86.5, 35.4' RT
R24	TYPE 2–DOUBLE	0+41.0, 25.3' RT	0+41.0, 32.4' RT

RETURN INFO	ELEV
A41 BCR 0+57.68 (20' LT)	208.47
A42 Δ/4	208.76
A43 Δ/2	209.05
A44 3Δ/4	209.33
A45 ECR 24+74.45 (23' LT)	209.62

RETURN INFO	ELEV
A46 BCR 25+84.58 (23' LT)	207.97
A47 Δ/4	208.14
A48 Δ/2 Hi. Pt.	208.30
A49 3Δ/4	208.16
A50 ECR 0+58.28 (20' RT)	208.02

RETURN INFO	ELEV
A56 BCR 24+69.23 (23' RT)	209.48
A57 Δ/4	208.80
A58 Δ/2	208.12
A59 3Δ/4	207.44
A60 ECR 0+57.91 (20' RT)	206.75

RETURN INFO	ELEV
A51 BCR 0+57.99 (20' LT)	206.73
A52 Δ/4	207.00
A53 Δ/2	207.26
A54 3Δ/4	207.52
A55 ECR 25+79.36 (23' RT)	207.78

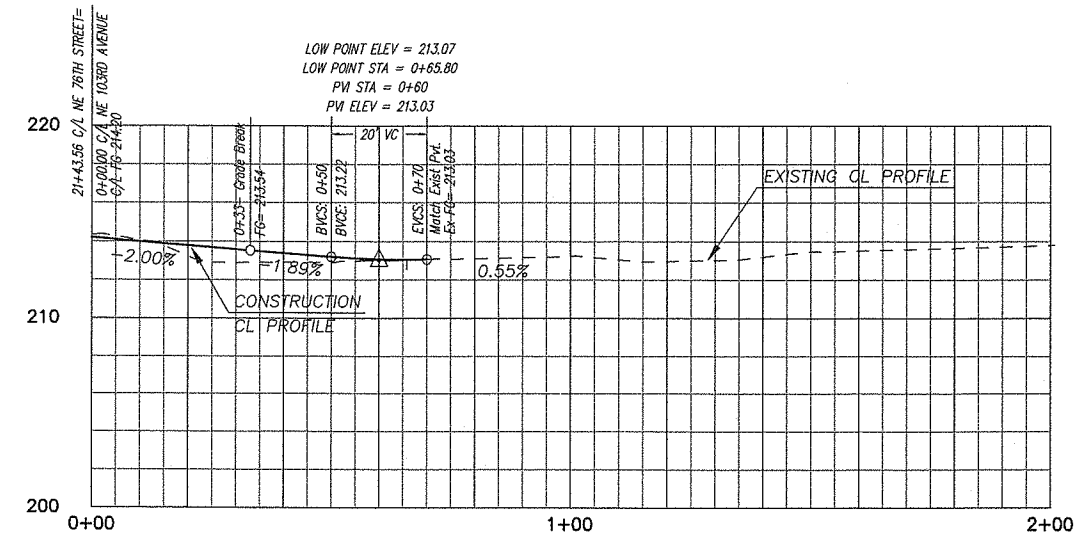

NE 103rd Avenue

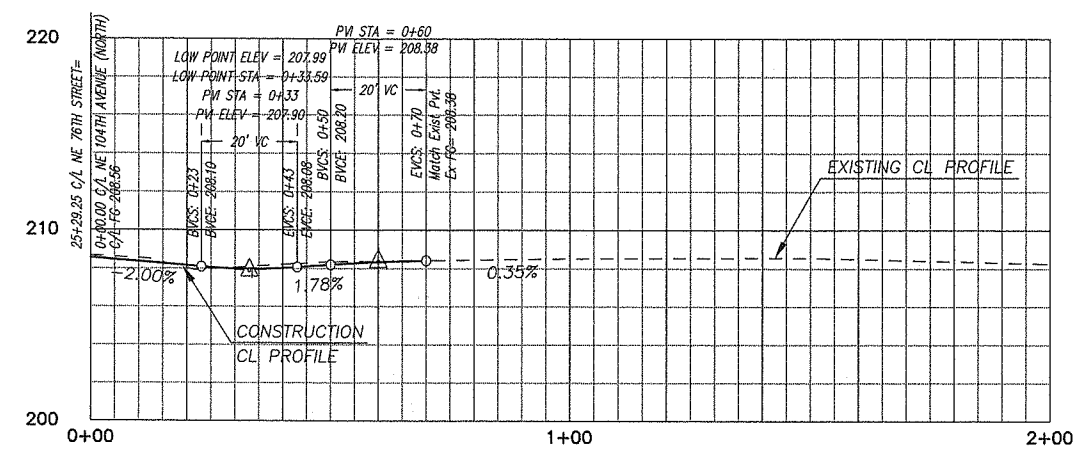

NE 104th Avenue North

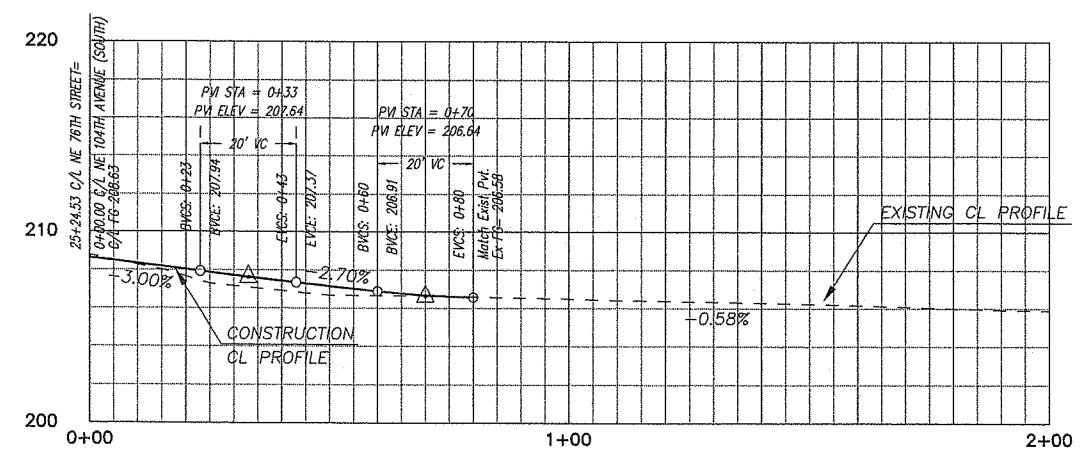

NE 104th Avenue South

DESIGNED	SF
DRAWN	BY
CRP	#320922
HOR.	1"=20'
VERT.	1"=5'
DATE	01-23-04
DWG:	102
SHEET 24	OF 40

CALL 48 HOURS BEFORE YOU DIG
1-800-553-4344
"It's the Law"
NORTHWEST UTILITIES NOTIFICATION CENTER

STATE OF WASHINGTON
DONALD L. MORI
22594
REGISTERED PROFESSIONAL ENGINEER
EXPIRES: JUNE 22, 2004

DESIGN & ENGINEERING DIVISION
DESIGN SECTION

NE 76TH STREET
INTERSECTION PLAN

proud past, promising future
CLARK COUNTY
WASHINGTON

DATE PLOTTED: Jan 23, 2004 – 4:18pm MAS DRAWING FILE: W:\DWG\13500\13573\Final Design\13573H-2.dwg

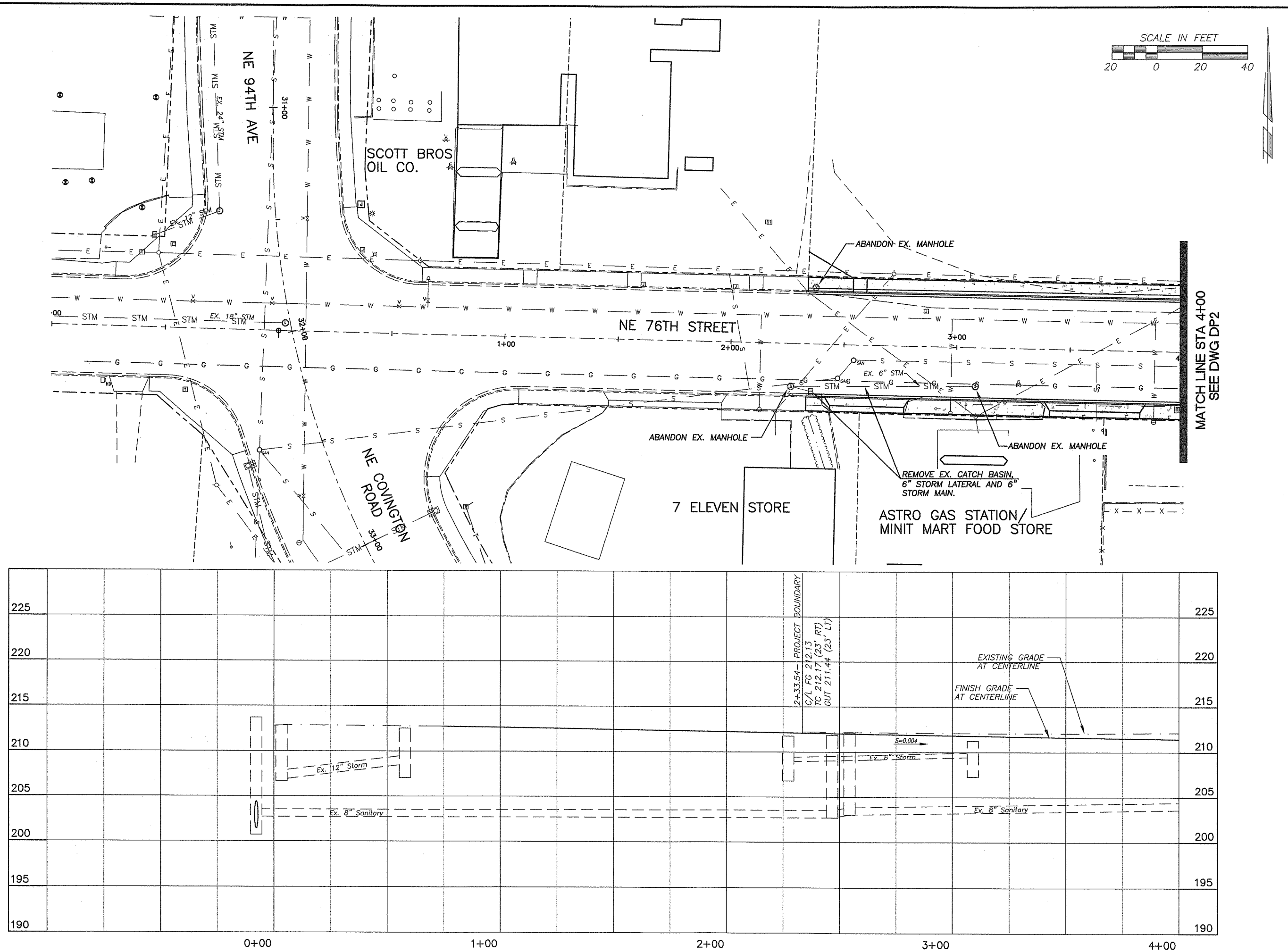

DESIGNED SLF
DRAWN SLF/AF
CRP #320922
HOR. 1"=20'
VERT. 1"=5'
DATE 01-23-04
DWG: DP1
SHEET 25 OF 40

CALL 48 HOURS BEFORE YOU DIG
1-800-553-4344
"It's the Law"
NORTHWEST UTILITIES NOTIFICATION CENTER

STATE OF WASHINGTON
RONALD J. MOFFITT
22954
REGISTERED PROFESSIONAL ENGINEER
1-26-04
EXPIRES: JUNE 23, 2004

DESIGN & ENGINEERING DIVISION
DESIGN SECTION

NE 76TH STREET
DRAINAGE PLAN (B.O.P. TO 4+00)

proud past, promising future
CLARK COUNTY
WASHINGTON

DATE PLOTTED: Jan 23, 2004 – 3:37pm MAS DRAWING FILE: W:\DWG\13500\13573\Final Design\13573DP1-DP7.dwg

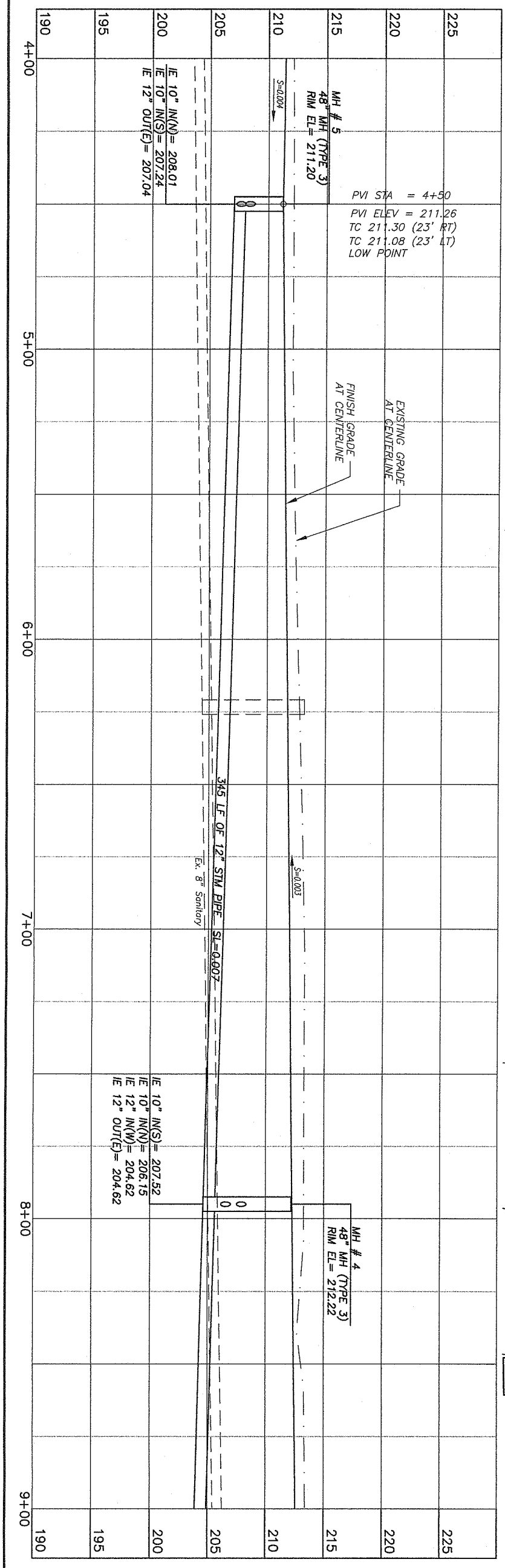

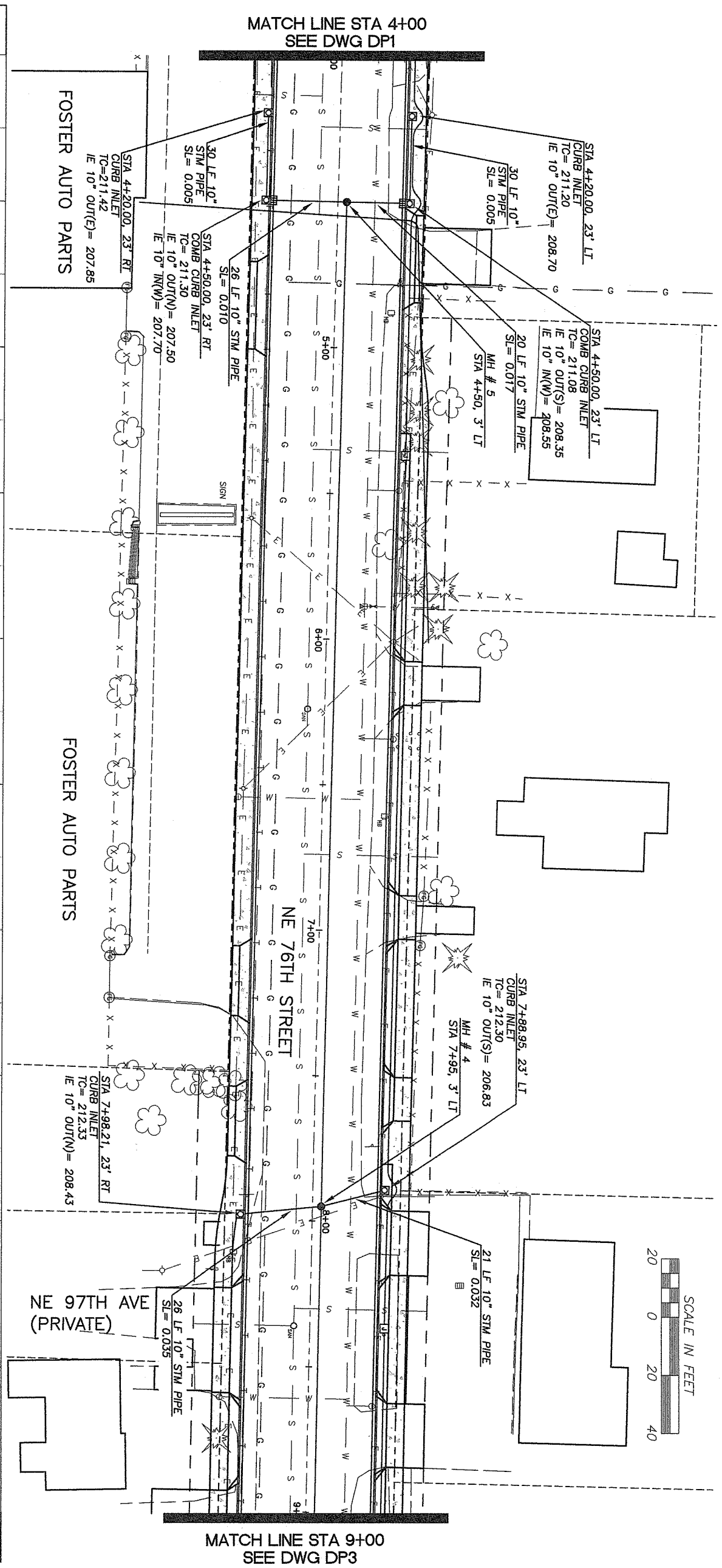

proud past, promising future

CLARK COUNTY
WASHINGTON

DESIGN & ENGINEERING DIVISION
DESIGN SECTION

NE 76TH STREET
DRAINAGE PLAN (4+00 TO 9+00)

DONALD J. MOE
STATE OF WASHINGTON
32994
REGISTERED
PROFESSIONAL ENGINEER
1-26-04
EXPIRES: JUNE 22, 2004

CALL 48 HOURS BEFORE YOU DIG
1-800-553-4344
"It's the Law"
NORTHWEST UTILITIES NOTIFICATION CENTER

DESIGNED	SLF
DRAWN	SLF/AF
CRP	#320922
HOR.	1"=20'
VERT.	1"=5'
DATE	01-23-04
DWG:	DP2
SHEET 26	OF 40

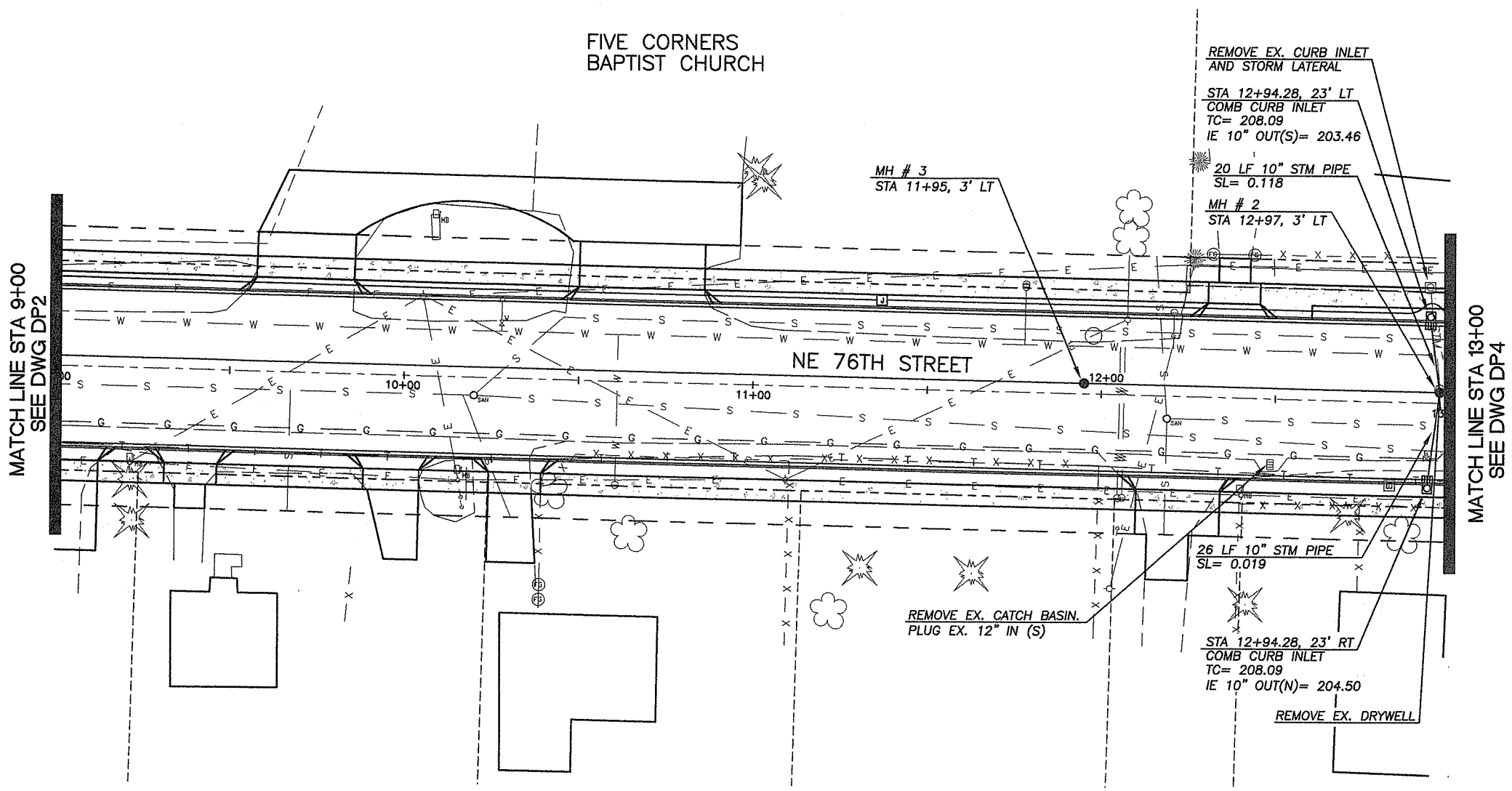

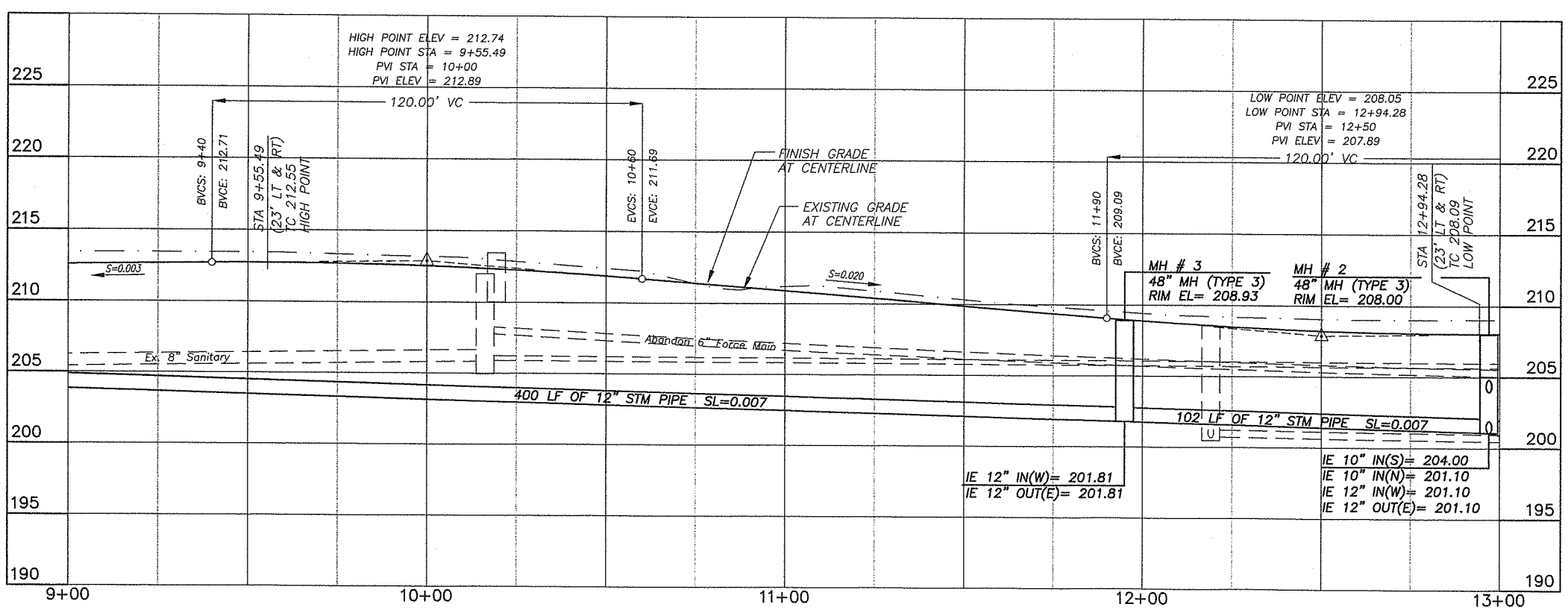

DESIGNED	SLF
DRAWN	SLF/AF
CRP	#320922
HOR.	1"=20'
VERT.	1"=5'
DATE	01-23-04
DWG:	DP3
SHEET 27	OF 40

CALL 48 HOURS BEFORE YOU DIG 1-800-553-4344 "It's the Law" NORTHWEST UTILITIES NOTIFICATION CENTER

DONALD MORRISON STATE OF WASHINGTON 22894 REGISTERED PROFESSIONAL ENGINEER 7-26-04 EXPIRES: JUNE 27, 2004

DESIGN & ENGINEERING DIVISION
DESIGN SECTION

NE 76TH STREET
DRAINAGE PLAN (9+00 TO 13+00)

proud past, promising future
CLARK COUNTY WASHINGTON

DATE PLOTTED: Jan 23, 2004 – 3:37pm MAS DRAWING FILE: W:\DWG\13500\13573\Final Design\13573DP1-DP7.dwg

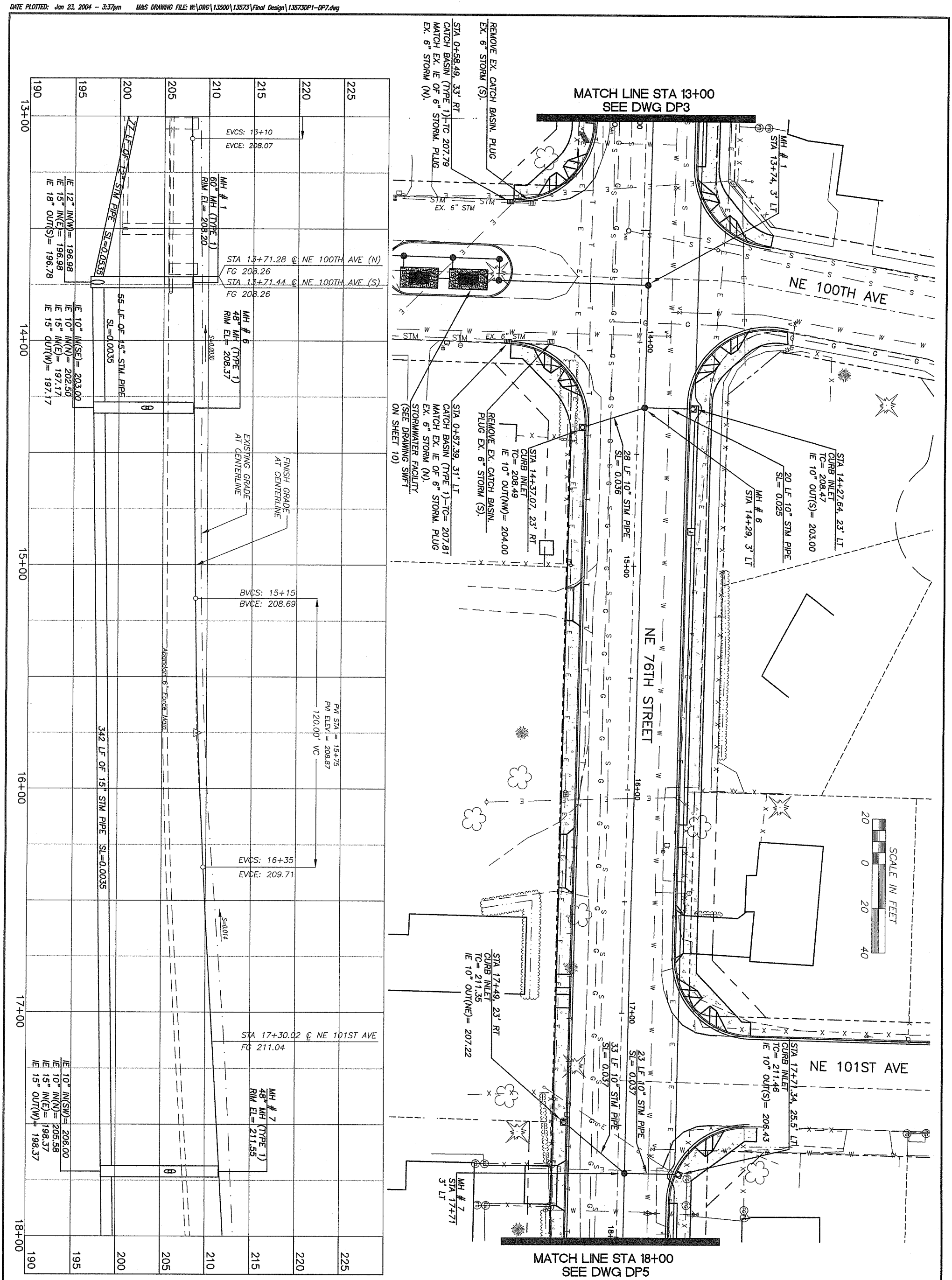

proud past, promising future

CLARK COUNTY
WASHINGTON

DESIGN & ENGINEERING DIVISION
DESIGN SECTION

NE 76TH STREET
DRAINAGE PLAN (13+00 TO 18+00)

DONALD J. MOE — STATE OF WASHINGTON — 22994 — REGISTERED PROFESSIONAL ENGINEER
1-26-04
EXPIRES: JUNE 22, 2004

CALL 48 HOURS BEFORE YOU DIG
1-800-553-4344
"It's the Law"
NORTHWEST UTILITIES NOTIFICATION CENTER

DESIGNED	SLF
DRAWN	SLF/AF
CRP	#320922
HOR.	1"=20'
VERT.	1"=5'
DATE	01-23-04
DWG:	DP4
SHEET 28	OF 40

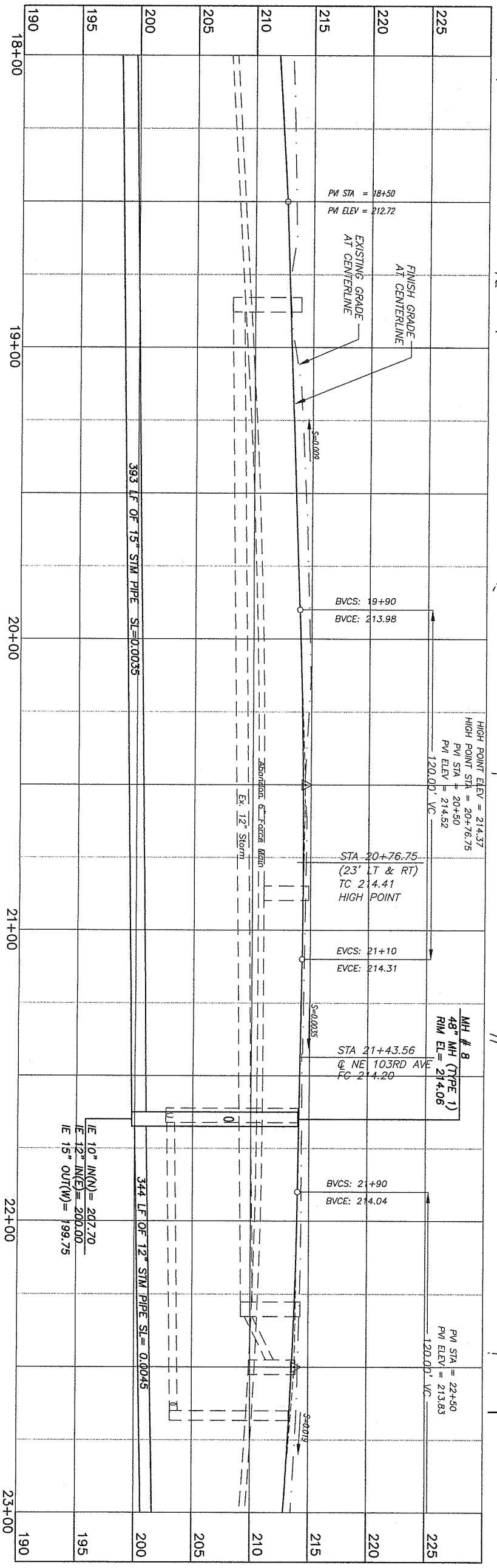

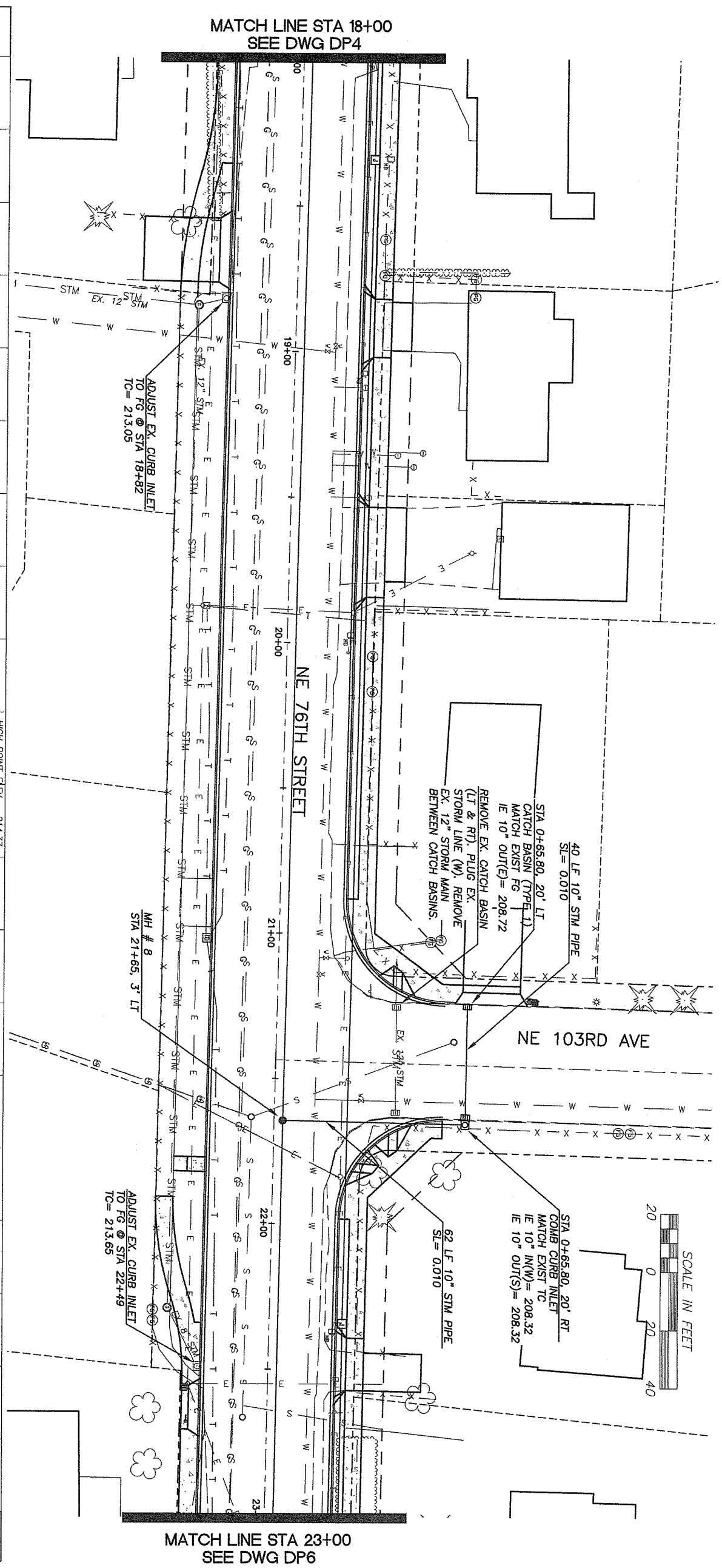

CLARK COUNTY
WASHINGTON
proud past, promising future

DESIGN & ENGINEERING DIVISION
DESIGN SECTION

NE 76TH STREET
DRAINAGE PLAN (18+00 TO 23+00)

DONALD J. MOE
STATE OF WASHINGTON
22994
REGISTERED
PROFESSIONAL ENGINEER
1-26-04
EXPIRES: JUNE 22, 2004

CALL 48 HOURS BEFORE YOU DIG
1-800-553-4344
"It's the Law"
NORTHWEST UTILITIES NOTIFICATION CENTER

DESIGNED	SLF
DRAWN	SLF/AF
CRP	#320922
HOR.	1"=20'
VERT.	1"=5'
DATE	01-23-04
DWG:	DP5
SHEET 29	OF 40

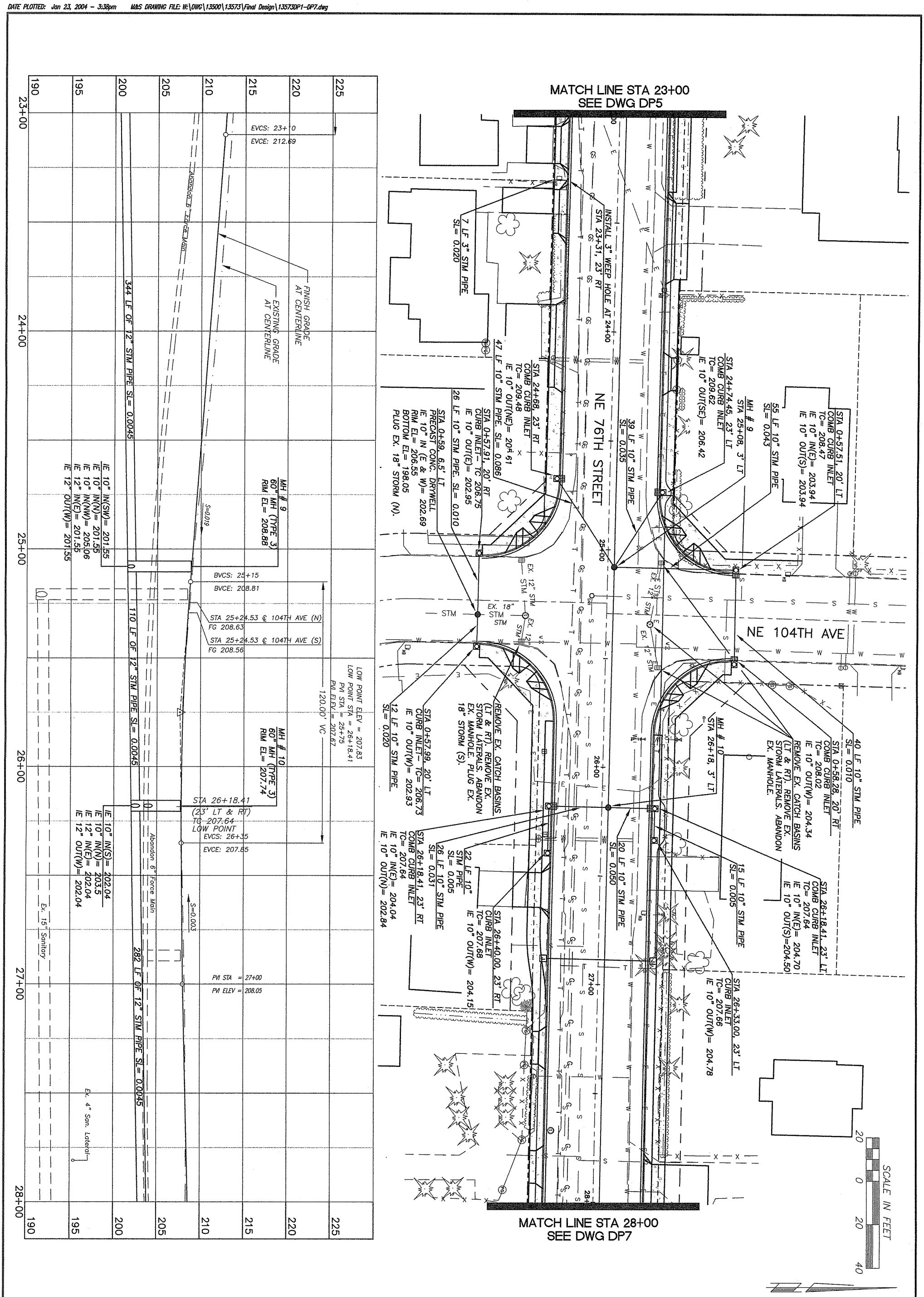

CLARK COUNTY WASHINGTON
proud past, promising future

DESIGN & ENGINEERING DIVISION
DESIGN SECTION

NE 76TH STREET
DRAINAGE PLAN (23+00 TO 28+00)

DONALD J. MOE, STATE OF WASHINGTON, 22994 REGISTERED PROFESSIONAL ENGINEER
1-26-04
EXPIRES: JUNE 22, 2004

CALL 48 HOURS BEFORE YOU DIG
1-800-553-4344
"It's the Law"
NORTHWEST UTILITIES NOTIFICATION CENTER

DESIGNED	SLF
DRAWN	SLF/AF
CRP	#320922
HOR.	1"=20'
VERT.	1"=5'
DATE	01-23-04
DWG:	DP6
SHEET	30 OF 40

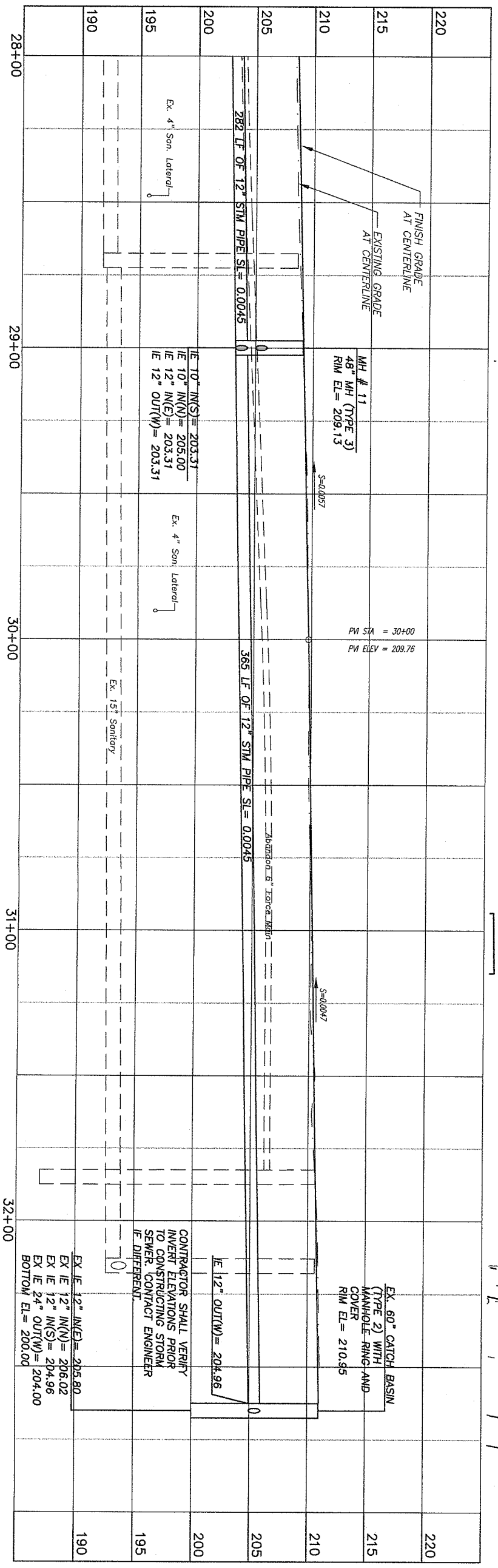

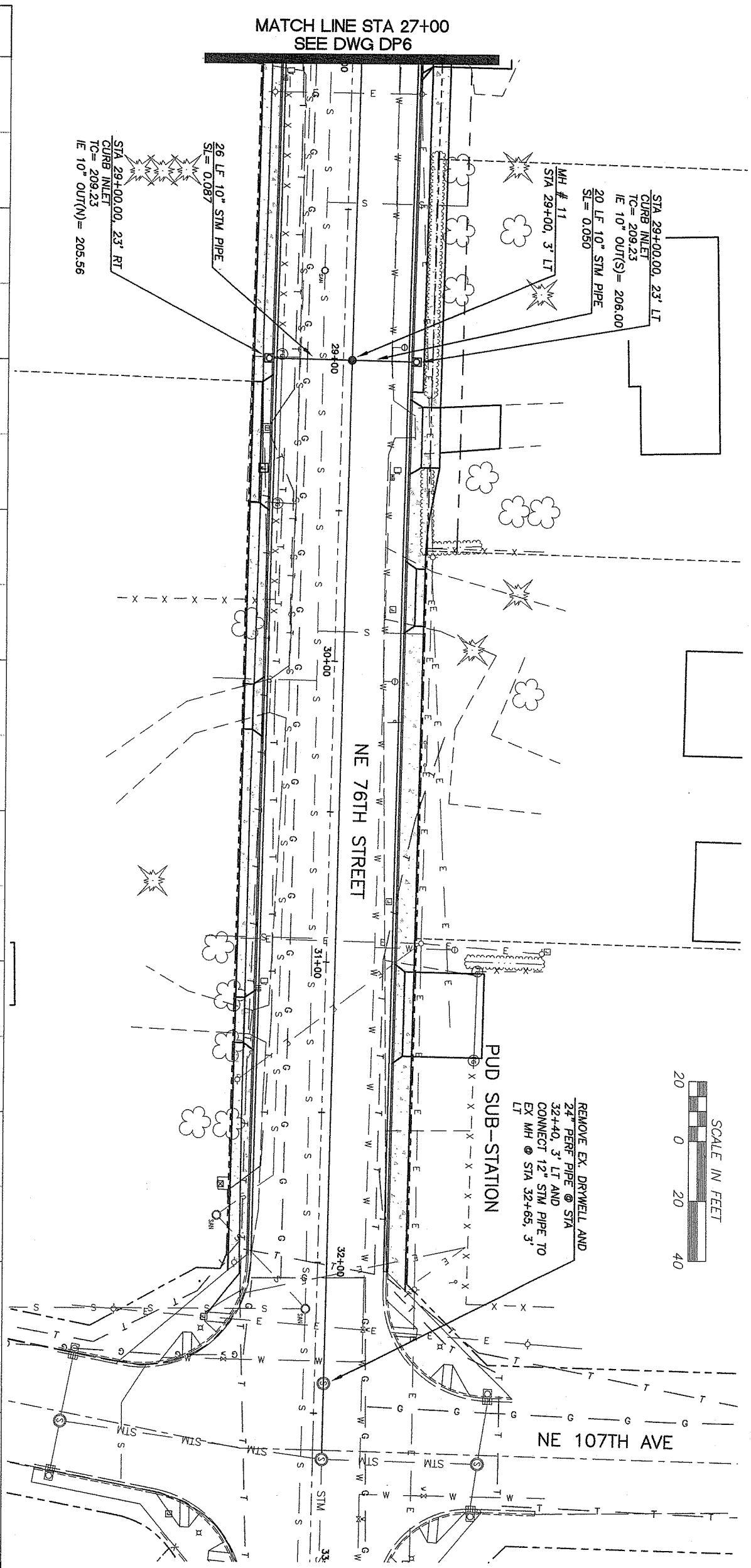

proud past, promising future

CLARK COUNTY
WASHINGTON

DESIGN & ENGINEERING DIVISION
DESIGN SECTION

NE 76TH STREET
DRAINAGE PLAN (28+00 TO E.O.P.)

DONALD J. MOE
STATE OF WASHINGTON
22994
REGISTERED
PROFESSIONAL ENGINEER
1-26-04
EXPIRES: JUNE 22, 2004

CALL 48 HOURS BEFORE YOU DIG
1-800-553-4344
"It's the Law"
NORTHWEST UTILITIES NOTIFICATION CENTER

DESIGNED	SLF
DRAWN	SLF/AF
CRP	#320922
HOR.	1"=20'
VERT.	1"=5'
DATE	01-23-04
DWG:	DP7
SHEET	31 OF 40

NOTE:
1. The striping and pavement marking removal process shall conform to 2002 WSDOT "Standard Specifications for Road, Bridge and Municipal Construction" section 8-22.3(6). The County's accepted practice of removal of existing painted pavement marking is by shot blasting. All other markings are removed by grinding. The contractor shall have a written approval by the engineer for any other method of removal.
2. The contractor shall maintain existing permanent signing in accordance with 2002 WSDOT "Standard Specifications for Road, Bridge and Municipal Construction" section 1-07.23(1).
3. For private development projects item 3 of WSDOT Standard Specifications 1-07.23(1) shall be modified to replace the term "contracting agency" with the term "contractor".
4. The contractor shall provide temporary pavement markings in accordance with 2002 WSDOT "Standard Specifications for Road, Bridge and Municipal Construction" section 8.23.
5. All new signing, striping and pavement markings, including relocation of existing signs to the final location, will be performed by Clark County Public Works and reimbursed by the applicant for the services rendered.

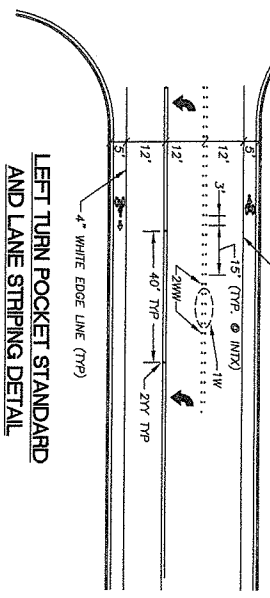

LEFT TURN POCKET STANDARD AND LANE STRIPING DETAIL
NTS

MATCH LINE STA 22+00

MATCH LINE STA 10+50

MATCH LINE STA 2+00- SHEET SS2

NOT IN CONTRACT

SCALE IN FEET 40 0 40 80

MATCH LINE STA 22+00

MATCH LINE STA 10+50

proud past, promising future
CLARK COUNTY
WASHINGTON

DESIGN & ENGINEERING DIVISION
DESIGN SECTION

NE 76TH STREET
SIGNING AND STRIPING PLAN
STA. 2+00–32+00

EJAZ KHAN
STATE OF WASHINGTON
35938
REGISTERED PROFESSIONAL ENGINEER
1/12/03
EXPIRES: JAN. 01, 2006

CALL 48 HOURS BEFORE YOU DIG
1-800-553-4344
"It's the Law"
NORTHWEST UTILITIES NOTIFICATION CENTER

DESIGNED	EK
DRAWN	EK
CRP	#320922
HOR.	1"=40'
VERT.	N/A
DATE	1/23/04
DWG:	SS1
SHEET 32	OF 40

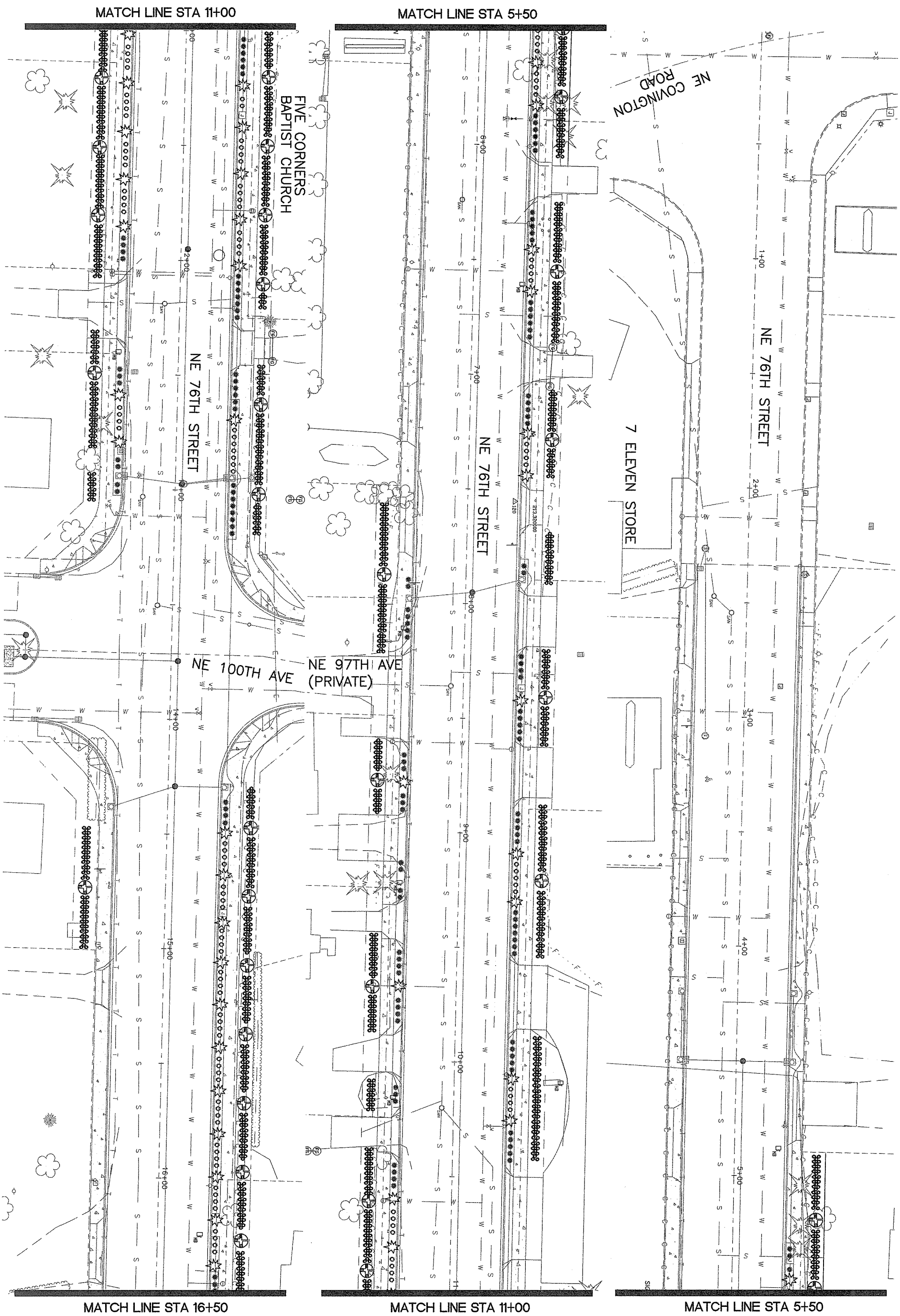

FOR INFORMATIONAL PURPOSES ONLY

proud past, promising future

CLARK COUNTY
WASHINGTON

DESIGN & ENGINEERING DIVISION
DESIGN SECTION

NE 76TH STREET
LANDSCAPING PLAN (4+50 TO 16+50)

DONALD J. MOE
STATE OF WASHINGTON
22994
REGISTERED
PROFESSIONAL ENGINEER
1-26-04
EXPIRES: JUNE 22, 2004

CALL 48 HOURS BEFORE YOU DIG
1-800-553-4344
"It's the Law"
NORTHWEST UTILITIES NOTIFICATION CENTER

DESIGNED	SLF/IP
DRAWN	IP
CRP	#320922
HOR.	1"=20'
VERT.	N/A
DATE	01-23-04
DWG:	LS1
SHEET 33	OF 40

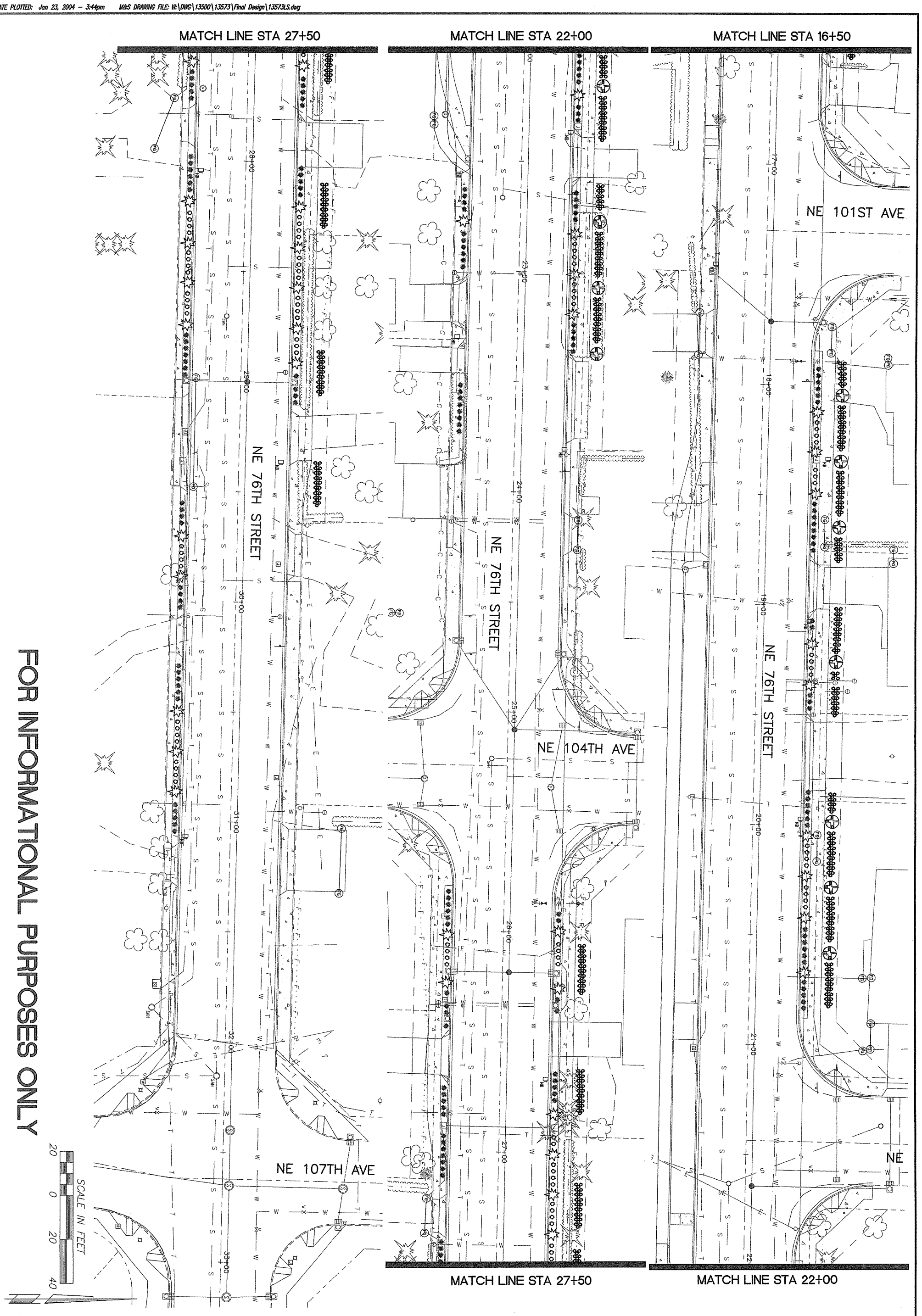

FOR INFORMATIONAL PURPOSES ONLY

proud past, promising future

CLARK COUNTY
WASHINGTON

DESIGN & ENGINEERING DIVISION
DESIGN SECTION

NE 76TH STREET
LANDSCAPING PLAN (16+50 TO E.O.P.)

RONALD J. MOYER
STATE OF WASHINGTON
22994
REGISTERED
PROFESSIONAL ENGINEER
1-26-04
EXPIRES: JUNE 22, 2004

CALL 48 HOURS BEFORE YOU DIG
1-800-553-4344
"It's the Law"
NORTHWEST UTILITIES NOTIFICATION CENTER

DESIGNED	SLF/IP
DRAWN	IP
CRP	#320922
HOR.	1"=20'
VERT.	N/A
DATE	01-23-04
DWG:	LS2
SHEET 34	OF 40

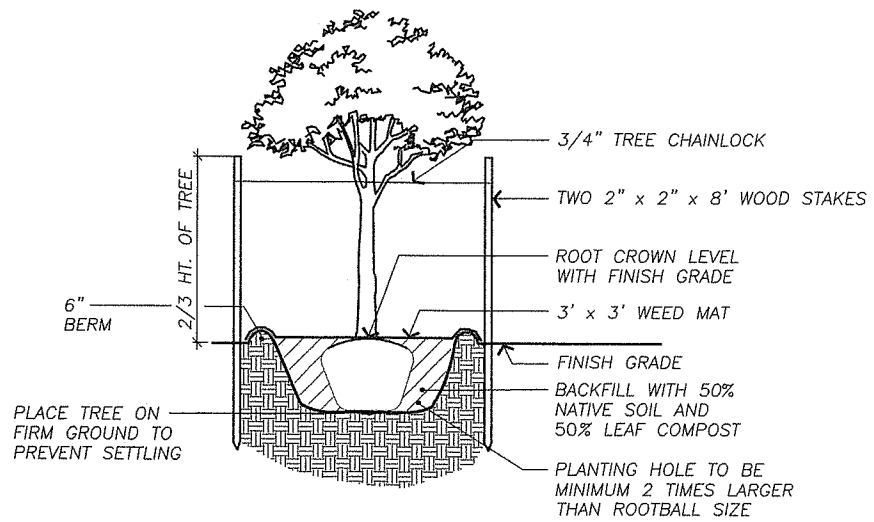

TREE PLANTING DETAIL

NOT TO SCALE

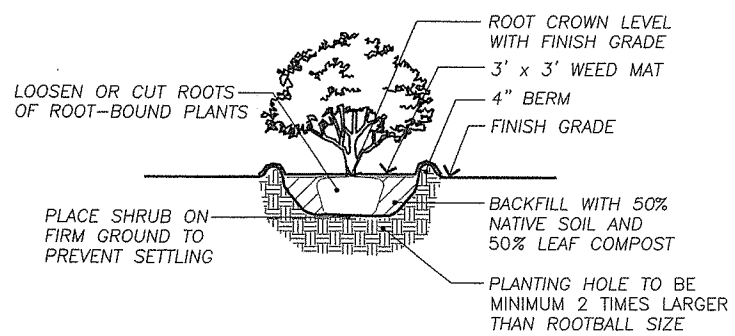

SHRUB PLANTING DETAIL

NOT TO SCALE

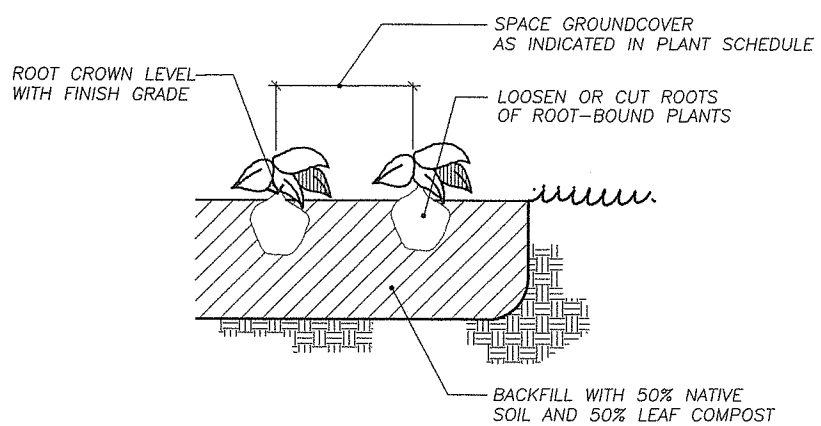

GROUNDCOVER PLANTING DETAIL

NOT TO SCALE

PLANT SCHEDULE

TYPE	BOTANICAL NAME/COMMON NAME	QUANTITY	SIZE	SPACING
TREES:	Acer plantanoides 'Crimson Sentry' / Crimson Sentry Norway Maple	41	1 3/4" Caliper	20' OC or as shown
SHRUBS:	Chamaecyparis obtusa 'Nana' / Dwarf Hinoki False Cypress	78	2 Gallon	20' OC or as shown
	Lavandula angustifolia / English Lavender	200	1 Gallon	36" OC or as shown
	Viburnum davidii / David Viburnum	93	2 Gallon	36" OC or as shown
GROUND COVER:	Vinca minor / Dwarf Periwinkle	2000	4" Pots	18" OC or as shown

PLANTING NOTES

1. CONTRACTOR SHALL VERIFY ALL QUANTITIES, MEASUREMENTS, AND SITE CONDITIONS.
2. PLANTING PERIOD IS FROM APPROXIMATELY OCTOBER 15 TO APRIL 15, WEATHER DEPENDENT.
3. CONTRACTOR SHALL VERIFY THE LOCATION OF ALL EXISTING UTILITIES.
4. INSTALLED PLANTS SHALL BE IMMEDIATELY WATERED IN BY CONTRACTOR.
5. ALL PLANT MATERIALS SHALL CONFORM IN SIZE AND GRADE TO THE "AMERICAN STANDARD FOR NURSERY STOCK", CURRENT EDITION.
6. PLANTS SHALL BE INSTALLED ACCORDING TO DETAILS SHOWN.
7. NO SUBSTITUTIONS IN PLANT VARIETIES SHALL BE MADE WITHOUT APPROVAL FROM CLARK COUNTY VEGETATION DEPARTMENT.
8. LANDSCAPE WORK SHALL BE REVIEWED AND APPROVED BY THE CLARK COUNTY VEGETATION DEPARTMENT. SOME FIELD ADJUSTMENTS MAY BE NECESSARY TO REFLECT ACTUAL GRADING AND SITE CONDITIONS.
9. FOLLOWING PLANTING, TREES SHALL BE STAKED ACCORDING TO DETAIL SHOWN.
10. AS PART OF THE PLANTING PROCEDURE, ONE HALF COMPOST SHALL BE MIXED WITH ONE HALF NATIVE SOIL. A 3" TO 4" BERM SHALL BE FORMED SURROUNDING THE PLANTING TO AID IN WATERING THE PLANTING.
11. FOLLOWING PLANT INSTALLATION AND PLACEMENT OF WEED MAT, 3" OF APPROVED BARK DUST SHALL BE SPREAD AROUND ALL PLANTINGS.
12. FOLLOWING COMPLETION OF LANDSCAPE PROJECT, SITE SHALL BE MAINTAINED WEEKLY. MAINTENANCE SHALL INCLUDE ADEQUATE WATERING OF ALL INSTALLED PLANTS TO ENSURE HEALTH AND SURVIVAL, REMOVING WEEDS FROM SITE, AND MONITOR TREE STAKES AND TIES TO ENSURE PROPER SUPPORT AND TO PREVENT TIES FROM GIRDLING TRUNKS. REMOVE TREE STAKES AND TIES AFTER ONE YEAR MINIMUM. STAKES AND TIES CAN REMAIN LONGER, IF NEEDED, BUT SHALL BE REMOVED ONCE ADEQUATE ANCHORING IS ATTAINED. BARKDUST SHALL BE REAPPLIED AS NEEDED.

FOR INFORMATIONAL PURPOSES ONLY

DESIGNED SLF
DRAWN IP
CRP #320922
HOR. N/A
VERT. N/A
DATE 01-23-04
DWG: LS3
SHEET 35 OF 40

CALL 48 HOURS BEFORE YOU DIG 1-800-553-4344 "It's the Law" NORTHWEST UTILITIES NOTIFICATION CENTER

STATE OF WASHINGTON DONALD J. ADE REGISTERED PROFESSIONAL ENGINEER 27359 1-28-04 EXPIRES: JUNE 22, 2004

DESIGN & ENGINEERING DIVISION
DESIGN SECTION

NE 76TH STREET
LANDSCAPING DETAILS

proud past, promising future
CLARK COUNTY WASHINGTON

DATE PLOTTED: Jan 23, 2004 - 3:45pm M&S DRAWING FILE: W:\DWG\13500\13573\Final Design\13573LS.dwg

THIS WORK ONLY TO BE DONE IF A TCP AGREEMENT IS MADE WITH CLARK COUNTY - DO NOT ENTER THIS PROPERTY UNLESS A TCP IS IN POSSESSIONS BY CLARK COUNTY

SCALE IN FEET
20 0 20 40

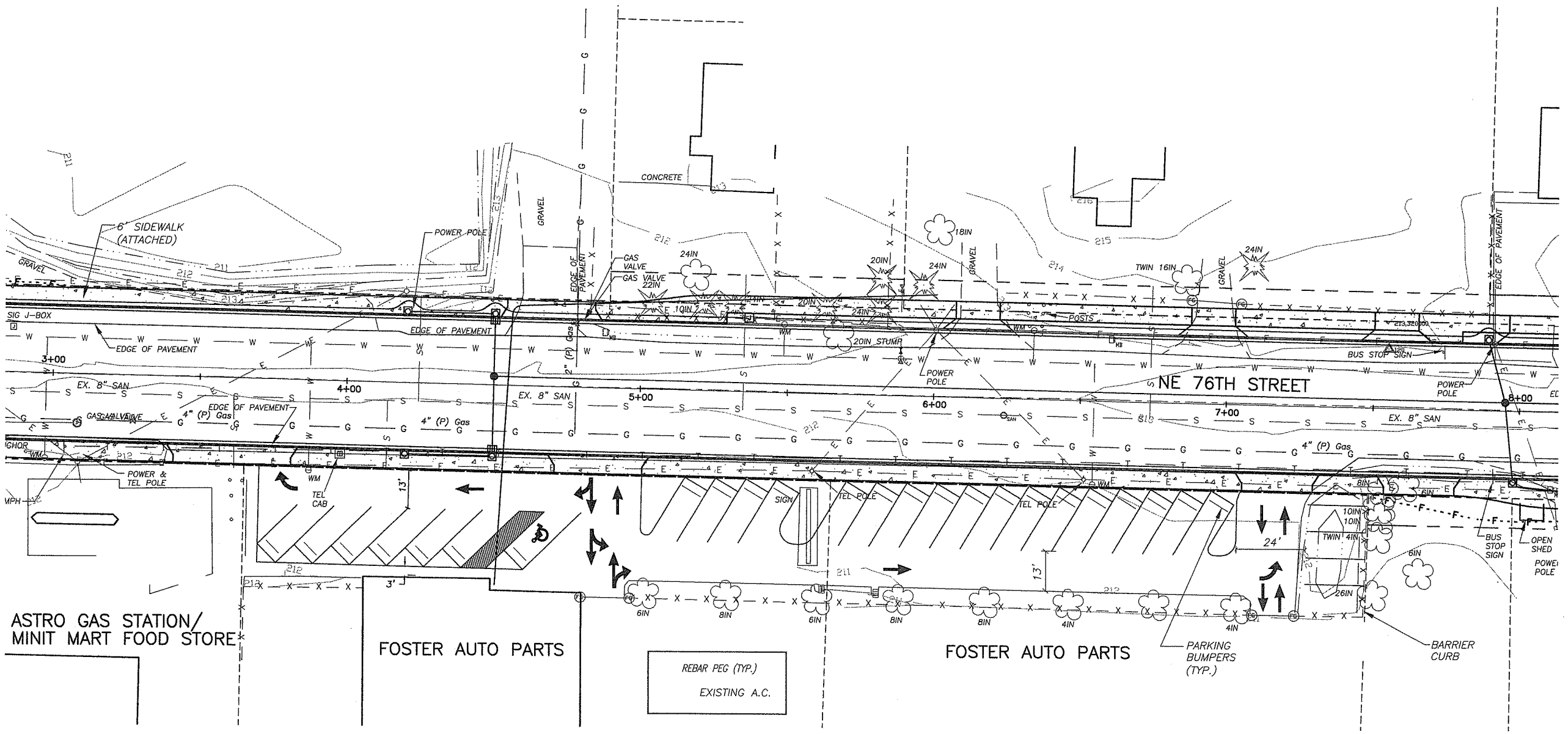

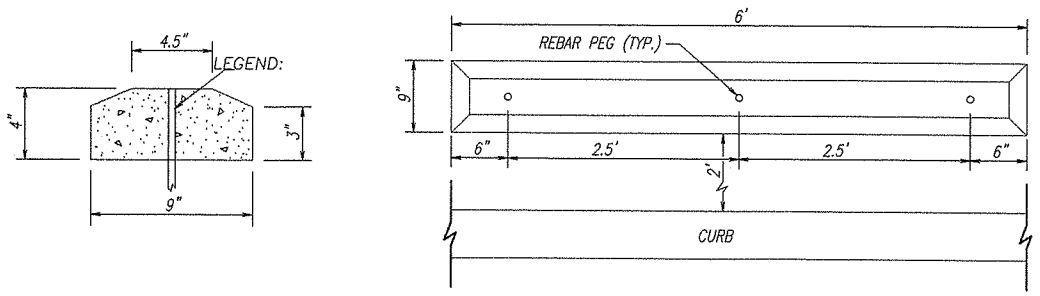

PARKING BLOCK DETAIL
NO SCALE

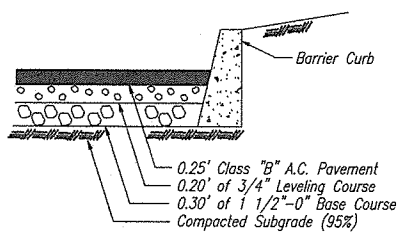

PARKING PAVEMENT SECTION
NO SCALE

DESIGNED SLF
DRAWN SLF/AF
CRP #320922
HOR. 1"=20'
VERT. N/A
DATE 01-23-04
DWG. UPP
SHEET 36 OF 40

CALL 48 HOURS BEFORE YOU DIG 1-800-553-4344 "It's the Law" NORTHWEST UTILITIES NOTIFICATION CENTER

EXPIRES: JUNE 23, 2004

DESIGN & ENGINEERING DIVISION
DESIGN SECTION

FOSTER AUTO PARTS
PARKING LOT

proud past, promising future
CLARK COUNTY WASHINGTON

DATE PLOTTED: Jan 23, 2004 - 3:46pm M&S DRAWING FILE: W:\DWG\13500\13573\Final Design\13573_U-PULL-IT-PARKING.dwg

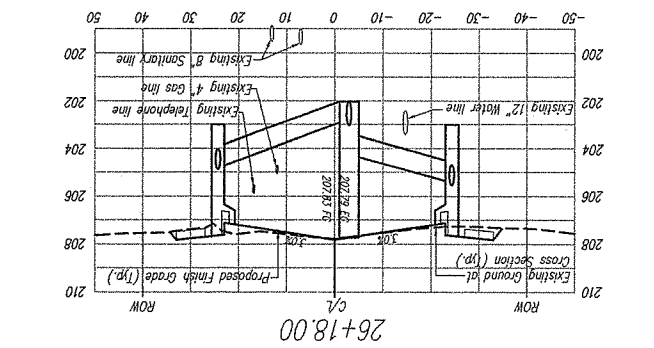

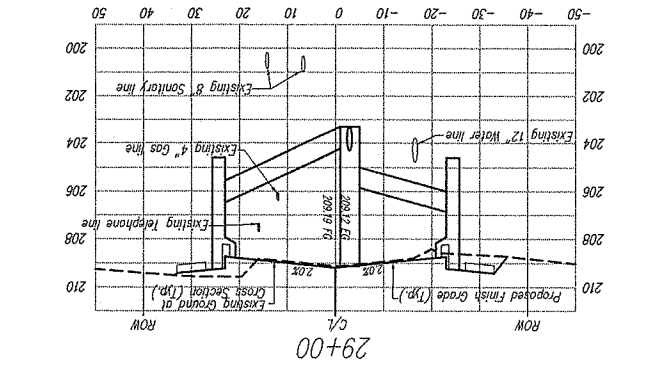

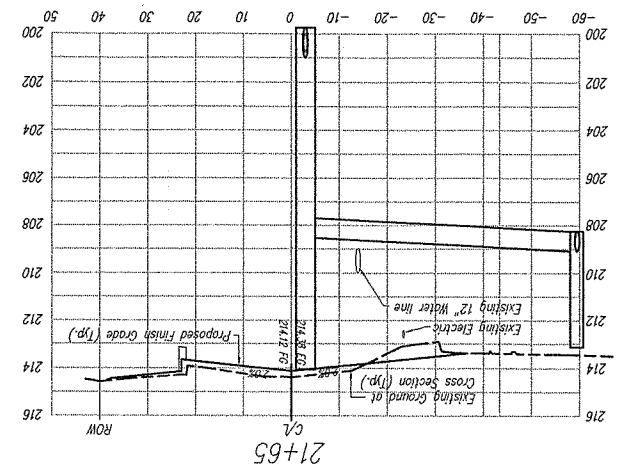

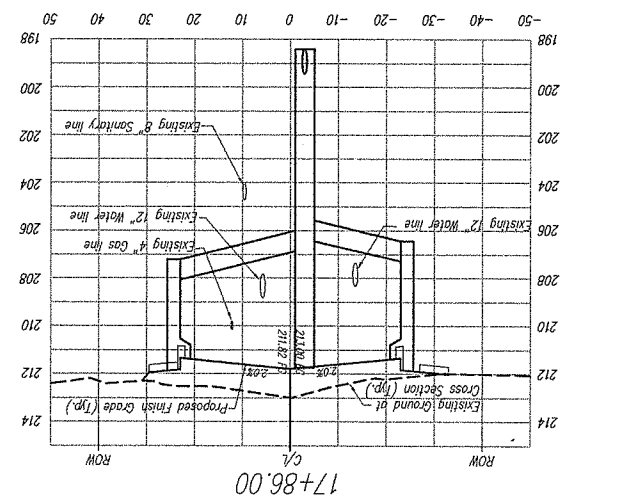

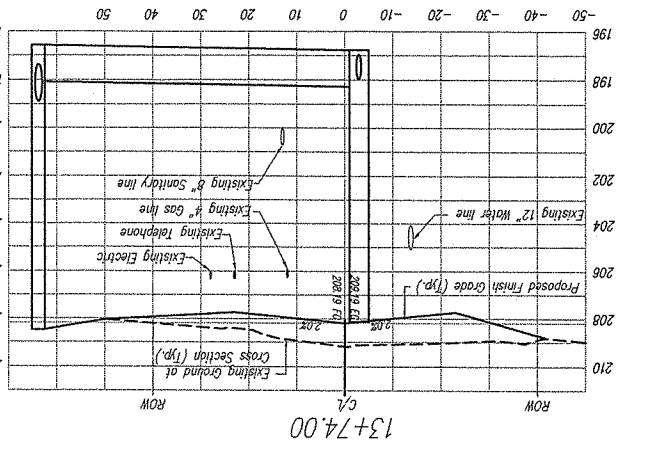

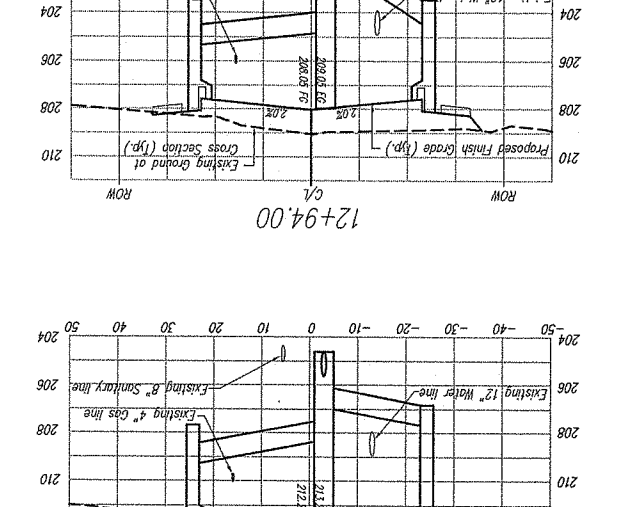

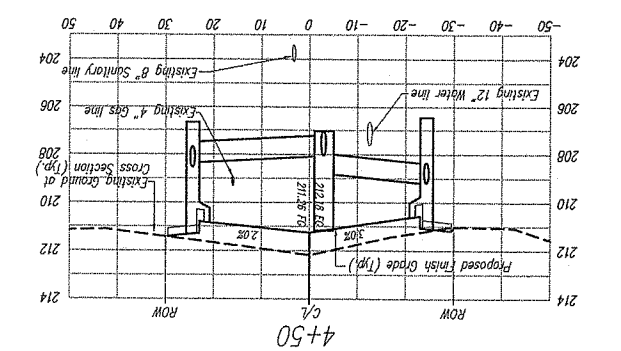

NOTE:
THE LOCATIONS, BOTH VERTICAL AND HORIZONTALLY, OF THE EXISTING UTILITIES ARE APPROXIMATE. THE CONTRACTOR SHALL USE EXTREME CAUTION TO ENSURE THE EXISTING UTILITIES ARE NOT DISTURBED.

CLARK COUNTY
WASHINGTON
proud past, promising future

DESIGN & ENGINEERING DIVISION
DESIGN SECTION

NE 76TH STREET
STORM LATERAL CROSS SECTIONS

DONALD J. WAGNER
STATE OF WASHINGTON
22394
REGISTERED PROFESSIONAL ENGINEER
EXPIRES JUNE 22, 2004

CALL 48 HOURS BEFORE YOU DIG
1-800-553-4344
"It's the Law"
NORTHWEST NOTIFICATION CENTER

DESIGNED	SLF
DRAWN	BY/IP
CRP	#320922
HOR.	1"=20'
VERT.	1"=4'
DATE	01-23-04
DWG:	STMS1
SHEET 37	OF 40

DATE PLOTTED: Jan 23, 2004 - 3:47pm MBS DRAWING FILE: W:\DWG\13500\13573\Final Design\13573_StmLat_CrossSection.dwg

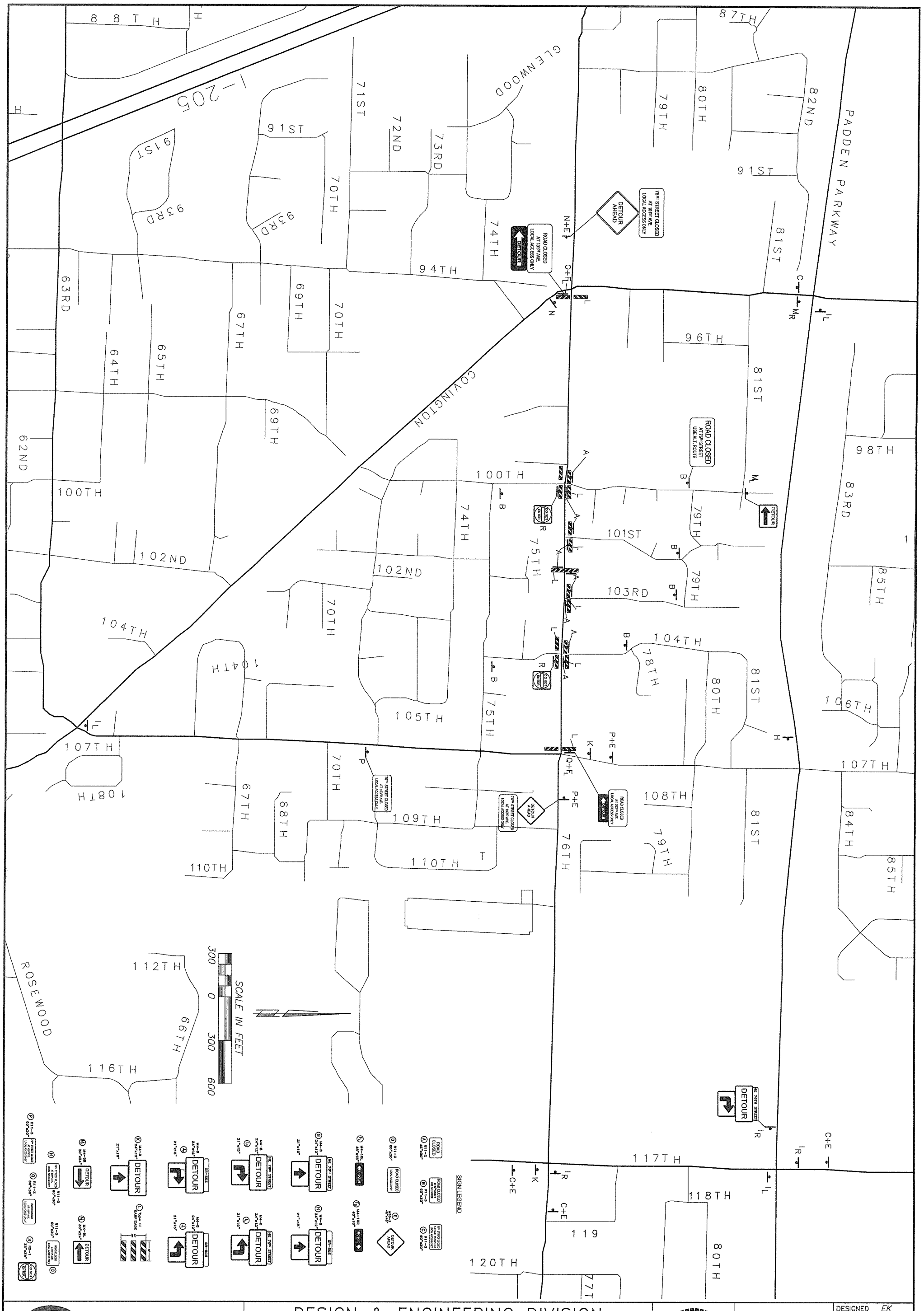

proud past, promising future

CLARK COUNTY
WASHINGTON

DESIGN & ENGINEERING DIVISION
DESIGN SECTION

NE 76TH STREET PROJECT DETOUR PLAN
NE COVINGTON ROAD TO NE 107TH AVENUE

EJAZ KHAN
STATE OF WASHINGTON
35938
REGISTERED PROFESSIONAL ENGINEER
EXPIRES: JAN. 01, 2006

CALL 48 HOURS BEFORE YOU DIG
1-800-553-4344
"It's the Law"
NORTHWEST UTILITIES NOTIFICATION CENTER

DESIGNED	EK
DRAWN	KB
CRP	320922
HOR.	NA
VERT.	NA
DATE	1/23/04
DWG:	76STDETOUR
SHEET	38 OF 40

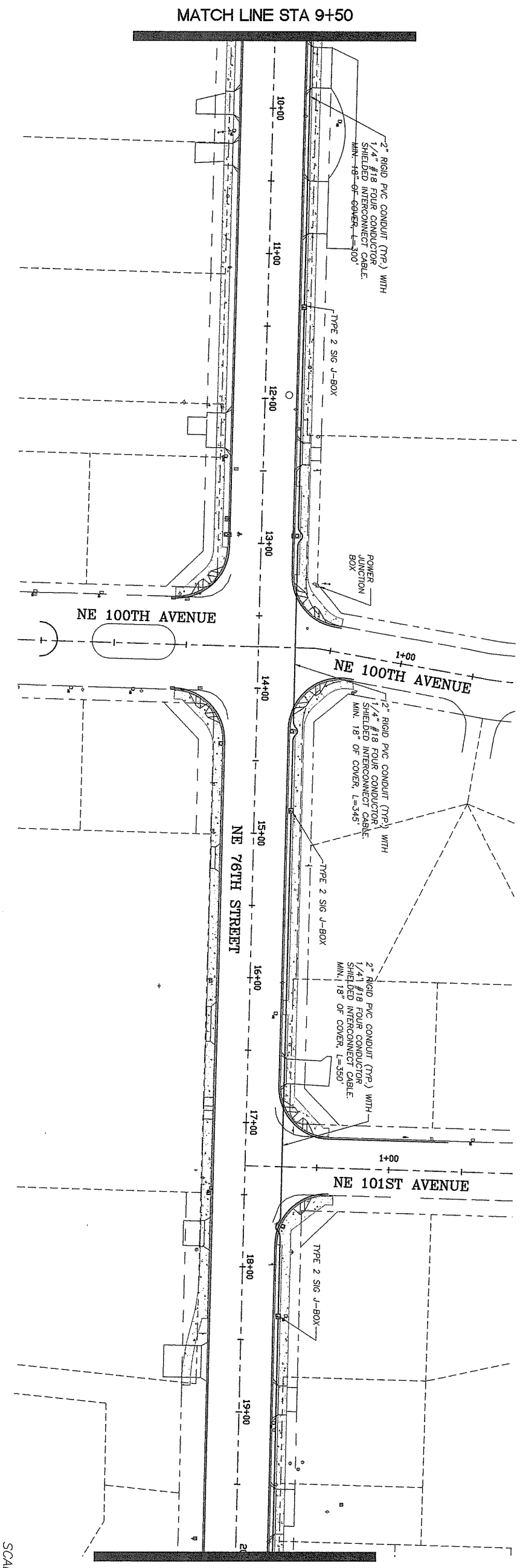

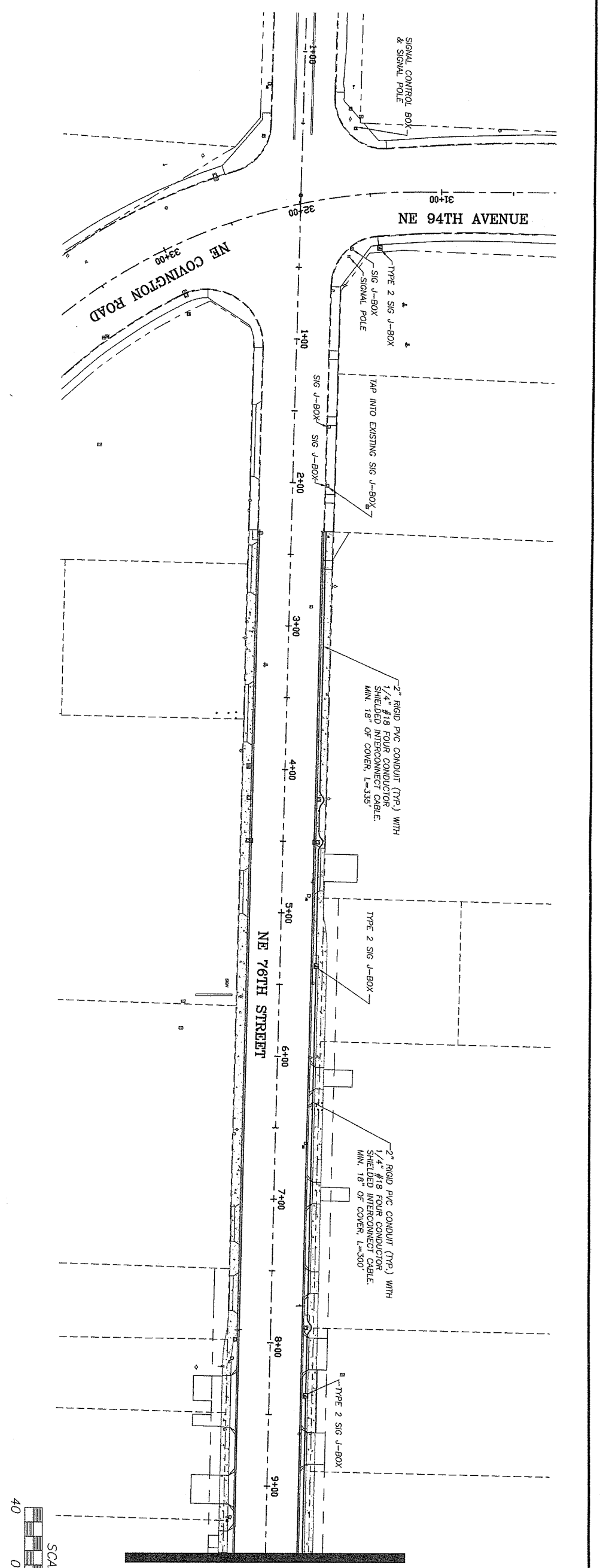

proud past, promising future
CLARK COUNTY
WASHINGTON

DESIGN & ENGINEERING DIVISION
DESIGN SECTION

NE 76TH STREET
TRAFFIC SIGNAL INTERCONNECT (B.O.P. TO 20+00)

DONALD J. MOE
STATE OF WASHINGTON
22994
REGISTERED PROFESSIONAL ENGINEER
1-26-04
EXPIRES: JUNE 22, 2004

CALL 48 HOURS BEFORE YOU DIG
1-800-553-4344
"It's the Law"
NORTHWEST UTILITIES NOTIFICATION CENTER

DESIGNED	SLF
DRAWN	SLF/IP
CRP	#320922
HOR.	1"=40'
VERT.	N/A
DATE	01-23-04
DWG:	SIGINT1
SHEET 39	OF 40

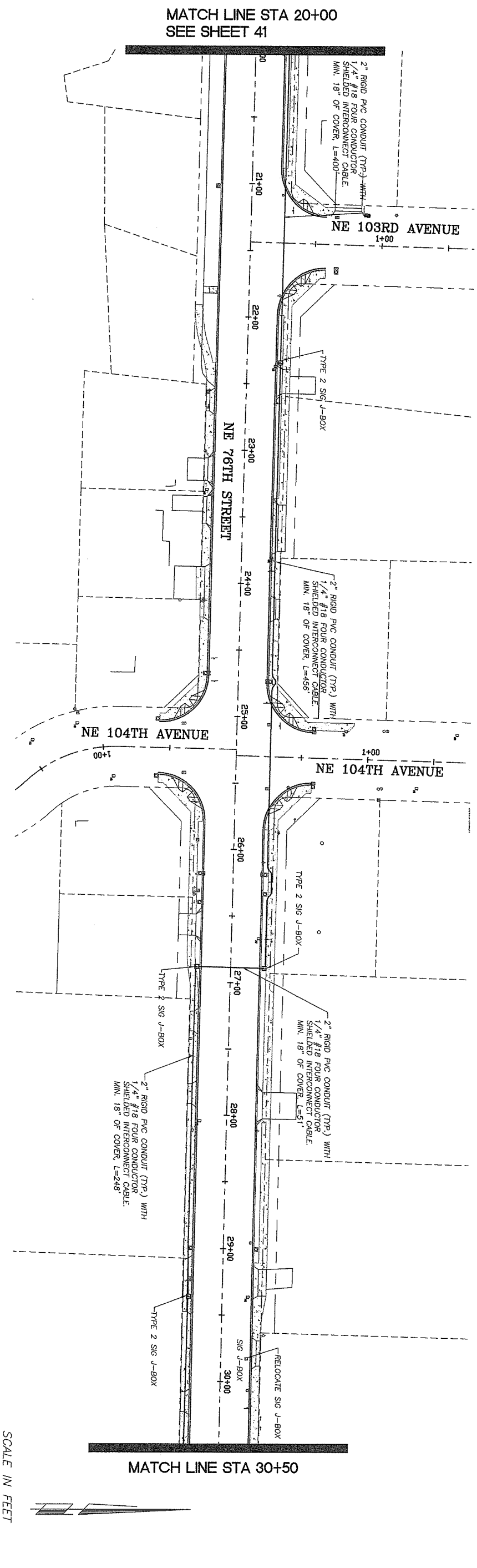

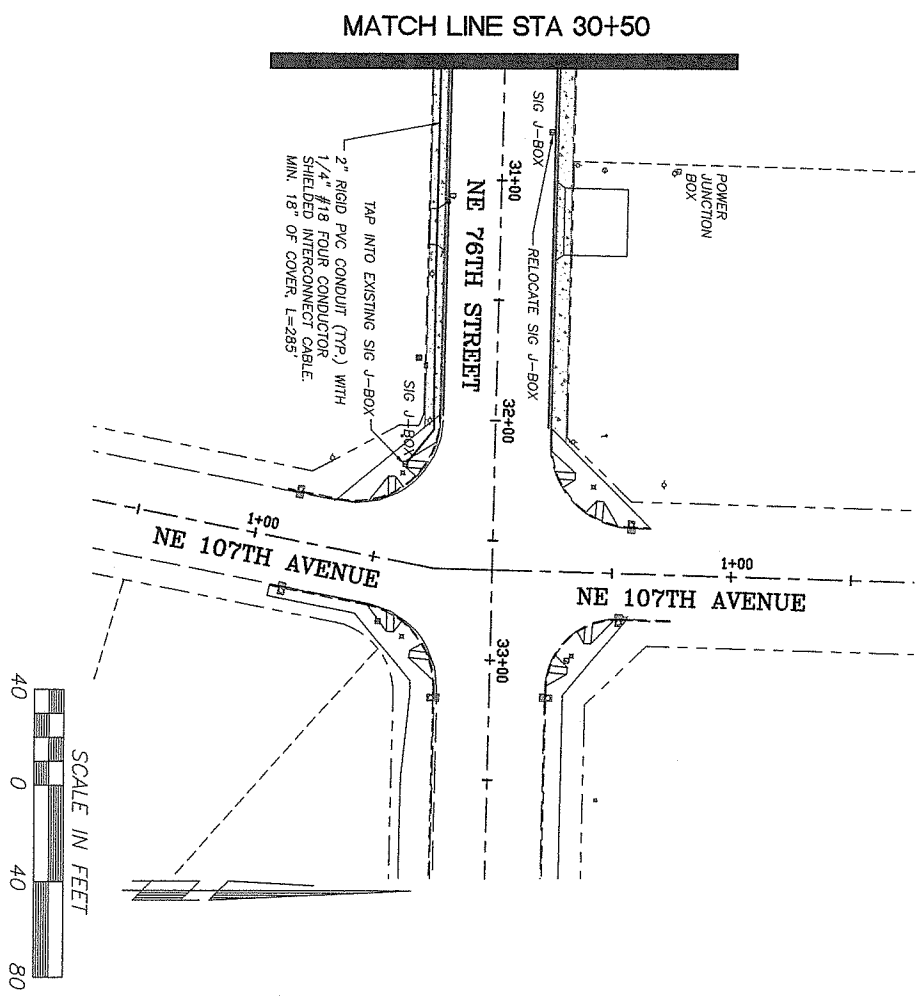

proud past, promising future

CLARK COUNTY
WASHINGTON

DESIGN & ENGINEERING DIVISION
DESIGN SECTION

NE 76TH STREET
TRAFFIC SIGNAL INTERCONNECT (20+00 TO E.O.P.)

DONALD J. MOE
STATE OF WASHINGTON
22994
REGISTERED
PROFESSIONAL ENGINEER
1-26-04
EXPIRES: JUNE 22, 2004

CALL 48 HOURS BEFORE YOU DIG
1-800-553-4344
"It's the Law"
NORTHWEST UTILITIES NOTIFICATION CENTER

DESIGNED	SLF
DRAWN	SLF/IP
CRP	#320922
HOR.	1"=40'
VERT.	N/A
DATE	01-23-04
DWG:	SIGINT2
SHEET 40	OF 40

LEGEND

- Type III signal standard with terminal cabinet
- controller cabinet with Type I electrical service
- Type I electrical junction box
- Type II electrical junction box
- conventional traffic signal display
- Optically programmed traffic signal display
- pedestrian signal display
- optical pre-emption detector
- rigid metal conduit
- rigid polyvinyl chloride (PVC) conduit
- existing right-of-way
- newly acquired right-of-way
- walk way construction
- signal standard number
- construction note
- wire note (New or modified)
- wire note (Existing)
- Wire run (New or modified)
- Wire note (Existing)

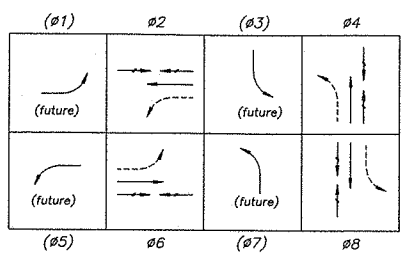

EXISTING PHASE SEQUENCE DIAGRAM

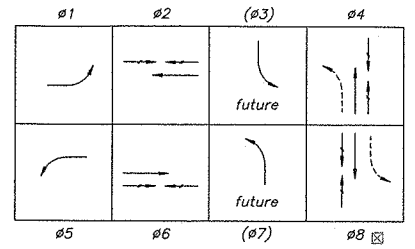

REVISED PHASE SEQUENCE DIAGRAM

SIGNAL HEAD DISPLAYS

HEADS 21, 22, 41, 42, 61, 62, 81, and 82 — HEADS 11, 51 — HEADS 28, 29, 48, 49, 68, 69, 88, and 89

NOTES:

1. Traffic signal heads shall have 12" sections, square doors, backplates, Type LE mounts, backplates, and tunnel visors. The length of the 1-1/2" conduit section(s) on the Type LE traffic signal head mounts shall be of a length which will result in a mounting height having a clearance of 18'-6" (±6") between the road surface and the bottom section of the traffic signal head.
2. All sections of heads 11 & 51 shall be optically programmed. All other signal heads are existing.

PWR. SUPPLY	VEHICLE	VEHICLE	VEHICLE	VEHICLE	PRE-EMPT.
MODULE 2	(11)	21	(22)	spare	NORTH BOUND CHANNEL A
MODULE 3	(12)	64	(23)	spare	
MODULE 4	(51)	61	(62)	spare	SOUTH BOUND CHANNEL B
MODULE 5	(52)	(24)	(63)	spare	

DETECTION RACK A

MODULE NO. / MODULE TYPE / CHANNEL: 1, 2, 3, 4

PWR. SUPPLY	VEHICLE	VEHICLE	VEHICLE	VEHICLE	PRE-EMPT.
MODULE 2	(31)	41	(42)	spare	EAST BOUND CHANNEL A
MODULE 3	(32)	44	(43)	spare	
MODULE 4	(71)	81	(82)	spare	WEST BOUND CHANNEL B
MODULE 5	(72)	84	(83)	spare	

DETECTION RACK B

EXISTING DETECTION RACKS

common home-run cable (4cc/s)
(xx) = future detection sensor

PWR. SUPPLY	VEHICLE	VEHICLE	VEHICLE	VEHICLE	PRE-EMPT.
MODULE 2	11	12	22	24	NORTH BOUND CHANNEL A
MODULE 3	spare	64	23	52	
MODULE 4	51	61	62	21	SOUTH BOUND CHANNEL B
MODULE 5	spare	spare	(63)	22	

DETECTION RACK A

MODULE NO. / MODULE TYPE / CHANNEL: 1, 2, 3, 4

PWR. SUPPLY	VEHICLE	VEHICLE	VEHICLE	VEHICLE	PRE-EMPT.
MODULE 2	(31)	(41A&B)	(42)	spare	EAST BOUND CHANNEL A
MODULE 3	(32)	(44A&B)	(43)	spare	
MODULE 4	(71)	81	(82)	spare	WEST BOUND CHANNEL B
MODULE 5	(72)	84	(83)	spare	

DETECTION RACK B

REVISED DETECTION RACKS

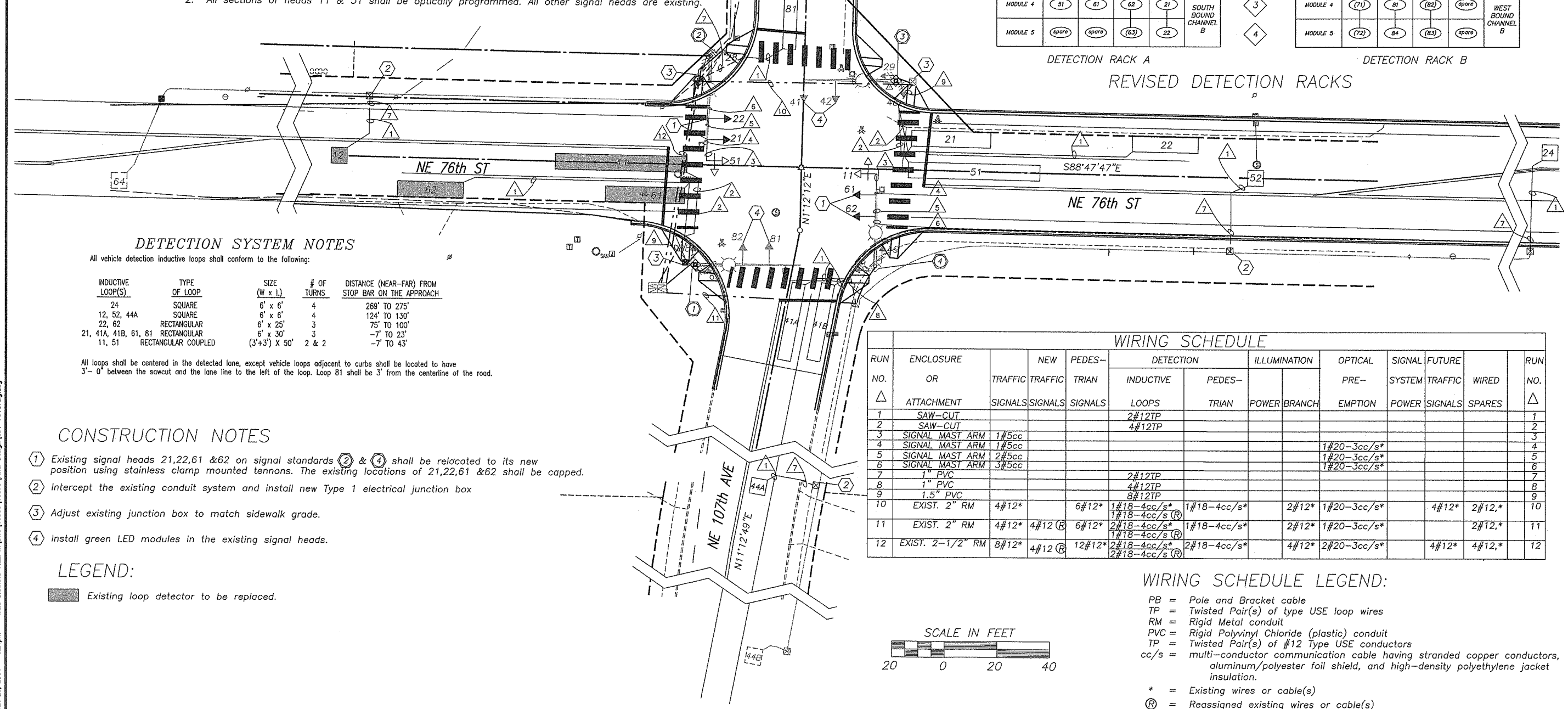

DETECTION SYSTEM NOTES

All vehicle detection inductive loops shall conform to the following:

INDUCTIVE LOOP(S)	TYPE OF LOOP	SIZE (W x L)	# OF TURNS	DISTANCE (NEAR-FAR) FROM STOP BAR ON THE APPROACH
24	SQUARE	6' x 6'	4	269' TO 275'
12, 52, 44A	SQUARE	6' x 6'	4	124' TO 130'
22, 62	RECTANGULAR	6' x 25'	3	75' TO 100'
21, 41A, 41B, 61, 81	RECTANGULAR	6' x 30'	3	-7' TO 23'
11, 51	RECTANGULAR COUPLED	(3'+3') X 50'	2 & 2	-7' TO 43'

All loops shall be centered in the detected lane, except vehicle loops adjacent to curbs shall be located to have 3'- 0" between the sawcut and the lane line to the left of the loop. Loop 81 shall be 3' from the centerline of the road.

CONSTRUCTION NOTES

1. Existing signal heads 21,22,61 &62 on signal standards 2 & 4 shall be relocated to its new position using stainless clamp mounted tennons. The existing locations of 21,22,61 &62 shall be capped.
2. Intercept the existing conduit system and install new Type 1 electrical junction box
3. Adjust existing junction box to match sidewalk grade.
4. Install green LED modules in the existing signal heads.

LEGEND:

Existing loop detector to be replaced.

WIRING SCHEDULE

RUN NO. △	ENCLOSURE OR ATTACHMENT	TRAFFIC SIGNALS	NEW TRAFFIC SIGNALS	PEDES-TRIAN SIGNALS	DETECTION: INDUCTIVE LOOPS	DETECTION: PEDES-TRIAN	ILLUMINATION: POWER	ILLUMINATION: BRANCH	OPTICAL PRE-EMPTION	SIGNAL SYSTEM POWER	FUTURE TRAFFIC SIGNALS	WIRED SPARES	RUN NO. △
1	SAW-CUT				2#12TP								1
2	SAW-CUT				4#12TP								2
3	SIGNAL MAST ARM	1#5cc											3
4	SIGNAL MAST ARM	1#5cc							1#20-3cc/s*				4
5	SIGNAL MAST ARM	2#5cc							1#20-3cc/s*				5
6	SIGNAL MAST ARM	3#5cc							1#20-3cc/s*				6
7	1" PVC				2#12TP								7
8	1" PVC				4#12TP								8
9	1.5" PVC				8#12TP								9
10	EXIST. 2" RM	4#12*		6#12*	1#18-4cc/s* 1#18-4cc/s Ⓡ	1#18-4cc/s*		2#12*	1#20-3cc/s*		4#12*	2#12,*	10
11	EXIST. 2" RM	4#12*	4#12 Ⓡ	6#12*	2#18-4cc/s* 1#18-4cc/s Ⓡ	1#18-4cc/s*		2#12*	1#20-3cc/s*			2#12,*	11
12	EXIST. 2-1/2" RM	8#12*	4#12 Ⓡ	12#12*	2#18-4cc/s* 2#18-4cc/s Ⓡ	2#18-4cc/s*		4#12*	2#20-3cc/s*		4#12*	4#12,*	12

WIRING SCHEDULE LEGEND:

PB = Pole and Bracket cable
TP = Twisted Pair(s) of type USE loop wires
RM = Rigid Metal conduit
PVC = Rigid Polyvinyl Chloride (plastic) conduit
TP = Twisted Pair(s) of #12 Type USE conductors
cc/s = multi-conductor communication cable having stranded copper conductors, aluminum/polyester foil shield, and high-density polyethylene jacket insulation.
* = Existing wires or cable(s)
Ⓡ = Reassigned existing wires or cable(s)

DESIGNED	EK
DRAWN	KB
CRP	320922
HOR.	1"=20'
VERT.	NA
DATE	2/8/02
DWG:	SS1
SHEET 23	OF 35

CALL 48 HOURS BEFORE YOU DIG 1-800-553-4344 "It's the Law" NORTHWEST UTILITIES NOTIFICATION CENTER

DESIGN & ENGINEERING DIVISION
DESIGN SECTION

N.E. 76th STREET at N.E. 107th AVENUE
SIGNAL PLAN

STATE OF WASHINGTON — KEVIN J. KEARNS — REGISTERED PROFESSIONAL ENGINEER — EXPIRES JAN. 01, 2004

CLARK COUNTY WASHINGTON

Jan 23, 2004 - 4:21pm M&S DRAWING FILE: W:\DWG\13500\13573\Final Design\SS1-76107sig.dwg

LEGEND

- Type III signal standard with terminal cabinet
- controller cabinet with Type I electrical service
- Type I electrical junction box
- Type II electrical junction box
- conventional traffic signal display sections
- pedestrian signal display
- optical pre-emption detector
- rigid metal conduit
- rigid polyvinyl chloride (PVC) conduit
- existing right-of-way
- newly acquired right-of-way
- walk way construction
- signal standard number
- construction note
- wire note

T.2N., R.2E., W.M.

N.I.C.

SIGNAL HEAD DISPLAYS

HEADS 21, 22, 41, 42, 61, 62, 81, and 82

HEADS 28, 29, 48, 49, 68, 69, 88, and 89

NOTES:

1. Traffic signal heads shall have 12" sections, square doors, backplates, Type LE mounts, backplates, and tunnel visors. The length of the 1-1/2" conduit section(s) on the Type LE traffic signal head mounts shall be of a length which will result in a mounting height having a clearance of 18'-6" (±6") between the road surface and the bottom section of the traffic signal head.

2. Pedestrian signal heads are 16"(H) x 19-1/2"(W) x 10-1/2"(D) fiberoptic type with Type A mounts, tunnel visors and a shelf between DONT and WALK.

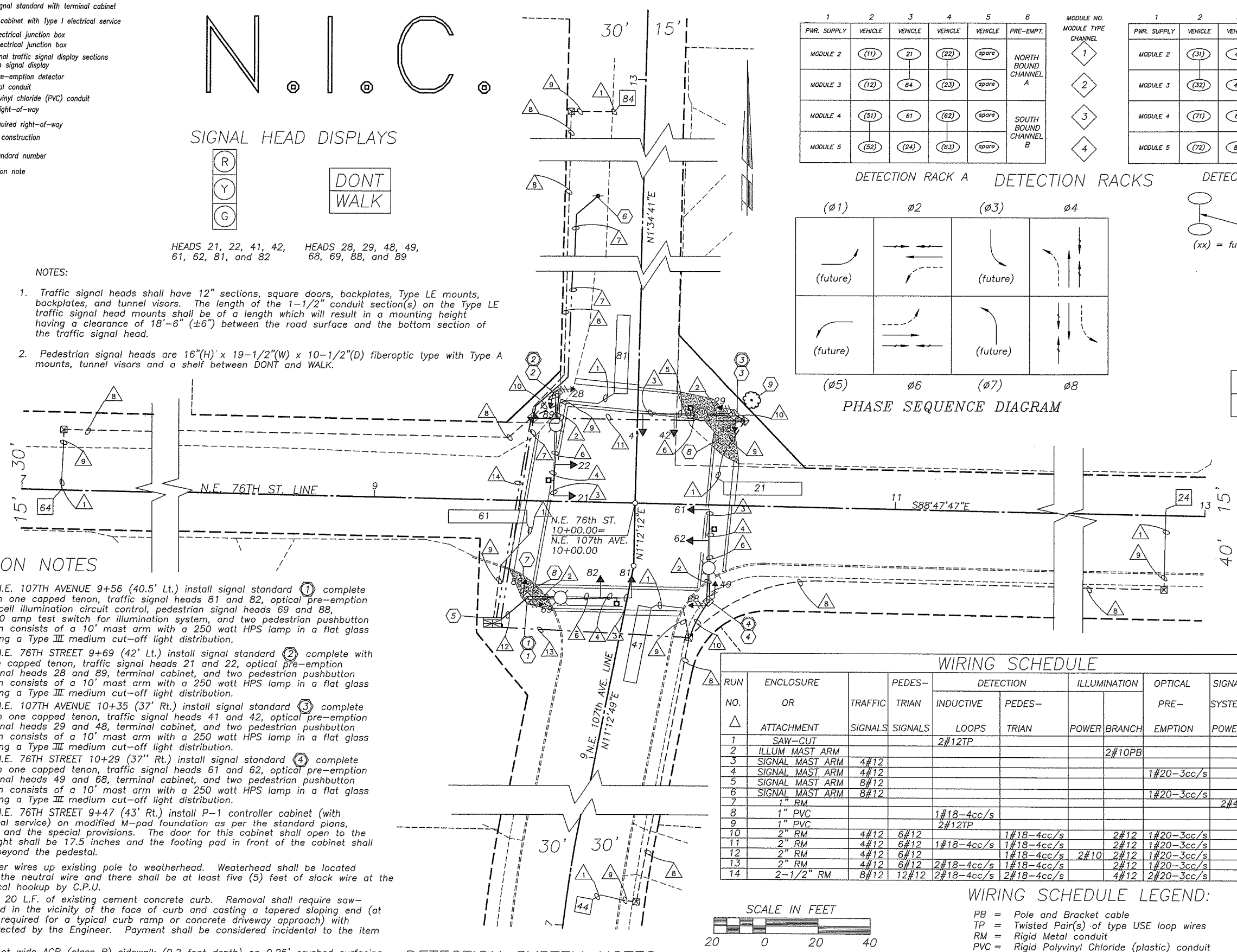

PWR. SUPPLY	VEHICLE	VEHICLE	VEHICLE	VEHICLE	PRE-EMPT.
MODULE 2	(11)	21	(22)	spare	NORTH BOUND CHANNEL A
MODULE 3	(12)	64	(23)	spare	
MODULE 4	(51)	61	(62)	spare	SOUTH BOUND CHANNEL B
MODULE 5	(52)	(24)	(63)	spare	

DETECTION RACK A

MODULE NO. / MODULE TYPE / CHANNEL: 1, 2, 3, 4

PWR. SUPPLY	VEHICLE	VEHICLE	VEHICLE	VEHICLE	PRE-EMPT.
MODULE 2	(31)	41	(42)	spare	EAST BOUND CHANNEL A
MODULE 3	(32)	44	(43)	spare	
MODULE 4	(71)	81	(82)	spare	WEST BOUND CHANNEL B
MODULE 5	(72)	84	(83)	spare	

DETECTION RACK B

DETECTION RACKS

PHASE SEQUENCE DIAGRAM

common home-run cable (4cc/s)
(xx) = future detection sensor

Fed Aid No.
Hes-4392(008)

CONSTRUCTION NOTES

1. At approximate Sta. N.E. 107TH AVENUE 9+56 (40.5' Lt.) install signal standard (1) complete with 40' mast arm with one capped tenon, traffic signal heads 81 and 82, optical pre-emption detector, photoelectric cell illumination circuit control, pedestrian signal heads 69 and 88, terminal cabinet with 30 amp test switch for illumination system, and two pedestrian pushbutton assemblies. Illumination consists of a 10' mast arm with a 250 watt HPS lamp in a flat glass refractor luminaire having a Type III medium cut-off light distribution.
2. At approximate Sta. N.E. 76TH STREET 9+69 (42' Lt.) install signal standard (2) complete with 40' mast arm with one capped tenon, traffic signal heads 21 and 22, optical pre-emption detector, pedestrian signal heads 28 and 89, terminal cabinet, and two pedestrian pushbutton assemblies. Illumination consists of a 10' mast arm with a 250 watt HPS lamp in a flat glass refractor luminaire having a Type III medium cut-off light distribution.
3. At approximate Sta. N.E. 107TH AVENUE 10+35 (37' Rt.) install signal standard (3) complete with 35' mast arm with one capped tenon, traffic signal heads 41 and 42, optical pre-emption detector, pedestrian signal heads 29 and 48, terminal cabinet, and two pedestrian pushbutton assemblies. Illumination consists of a 10' mast arm with a 250 watt HPS lamp in a flat glass refractor luminaire having a Type III medium cut-off light distribution.
4. At approximate Sta. N.E. 76TH STREET 10+29 (37'' Rt.) install signal standard (4) complete with 35' mast arm with one capped tenon, traffic signal heads 61 and 62, optical pre-emption detector, pedestrian signal heads 49 and 68, terminal cabinet, and two pedestrian pushbutton assemblies. Illumination consists of a 10' mast arm with a 250 watt HPS lamp in a flat glass refractor luminaire having a Type III medium cut-off light distribution.
5. At approximate Sta. N.E. 76TH STREET 9+47 (43' Rt.) install P-1 controller cabinet (with attached Type I electrical service) on modified M-pad foundation as per the standard plans, standard specifications, and the special provisions. The door for this cabinet shall open to the north, the pedestal height shall be 17.5 inches and the footing pad in front of the cabinet shall extend three (3) feet beyond the pedestal.
6. Run conduit and feeder wires up existing pole to weatherhead. Weaterhead shall be located within one (1) foot of the neutral wire and there shall be at least five (5) feet of slack wire at the weatherhead for electrical hookup by C.P.U.
7. Remove approximately 20 L.F. of existing cement concrete curb. Removal shall require saw-cutting the existing road in the vicinity of the face of curb and casting a tapered sloping end (at least 30" in length as required for a typical curb ramp or concrete driveway approach) with cement concrete as directed by the Engineer. Payment shall be considered incidental to the item "Traffic Signal System".
8. Construct eight (8) foot wide ACP (class B) sidewalk (0.2 foot depth) on 0.25' crushed surfacing top course between traffic signal pole and existing edge of asphalt as shown on this plan and as directed by the Engineer. Total paving required is approximately 45 S.Y. and payment shall be considered incidental to the item "Traffic Signal System".
9. Remove existing 24" (estimated base diameter) oak tree and roots. Restore ground to original conditions. Payment shall be considered incidental to the item "Traffic Signal System".

WIRING SCHEDULE

RUN NO. △	ENCLOSURE OR ATTACHMENT	TRAFFIC SIGNALS	PEDES-TRIAN SIGNALS	DETECTION INDUCTIVE LOOPS	DETECTION PEDES-TRIAN	ILLUMINATION POWER	ILLUMINATION BRANCH	OPTICAL PRE-EMPTION	SIGNAL SYSTEM POWER	FUTURE TRAFFIC SIGNALS	WIRED SPARES	RUN NO. △
1	SAW-CUT			2#12TP								1
2	ILLUM MAST ARM						2#10PB					2
3	SIGNAL MAST ARM	4#12										3
4	SIGNAL MAST ARM	4#12						1#20-3cc/s				4
5	SIGNAL MAST ARM	8#12										5
6	SIGNAL MAST ARM	8#12						1#20-3cc/s				6
7	1" RM								2#4			7
8	1" PVC			1#18-4cc/s								8
9	1" PVC			2#12TP								9
10	2" RM	4#12	6#12		1#18-4cc/s		2#12	1#20-3cc/s		4#12	2#12	10
11	2" RM	4#12	6#12	1#18-4cc/s	1#18-4cc/s		2#12	1#20-3cc/s		4#12	2#12, 1#18-4cc/s	11
12	2" RM	4#12	6#12		1#18-4cc/s	2#10	2#12	1#20-3cc/s		4#12	2#12	12
13	2" RM	4#12	6#12	2#18-4cc/s	1#18-4cc/s		2#12	1#20-3cc/s		4#12	2#12, 1#18-4cc/s	13
14	2-1/2" RM	8#12	12#12	2#18-4cc/s	2#18-4cc/s		4#12	2#20-3cc/s		8#12	4#12, 2#18-4cc/s	14

WIRING SCHEDULE LEGEND:

PB = Pole and Bracket cable
TP = Twisted Pair(s) of type USE loop wires
RM = Rigid Metal conduit
PVC = Rigid Polyvinyl Chloride (plastic) conduit
TP = Twisted Pair(s) of #12 Type USE conductors
cc/s = multi-conductor communication cable having stranded copper conductors, aluminum/polyester foil shield, and high-density polyethylene jacket insulation.

DETECTION SYSTEM NOTES

All vehicle detection inductive loops are four turn, 6'x 30' rectangular loops located at the stop bar or 6'x 6' octagonal (Type II) loops located 250 feet in advance of the stop bar. Laterally, all loops shall have the saw-cut nearest the center of the road located 4' from the existing roadway centerline.

DESIGNED	EB
DRAWN	FCL-3
CRP	320922
SCALE	
HOR.	1"=20'
VERT.	1"=20'
DATE	11-2-93
SHEET	33OF 35

CALL 48 HOURS BEFORE YOU DIG 696-4848 "It's the Law" CLARK COUNTY UTILITIES COORDINATING COUNCIL

TRANSPORTATION DIVISION
DESIGN SECTION

N.E. 76th Street at N.E. 107th Avenue
Traffic Signal System Plan
(Existing Signal Plan)

SS5

STUART S. BERETH STATE OF WASHINGTON 17827 REGISTERED PROFESSIONAL ENGINEER EXPIRES AUG. 17, 1994

CLARK COUNTY WASHINGTON

Jan 23, 2004 - 4:25pm M&S DRAWING FILE: W:\DWG\3500\3573\Final Design\SS5-76ssig.dwg

T. 2 N., R. 2 E., W. M.

WIRING SCHEDULE

RUN NO.	ENCLOSURE OR ATTACHMENT	TRAFFIC SIGNALS	PEDESTRIAN SIGNALS	DETECTION: INDUCTIVE LOOPS	DETECTION: EXISTING MICRO LOOPS	DETECTION: PEDESTRIAN	ILLUMINATION: POWER	ILLUMINATION: BRANCH	OPTICAL PREEMPTION	SIGNAL SYSTEM POWER	COORDI-NATION	WIRED SPARES	RUN NO.
1	SAW-CUT			2#12 TP									1
2	SAW-CUT			4#12 TP									2
3	SIGNAL MAST ARM	1-5/cc											3
4	SIGNAL MAST ARM	2-5/cc											4
5	SIGNAL MAST ARM	2-5/cc							1#20-3cc/s				5
6	SIGNAL MAST ARM	3-5/cc											6
7	SIGNAL MAST ARM	3-5/cc							1#20-3cc/s				7
8	SIGNAL MAST ARM	4-5/cc											8
9	SIGNAL MAST ARM	3-5/cc							2#20-3cc/s				9
10	ILLUM. MAST ARM							2#10 PB					10
11	1" PVC			1#18-4cc/s							1#18-4cc/s		11
12	EXISTING 1" RM				EXISTING 1#18-4cc/s								12
13	3" PVC*										1#18-4cc/s*		13
14	3" PVC			1#18-4cc/s							1#18-4cc/s		14
15	1" PVC			2#12 TP									15
16	1" RM									2#4			16
17	EXISTING 1" PVC			1#18-4cc/s	EXISTING 1#18-4cc/s						1#18-4cc/s		17
18	3" PVC			2#18-4cc/s							1#18-4cc/s		18
19	EXISTING 1" PVC			2#18-4cc/s	EXISTING 1#18-4cc/s						1#18-4cc/s		19
20	1" PVC			2#18-4cc/s	1#18-4cc/s								20
21	1" PVC			4#12 TP									21
22	EXISTING 1" PVC			3#18-4cc/s	EXISTING 1#18-4cc/s						1#18-4cc/s		22
23	3" PVC*			4#18-4cc/s							1#18-4cc/s		23
24	1" PVC			6#12 TP									24
25	1-1/2" PVC			8#12 TP									25
26	1-1/2" PVC			10#12 TP									26
27	2 RM	2-5/cc	1-5/cc			1#18-4cc/s	2#10	1#12				4#12	27
28	2 RM	3-5/cc	1-5/cc			1#18-4cc/s		2#12	1#20-3cc/s			4#12	28
29	2 RM	3-5/cc	1-5/cc			1#18-4cc/s		2#12	1#20-3cc/s			4#12 & 1#18-4cc/s	29
30	2 RM	2-5/cc	1-5/cc			1#18-4cc/s		2#12	2#20-3cc/s			4#12	30
31	2-1/2" RM	2-5/cc	1-5/cc	4#18-4cc/s	1#18-4cc/s	1#18-4cc/s		2#12	2#20-3cc/s			4#12	31
32	3-1/2" RM	3-5/cc	1-5/cc	6#18-4cc/s		1#18-4cc/s		2#12	1#20-3cc/s		1#18-4cc/s	4#12	32
33	3-1/2" RM	3-5/cc	1-5/cc	10#18-4cc/s	1#18-4cc/s	1#18-4cc/s		2#12	1#20-3cc/s		1#18-4cc/s	4#12	33
34	3" RM	5-5/cc	2-5/cc	9#18-4cc/s	2#18-4cc/s	2#18-4cc/s		4#12	3#20-3cc/s		1#18-4cc/s	8#12 & 1#18-4cc/s	34

WIRING SCHEDULE LEGEND:

PB = Pole and Bracket cable
TP = Twisted Pair(s) of #12 AWG Type USE inductive loop wires
RM = Rigid Metal conduit
PVC = Rigid Polyvinyl Chloride (plastic) conduit
5/cc = Five-conductor traffic signal display cable
4cc/s = multi-conductor communication cable having stranded copper conductors, aluminum/polyester foil shield, and high-density polyethylene jacket
* = part of "TRAFFIC SIGNAL INTERCONNECT"

SIGNAL HEAD DISPLAYS

HEADS 31/81 and 41/71 | HEADS 11 and 51 | HEADS 21, 22, 42, 61, 62 and 82 | HEADS 28, 29, 48, 49 68, 69, 88 and 89

NOTES:
1. Heads 11 and 51 and the two arrow sections of heads 31/81 and 41/71 shall be optically programmed.
2. Traffic signal heads shall have 12" sections, square doors, backplates (except for heads 31/81 and 41/71 which do not require backplates), Type M mounts, and tunnel visors (except optically programmed sections, which have cadet visors).
3. Pedestrian signal heads are 16"(H) x 19½"(W) x 10½"(D) units having solid-filled LED "HAND" and LED "WALKER" messages having a two (2) digit, seven (7) segment numerical count down display, Z-crate visors, and Type E mounts.

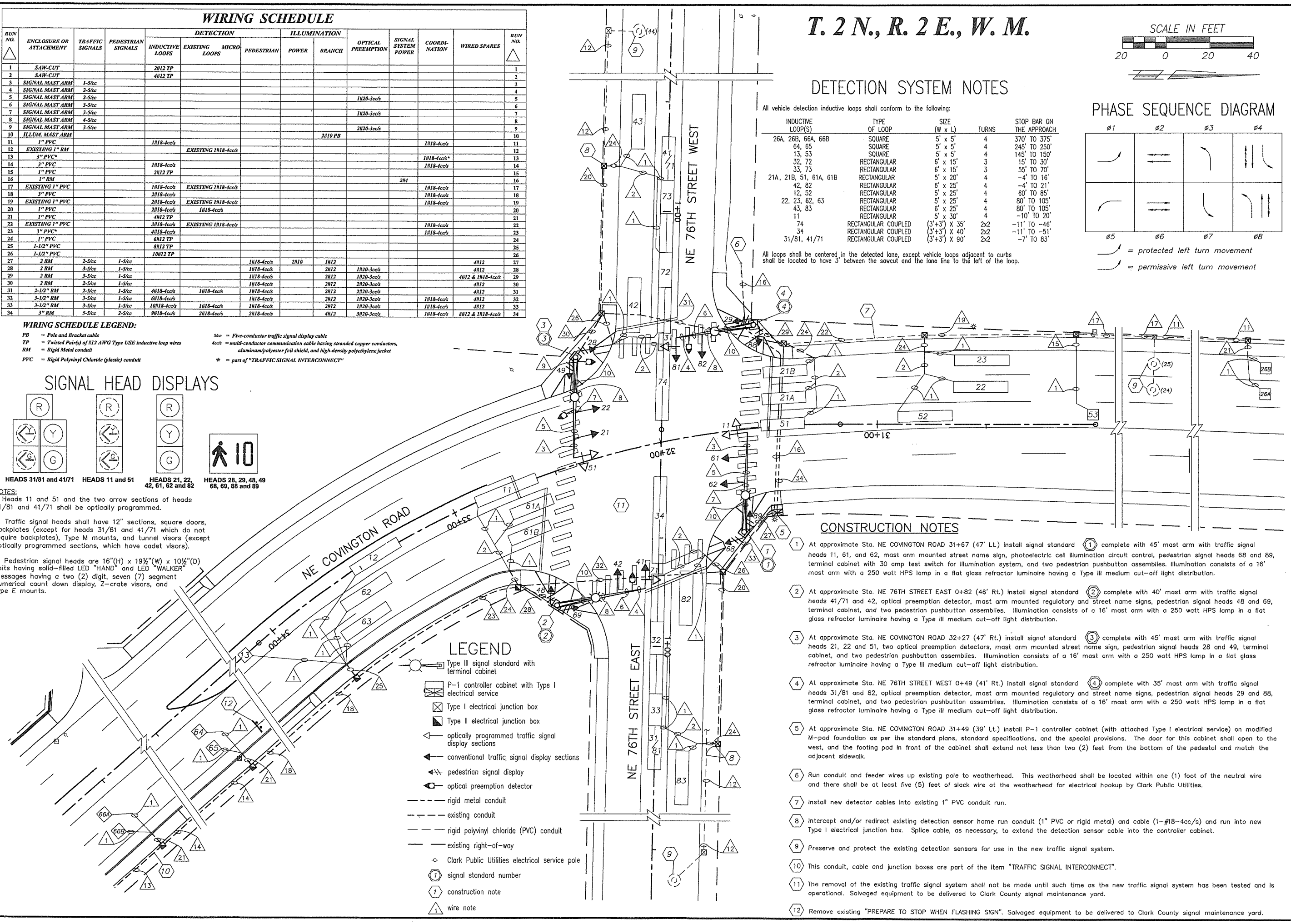

DETECTION SYSTEM NOTES

All vehicle detection inductive loops shall conform to the following:

INDUCTIVE LOOP(S)	TYPE OF LOOP	SIZE (W x L)	TURNS	STOP BAR ON THE APPROACH
26A, 26B, 66A, 66B	SQUARE	5' x 5'	4	370' TO 375'
64, 65	SQUARE	5' x 5'	4	245' TO 250'
13, 53	SQUARE	5' x 5'	4	145' TO 150'
32, 72	RECTANGULAR	6' x 15'	3	15' TO 30'
33, 73	RECTANGULAR	6' x 15'	3	55' TO 70'
21A, 21B, 51, 61A, 61B	RECTANGULAR	5' x 20'	4	-4' TO 16'
42, 82	RECTANGULAR	6' x 25'	4	-4' TO 21'
12, 52	RECTANGULAR	5' x 25'	4	60' TO 85'
22, 23, 62, 63	RECTANGULAR	5' x 25'	4	80' TO 105'
43, 83	RECTANGULAR	6' x 25'	4	80' TO 105'
11	RECTANGULAR	5' x 30'	4	-10' TO 20'
74	RECTANGULAR COUPLED	(3'+3') X 35'	2x2	-11' TO -46'
34	RECTANGULAR COUPLED	(3'+3') X 40'	2x2	-11' TO -51'
31/81, 41/71	RECTANGULAR COUPLED	(3'+3') X 90'	2x2	-7' TO 83'

All loops shall be centered in the detected lane, except vehicle loops adjacent to curbs shall be located to have 3' between the sawcut and the lane line to the left of the loop.

SCALE IN FEET
20 0 20 40

PHASE SEQUENCE DIAGRAM

CONSTRUCTION NOTES

1. At approximate Sta. NE COVINGTON ROAD 31+67 (47' Lt.) install signal standard (1) complete with 45' mast arm with traffic signal heads 11, 61, and 62, mast arm mounted street name sign, photoelectric cell illumination circuit control, pedestrian signal heads 68 and 89, terminal cabinet with 30 amp test switch for illumination system, and two pedestrian pushbutton assemblies. Illumination consists of a 16' mast arm with a 250 watt HPS lamp in a flat glass refractor luminaire having a Type III medium cut-off light distribution.
2. At approximate Sta. NE 76TH STREET EAST 0+82 (46' Rt.) install signal standard (2) complete with 40' mast arm with traffic signal heads 41/71 and 42, optical preemption detector, mast arm mounted regulatory and street name signs, pedestrian signal heads 48 and 69, terminal cabinet, and two pedestrian pushbutton assemblies. Illumination consists of a 16' mast arm with a 250 watt HPS lamp in a flat glass refractor luminaire having a Type III medium cut-off light distribution.
3. At approximate Sta. NE COVINGTON ROAD 32+27 (47' Rt.) install signal standard (3) complete with 45' mast arm with traffic signal heads 21, 22 and 51, two optical preemption detectors, mast arm mounted street name sign, pedestrian signal heads 28 and 49, terminal cabinet, and two pedestrian pushbutton assemblies. Illumination consists of a 16' mast arm with a 250 watt HPS lamp in a flat glass refractor luminaire having a Type III medium cut-off light distribution.
4. At approximate Sta. NE 76TH STREET WEST 0+49 (41' Rt.) install signal standard (4) complete with 35' mast arm with traffic signal heads 31/81 and 82, optical preemption detector, mast arm mounted regulatory and street name signs, pedestrian signal heads 29 and 88, terminal cabinet, and two pedestrian pushbutton assemblies. Illumination consists of a 16' mast arm with a 250 watt HPS lamp in a flat glass refractor luminaire having a Type III medium cut-off light distribution.
5. At approximate Sta. NE COVINGTON ROAD 31+49 (39' Lt.) install P-1 controller cabinet (with attached Type I electrical service) on modified M-pad foundation as per the standard plans, standard specifications, and the special provisions. The door for this cabinet shall open to the west, and the footing pad in front of the cabinet shall extend not less than two (2) feet from the bottom of the pedestal and match the adjacent sidewalk.
6. Run conduit and feeder wires up existing pole to weatherhead. This weatherhead shall be located within one (1) foot of the neutral wire and there shall be at least five (5) feet of slack wire at the weatherhead for electrical hookup by Clark Public Utilities.
7. Install new detector cables into existing 1" PVC conduit run.
8. Intercept and/or redirect existing detection sensor home run conduit (1" PVC or rigid metal) and cable (1-#18-4cc/s) and run into new Type I electrical junction box. Splice cable, as necessary, to extend the detection sensor cable into the controller cabinet.
9. Preserve and protect the existing detection sensors for use in the new traffic signal system.
10. This conduit, cable and junction boxes are part of the item "TRAFFIC SIGNAL INTERCONNECT".
11. The removal of the existing traffic signal system shall not be made until such time as the new traffic signal system has been tested and is operational. Salvaged equipment to be delivered to Clark County signal maintenance yard.
12. Remove existing "PREPARE TO STOP WHEN FLASHING SIGN". Salvaged equipment to be delivered to Clark County signal maintenance yard.

DESIGNED	EB
DRAWN	KB
CRP	301022
HOR.	1"=20'
VERT.	NA
DATE	4/14/03
DWG:	S01
SHEET 44	OF 60

CALL 48 HOURS BEFORE YOU DIG 1-800-553-4344 "It's the Law" NORTHWEST UTILITIES NOTIFICATION CENTER

EUGENE S. BERGEN STATE OF WASHINGTON 18227 REGISTERED PROFESSIONAL ENGINEER
EXPIRES AUG 17, 2003

DESIGN & ENGINEERING DIVISION
DESIGN SECTION

NE COVINGTON ROAD @ NE 76TH STREET
TRAFFIC SIGNAL PLAN

proud past, promising future
CLARK COUNTY WASHINGTON