CAPITAL IMPROVEMENTS PROGRAM
COUNTY ROAD PROJECT # 330522

NE 99TH STREET

FROM SR-503 TO NE 137TH AVE

PLANS FOR THE CONSTRUCTION OF
ROADWAYS AND STORM DRAINAGE

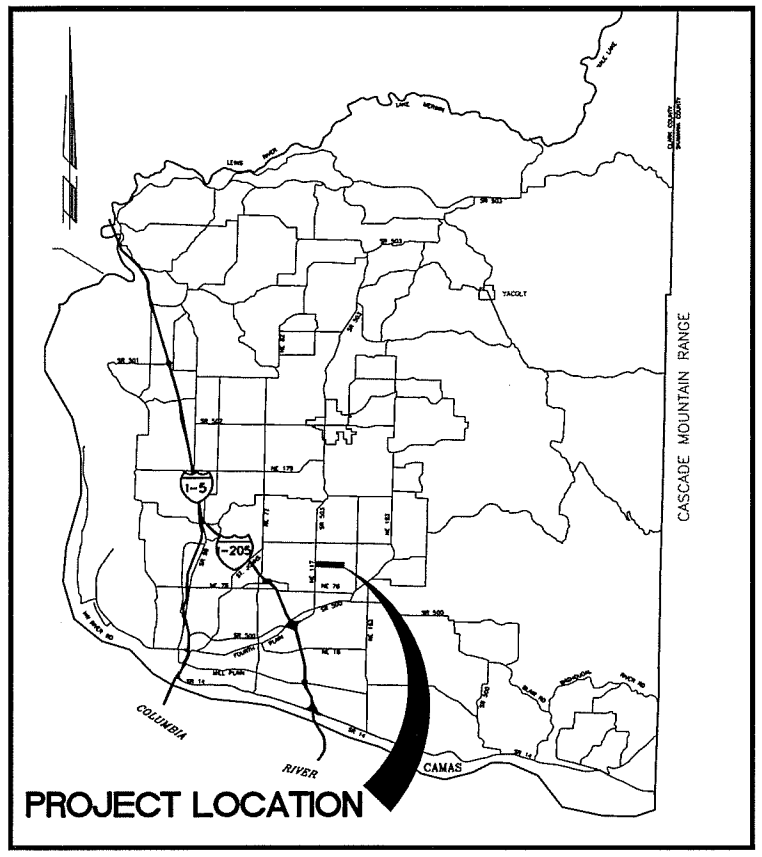

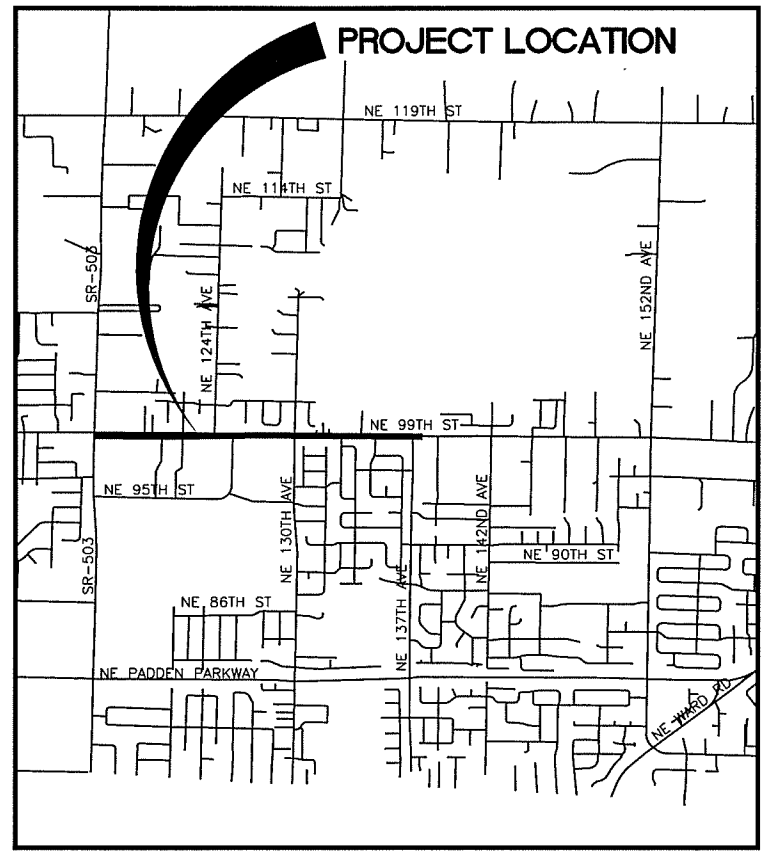

INDEX OF SHEETS

1	CV1	COVER SHEET
2	SQ1	SUMMARY OF QUANITITIES AND LEGEND
3	TS1	TYPICAL SECTIONS
4	HV1	HORIZONTAL & VERTICAL CONTROL
5	EC1	EROSION CONTROL PLAN
6	EC2	EROSION CONTROL PLAN
7	EC3	EROSION CONTROL DETAILS
8	D01	ROADWAY DETAILS
9	D02	ROADWAY DETAILS
10	D03	ROADWAY DETAILS
11	D04	ROADWAY DETAILS
12	SWF1	STORMWATER FACILITY #1
13	SWF2	STORMWATER FACILITY #2
14	SWF3	STORMWATER FACILITY DETAILS
15	SWF4	STORMWATER FACILITY DETAILS
16	PP1	PLAN & PROFILE (B.O.P. TO 18+00)
17	PP2	PLAN & PROFILE (STA 18+00 TO 23+00)
18	PP3	PLAN & PROFILE (STA 23+00 TO 28+00)
19	PP4	PLAN & PROFILE (STA 28+00 TO 33+00)
20	PP5	PLAN & PROFILE (STA 33+00 TO 38+00)
21	PP6	PLAN & PROFILE (STA 38+00 TO 43+00)
22	PP7	PLAN & PROFILE (STA 43+00 TO 48+00)
23	PP8	PLAN & PROFILE (STA 48+00 TO 53+00)
24	PP9	PLAN & PROFILE (STA 53+00 TO 58+00)
25	PP10	PLAN & PROFILE (STA 58+00 TO 63+00)
26	PP11	PLAN & PROFILE (STA 63+00 TO E.O.P.)
27	DP1	DRAINAGE PLAN (B.O.P. TO 18+00)
28	DP2	DRAINAGE PLAN (STA 18+00 TO 23+00)
29	DP3	DRAINAGE PLAN (STA 23+00 TO 28+00)
30	DP4	DRAINAGE PLAN (STA 28+00 TO 33+00)
31	DP5	DRAINAGE PLAN (STA 33+00 TO 38+00)
32	DP6	DRAINAGE PLAN (STA 38+00 TO 43+00)
33	DP7	DRAINAGE PLAN (STA 43+00 TO 48+00)
34	DP8	DRAINAGE PLAN (STA 48+00 TO 53+00)
35	DP9	DRAINAGE PLAN (STA 53+00 TO 58+00)
36	DP10	DRAINAGE PLAN (STA 58+00 TO 63+00)
37	DP11	DRAINAGE PLAN (STA 63+00 TO E.O.P.)
38	I01	INTERSECTION PLAN (117TH, 130TH, 134TH, 137TH AVENUES)
39	SS1	SIGNING & STRIPING PLAN
40	SS2	SIGNING AND STRIPING PLAN

COMMISSIONERS:

BETTY SUE MORRIS, Chair
JUDIE STANTON, Commissioner
CRAIG PRIDEMORE, Commissioner

proud past, promising future
CLARK COUNTY
WASHINGTON

DEPARTMENT OF
PUBLIC WORKS

DESIGN AND ENGINEERING DIVISION- DESIGN SECTION

BRUCE A. KUNZE
STATE OF WASHINGTON
39868
REGISTERED
PROFESSIONAL ENGINEER
EXPIRES:APRIL 7, 2005

PRELIMINARY

30% REVIEW SET

Quality Assurance	Project Manager	PW Director/ County Engineer
Tom Grange, P.E. DATE:	Dave Doland, P.E. DATE:	Peter Capell, P.E. DATE:

proud past, promising future
CLARK COUNTY
WASHINGTON

Recommended for Approval

Grading _____ Erosion _____

Storm Water Plan _____

Development Review Manager Date

N:\CIP\PROJECTS\330522-NE99thSt-117To137\DESIGN\DWGS\99COV.dwg, Layout1, 1/28/2004 4:24:35 PM, begleyk

SUMMARY OF QUANTITIES

ITEM_NUM	BID_ITEM	QUANTITY	UNIT	DESCRIPTION
1		1	L.S.	MOBILIZATION
2		1	CALC.	MINOR CHANGE
3		3000	HOUR	TRAFFIC CONTROL LABOR
4		800	HOUR	TRAFFIC CONTROL SUPERVISOR
5		1	L.S.	TEMPORARY TRAFFIC CONTROL DEVICES
6		600	S.F.	CONSTRUCTION SIGNS CLASS "A"
7		1	L.S.	CLEARING AND GRUBBING
8		1	EST.	ROADSIDE CLEANUP- FORCE ACCOUNT
9		1	L.S.	REMOVAL OF STRUCTURES AND OBSTRUCTION
10		13000	C.Y.	ROADWAY EXCAVATION (INCL. HAUL)
11		2000	L.F.	SAWCUT EXISTING (ASPHALT) PAVEMENT
12		1500	MGAL	WATER
13		8300	TON	CRUSHED SURFACING BASE COURSE
14		3760	TON	ASPHALT CONCRETE PAVEMENT CL. A
15		5640	TON	ASPHALT CONCRETE PAVEMENT CL. E
16		4100	S.Y.	CEMENT CONCRETE APPROACH, 3-DAY
17		2000	S.F.	MASONRY WALL / MASONRY RETAINING WALL
18		6000	L.F.	TRENCH SAFETY SYSTEM
19		200	L.F.	PERFORATED UNDERDRAIN PIPE 24 IN. DIAM.
20		1000	L.F.	STORM SEWER PIPE, 10 IN. DIAM.
21		4800	L.F.	STORM SEWER PIPE, 12 IN. DIAM.
22		440	L.F.	STORM SEWER PIPE, 18 IN. DIAM.
23		23	EACH	MANHOLE 48 IN. DIAM. TYPE 1
24		4	EACH	PRECAST CONCRETE DRYWELL
25		45	EACH	CONCRETE COMBINATION CURB INLET
26		25	EACH	ADJUST MANHOLE/ CATCH BASIN/ INLET/ DRYWELL METHOD 1
27		40	EACH	ADJUST WATER/GAS VALVE COVER, RIM, OR FRAME
28		2	EACH	RELOCATE WATER METER BOX AND SERVICE
29		2	EACH	MOVING EXISTING HYDRANTS
30		5500	L.F.	SILT FENCE
31		2	EACH	STABILIZED CONSTRUCTION ENTRANCE
32		2	EACH	TIRE WASH
33		50	EACH	INLET PROTECTION
34		1	EACH	EROSION CONTROL REINSPECTION FEE
35		100	HOUR	ESC LEAD
36		1	L.S.	SPILL PREVENTION PLAN
37		1	ACRE	SEEDING AND MULCHING
38		1	L.S.	LANDSCAPING
39		8430	L.F.	CEMENT CONC. BARRIER CURB AND GUTTER
40		1500	L.F.	CHAIN LINK FENCE - TYPE 1
41		10	EACH	DOUBLE 20 FT. CHAIN LINK GATE
42		15	EACH	SINGLE 6 FT. CHAIN LINK GATE
43		200	L.F.	FENCE RELOCATION (INCL GATE)
44		4800	S.Y.	CEMENT CONCRETE SIDEWALK
45		10	EACH	MAILBOX SUPPORT, TYPE 1-S
46		1	L.S.	TRAFFIC SIGNAL MODIFICATION (NE 117th ??)
47		1	L.S.	UTILITY ADJUSTMENTS

LEGEND

- ROW LINE
- NEW EDGE OF PAVEMENT
- NEW CURB FACE LINE
- NEW CURB BACK LINE
- NEW SIDEWALK
- NEW CENTER LINE
- NEW FENCE LINE
- NEW STORM DRAIN OR CULVERT
- NEW FILL LIMITS
- NEW CUT LIMITS
- SAWCUT LINE
- PERMANENT SLOPE EASEMENT
- NEW SILT FENCE
- EXISTING EDGE OF PAVEMENT
- EXISTING CURB LINE
- EXISTING CENTER LINE
- EXISTING FENCE LINE
- EXISTING TELEPHONE LINE
- EXISTING WATER LINE
- EXISTING UNDERGROUND ELECTRIC
- EXISTING SANITARY SEWER LINE
- EXISTING STORM DRAINAGE
- EXISTING GAS LINE
- EXISTING CULVERT
- EXISTING DITCH CENTER LINE
- EXISTING GUARDRAIL

SYMBOLS

- NEW CATCH BASIN (CB)
- NEW MANHOLE (MH)
- NEW CURB INLET (CI)
- NEW COMBINATION CURB INLET (CCI)
- NEW MAIL BOX
- NEW HANDICAP RAMP
- CURVE TABLE
- EXISTING TRANSFORMER
- EXISTING ELEC TOWER
- EXISTING SANITARY SEWER MH
- EXISTING FIRE HYDRANT
- EXISTING CLEAN OUT
- EXISTING GAS VALVE
- EXISTING WATER METER
- EXISTING WATER VALVE
- EXISTING SIGNAL POLE
- EXISTING TELEPHONE VAULT
- EXISTING TELEVISION BOX
- EXISTING WELL
- EXISTING BRUSH LINE
- EXISTING HEDGE
- EXISTING CURB INLET (CI)
- EXISTING CATCH BASIN (CB)
- EXISTING STORM MH
- EXISTING MISC MH
- EXISTING SHRUB
- EXISTING CONIFEROUS TREE
- EXISTING DECIDUOUS TREE
- EXISTING SIGN
- EXISTING DECIDUOUS TREE
- EXISTING J BOX
- EXISTING TELEPHONE MANHOLE
- EXISTING TELEPHONE POLE
- EXISTING LIGHT
- EXISTING GUY ANCHOR
- EXISTING POWER POLE
- EXISTING MAIL BOX
- EXISTING TELEPHONE PEDESTAL
- EXISTING SPRINKLER HEAD
- TRAVERSE POINT
- TEST HOLE

PRELIMINARY

DESIGNED	BAK
DRAWN	KB
CRP	330522
HOR.	NA
VERT.	NA
DATE	1/28/04
DWG:	SQ1
SHEET X	OF

CALL 48 HOURS BEFORE YOU DIG 1-800-553-4344 "It's the Law" NORTHWEST UTILITIES NOTIFICATION CENTER

STATE OF WASHINGTON BRENT A. CARLILE 39868 REGISTERED PROFESSIONAL ENGINEER EXPIRES-APRIL 7, 2004

DESIGN & ENGINEERING DIVISION
DESIGN SECTION

NE 99TH STREET
SUMMARY OF QUANTITIES & LEGEND

proud past, promising future
CLARK COUNTY WASHINGTON

N:\CIP\PROJECTS\330522-NE99thSt-117To137\DESIGN\DWGS\99SQ01.dwg, Layout1, 1/28/2004 4:29:46 PM, begleyk

PRELIMINARY

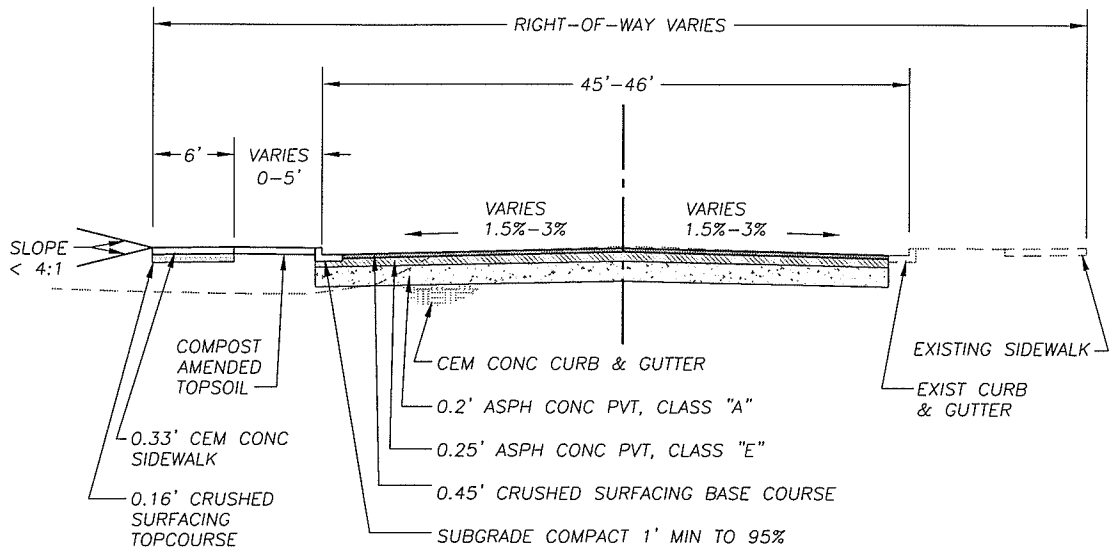

NE 99TH STREET

STA 13+82 TO 21+25
STA 33+50 TO 35+32
STA 53+16 TO 59+50

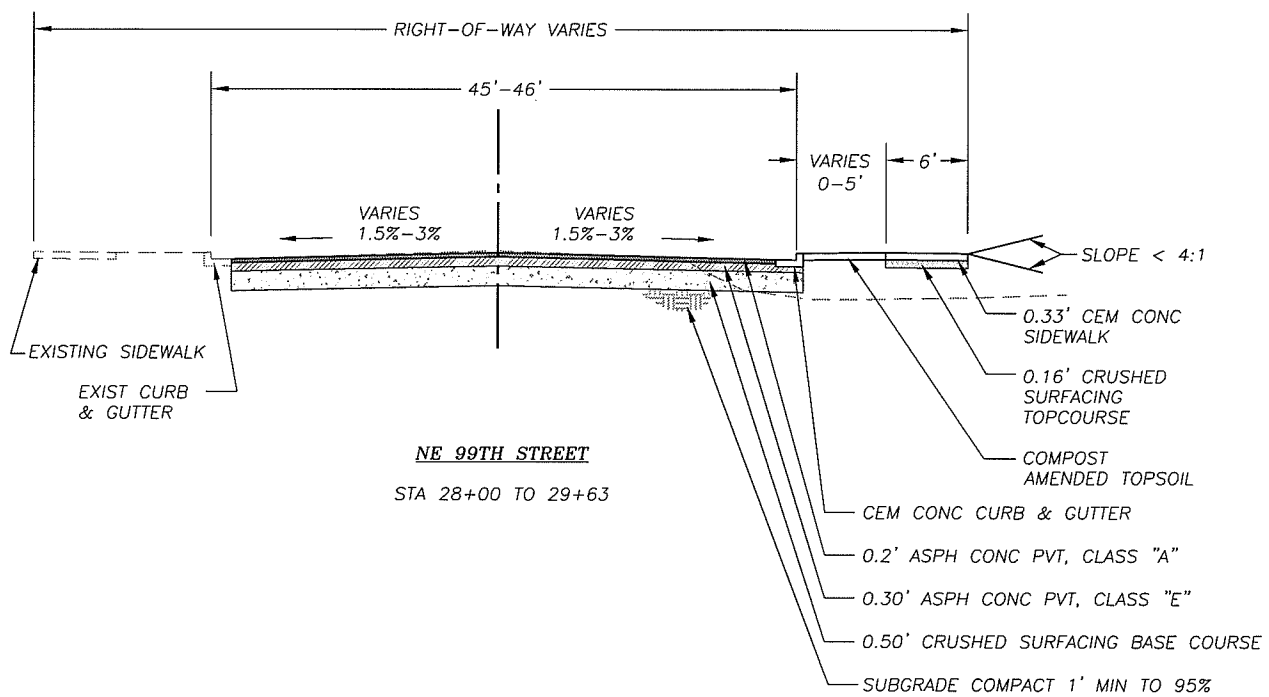

NE 99TH STREET

STA 28+00 TO 29+63

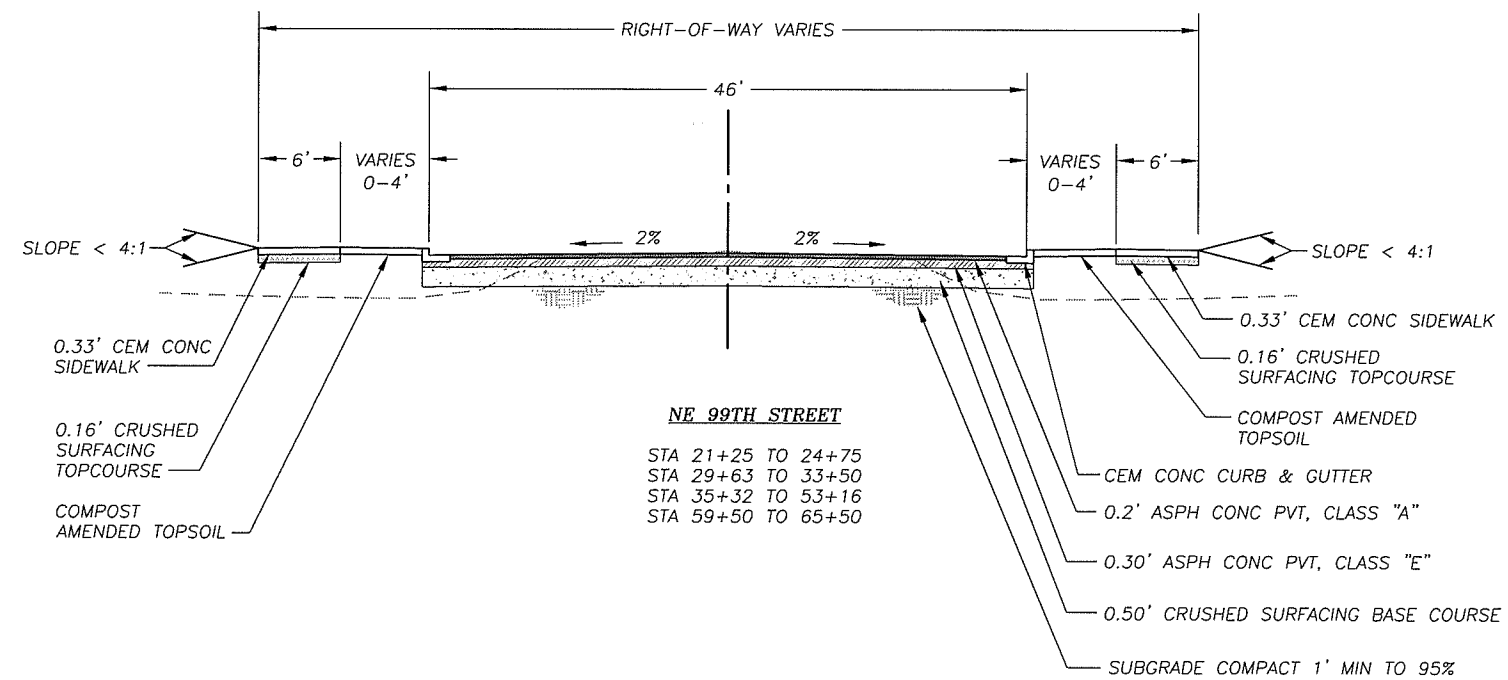

NE 99TH STREET

STA 21+25 TO 24+75
STA 29+63 TO 33+50
STA 35+32 TO 53+16
STA 59+50 TO 65+50

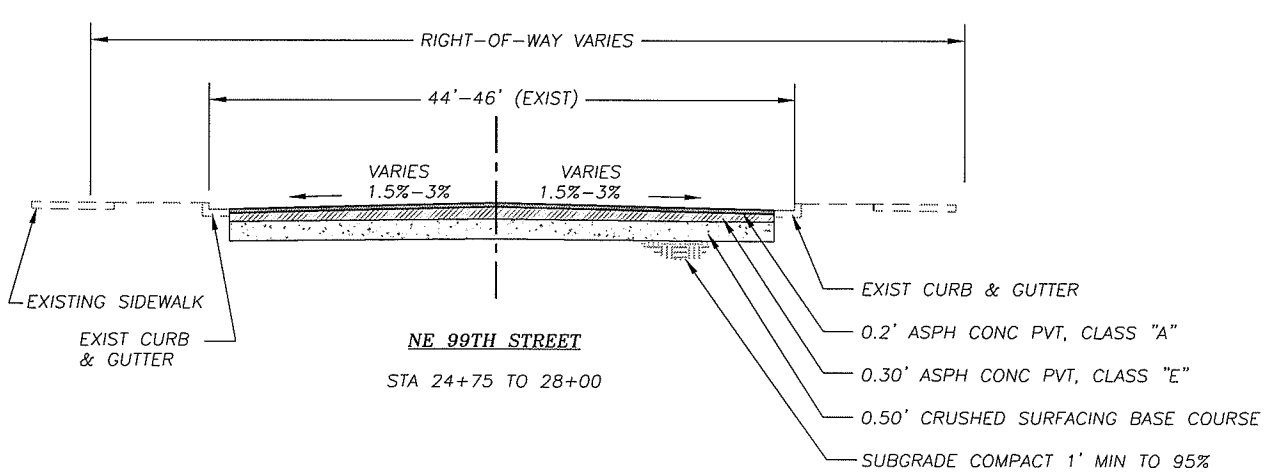

NE 99TH STREET

STA 24+75 TO 28+00

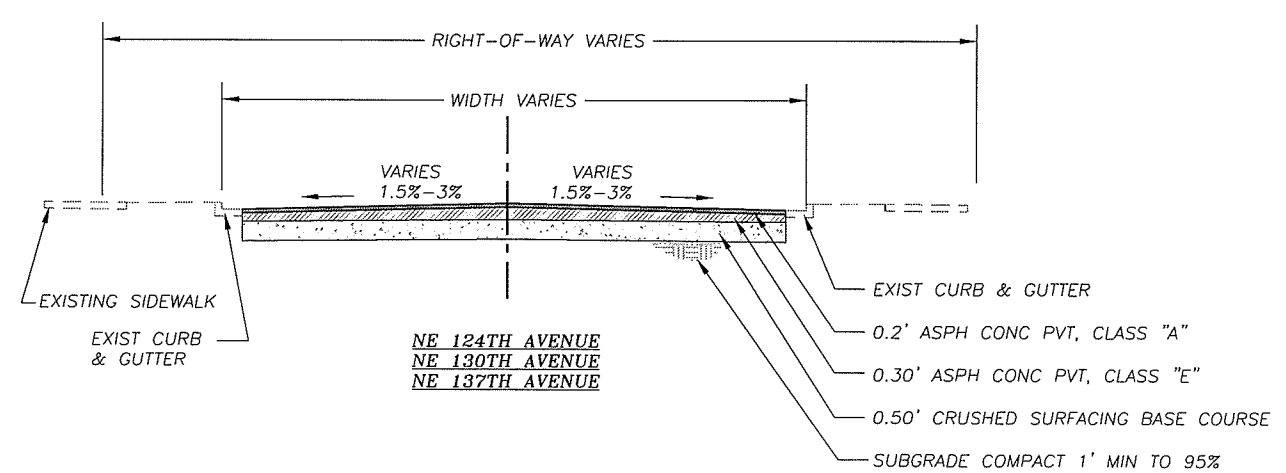

NE 124TH AVENUE
NE 130TH AVENUE
NE 137TH AVENUE

DESIGNED	BAK
DRAWN	KB
CRP	330522
HOR.	NA
VERT.	NA
DATE	1/28/04
DWG:	TS1
SHEET	OF

CALL 48 HOURS BEFORE YOU DIG
1-800-553-4344
"It's the Law"
NORTHWEST UTILITIES NOTIFICATION CENTER

STEVE A. KLIS
STATE OF WASHINGTON
21868
REGISTERED PROFESSIONAL ENGINEER
EXPIRES APRIL 7, 2004

DESIGN & ENGINEERING DIVISION
DESIGN SECTION

NE 99TH STREET
TYPICAL SECTIONS

proud past, promising future
CLARK COUNTY
WASHINGTON

N:\CIP\PROJECTS\330522-NE99thSt-117To137\DESIGN\DWGS\99TS01.dwg, Layout1, 1/28/2004 4:31:49 PM, begleyk

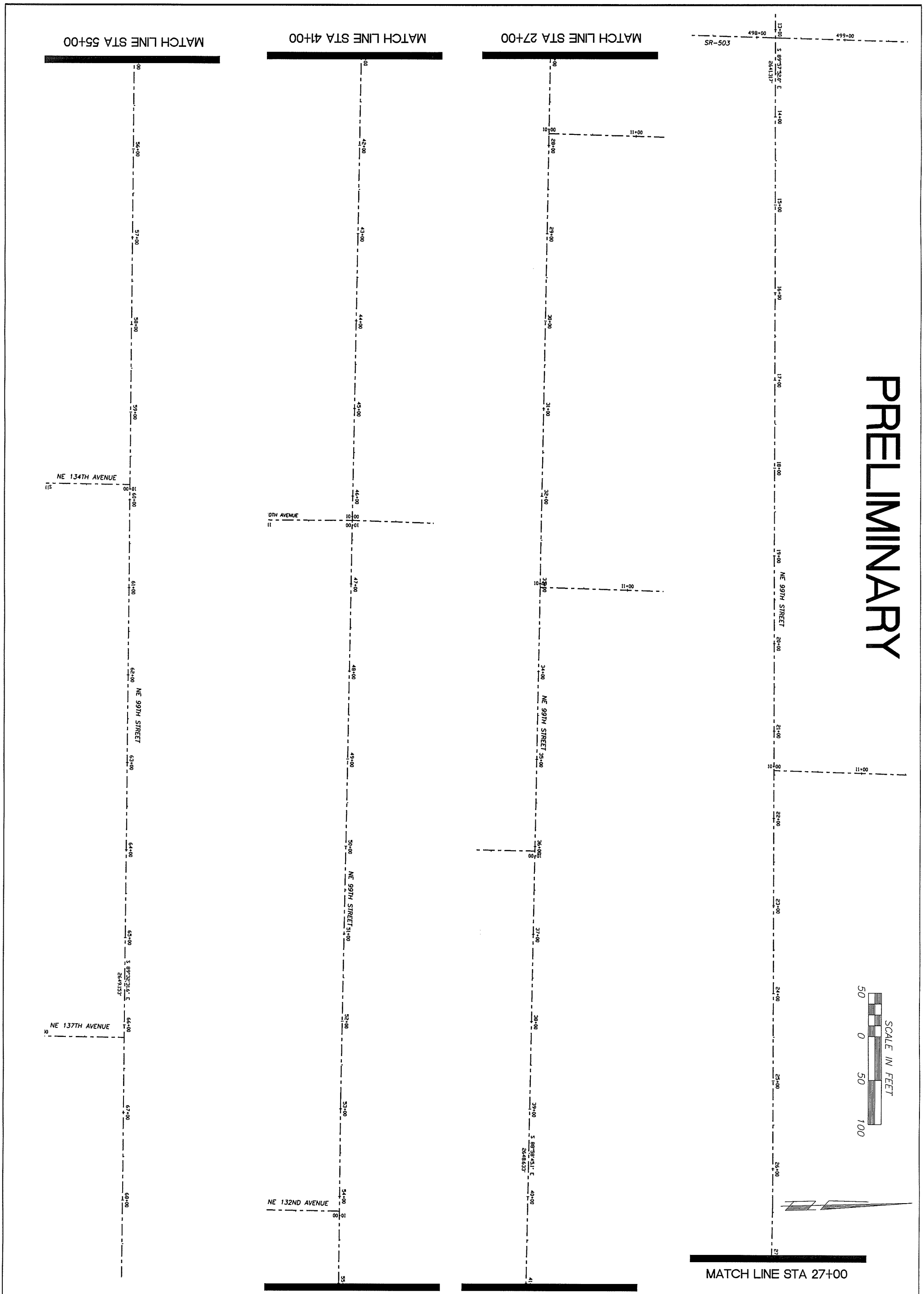

proud past, promising future

CLARK COUNTY
WASHINGTON

DESIGN & ENGINEERING DIVISION
DESIGN SECTION

NE 99TH STREET
HORIZONTAL AND VERTICAL CONTROL

BRUCE A. KLUG
STATE OF WASHINGTON
39868
REGISTERED
PROFESSIONAL ENGINEER
EXPIRES:APRIL 7, 2005

CALL 48 HOURS BEFORE YOU DIG
1-800-553-4344
"It's the Law"
NORTHWEST UTILITIES NOTIFICATION CENTER

DESIGNED	BK
DRAWN	RK
CRP	330522
HOR.	1"=50'
VERT.	NA
DATE	1/28/04
DWG:	HV1
SHEET	OF

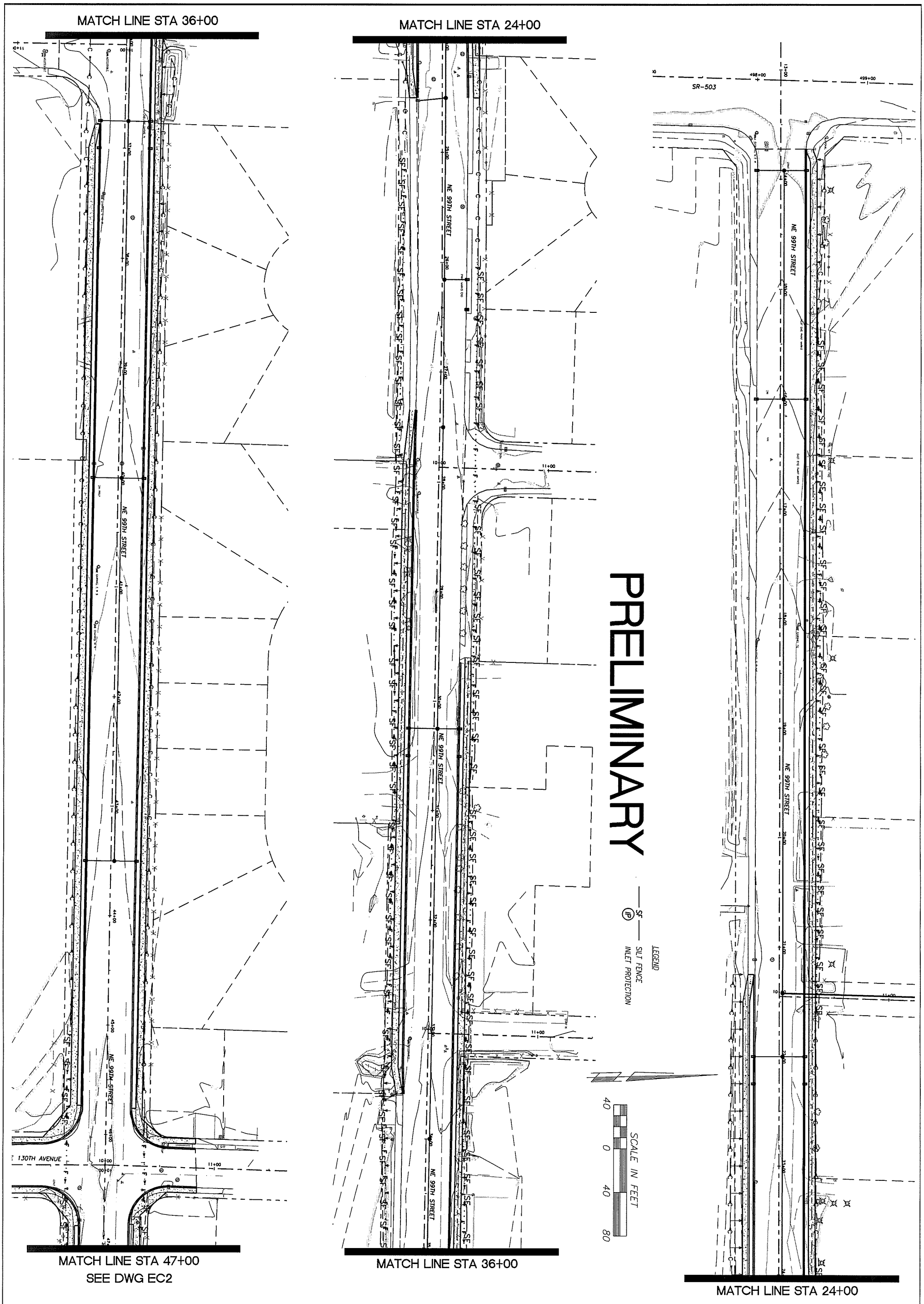

proud past, promising future

CLARK COUNTY
WASHINGTON

DESIGN & ENGINEERING DIVISION
DESIGN SECTION

NE 99TH STREET
EROSION CONTROL PLAN

BRUCE A. KLUG
STATE OF WASHINGTON
39868
REGISTERED
PROFESSIONAL ENGINEER
EXPIRES: APRIL 7, 2004

CALL 48 HOURS BEFORE YOU DIG
1-800-553-4344
"It's the Law"
NORTHWEST UTILITIES NOTIFICATION CENTER

DESIGNED	BAK
DRAWN	BAK
CRP	330522
HOR.	1"=40'
VERT.	NA
DATE	1/28/04
DWG:	EC1
SHEET X	OF

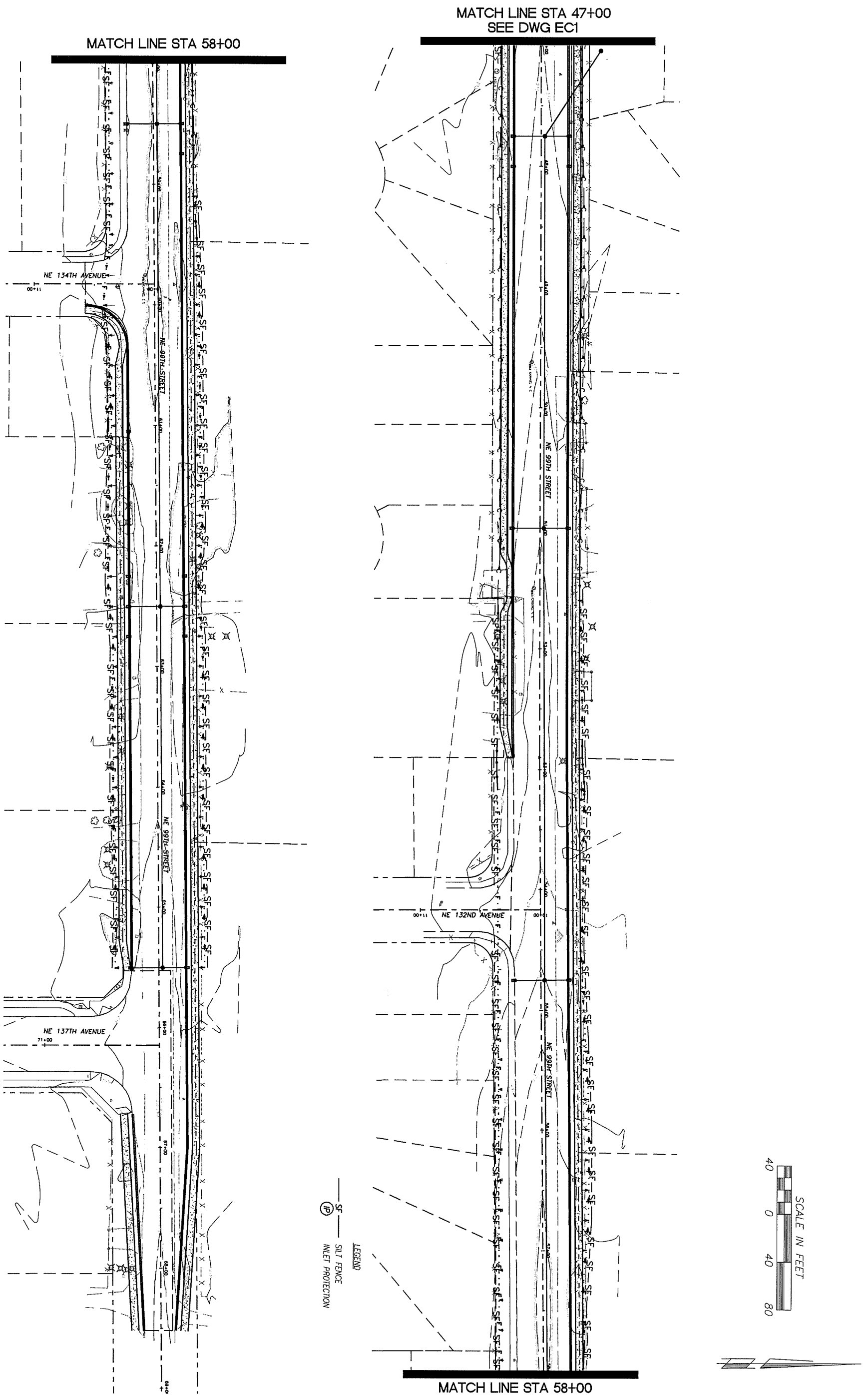

PRELIMINARY

proud past, promising future
CLARK COUNTY
WASHINGTON

DESIGN & ENGINEERING DIVISION
DESIGN SECTION

NE 99TH STREET
EROSION CONTROL PLAN

BRUCE A. KLUG
STATE OF WASHINGTON
39868
REGISTERED
PROFESSIONAL ENGINEER
EXPIRES: APRIL 7, 2004

CALL 48 HOURS BEFORE YOU DIG
1-800-553-4344
"It's the Law"
NORTHWEST UTILITIES NOTIFICATION CENTER

DESIGNED	BAK
DRAWN	BAK
CRP	330522
HOR.	1"=40'
VERT.	NA
DATE	1/28/04
DWG:	EC2
SHEET	OF

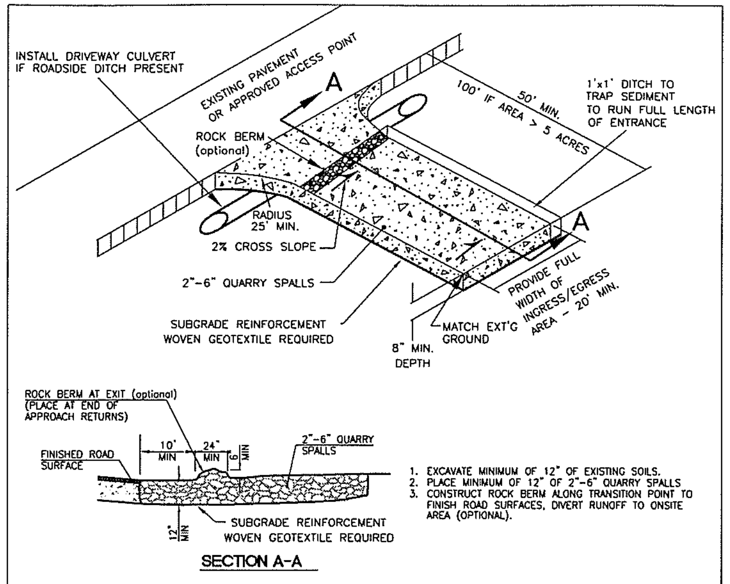

NOTES:

1. FOR DEVELOPMENT PROJECTS REVIEWED BY ENGINEERING SERVICES. NOT FOR USE WITH SINGLE FAMILY OR DUPLEX RESIDENTIAL BUILDING PERMITS. SEE BUILDING DEPT. FOR GRAVEL CONSTRUCTION ENTRANCE PLAN.
2. INSTALL WOVEN GEOTEXTILE FABRIC TO PREVENT SUB-SOIL PUMPING.
3. VEHICLE WASHDOWN AREA, IF REQUIRED, IS TO BE INSTALLED AND USED TO REMOVE SEDIMENT FROM VEHICLES THAT ARE ABOUT TO ENTER AN ESTABLISHED ROAD.
4. WASHDOWN AREA TO BE MADE UP OF CLEAN 2"- 6" QUARRY SPALLS, 1" DEEP (MIN) OVER WOVEN GEOTEXTILE FABRIC. WASHDOWN AREA TO BE FULL WIDTH OF ENTRANCE AND 50' (MIN.), AND 100' IF EXPOSED SOIL IS OVER 5 ACRES.
5. AT TIME OF PRECONSTRUCTION MEETING, THE COUNTY INSPECTOR MAY REQUIRE THE ENTRANCE TO BE PAVED TO THE EDGE OF THE RIGHT-OF-WAY PRIOR TO THE INSTALLATION OF A WASHDOWN ENTRANCE TO AVOID DAMAGE TO THE EXISTING ROADWAY.
6. THE RESPONSIBLE EROSION CONTROL INDIVIDUAL IS TO ENSURE THAT ALL VEHICLES USE THIS ENTRANCE AND ARE TO BE INSPECTED AND CLEANED OF SOILS BEFORE LEAVING PROJECT, AND THAT THE ENTRANCE IS TO BE KEPT CLEAN AT ALL TIMES.

NO.	REVISIONS	DATE	BY

DWG: E-1.DWG

Department of Public Works — CLARK COUNTY WASHINGTON — proud past, promising future

STANDARD CONSTRUCTION ENTRANCE — APPROVED DRAFT — COUNTY ENGINEER — DATE — STANDARD E-1 PLAN No. — DESIGNED SCH — DRAWN SCH — DATE 07/07/03

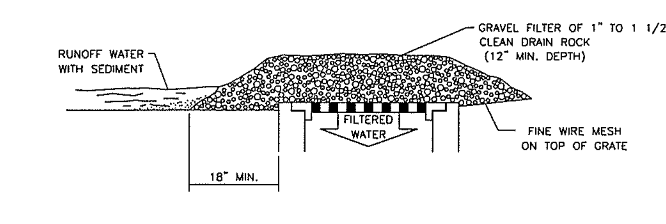

GRAVEL & WIRE MESH

NOT TO BE USED IN TRAVELED WAY IF IT MAY RESULT IN A TRAFFIC HAZARD

INLET PROTECTION NOTES:

1. INLET PROTECTION IS INTENDED TO PREVENT COARSE SEDIMENT FROM ENTERING STORM DRAINAGE SYSTEMS BY FILTERING RUNOFF AND RETAINING SEDIMENT BEFORE IT REACHES A DRAINAGE OR STORM SEWER SYSTEM.
2. PLACE INLET PROTECTION IN AREAS WHERE WATER CAN POND, AND WHERE PONDING WILL NOT HAVE ADVERSE IMPACTS.
3. INLET PROTECTION MUST ALLOW FOR OVERFLOW IN A SEVERE STORM EVENT.
4. INLET PROTECTION TYPES INCLUDE: TYPE 1 - GRAVEL AND WIRE MESH
   TYPE 2 - MASONRY AND ROCK
   TYPE 3 - SEDIMENT FENCE
   TYPE 4 - BIOFILTER BAGS
   TYPE 5 - CATCH BASIN INSERT
5. INSPECT ONCE PER WEEK ON ACTIVE SITES, ONCE EVERY TWO WEEKS ON INACTIVE SITES, AND WITHIN 24 HOURS FOLLOWING A 0.5 INCH RAIN EVENT.
6. CLEAN INLET PROTECTION DURING AND AFTER EACH SIGNIFICANT STORM AND REMOVE SEDIMENT FROM BEHIND STRUCTURE AFTER EVERY STORM.
7. IF ROCK BECOMES CLOGGED WITH SEDIMENT, IT MUST BE CAREFULLY REMOVED FROM THE INLET AND EITHER CLEANED OR REPLACED.
8. ASSESS THE IMPACT OF ALLOWING WATER TO POND AT THE INLET AND PROVIDE AN OVERFLOW WEIR OR SOME OTHER TYPE OF RELIEF AS NEEDED.
9. CONSIDER THE EFFECT OF PLACING OBSTRUCTIONS AT INLETS ON GRADE MAY HAVE ON THEIR EFFICIENCY.
10. USE MECHANICAL MEANS TO REMOVE SEDIMENT DEPOSITS (SHOVEL, BROOM, SWEEPER/VACTOR UNIT).
11. REMOVE SEDIMENT ACCUMULATED ON OR AROUND THE PROTECTION AS NEEDED TO MAINTAIN INTENDED FUNCTION.
12. REPAIR OR REPLACE MATERIALS AS NEEDED TO ENSURE PROPER FUNCTION.

NO.	REVISIONS	DATE	BY

DWG: E-3.DWG

Department of Public Works — CLARK COUNTY WASHINGTON — proud past, promising future

INLET PROTECTION TYPE 1 GRAVEL AND WIRE MESH — APPROVED DRAFT — COUNTY ENGINEER — DATE — STANDARD E-3 PLAN No. — DESIGNED SCH — DRAWN SCH — DATE 08/07/03

STANDARD NOTES FOR EROSION CONTROL PLAN

1. The Contractor shall install and maintain BMP's as shown and perform all actions necessary to prevent erosion, and control sediment from leaving the construction site. Site Contractor shall comply with Clark County Code Chapter 13 .29, Article IV.

2. All erosion control measures shall be in-place and in working condition prior to disturbing and exposing any soil surfaces (i.e. silt fence, construction entrance, sedimentation barriers, sedimentation traps).

3. All erosion prevention and control BMP's shall be maintained and repaired as needed to insure continued performance of their intended function. Needed repairs shall be made as soon as practicable. They are to remain in place and operational during all phases of construction. Construction activities shall not continue or resume until repairs to erosion control facilities are made and the facilities are functional. Any sediment leaving the site or discharging to a sensitive area shall be stopped and controlled immediately. Contaminated areas shall be cleaned and restored.

4. Clearing limits and work area limits shall be delineated and marked. Do not disturb more area than needed for construction requirements.

5. All sensitive or critical areas (wetlands, steep slopes, natural waterways), and buffers shall all be clearly delineated and clearly marked, and protected from sediment deposition.

6. Sediment laden runoff shall be prevented from entering all existing storm water catch basins and inlets affected by construction.

7. No exposed, bare soils shall remain unstabilized for more than two days during the period October 1 thru April 30 or for more than seven days during the period of May 1 through September 30. All disturbed soil surfaces shall be stabilized by a suitable application of "Best Management Practices".

8. Where feasible, no more than 500 feet of trench shall be open at one time. Excavated material shall be placed on the up-hill side of trenches provided it does not conflict with safety requirements.

9. Dewatering devices shall discharge into a sediment trap or sediment pond. No discharge shall be made to a paved street or stormwater collection system without first removing sediment.

10. Cut and fill slopes shall be constructed in a manner that will minimize erosion. Erosion shall be controlled and prevented by such measures as roughening the surface, installation of interceptor ditches, terracing, covering with matting, mulch or plastic sheeting. Runoff shall be prevented from entering a slope and from undercutting the base of slopes.

11. Any soil or debris transported onto roadways and sidewalks shall be removed. Deposits shall be completely removed by shoveling and/or sweeping. Washing shall not be utilized unless specifically approved in writing by the County.

12. All permanent infiltration systems shall be isolated and protected from sediment laden runoff entering to avoid risk of reducing the ability of the systems to infiltrate. Isolation and protection shall not be removed until the drainage area tributary to the system is completely stabilized.

CONTINUED ON SHEET 2

NO.	REVISIONS	DATE	BY

DWG: ECN1.DWG

Department of Public Works — CLARK COUNTY WASHINGTON — proud past, promising future

STANDARD NOTES FOR EROSION CONTOL PLAN — APPROVED DRAFT — COUNTY ENGINEER — DATE — STANDARD ECN1 PLAN No. — DESIGNED SCH — DRAWN SCH — DATE 08/02/02

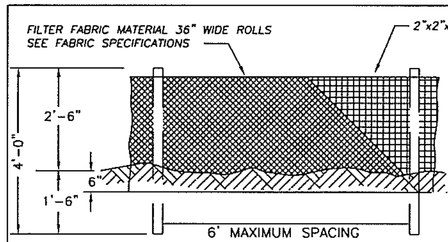

SEDIMENT FENCE FABRIC SPECIFICATIONS
(Woven Polyproylene sediment fence fabric)

PROPERTY	TEST PROCEDURE	MIN. FABRIC VALUE
Grab Tensile Strength	ASTM D-4632	180 lbs.
Grab elongation	ASTM D-4632	15%
Trapezoid Tear	ASTM D-4533	70 lbs.
Mullen Burst	ASTM D-3786	300 psi.
Puncture	ASTM D-4833	80 lbs.
Permitivity	ASTM D-4491	0.07 sec-1
Permeability	ASTM D-4491	.005 cm/sec
A.O.S.	ASTM D-4751	50 U.S. Sieve
UV Resistance(500 hrs)	ASTM D-4355	90%

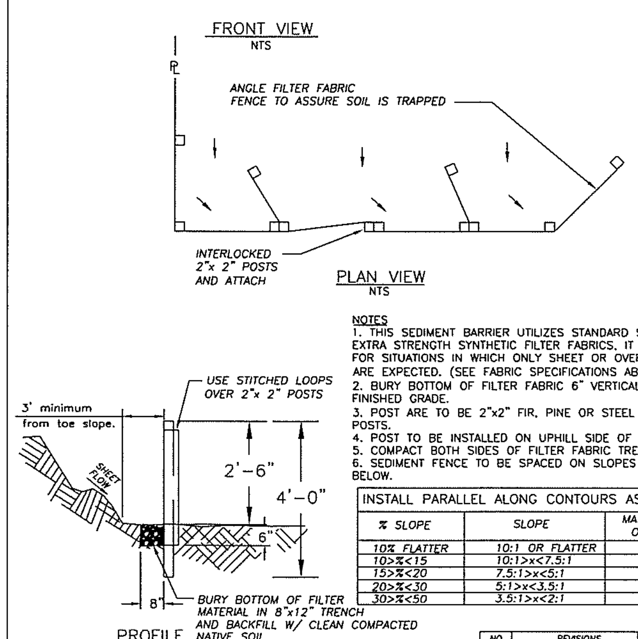

NOTES
1. THIS SEDIMENT BARRIER UTILIZES STANDARD STRENGTH OR EXTRA STRENGTH SYNTHETIC FILTER FABRICS. IT IS DESIGNED FOR SITUATIONS IN WHICH ONLY SHEET OR OVERLAND FLOWS ARE EXPECTED. (SEE FABRIC SPECIFICATIONS ABOVE)
2. BURY BOTTOM OF FILTER FABRIC 6" VERTICALLY BELOW FINISHED GRADE.
3. POST ARE TO BE 2"x2" FIR, PINE OR STEEL FENCE POSTS.
4. POST TO BE INSTALLED ON UPHILL SIDE OF SLOPE.
5. COMPACT BOTH SIDES OF FILTER FABRIC TRENCH.
6. SEDIMENT FENCE TO BE SPACED ON SLOPES PER TABLE BELOW.

INSTALL PARALLEL ALONG CONTOURS AS FOLLOWS		
% SLOPE	SLOPE	MAX. SPACING ON SLOPE
10% FLATTER	10:1 OR FLATTER	300 ft.
10>%<15	10:1>x<7.5:1	150 ft.
15>%<20	7.5:1>x<5:1	100 ft.
20>%<30	5:1>x<3.5:1	50 ft.
30>%<50	3.5:1>x<2:1	25 ft.

NO.	REVISIONS	DATE	BY

DWG: E-4.DWG

Department of Public Works — CLARK COUNTY WASHINGTON — proud past, promising future

STANDARD SEDIMENT FENCE — APPROVED DRAFT — COUNTY ENGINEER — DATE — STANDARD E-4 PLAN No. — DESIGNED SCH — DRAWN SCH — DATE 07/07/03

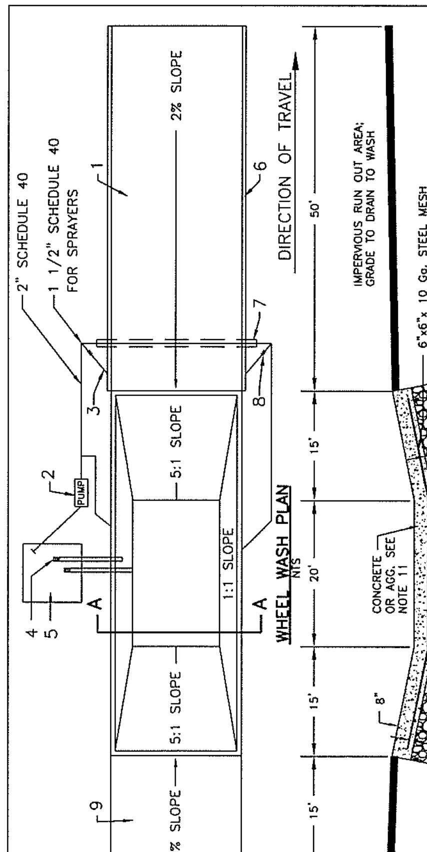

NOTES
1. ASPHALT CONSTRUCTION ENTRANCE, 6" OF ATB.
2. 3" TRASH PUMP WITH FLOATS ON SUCTION HOSE.
3. MIDPOINT SPRAY NOZZLES, IF NEEDED.
4. 6" SEWER PIPE WITH BUTTERFLY VALVES. BOTTOM PIPE IS A DRAIN. LOCATE TOP PIPE'S INVERT 1' ABOVE BOTTOM OF WHEEL WASH.
5. 8'x 8' SUMP WITH 5' OF CATCHMENT. BUILD WITH ABILITY TO CLEAN WITH BACKHOE.
6. ASPHALT CURB ON THE LOW ROAD SIDE TO DIRECT WATER BACK TO POND.
7. 6" SLEEVE UNDER ROAD.
8. BALL VALVES.
9. ATB APRON TO PROTECT FROM SPLASHING WATER.
10. CONTRACTOR TO REMOVE ACCUMULATED SEDIMENT FROM WHEEL WASH; MAY BE PIPED TO AN APPROVED SEDIMENT TRAP.
11. USE GEOTEXTILE FABRIC WITH AGGREGATE FOR A TEMPORARY WHEEL WASH.

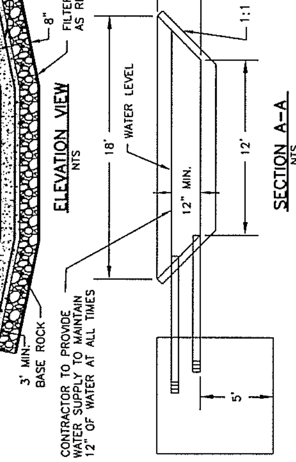

NO.	REVISIONS	DATE	BY

DWG: E-15

Department of Public Works — CLARK COUNTY WASHINGTON — proud past, promising future

WHEEL WASH — APPROVED DRAFT — COUNTY ENGINEER — DATE — STANDARD E-15 PLAN No. — DESIGNED SCH — DRAWN SCH — DATE 08/13/03

STANDARD NOTES FOR EROSION CONTROL PLAN (CONTINUED)

13. All conveyance channels, both temporary and permanent shall be stabilized to prevent erosion of the channel. Stabilization shall extend to areas at outlets and downstream reaches vulnerable to erosion resulting from flow discharging from the channel.

14. If BMP's shown are utilized but are insufficient to prevent sediment from reaching water bodies, adjacent properties, or public rights-of-way; additional BMP's shall be implemented immediately to prevent further encroachment of sediment.

15. Stabilized areas shall be provided for employee parking and storage of construction materials. Erodeable stockpiles of earthen materials, such as topsoil, silty and clayey soils; and landscape materials, shall be covered when not being incorporated in the work. Erosion control BMP's shall be utilized as necessary to prevent sediment laden runoff from leaving or sediment being transported from these areas from vehicle activity.

16. All pollutants other than sediment that occur during construction shall be handled and disposed of in a manner that does not cause contamination of storm water.

17. The Contractor shall keep an inspection log of the condition of the erosion control facilities. Erosion control facilities shall be inspected at least weekly and after each rainfall. The inspection log shall be kept at the project site at a designated location and shall be available for review by the County. An individual that has successfully completed the County's Erosion Control Certification course shall perform inspections and maintain the log.

18. All temporary BMP's shall be removed within 30 days after final site stabilization is achieved. Trapped sediment shall be deposited and stabilized on site. Areas disturbed resulting from removal shall be permanently stabilized.

19. Construction shall not be considered complete and acceptable until all disturbed soil surfaces have been protected from erosion with permanent landscaping, covering with impervious surfaces, restored to original undisturbed condition or permanently stabilized.

20. Vegetated stabilization and landscaping shall be fertilized, watered and maintained to insure that growth of vegetation is established and sustained.

21. During dry weather construction periods the contractor' shall provide project-specific dust control measures that may include: Seeding, Mulching, Matting, Water, Tackifier, or Chemical Soil Stabilizers. The contractor shall maintain the dust control measures through dry weather periods until all disturbed areas have been stabilized. Immediately re-stabilize areas disturbed by contractor's operations or other activities (wind, water, vandalism, etc.).

NOTE:
SIGNIFICANT VARIATION AND DEGREE OF EROSION CONTROL EFFORT IS DICTATED BY WEATHER CONDITIONS. THE DEVELOPER AND CONTRACTOR SHOULD BE PREPARED TO PROVIDE EXTRA EROSION CONTROL PROVISIONS AND EFFORT DURING WINTER AND WET WEATHER CONDITIONS BEYOND THAT NORMALLY REQUIRED DURING SUMMER AND DRY WEATHER CONDITIONS. FINE GRAINED AND UNCONSOLIDATED SOILS ON SLOPING SITES MAY BECOME UNSTABLE WHEN SUBJECT TO EXCESSIVE MOISTURE.

NO.	REVISIONS	DATE	BY

DWG: ECN2.DWG

Department of Public Works — CLARK COUNTY WASHINGTON — proud past, promising future

STANDARD NOTES (CONTINUED) FOR EROSION CONTOL PLAN — APPROVED DRAFT — COUNTY ENGINEER — DATE — STANDARD ECN2 PLAN No. — DESIGNED SCH — DRAWN SCH — DATE 07/07/03

PRELIMINARY

CLARK COUNTY WASHINGTON — proud past, promising future

DESIGN & ENGINEERING DIVISION
DESIGN SECTION

NE 99TH STREET
EROSION CONTROL DETAILS

BRUCE A. KLUG — STATE OF WASHINGTON — 35868 — REGISTERED PROFESSIONAL ENGINEER — EXPIRES: APRIL 7, 2004

CALL 48 HOURS BEFORE YOU DIG
1-800-553-4344
"It's the Law"
NORTHWEST UTILITIES NOTIFICATION CENTER

DESIGNED	BAK
DRAWN	BAK
CRP	330522
HOR.	NA
VERT.	NA
DATE	1/28/04
DWG:	EC3
SHEET X	OF

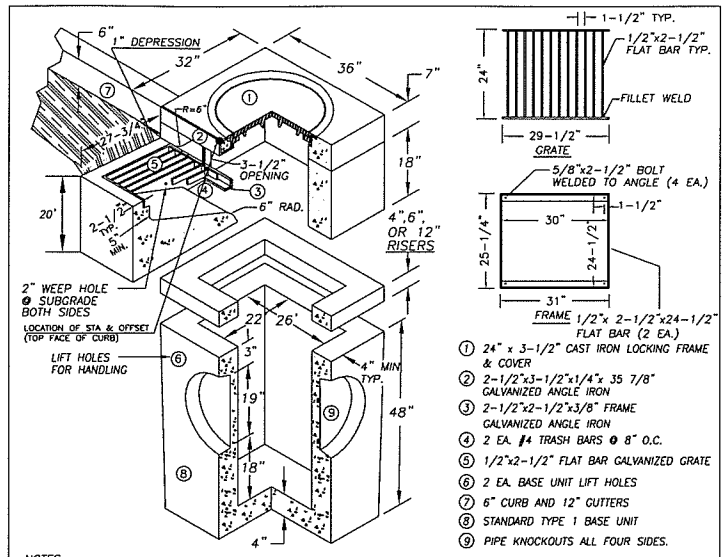

1. 24" x 3-1/2" CAST IRON LOCKING FRAME & COVER
2. 2-1/2"x3-1/2"x1/4"x 35 7/8" GALVANIZED ANGLE IRON
3. 2-1/2"x2-1/2"x3/8" FRAME GALVANIZED ANGLE IRON
4. 2 EA. #4 TRASH BARS @ 8" O.C.
5. 1/2"x2-1/2" FLAT BAR GALVANIZED GRATE
6. 2 EA. BASE UNIT LIFT HOLES
7. 6" CURB AND 12" GUTTERS
8. STANDARD TYPE 1 BASE UNIT
9. PIPE KNOCKOUTS ALL FOUR SIDES.

NOTES

1. COMBINATION CURB INLET TO BE CONSTRUCTED IN ACCORDANCE WITH ASTM C478 & C890 UNLESS SHOWN ON PLANS OR NOTED IN STANDARD SPECIFICATIONS.
2. REINFORCING FOR INLET UNIT, 3 EA. #4 HORZONTAL BARS; REINFORCING FOR TOP UNIT, 2 EA. #3 HORZONTAL BARS; REINFORCING FOR INLET SLOPED BASE, 4x4 MESH.
3. ALL REBAR TO MEET ASTM A615 GRADE 60.
4. AS AN ACCEPTABLE ALTERNATIVE TO REBAR, WELDED WIRE FABRIC HAVING A MIN. AREA OF 0.12 SQAURE INCHES PER FOOT MAY BE USED. WELDED WIRE FABRIC SHALL COMPLY TO ASTM A497. WIRE FABRIC SHALL NOT BE PLACED IN KNOCKOUTS.
5. ALL REINFORCED CAST-IN-PLACE CONCRETE SHALL BE CLASS 4,000.
6 PRECAST BASES SHALL BE FURNISHED WITH CUTOUTS OR KNOCKOUTS. KNOCKOUTS SHALL HAVE A WALL THICKNESS OF 2" MIN. ALL PIPE SHALL BE INSTALLED IN FACTORY PROVIDED KNOCKOUTS. UNUSED KNOCKOUTS NEED NOT BE GROUTED IF WALL IS LEFT INTACT.
7. KNOCKOUTS OR CUTOUT HOLE SIZE IS EQUAL TO PIPE OUTER DIAM. PLUS INLET WALL THICKNESS.
8. ROUND KNOCKOUTS MAY BE ON ALL 4 SIDES WITH MAX. DIAM. OF 17".
9. THE MAX. DEPTH FROM THE FINISHED GRADE TO THE PIPE INVERT IS 5'-0".
10. ANY PROTUDING ENDS OF PIPES SHALL BE TRIMMED FLUSH WITH THE INSIDE WALLS AND GROUTED TO THE SATISFACTION OF ENGINEER.
11. GRATE TO HAVE 1" DEPRESSION AT GUTTER INLET WITH GUTTER TO BE TAPERED DOWN TO INLET.
12. INSTALL REMOVABLE APWA TYPE 60A TRAP OR EQUAL. SEE STD. PLAN D2.1.
13. CONTRACTOR SHALL HAVE THE OPTION OF FURNISHING PRECAST OR CAST-IN-PLACE INLET STRUCTURES. UNLESS SPECIFIED.

NO.	REVISIONS	DATE	BY

DWG: D3-0.DWG

Department of Public Works
CLARK COUNTY WASHINGTON
proud past, promising future

STANDARD TYPE 1 COMBINATION CURB INLET

APPROVED DRAFT
COUNTY ENGINEER DATE

STANDARD D3.0
PLAN No.
DESIGNED SCH
DRAWN SCH
DATE 09/09/02

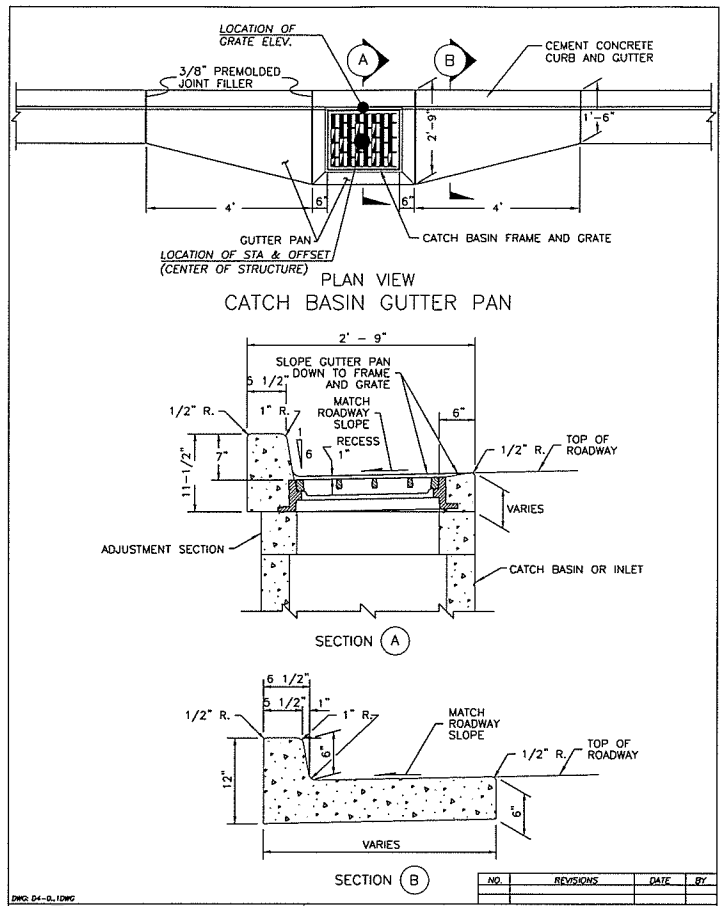

NO.	REVISIONS	DATE	BY

DWG: D4-0.DWG

Department of Public Works
CLARK COUNTY WASHINGTON
proud past, promising future

CATCH BASIN GUTTER PAN

APPROVED DRAFT
COUNTY ENGINEER DATE

STANDARD D4-1
PLAN No.
DESIGNED SCH
DRAWN SCH
DATE 07/07/03

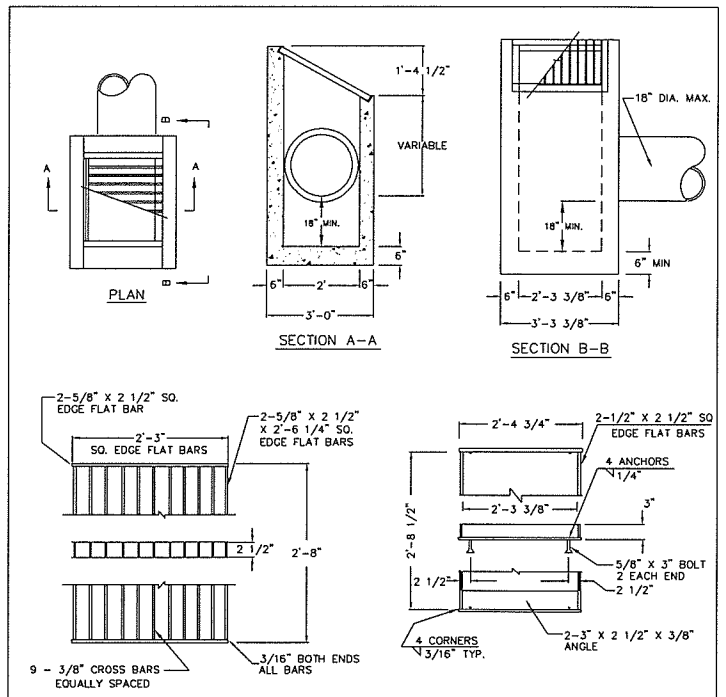

NOTES:

1. DITCH INLET CONSTRUCTION IN ACCORDANCE WITH ASTM C-478
2. CATCH BASIN, FRAME, AND GRATES SHALL BE FLAT BAR STEEL OR APPROVED EQUAL.
3. INSIDE FRAME DIMENSIONS: 2'-3 3/8"x 2'-8 1/2"".
4. 3/8" CROSS BARS SHALL BE FLUSH WITH THE GRATE SURFACE AND MAY BE FILLET WELDED, RESISTANCE WELDED OR ELECTROFORGED TO BEARING BARS.

NO.	REVISIONS	DATE	BY

DWG: D5.DWG

Department of Public Works
CLARK COUNTY WASHINGTON
proud past, promising future

DITCH INLET

APPROVED DRAFT
COUNTY ENGINEER DATE

STANDARD D6
PLAN No.
DESIGNED SCH
DRAWN SCH
DATE 09/17/02

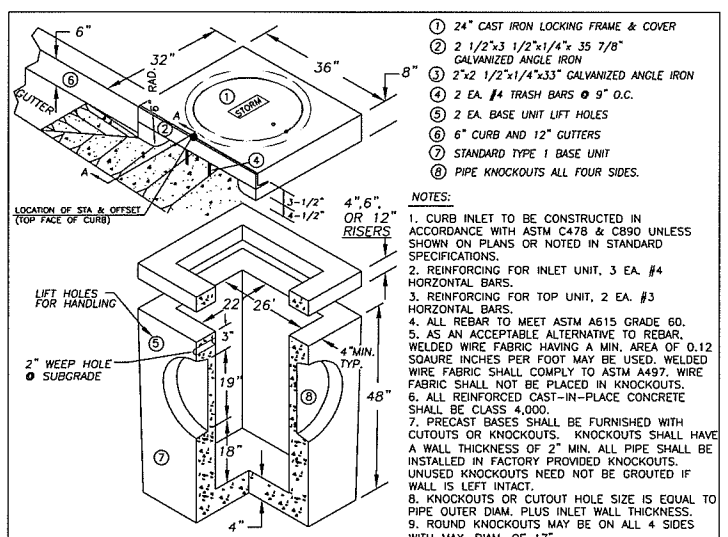

1. 24" CAST IRON LOCKING FRAME & COVER
2. 2 1/2"x3 1/2"x1/4"x 35 7/8" GALVANIZED ANGLE IRON
3. 2"x2 1/2"x1/4"x33" GALVANIZED ANGLE IRON
4. 2 EA. #4 TRASH BARS @ 9" O.C.
5. 2 EA. BASE UNIT LIFT HOLES
6. 6" CURB AND 12" GUTTERS
7. STANDARD TYPE 1 BASE UNIT
8. PIPE KNOCKOUTS ALL FOUR SIDES.

NOTES:

1. CURB INLET TO BE CONSTRUCTED IN ACCORDANCE WITH ASTM C478 & C890 UNLESS SHOWN ON PLANS OR NOTED IN STANDARD SPECIFICATIONS.
2. REINFORCING FOR INLET UNIT, 3 EA. #4 HORZONTAL BARS.
3. REINFORCING FOR TOP UNIT, 2 EA. #3 HORZONTAL BARS.
4. ALL REBAR TO MEET ASTM A615 GRADE 60.
5. AS AN ACCEPTABLE ALTERNATIVE TO REBAR, WELDED WIRE FABRIC HAVING A MIN. AREA OF 0.12 SQAURE INCHES PER FOOT MAY BE USED. WELDED WIRE FABRIC SHALL COMPLY TO ASTM A497. WIRE FABRIC SHALL NOT BE PLACED IN KNOCKOUTS.
6. ALL REINFORCED CAST-IN-PLACE CONCRETE SHALL BE CLASS 4,000.
7. PRECAST BASES SHALL BE FURNISHED WITH CUTOUTS OR KNOCKOUTS. KNOCKOUTS SHALL HAVE A WALL THICKNESS OF 2" MIN. ALL PIPE SHALL BE INSTALLED IN FACTORY PROVIDED KNOCKOUTS. UNUSED KNOCKOUTS NEED NOT BE GROUTED IF WALL IS LEFT INTACT.
8. KNOCKOUTS OR CUTOUT HOLE SIZE IS EQUAL TO PIPE OUTER DIAM. PLUS INLET WALL THICKNESS.
9. ROUND KNOCKOUTS MAY BE ON ALL 4 SIDES WITH MAX. DIAM. OF 17".
10. THE MAX. DEPTH FROM THE FINISHED GRADE TO THE PIPE INVERT IS 5'-0".
11. ANY PROTUDING ENDS OF PIPES SHALL BE TRIMMED FLUSH WITH THE INSIDE WALLS AND GROUTED TO THE SATISFACTION OF ENGINEER.
12. GUTTER IS TAPERED DOWN TO INLET.
13. INSTALL REMOVABLE APWA TYPE 60A TRAP OR EQUAL. SEE STD. PLAN D2.1.
14. CONTRACTOR SHALL HAVE THE OPTION OF FURNISHING PRECAST OR CAST-IN-PLACE INLET STRUCTURES, UNLESS SPECIFIED.

TYPE 1 CURB INLET

NTS

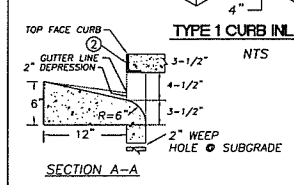

SECTION A-A

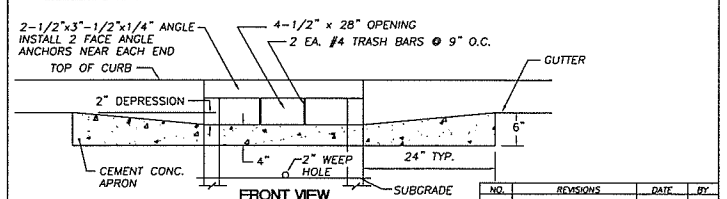

FRONT VIEW

NO.	REVISIONS	DATE	BY

DWG: D2-0.DWG

Department of Public Works
CLARK COUNTY WASHINGTON
proud past, promising future

STANDARD TYPE 1 CURB INLET

APPROVED DRAFT
COUNTY ENGINEER DATE

STANDARD D2.0
PLAN No.
DESIGNED SCH
DRAWN SCH
DATE 09/09/02

PRELIMINARY

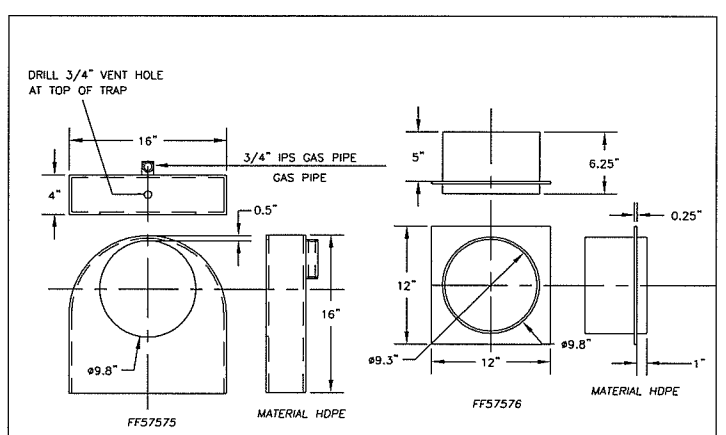

LOW PROFILE ELBOW

NTS

ELBOW INSERT

NTS

ZYMARK BRAND OR EQUIVALENT

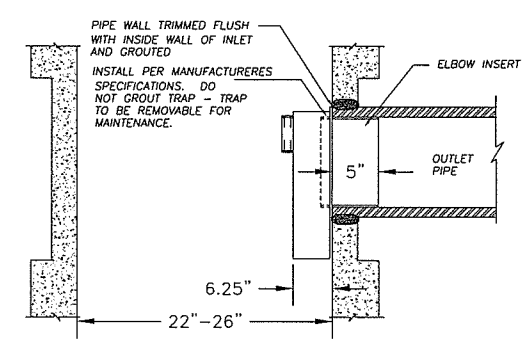

NO.	REVISIONS	DATE	BY

DWG: D2-1.DWG

Department of Public Works
CLARK COUNTY WASHINGTON
proud past, promising future

CATCH BASIN OUTLET PIPE TRAP

APPROVED DRAFT
COUNTY ENGINEER DATE

STANDARD D2.1
PLAN No.
DESIGNED SCH
DRAWN SCH
DATE 09/23/02

DESIGNED	BAK
DRAWN	BAK
CRP	330522
HOR.	NA
VERT.	NA
DATE	1/28/04
DWG:	D01
SHEET X	OF

CALL 48 HOURS BEFORE YOU DIG 1-800-553-4344 "It's the Law" NORTHWEST UTILITIES NOTIFICATION CENTER

JOSEPH A. VELIC STATE OF WASHINGTON 21585 REGISTERED PROFESSIONAL ENGINEER
EXPIRES APRIL 7, 2005

DESIGN & ENGINEERING DIVISION
DESIGN SECTION

NE 99TH STREET
DRAINAGE DETAILS

proud past, promising future
CLARK COUNTY WASHINGTON

N:\CIP\PROJECTS\330522-NE99thSt-117To137\DESIGN\DWGS\99D01-2.dwg, D01, 1/28/2004 4:25:49 PM, begleyk

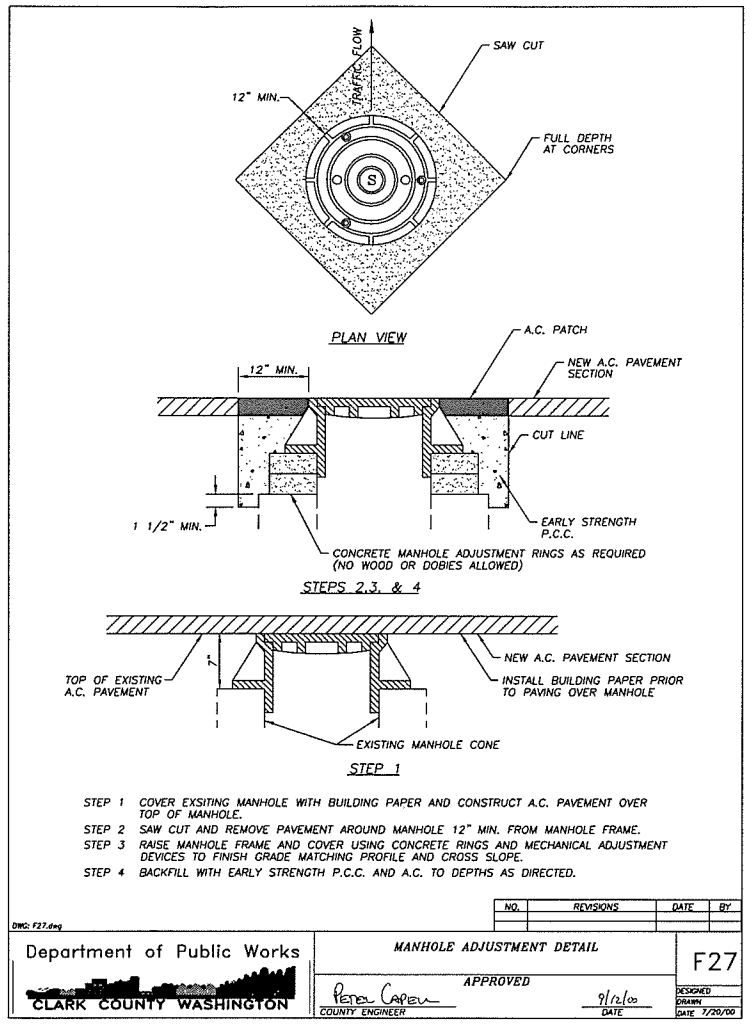

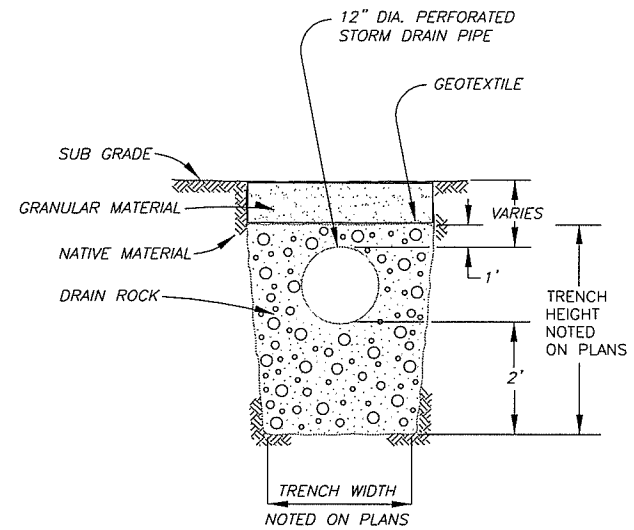

UNDERDRAIN PIPE DETAIL

NTS

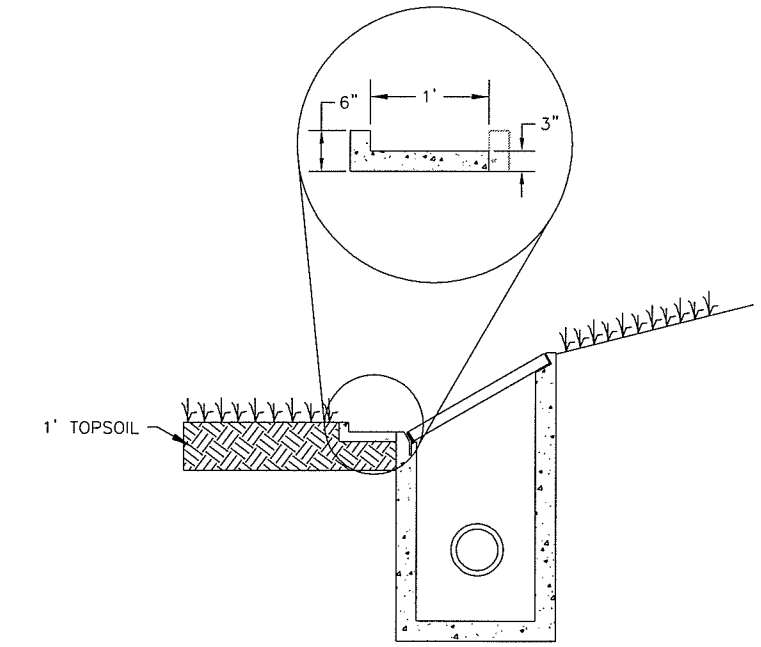

SWALE OUTLET DETAIL

NTS

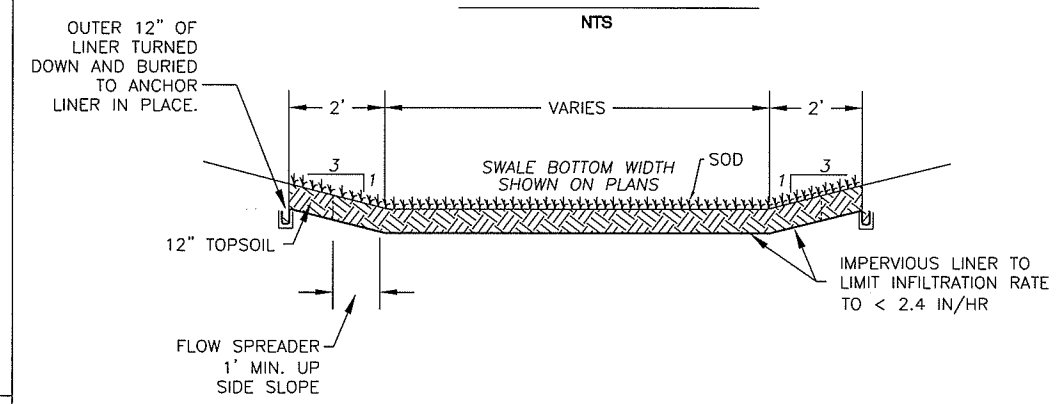

BIOFILTRATION SWALE

NTS

NOTES

1. TOP SOIL TO BE TYPE A. (INCL IN PAYMENT OF SWALE).
2. INSTALL SOD ON SWALE BOTTOM AND A MINIMUM 2' ON EACH SIDE
3. SWALE VEGETATION TO BE WELL ESTABLISHED PRIOR TO PAVING.
4. SEED MIX FOR BIOFILTRATION SWALE

PERENNIAL RYEGRASS	20%
KENTUCKY BLUEGRASS	30%
TALL FESCUE, ALTA FESCUE	30%
RED FESCUE	20%

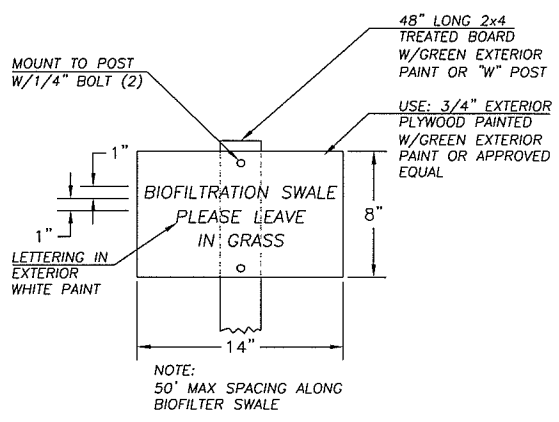

BIOFILTRATION SWALE PROTECTION SIGN

NTS

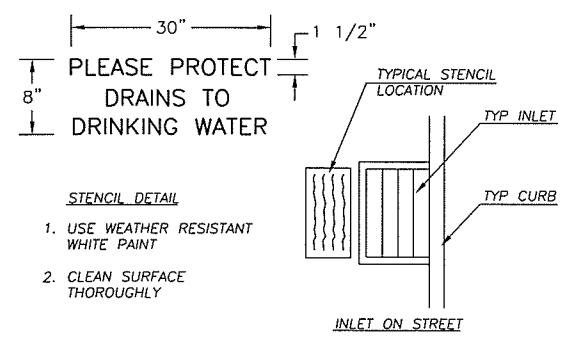

INLET STENCIL DETAIL

NTS

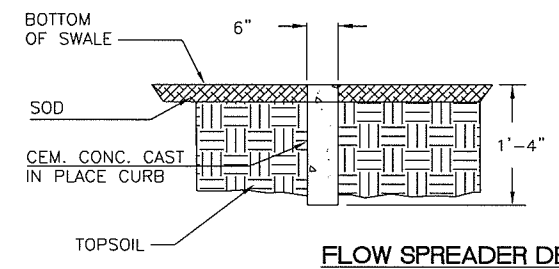

FLOW SPREADER DETAIL

NOTES:

1. POUR SPREADER LEVEL AND FLUSH WITH SWALE BOTTOM TO PROVIDE UNIFORM DISTRIBUTION OF FLOW OVER THE TOP THE SPREADER.
2. EMBED SPREADER 1' INTO SIDESLOPES

PRELIMINARY

DESIGNED	BAK
DRAWN	BAK
CRP	330522
HOR.	NA
VERT.	NA
DATE	1/28/04
DWG.	D02
SHEET	X OF

CALL 48 HOURS BEFORE YOU DIG 1-800-553-4344 "It's the Law" NORTHWEST UTILITIES NOTIFICATION CENTER

JOSEPH A. VILLAS STATE OF WASHINGTON 38266 REGISTERED PROFESSIONAL ENGINEER EXPIRES APRIL 7, 2005

DESIGN & ENGINEERING DIVISION
DESIGN SECTION

NE 99TH STREET DRAINAGE DETAILS

proud past, promising future
CLARK COUNTY WASHINGTON

N:\CIP\PROJECTS\330522-NE99thSt-117To137\DESIGN\DWGS\99D01-2.dwg, DO2, 1/28/2004 4:26:04 PM, begleyk

SIDEWALK DETAIL (F12)

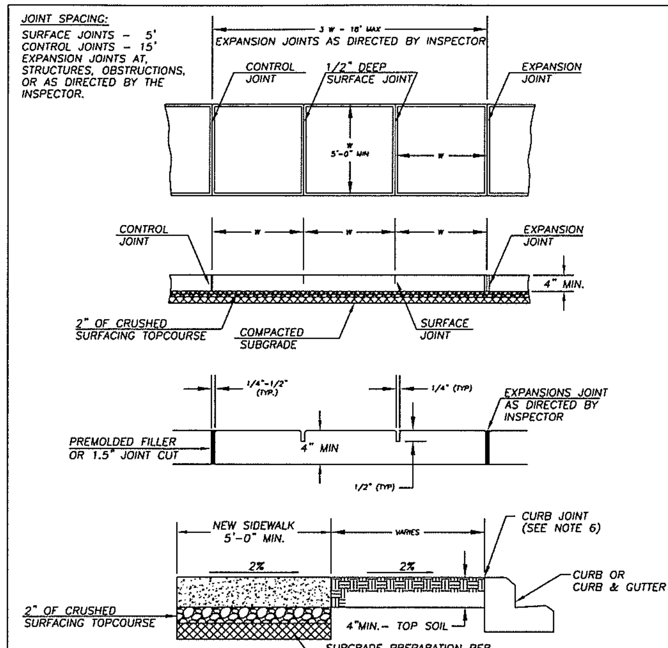

NOTES:

1. CONCRETE SHALL BE 3,000 PSI MIN. (CLASS 3000), 3 1/2" SLUMP (MAX.)
2. FINISH SHALL BE MEDIUM BROOM PERPENDICULAR TO PEDESTRIAN TRAFFIC UNLESS OTHERWISE DIRECTED.
3. ALL EXISTING EDGES SHALL BE SAWCUT.
4. NO FILLER REQUIRED FOR SURFACE JOINTS.
5. ALL JOINTS AND EDGES SHALL BE FINISHED WITH 1/4" RADIUS EDGER (3" SMOOTH EACH SIDE)
6. FOR SIDEWALKS ADJACENT TO THE CURB AND POURED AT THE SAME TIME AS THE CURB, THE JOINT BETWEEN THEM SHALL BE A TROWELED JOINT WITH A MIN. 1/2" RADIUS.

NO.	REVISIONS	DATE	BY
1	CHANGE SUBGRADE &	03/28/02	KB
2	2" BASE AGG. & NOTES	10/07/02	SCH

Department of Public Works — CLARK COUNTY WASHINGTON — proud past, promising future

SIDEWALK DETAIL — APPROVED DRAFT — COUNTY ENGINEER — DATE — STANDARD F12 — PLAN No. — DESIGNED DB — DRAWN KB — DATE 10/08/02

DETAIL – TYPE 1 CEMENT CONCRETE APPROACH (F14)

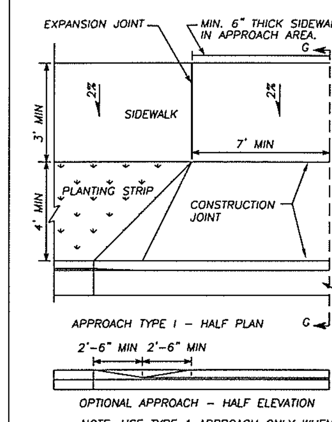

NOTES:

1. A MINIMUM 3' WIDE ACCESSIBLE ROUTE SHALL BE MAINTAINED IN ALL PEDESTRIAN ACCESSIBLE AREAS.
2. CONTRACTION POINTS SHALL BE PLACED ALONG SIDEWALKS IN ACCORD WITH SIDEWALK DETAIL. ALL JOINTS SHALL BE CLEANED AND EDGED.
3. CHANGES IN LEVEL UP TO 1/4" MAY BE VERTICAL AND WITHOUT EDGE TREATMENT. CHANGES IN LEVEL BETWEEN 1/4" AND 1/2" SHALL BE BEVELED WITH A SLOPE NO GREATER THAN 2:1.
4. CEMENT CONCRETE APPROACHES SHALL BE CONSTRUCTED OF AIR-ENTRAINED CLASS 3000 AND MAY BE POURED INTEGRAL WITH CURB.
5. EXISTING CURB, GUTTER, AND SIDEWALK TO BE SAWCUT AND REMOVED FOR INSTALLATION OF APPROACH.
6. COMMERCIAL DRIVEWAY REQUIRES REINFORCING STEEL (6"x6" 10 GA WIRE MESH) MIN. 3" COVER.
7. 3" DEPTH 3/4"-0 CRUSHED AGGREGATE BASE COMPACTED TO 95% OF MAX. DRY DENSITY.
8. SUBGRADE PREPARATION PER WSDOT STD. SPEC. 2-06.3(1).

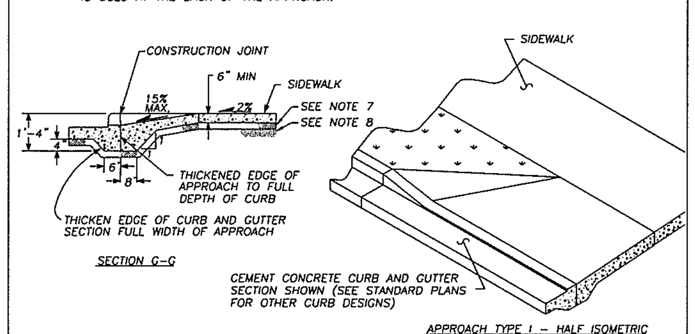

NO.	REVISIONS	DATE	BY
1	NOTE #6, 7, 8	10/09/02	SCH

Department of Public Works — CLARK COUNTY WASHINGTON — proud past, promising future

DETAIL – TYPE 1 CEMENT CONCRETE APPROACH — APPROVED DRAFT — COUNTY ENGINEER — DATE — F14 — DESIGNED DB — DRAWN KB — DATE 7/24/00

CEMENT CONCRETE APPROACH DETAIL – TYPE 2 (F15)

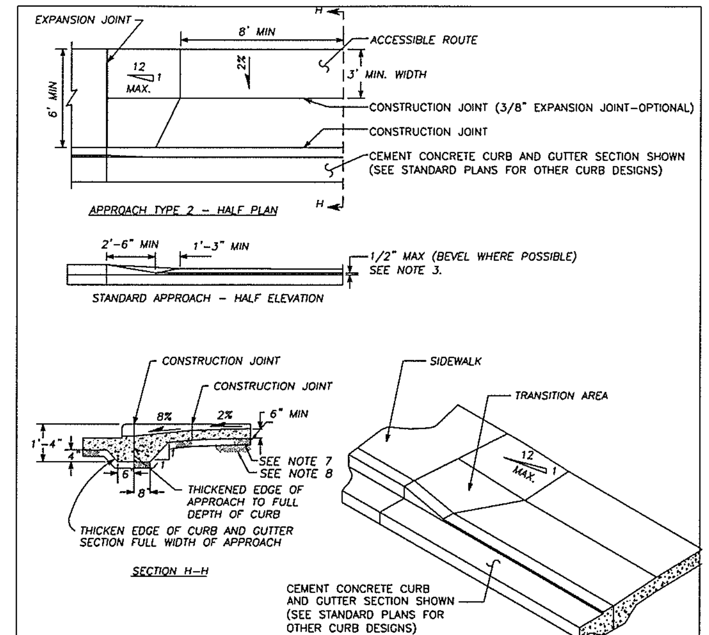

NOTES:

1. A MINIMUM 3' WIDE ACCESSIBLE ROUTE SHALL BE MAINTAINED IN ALL PEDESTRIAN ACCESSIBLE AREAS.
2. CONTRACTION JOINTS SHALL BE PLACED ALONG SIDEWALKS IN ACCORD WITH SIDEWALK DETAIL. ALL JOINTS SHALL BE CLEANED AND EDGED.
3. CHANGES IN LEVEL UP TO 1/4" MAY BE VERTICAL AND WITHOUT EDGE TREATMENT. CHANGES IN LEVEL BETWEEN 1/4" AND 1/2" SHALL BE BEVELED WITH A SLOPE NO GREATER THAN 2:1.
4. CEMENT CONCRETE APPROACHES SHALL BE CONSTRUCTED OF AIR-ENTRAINED CONCRETE CLASS 3000 AND MAY BE POURED INTEGRAL WITH CURB.
5. EXISTING CURB, GUTTER AND SIDEWALK TO BE SAWCUT AND REMOVED FOR INSTALLATION OF APPROACH.
6. COMMERCIAL DRIVEWAY REQUIRES REINFORCING STEEL (6"x6" 10 GA WIRE MESH) MIN. 3" COVER
7. 3" DEPTH 3/4"-0 CRUSHED AGGREGATE BASE COMPACTED TO 95% OF MAX. DRY DENSITY.
8. SUBGRADE PREPARATION PER WSDOT STD. SPEC. 2-06.3(1).

Department of Public Works — CLARK COUNTY WASHINGTON — proud past, promising future

CEMENT CONCRETE APPROACH DETAIL – TYPE 2 — APPROVED DRAFT — COUNTY ENGINEER — DATE — F15 — DATE 7/24/00

OPEN CUT UTILITY TRENCH BACKFILL DETAIL (COLLECTOR OR ARTERIAL)

SURFACING:

1. All A.C.P. shall be saw cut to provide a straight, clean edge prior to paving.
2. The cut line shall be one continuous straight line from the outer excavation limits of manhole, valve box, etc. to manhole, valve box, etc.
3. Pave with an 0.5 ft. minimum compacted depth A.C.P., or match existing or design section, whichever is greater.
4. Lifts for A.C.P. (Class A) shall be 0.15 ft. minimum and 0.35 ft. maximum for non-surface lifts (0.25' maximum for surface lift); the temperature shall be 250 degree minimum, 350 degree maximum, compacted to 92% of the theoretical maximum.
5. All joints shall be tacked, sealed and sanded.
6. Trench shall be plated until paved.
7. For longitudinal installation, full lane width including turn lanes restoration shall be required or as directed by Clark County. For transverse installation refer to surfacing restoration of detail U6. See Section 12.20A.120.C.

BASE COURSE:

1. 0.80 ft. minimum depth (1-1/4" minus) C.S.B.C. (W.S.D.O.T. approved material).
2. Compacted to 95% of maximum density. See trench zone.
3. Equivalent depth of A.T.B. may be substituted.
4. For transverse or diagonal trenches in existing roadway pavement, CDF (as defined in the standard specifications section 2-09.3(1)E) will be used for a minimum of 3' in depth or from 6" above the top of the pipe to the bottom of full pavement section which ever is less.

TRENCH ZONE:

1. Granular backfill as approved by local agency or W.S.D.O.T. specifications for granular backfill. Compacted to 95% of maximum density in the trench zone using Method C compaction as per Section 2-03.3(14)C.
2. Native material may be used if approved prior to construction by Clark County.
3. Trench zone width –– see below.

PIPE ZONE:

1. Pipe zone material as specified by utility owner, and shall conform to section 9-03.12(3) WSDOT Specs.
2. 1.0 ft. max. from top of the pipe. 6" from top of pipe when CDF backfill used.

CONDITIONS:

1. A copy of the permit and requirements shall be on the job site at all times.
2. The permit holder shall be responsible for all restoration and maintenance of ditches, shoulders, driveways, landscaping, etc.
3. Call Clark County at 397-2446 twenty-four hours prior to commencing work.

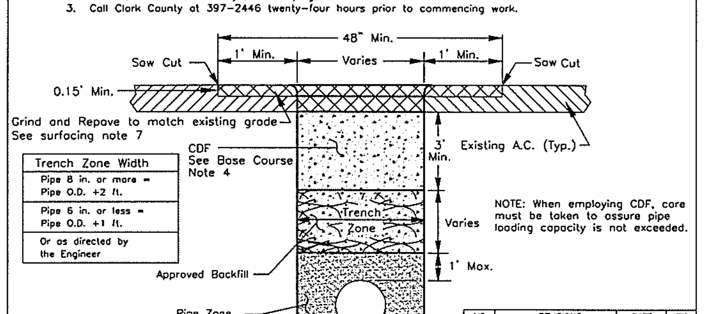

Trench Zone Width
Pipe 8 in. or more = Pipe O.D. +2 ft.
Pipe 6 in. or less = Pipe O.D. +1 ft.
Or as directed by the Engineer

NO.	REVISIONS	DATE	BY
2	ILLUSTRATIVE CHANGE	07/10/01	DK
3	Notes: 6 Del., Rev. 2	12/07/02	SCH

Department of Public Works — CLARK COUNTY WASHINGTON — proud past, promising future

OPEN CUT UTILITY TRENCH BACKFILL DETAIL COLLECTOR OR ARTERIAL ROADWAY — APPROVED — COUNTY ENGINEER — 7/20/01 DATE — STANDARD U1 — PLAN No. — DATE 04/25/03

ROADWAY SHOULDER INCLUDES LAWN AND LANDSCAPE

SHOULDER ROCK:

1. 0.50 ft. minimum depth (1 1/4" minus) crushed rock. (Clark County Approved Material).
2. Compacted to 95% of maximum density. See trench zone.
3. Rock shall extend from E.O.P. to the back of trench at approx. .05 Ft./Ft. slope.

LAWN & LANDSCAPE AREAS:

1. A County approved top soil shall be placed 0.50 Ft. in depth.
2. Area to be restored to match existing.

TRENCH ZONE:

Where the distance from E.O.T. to E.O.P. is less than or equal to the depth of the trench; these conditions shall apply:

1. Granular backfill as approved by local agency or W.S.D.O.T. specifications for granular backfill. Compacted to 95% of maximum density in the trench zone using Method C compaction as per Section 2-03.3 (14)C.
2. Native material may be used if approved prior to construction.
3. Trench zone width –– see below.
4. Shoulder rock or landscaped sections as applicable.

PIPE ZONE:

1. Pipe zone material as specified by utility owner, and shall conform to section 9-03.12(3) WSDOT Specs.
2. 1.0 ft. max. from top of the pipe.

CONDITIONS:

1. A copy of the permit and requirements shall be on the job site at all times.
2. The permit holder shall be responsible for all restoration and maintence of ditches, shoulders, driveways, landscaping, ect.
3. Call Clark County at 397-2446 twenty-four hours prior to commencing work.

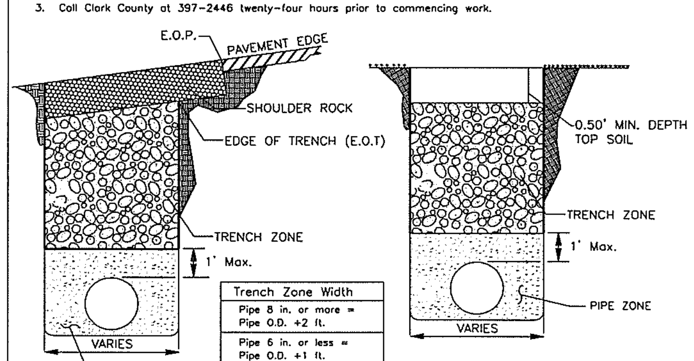

Trench Zone Width
Pipe 8 in. or more = Pipe O.D. +2 ft.
Pipe 6 in. or less = Pipe O.D. +1 ft.
Or as directed by the Engineer

NO.	REVISIONS	DATE	BY
1	NOTE, FIG. F	05/02/01	DS
2	Pipe Zone Notes	10/07/02	SCH

Department of Public Works — CLARK COUNTY WASHINGTON — proud past, promising future

ROADWAY SHOULDER INCLUDES LAWN & LANDSCAPE — APPROVED — COUNTY ENGINEER — 5/4/01 DATE — STANDARD U5 — PLAN No. — DATE 04/25/03

PRELIMINARY

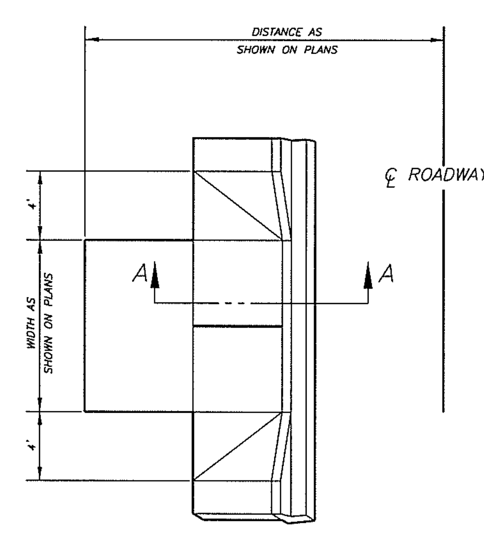

TYPICAL DRIVEWAY ENTRANCE

NTS

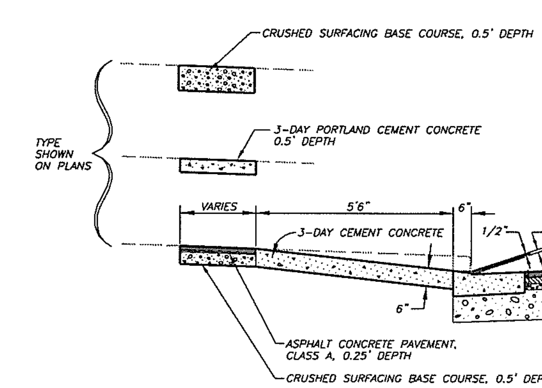

SECTION A-A

NTS

CLARK COUNTY WASHINGTON — proud past, promising future

DESIGN & ENGINEERING DIVISION
DESIGN SECTION

NE 99TH STREET
ROADWAY DETAILS

BRUCE A. KLUG — STATE OF WASHINGTON — 39868 REGISTERED PROFESSIONAL ENGINEER — EXPIRES: APRIL 7, 2004

CALL 48 HOURS BEFORE YOU DIG
1-800-553-4344
"It's the Low"
NORTHWEST UTILITIES NOTIFICATION CENTER

DESIGNED	BAK
DRAWN	KB
CRP	330522
HOR.	NA
VERT.	NA
DATE	1/28/04
DWG:	D03
SHEET X	OF

NEW CONSTRUCTION
FOR USE WITH SIDEWALKS LOCATED ANYWHERE IN THE RIGHT-OF-WAY

NOTES:

RAMPS TO BE POURED SEPARATELY FROM SIDEWALK.

CROSSWALKS TO BE CENTERED ON SIGNAL POLE TO POLE CENTERLINES. CURB RAMP TO BE CENTERED WITHIN CROSSWALK.

SIDEWALK SLOPE TO BE 2% MAXIMUM RADIALLY AROUND CORNER SECTION. SINGLE RAMPS CAN BE INSTALLED.

TRAFFIC SIGNAL POLE LOCATED ON RP-RP LINE AT 11' IN FROM CURB FACE.

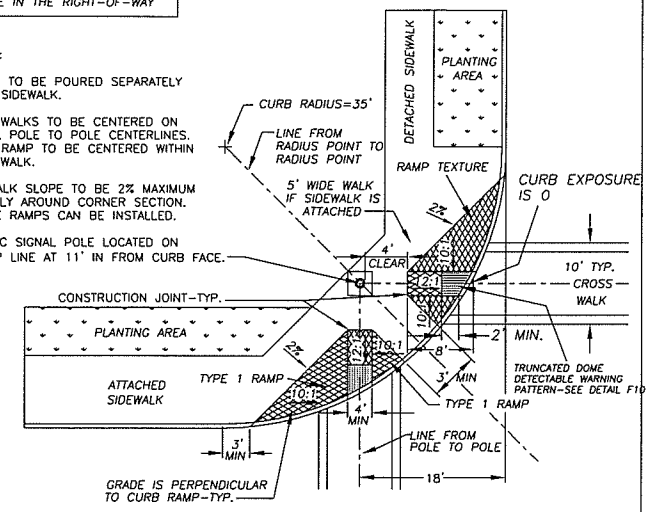

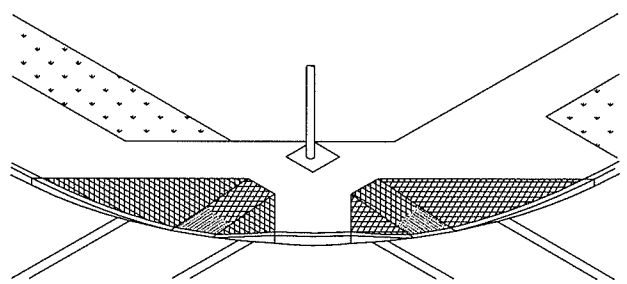

NO.	REVISIONS	DATE	BY
1	TRUNCATED DOMES	6/14/03	SCH

DWG: F1.DWG

Department of Public Works
CLARK COUNTY WASHINGTON
proud past, promising future

TYPE 1 RAMP

APPROVED

Peter Capell
COUNTY ENGINEER

8/22/00
DATE

F1

DESIGNED DB
DRAWN KB
DATE 7/24/00

NOTES:

EXISTING CURB, GUTTER, AND SIDEWALK TO BE SAWCUT AND REMOVED FOR INSTALLATION OF NEW RAMP.

RAMPS TO BE POURED SEPARATELY FROM SIDEWALK.

6" BACK CURB OUTSIDE OF SIDEWALK (CAN BE INSTALLED INSIDE IF R.O.W. LINE IS BACK OF SIDEWALK). BACK CURB IS ST. BARRIER CURB.

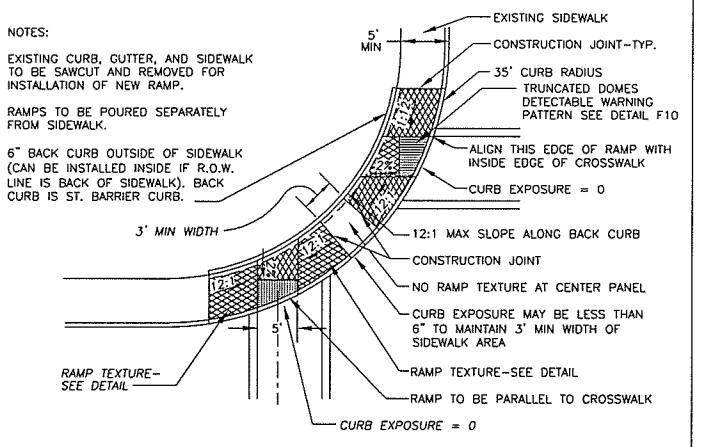

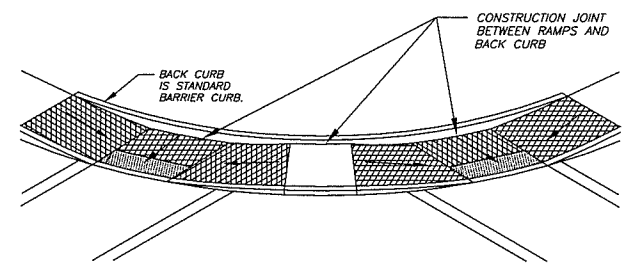

THIS TYPE OF RAMP IS ONLY TO BE USED IN EXISTING RESTRICTED RIGHT-OF-WAY AREAS, DOUBLE RAMP SHOWN-SINGLE RAMP MAY BE USED AT SOME INSTALLATIONS.

NO.	REVISIONS	DATE	BY
1	TRUNCATED DOMES	6/14/03	SCH

DWG: F2.DWG

Department of Public Works
CLARK COUNTY WASHINGTON
proud past, promising future

TYPE 2 RAMP - DOUBLE

APPROVED

Peter Capell
COUNTY ENGINEER

8/22/00
DATE

F2

DESIGNED DB
DRAWN KB
DATE 7/24/00

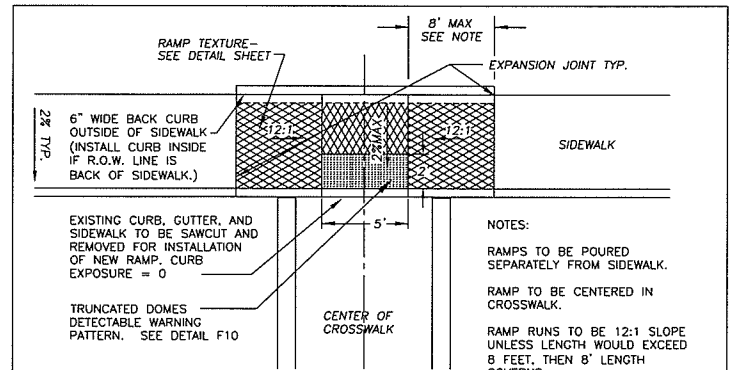

NOTES:

RAMPS TO BE POURED SEPARATELY FROM SIDEWALK.

RAMP TO BE CENTERED IN CROSSWALK.

RAMP RUNS TO BE 12:1 SLOPE UNLESS LENGTH WOULD EXCEED 8 FEET, THEN 8' LENGTH GOVERNS.

BACK CURB IS STANDARD BARRIER CURB.

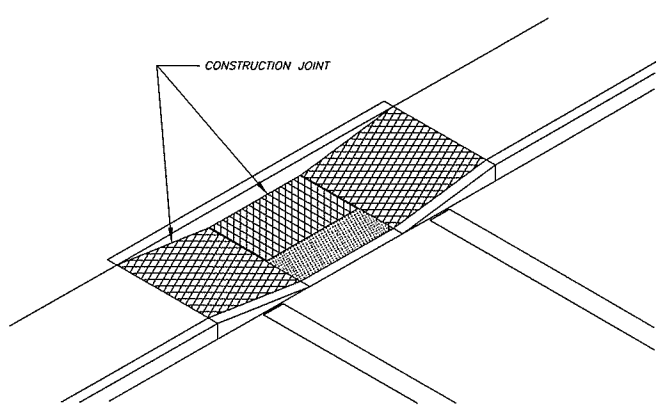

NO.	REVISIONS	DATE	BY
1	TRUNCATED DOME PATTERN	6/15/03	SCH

DWG: F3.DWG

Department of Public Works
CLARK COUNTY WASHINGTON
proud past, promising future

TYPE 3 RAMP

APPROVED

Peter Capell
COUNTY ENGINEER

8/22/00
DATE

F3

DESIGNED DB
DRAWN KB
DATE 7/24/00

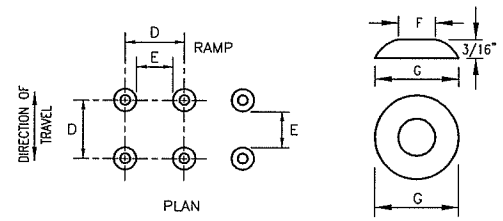

	MIN.	MAX.
D	1 5/8"	2 3/8"
E	5/8"	1 1/2"
F	7/16"	3/4"
G	7/8"	1 7/16"

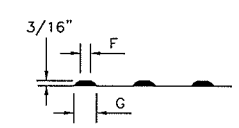

ELEVATION

TRUNCATED DOMES (SEE NOTE 2)
DETECTABLE WARNING
PATTERN DETAIL

NOTES

1. AVOID PLACING DRAINAGE STRUCTURES, JUNCTION BOXES OR OTHER OBSTRUCTIONS IN FRONT OF RAMP ACCESS AREA.

2. THE DETECTABLE WARNING PATTERNS CAN BE CREATED BY ANY MEANS THAT WILL ACHIEVE THE TRUNCATED DOME DIMENSIONS AND SPACING SHOWN.

3. PLACE TRUNCATED DOME DETECTABLE WARNING TEXTURE IN THE LOWER 24" OF THE THROAT OF THE RAMP ONLY. ARRANGE DOMES USING IN-LINE PATTERN ONLY AS SHOWN. COLOR OF TEXTURE SHALL BE SAFETY YELLOW, SEE COUNTY INSPECTOR FOR SPECIFICATIONS.

4. FOR CONSTRUCTION OF SIDEWALK RAMPS OUTSIDE OF PUBLIC RIGHT-OF-WAY, CHECK WITH STATE BUILDING CODES.

NO.	REVISIONS	DATE	BY

DWG: F10.DWG

Department of Public Works
CLARK COUNTY WASHINGTON
proud past, promising future

TRUNCATED DOME DETECTABLE WARNING PATTERN

APPROVED

COUNTY ENGINEER

DATE

STANDARD
F10

PLAN No.
DESIGNED SCH
DRAWN SCH
DATE 8/15/03

PRELIMINARY

DESIGNED BAK
DRAWN KB
CRP 330522
HOR. NA
VERT. NA
DATE 1/28/04
DWG: D04
SHEET X OF

CALL 48 HOURS BEFORE YOU DIG
1-800-553-4344
"It's the Law"
NORTHWEST UTILITIES NOTIFICATION CENTER

STATE OF WASHINGTON
PAUL A. ALES
29808
REGISTERED PROFESSIONAL ENGINEER
EXPIRES APRIL 7, 2004

DESIGN & ENGINEERING DIVISION
DESIGN SECTION

NE 99TH STREET
ROADWAY DETAILS

proud past, promising future
CLARK COUNTY
WASHINGTON

N:\CIP\PROJECTS\330522-NE99thSt-117To137\DESIGN\DWGS\99D03-4.dwg, DO4, 1/28/2004 4:27:02 PM, begleyk

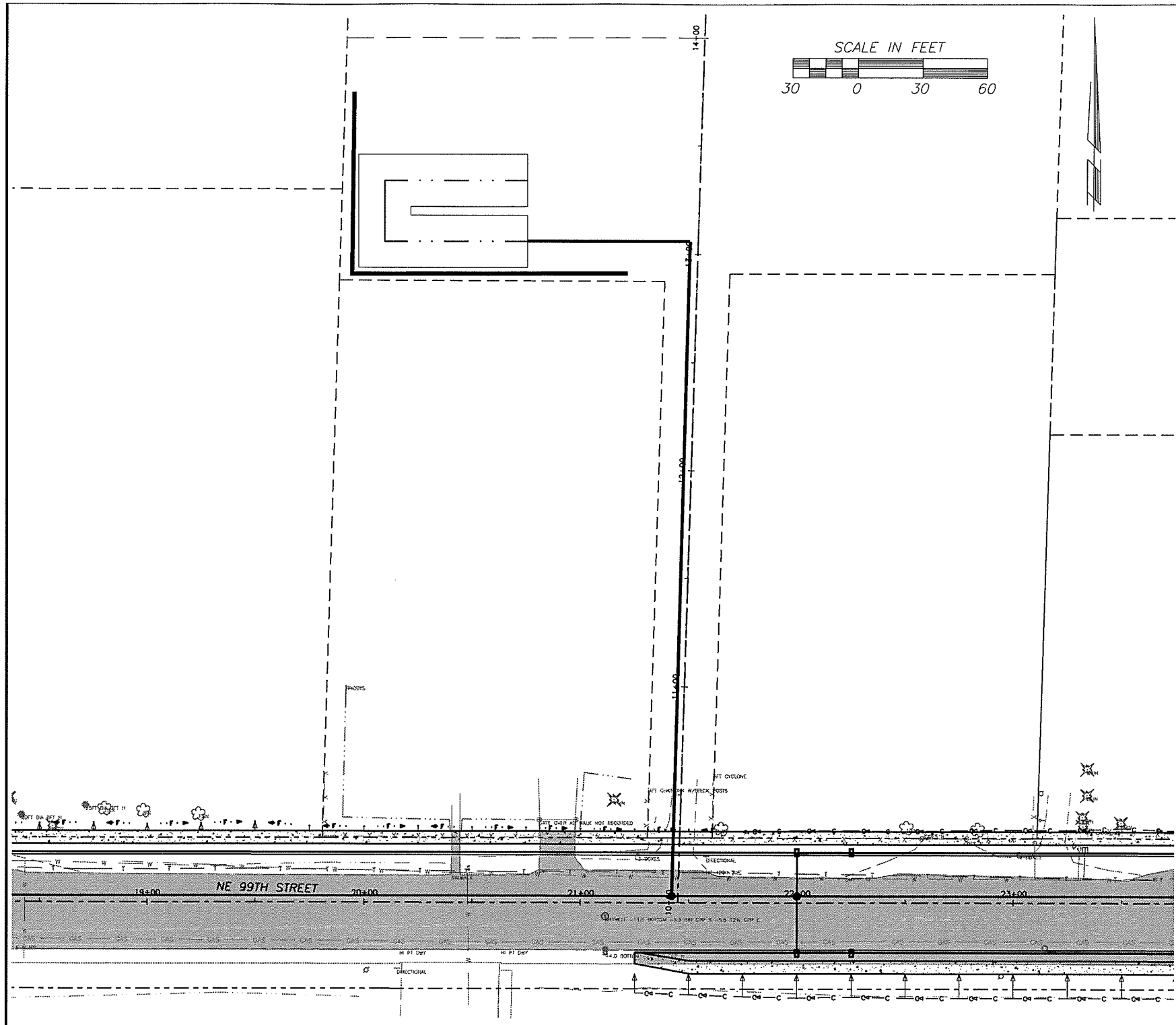

SEE DWG XX FOR ADDITIONAL DRAINAGE INFORMATION

NOTES:
ALL DISTURBED AREAS OF STORMWATER FACILITY TO BE SODDED.

BIOFILTRATION SWALE ALIGNMENT

ITEM	CONTROL POINT	STATION	NORTHING	EASTING	DIRECTION	DISTANCE	DELTA ANGLE	TANGENT	RADIUS	ARC LENGTH	CHORD LENGTH
L1	BOP	0+00	132353.83	1119212.22	S 87°20'54" E	60.00					
	PC	0+60	132351.06	1119272.16							
	RADIUS	N/A	132341.57	1119271.72			88°13'36"	9.21	9.50	14.63	13.23
C2	PI	0+69	132350.63	1119281.36							
L3	PT	0+75	132341.42	1119281.21	S 00°52'42" W	4.00					
	PC	0+79	132337.42	1119281.15							
	RADIUS	N/A	132337.57	1119271.65			91°46'24"	9.80	9.50	15.22	13.64
C4	PI	0+88	132327.62	1119281.00							
L5	PT	0+94	132328.08	1119271.21	N 87°20'54" W	52.15					
	EOP	1+46	132330.49	1119219.12							

BIOFILTRATION SWALE BERM ALIGNMENT

ITEM	CONTROL POINT	STATION	NORTHING	EASTING	DIRECTION	DISTANCE
L6	BOP	0+00	132343.26	1119214.82	S 87°20'54" E	54.00
	EOP	0+54	132340.76	1119268.76		

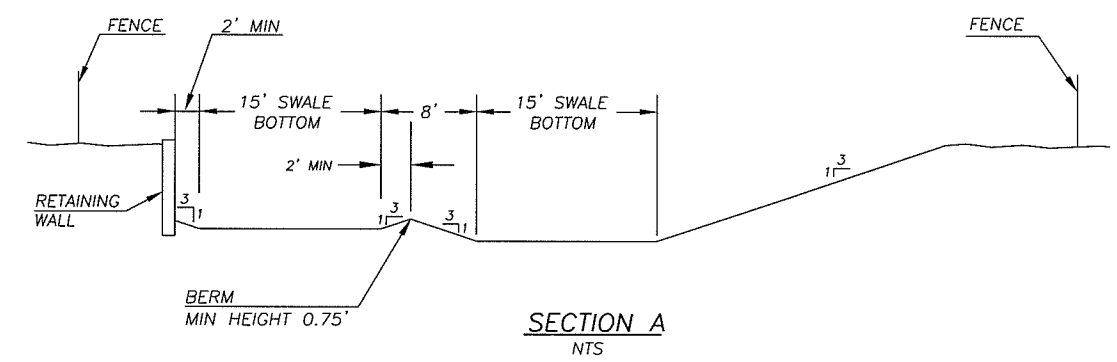

SECTION A
NTS

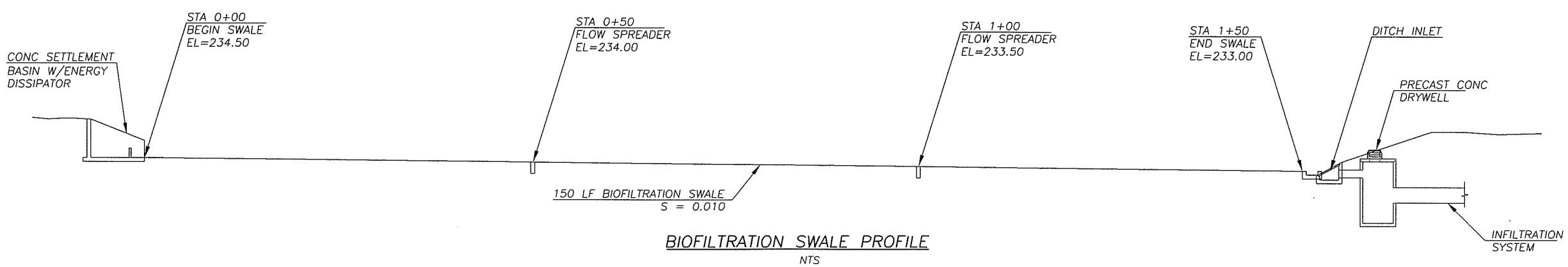

BIOFILTRATION SWALE PROFILE
NTS

DESIGNED	BK
DRAWN	RK
CRP	330522
HOR.	NA
VERT.	NA
DATE	1/28/04
DWG:	SWF1
SHEET	OF

CALL 48 HOURS BEFORE YOU DIG
1-800-553-4344
"It's the Law"
NORTHWEST UTILITIES NOTIFICATION CENTER

STATE OF WASHINGTON
JAMES A. KLEI
35868
REGISTERED PROFESSIONAL ENGINEER
EXPIRES APRIL 7, 2005

DESIGN & ENGINEERING DIVISION
DESIGN SECTION

NE 99TH STREET
STORMWATER FACILITY #1

proud past, promising future
CLARK COUNTY
WASHINGTON

N:\CIP\PROJECTS\330522-NE99thSt-117To137\DESIGN\DWGS\99SWF1.dwg, SWF NO. 1, 1/28/2004 4:30:10 PM, begleyk

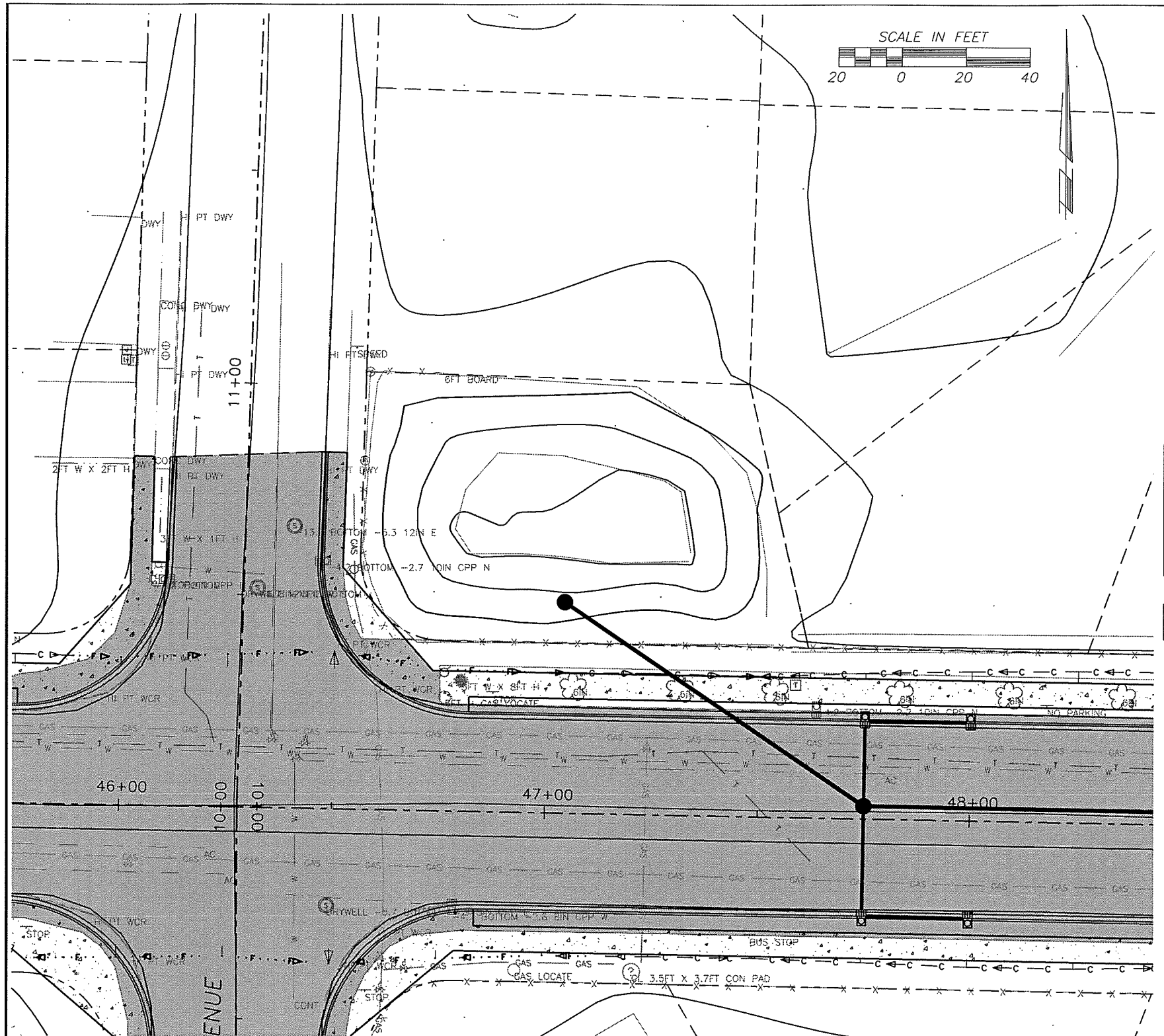

SEE DWG XX FOR ADDITIONAL DRAINAGE INFORMATION

NOTES:
ALL DISTURBED AREAS OF STORMWATER FACILITY TO BE SODDED.

BIOFILTRATION SWALE ALIGNMENT

ITEM	CONTROL POINT	STATION	NORTHING	EASTING	DIRECTION	DISTANCE	DELTA ANGLE	TANGENT	RADIUS	ARC LENGTH	CHORD LENGTH
L1	BOP	0+00	132353.83	1119212.22	S 87°20'54" E	60.00					
	PC	0+60	132351.06	1119272.16							
	RADIUS	N/A	132341.57	1119271.72			88°13'36"	9.21	9.50	14.63	13.23
C2	PI	0+69	132350.63	1119281.36							
L3	PT	0+75	132341.42	1119281.21	S 00°52'42" W	4.00					
	PC	0+79	132337.42	1119281.15							
	RADIUS	N/A	132337.57	1119271.65			91°46'24"	9.80	9.50	15.22	13.64
C4	PI	0+88	132327.62	1119281.00							
L5	PT	0+94	132328.08	1119271.21	N 87°20'54" W	52.15					
	EOP	1+46	132330.49	1119219.12							

BIOFILTRATION SWALE BERM ALIGNMENT

ITEM	CONTROL POINT	STATION	NORTHING	EASTING	DIRECTION	DISTANCE
L6	BOP	0+00	132343.26	1119214.82	S 87°20'54" E	54.00
	EOP	0+54	132340.76	1119268.76		

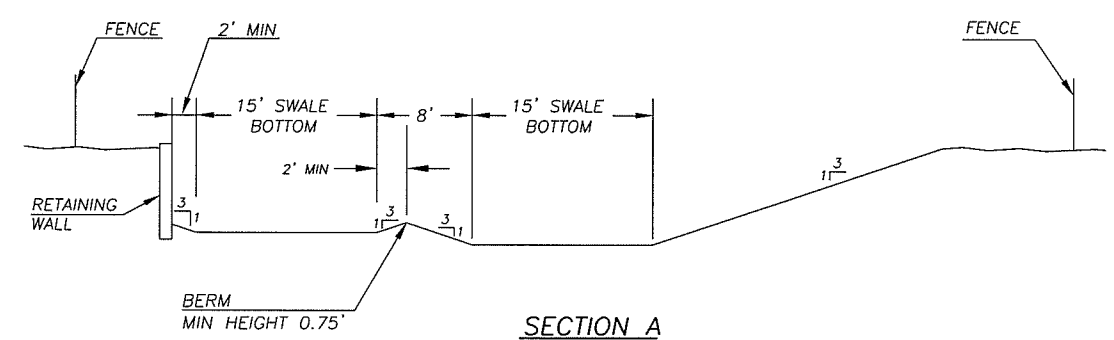

SECTION A
NTS

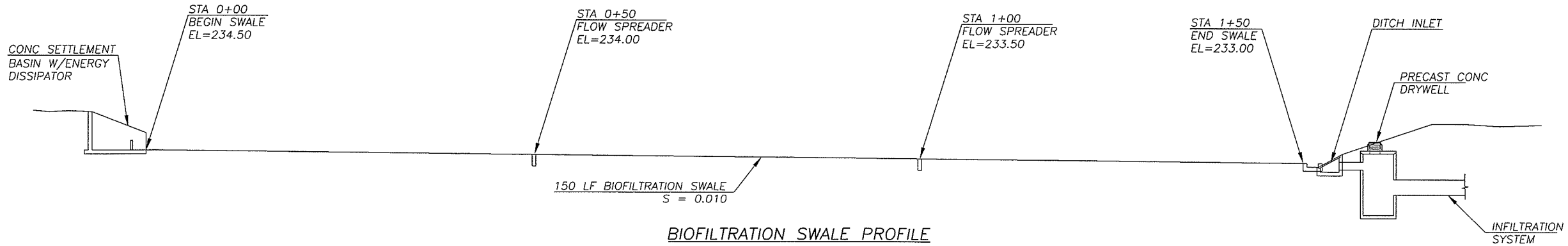

BIOFILTRATION SWALE PROFILE
NTS

DESIGNED	BK
DRAWN	RK
CRP	330522
HOR.	NA
VERT.	NA
DATE	1/28/04
DWG:	SWF2
SHEET	OF

CALL 48 HOURS BEFORE YOU DIG 1-800-553-4344 "It's the Law" NORTHWEST UTILITIES NOTIFICATION CENTER

DEE A. PAULS STATE OF WASHINGTON 38668 REGISTERED PROFESSIONAL ENGINEER
EXPIRES APRIL 7, 2005

DESIGN & ENGINEERING DIVISION
DESIGN SECTION

NE 99TH STREET
STORMWATER FACILITY #2

proud past, promising future
CLARK COUNTY WASHINGTON

N:\CIP\PROJECTS\330522-NE99thSt-117To137\DESIGN\DWGS\99SWF2.dwg, SWF NO. 1, 1/28/2004 4:30:46 PM, begleyk

NOTE: ALL STATIONS AND OFFSETS ARE FROM NE 99TH STREET UNLESS NOTED OTHERWISE.

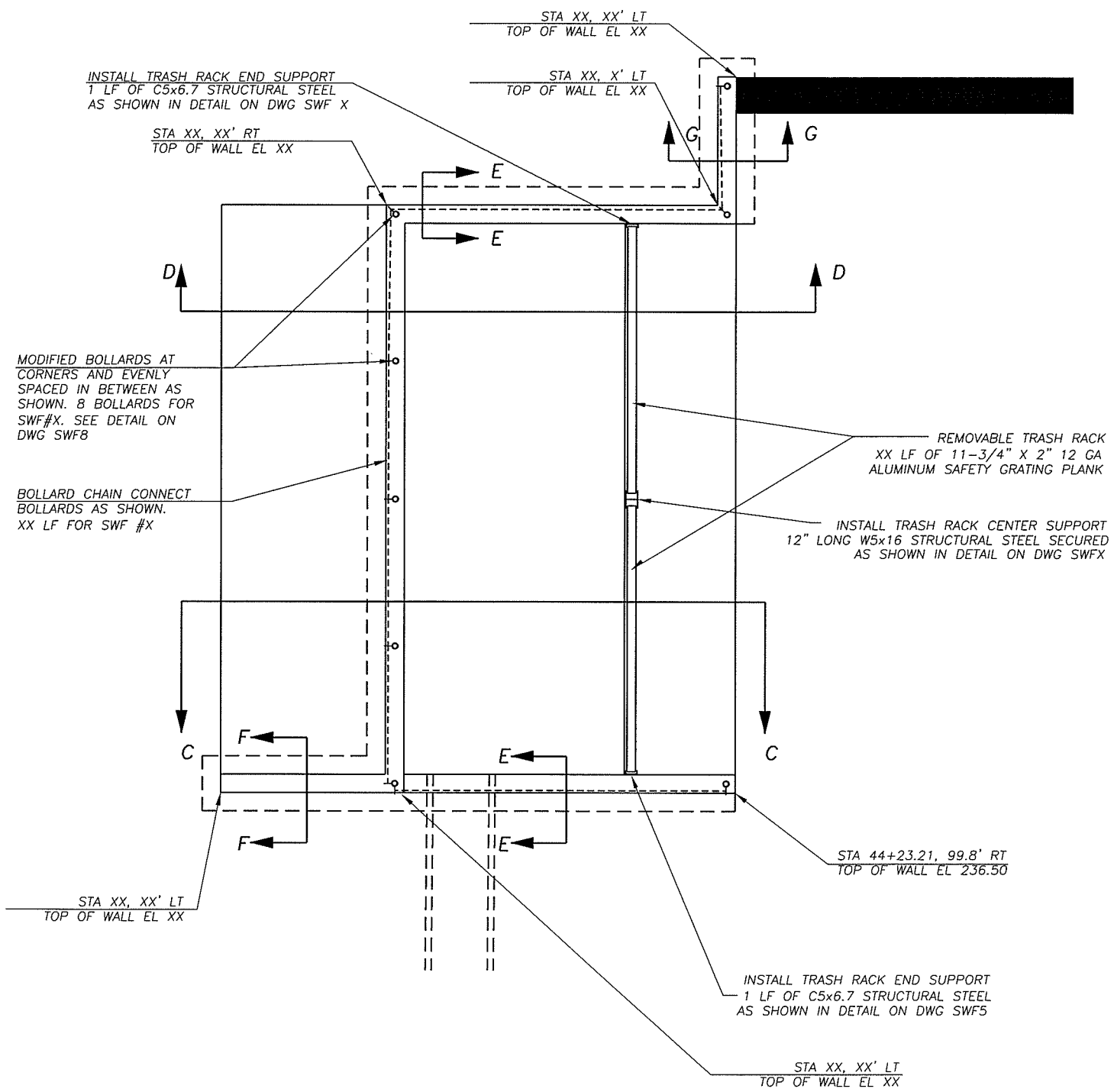

CONC SETTLEMENT BASIN
W/ENERGY DISSIPATOR DETAIL

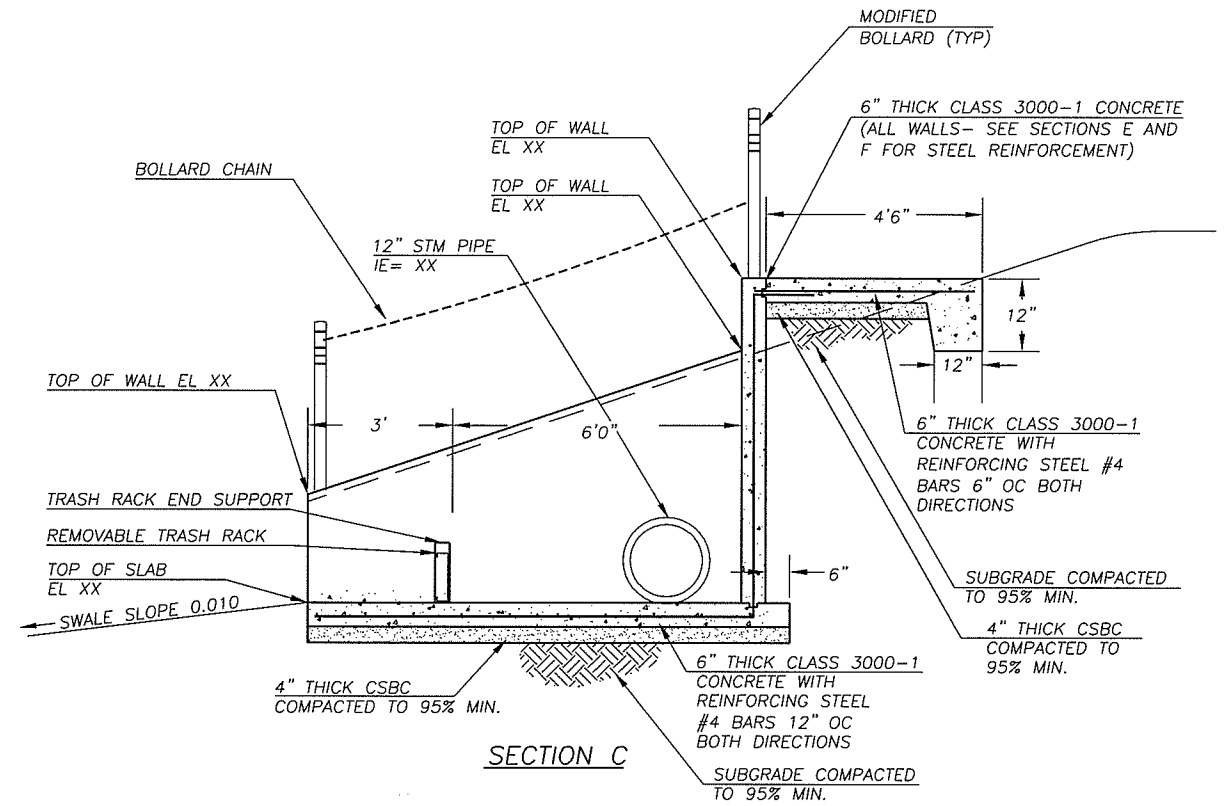

SECTION C

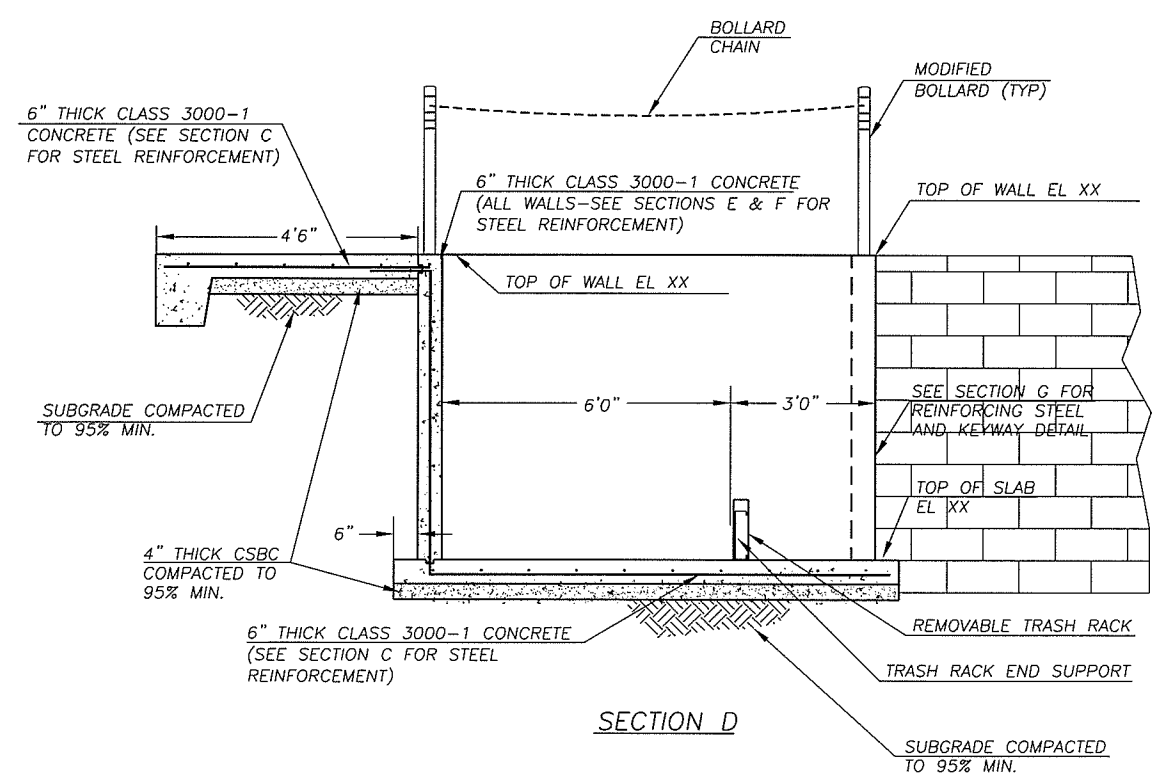

SECTION D

DESIGNED	BK
DRAWN	RK
CRP	330522
HOR.	NA
VERT.	NA
DATE	1/28/04
DWG:	SWF3
SHEET	OF

CALL 48 HOURS BEFORE YOU DIG
1-800-553-4344
"It's the Law"
NORTHWEST UTILITIES NOTIFICATION CENTER

STATE OF WASHINGTON
DAVID A. ALLEN
29858
REGISTERED PROFESSIONAL ENGINEER
EXPIRES: APRIL 7, 2005

DESIGN & ENGINEERING DIVISION
DESIGN SECTION

NE 99TH STREET
STORMWATER FACILITY DETAILS

proud past, promising future
CLARK COUNTY
WASHINGTON

N:\CIP\PROJECTS\330522-NE99thSt-117To137\DESIGN\DWGS\99SWF3-4.dwg, SWF3, 1/28/2004 4:31:18 PM, begleyk

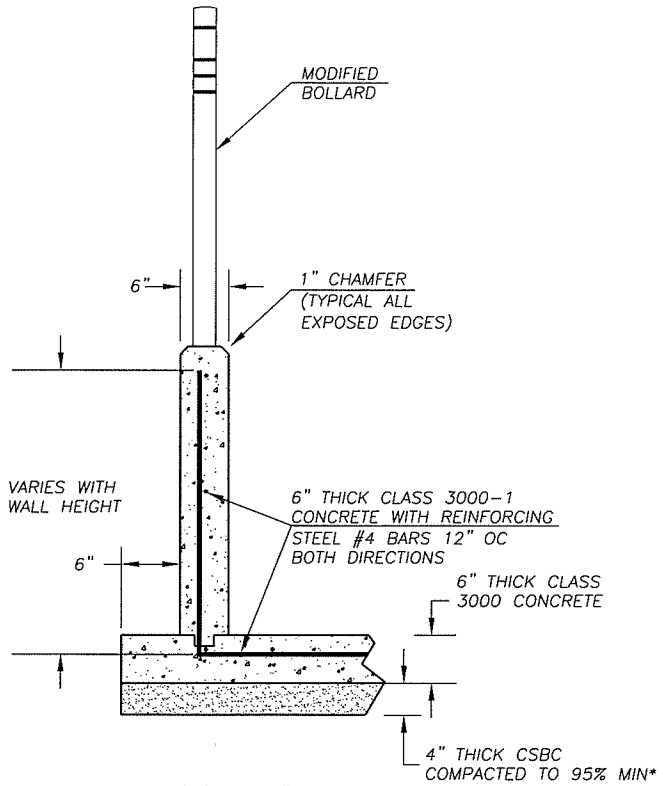

SECTION E

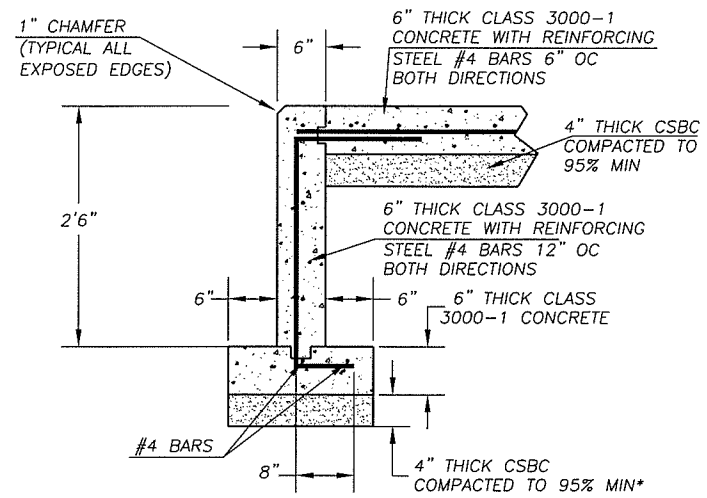

SECTION F

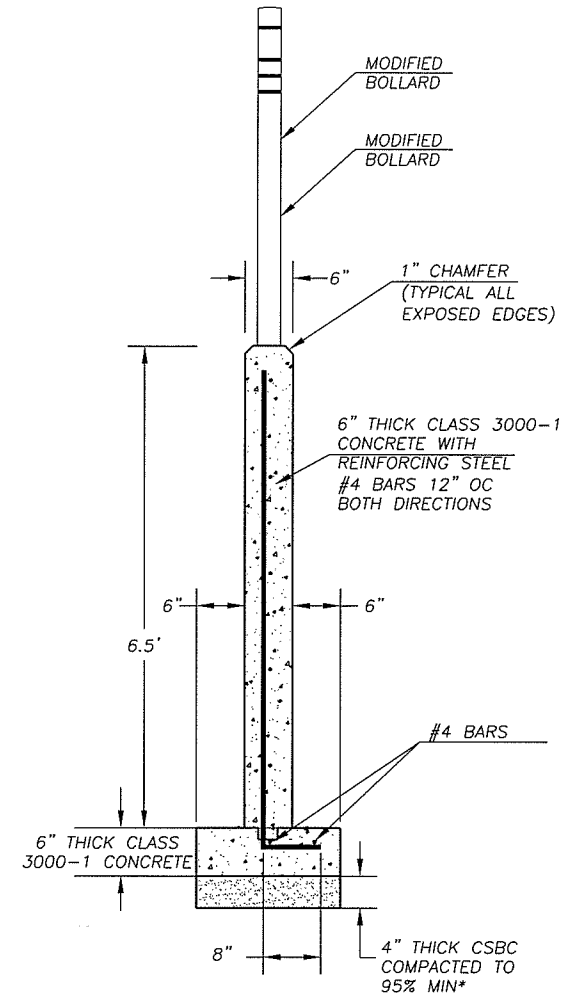

SECTION G

* SUBGRADE BELOW CSBC COMPACTED TO 95% MIN.

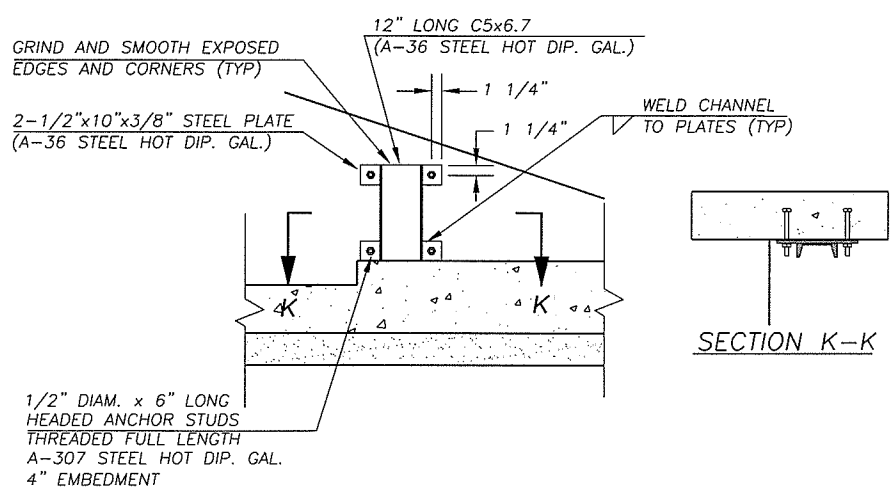

SECTION K-K

TRASH RACK END SUPPORT

1"=1'

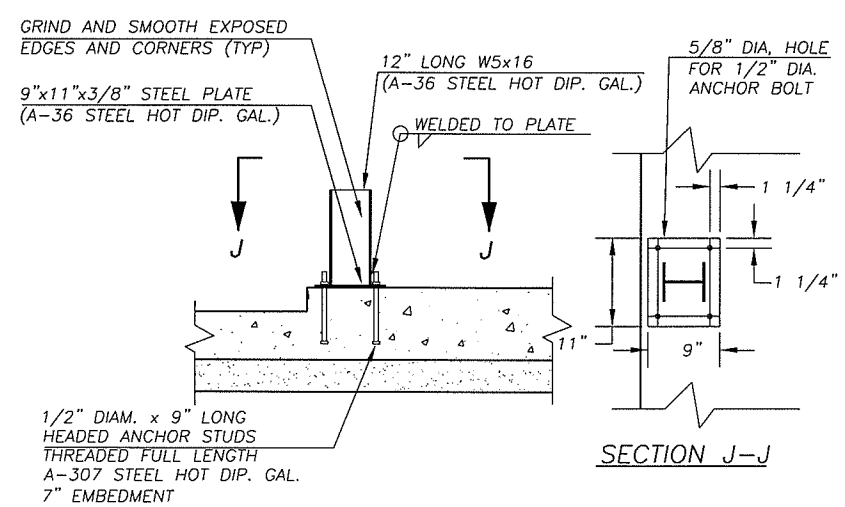

SECTION J-J

TRASH RACK CENTER SUPPORT

1"=1'

DESIGNED	BK
DRAWN	RK
CRP	330522
HOR.	NA
VERT.	NA
DATE	1/28/04
DWG:	SWF4
SHEET	OF

CALL 48 HOURS BEFORE YOU DIG 1-800-553-4344 "It's the Law" NORTHWEST UTILITIES NOTIFICATION CENTER

STATE OF WASHINGTON 23868 REGISTERED PROFESSIONAL ENGINEER BRUCE A. KAMS EXPIRES APRIL 7, 2005

DESIGN & ENGINEERING DIVISION
DESIGN SECTION

NE 99TH STREET
STORMWATER FACILITY DETAILS

proud past, promising future

CLARK COUNTY WASHINGTON

N:\CIP\PROJECTS\330522-NE99thSt-117To137\DESIGN\DWGS\99SWF3-4.dwg, SWF4, 1/28/2004 4:31:32 PM, begleyk

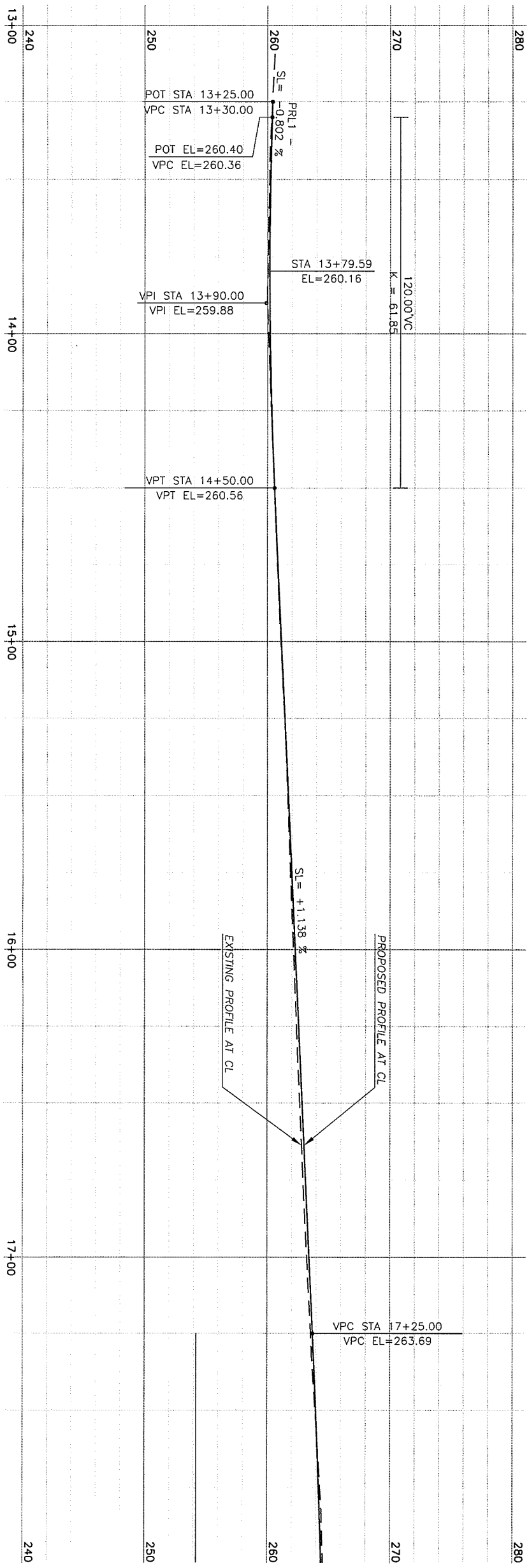

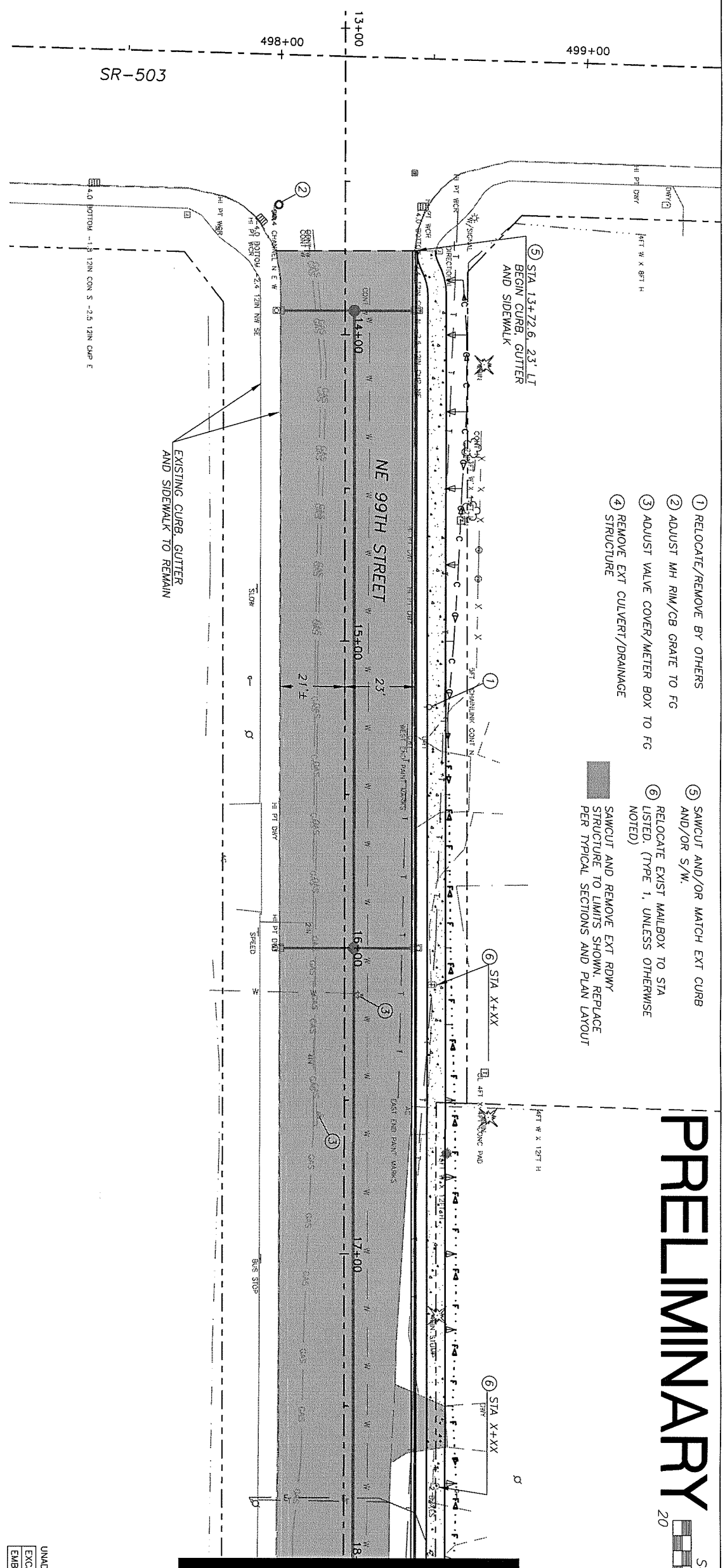

UNADJUSTED EARTHWORK QUANTITIES

EXCAVATION	X	C.Y.
EMBANKMENT	X	C.Y.

CLARK COUNTY WASHINGTON
proud past, promising future

DESIGN & ENGINEERING DIVISION
DESIGN SECTION

NE 99TH STREET
PLAN & PROFILE STA BOP TO 18+00

BRUCE A. KLUG, STATE OF WASHINGTON, 39868, REGISTERED PROFESSIONAL ENGINEER
EXPIRES: APRIL 7, 2005

CALL 48 HOURS BEFORE YOU DIG
1-800-553-4344
"It's the Law"
NORTHWEST UTILITIES NOTIFICATION CENTER

DESIGNED	BK
DRAWN	RK
CRP	330522
HOR.	1"=20'
VERT.	1"=5'
DATE	1/28/04
DWG:	PP1
SHEET	OF

CLARK COUNTY
WASHINGTON
proud past, promising future

DESIGN & ENGINEERING DIVISION
DESIGN SECTION
NE 99TH STREET
PLAN & PROFILE STA 18+00 TO 23+00

BRUCE A. KILLIG
STATE OF WASHINGTON
REGISTERED
PROFESSIONAL ENGINEER
19868
EXPIRES APRIL 7, 2005

CALL 48 HOURS BEFORE YOU DIG
1-800-553-4344
"It's the Law"
NORTHWEST UTILITIES NOTIFICATION CENTER

DESIGNED	BK
DRAWN	RK
CRP	330522
HOR.	1"=20'
VERT.	1"=5'
DATE	1/28/04
DWG:	PP2
SHEET	OF

SCALE IN FEET
20 0 20 40

PRELIMINARY

MATCH LINE STA 23+00
SEE DWG PP3

STA X+XX

STA 21+25, 23' RT
BEGIN CURB, GUTTER
AND SIDEWALK

EXISTING CURB, GUTTER
AND SIDEWALK TO REMAIN

NE 99TH STREET

MATCH LINE STA 18+00
SEE DWG PP1

① RELOCATE/REMOVE BY OTHERS
② ADJUST MH RIM/CB GRATE TO FG
③ ADJUST VALVE COVER/METER BOX TO FG
④ REMOVE EXT CULVERT/DRAINAGE STRUCTURE
⑤ SAWCUT AND/OR MATCH EXT CURB AND/OR S/W.
⑥ RELOCATE EXIST MAILBOX TO STA LISTED. (TYPE 1, UNLESS OTHERWISE NOTED)

SAWCUT AND REMOVE EXT RDWY STRUCTURE TO LIMITS SHOWN. REPLACE PER TYPICAL SECTIONS AND PLAN LAYOUT

UNADJUSTED EARTHWORK QUANTITIES

EXCAVATION	X	C.Y.
EMBANKMENT	X	C.Y.

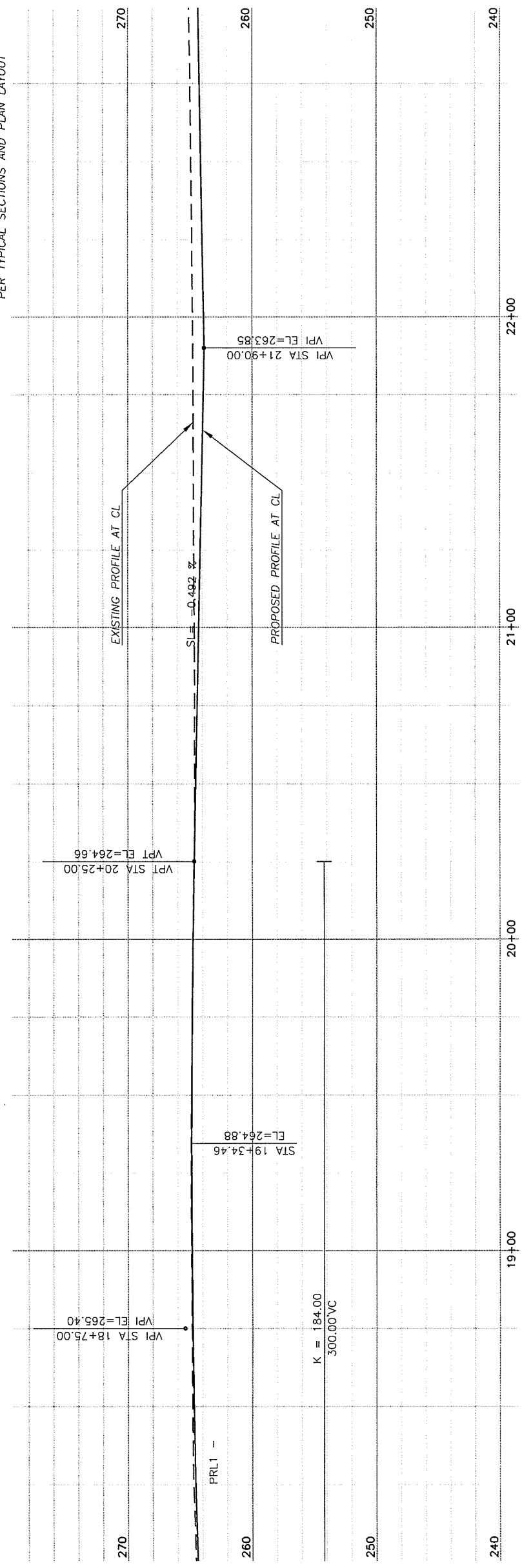

N:\CIP\PROJECTS\330522-NE99thSt-117To137\DESIGN\DWGS\PP2.dwg, Layout1, 1/28/2004 4:43:06 PM, begleyk

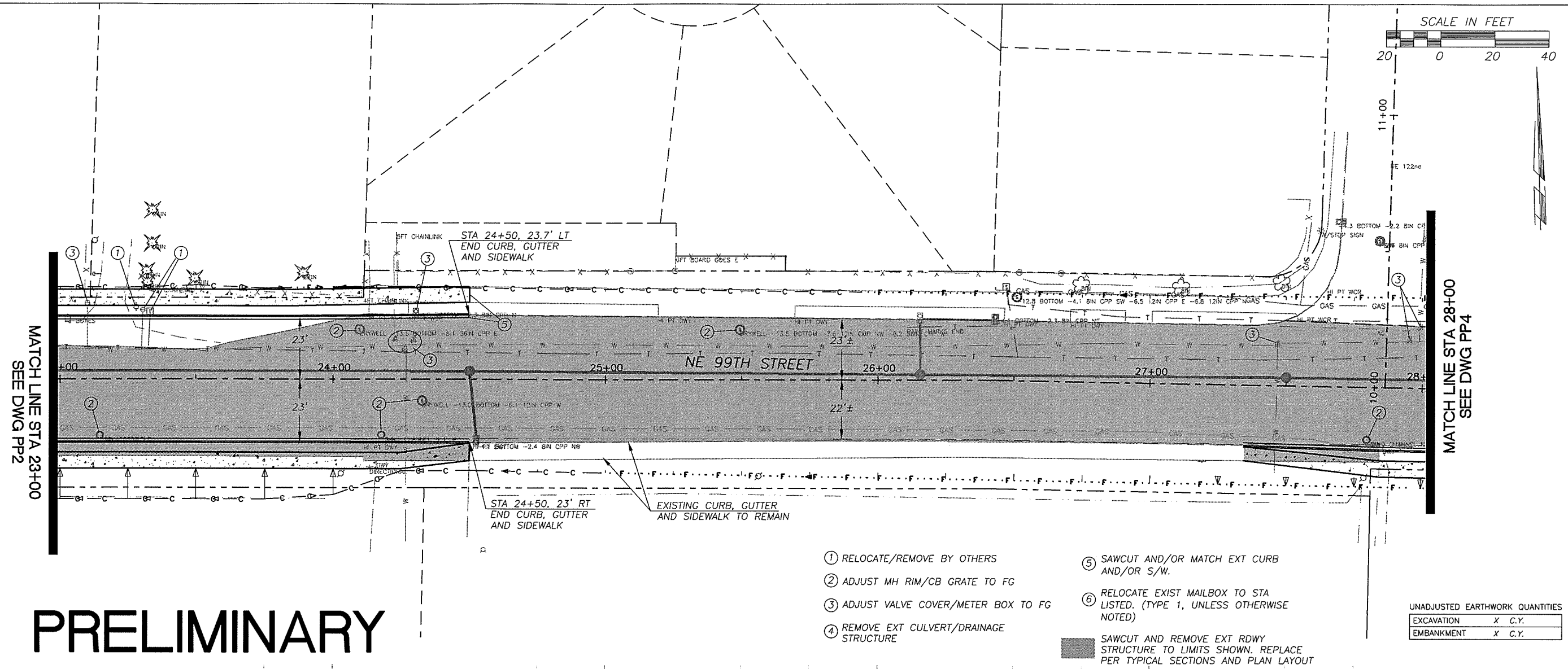

PRELIMINARY

1. RELOCATE/REMOVE BY OTHERS
2. ADJUST MH RIM/CB GRATE TO FG
3. ADJUST VALVE COVER/METER BOX TO FG
4. REMOVE EXT CULVERT/DRAINAGE STRUCTURE
5. SAWCUT AND/OR MATCH EXT CURB AND/OR S/W.
6. RELOCATE EXIST MAILBOX TO STA LISTED. (TYPE 1, UNLESS OTHERWISE NOTED)

SAWCUT AND REMOVE EXT RDWY STRUCTURE TO LIMITS SHOWN. REPLACE PER TYPICAL SECTIONS AND PLAN LAYOUT

UNADJUSTED EARTHWORK QUANTITIES

EXCAVATION	X	C.Y.
EMBANKMENT	X	C.Y.

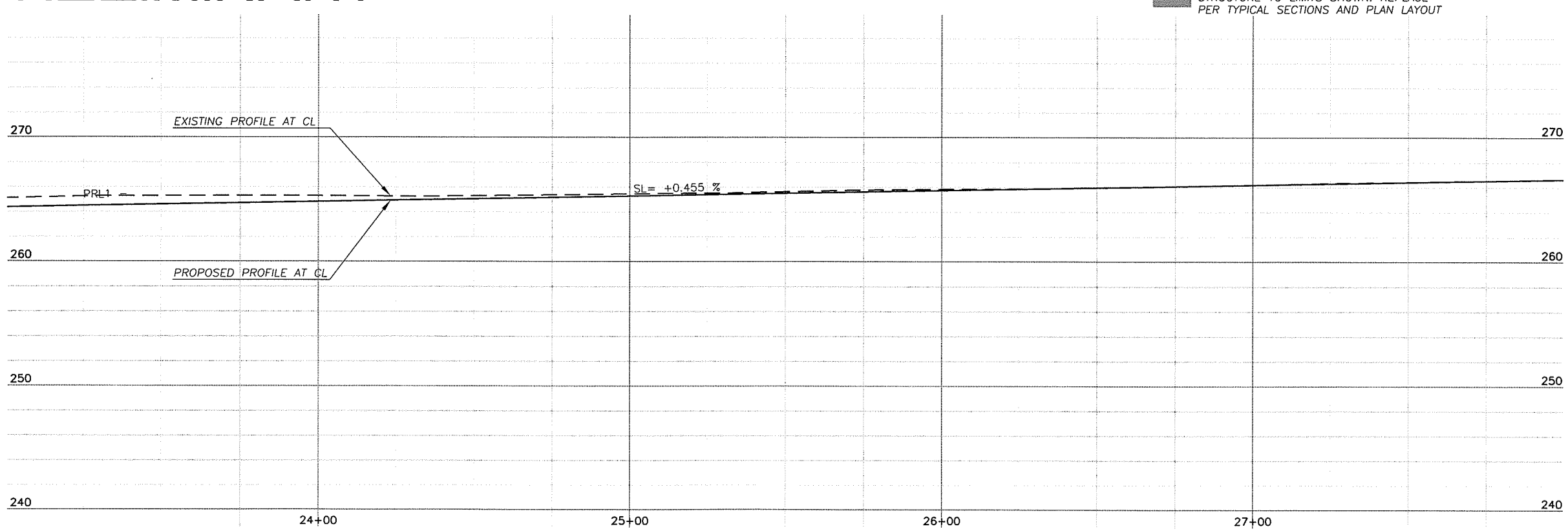

DESIGNED	BK
DRAWN	RK
CRP	330522
HOR.	1"=20'
VERT.	1"=5'
DATE	1/28/04
DWG:	PP3
SHEET	OF

CALL 48 HOURS BEFORE YOU DIG 1-800-553-4344 "It's the Law" NORTHWEST UTILITIES NOTIFICATION CENTER

EXPIRES APRIL 7, 2005

DESIGN & ENGINEERING DIVISION
DESIGN SECTION

NE 99TH STREET
PLAN & PROFILE STA 23+00 TO 28+00

proud past, promising future
CLARK COUNTY WASHINGTON

N:\CIP\PROJECTS\330522-NE99thSt-117To137\DESIGN\DWGS\PP3.dwg, Layout1, 1/28/2004 4:43:28 PM, begleyk

CLARK COUNTY
WASHINGTON
proud past, promising future

DESIGN & ENGINEERING DIVISION
DESIGN SECTION

NE 99TH STREET
PLAN & PROFILE STA 28+00 TO 33+00

GRUCE A. ALLEN
STATE OF WASHINGTON
REGISTERED
PROFESSIONAL ENGINEER
29668
EXPIRES APRIL 7, 2005

CALL 48 HOURS BEFORE YOU DIG
1-800-553-4344
"It's the Law"
NORTHWEST UTILITIES NOTIFICATION CENTER

DESIGNED	BK
DRAWN	RK
CRP	330522
HOR.	1"=20'
VERT.	1"=5'
DATE	1/28/04
DWG:	PP4
SHEET	OF

PRELIMINARY

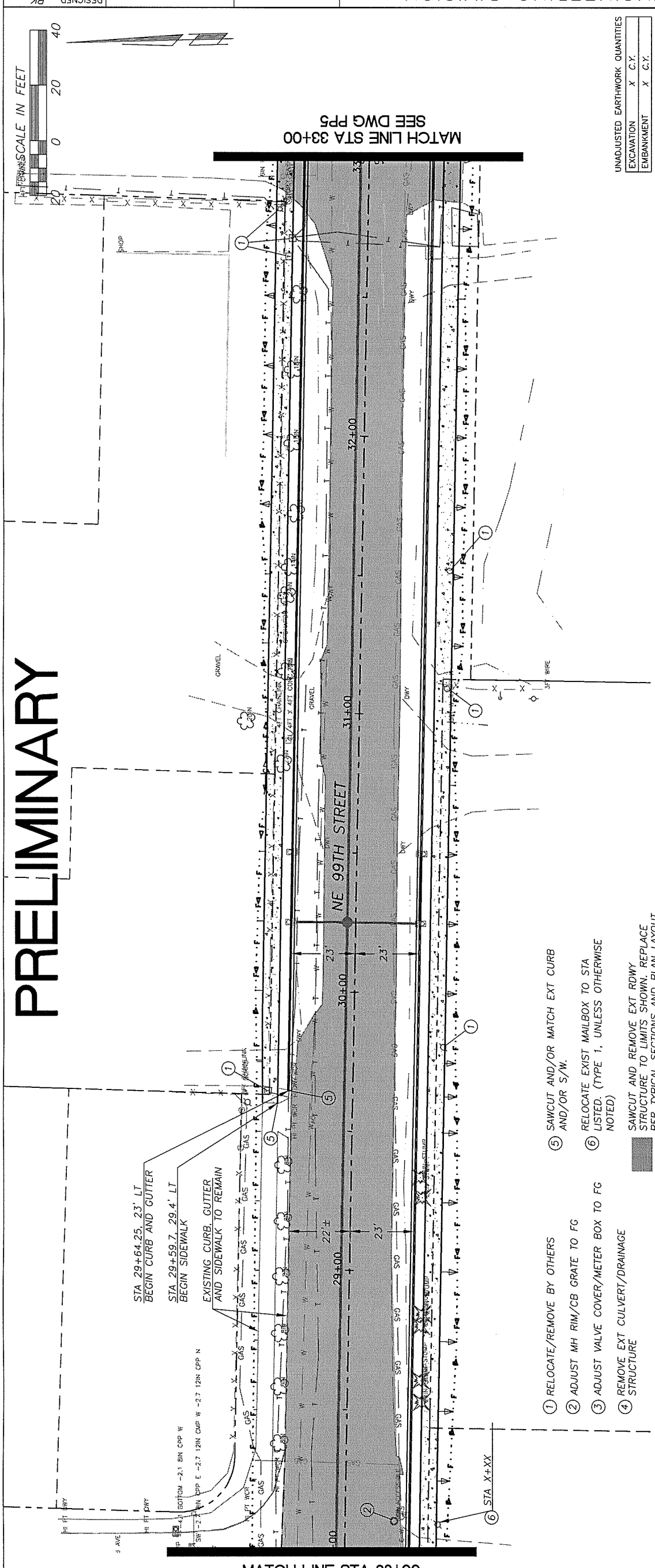

① RELOCATE/REMOVE BY OTHERS
② ADJUST MH RIM/CB GRATE TO FG
③ ADJUST VALVE COVER/METER BOX TO FG
④ REMOVE EXT CULVERT/DRAINAGE STRUCTURE
⑤ SAWCUT AND/OR MATCH EXT CURB AND/OR S/W.
⑥ RELOCATE EXIST MAILBOX TO STA LISTED. (TYPE 1, UNLESS OTHERWISE NOTED)
SAWCUT AND REMOVE EXT RDWY STRUCTURE TO LIMITS SHOWN. REPLACE PER TYPICAL SECTIONS AND PLAN LAYOUT

UNADJUSTED EARTHWORK QUANTITIES

EXCAVATION	X	C.Y.
EMBANKMENT	X	C.Y.

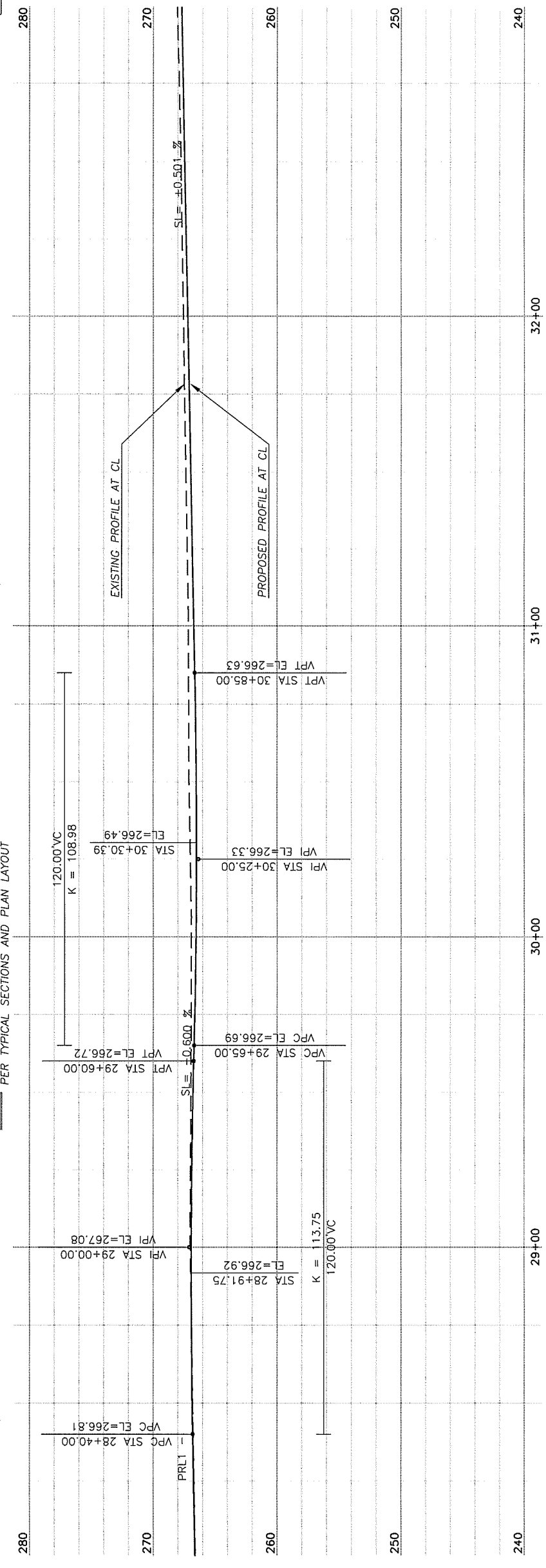

N:\CIP\PROJECTS\330522-NE99thSt-117To137\DESIGN\DWGS\PP4.dwg, Layout1, 1/28/2004 4:43:47 PM, begleyk

PRELIMINARY

CLARK COUNTY
WASHINGTON
Proud past, promising future.

DESIGN & ENGINEERING DIVISION
DESIGN SECTION
NE 99TH STREET
PLAN & PROFILE STA 33+00 TO 38+00

BRUCE A. KLUG
STATE OF WASHINGTON
PROFESSIONAL ENGINEER
29868
EXPIRES APRIL 7, 2005

CALL 48 HOURS BEFORE YOU DIG
1-800-553-4344
"It's the Law"
NORTHWEST UTILITIES NOTIFICATION CENTER

DESIGNED	BK
DRAWN	RK
CRP	330522
HOR.	1"=20'
VERT.	1"=5'
DATE	1/18/04
DWG:	PP5
SHEET	OF

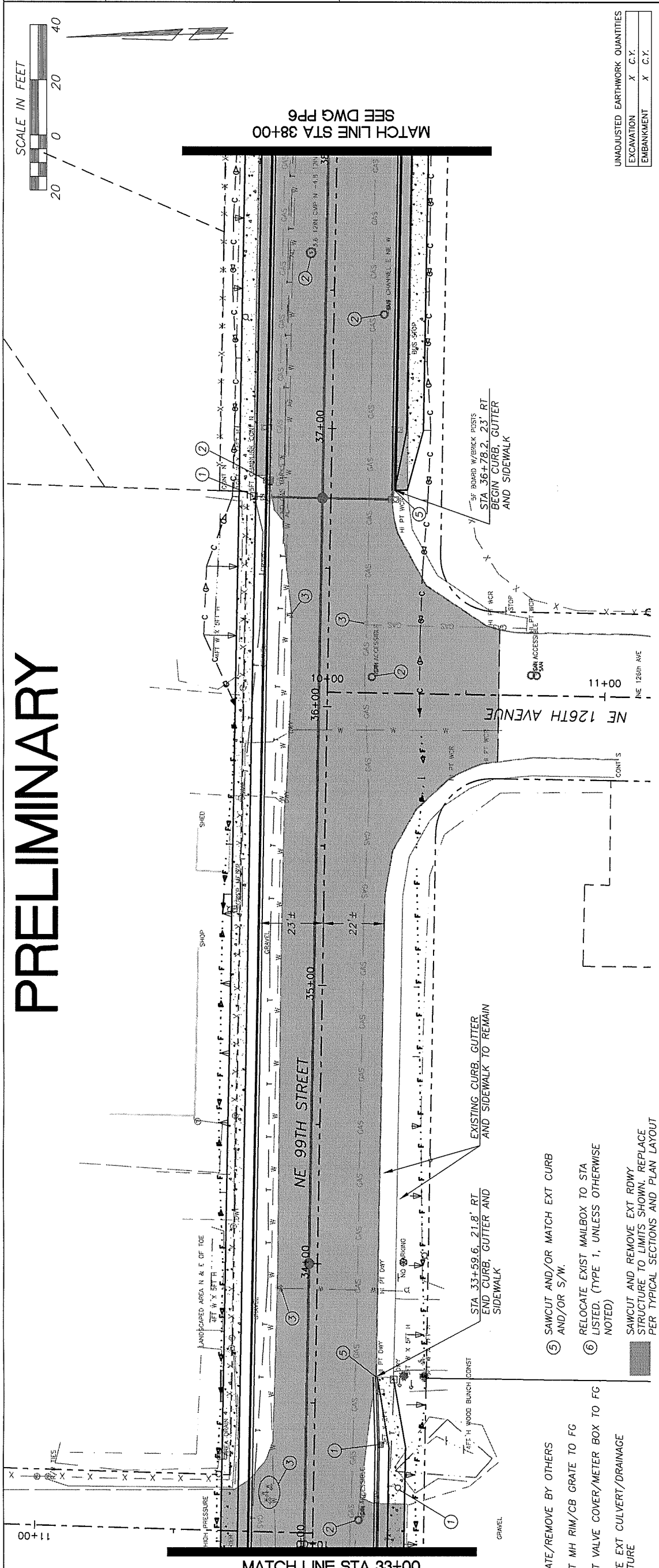

① RELOCATE/REMOVE BY OTHERS
② ADJUST MH RIM/CB GRATE TO FG
③ ADJUST VALVE COVER/METER BOX TO FG
④ REMOVE EXT CULVERT/DRAINAGE STRUCTURE
⑤ SAWCUT AND/OR MATCH EXT CURB AND/OR S/W.
⑥ RELOCATE EXIST MAILBOX TO STA LISTED. (TYPE 1, UNLESS OTHERWISE NOTED)
SAWCUT AND REMOVE EXT RDWY STRUCTURE TO LIMITS SHOWN. REPLACE PER TYPICAL SECTIONS AND PLAN LAYOUT

UNADJUSTED EARTHWORK QUANTITIES

EXCAVATION	X	C.Y.
EMBANKMENT	X	C.Y.

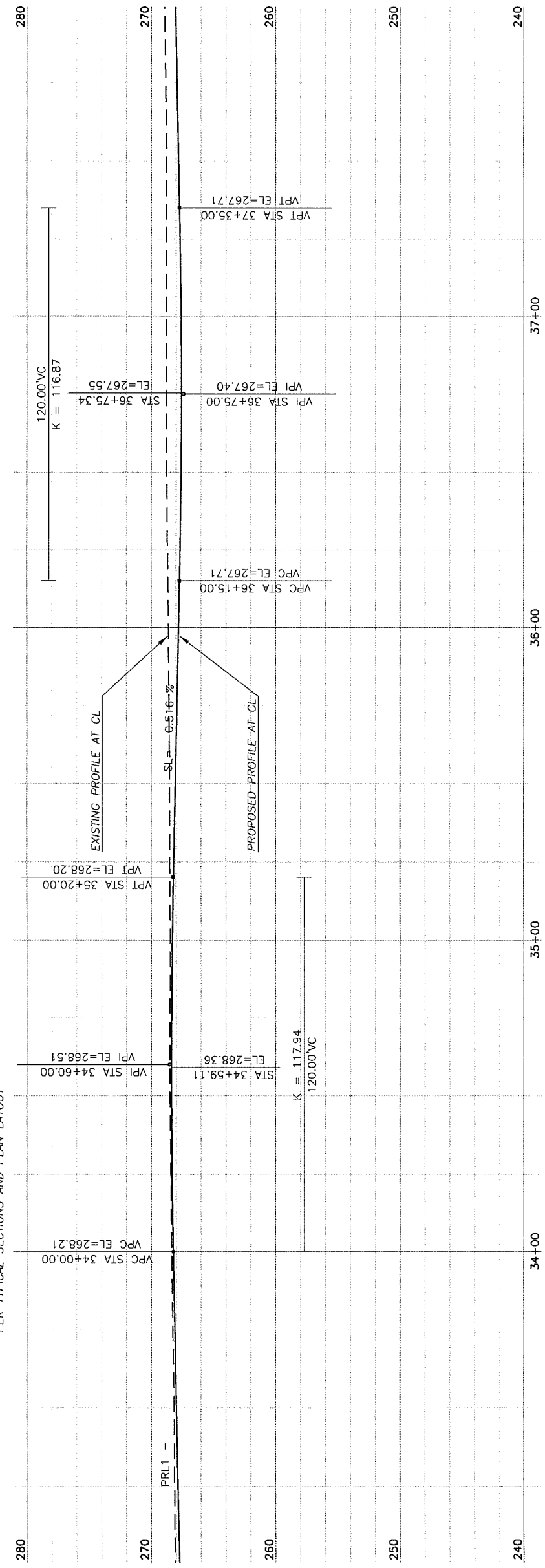

N:\CIP\PROJECTS\330522-NE99thSt-117To137\DESIGN\DWGS\PP5.dwg, Layout1, 1/28/2004 4:44:12 PM, begleyk

CLARK COUNTY
WASHINGTON
proud past, promising future.

DESIGN & ENGINEERING DIVISION
DESIGN SECTION

NE 99TH STREET
PLAN & PROFILE STA 38+00 TO 43+00

BRUCE A. KLUG
STATE OF WASHINGTON
PROFESSIONAL ENGINEER
REGISTERED
39868
EXPIRES APRIL 7, 2005

CALL 48 HOURS BEFORE YOU DIG
1-800-553-4344
"It's the Law"
NORTHWEST UTILITIES NOTIFICATION CENTER

DESIGNED	BK
DRAWN	RK
CRP	330522
HOR.	1"=20'
VERT.	1"=5'
DATE	1/28/04
DWG:	PP6
SHEET	OF

PRELIMINARY

SCALE IN FEET
20 0 20 40

MATCH LINE STA 43+00
SEE DWG PP7

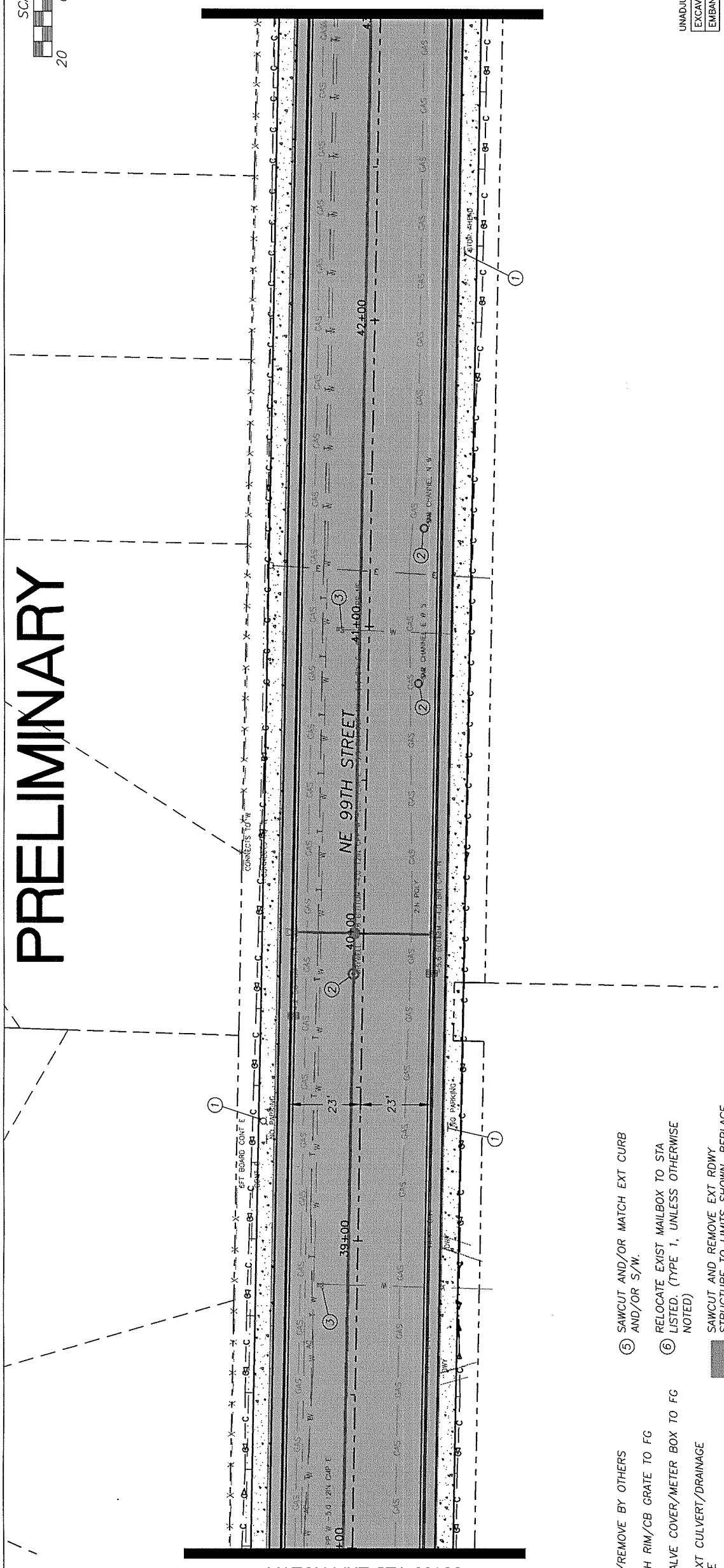

MATCH LINE STA 38+00
SEE DWG PP5

UNADJUSTED EARTHWORK QUANTITIES

EXCAVATION	X	C.Y.
EMBANKMENT	X	C.Y.

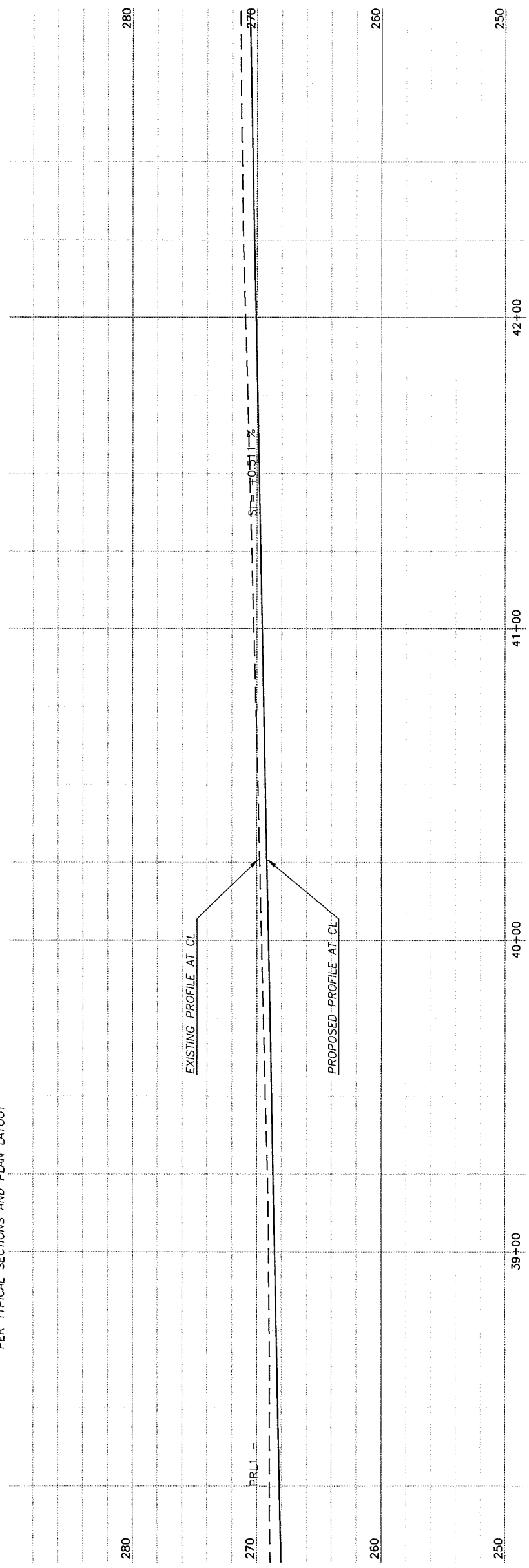

1. RELOCATE/REMOVE BY OTHERS
2. ADJUST MH RIM/CB GRATE TO FG
3. ADJUST VALVE COVER/METER BOX TO FG
4. REMOVE EXT CULVERT/DRAINAGE STRUCTURE
5. SAWCUT AND/OR MATCH EXT CURB AND/OR S/W.
6. RELOCATE EXIST MAILBOX TO STA LISTED. (TYPE 1, UNLESS OTHERWISE NOTED)

SAWCUT AND REMOVE EXT RDWY STRUCTURE TO LIMITS SHOWN. REPLACE PER TYPICAL SECTIONS AND PLAN LAYOUT

N:\CIP\PROJECTS\330522-NE99thSt-1177o137\DESIGN\DWGS\PP6.dwg, Layout1, 1/28/2004 4:44:32 PM, begleyk

CLARK COUNTY
WASHINGTON
proud past, promising future

DESIGN & ENGINEERING DIVISION
DESIGN SECTION

NE 99TH STREET
PLAN & PROFILE STA 43+00 TO 48+00

BRUCE A. KLUG
STATE OF WASHINGTON
REGISTERED
PROFESSIONAL ENGINEER
20888
EXPIRES APRIL 7, 2005

CALL 48 HOURS BEFORE YOU DIG
1-800-553-4344
"It's the Law"
NORTHWEST UTILITIES NOTIFICATION CENTER

DESIGNED	BK
DRAWN	RK
CRP	330522
HOR.	1"=20'
VERT.	1"=5'
DATE	1/28/04
DWG:	PP7
SHEET	OF

PRELIMINARY

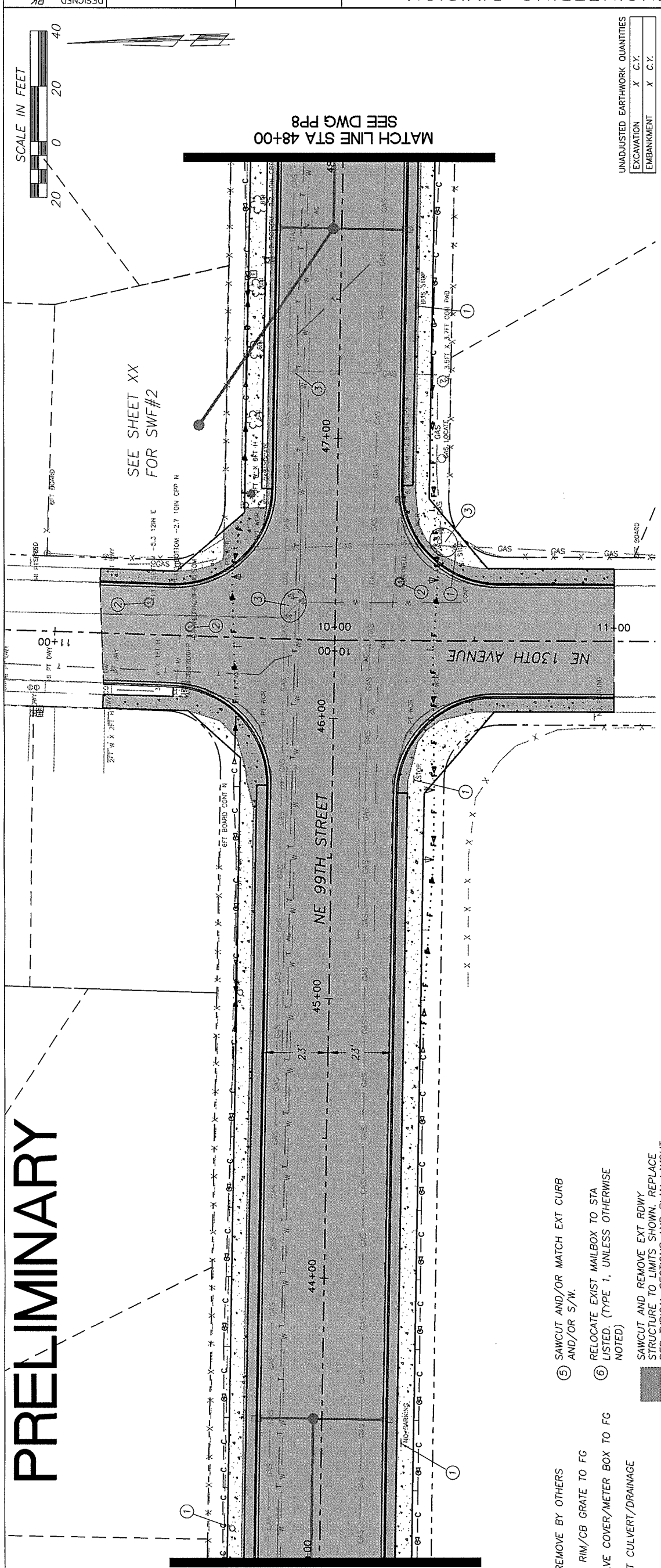

UNADJUSTED EARTHWORK QUANTITIES

EXCAVATION	X	C.Y.
EMBANKMENT	X	C.Y.

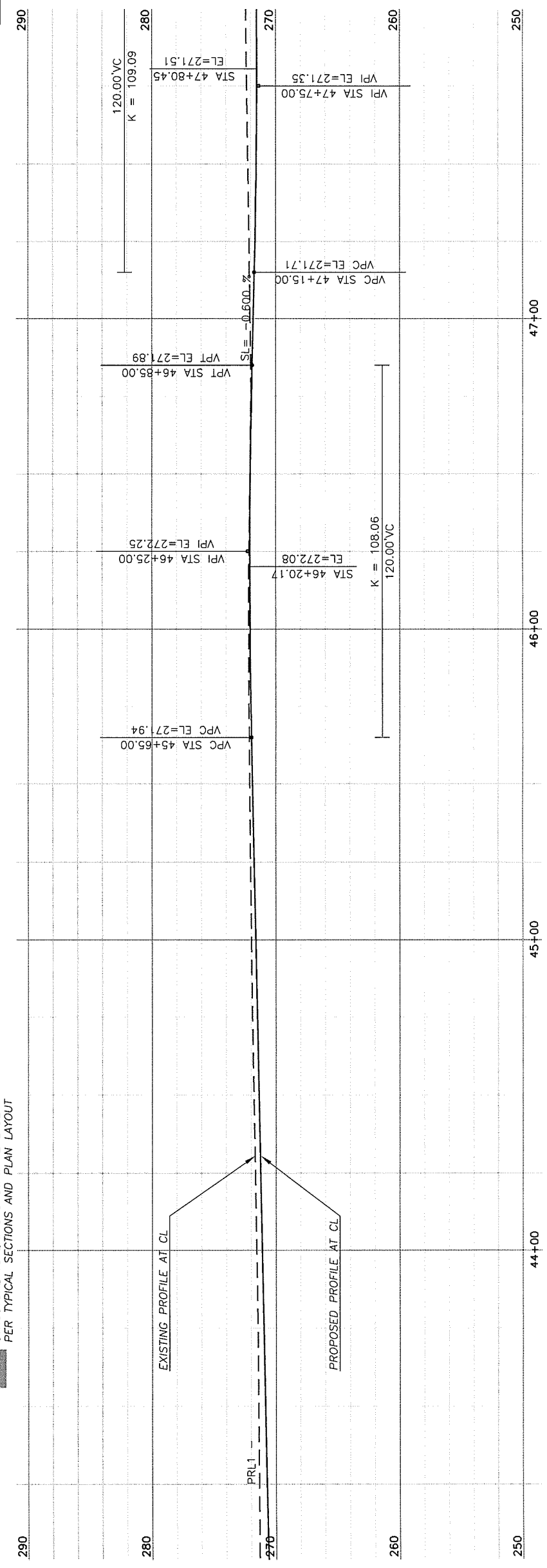

1. RELOCATE/REMOVE BY OTHERS
2. ADJUST MH RIM/CB GRATE TO FG
3. ADJUST VALVE COVER/METER BOX TO FG
4. REMOVE EXT CULVERT/DRAINAGE STRUCTURE
5. SAWCUT AND/OR MATCH EXT CURB AND/OR S/W.
6. RELOCATE EXIST MAILBOX TO STA LISTED. (TYPE 1, UNLESS OTHERWISE NOTED)

SAWCUT AND REMOVE EXT RDWY STRUCTURE TO LIMITS SHOWN. REPLACE PER TYPICAL SECTIONS AND PLAN LAYOUT

N:\CIP\PROJECTS\330522-NE99thSt-117To137\DESIGN\DWGS\PP7.dwg, Layout1, 1/28/2004 4:44:54 PM, begleyk

PRELIMINARY

1. RELOCATE/REMOVE BY OTHERS
2. ADJUST MH RIM/CB GRATE TO FG
3. ADJUST VALVE COVER/METER BOX TO FG
4. REMOVE EXT CULVERT/DRAINAGE STRUCTURE
5. SAWCUT AND/OR MATCH EXT CURB AND/OR S/W.
6. RELOCATE EXIST MAILBOX TO STA LISTED. (TYPE 1, UNLESS OTHERWISE NOTED)

SAWCUT AND REMOVE EXT RDWY STRUCTURE TO LIMITS SHOWN. REPLACE PER TYPICAL SECTIONS AND PLAN LAYOUT

SCALE IN FEET

20 0 20 40

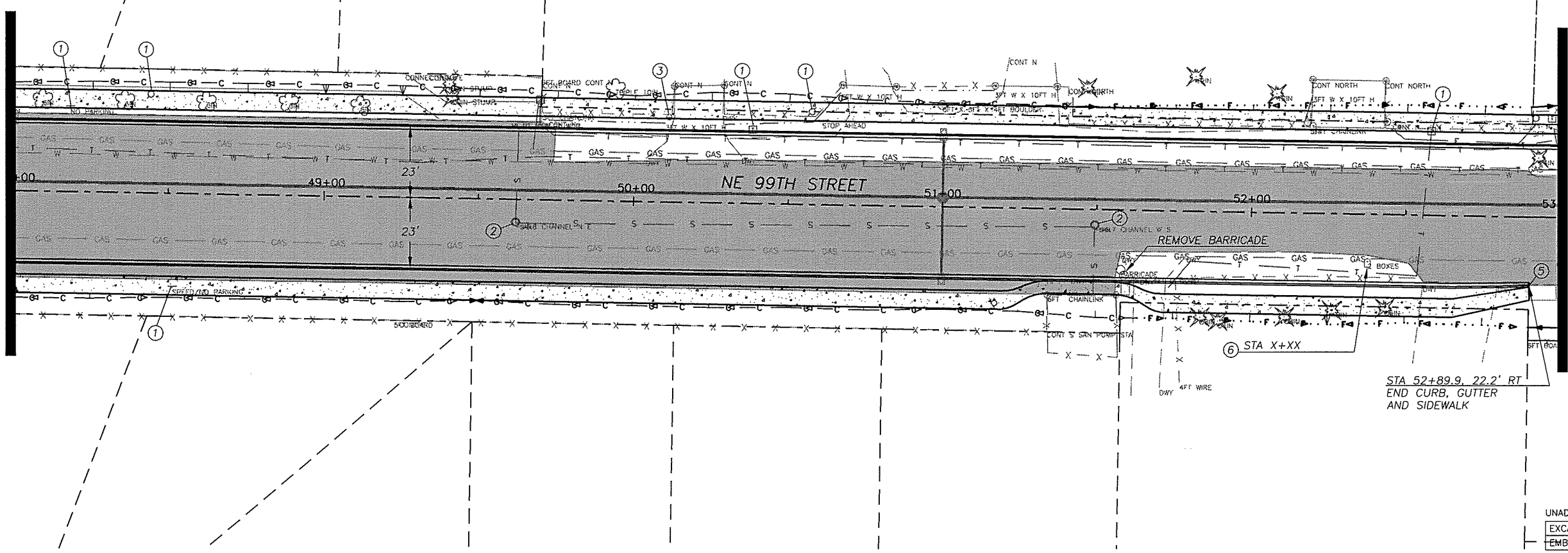

UNADJUSTED EARTHWORK QUANTITIES

EXCAVATION	X	C.Y.
EMBANKMENT	X	C.Y.

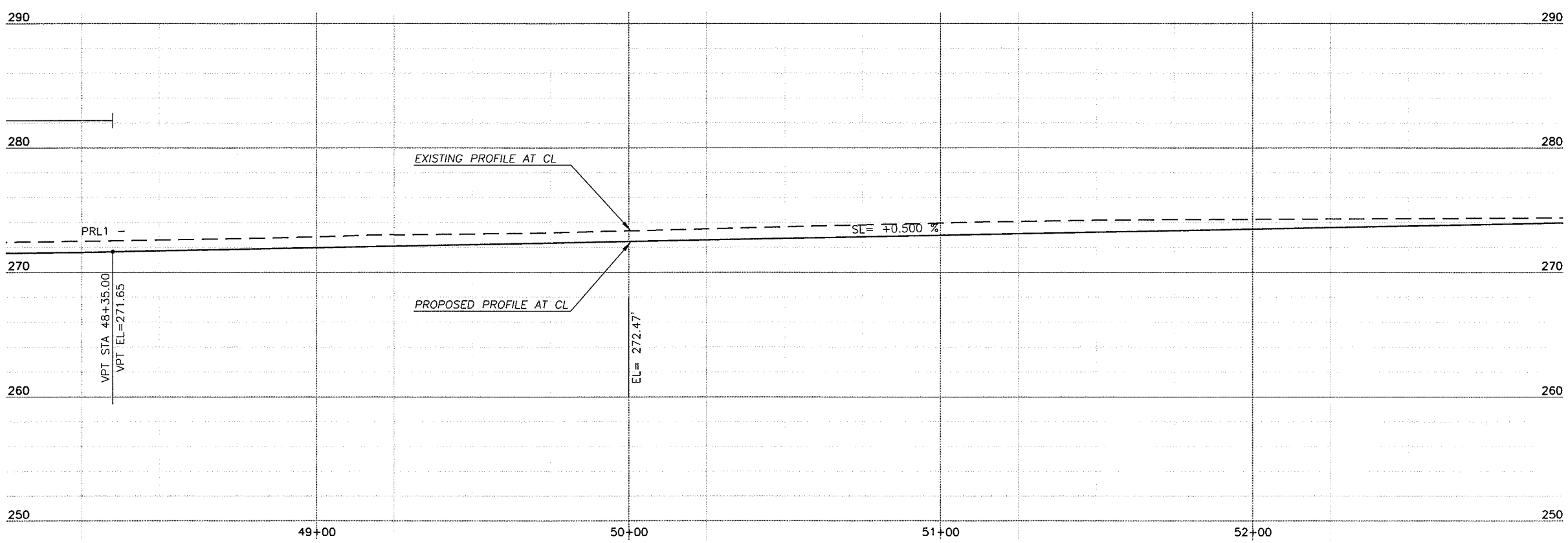

DESIGNED	BK
DRAWN	RK
CRP	330522
HOR.	1"=20'
VERT.	1"=5'
DATE	1/28/04
DWG:	PP8
SHEET	OF

CALL 48 HOURS BEFORE YOU DIG
1-800-553-4344
"It's the Law"
NORTHWEST UTILITIES NOTIFICATION CENTER

STATE OF WASHINGTON
39968
REGISTERED PROFESSIONAL ENGINEER
EXPIRES APRIL 7, 2005

DESIGN & ENGINEERING DIVISION
DESIGN SECTION

NE 99TH STREET
PLAN & PROFILE STA 48+00 TO 53+00

proud past, promising future
CLARK COUNTY
WASHINGTON

N:\CIP\PROJECTS\330522-NE99thSt-117To137\DESIGN\DWGS\PP8.dwg, Layout1, 1/28/2004 4:45:13 PM, begleyk

PRELIMINARY

1. RELOCATE/REMOVE BY OTHERS
2. ADJUST MH RIM/CB GRATE TO FG
3. ADJUST VALVE COVER/METER BOX TO FG
4. REMOVE EXT CULVERT/DRAINAGE STRUCTURE
5. SAWCUT AND/OR MATCH EXT CURB AND/OR S/W.
6. RELOCATE EXIST MAILBOX TO STA LISTED. (TYPE 1, UNLESS OTHERWISE NOTED)

SAWCUT AND REMOVE EXT RDWY STRUCTURE TO LIMITS SHOWN. REPLACE PER TYPICAL SECTIONS AND PLAN LAYOUT

SCALE IN FEET
20 0 20 40

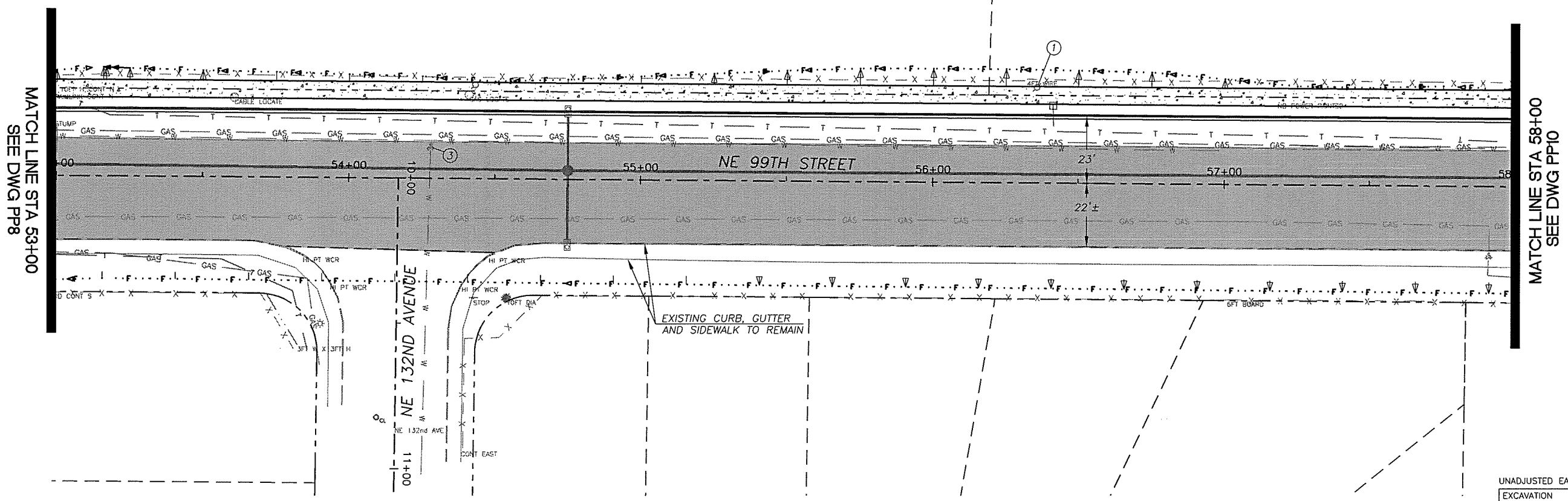

UNADJUSTED EARTHWORK QUANTITIES

EXCAVATION	X	C.Y.
EMBANKMENT	X	C.Y.

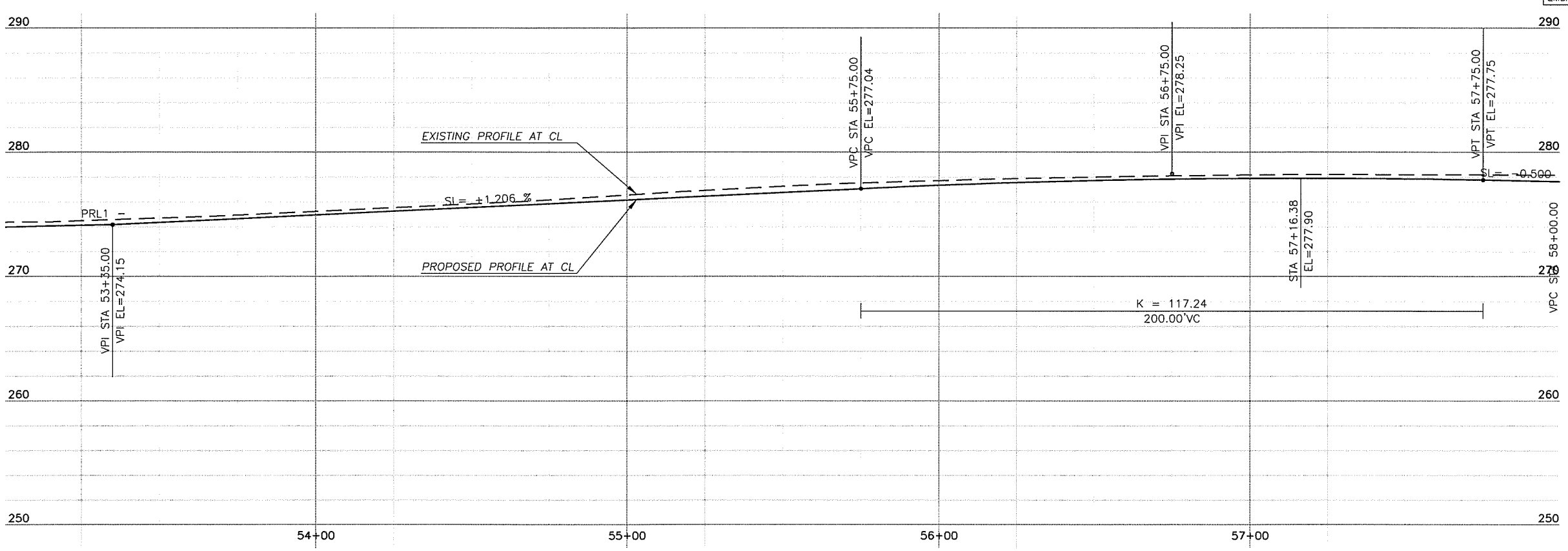

DESIGNED	BK
DRAWN	RK
CRP	330522
HOR.	1"=20'
VERT.	1"=5'
DATE	1/28/04
DWG:	PP9
SHEET	OF

CALL 48 HOURS BEFORE YOU DIG
1-800-553-4344
"It's the Law"
NORTHWEST UTILITIES NOTIFICATION CENTER

STATE OF WASHINGTON
JOSEPH A. KILLIAN
38868
REGISTERED PROFESSIONAL ENGINEER
EXPIRES APRIL 7, 2005

DESIGN & ENGINEERING DIVISION
DESIGN SECTION

NE 99TH STREET
PLAN & PROFILE STA 53+00 TO 58+00

proud past, promising future
CLARK COUNTY
WASHINGTON

N:\CIP\PROJECTS\330522-NE99thSt-117To137\DESIGN\DWGS\PP9.dwg, Layout1, 1/28/2004 4:45:34 PM, begleyk

PRELIMINARY

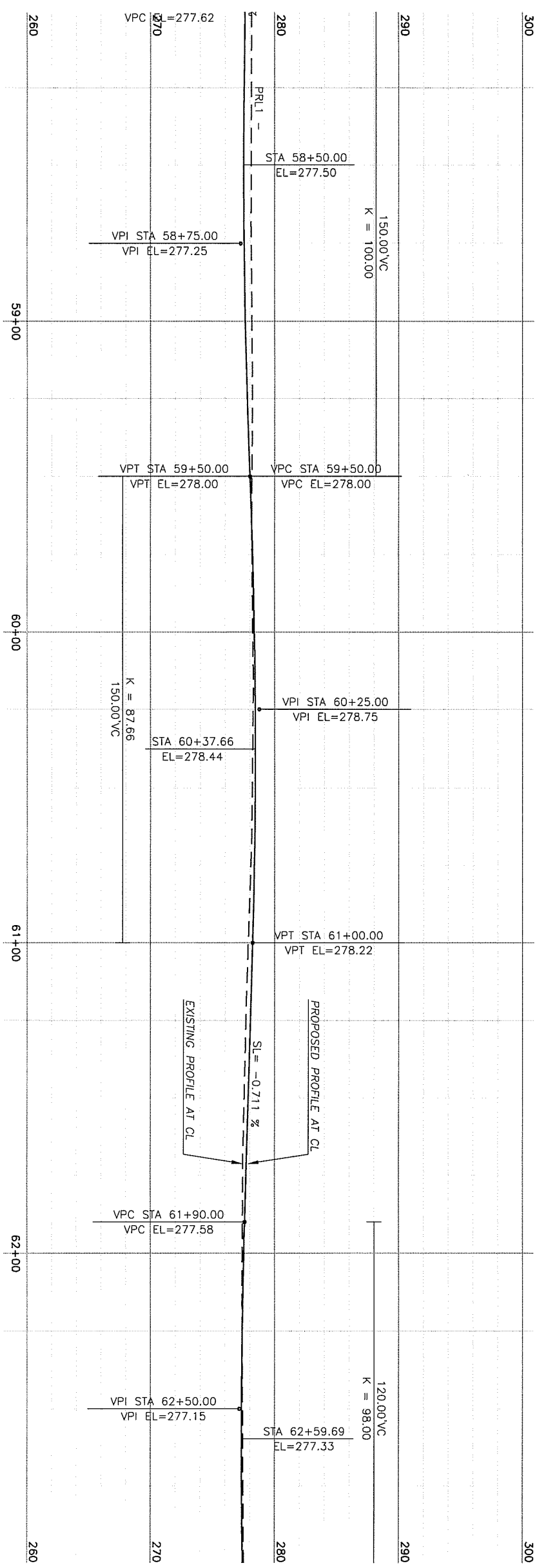

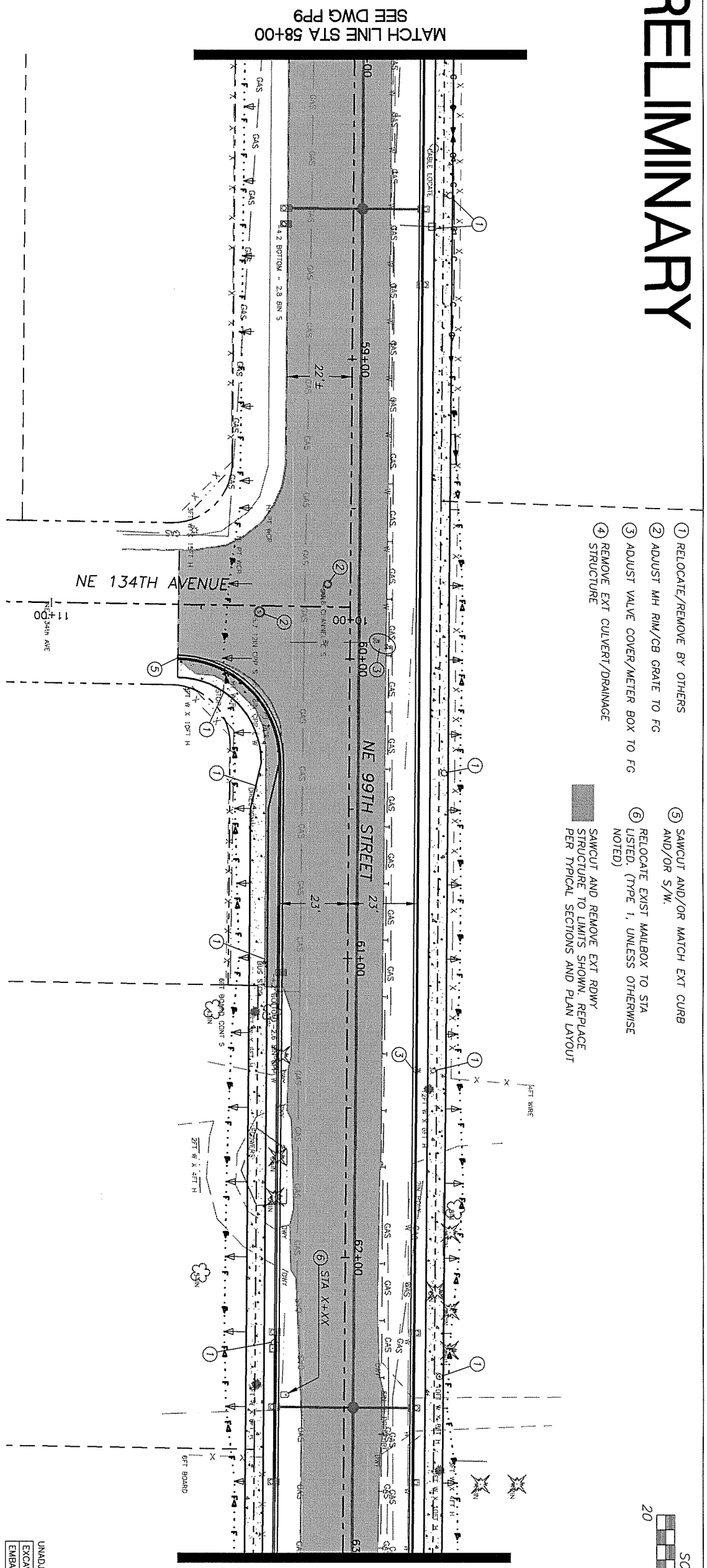

1. RELOCATE/REMOVE BY OTHERS
2. ADJUST MH RIM/CB GRATE TO FG
3. ADJUST VALVE COVER/METER BOX TO FG
4. REMOVE EXT CULVERT/DRAINAGE STRUCTURE
5. SAWCUT AND/OR MATCH EXT CURB AND/OR S/W.
6. RELOCATE EXIST MAILBOX TO STA LISTED. (TYPE 1, UNLESS OTHERWISE NOTED)

SAWCUT AND REMOVE EXT RDWY STRUCTURE TO LIMITS SHOWN, REPLACE PER TYPICAL SECTIONS AND PLAN LAYOUT

UNADJUSTED EARTHWORK QUANTITIES

EXCAVATION	X	C.Y.
EMBANKMENT	X	C.Y.

proud past, promising future

CLARK COUNTY
WASHINGTON

DESIGN & ENGINEERING DIVISION
DESIGN SECTION

NE 99TH STREET
PLAN & PROFILE STA 58+00 TO 63+00

BRUCE A. KLUG
STATE OF WASHINGTON
39868
REGISTERED
PROFESSIONAL ENGINEER
EXPIRES:APRIL 7, 2005

CALL 48 HOURS BEFORE YOU DIG
1-800-553-4344
"It's the Law"
NORTHWEST UTILITIES NOTIFICATION CENTER

DESIGNED	BK
DRAWN	RK
CRP	330522
HOR.	1"=20'
VERT.	1"=5'
DATE	1/28/04
DWG:	PP10
SHEET	OF

PRELIMINARY

SCALE IN FEET
20 0 20 40

1. RELOCATE/REMOVE BY OTHERS
2. ADJUST MH RIM/CB GRATE TO FG
3. ADJUST VALVE COVER/METER BOX TO FG
4. REMOVE EXT CULVERT/DRAINAGE STRUCTURE
5. SAWCUT AND/OR MATCH EXT CURB AND/OR S/W.
6. RELOCATE EXIST MAILBOX TO STA LISTED. (TYPE 1, UNLESS OTHERWISE NOTED)

SAWCUT AND REMOVE EXT RDWY STRUCTURE TO LIMITS SHOWN. REPLACE PER TYPICAL SECTIONS AND PLAN LAYOUT

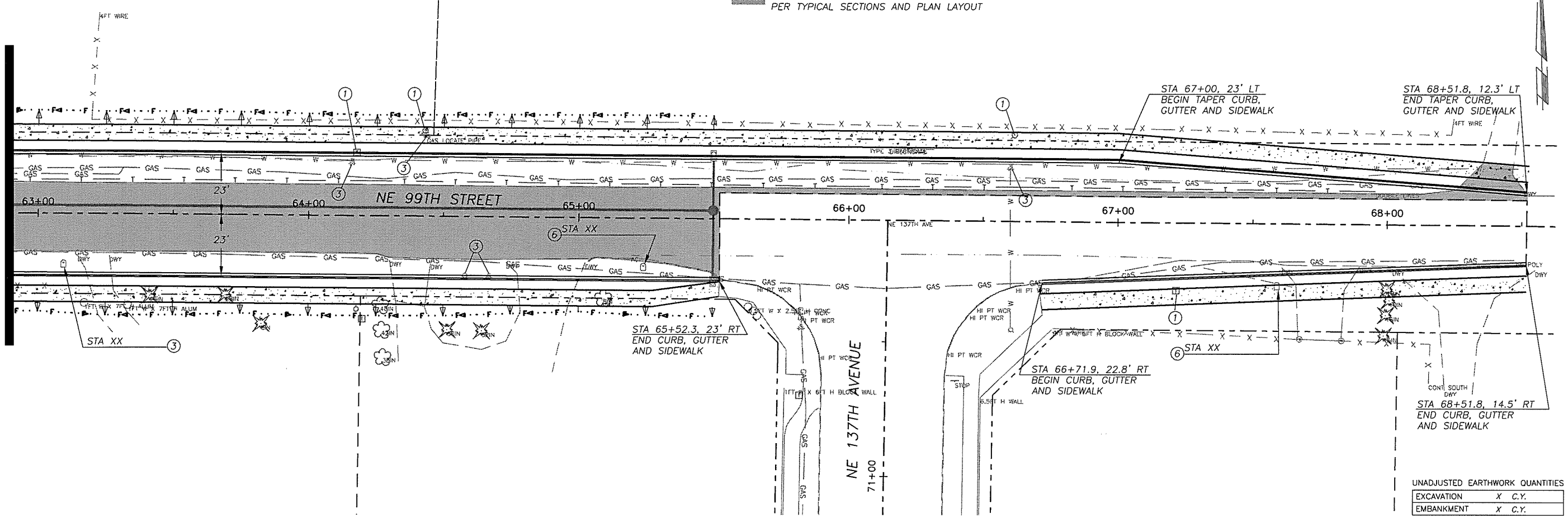

UNADJUSTED EARTHWORK QUANTITIES

EXCAVATION	X	C.Y.
EMBANKMENT	X	C.Y.

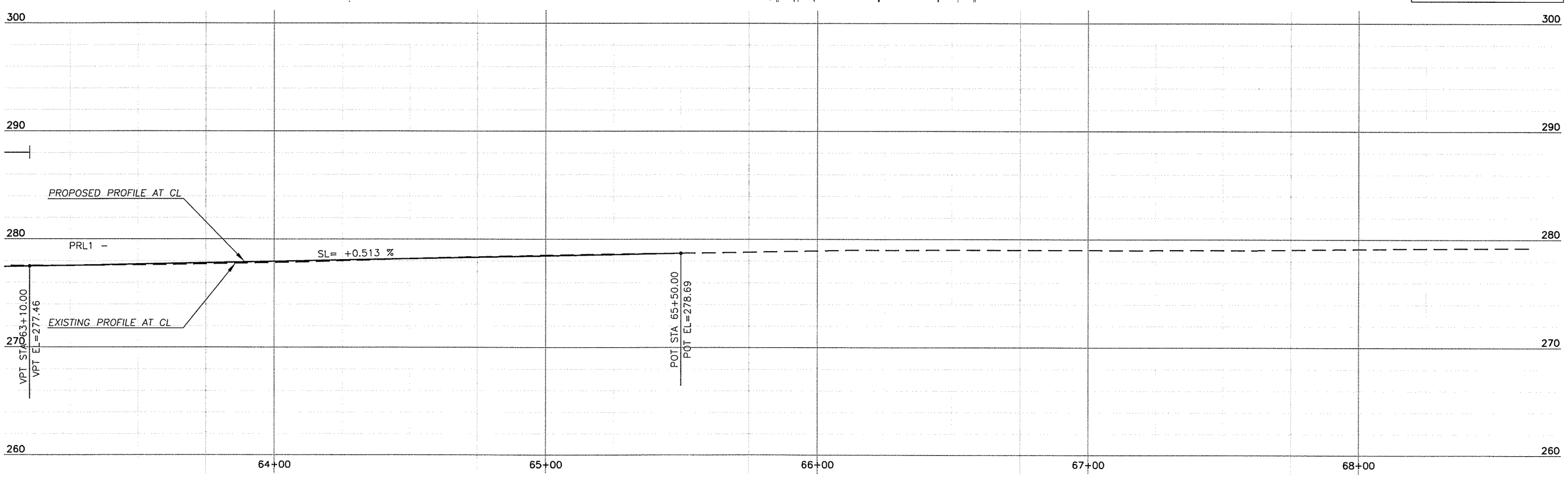

DESIGNED	BK
DRAWN	RK
CRP	330522
HOR.	1"=20'
VERT.	1"=5'
DATE	1/28/04
DWG:	PP11
SHEET	OF

CALL 48 HOURS BEFORE YOU DIG
1-800-553-4344
"It's the Law"
NORTHWEST UTILITIES NOTIFICATION CENTER

STATE OF WASHINGTON
JOSEPH A. ELLIS
22858
REGISTERED PROFESSIONAL ENGINEER
EXPIRES APRIL 7, 2005

DESIGN & ENGINEERING DIVISION
DESIGN SECTION

NE 99TH STREET
PLAN & PROFILE STA 63+00 TO EOP

proud past, promising future
CLARK COUNTY
WASHINGTON

N:\CIP\PROJECTS\330522-NE99thSt-117To137\DESIGN\DWGS\PP11.dwg, Layout1, 1/28/2004 4:49:26 PM, begleyk

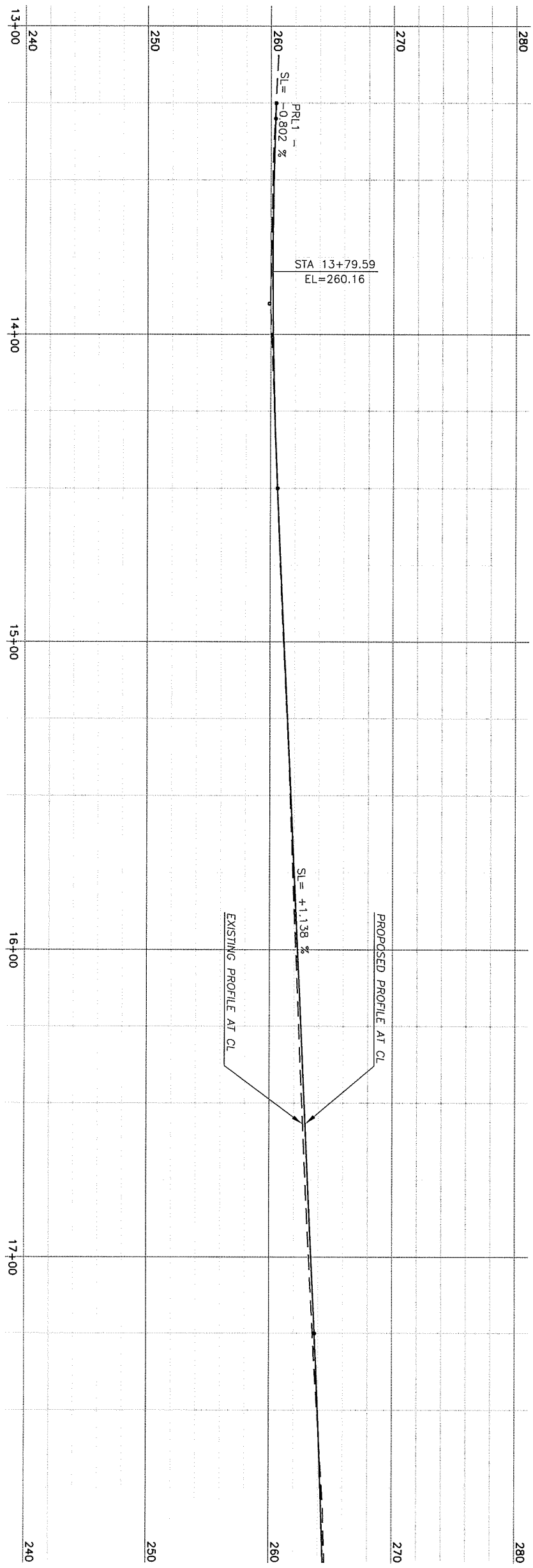

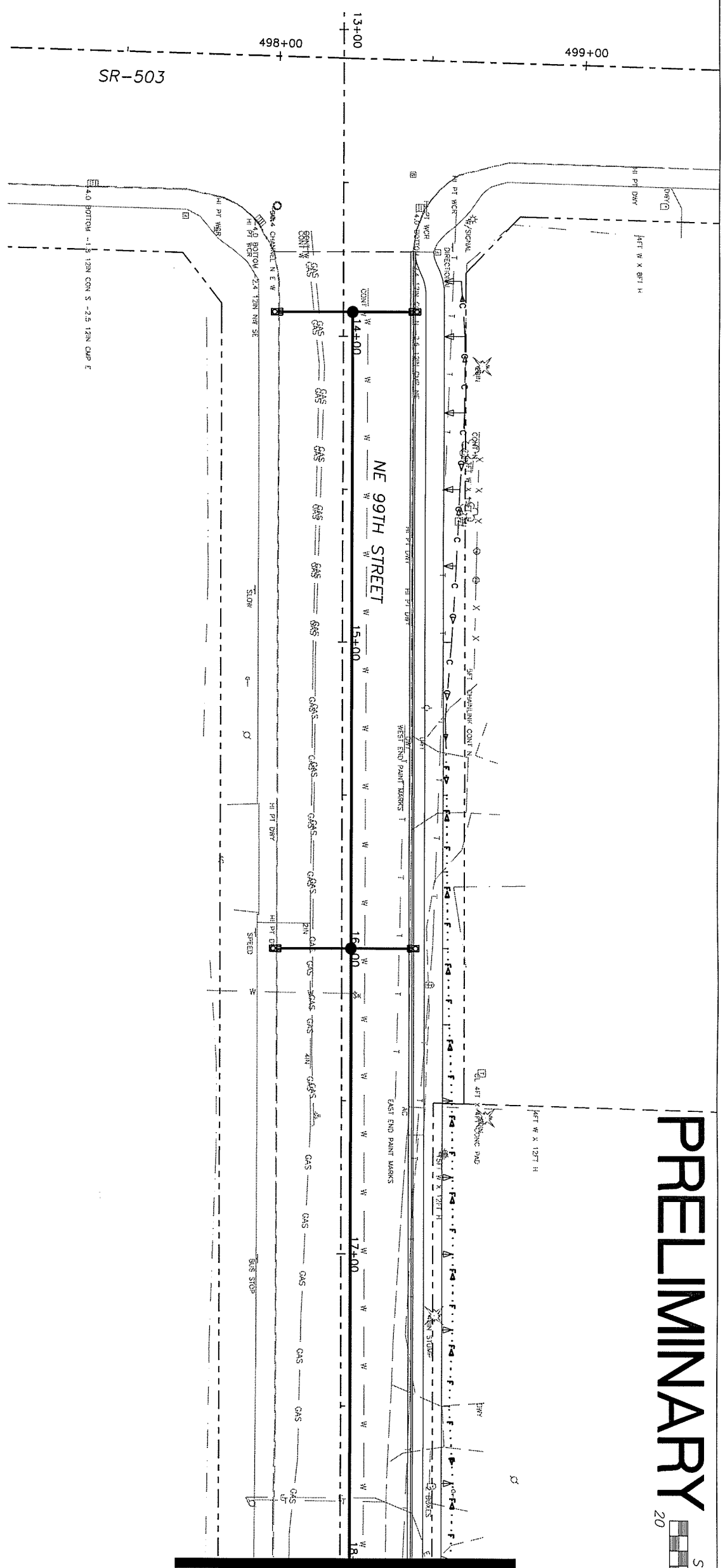

MATCH LINE STA 18+00
SEE DWG DP2

proud past, promising future
CLARK COUNTY
WASHINGTON

DESIGN & ENGINEERING DIVISION
DESIGN SECTION

NE 99TH STREET
DRAINAGE PLAN BOP TO 18+00

BRUCE A. KLUG
STATE OF WASHINGTON
39868
REGISTERED
PROFESSIONAL ENGINEER
EXPIRES:APRIL 7, 2005

CALL 48 HOURS BEFORE YOU DIG
1-800-553-4344
"It's the Law"
NORTHWEST UTILITIES NOTIFICATION CENTER

DESIGNED	BK
DRAWN	RK
CRP	330522
HOR.	1"=20'
VERT.	1"=5'
DATE	1/28/04
DWG:	DP1
SHEET	OF

PRELIMINARY

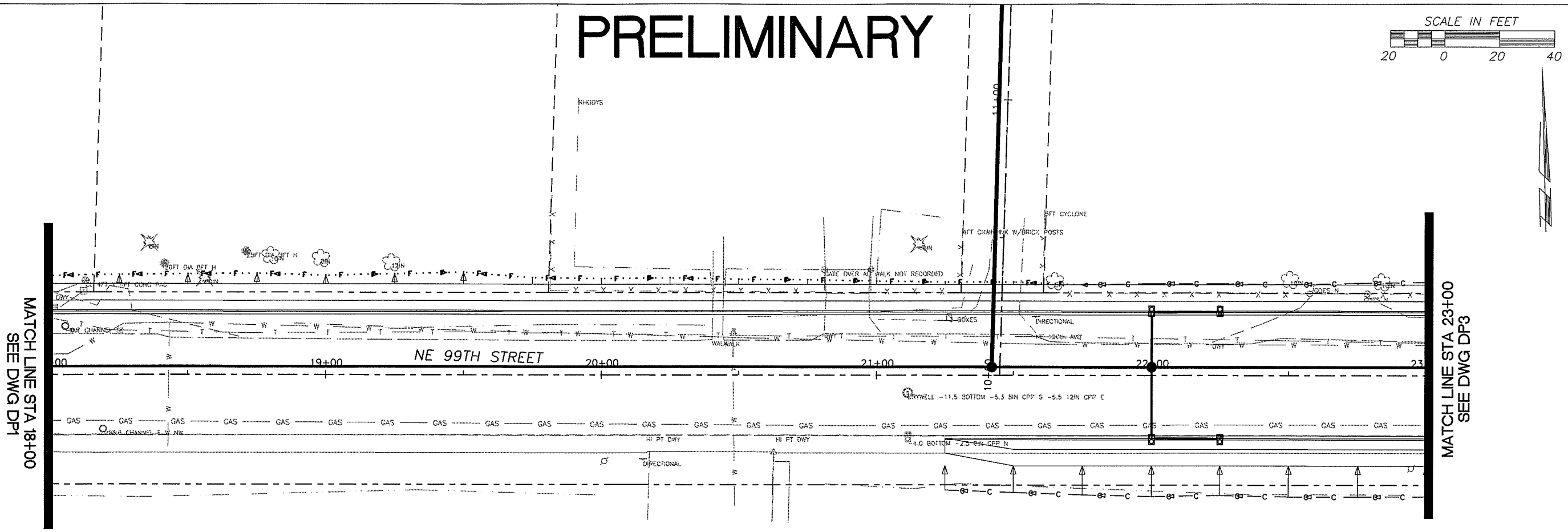

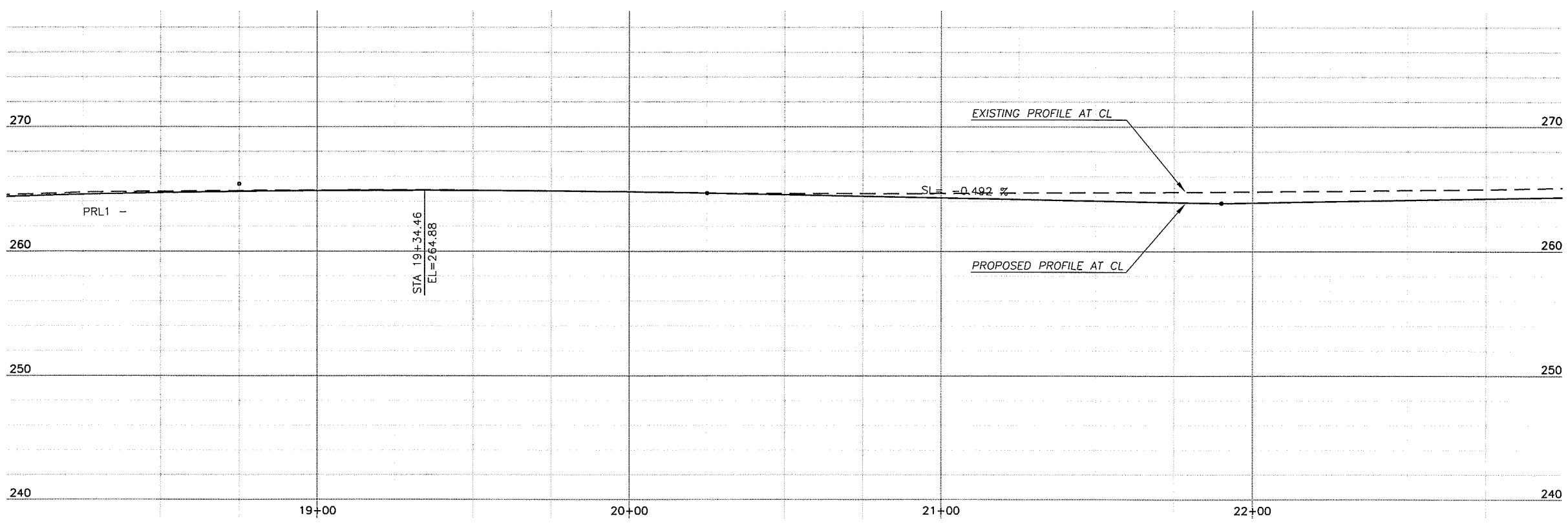

DESIGNED	BK
DRAWN	RK
CRP	330522
HOR.	1"=20'
VERT.	1"=5'
DATE	1/28/04
DWG:	DP2
SHEET	OF

CALL 48 HOURS BEFORE YOU DIG
1-800-553-4344
"It's the Law"
NORTHWEST UTILITIES NOTIFICATION CENTER

STATE OF WASHINGTON
RICHARD KNOWLES
39868
REGISTERED PROFESSIONAL ENGINEER
EXPIRES APRIL 7, 2005

DESIGN & ENGINEERING DIVISION
DESIGN SECTION

NE 99TH STREET
DRAINAGE PLAN STA 18+00 TO 23+00

proud past, promising future
CLARK COUNTY
WASHINGTON

N:\CIP\PROJECTS\330522-NE99thSt-117To137\DESIGN\DWGS\DP2.dwg, Layout1, 1/28/2004 4:32:30 PM, begleyk

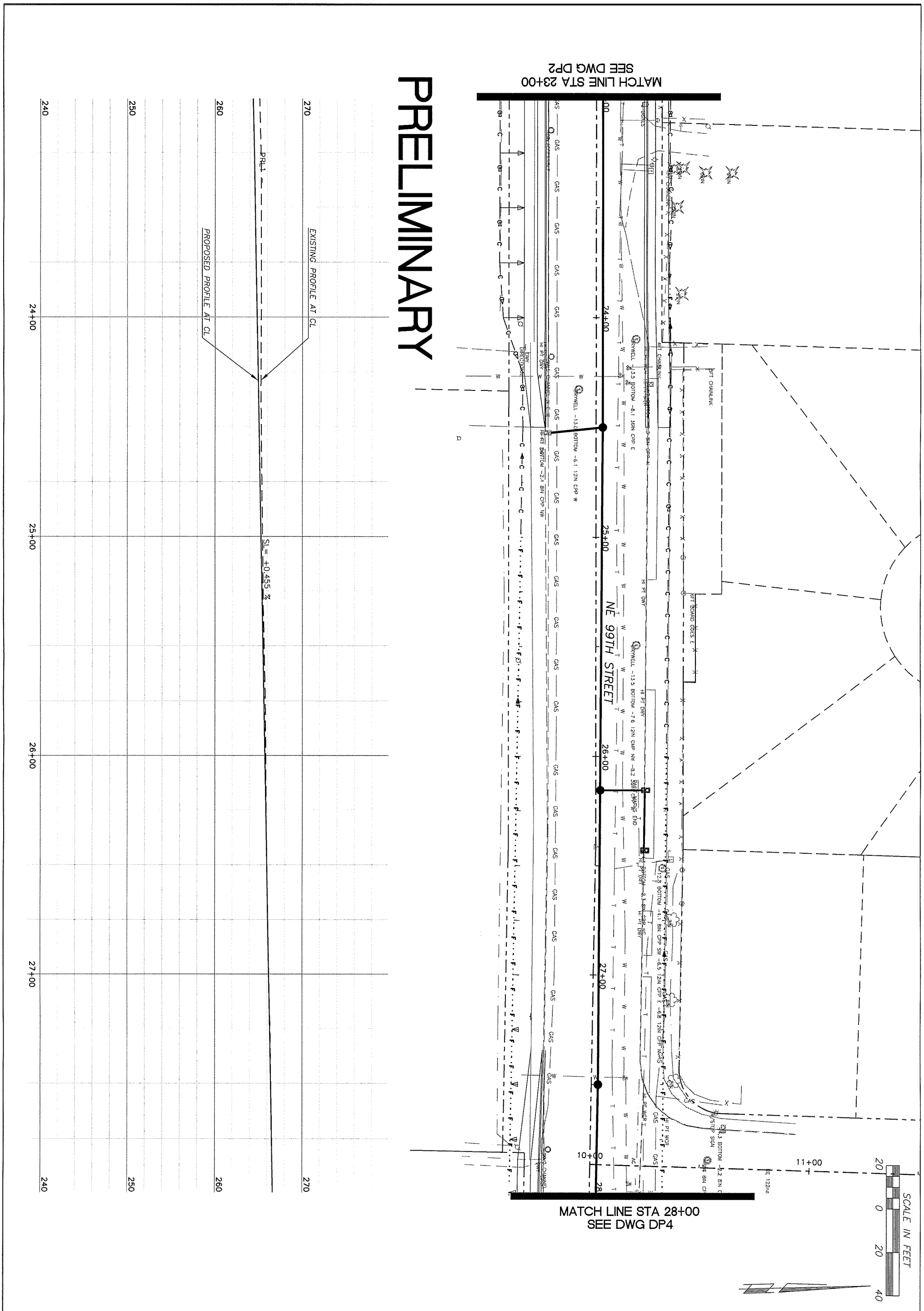

proud past, promising future

CLARK COUNTY
WASHINGTON

DESIGN & ENGINEERING DIVISION
DESIGN SECTION

NE 99TH STREET
DRAINAGE PLAN STA 23+00 TO 28+00

BRUCE A. KLUG
STATE OF WASHINGTON
39868
REGISTERED
PROFESSIONAL ENGINEER
EXPIRES:APRIL 7, 2005

CALL 48 HOURS BEFORE YOU DIG
1-800-553-4344
"It's the Law"
NORTHWEST UTILITIES NOTIFICATION CENTER

DESIGNED	BK
DRAWN	RK
CRP	330522
HOR.	1"=20'
VERT.	1"=5'
DATE	1/28/04
DWG:	DP3
SHEET	OF

PRELIMINARY

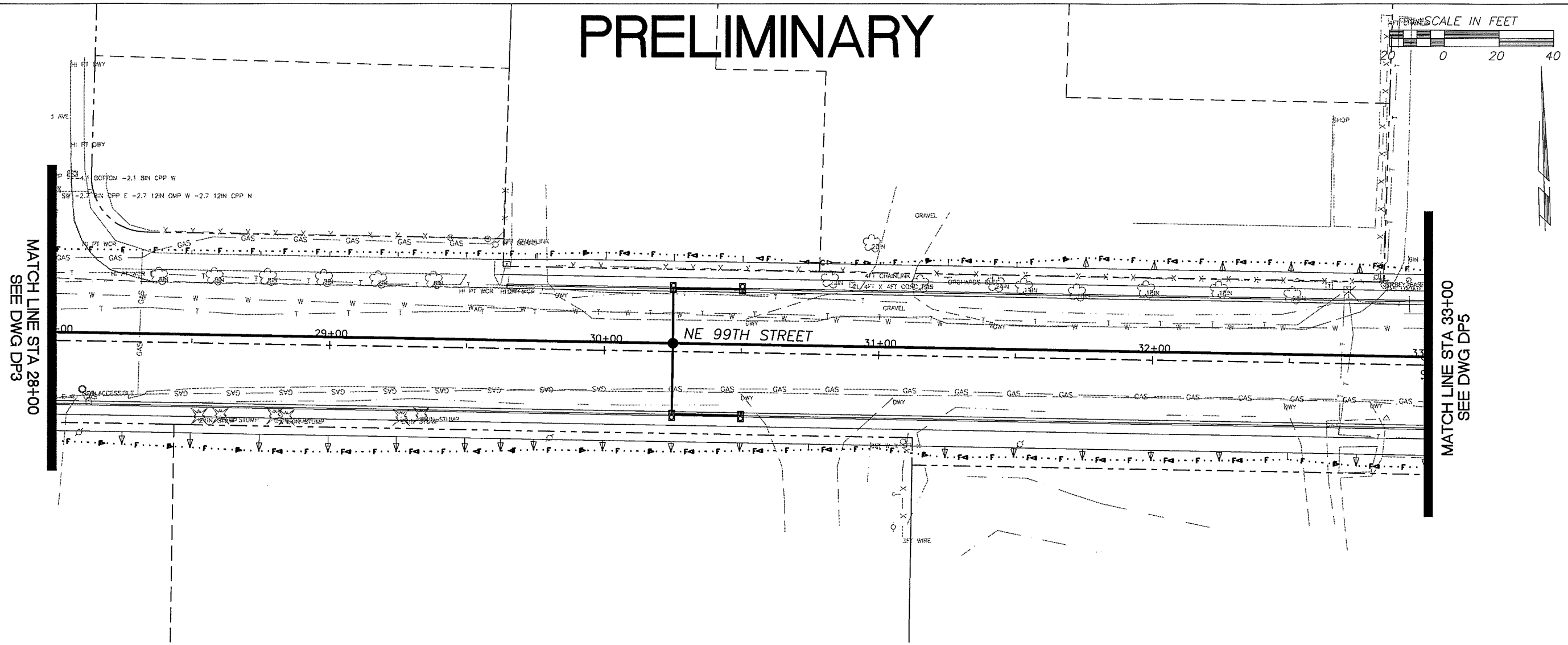

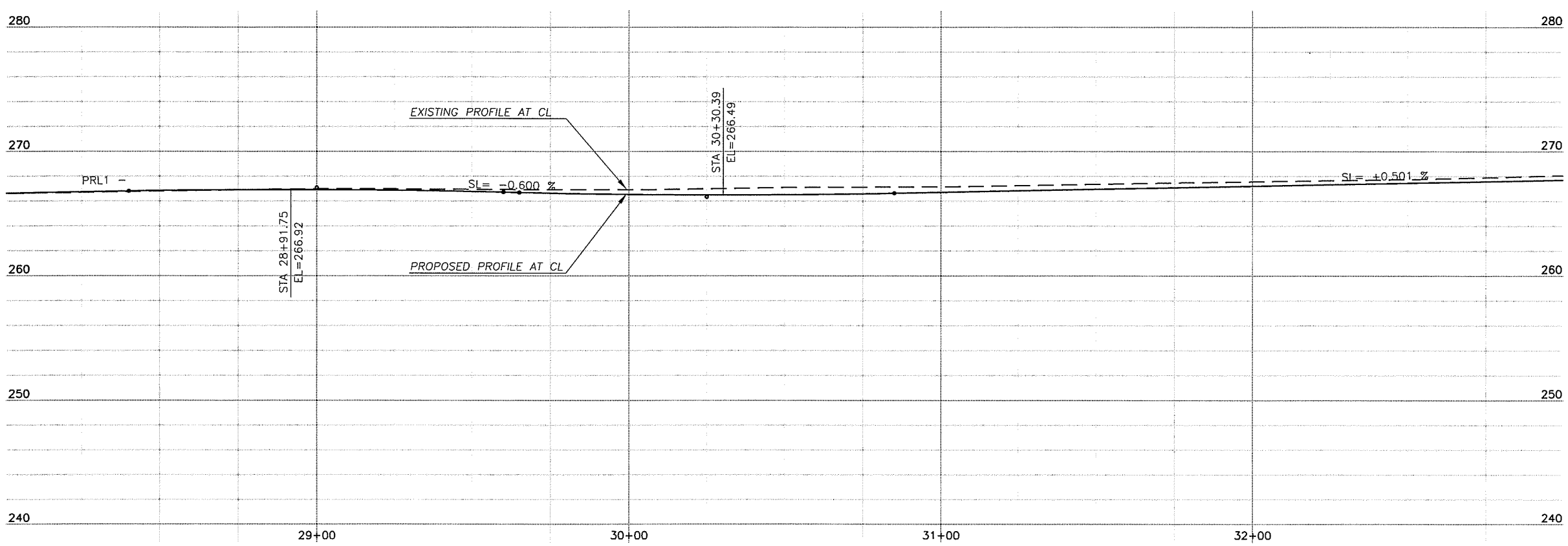

DESIGNED	BK
DRAWN	RK
CRP	330522
HOR.	1"=20'
VERT.	1"=5'
DATE	1/28/04
DWG:	DP4
SHEET	OF

CALL 48 HOURS BEFORE YOU DIG
1-800-553-4344
"It's the Law"
NORTHWEST UTILITIES NOTIFICATION CENTER

STATE OF WASHINGTON
RICHARD A. KOLKS
29868
REGISTERED PROFESSIONAL ENGINEER
EXPIRES APRIL 7, 2005

DESIGN & ENGINEERING DIVISION
DESIGN SECTION

NE 99TH STREET
DRAINAGE PLAN STA 28+00 TO 33+00

proud past, promising future
CLARK COUNTY
WASHINGTON

N:\CIP\PROJECTS\330522-NE99thSt-117To137\DESIGN\DWGS\DP4.dwg, Layout1, 1/28/2004 4:34:19 PM, begleyk

CLARK COUNTY
WASHINGTON
proud past, promising future.

DESIGN & ENGINEERING DIVISION
DESIGN SECTION

NE 99TH STREET
DRAINAGE PLAN STA 33+00 TO 38+00

BRUCE A. KLUG
STATE OF WASHINGTON
REGISTERED PROFESSIONAL ENGINEER
35886
EXPIRES APRIL 7, 2005

CALL 48 HOURS BEFORE YOU DIG
1-800-553-4344
"It's the Law"
NORTHWEST UTILITIES NOTIFICATION CENTER

DESIGNED	BK
DRAWN	RK
CRP	330522
HOR.	1"=20'
VERT.	1"=5'
DATE	1/28/04
DWG:	DP5
SHEET	OF

PRELIMINARY

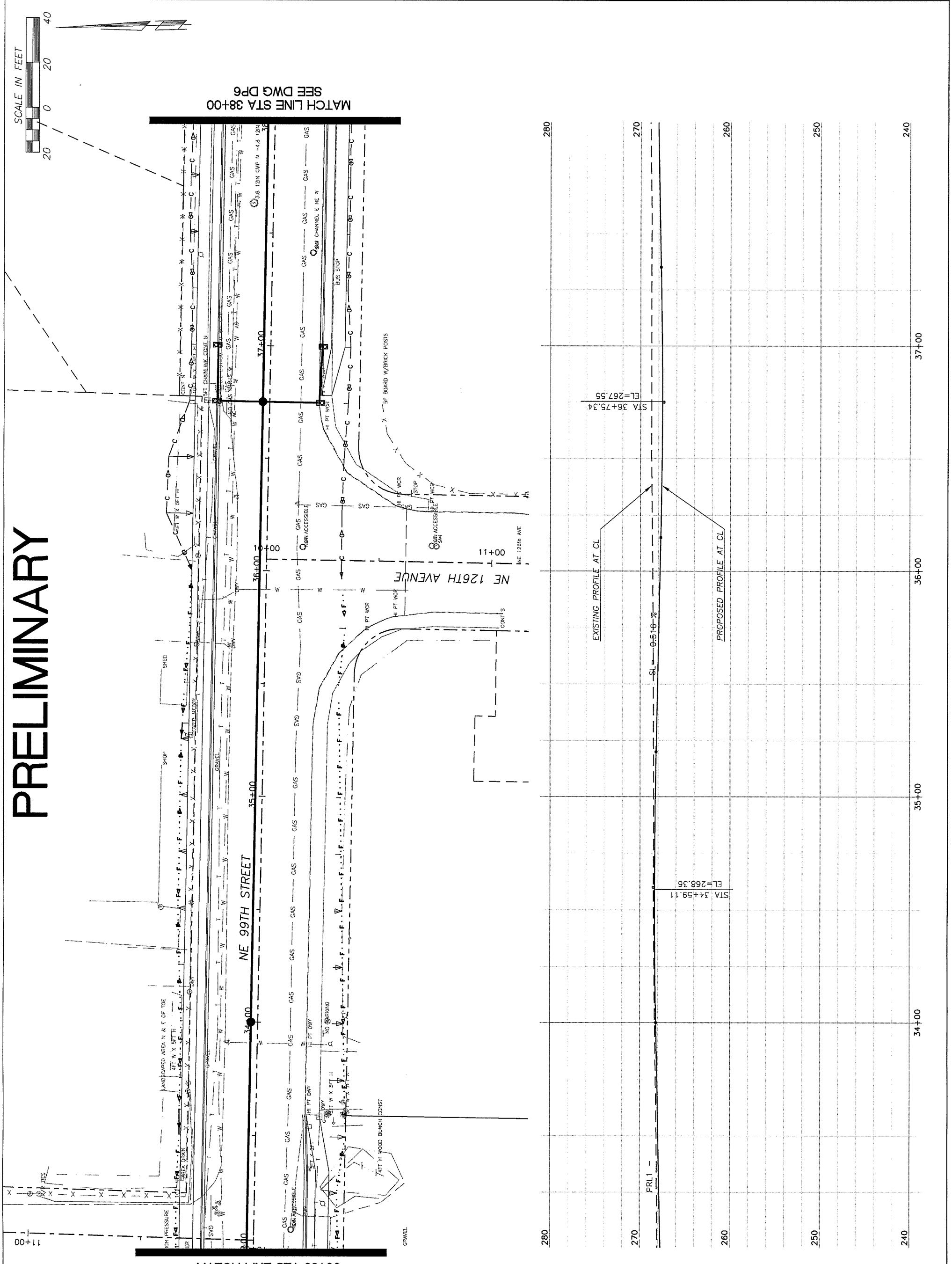

N:\CIP\PROJECTS\330522-NE99thSt-117To137\DESIGN\DWGS\DP5.dwg, Layout1, 1/28/2004 4:34:46 PM, begleyk

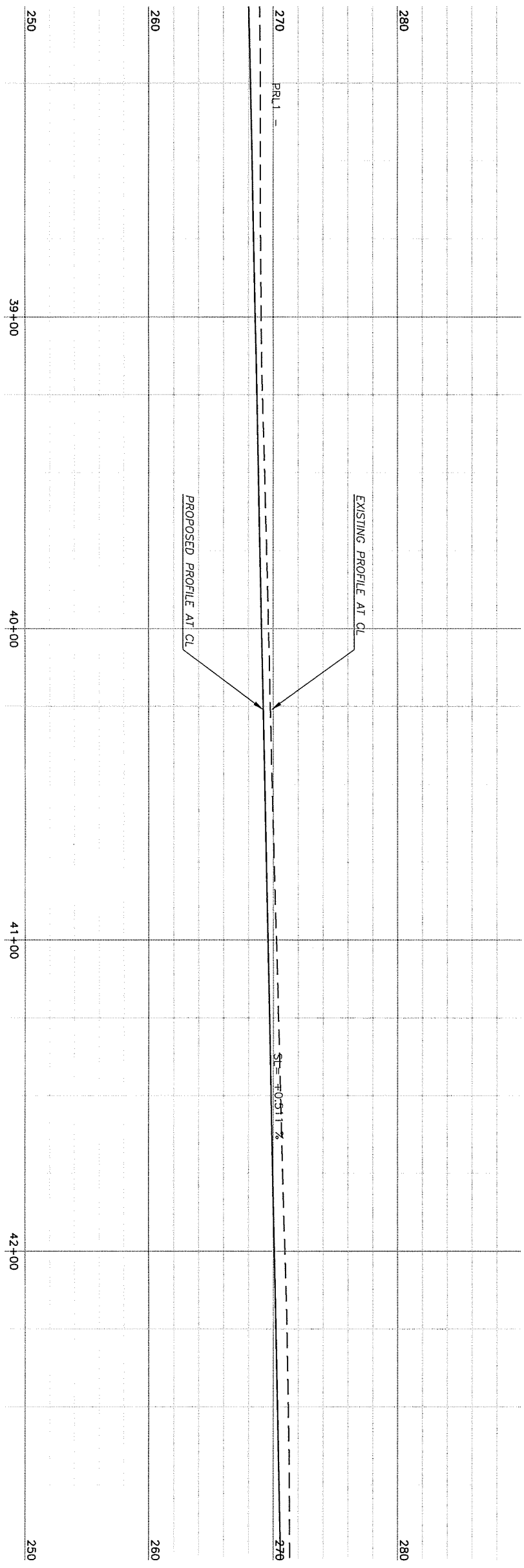

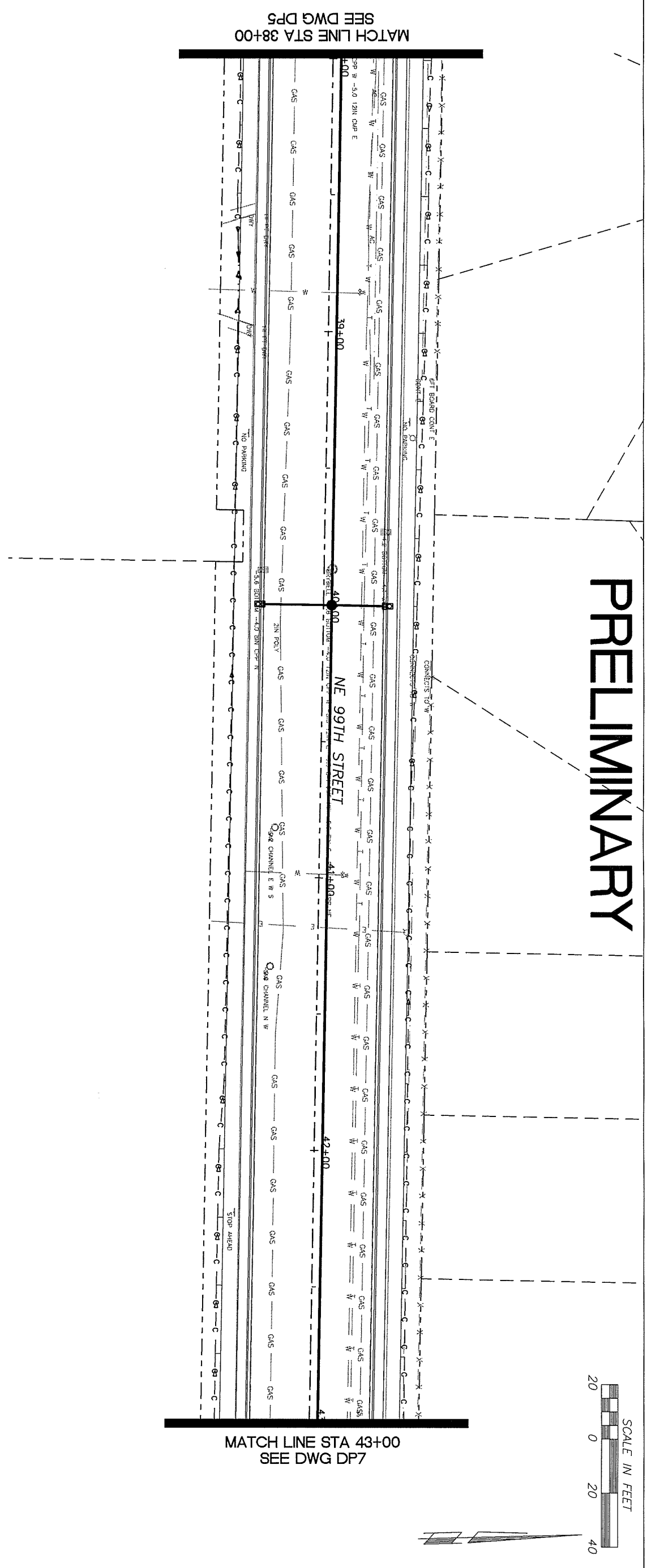

CLARK COUNTY
WASHINGTON
proud past, promising future

DESIGN & ENGINEERING DIVISION
DESIGN SECTION

NE 99TH STREET
DRAINAGE PLAN STA 38+00 TO 43+00

BRUCE A. KLUG
STATE OF WASHINGTON
39868
REGISTERED
PROFESSIONAL ENGINEER
EXPIRES: APRIL 7, 2005

CALL 48 HOURS BEFORE YOU DIG
1-800-553-4344
"It's the Law"
NORTHWEST UTILITIES NOTIFICATION CENTER

DESIGNED	BK
DRAWN	RK
CRP	330522
HOR.	1"=20'
VERT.	1"=5'
DATE	1/28/04
DWG:	DP6
SHEET	OF

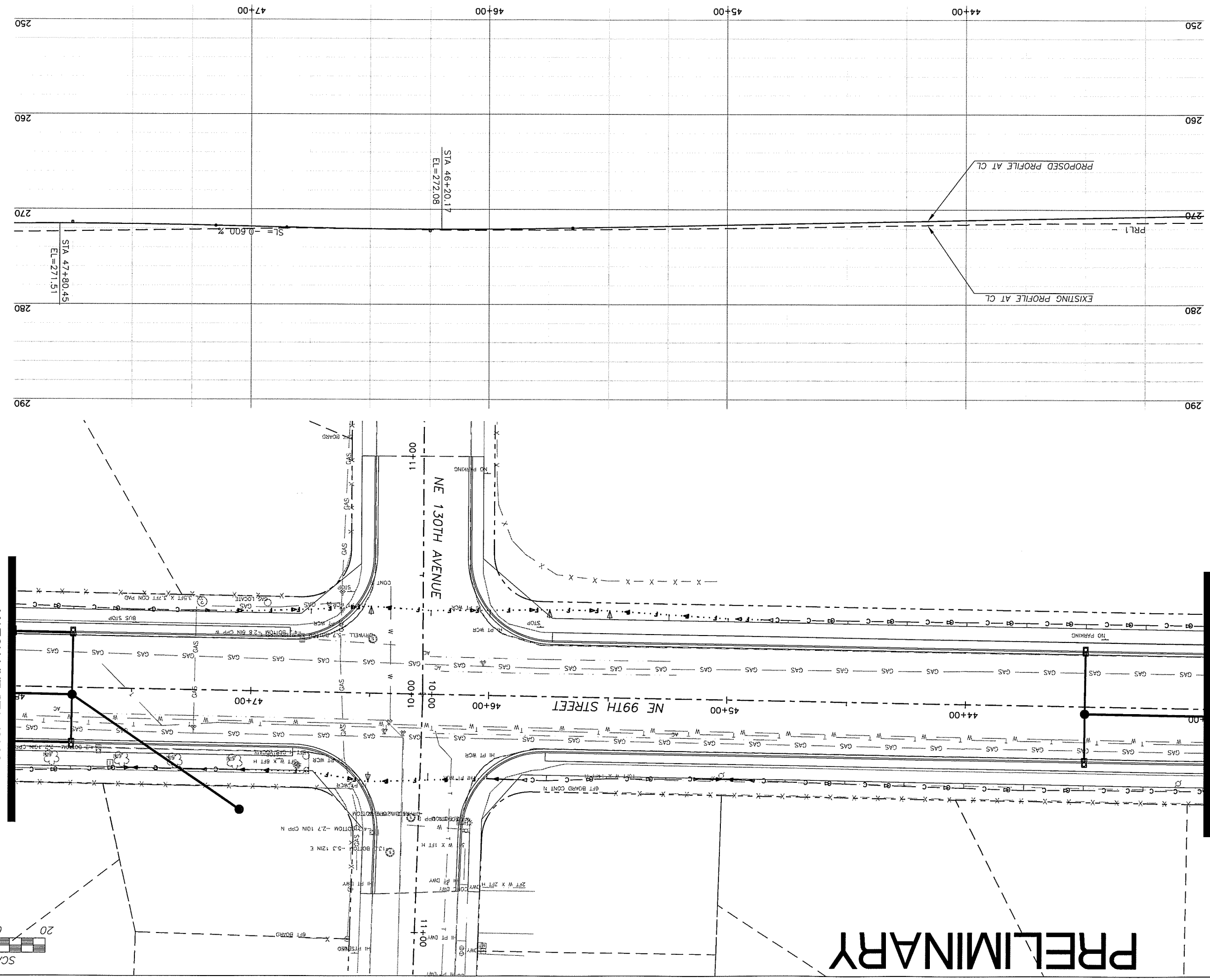

CLARK COUNTY
WASHINGTON
proud past, promising future

DESIGN & ENGINEERING DIVISION
DESIGN SECTION

NE 99TH STREET
DRAINAGE PLAN STA 43+00 TO 48+00

BRUCE A. KNUTSON
STATE OF WASHINGTON
26896
PROFESSIONAL ENGINEER
EXPIRES APRIL 7, 2005

CALL 48 HOURS BEFORE YOU DIG
1-800-553-4344
"It's the Law"
NORTHWEST UTILITIES NOTIFICATION CENTER

DESIGNED	BK
DRAWN	RK
CRP	330522
HOR.	1"=20'
VERT.	1"=5'
DATE	1/28/04
DWG:	DP7
SHEET	OF

N:\CIP\PROJECTS\330522-NE99thSt-117To137\DESIGN\DWGS\DP7.dwg, Layout1, 1/28/2004 4:35:35 PM, begleyk

PRELIMINARY

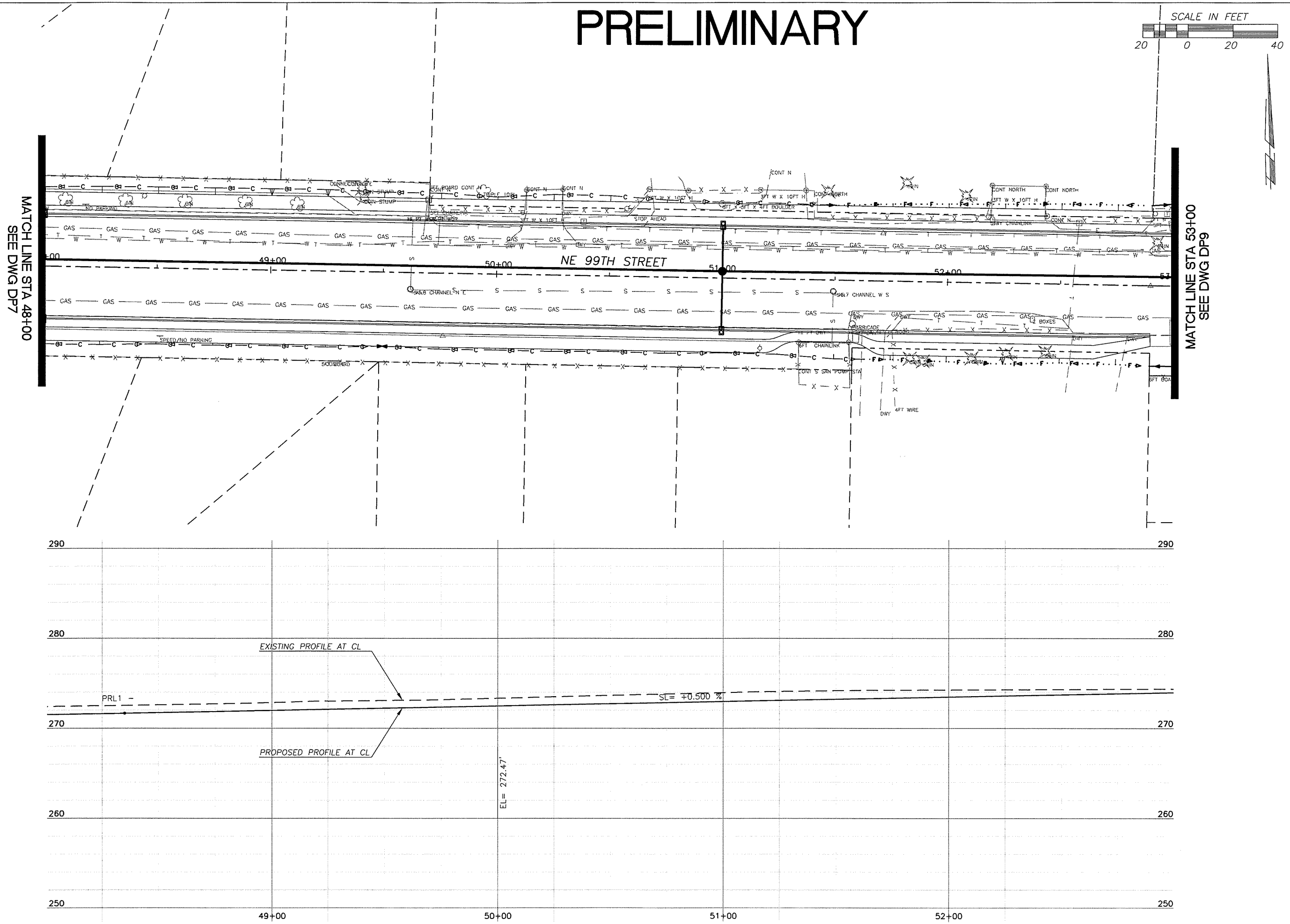

DESIGNED	BK
DRAWN	RK
CRP	330522
HOR.	1"=20'
VERT.	1"=5'
DATE	1/28/04
DWG:	DP8
SHEET	OF

CALL 48 HOURS BEFORE YOU DIG
1-800-553-4344
"It's the Law"
NORTHWEST UTILITIES NOTIFICATION CENTER

STATE OF WASHINGTON
JOSEPH A. KILIC
35868
REGISTERED PROFESSIONAL ENGINEER
EXPIRES APRIL 7, 2005

DESIGN & ENGINEERING DIVISION
DESIGN SECTION

NE 99TH STREET
DRAINAGE PLAN STA 48+00 TO 53+00

proud past, promising future
CLARK COUNTY WASHINGTON

N:\CIP\PROJECTS\330522-NE99thSt-117To137\DESIGN\DWGS\DP8.dwg, Layout1, 1/28/2004 4:36:57 PM, begleyk

PRELIMINARY

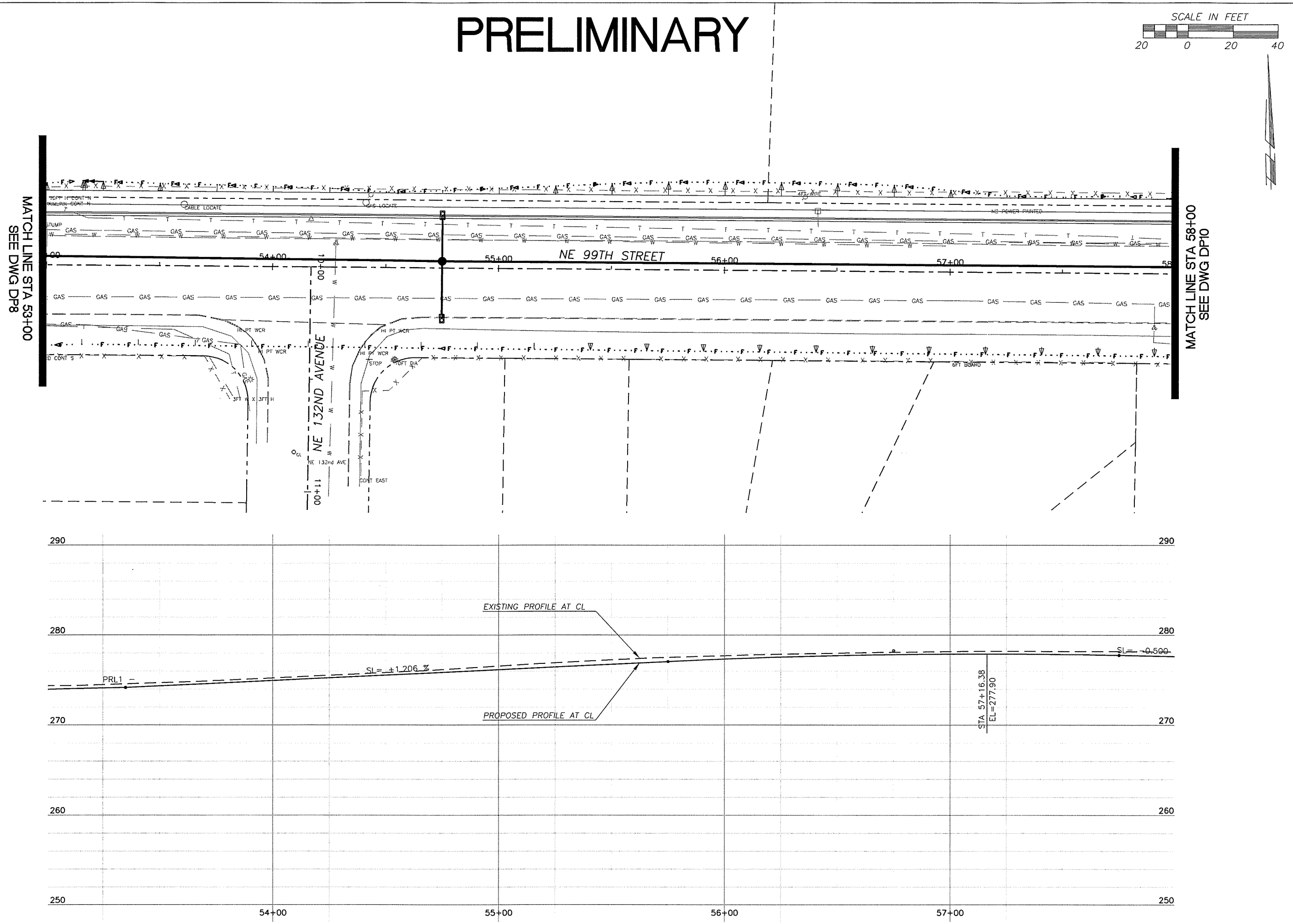

DESIGNED BK
DRAWN RK
CRP 330522
HOR. 1"=20'
VERT. 1"=5'
DATE 1/28/04
DWG: DP9
SHEET OF

CALL 48 HOURS BEFORE YOU DIG
1-800-553-4344
"It's the Law"
NORTHWEST UTILITIES NOTIFICATION CENTER

STATE OF WASHINGTON
JOSEPH A. KAY
38868
REGISTERED PROFESSIONAL ENGINEER
EXPIRES APRIL 7, 2005

DESIGN & ENGINEERING DIVISION
DESIGN SECTION

NE 99TH STREET
DRAINAGE PLAN STA 53+00 TO 58+00

proud past, promising future
CLARK COUNTY
WASHINGTON

N:\CIP\PROJECTS\330522-NE99thSt-117To137\DESIGN\DWGS\DP9.dwg, Layout1, 1/28/2004 4:37:18 PM, begleyk

PRELIMINARY

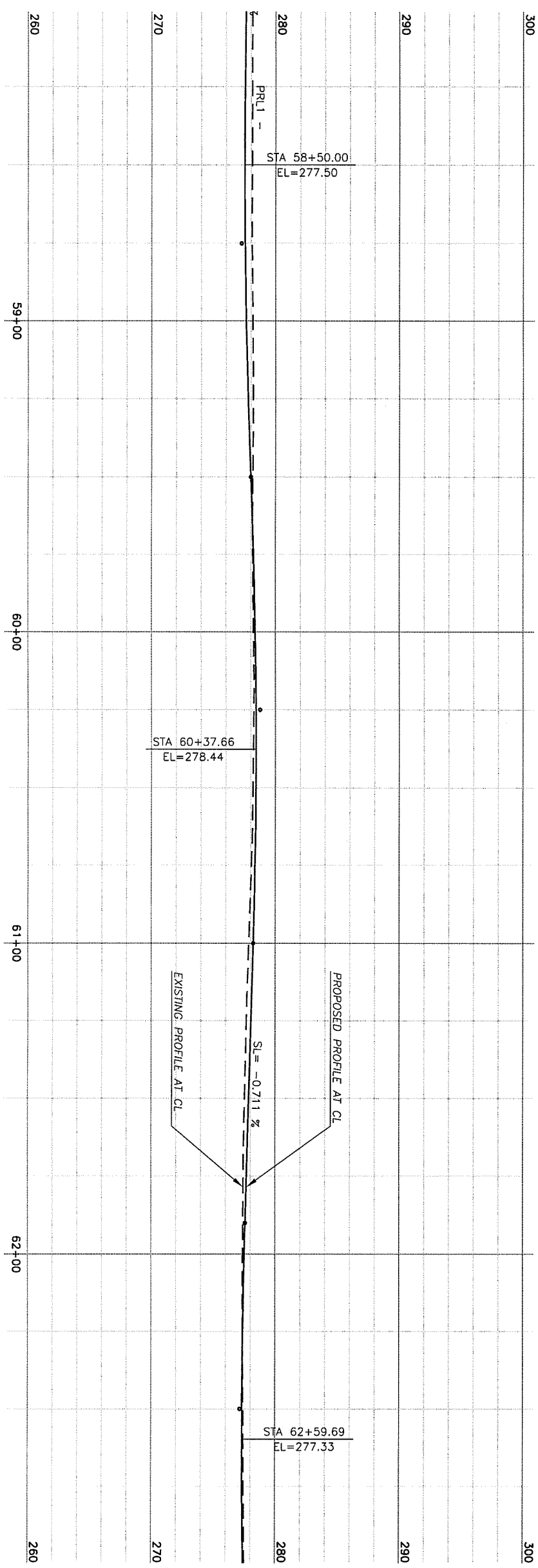

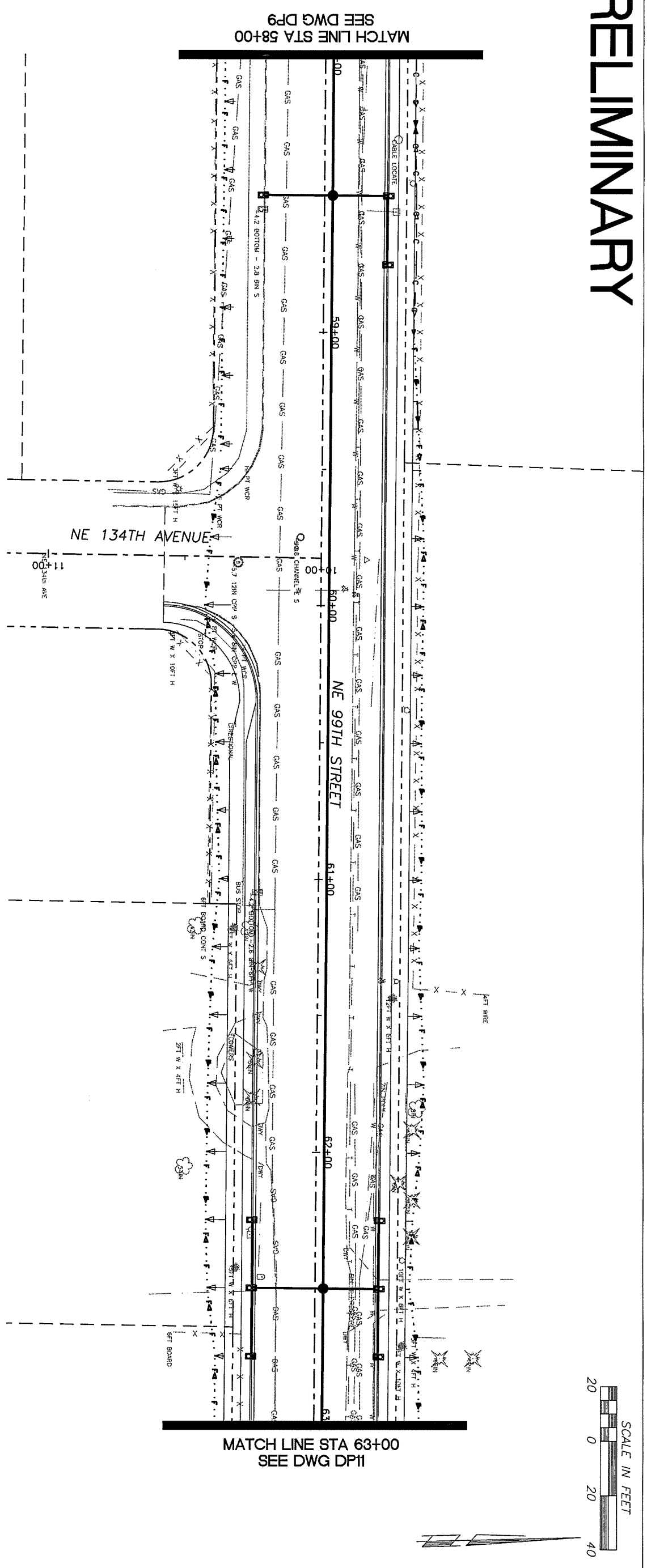

proud past, promising future

CLARK COUNTY
WASHINGTON

DESIGN & ENGINEERING DIVISION
DESIGN SECTION

NE 99TH STREET
DRAINAGE PLAN STA 58+00 TO 63+00

BRUCE A. KLUG
STATE OF WASHINGTON
39868
REGISTERED
PROFESSIONAL ENGINEER
EXPIRES: APRIL 7, 2005

CALL 48 HOURS BEFORE YOU DIG
1-800-553-4344
"It's the Law"
NORTHWEST UTILITIES NOTIFICATION CENTER

DESIGNED	BK
DRAWN	RK
CRP	330522
HOR.	1"=20'
VERT.	1"=5'
DATE	1/28/04
DWG:	DP10
SHEET	OF

PRELIMINARY

SCALE IN FEET
20 0 20 40

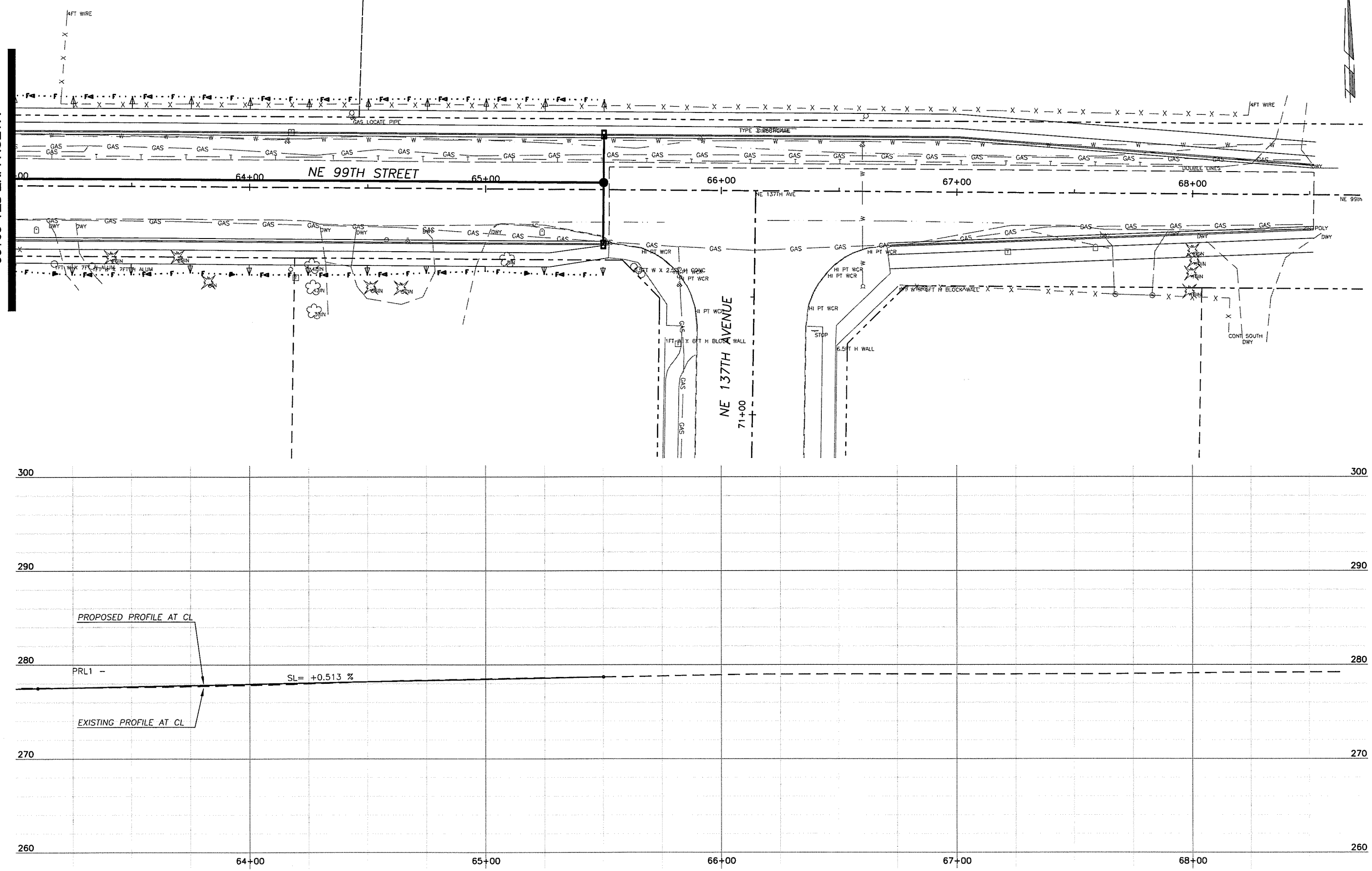

DESIGNED	BK
DRAWN	RK
CRP	330522
HOR.	1"=20'
VERT.	1"=5'
DATE	1/28/04
DWG:	DP11
SHEET	OF

CALL 48 HOURS BEFORE YOU DIG
1-800-553-4344
"It's the Law"
NORTHWEST UTILITIES NOTIFICATION CENTER

STATE OF WASHINGTON
39868
REGISTERED PROFESSIONAL ENGINEER
EXPIRES APRIL 7, 2005

DESIGN & ENGINEERING DIVISION
DESIGN SECTION

NE 99TH STREET
DRAINAGE PLAN STA 63+00 TO EOP

proud past, promising future
CLARK COUNTY WASHINGTON

N:\CIP\PROJECTS\330522-NE99thSt-117To137\DESIGN\DWGS\DP11.dwg, Layout1, 1/28/2004 4:41:32 PM, begleyk

N:\CIP\PROJECTS\330522-NE99thSt-117To137\DESIGN\DWGS\I01-.dwg, Layout1, 1/28/2004 4:42:22 PM, begleyk

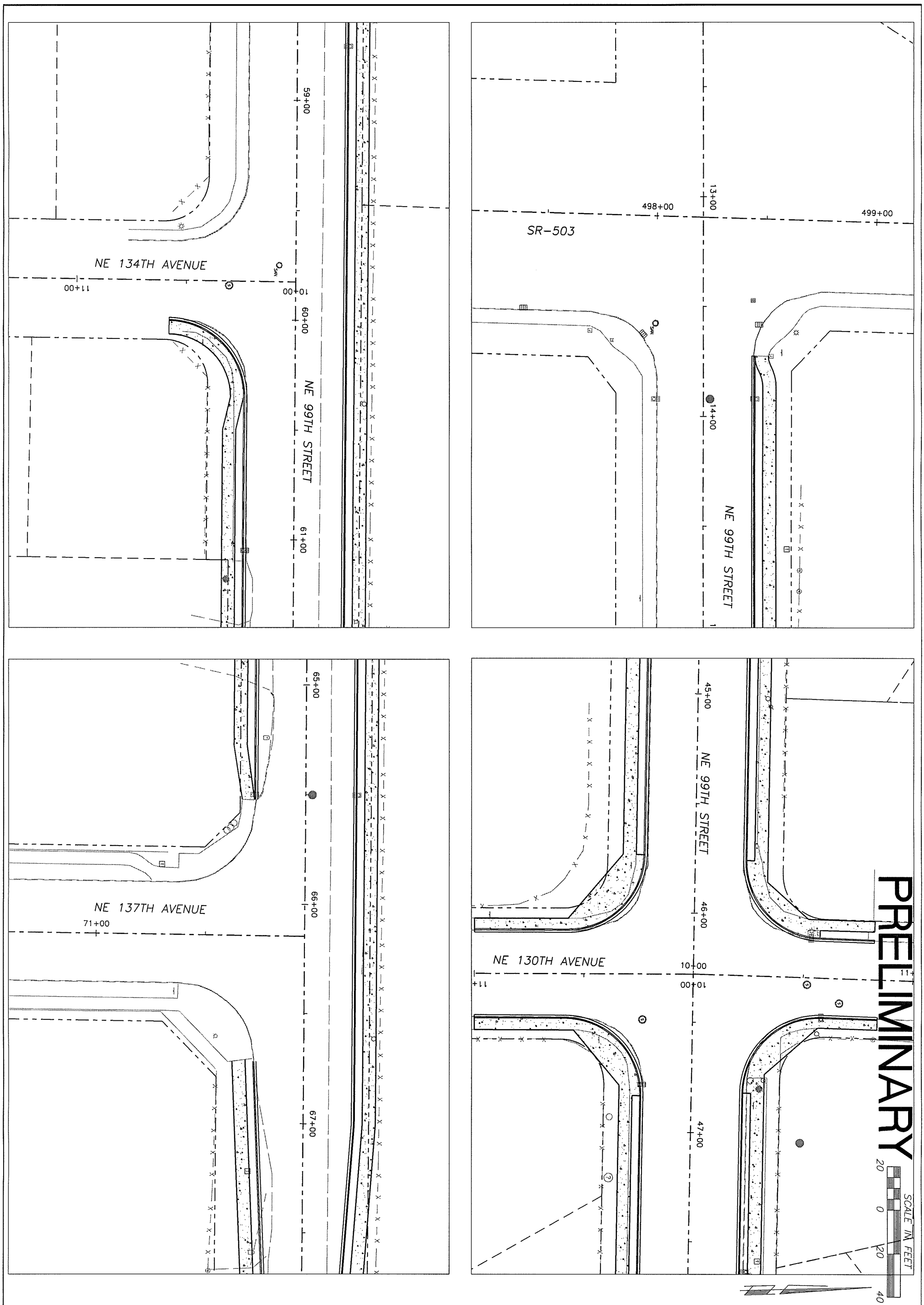

CLARK COUNTY
WASHINGTON
proud past, promising future

DESIGN & ENGINEERING DIVISION
DESIGN SECTION

NE 99TH STREET
INTERSECTION PLAN

BRUCE A. KLUG
STATE OF WASHINGTON
39868
REGISTERED
PROFESSIONAL ENGINEER
EXPIRES:APRIL 7, 2005

CALL 48 HOURS BEFORE YOU DIG
1-800-553-4344
"It's the Law"
NORTHWEST UTILITIES NOTIFICATION CENTER

DESIGNED	BK
DRAWN	RK
CRP	330522
HOR.	1"=20'
VERT.	1"=5'
DATE	1/28/04
DWG:	I01
SHEET	OF