CAPITAL IMPROVEMENTS PROGRAM
COUNTY ROAD PROJECT #301422

ST. JOHNS ROAD

NE 50TH AVENUE TO NE 72ND AVENUE

PLANS FOR THE CONSTRUCTION OF
ROADWAYS AND STORM DRAINAGE

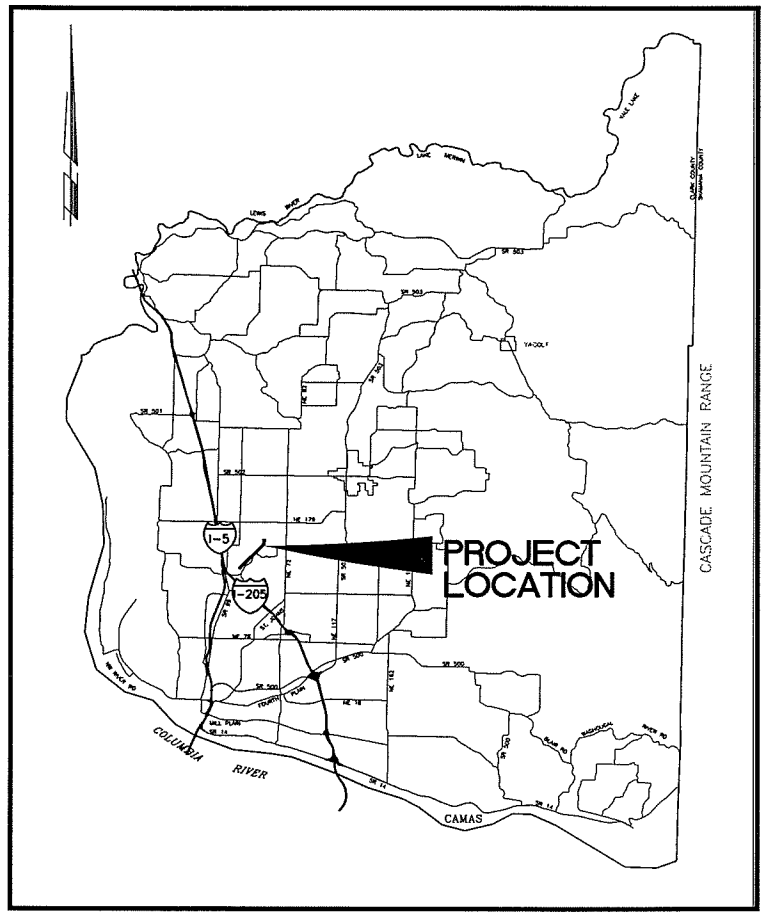

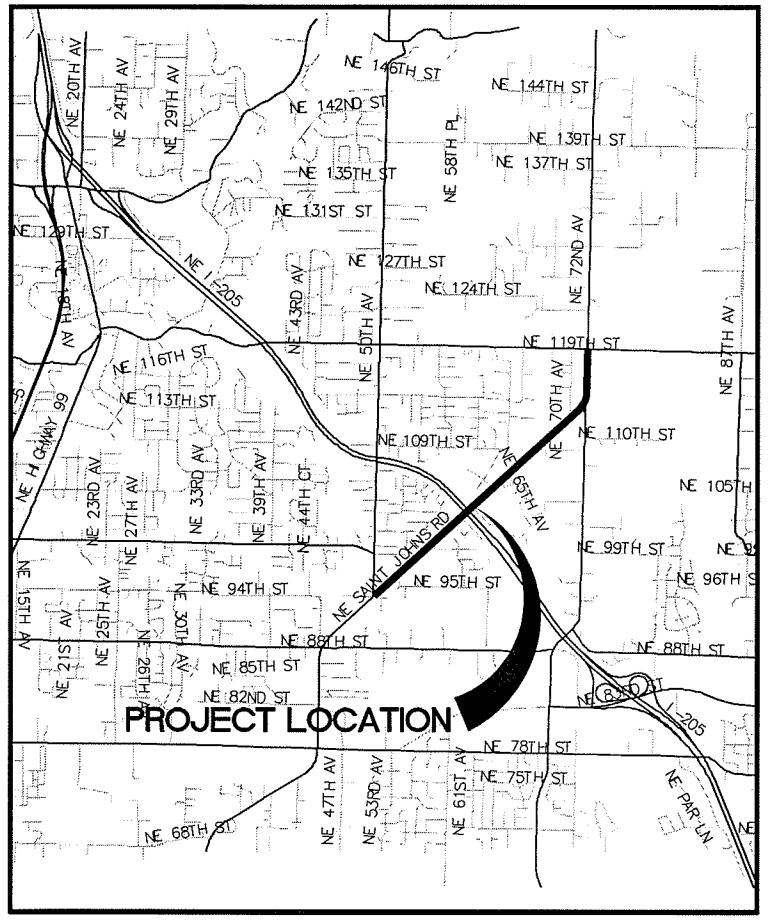

INDEX OF SHEETS

1	CV1	COVER SHEET
2	SQ1	SUMMARY OF QUANTITIES AND LEGEND
3	LAY1	SHEET LAYOUT
4	TS1	TYPICAL SECTIONS
5	TS2	TYPICAL SECTIONS
6	HV1	HORIZONTAL AND VERTICAL CONTROL
7	EC1	EROSION CONTROL PLAN
8	EC2	EROSION CONTROL PLAN
9	EC3	EROSION CONTROL PLAN
10	EC4	EROSION CONTROL DETAILS
11	SWF1	STORMWATER FACILITY NO.1
12	SWF1A	STORMWATER FACILITY NO.1: STAKING PLAN
13	SWF2	STORMWATER FACILITY #2
14	SWF2A	STORMWATER FACILITY #2: STAKING PLAN
15	SWF3	STORMWATER FACILITY #3
16	SWF3A	STORMWATER FACILITY #3: STAKING PLAN
17	WMA1	WETLAND MITIGATION AREA #1
18	WMA1A	WETLAND MITIGATION AREA #1: STAKING PLAN
19	WMA1B	WETLAND MITIGATION AREA #1: PLANTING PLAN
20	WMA2	WETLAND MITIGATION AREA #2
21	WMA2A	WETLAND MITIGATION AREA #2: STAKING PLAN
22	SWF2B	WETLAND MITIGATION AREA #2: PLANTING PLAN
23	WMA3	WETLAND MITIGATION AREA #3
24	WMA3A	WETLAND MITIGATION AREA #3: STAKING PLAN
25	WMA3B	WETLAND MITIGATION AREA #3: PLANTING PLAN
26	RD1	ROADWAY DETAILS
27	RD2	ROADWAY DETAILS
28	DD1	DRAINAGE DETAILS I
29	DD2	DRAINAGE DETAILS II
30	DD3	DRAINAGE DETAILS III
31	DD4	DRAINAGE DETAILS IV
32	DD5	DRAINAGE DETAILS V
33	DD6	DRAINAGE DETAILS VI
34	DSC1	STREAM CROSSING DETAILS I
35	DSC2	STREAM CROSSING DETAILS II
36	DWM1	TYPICAL SECTIONS; WETLAND MITIGATION AREAS
37	DWM2	WETLAND MITIGATION AREA DETAILS I
38	W01	RETAINING WALLS
39	W02	RETAINING WALL DETAILS
40	W03	RETAINING WALL DETAILS
41	W04	RETAINING WALL DETAILS
42	PP1	PLAN & PROFILE NE ST. JOHNS (BOP TO STA 16+00)
43	PP2	PLAN & PROFILE NE ST. JOHNS (STA 16+00 TO STA 21+00)
44	PP3	PLAN & PROFILE NE ST. JOHNS (STA 21+00 TO STA 26+00)
45	PP4	PLAN & PROFILE NE ST. JOHNS (STA 26+00 TO STA 31+00)
46	PP5	PLAN & PROFILE NE ST. JOHNS (STA 31+00 TO STA 36+00)
47	PP6	PLAN & PROFILE NE ST. JOHNS (STA 36+00 TO STA 41+00)
48	PP7	PLAN & PROFILE NE ST. JOHNS (STA 41+00 TO STA 46+00)
49	PP8	PLAN & PROFILE NE ST. JOHNS (STA 46+00 TO STA 51+00)
50	PP9	PLAN & PROFILE NE ST. JOHNS (STA 51+00 TO STA 56+00)
51	PP10	PLAN & PROFILE NE ST. JOHNS (STA 56+00 TO STA 61+00)
52	PP11	PLAN & PROFILE NE ST. JOHNS (STA 61+00 TO STA 66+00)
53	PP12	PLAN & PROFILE NE ST. JOHNS (STA 66+00 TO STA 71+00)
54	PP13	PLAN & PROFILE NE ST. JOHNS (STA 71+00 TO STA 76+00)
55	PP14	PLAN & PROFILE NE ST. JOHNS (STA 76+00 TO STA 81+00)
56	PP15	PLAN & PROFILE NE ST. JOHNS (STA 81+00 TO STA 86+00)
57	PP16	PLAN & PROFILE NE ST. JOHNS (STA 86+00 TO STA 91+00)
58	PP17	PLAN & PROFILE NE ST. JOHNS (STA 91+00 TO STA 96+00)
59	PP18	PLAN & PROFILE NE ST. JOHNS (STA 96+00 TO EOP)
60	PP19	PLAN & PROFILE NE 53RD AVENUE (STA 0+00 TO STA 3+00)
61	PP20	PLAN & PROFILE NE 65TH AVENUE (STA 0+00 TO STA 1+50)
62	PP21	PLAN & PROFILE NE 99TH STREET (STA 0+00 TO STA 3+00)
63	PP22	PLAN & PROFILE NE 109TH STREET (STA 10+00 TO STA 15+00)
64	PP23	PLAN & PROFILE NE 109TH STREET (STA 15+00 TO STA 18+00)
65	PP24	PLAN & PROFILE NE 72ND AVENUE (STA 10+00 TO 15+00)
66	PP25	PLAN & PROFILE NE 72ND AVENUE (STA 15+00 TO ??+00)
67	PP26	PLAN & PROFILE NE ST. JOHNS (STA 15+00 TO 10+00)
68	DWY1	DRIVEWAY PLAN
69	DWY2	DRIVEWAY PLAN
70	DP1	DRAINAGE PLAN NE ST. JOHNS (BOP TO STA 16+00)
71	DP2	DRAINAGE PLAN NE ST. JOHNS (STA 16+00 TO STA 21+00)
72	DP3	DRAINAGE PLAN NE ST. JOHNS (STA 21+00 TO STA 26+00)
73	DP4	DRAINAGE PLAN NE ST. JOHNS (STA 26+00 TO STA 31+00)
74	DP5	DRAINAGE PLAN NE ST. JOHNS (STA 31+00 TO STA 36+00)
75	DP6	DRAINAGE PLAN NE ST. JOHNS (STA 36+00 TO STA 41+00)
76	DP7	DRAINAGE PLAN NE ST. JOHNS (STA 41+00 TO STA 46+00)
77	DP8	DRAINAGE PLAN NE ST. JOHNS (STA 46+00 TO STA 51+00)
78	DP9	DRAINAGE PLAN NE ST. JOHNS (STA 51+00 TO STA 56+00)
79	DP10	DRAINAGE PLAN NE ST. JOHNS (STA 56+00 TO STA 61+00)
80	DP11	DRAINAGE PLAN NE ST. JOHNS (STA 61+00 TO STA 66+00)
81	DP12	DRAINAGE PLAN NE ST. JOHNS (STA 66+00 TO STA 71+00)
82	DP13	DRAINAGE PLAN NE ST. JOHNS (STA 71+00 TO STA 76+00)
83	DP14	DRAINAGE PLAN NE ST. JOHNS (STA 76+00 TO STA 81+00)
84	DP15	DRAINAGE PLAN NE ST. JOHNS (STA 81+00 TO STA 86+00)
85	DP16	DRAINAGE PLAN NE ST. JOHNS (STA 86+00 TO STA 91+00)
86	DP17	DRAINAGE PLAN NE ST. JOHNS (STA 91+00 TO STA 96+00)
87	DP18	DRAINAGE PLAN NE ST. JOHNS (STA 96+00 TO EOP)
88	DP19	DRAINAGE PLAN NE 53RD AVENUE (STA 0+00 TO STA 3+00)
89	DP20	DRAINAGE PLAN NE 65TH AVENUE (STA 0+00 TO STA 1+50)
90	DP21	DRAINAGE PLAN NE 99TH STREET (STA 0+00 TO STA 3+00)
91	DP22	DRAINAGE PLAN NE 109TH STREET (STA 10+00 TO STA 15+00)
92	DP23	DRAINAGE PLAN NE 109TH STREET (STA 15+00 TO STA 18+00)
93	DP24	DRAINAGE PLAN NE 72ND AVENUE (STA 10+00 TO STA 15+00)
94	DP25	DRAINAGE PLAN NE 72ND AVENUE (STA 15+00 TO STA 20+00)
95	DP26	DRAINAGE PLAN NE 50TH TO NE 72ND (STA 15+00 TO STA 18+00)
96	DP101	DRAINAGE PLAN NE 110TH STREET (STA 0+00 TO STA 5+00)
97	DP102	DRAINAGE PLAN NE 110TH STREET (STA 5+00 TO STA 10+00)
98	DP103	DRAINAGE PLAN NE 110TH STREET (STA 10+00 TO STA 15+00)
99	DP104	DRAINAGE PLAN NE 110TH STREET (STA 15+00 TO STA 20+00)
100	DP105	DRAINAGE PLAN NE 110TH STREET (STA 20+00 TO STA 23+00)
101	DP106	DRAINAGE PLAN NE 110TH STREET (STA 23+00 TO STA 28+00)
102	DP107	DRAINAGE PLAN NE 110TH STREET (STA 28+00 TO STA 33+00)
103	DP201	LALONDE CREEK CULVERT #1 (BOX CULVERT)
104	DP202	LALONDE CREEK CULVERT #2
105	I01	INTERSECTION PLAN
106	I02	INTERSECTION PLAN
107	STR1	SIGNING & STRIPING PLAN
108	STR2	SIGNING & STRIPING PLAN
109	STR3	INTERIM INTERSECTION STRIPING PLAN
110	STR4	INTERSECTION SIGNING & STRIPING
111	TS1	TRAFFIC SIGNAL PLAN
112	TS2	SIGNAL POLE DETAILS
113	TS3	DETECTOR LOGIC SCHEMATIC
114	TS4	SIGNAL SYSTEM DETAILS
115	B01	RETAINING WALL 1
116	B02	RETAINING WALL 1 AND 2
117	B03	RETAINING WALL 3
118	B04	RETAINING WALL 4
119	B05	RETAINING WALL 5
120	B06	RETAINING WALL 6
121	B07	RETAINING WALL 7
122	B08	RETAINING WALL SECTIONS 1
123	B09	RETAINING WALL SECTIONS 2
124	B10	RETAINING WALL SECTIONS 3
125	B11	SOUNDWALL PLAN AND ELEVATIONS SOUNDWALL #1
126	B12	SOUNDWALL PLAN AND ELEVATIONS SOUNDWALL #2
127	B13	SOUNDWALL PLAN AND ELEVATIONS SOUNDWALL #2
128	B14	SOUNDWALL PLAN AND ELEVATIONS SOUNDWALL #2
129	B15	SOUNDWALL PLAN AND ELEVATIONS SOUNDWALL #3
130	B16	SOUNDWALL PLAN AND ELEVATIONS SOUNDWALL #3
131	B17	SOUNDWALL PLAN AND ELEVATIONS SOUNDWALL #4
132	B18	SOUNDWALL PLAN AND ELEVATIONS SOUNDWALL #4
133	B19	SOUNDWALL PLAN AND ELEVATIONS SOUNDWALL #5
134	B20	SOUNDWALL PLAN AND ELEVATIONS SOUNDWALL #5
135	B21	SOUNDWALL PLAN AND ELEVATIONS SOUNDWALL #5
136	B22	SOUNDWALL PLAN AND ELEVATIONS SOUNDWALL #6
137	B23	SOUNDWALL PLAN AND ELEVATIONS SOUNDWALL #7
138	B24	SOUNDWALL PLAN AND ELEVATIONS SOUNDWALL #7
139	B25	RETAINING WALL PLAN AND ELEVATIONS SOUNDWALL #7
140	B26	SOUNDWALL DETAIL AND GENERAL NOTES
141	LD1	LANDSCAPE PLAN
142	LD2	LANDSCAPE PLAN
143	LD3	LANDSCAPE PLAN
144	LD4	LANDSCAPE PLAN
145	LD5	LANDSCAPE PLAN
146	LD6	LANDSCAPE PLAN
147	LD7	LANDSCAPE PLAN
148	LD8	LANDSCAPE PLAN
149	LD9	LANDSCAPE PLAN
150	LD10	LANDSCAPING DETAILS

COMMISSIONERS:

BETTY SUE MORRIS, Chair
JUDIE STANTON, Commissioner
CRAIG A. PRIDEMORE, Commissioner

CLARK COUNTY WASHINGTON
proud past, promising future

DEPARTMENT OF
PUBLIC WORKS

DESIGN AND ENGINEERING DIVISION- DESIGN SECTION

PRELIMINARY

Quality Assurance	Project Manager	Public Works Director/ County Engineer
DATE: Larry Maddux, P.L.S.	DATE: Carolyn Heniges, P.E., P.L.S.	DATE: Peter Capell, P.E.

90% PLANS

CLARK COUNTY WASHINGTON
proud past, promising future

Recommended for Approval

Grading _____ Erosion _____

Storm Water Plan _____

Development Review Manager _____ Date

N:\CIP\PROJECTS\301422-STJohns-50thTo72nd\DESIGN\DWGS\STJcov.dwg, Layout1, 3/30/2004 10:31:58 AM, BEGLEYK

SUMMARY OF QUANTITIES

QUANT	UNIT	BID ITEM DESCRIPTION
1	L.S.	MOBILIZATION
1	EST.	MINOR CHANGE
8400	HOUR	TRAFFIC CONTROL LABOR
450	HOUR	TRAFFIC CONTROL SUPERVISOR
1	L.S.	TEMPORARY TRAFFIC CONTROL DEVICES
200	S.F.	CONSTRUCTION SIGNS CLASS "A"
100	L.F.	TYPE III BARRICADE
1	L.S.	CLEARING AND GRUBBING
1	EST.	ROADSIDE CLEANUP-FORCE ACCOUNT
1	L.S.	REMOVAL OF STRUCTURES AND OBSTRUCTIONS
30640	C.Y.	ROADWAY EXCAVATION (INCL HAUL)
22150	C.Y.	EMBANKMENT COMPACTION
8000	C.Y.	UNSUITABLE FOUNDATION EXCAVATION (INCL. HAUL)
24628	TON	GRAVEL BORROW (INCL. HAUL)
1300	L.F.	SAWCUT EXISTING (ASPHALT) PAVEMENT
750	MGAL	WATER
20000	L.F.	CONSTRUCTION GEOTEXTILE FOR TEMPORARY SILT FENCE
46744	TON	CRUSHED SURFACING BASE COURSE
6400	TON	BALLAST (INCL. HAUL)
12935	TON	ASPHALT CONCRETE PAVEMENT CL. A
16629	TON	ASPHALT CONCRETE PAVEMENT CL. E
163	S.Y.	PLANING BITUMINOUS PAVEMENT
629	S.Y.	ASPHALT CONCRETE APPROACH CL A
1272	S.Y.	CEMENT CONCRETE APPROACH, 3-DAY
1000	S.F.	GEOGRID SOIL REINFORCEMENT FABRIC
4650	S.F.	MODULAR/SEGMENTAL BLOCK RETAINING WALL (INCL. CAP UNIT)
23760	S.F.	SOUND WALL
511	S.F.	CIP RETAINING/SOUND WALL
1058	S.F.	SOLDIER PILE RETAINING/SOUND WALL
1336	S.F.	WIRE MESH RETAINING/SOUND WALL
400	S.F.	BLOCK RETAINING/SOUND WALL
825	S.Y.	GEOGRID SOIL REINFORCEMENT FABRIC (FOR WALL)
13236	L.F.	TRENCH SAFETY SYSTEM
418	L.F.	DUCTILE IRON PIPE 10 IN. DIAM.
165	L.F.	DUCTILE IRON PIPE 12 IN. DIAM.
140	L.F.	ST. STR. PLATE PIPE ARCH, 12 GAGE, 6 FT. 1 IN. X 4 FT. 7 IN. SPAN
1	L.S.	DEWATERING, WMA 1
1	L.S.	DEWATERING, WMA2
1	L.S.	DEWATERING, WMA3
1	L.S.	DEWATERING, 110TH ST. STORM SEWER
1673	L.F.	STORM SEWER PIPE, 10 IN. DIAM.
2507	L.F.	STORM SEWER PIPE, 12 IN. DIAM.
1921	L.F.	STORM SEWER PIPE, 18 IN. DIAM.
905	L.F.	STORM SEWER PIPE, 24 IN. DIAM.
2210	L.F.	STORM SEWER PIPE, 30 IN. DIAM.
1897	L.F.	STORM SEWER PIPE, 36 IN. DIAM.
2625	L.F.	STORM SEWER PIPE, 42 IN. DIAM.
101	L.F.	CLASS V REINF. CONC. STORM SEWER PIPE, 42 IN. DIAM. (JACKED)
104	L.F.	BOX CULVERT 6FT X 6FT (DESIGN/BUILD)
10	EACH	MANHOLE 48 IN. DIAM. TYPE 1
16	EACH	MANHOLE 48 IN. DIAM. TYPE 3
6	EACH	MANHOLE 60 IN. DIAM. TYPE 3
24	EACH	MANHOLE 72 IN. DIAM. TYPE 1
14	EACH	MANHOLE 72 IN. DIAM. TYPE 3
1	EACH	MANHOLE 84 IN. DIAM. TYPE 2
22	EACH	CATCH BASIN
50	EACH	CONCRETE COMBINATION CURB INLET TYPE 1
15	EACH	CONCRETE COMBINATION CURB INLET TYPE 2
1	EACH	SIDEWALK CHASE
2	EACH	SPECIAL CURB INLET
1	EACH	CATCH BASIN TYPE 2
1	EACH	MODIFIED CATCH BASIN TYPE 2 (84 IN. DIAM, FLOW SPLITTER)
1	EACH	CONCRETE DITCH INLET
40	EACH	ADJUST MANHOLE/CATCH BASIN/INLET/DRYWELL METHOD 1
38	EACH	ADJUST WATER/GAS VALVE RIM, COVER & FRAME
109000	C.Y.	STORMWATER FACILITY EXCAVATION (INCL. HAUL)
46	ACRE	WETLAND PLANTING
19	C.Y.	REINFORCED CONCRETE FOR HEADWALL/WINGWALL STRUCTURE
18	C.Y.	STREAMBED ROCK
116	C.Y.	STREAMBED GRAVEL
20	L.F.	ROCK WEIRS
288	C.Y.	LIGHT, LOOSE RIPRAP
46780	S.F.	OPEN CELL SYSTEM AND POROUS PAVERS
4	ACRE	EROSION CONTROL SEEDING AND MULCHING
128	S.Y.	EROSION CONTROL BLANKET (PERMANENT)
2	EACH	STABILIZED CONSTRUCTION ENTRANCE
2	EACH	TIRE WASH
92	EACH	STORM DRAIN INLET PROTECTION
150	HOUR	EROSION PREVENTION AND SEDIMENT CONTROL LEAD
1	L.S.	SPILL PREVENTION PLAN
3520	C.Y.	COMPOST AMENDED TOPSOIL
880	C.Y.	BARK OR WOOD CHIP MULCH
1	L.S.	LANDSCAPE RESTORATION
75	EACH	PSIPE 1-3/4 IN. CALIPER TREES (Acer platanoides "Crimson Sentry")
90	EACH	PSIPE 1-3/4 IN. CALIPER TREES (Prunus subhirtella "Autumn Flowering Cherry")
1124	EACH	PSIPE - SHRUB, 1 GAL. (Spiraea japonica "Goldflame")
326	EACH	PSIPE - SHRUB, 1 GAL. (Pieris japonica "Forest Flame")
312	EACH	PSIPE - SHRUB, 2 GAL. (Viburnum davidii "David virburnum")
1100	EACH	PSIPE GROUNDCOVER 4 IN. POT (Arctostaphylos uva-ursi "Kinnikinnick")
10019	L.F.	CEMENT CONC. BARRIER CURB
18984	L.F.	CEMENT CONC. BARRIER CURB AND GUTTER
45	L.F.	EXTRUDED CURB, TYPE 6 (CEMENT CONCRETE)
1945	L.F.	TYPE C PRECAST TRAFFIC CURB
3412	L.F.	FENCE RELOCATION
6860	L.F.	COATED CHAIN LINK FENCE - TYPE 1
5	EACH	DOUBLE 14 FT. COATED CHAIN LINK GATE
12610	S.Y.	CEMENT CONCRETE SIDEWALK
17	EACH	MAILBOX SUPPORT, TYPE 1
1	EACH	MAILBOX SUPPORT, TYPE 2
1	EACH	TRAFFIC SIGNAL SYSTEM (ST. JOHNS RD/NE 72ND AVE)

LEGEND

- ROW LINE
- NEW EDGE OF PAVEMENT
- NEW CURB LINE
- NEW CENTER LINE
- NEW FENCE LINE
- NEW STORM DRAIN OR CULVERT
- NEW FILL LIMITS
- NEW CUT LIMITS
- SAWCUT LINE
- PERMANENT SLOPE EASEMENT
- NEW SILT FENCE
- EXISTING EDGE OF PAVEMENT
- EXISTING CURB LINE
- EXISTING CENTER LINE
- EXISTING FENCE LINE
- EXISTING TELEPHONE LINE
- EXISTING WATER LINE
- EXISTING UNDERGROUND ELECTRIC
- EXISTING SANITARY SEWER LINE
- EXISTING STORM DRAINAGE
- EXISTING GAS LINE
- EXISTING CULVERT
- EXISTING DITCH CENTER LINE
- EXISTING GUARDRAIL

SYMBOLS

- NEW CATCH BASIN (CB)
- NEW MANHOLE (MH)
- NEW CURB INLET (CI)
- NEW COMBINATION CURB INLET (CCI)
- NEW MAIL BOX
- NEW HANDICAP RAMP
- CURVE TABLE
- EXISTING TRANSFORMER
- EXISTING ELEC TOWER
- EXISTING SANITARY SEWER MH
- EXISTING FIRE HYDRANT
- EXISTING CLEAN OUT
- EXISTING GAS VALVE
- EXISTING WATER METER
- EXISTING WATER VALVE
- EXISTING SIGNAL POLE
- EXISTING TELEPHONE VAULT
- EXISTING TELEVISION BOX
- EXISTING WELL
- EXISTING BRUSH LINE
- EXISTING HEDGE
- EXISTING CURB INLET (CI)
- EXISTING CATCH BASIN (CB)
- EXISTING STORM MH
- EXISTING MISC MH
- EXISTING SHRUB
- EXISTING CONIFEROUS TREE
- EXISTING DECIDUOUS TREE
- EXISTING SIGN
- EXISTING DECIDUOUS TREE
- EXISTING J BOX
- EXISTING TELEPHONE MANHOLE
- EXISTING TELEPHONE POLE
- EXISTING LIGHT
- EXISTING GUY ANCHOR
- EXISTING POWER POLE
- EXISTING MAIL BOX
- EXISTING TELEPHONE PEDESTAL
- EXISTING SPRINKLER HEAD
- TRAVERSE POINT
- TEST HOLE

DESIGNED	MME
DRAWN	KMB
CRP	301422
HOR.	NA
VERT.	NA
DATE	6/24/03
DWG:	S01
SHEET	OF

CALL 48 HOURS BEFORE YOU DIG 1-800-553-4344 "It's the Law" NORTHWEST UTILITIES NOTIFICATION CENTER

STATE OF WASHINGTON MICHAEL M. SOLICH 29039 REGISTERED PROFESSIONAL ENGINEER EXPIRES: MAY 26, 2003

DESIGN & ENGINEERING DIVISION
DESIGN SECTION

ST. JOHNS RD (NE 50TH TO NE 72ND)
SUMMARY OF QUANTITIES AND LEGEND

proud past, promising future
CLARK COUNTY WASHINGTON

N:\CIP\PROJECTS\301422-STJohns-50thTo72nd\DESIGN\DWGS\SQ01.dwg, Layout1, 3/18/2004 4:17:48 PM, begleyk

LEGEND

PP5: PLAN & PROFILE/DRAINAGE PLAN AND PROFILE
DP101: DRAINAGE PLAN AND PROFILE (OUTFALL PIPE)
SWF2: PLAN; STORMWATER FACILITY
WMA2: PLAN; WETLAND MITIGATION AREA

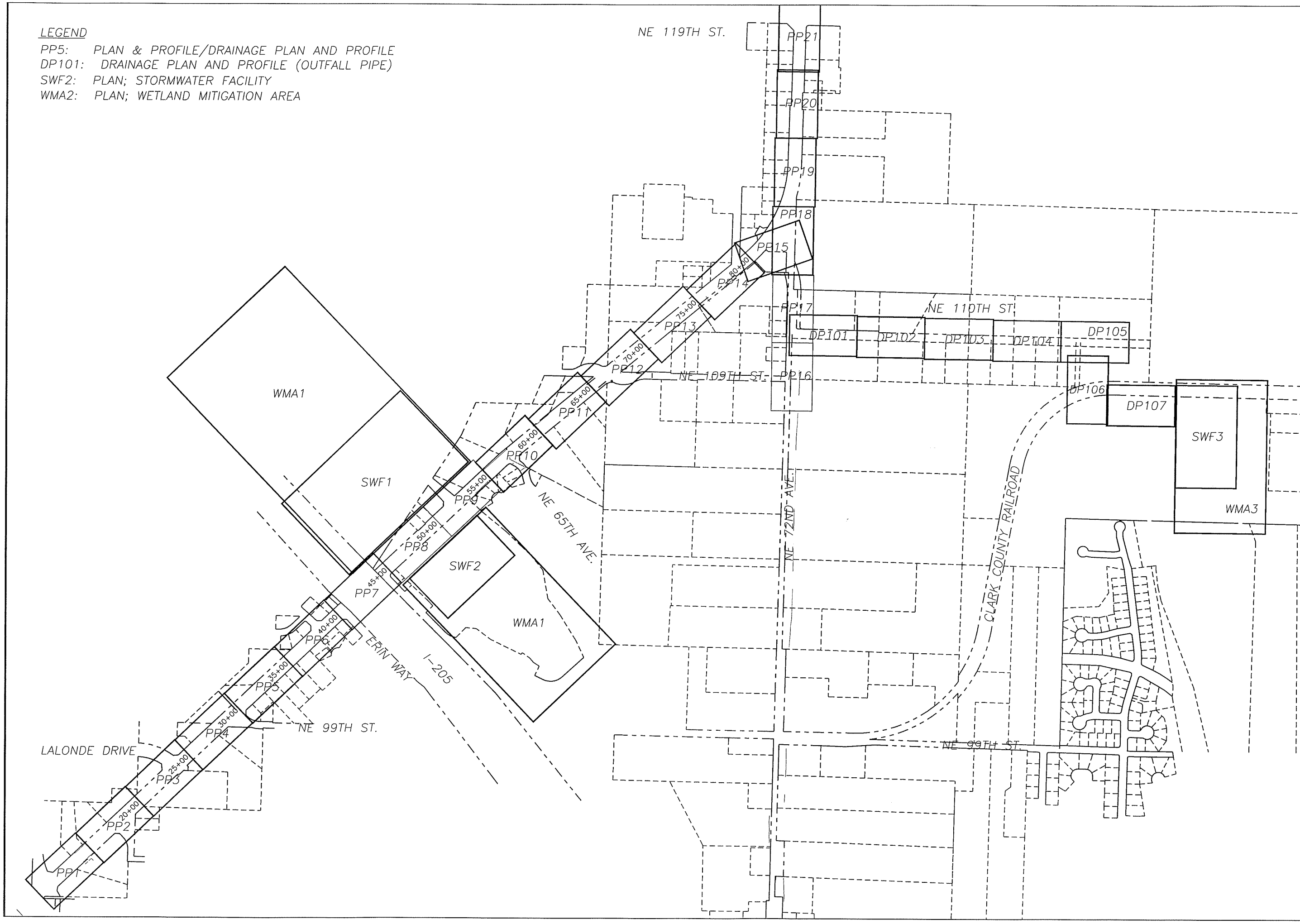

DESIGNED	MME/JM
DRAWN	KMB
CRP	301422
HOR.	1" = 300'
VERT.	NA
DATE	3/16/04
DWG:	LAY1
SHEET	OF

CALL 48 HOURS BEFORE YOU DIG
1-800-553-4344
"It's the Law"
NORTHWEST UTILITIES NOTIFICATION CENTER

MICHAEL M. KERRICK
STATE OF WASHINGTON
29035
REGISTERED PROFESSIONAL ENGINEER
EXPIRES: MAY 26, 2003

DESIGN & ENGINEERING DIVISION
DESIGN SECTION

ST. JOHNS RD (NE 50TH TO NE 72ND)
SHEET LAYOUT

proud past, promising future
CLARK COUNTY
WASHINGTON

N:\CIP\PROJECTS\301422-STJohns-50thTo72nd\DESIGN\DWGS\SJLAY.dwg, Layout1, 3/23/2004 4:12:36 PM, begleyk

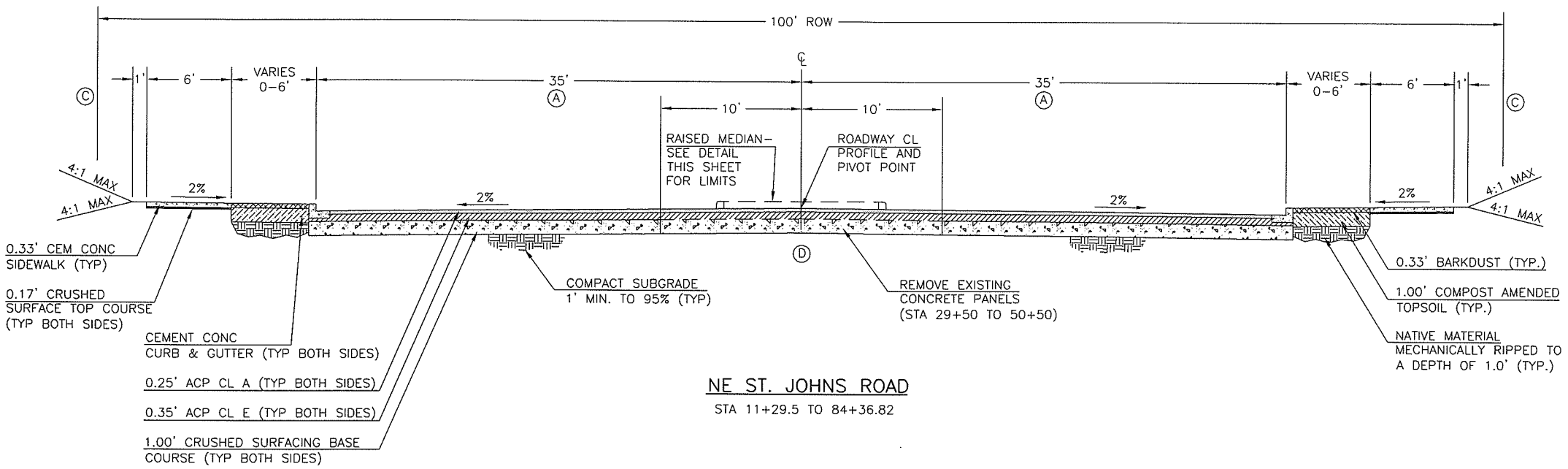

NE ST. JOHNS ROAD

STA 11+29.5 TO 84+36.82

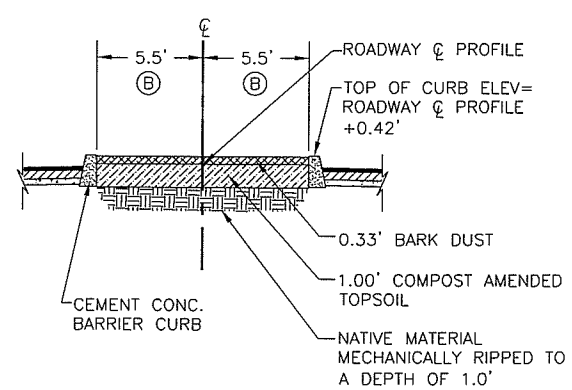

RAISED MEDIAN SECTION

NE ST. JOHNS ROAD

STA 14+60.49 TO 16+04.56
STA 25+38.00 TO 30+20.00
STA 33+10.49 TO 36+89.51
STA 39+91.00 TO 40+95.00
STA 43+70.20 TO 44+87.50
STA 47+80.49 TO 50+19.51
STA 53+23.00 TO 57+72.00
STA 60+86.36 TO 64+89.37

(A) 35' TYPICAL WIDTH. SEE PLAN SHEETS FOR TAPER WIDTHS AND LENGTHS.

(B) 5.5' TYPICAL WIDTH. SEE PLAN SHEETS FOR TAPER WIDTHS AND LENGTHS.

(C) SEE PLAN SHEET AND WALL DETAIL SHEET FOR RETAINING WALL LOCATIONS.

(D) APPROX STA 44+50 TO 55+50 (ST. JOHNS ROAD) APPROX STA 83+00 TO 88+50 (NE 72ND AVE) EXCAVATE MIN 3' BELOW SUBGRADE AND GEOGRID, REPLACE WITH BALLAST.

DESIGNED MME
DRAWN KMB
CRP 301422
HOR. NA
VERT. NA
DATE 3/18/02
DWG: TS1
SHEET OF

CALL 48 HOURS BEFORE YOU DIG
1-800-553-4344
"It's the Law"
NORTHWEST UTILITIES NOTIFICATION CENTER

MICHAEL M. EMRICK
STATE OF WASHINGTON
29030
REGISTERED PROFESSIONAL ENGINEER
EXPIRES: MAY 26, 2005

DESIGN & ENGINEERING DIVISION
DESIGN SECTION

ST. JOHNS RD (NE 50TH TO NE 72ND)
TYPICAL SECTIONS

proud past, promising future
CLARK COUNTY
WASHINGTON

N:\CIP\PROJECTS\301422-STJohns-50thTo72nd\DESIGN\DWGS\TS1-2.dwg, Layout1, 3/18/2004 4:18:38 PM, begleyk

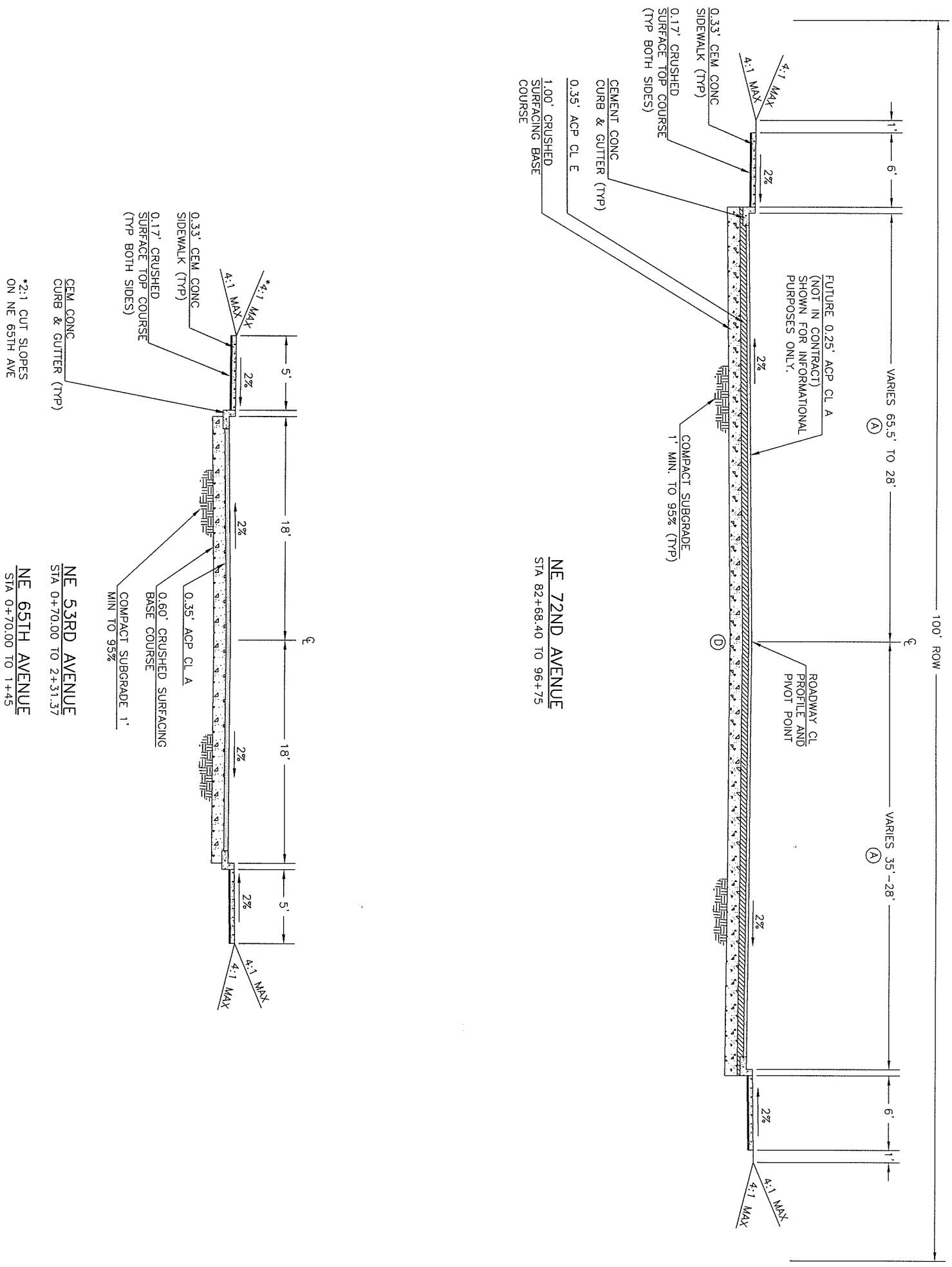

CLARK COUNTY
WASHINGTON
proud past, promising future

DESIGN & ENGINEERING DIVISION
DESIGN SECTION

ST. JOHNS RD (NE 50TH TO NE 72ND)
TYPICAL SECTIONS

MICHAEL M. EMRICK
STATE OF WASHINGTON
29030
REGISTERED
PROFESSIONAL ENGINEER
EXPIRES:MAY 26, 2005

CALL 48 HOURS
BEFORE YOU DIG
1-800-
553-4344
"It's the Law"
NORTHWEST
UTILITIES
NOTIFICATION CENTER

DESIGNED	MME
DRAWN	KMB
CRP	301422
HOR.	NA
VERT.	NA
DATE	3/18/02
DWG:	TS2
SHEET	OF

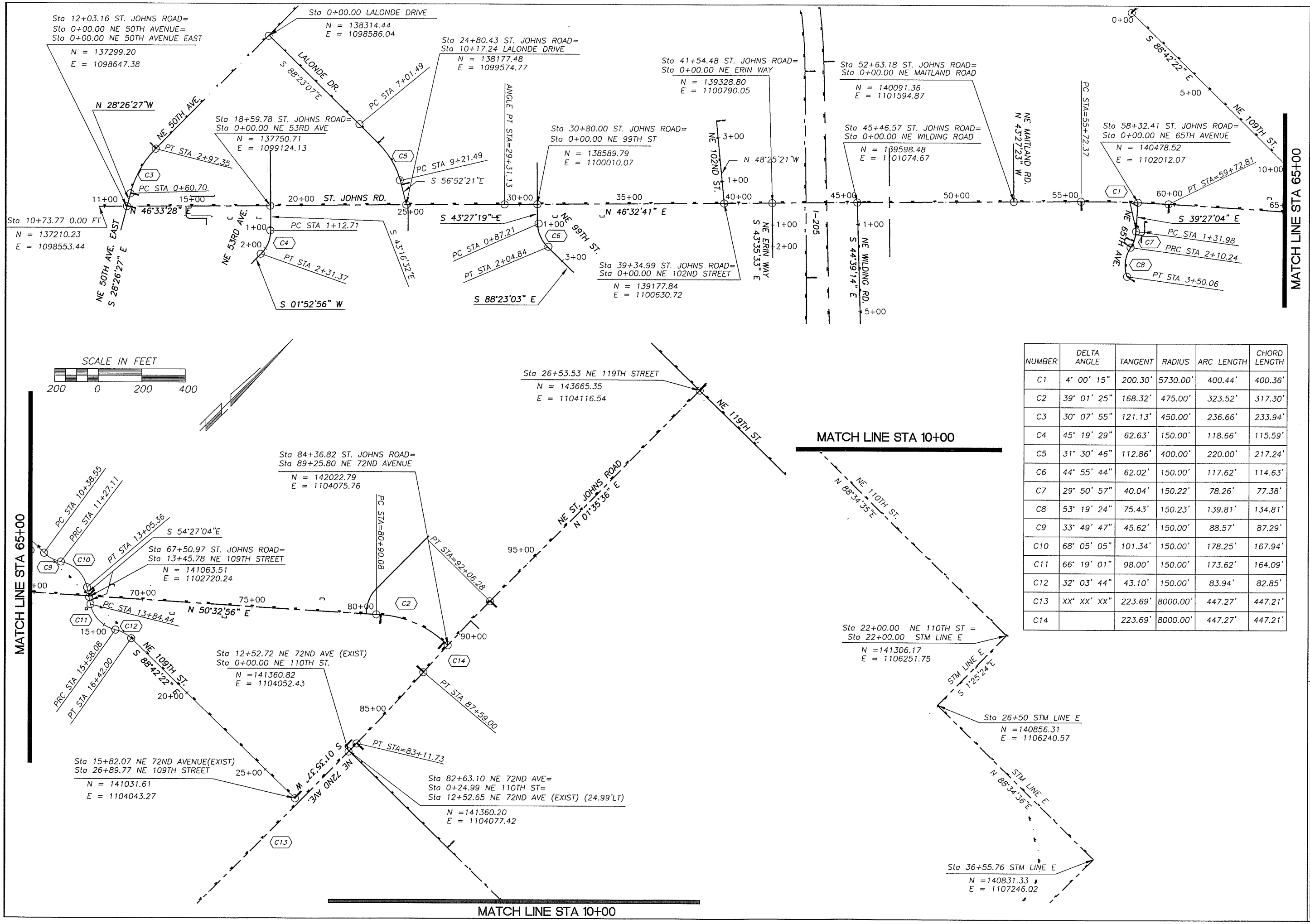

NUMBER	DELTA ANGLE	TANGENT	RADIUS	ARC LENGTH	CHORD LENGTH
C1	4° 00' 15"	200.30'	5730.00'	400.44'	400.36'
C2	39° 01' 25"	168.32'	475.00'	323.52'	317.30'
C3	30° 07' 55"	121.13'	450.00'	236.66'	233.94'
C4	45° 19' 29"	62.63'	150.00'	118.66'	115.59'
C5	31° 30' 46"	112.86'	400.00'	220.00'	217.24'
C6	44° 55' 44"	62.02'	150.00'	117.62'	114.63'
C7	29° 50' 57"	40.04'	150.22'	78.26'	77.38'
C8	53° 19' 24"	75.43'	150.23'	139.81'	134.81'
C9	33° 49' 47"	45.62'	150.00'	88.57'	87.29'
C10	68° 05' 05"	101.34'	150.00'	178.25'	167.94'
C11	66° 19' 01"	98.00'	150.00'	173.62'	164.09'
C12	32° 03' 44"	43.10'	150.00'	83.94'	82.85'
C13	XX° XX' XX"	223.69'	8000.00'	447.27'	447.21'
C14		223.69'	8000.00'	447.27'	447.21'

DESIGNED MME
DRAWN KMB
CRP 301422
HOR. 1"=200'
VERT. NA
DATE 3/18/02
DWG: HV01
SHEET OF

CALL 48 HOURS BEFORE YOU DIG
1-800-553-4344
"It's the Law"
NORTHWEST UTILITIES NOTIFICATION CENTER

STATE OF WASHINGTON
DANIEL M. BELICK
29510
REGISTERED PROFESSIONAL ENGINEER
EXPIRES MAY 26, 2005

DESIGN & ENGINEERING DIVISION
DESIGN SECTION

ST. JOHNS RD (NE 50TH TO NE 72ND)
HORIZONTAL & VERTICAL CONTROL

proud past, promising future
CLARK COUNTY
WASHINGTON

N:\CIP\PROJECTS\301422-STJohns-50thTo72nd\DESIGN\DWGS\HV01.dwg, Layout1, 3/18/2004 4:19:33 PM, begleyk

N:\CIP\PROJECTS\301422-STJohns-50thTo72nd\DESIGN\DWGS\EC01-3.dwg, EC01, 3/23/2004 5:35:47 PM, begleyk

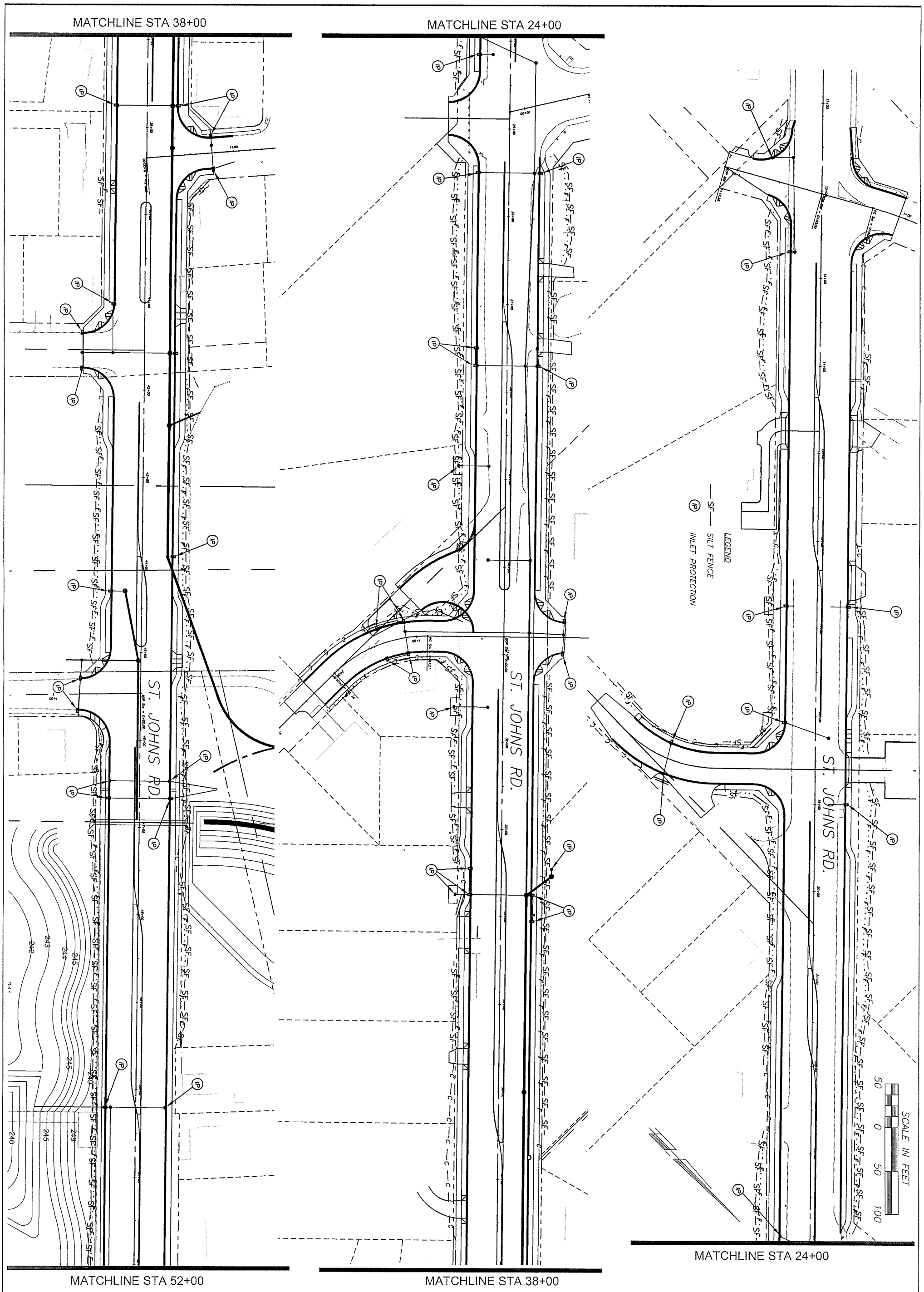

CLARK COUNTY WASHINGTON
proud past, promising future

DESIGN & ENGINEERING DIVISION
DESIGN SECTION

ST. JOHNS RD (NE 50TH TO NE 72ND)
EROSION CONTROL PLAN

MICHAEL M. EMRICK
STATE OF WASHINGTON
29030
REGISTERED
PROFESSIONAL ENGINEER
EXPIRES: MAY 26, 2003

CALL 48 HOURS BEFORE YOU DIG
1-800-553-4344
"It's the Law"
NORTHWEST UTILITIES NOTIFICATION CENTER

DESIGNED	MME
DRAWN	KMB
CRP	301422
HOR.	1"=50'
VERT.	NA
DATE	3/18/02
DWG:	EC01
SHEET	OF

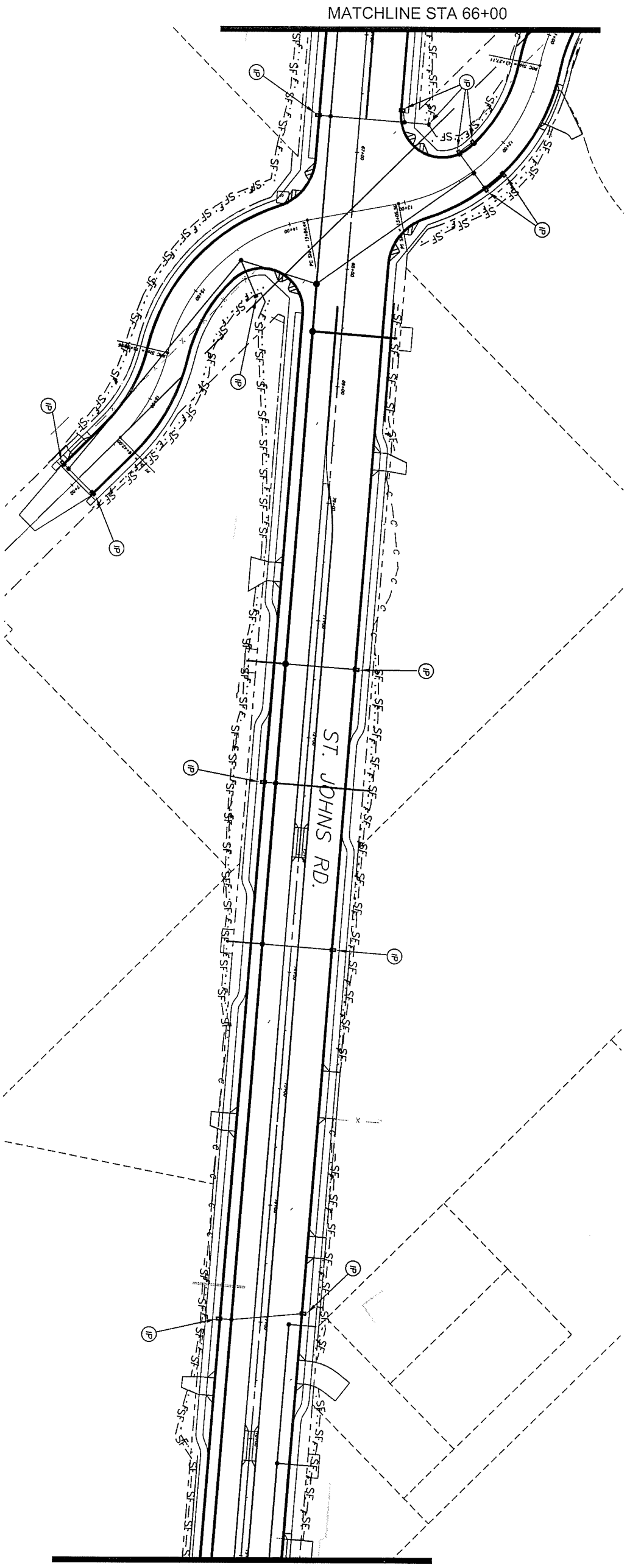

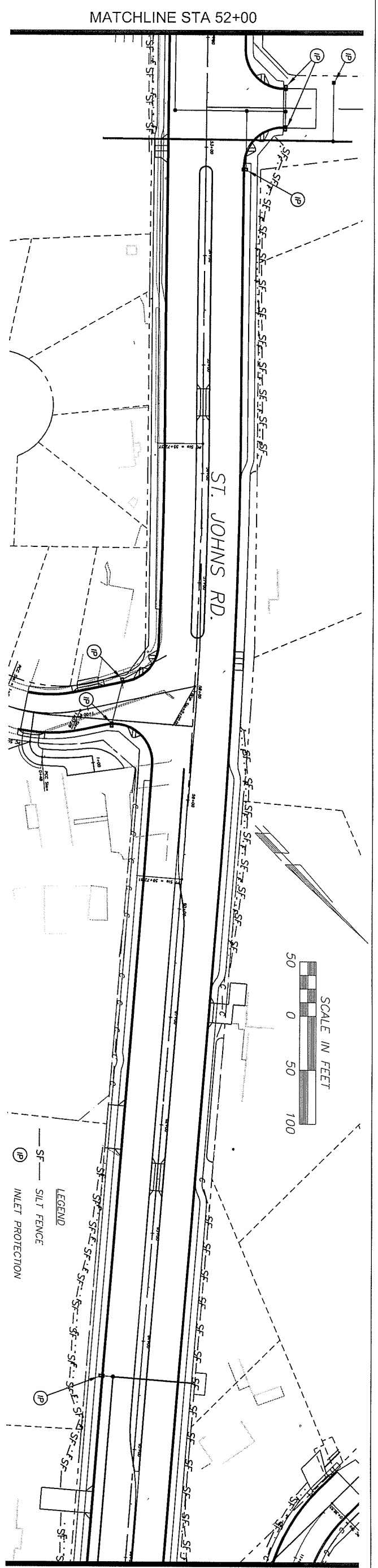

proud past, promising future

CLARK COUNTY
WASHINGTON

DESIGN & ENGINEERING DIVISION
DESIGN SECTION

ST. JOHNS RD (NE 50TH TO NE 72ND)
EROSION CONTROL PLAN

MICHAEL M. EMRICK
STATE OF WASHINGTON
29030
REGISTERED
PROFESSIONAL ENGINEER
EXPIRES: MAY 26, 2003

CALL 48 HOURS BEFORE YOU DIG
1-800-553-4344
"It's the Law"
NORTHWEST UTILITIES NOTIFICATION CENTER

DESIGNED	MME
DRAWN	KMB
CRP	301422
HOR.	1"=50'
VERT.	NA
DATE	3/18/02
DWG:	EC02
SHEET	OF

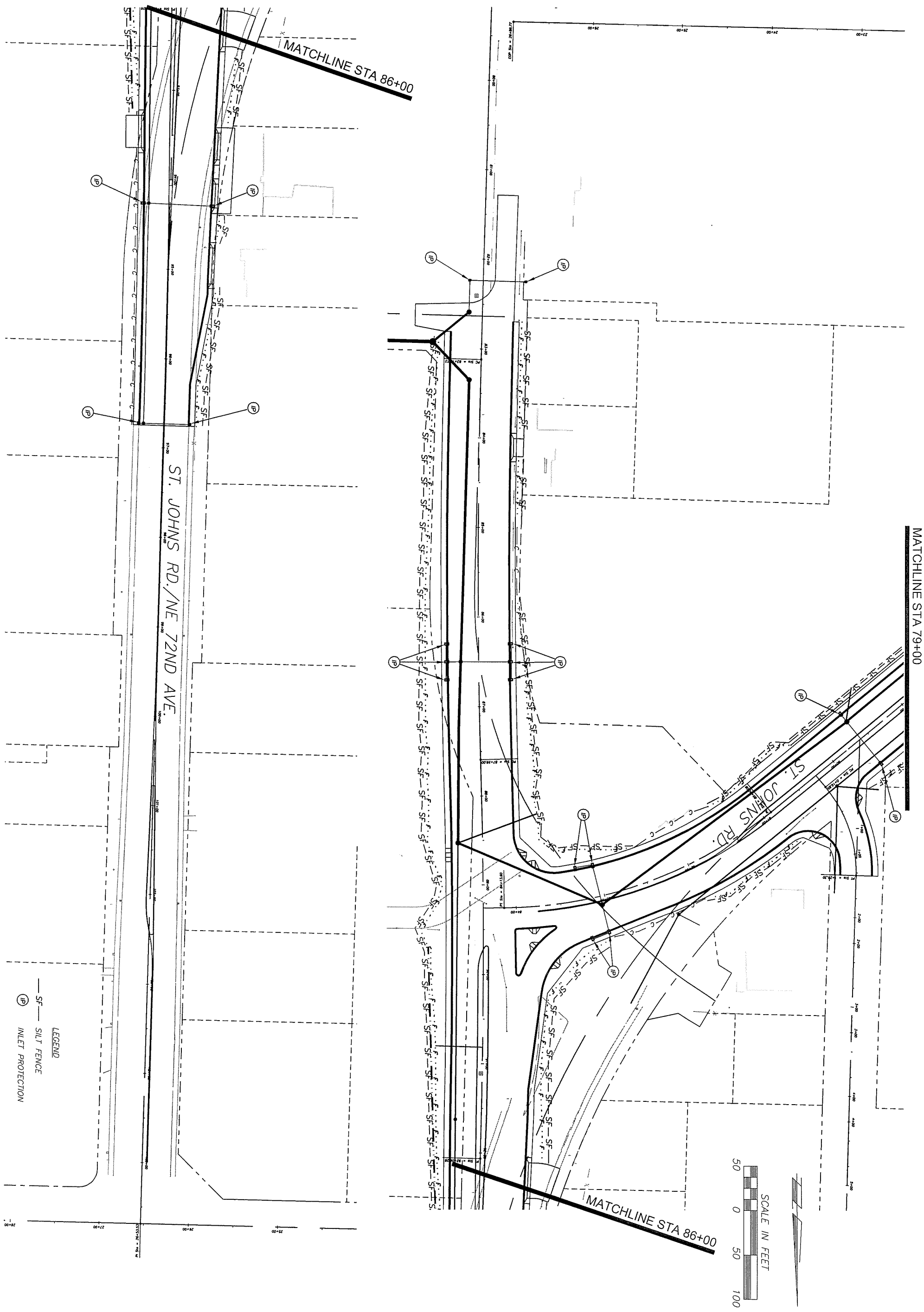

proud past, promising future

CLARK COUNTY
WASHINGTON

DESIGN & ENGINEERING DIVISION
DESIGN SECTION

ST. JOHNS RD (NE 50TH TO NE 72ND)
EROSION CONTROL PLAN

MICHAEL M. ENRICK
STATE OF WASHINGTON
29030
REGISTERED
PROFESSIONAL ENGINEER
EXPIRES:MAY 26, 2003

CALL 48 HOURS BEFORE YOU DIG
1-800-553-4344
"It's the Law"
NORTHWEST UTILITIES NOTIFICATION CENTER

DESIGNED	MME
DRAWN	KMB
CRP	301422
HOR.	1"=50'
VERT.	NA
DATE	3/18/02
DWG:	EC03
SHEET	OF

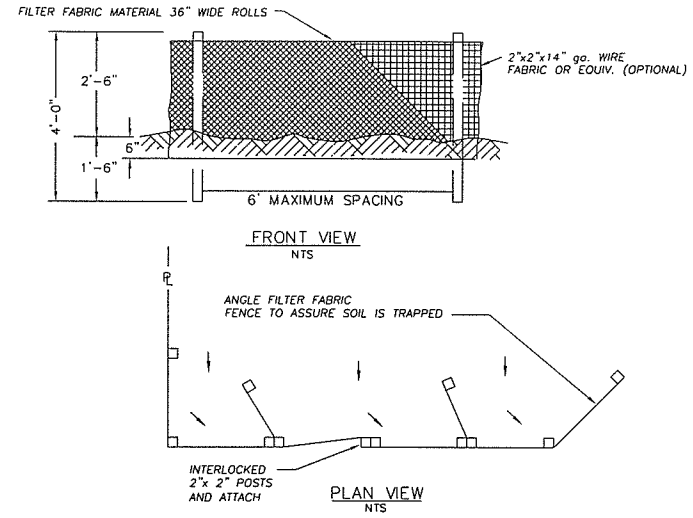

NOTES
1. THIS SEDIMENT BARRIER UTILIZES STANDARD STRENGTH OR EXTRA STRENGTH SYNTHETIC FILTER FABRICS, IT IS DESIGNED FOR SITUATIONS IN WHICH ONLY SHEET OR OVERLAND FLOWS ARE EXPECTED.
2. BURY BOTTOM OF FILTER FABRIC 6" VERTICALLY BELOW FINISHED GRADE.
3. POST ARE TO BE 2"x2" FIR, PINE OR STEEL FENCE POSTS.
4. POST TO BE INSTALLED ON UPHILL SIDE OF SLOPE.
5. COMPACT BOTH SIDES OF FILTER FABRIC TRENCH.
6. SEDIMENT FENCE TO BE SPACED ON SLOPES PER TABLE BELOW.

INSTALL PARALLEL ALONG CONTOURS AS FOLLOWS

% SLOPE	SLOPE	MAX. SPACING ON SLOPE
10% FLATTER	10:1 OR FLATTER	300 ft.
10>%<15	10:1>x<7.5:1	150 ft.
15>%<20	7.5:1>x<5:1	100 ft.
20>%<30	5:1>x<3.5:1	50 ft.
30>%<50	3.5:1>x<2:1	25 ft.

SILT FENCE INSTALLATION

STANDARD SEDIMENTATION FENCE

NTS

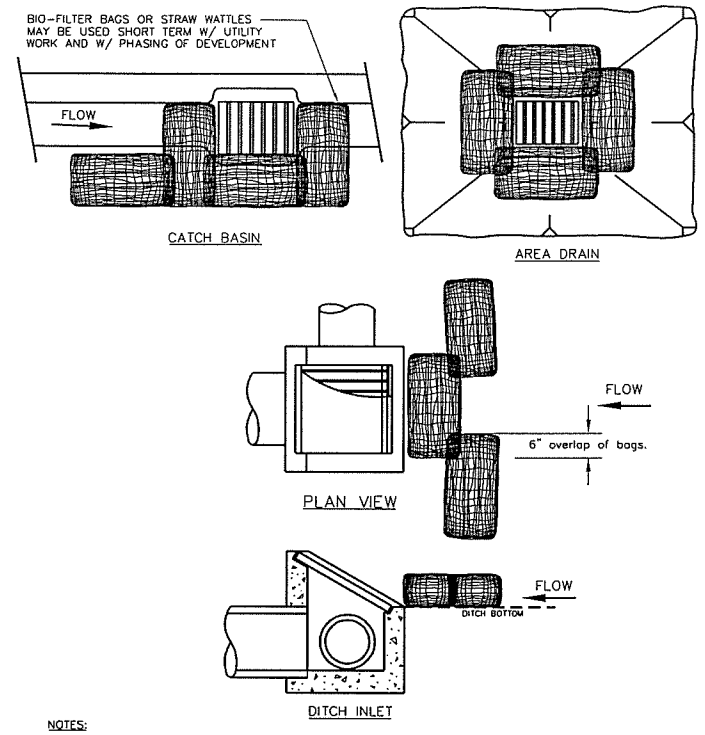

NOTES:

1. ADDITIONAL MEASURES MUST BE CONSIDERED DEPENDING ON SOIL TYPE.

2. BIO-FILTER BAGS SHOULD BE STAKED WHERE APPLICABLE USING (2) 1"x2" WOODEN STAKES OR APPROVED EQUAL PER BAG.

3. STRAW WATTLES MUST BE STABILIZED BY ATTACHING WIRE CLIPS TO THE CATCH BASIN PER MANUFACTURES SPECIFICATIONS.

4. INLET PROTECTION MUST BE REGULARLY INSPECTED BY THE EROSION CONTROL INDIVIDUAL TO INSURE PROPER PLACEMENT/FUNCTION AND MAINTENANCE.

5. SEE INLET PROTECTION NOTES STD. PLAN E-3

INLET PROTECTION TYPE 4

BIOFILTER BAG

NTS

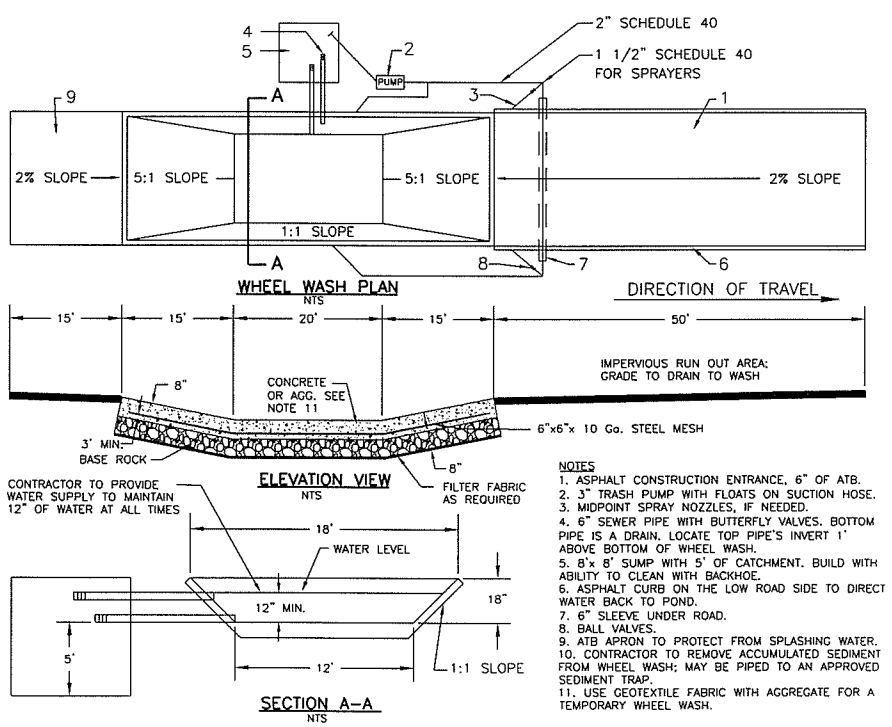

NOTES
1. ASPHALT CONSTRUCTION ENTRANCE, 6" OF ATB.
2. 3" TRASH PUMP WITH FLOATS ON SUCTION HOSE.
3. MIDPOINT SPRAY NOZZLES, IF NEEDED.
4. 6" SEWER PIPE WITH BUTTERFLY VALVES. BOTTOM PIPE IS A DRAIN. LOCATE TOP PIPE'S INVERT 1' ABOVE BOTTOM OF WHEEL WASH.
5. 8'x 8' SUMP WITH 5' OF CATCHMENT. BUILD WITH ABILITY TO CLEAN WITH BACKHOE.
6. ASPHALT CURB ON THE LOW ROAD SIDE TO DIRECT WATER BACK TO POND.
7. 6" SLEEVE UNDER ROAD.
8. BALL VALVES.
9. ATB APRON TO PROTECT FROM SPLASHING WATER.
10. CONTRACTOR TO REMOVE ACCUMULATED SEDIMENT FROM WHEEL WASH; MAY BE PIPED TO AN APPROVED SEDIMENT TRAP.
11. USE GEOTEXTILE FABRIC WITH AGGREGATE FOR A TEMPORARY WHEEL WASH.

WHEEL WASH

NTS

STANDARD NOTES FOR EROSION CONTROL PLAN

1. The Contractor shall install and maintain BMP's as shown and perform all actions necessary to prevent erosion, and control sediment from leaving the construction site. Site Contractor shall comply with Clark County Code Chapter 13 .29, Article IV.

2. All erosion control measures shall be in-place and in working condition prior to disturbing and exposing any soil surfaces (i.e. silt fence, construction entrance, sedimentation barriers, sedimentation traps).

3. All erosion prevention and control BMP's shall be maintained and repaired as needed to insure continued performance of their intended function. Needed repairs shall be made as soon as practicable. They are to remain in place and operational during all phases of construction. Construction activities shall not continue or resume until repairs to erosion control facilities are made and the facilities are functional. Any sediment leaving the site or discharging to a sensitive area shall be stopped and controlled immediately. Contaminated areas shall be cleaned and restored.

4. Clearing limits and work area limits shall be delineated and marked. Do not disturb more area than needed for construction requirements.

5. All sensitive or critical areas (wetlands, steep slopes, natural waterways), and buffers shall all be clearly delineated and clearly marked, and protected from sediment deposition.

6. Sediment laden runoff shall be prevented from entering all existing storm water catch basins and inlets affected by construction.

7. No exposed, bare soils shall remain unstabilized for more than two days during the period October 1 thru April 30 or for more than seven days during the period of May 1 through September 30. All disturbed soil surfaces shall be stabilized by a suitable application of "Best Management Practices".

8. Where feasible, no more than 500 feet of trench shall be open at one time. Excavated material shall be placed on the up-hill side of trenches provided it does not conflict with safety requirements.

9. Dewatering devices shall discharge into a sediment trap or sediment pond. No discharge shall be made to a paved street or stormwater collection system without first removing sediment.

10. Cut and fill slopes shall be constructed in a manner that will minimize erosion. Erosion shall be controlled and prevented by such measures as roughening the surface, installation of interceptor ditches, terracing, covering with matting, mulch or plastic sheeting. Runoff shall be prevented from entering a slope and from undercutting the base of slopes.

11. Any soil or debris transported onto roadways and sidewalks shall be removed. Deposits shall be completely removed by shoveling and/or sweeping. Washing shall not be utilized unless specifically approved in writing by the County.

12. All permanent infiltration systems shall be isolated and protected from sediment laden runoff entering to avoid risk of reducing the ability of the systems to infiltrate. Isolation and protection shall not be removed until the drainage area tributary to the system is completely stabilized.

13. All conveyance channels, both temporary and permanent shall be stabilized to prevent erosion of the channel. Stabilization shall extend to areas at outlets and downstream reaches vulnerable to erosion resulting from flow discharging from the channel.

14. If BMP's shown are utilized but are insufficient to prevent sediment from reaching water bodies, adjacent properties, or public rights-of-way; additional BMP's shall be implemented immediately to prevent further encroachment of sediment.

15. Stabilized areas shall be provided for employee parking and storage of construction materials. Erodeable stockpiles of earthen materials, such as topsoil, silty and clayey soils; and landscape materials, shall be covered when not being incorporated in the work. Erosion control BMP's shall be utilized as necessary to prevent sediment laden runoff from leaving or sediment being transported from these areas from vehicle activity.

16. All pollutants other than sediment that occur during construction shall be handled and disposed of in a manner that does not cause contamination of storm water.

17. The Contractor shall keep an inspection log of the condition of the erosion control facilities. Erosion control facilities shall be inspected at least weekly and after each rainfall. The inspection log shall be kept at the project site at a designated location and shall be available for review by the County. An individual that has successfully completed the County's Erosion Control Certification course shall perform inspections and maintain the log.

18. All temporary BMP's shall be removed within 30 days after final site stabilization is achieved. Trapped sediment shall be deposited and stabilized on site. Areas disturbed resulting from removal shall be permanently stabilized.

19. Construction shall not be considered complete and acceptable until all disturbed soil surfaces have been protected from erosion with permanent landscaping, covering with impervious surfaces, restored to original undisturbed condition or permanently stabilized.

20. Vegetated stabilization and landscaping shall be fertilized, watered and maintained to insure that growth of vegetation is established and sustained.

21. During dry weather construction periods the contractor shall provide project-specific dust control measures that may include: Seeding, Mulching, Matting, Water, Tackifier, or Chemical Soil Stabilizers. The contractor shall maintain the dust control measures through dry weather periods until all disturbed areas have been stabilized. Immediately re-stabilize areas disturbed by contractor's operations or other activities (wind, water, vandalism, etc.).

PRELIMINARY

DESIGNED	MME
DRAWN	KMB
CRP	301422
HOR.	NA
VERT.	NA
DATE	3/18/02
DWG:	EC04
SHEET	OF

CALL 48 HOURS BEFORE YOU DIG UTILITIES 1-800-553-4344 "It's the Law" NORTHWEST UTILITIES NOTIFICATION CENTER

STATE OF WASHINGTON MICHAEL M. ELDRICK 29030 REGISTERED PROFESSIONAL ENGINEER EXPIRES MAY 26, 2003

DESIGN & ENGINEERING DIVISION
DESIGN SECTION

ST. JOHNS RD (NE 50TH TO NE 72ND)
EROSION CONTROL DETAILS

proud past, promising future
CLARK COUNTY WASHINGTON

N:\CIP\PROJECTS\301422-STJohns-50thTo72nd\DESIGN\DWGS\EC04.dwg, Layout1, 3/18/2004 4:21:53 PM, begleyk

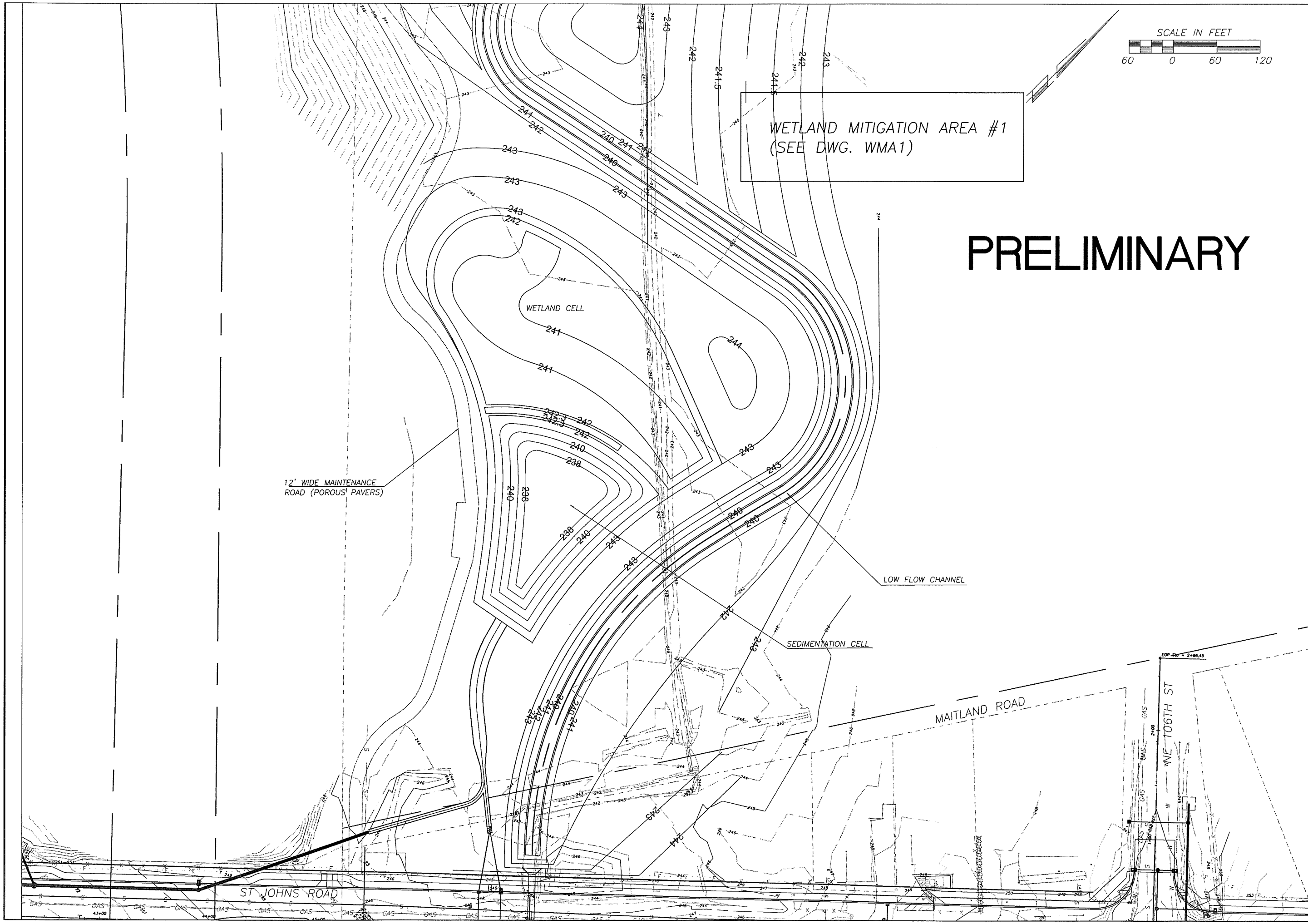

DESIGN & ENGINEERING DIVISION
DESIGN SECTION

ST. JOHNS RD (NE 50TH TO NE 72ND)
WETLAND MITIGATION AREA #1

CALL 48 HOURS BEFORE YOU DIG
1-800-553-4344
"It's the Law"
NORTHWEST UTILITIES NOTIFICATION CENTER

DESIGNED	MME/JM
DRAWN	KMB
CRP	301422
HOR.	1"=40'
VERT.	NA
DATE	9/15/03
DWG:	SWF1
SHEET	OF

proud past, promising future
CLARK COUNTY WASHINGTON

N:\CIP\PROJECTS\301422-STJohns-50thTo72nd\DESIGN\DWGS\SWF1.dwg, Layout1, 3/18/2004 4:23:31 PM, begleyk

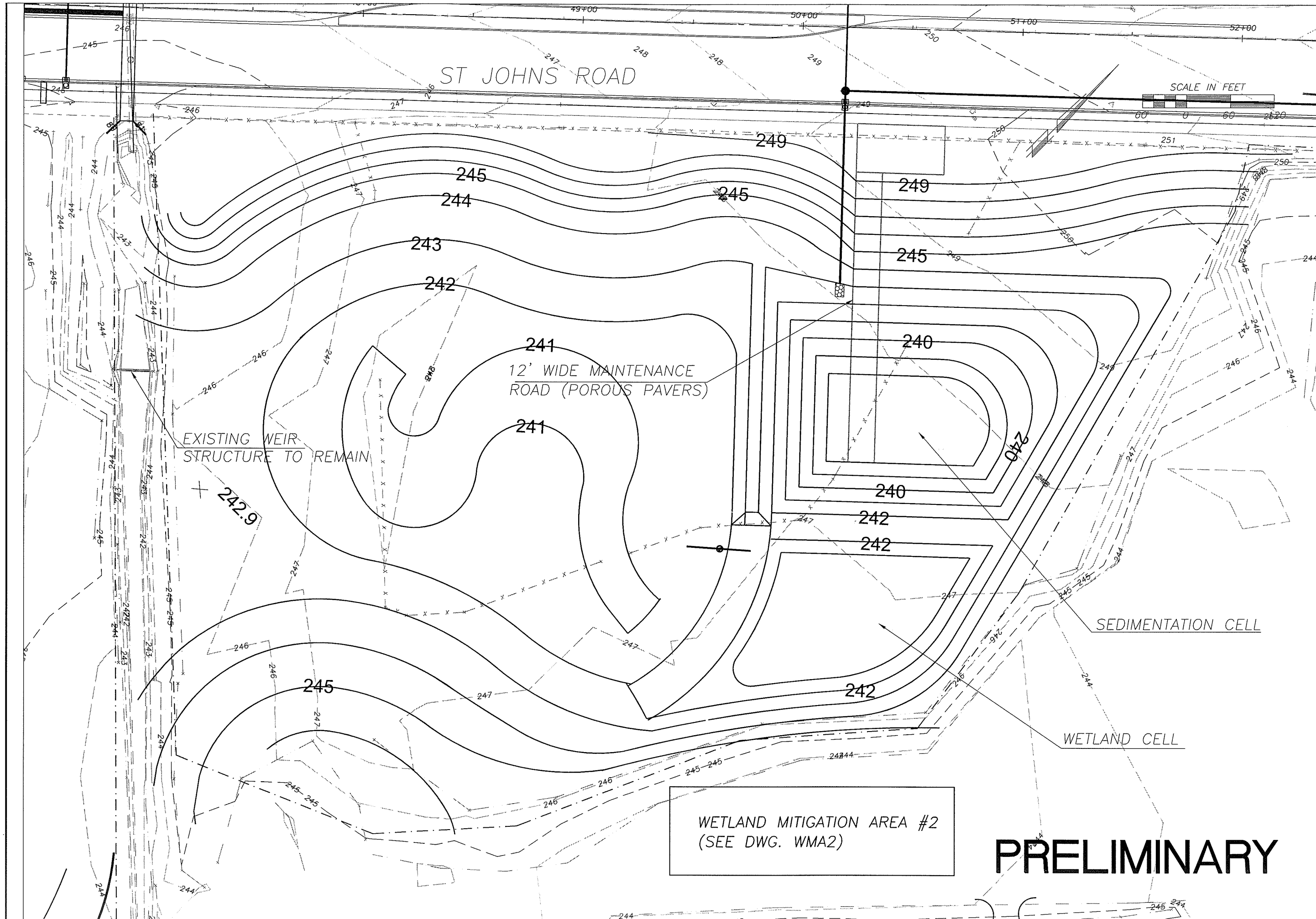

DESIGNED	MME/JM
DRAWN	KMB
CRP	301422
HOR.	1"=20'
VERT.	NA
DATE	9/15/03
DWG:	SWF2
SHEET	OF

CALL 48 HOURS BEFORE YOU DIG 1-800-553-4344 "It's the Law" NORTHWEST UTILITY NOTIFICATION CENTER

STATE OF WASHINGTON 31148 REGISTERED PROFESSIONAL ENGINEER
EXPIRES JULY 7, 2003

DESIGN & ENGINEERING DIVISION
DESIGN SECTION

ST. JOHNS RD (NE 50TH TO NE 72ND)
STORMWATER FACILITY #2

proud past, promising future
CLARK COUNTY WASHINGTON

N:\CIP\PROJECTS\301422-STJohns-50thTo72nd\DESIGN\DWGS\SWF2.dwg, Layout1, 3/18/2004 4:24:18 PM, beglerk

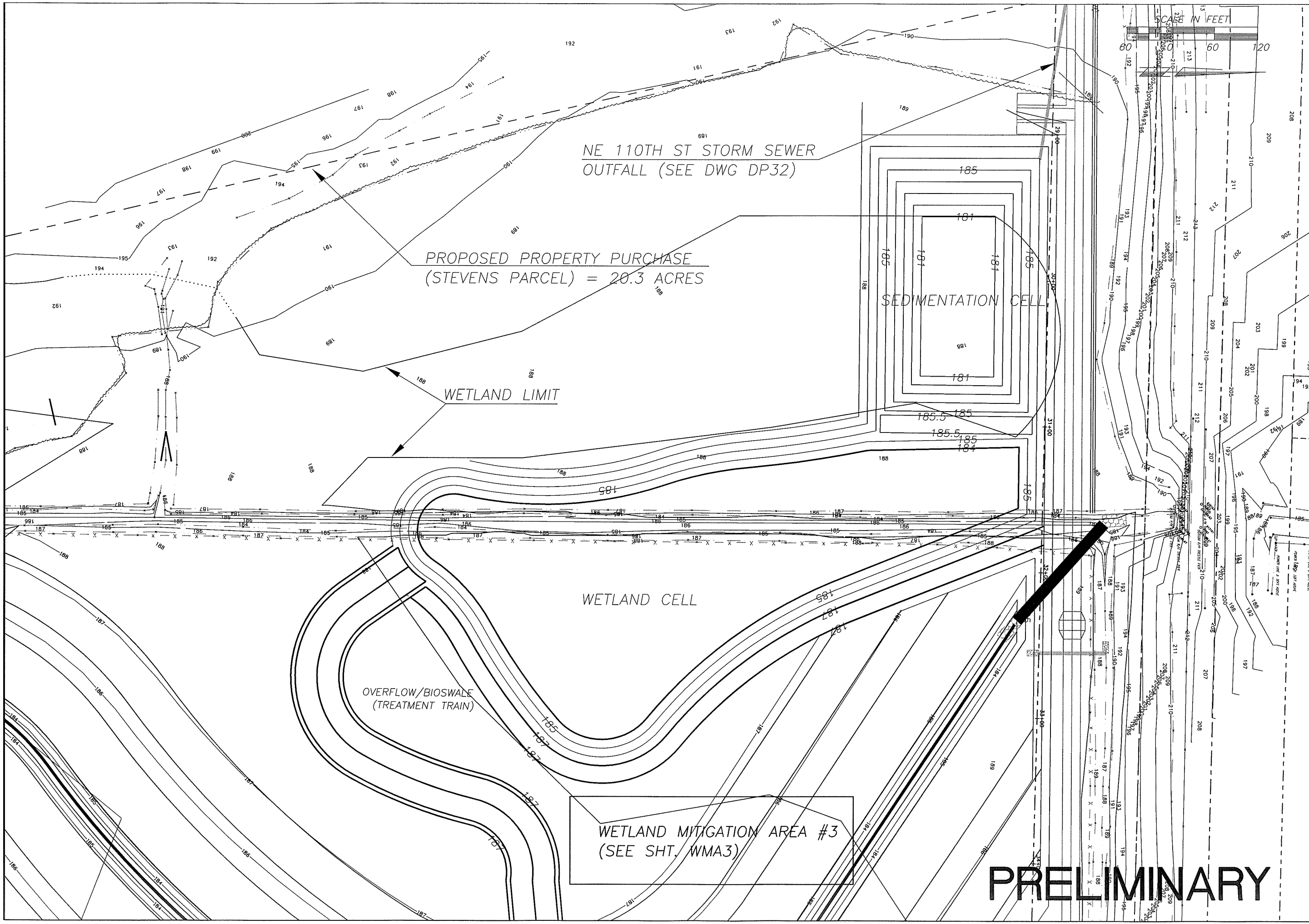

N:\CIP\PROJECTS\301422-STJohns-50thTo72nd\DESIGN\DWGS\SWF3.dwg, LAYOUT 1, 3/18/2004 4:25:14 PM, begleyk

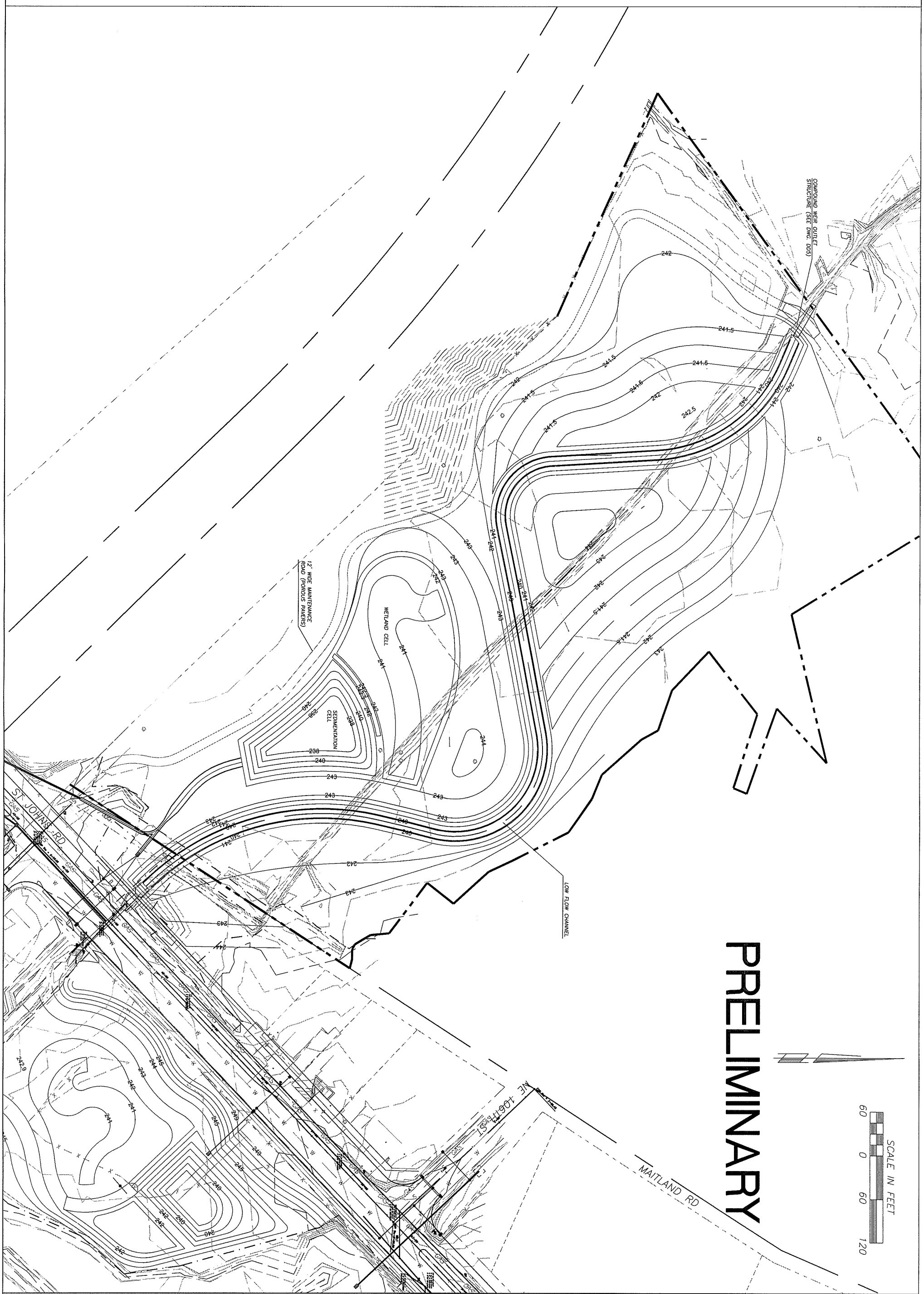

proud past, promising future

CLARK COUNTY
WASHINGTON

DESIGN & ENGINEERING DIVISION
DESIGN SECTION

ST. JOHNS RD (NE 50TH TO NE 72ND)
WETLAND MITIGATION AREA #1

JOHN MILNE
STATE OF WASHINGTON
31148
REGISTERED
PROFESSIONAL ENGINEER
EXPIRES: JULY 7, 2003

CALL 48 HOURS BEFORE YOU DIG
1-800-553-4344
"It's the Law"
NORTHWEST UTILITIES NOTIFICATION CENTER

DESIGNED	MME/JM
DRAWN	KMB
CRP	301422
HOR.	1"=60'
VERT.	NA
DATE	9/15/03
DWG:	WMA1
SHEET	OF

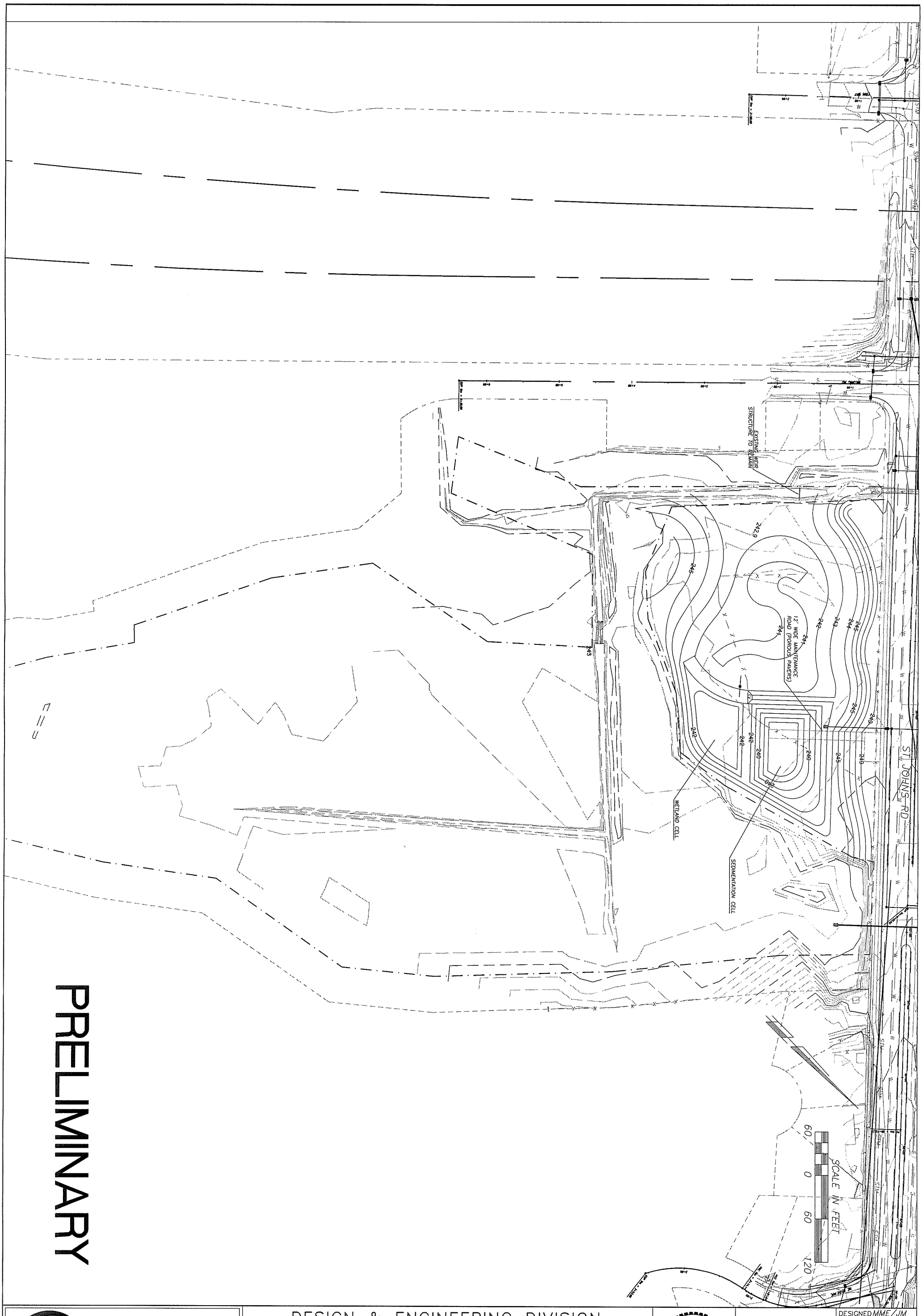

PRELIMINARY

proud past, promising future

CLARK COUNTY
WASHINGTON

DESIGN & ENGINEERING DIVISION
DESIGN SECTION

ST. JOHNS RD (NE 50TH TO NE 72ND)
WETLAND MITIGATION AREA #2

JOHN MILNE
STATE OF WASHINGTON
31148
REGISTERED
PROFESSIONAL ENGINEER
EXPIRES:JULY 7, 2003

CALL 48 HOURS BEFORE YOU DIG
1-800-553-4344
"It's the Law"
NORTHWEST UTILITIES NOTIFICATION CENTER

DESIGNED	MME/JM
DRAWN	KMB
CRP	301422
HOR.	1"=60'
VERT.	NA
DATE	9/15/03
DWG:	WMA2
SHEET	OF

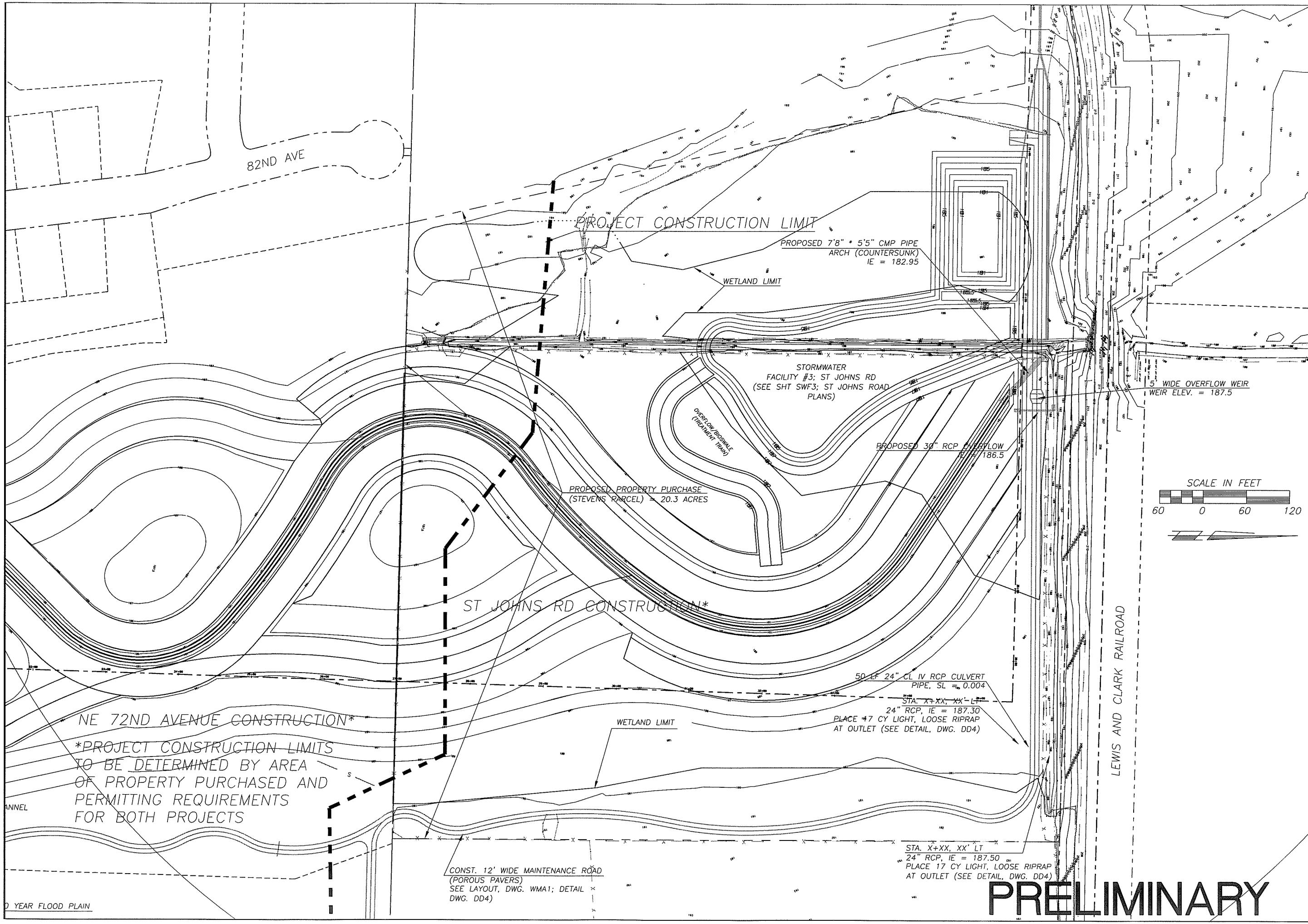

DESIGNED JM
DRAWN JM
CRP 301422
HOR. 1"=60'
VERT. NA
DATE 11/13/03
DWG: WMA3
SHEET OF

CALL 48 HOURS BEFORE YOU DIG
1-800-553-4344
"It's the Law"
NORTHWEST UTILITIES NOTIFICATION CENTER

JOHN MILNE
STATE OF WASHINGTON
31148
REGISTERED PROFESSIONAL ENGINEER
EXPIRES JULY 7, 2003

DESIGN & ENGINEERING DIVISION
DESIGN SECTION

ST JOHNS RD (NE 50TH TO NE 72ND)
WETLAND MIGRATION AREA #3

proud past, promising future
CLARK COUNTY WASHINGTON

N:\CIP\PROJECTS\301422-STJohns-50thTo72nd\DESIGN\DWGS\WMA3.dwg, LAYOUT 1, 3/18/2004 4:36:59 PM, begleyk

NOTES:

A MINIMUM 3' WIDE ACCESSIBLE ROUTE SHALL BE MAINTAINED IN ALL PEDESTRIAN ACCESSIBLE AREAS.

CONTRACTION POINTS SHALL BE PLACED ALONG SIDEWALKS IN ACCORD WITH SIDEWALK DETAIL. ALL JOINTS SHALL BE CLEANED AND EDGED.

CHANGES IN LEVEL UP TO 1/4" MAY BE VERTICAL AND WITHOUT EDGE TREATMENT. CHANGES IN LEVEL BETWEEN 1/4" AND 1/2" SHALL BE BEVELED WITH A SLOPE NO GREATER THAN 2:1.

CEMENT CONCRETE APPROACHES SHALL BE CONSTRUCTED OF AIR-ENTRAINED CLASS 3000 AND MAY BE POURED INTEGRAL WITH CURB.

EXISTING CURB, GUTTER, AND SIDEWALK TO BE SAWCUT AND REMOVED FOR INSTALLATION OF APPROACH.

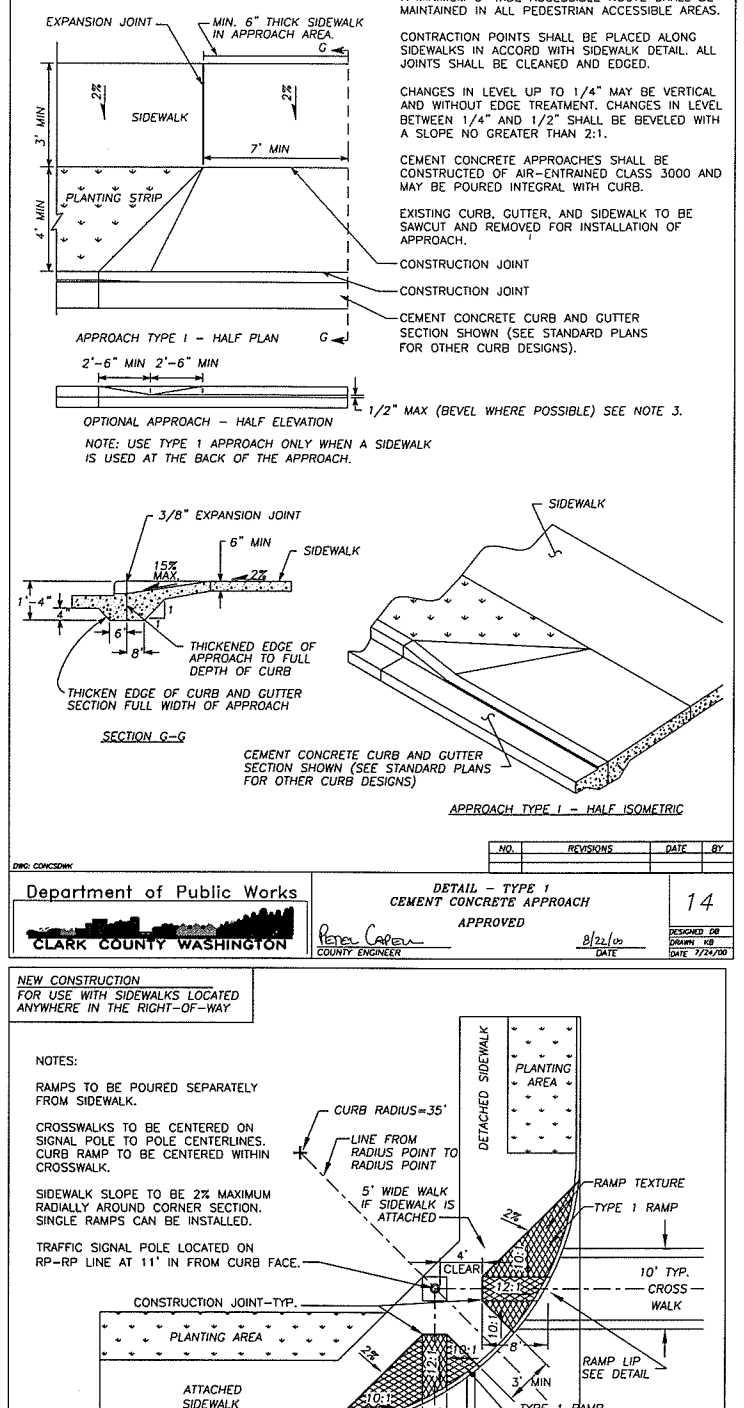

NO.	REVISIONS	DATE	BY

DWG: CONCSDWK

Department of Public Works
CLARK COUNTY WASHINGTON

DETAIL - TYPE 1
CEMENT CONCRETE APPROACH
APPROVED
COUNTY ENGINEER — DATE 8/22/00

14

DESIGNED DB
DRAWN KB
DATE 7/24/00

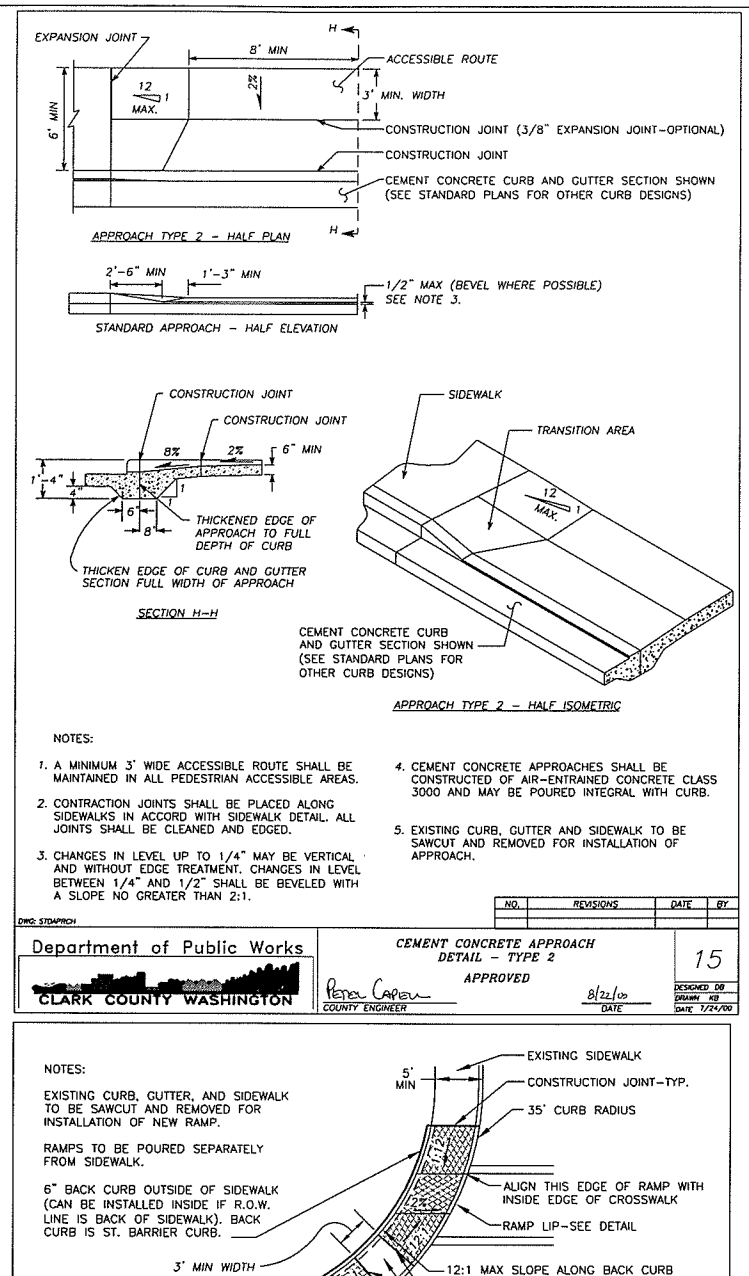

NOTES:

1. A MINIMUM 3' WIDE ACCESSIBLE ROUTE SHALL BE MAINTAINED IN ALL PEDESTRIAN ACCESSIBLE AREAS.
2. CONTRACTION JOINTS SHALL BE PLACED ALONG SIDEWALKS IN ACCORD WITH SIDEWALK DETAIL. ALL JOINTS SHALL BE CLEANED AND EDGED.
3. CHANGES IN LEVEL UP TO 1/4" MAY BE VERTICAL AND WITHOUT EDGE TREATMENT. CHANGES IN LEVEL BETWEEN 1/4" AND 1/2" SHALL BE BEVELED WITH A SLOPE NO GREATER THAN 2:1.
4. CEMENT CONCRETE APPROACHES SHALL BE CONSTRUCTED OF AIR-ENTRAINED CONCRETE CLASS 3000 AND MAY BE POURED INTEGRAL WITH CURB.
5. EXISTING CURB, GUTTER AND SIDEWALK TO BE SAWCUT AND REMOVED FOR INSTALLATION OF APPROACH.

NO.	REVISIONS	DATE	BY

DWG: STDAPRCH

Department of Public Works
CLARK COUNTY WASHINGTON

CEMENT CONCRETE APPROACH
DETAIL - TYPE 2
APPROVED
COUNTY ENGINEER — DATE 8/22/00

15

DESIGNED DB
DRAWN KB
DATE 7/24/00

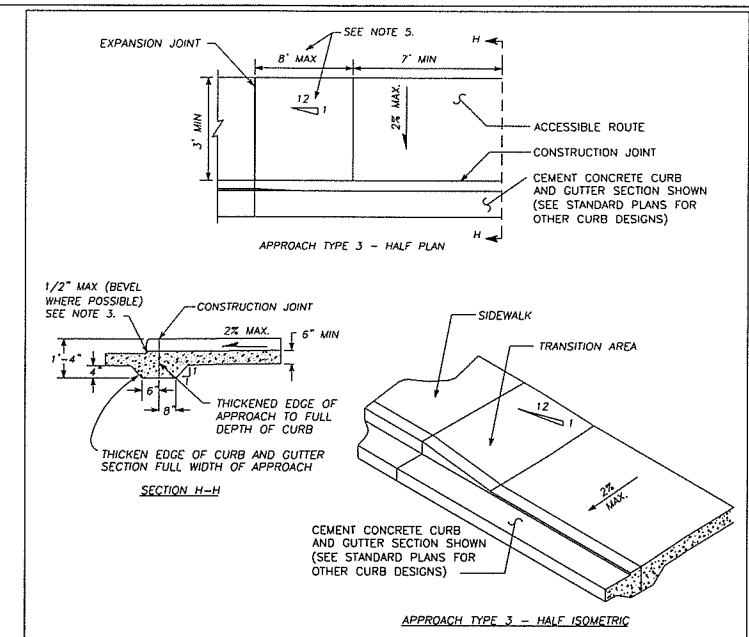

NOTES:

1. A MINIMUM 3' WIDE ACCESSIBLE ROUTE SHALL BE MAINTAINED IN ALL PEDESTRIAN ACCESSIBLE AREAS.
2. CONTRACTION JOINTS SHALL BE PLACED ALONG SIDEWALKS IN ACCORD WITH SIDEWALK DETAIL. ALL JOINTS SHALL BE CLEANED AND EDGED.
3. CHANGES IN LEVEL UP TO 1/4" MAY BE VERTICAL AND WITHOUT EDGE TREATMENT. CHANGES IN LEVEL BETWEEN 1/4" AND 1/2" SHALL BE BEVELED WITH A SLOPE NO GREATER THAN 2:1.
4. TRANSITION AREA TO BE SLOPED AT 1v TO 12h, UNLESS STREET GRADE WOULD CREATE A TRANSITION LENGTH GREATER THAN 8', THEN THE MAXIMUM LENGTH OF 8' GOVERNS SLOPE.
5. CEMENT CONCRETE APPROACHES SHALL BE CONSTRUCTED OF AIR-ENTRAINED CONCRETE CLASS 3000 AND MAY BE POURED INTEGRAL WITH CURB.
6. EXISTING CURB, GUTTER AND SIDEWALK TO BE SAWCUT AND REMOVED FOR INSTALLATION OF APPROACH.

NO.	REVISIONS	DATE	BY

DWG: STDAPRC2

Department of Public Works
CLARK COUNTY WASHINGTON

CEMENT CONCRETE APPROACH
DETAIL - TYPE 3
APPROVED
COUNTY ENGINEER — DATE 8/22/00

16

DESIGNED DB
DRAWN KB
DATE 7/24/00

NEW CONSTRUCTION
FOR USE WITH SIDEWALKS LOCATED ANYWHERE IN THE RIGHT-OF-WAY

NOTES:

RAMPS TO BE POURED SEPARATELY FROM SIDEWALK.

CROSSWALKS TO BE CENTERED ON SIGNAL POLE TO POLE CENTERLINES. CURB RAMP TO BE CENTERED WITHIN CROSSWALK.

SIDEWALK SLOPE TO BE 2% MAXIMUM RADIALLY AROUND CORNER SECTION. SINGLE RAMPS CAN BE INSTALLED.

TRAFFIC SIGNAL POLE LOCATED ON RP-RP LINE AT 11' IN FROM CURB FACE.

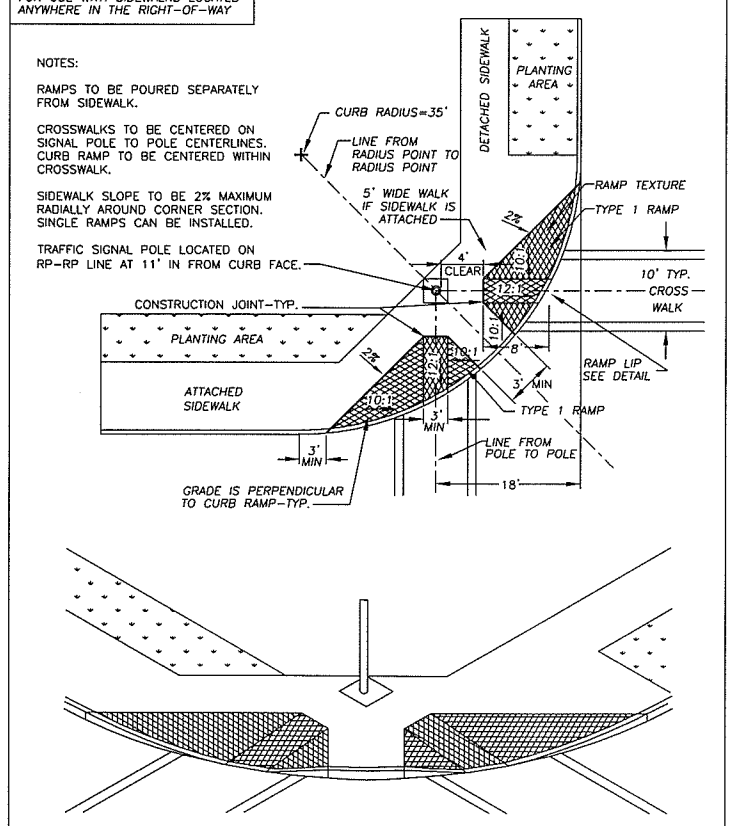

NO.	REVISIONS	DATE	BY

DWG: SHT7A

Department of Public Works
CLARK COUNTY WASHINGTON

TYPE 1 RAMP
APPROVED
COUNTY ENGINEER — DATE 8/22/00

1

DESIGNED DB
DRAWN KB
DATE 7/24/00

NOTES:

EXISTING CURB, GUTTER, AND SIDEWALK TO BE SAWCUT AND REMOVED FOR INSTALLATION OF NEW RAMP.

RAMPS TO BE POURED SEPARATELY FROM SIDEWALK.

6" BACK CURB OUTSIDE OF SIDEWALK (CAN BE INSTALLED INSIDE IF R.O.W. LINE IS BACK OF SIDEWALK). BACK CURB IS ST. BARRIER CURB.

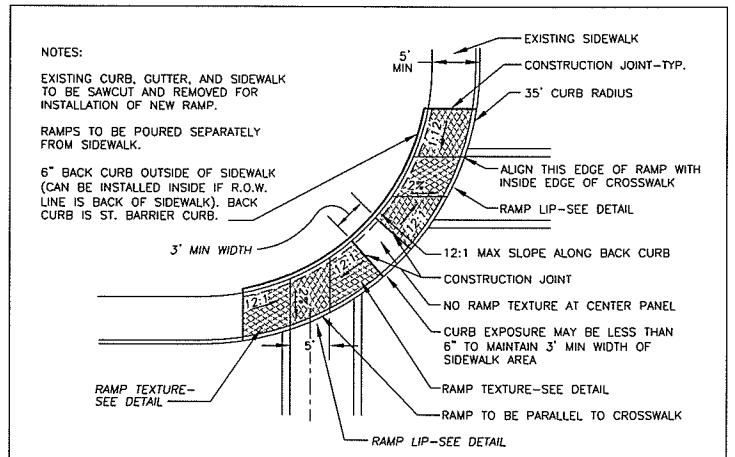

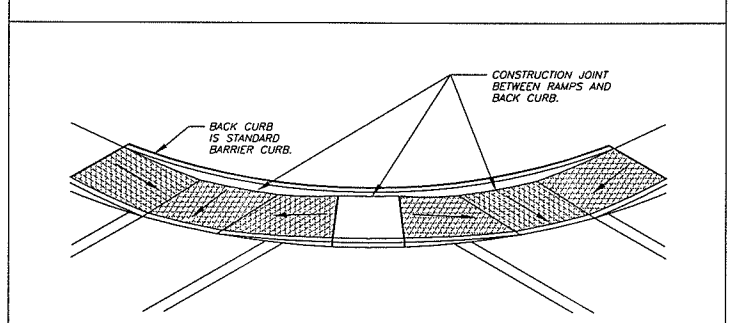

THIS TYPE OF RAMP IS ONLY TO BE USED IN EXISTING RESTRICTED RIGHT-OF-WAY AREAS. DOUBLE RAMP SHOWN-SINGLE RAMP MAY BE USED AT SOME INSTALLATIONS.

NO.	REVISIONS	DATE	BY

DWG: SHT8A

Department of Public Works
CLARK COUNTY WASHINGTON

TYPE 2 RAMP - DOUBLE
APPROVED
COUNTY ENGINEER — DATE 8/22/00

2

DESIGNED DB
DRAWN KB
DATE 7/24/00

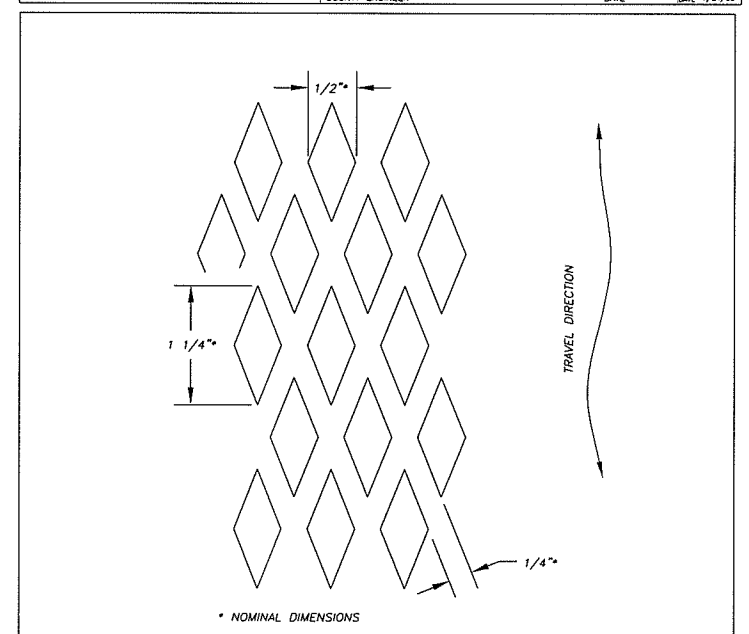

RAMP TEXTURE DETAIL

RAMP TEXTURE IS TO BE DONE WITH AN EXPANDED METAL GRATE PLACED AND REMOVED FROM WET CONCRETE TO LEAVE A DIAMON PATTERN AS SHOWN. THE LONG AXIS OF THE DIAMOND PATTERN SHALL BE IN THE DIRECTION OF TRAVEL. GROOVES SHALL BE 1/8" DEEP AND 1/4" WIDE. ALTERNATIVE TEXTURE PATTERNS SHALL BE APPROVED BY COUNTY ENGINEER BEFORE USE.

NO.	REVISIONS	DATE	BY

DWG: SHT12A

Department of Public Works
CLARK COUNTY WASHINGTON

RAMP TEXTURE DETAIL
APPROVED
COUNTY ENGINEER — DATE 8/22/00

11

DESIGNED DB
DRAWN KB
DATE 7/24/00

DESIGNED	ME
DRAWN	KB
CRP	301422
HOR.	NA
VERT.	NA
DATE	3/18/02
DWG:	RD01
SHEET	OF

CALL 48 HOURS BEFORE YOU DIG
1-800-553-4344
"It's the Law"
NORTHWEST UTILITIES NOTIFICATION CENTER

MICHAEL M. EDRICK
STATE OF WASHINGTON
29030
PROFESSIONAL ENGINEER
EXPIRES: MAY 26, 2005

DESIGN & ENGINEERING DIVISION
DESIGN SECTION

ST. JOHNS RD (NE 50TH TO NE 72ND)
DETAILS

proud past, promising future
CLARK COUNTY WASHINGTON

N:\CP\PROJECTS\301422-STJohns-50thTo72nd\DESIGN\DWGS\RD1-2.dwg, Layout1, 3/18/2004 4:37:57 PM, begleyk

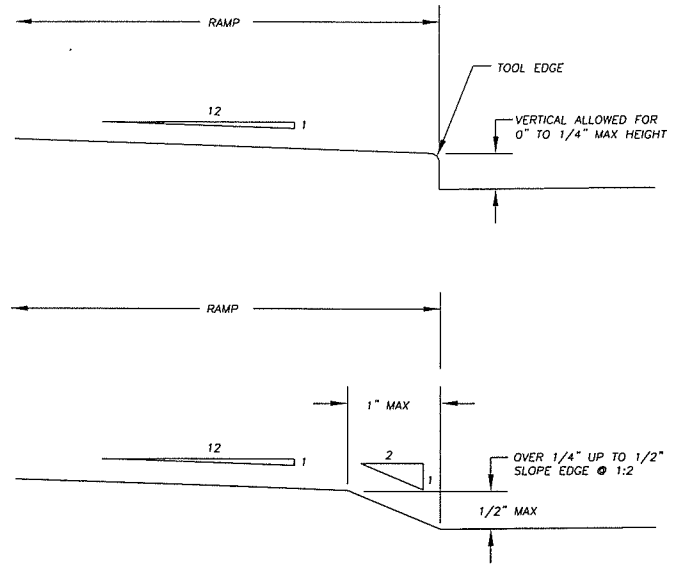

CHANGES UP TO 1/4" MAY BE VERTICAL AND WITHOUT EDGE TREATMENT. CHANGES IN LEVEL GREATER THAN 1/4" UP TO 1/2" SHALL HAVE THE WHOLE VERTICAL CHANGE BEVELED WITH A SLOPE NO GREATER THAN 2:1.

DWG: SHT16A

NO.	REVISIONS	DATE	BY

Department of Public Works
CLARK COUNTY WASHINGTON

RAMP LIP DETAIL

APPROVED

Peter Capen
COUNTY ENGINEER

8/22/00
DATE

10

DESIGNED DB
DRAWN KB
DATE 7/24/00

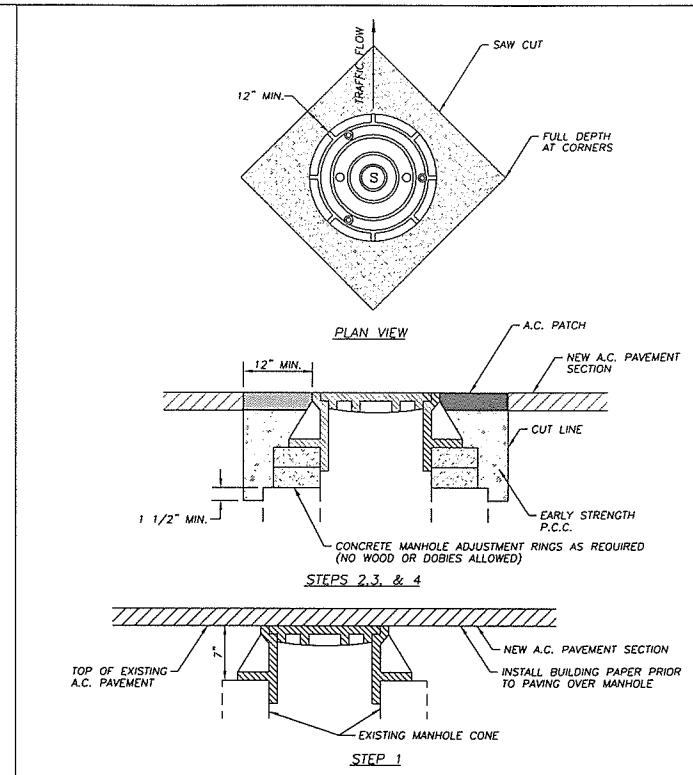

STEP 1 COVER EXSITING MANHOLE WITH BUILDING PAPER AND CONSTRUCT A.C. PAVEMENT OVER TOP OF MANHOLE.
STEP 2 SAW CUT AND REMOVE PAVEMENT AROUND MANHOLE 12" MIN. FROM MANHOLE FRAME.
STEP 3 RAISE MANHOLE FRAME AND COVER USING CONCRETE RINGS AND MECHANICAL ADJUSTMENT DEVICES TO FINISH GRADE MATCHING PROFILE AND CROSS SLOPE.
STEP 4 BACKFILL WITH EARLY STRENGTH P.C.C. AND A.C. TO DEPTHS AS DIRECTED.

DWG: A14

NO.	REVISIONS	DATE	BY

Department of Public Works
CLARK COUNTY WASHINGTON

MANHOLE ADJUSTMENT DETAIL

APPROVED

Peter Capen
COUNTY ENGINEER

8/22/00
DATE

DESIGNED
DRAWN
DATE 7/20/00

CEMENT CONCRETE APPROACH SCHEDULE

STATION	WIDTH	TYPE
ST. JOHNS ROAD		
14+76 LT	30'	2
14+74 RT	30'	2
16+47 LT	40'	2
18+60 LT	28'	2
22+65 RT	35'	1
26+61 LT	15'	1
27+46 LT	15'	1
28+35 RT	15'	1
32+66 RT	15'	1
34+18 RT	36'	1
35+60 RT	15'	1
37+35 RT	20'	1
60+93 LT	18'	2
62+05 RT	40'	1
65+52 RT	20'	1
69+61 LT	15'	1
70+61 RT	16'	1
75+02 LT	40'	1
75+32 RT	15'	1
76+33 LT	18'	1
77+41 LT	18'	1
77+58 RT	15'	1
78+93 LT	20'	2
83+00 LT	40'	2
84+67 LT	35'	1
85+88 LT	40'	2
87+17 LT	25'	2
87+27 RT	35'	2
87+64 LT	40'	2
87+69 LT	30'	2
88+64 LT	40'	1
90+60 LT	40'	1
91+55 LT	40'	2

STATION	WIDTH	TYPE
NE 65TH AVENUE		
0+95 RT	20'	2
1+50 LT	15'	2
NE 109TH STREET		
10+30 RT	20'	2
11+55 LT	31'	2
16+73 RT	16'	2
NE 72ND AVENUE		
16+18 RT	30'	2
NE 99TH STREET		
1+33 RT	33'	2

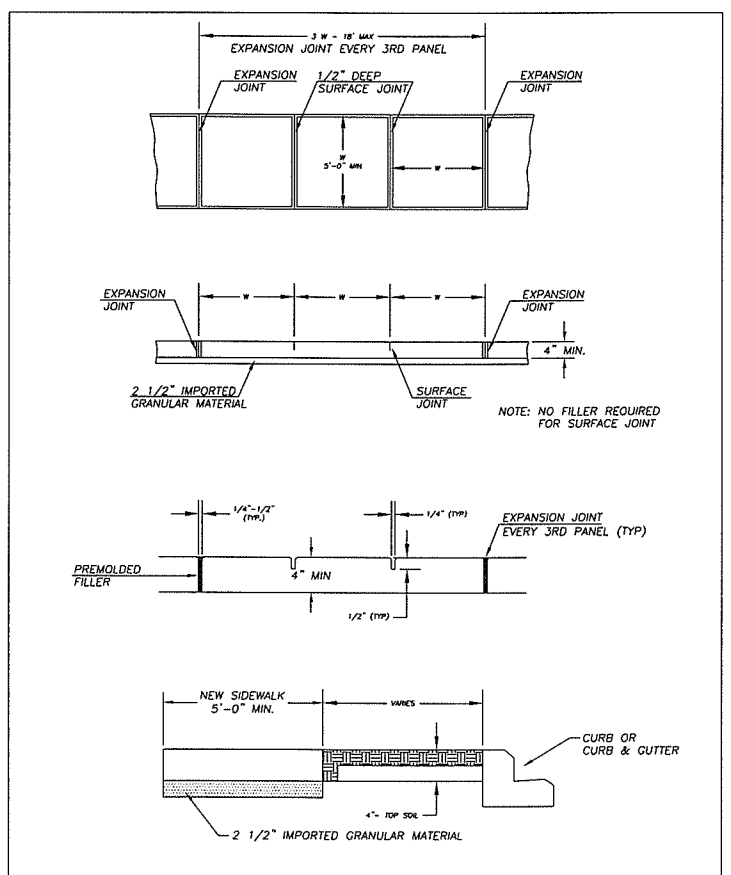

DWG: PANEL

NO.	REVISIONS	DATE	BY

Department of Public Works
CLARK COUNTY WASHINGTON

SIDEWALK DETAIL

APPROVED

Peter Capen
COUNTY ENGINEER

8/22/00
DATE

12

DESIGNED DB
DRAWN KB
DATE 7/24/00

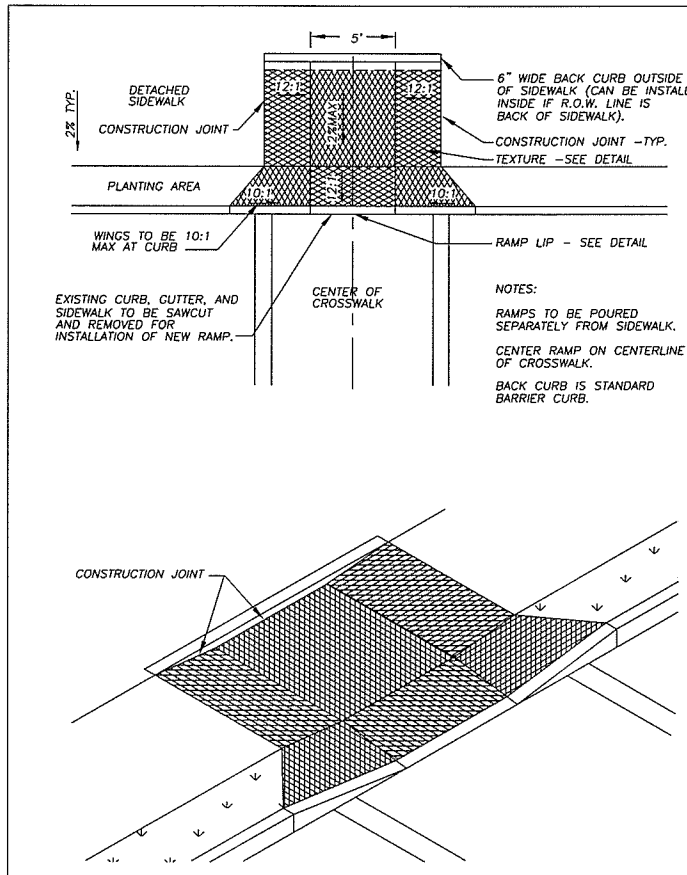

DWG: 4.dwg

NO.	REVISIONS	DATE	BY

Department of Public Works
CLARK COUNTY WASHINGTON

TYPE 4 RAMP

APPROVED

Peter Capen
COUNTY ENGINEER

8/22/00
DATE

4

DESIGNED DB
DRAWN KB
DATE 7/24/00

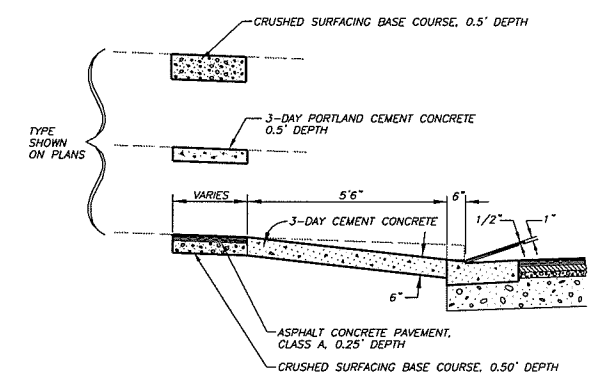

SECTION A-A

NTS

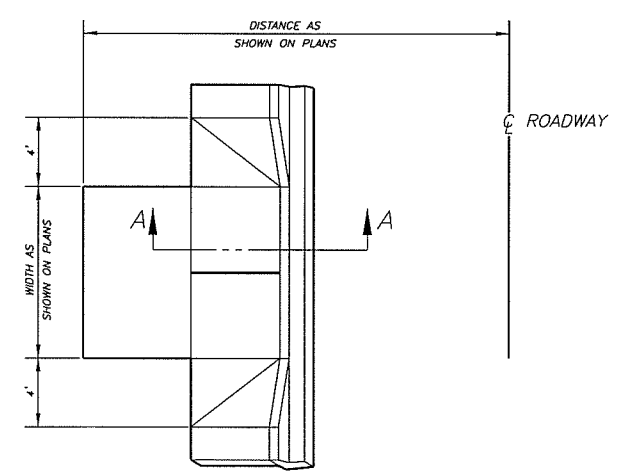

TYPICAL DRIVEWAY ENTRANCE

NTS

DESIGNED	ME
DRAWN	KB
CRP	301422
HOR.	NA
VERT.	NA
DATE	3/18/02
DWG:	RD02
SHEET	OF

CALL 48 HOURS BEFORE YOU DIG
1-800-553-4344
"It's the Law"
NORTHWEST UTILITIES NOTIFICATION CENTER

STATE OF WASHINGTON
MICHAEL M. EDRICK
29535
PROFESSIONAL ENGINEER
EXPIRES MAY 26, 2005

DESIGN & ENGINEERING DIVISION
DESIGN SECTION

ST. JOHNS RD (NE 50TH TO NE 72ND)
DETAILS

proud past, promising future
CLARK COUNTY
WASHINGTON

N:\CIP\PROJECTS\301422-STJohns-50thTo72nd\DESIGN\DWGS\RD1-2.dwg, Layout1 (2), 3/18/2004 4:38:24 PM, begleyk

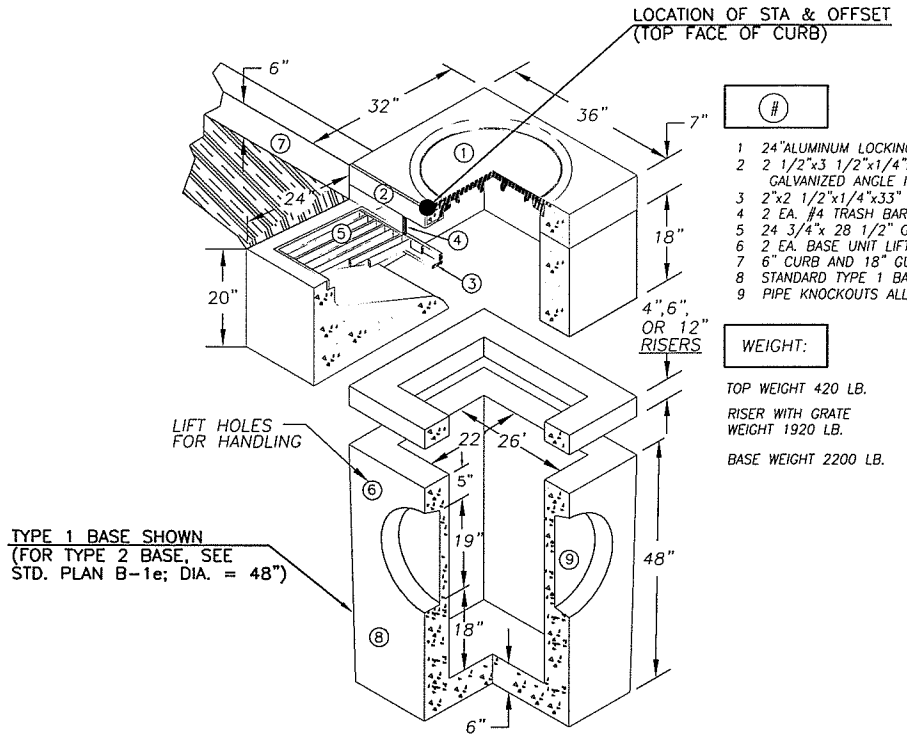

#

1 24"ALUMINUM LOCKING FRAME & COVER
2 2 1/2"x3 1/2"x1/4"x 35 7/8" GALVANIZED ANGLE IRON
3 2"x2 1/2"x1/4"x33" GALVANIZED ANGLE IRON
4 2 EA. #4 TRASH BARS @12" O.C.
5 24 3/4"x 28 1/2" GALVANIZED GRATE
6 2 EA. BASE UNIT LIFT HOLES
7 6" CURB AND 18" GUTTERS
8 STANDARD TYPE 1 BASE UNIT
9 PIPE KNOCKOUTS ALL FOUR SIDES.

WEIGHT:

TOP WEIGHT 420 LB.

RISER WITH GRATE
WEIGHT 1920 LB.

BASE WEIGHT 2200 LB.

NOTES:

1 REINFORCING FOR INLET UNIT 3 EA. #4 HORIZONTAL BARS.
2 REINFORCING FOR TOP UNIT 2 EA. #3 HORIZONTAL BARS
3 REINFORCING FOR INLET SLOPED BASE, 4x4 MESH
4 GUTTER IS TAPERED DOWN TO GRATE INLET
5 ALL CONCRETE IS 4,000 PSI MIN.
6 ALL REBAR MEETS ASTM A615 GRADE 60.

COMBINATION CURB INLET (TYPE 1 AND TYPE 2)

NTS

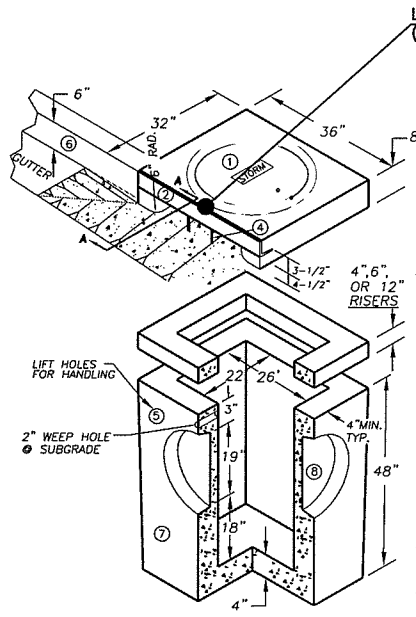

① 24" CAST IRON LOCKING FRAME & COVER
② 2 1/2"x3 1/2"x1/4"x 35 7/8" GALVANIZED ANGLE IRON
③ 2"x2 1/2"x1/4"x33" GALVANIZED ANGLE IRON
④ 2 EA. #4 TRASH BARS @ 9" O.C.
⑤ 2 EA. BASE UNIT LIFT HOLES
⑥ 6" CURB AND 12" GUTTERS
⑦ STANDARD TYPE 1 BASE UNIT
⑧ PIPE KNOCKOUTS ALL FOUR SIDES.

NOTES:

1. CURB INLET TO BE CONSTRUCTED IN ACCORDANCE WITH ASTM C478 & C890 UNLESS SHOWN ON PLANS OR NOTED IN STANDARD SPECIFICATIONS.
2. REINFORCING FOR INLET UNIT, 3 EA. #4 HORZONTAL BARS.
3. REINFORCING FOR TOP UNIT, 2 EA. #3 HORZONTAL BARS.
4. ALL REBAR TO MEET ASTM A615 GRADE 60.
5. AS AN ACCEPTABLE ALTERNATIVE TO REBAR, WELDED WIRE FABRIC HAVING A MIN. AREA OF 0.12 SQAURE INCHES PER FOOT MAY BE USED. WELDED WIRE FABRIC SHALL COMPLY TO ASTM A497. WIRE FABRIC SHALL NOT BE PLACED IN KNOCKOUTS.
6. ALL REINFORCED CAST-IN-PLACE CONCRETE SHALL BE CLASS 4,000.
7. PRECAST BASES SHALL BE FURNISHED WITH CUTOUTS OR KNOCKOUTS. KNOCKOUTS SHALL HAVE A WALL THICKNESS OF 2" MIN. ALL PIPE SHALL BE INSTALLED IN FACTORY PROVIDED KNOCKOUTS. UNUSED KNOCKOUTS NEED NOT BE GROUTED IF WALL IS LEFT INTACT.
8. KNOCKOUTS OR CUTOUT HOLE SIZE IS EQUAL TO PIPE OUTER DIAM. PLUS INLET WALL THICKNESS.
9. ROUND KNOCKOUTS MAY BE ON ALL 4 SIDES WITH MAX. DIAM. OF 17".
10. THE MAX. DEPTH FROM THE FINISHED GRADE TO THE PIPE INVERT IS 5'-0".
11. ANY PROTUDING ENDS OF PIPES SHALL BE TRIMMED FLUSH WITH THE INSIDE WALLS AND GROUTED TO THE SATISFACTION OF ENGINEER.
12. GUTTER IS TAPERED DOWN TO INLET.
13. INSTALL REMOVABLE APWA TYPE 60A TRAP OR EQUAL, SEE STD. PLAN D2.1.
14. CONTRACTOR SHALL HAVE THE OPTION OF FURNISHING PRECAST OR CAST-IN-PLACE INLET STRUCTURES, UNLESS SPECIFIED.

TYPE 1 CURB INLET

NTS

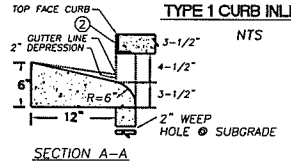

SECTION A-A

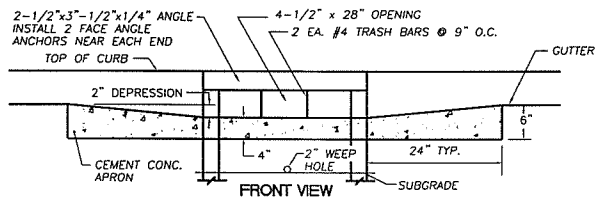

FRONT VIEW

CURB INLET

NTS

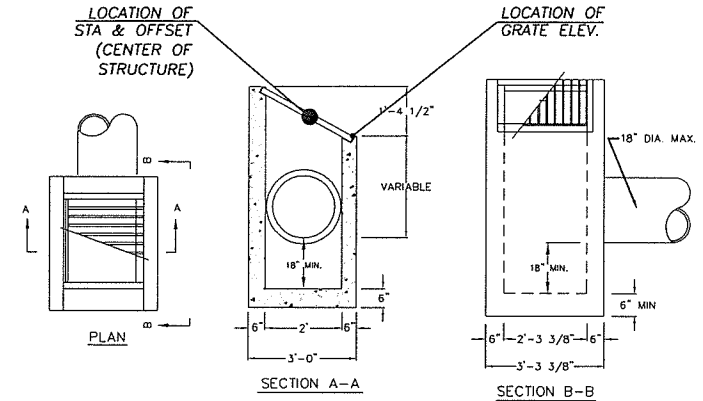

PLAN

SECTION A-A

SECTION B-B

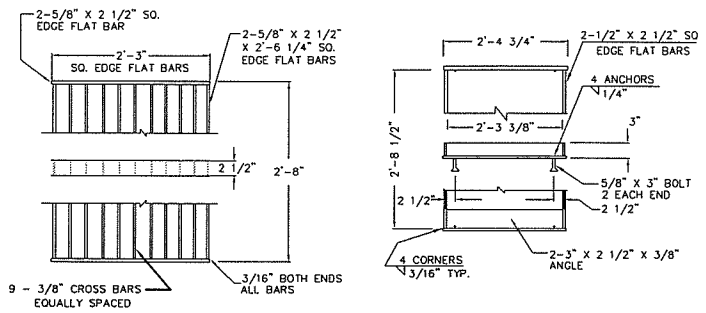

NOTES:

1. DITCH INLET CONSTRUCTION IN ACCORDANCE WITH ASTM C-478
2. CATCH BASIN, FRAME, AND GRATES SHALL BE FLAT BAR STEEL OR APPROVED EQUAL.
3. INSIDE FRAME DIMENSIONS: 2'-3 3/8"x 2'-8 1/2"".
4. 3/8" CROSS BARS SHALL BE FLUSH WITH THE GRATE SURFACE AND MAY BE FILLET WELDED, RESISTANCE WELDED OR ELECTROFORGED TO BEARING BARS.

DITCH INLET

NTS

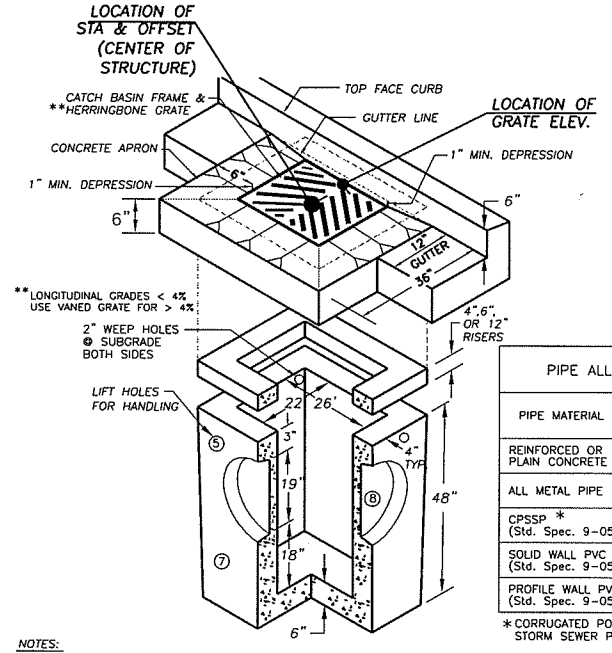

PIPE ALLOWANCES	
PIPE MATERIAL	MAXIMUM INSIDE DIAMETER
REINFORCED OR PLAIN CONCRETE	18"
ALL METAL PIPE	21"
CPSSP * (Std. Spec. 9-05.20	18"
SOLID WALL PVC (Std. Spec. 9-05.12(1)	21"
PROFILE WALL PVC (Std. Spec. 9-05.12(2)	21"

* CORRUGATED POLYETHYLENE STORM SEWER PIPE

NOTES:

1. CURB INLET TO BE CONSTRUCTED IN ACCORDANCE WITH ASTM C478 (AASHTO) M 199) & C890 UNLESS SHOWN ON PLANS OR NOTED IN STANDARD SPECIFICATIONS.
2. REINFORCING FOR INLET UNIT, 3 EA. #4 HORIZONTAL BARS.
3. REINFORCING FOR TOP UNIT, 2 EA. #3 HORIZONTAL BARS.
4. ALL REBAR TO MEET ASTM A615 GRADE 60.
5. AS AN ACCEPTABLE ALTERNATIVE TO REBAR, WELDED WIRE FABRIC HAVING A MIN. AREA OF 0.12 SQUARE INCHES PER FOOT MAY BE USED. WELDED WIRE FABRIC SHALL COMPLY TO ASTM A497. WIRE FABRIC SHALL NOT BE PLACED IN KNOCKOUTS.
6. ALL REINFORCED CAST-IN-PLACE CONCRETE SHALL BE CLASS 4,000.
7. PRECAST BASES SHALL BE FURNISHED WITH CUTOUTS OR KNOCKOUTS. KNOCKOUTS SHALL HAVE A WALL THICKNESS OF 2" MIN. ALL PIPE SHALL BE INSTALLED IN FACTORY PROVIDED KNOCKOUTS. UNUSED KNOCKOUTS NEED NOT BE GROUTED IF WALL IS LEFT INTACT.
8. KNOCKOUTS OR CUTOUT HOLE SIZE IS EQUAL TO PIPE OUTER DIAM. PLUS INLET WALL THICKNESS.
9. ROUND KNOCKOUTS MAY BE ON ALL 4 SIDES WITH MAX. DIAM. OF 20".
10. THE MAX. DEPTH FROM THE FINISHED GRADE TO THE PIPE INVERT IS 5'-0".
11. ANY PROTRUDING ENDS OF PIPES SHALL BE TRIMMED FLUSH WITH THE INSIDE WALLS AND GROUTED TO THE SATISFACTION OF ENGINEER.
12. CATCH BASIN FRAME AND GRATE SHALL BE IN ACCORDANCE WITH WDOT STANDARD SPECIFICATIONS AND MEET THE STRENGTH REQUIREMENTS OF FEDERAL SPECIFICATION RR-F-621D. MATING SURFACES SHALL BE FINISHED TO ASSURE NON-ROCKING FIT WITH ANY COVER POSITION.
13. FRAME MAY BE INSTALLED WITH FLANGE DOWN OR CAST INTO RISER.
13. INSTALL REMOVABLE APWA TYPE 60A TRAP OR EQUAL, SEE STD. PLAN D2.1.
14. CONTRACTOR SHALL HAVE THE OPTION OF FURNISHING PRECAST OR CAST-IN-PLACE INLET STRUCTURES, UNLESS SPECIFIED.

CATCH BASIN

NTS

OPEN CUT UTILITY TRENCH BACKFILL DETAIL (COLLECTOR OR ARTERIAL)

SURFACING:

1. All A.C.P. shall be saw cut to provide a straight, clean edge prior to paving.
2. The cut line shall be one continuous straight line from the outer excavation limits of manhole, valve box, etc. to manhole, valve box, etc.
3. Pave with an 0.5 ft. minimum compacted depth A.C.P., or match existing or design section, whichever is greater.
4. Lifts for A.C.P. shall be an 0.15 ft. minimum and 0.35 ft. maximum for non-surface lifts (0.25' maximum for surface lift); the temperature shall be 250 degree minimum, 350 degree maximum, compacted to 92% of the theoretical maximum.
5. All joints shall be tacked, sealed and sanded.
6. When surfacing exists on both sides of the trench, new A.C.P. will be a minimum of 40" wide.
7. Trench shall be plated until paved.
   *For longitudinal installation, full lane restoration shall be required or as directed by Clark County.
   For transverse installation refer to surfacing restoration of detail U6.

BASE COURSE:

1. 0.80 ft. minimum depth (1-1/4" minus) C.S.B.C. (W.S.D.O.T. approved material).
2. Compacted to 95% of maximum density. See trench zone.
3. Equivalent depth of A.T.B. may be substituted.
4. For transverse or diagonal trenches in existing roadway pavement, CDF (as defined in the standard specifications section 2-09.3(1)E) will be used for a minimum of 3' in depth or from 6" above the top of the pipe to the bottom of full pavement section which ever is less.

TRENCH ZONE:

1. Granular backfill as approved by local agency or W.S.D.O.T. specifications for granular backfill. Compacted to 95% of maximum density in the trench zone using method C compaction as per Section 2-03.3 (14).
2. Native material may be used if approved prior to construction.
3. Trench zone width -- see below.

PIPE ZONE:

1. Pipe zone material optional, or as specified by utility owner and approved by the Department.
2. 1.0 ft. maximum from top of the pipe.

CONDITIONS:

1. A copy of the permit and requirements shall be on the job site at all times.
2. The permit holder shall be responsible for all restoration and maintenance of ditches, shoulders, driveways, landscaping, etc.
3. Call Clark County at 397-2446 twenty-four hours prior to commencing work.

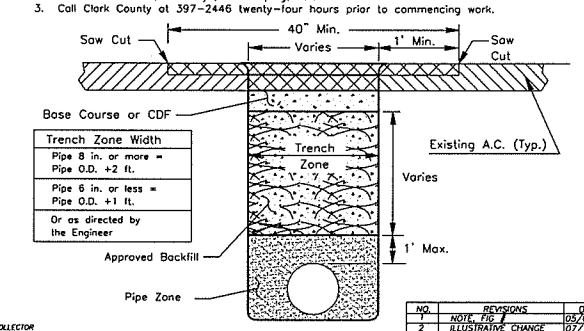

Trench Zone Width
Pipe 8 in. or more = Pipe O.D. +2 ft.
Pipe 6 in. or less = Pipe O.D. +1 ft.
Or as directed by the Engineer

DWG: TRENCH-COLLECTOR

NO.	REVISIONS	DATE	BY
1	NOTE, FIG. 2	05/02/01	BK
2	ILLUSTRATIVE CHANGE	07/10/01	BK

Department of Public Works
CLARK COUNTY WASHINGTON
proud past, promising future

OPEN CUT UTILITY TRENCH BACKFILL DETAIL
COLLECTOR OR ARTERIAL ROADWAY

APPROVED

Peter Capen 7/20/01
COUNTY ENGINEER DATE

U1

DESIGNED
DRAWN
DATE 07/10/01

PRELIMINARY

DESIGNED	JM
DRAWN	BAK
CRP	301422
HOR.	NA
VERT.	NA
DATE	6/24/03
DWG:	DD1
SHEET	OF

CALL 48 HOURS BEFORE YOU DIG 1-800-553-4344 "It's the Law" NORTHWEST UTILITIES NOTIFICATION CENTER

STATE OF WASHINGTON 31148 PROFESSIONAL ENGINEER EXPIRES: JULY 7, 2003

DESIGN & ENGINEERING DIVISION
DESIGN SECTION

ST JOHNS RD (NE 50TH TO NE 72ND)
DRAINAGE DETAILS I

proud past, promising future
CLARK COUNTY WASHINGTON

N:\CIP\PROJECTS\301422-STJohns-50thTo72nd\DESIGN\DWGS\DD1.dwg, Layout1, 3/18/2004 4:39:05 PM, begleyk

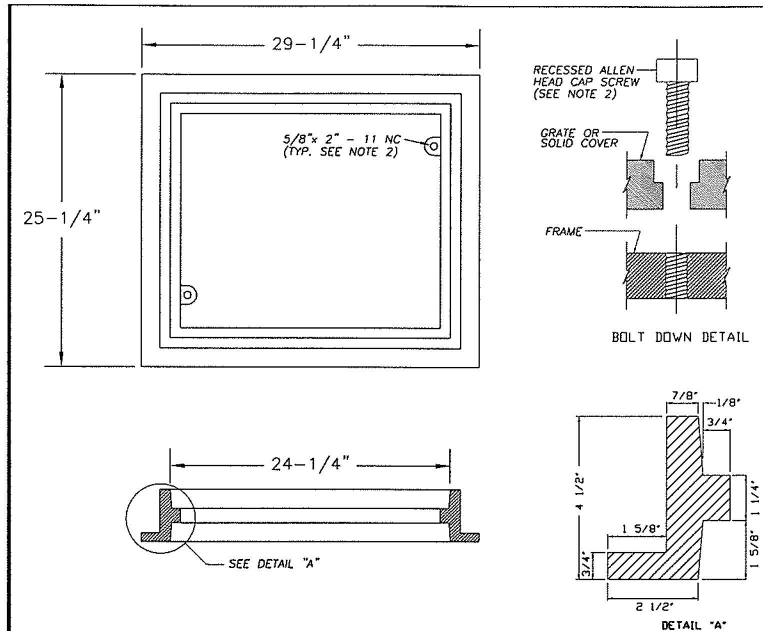

NOTES

1. THIS FRAME IS DESIGNED TO ACCOMODATE 20"x 24" GRATES OR COVERS AS SHOWN ON STD. PLANS D4.2 AND D4.3.
2. WHEN BOLT DOWN GRATES OR COVERS ARE SPECIFIED, PROVIDE TWO HOLES IN THE FRAME THAT ARE VERTICALLY ALIGNED WITH THE GRATE OR COVER SLOTS. TAP EACH HOLE TO ACCEPT A 5/8"x 2" - 11 NC ALLEN HEAD CAP SCREW. LOCATION OF BOLT DOWN HOLES VARIES AMONG DIFFERENT MANUFACTURERS.
3. REFER TO WSDOT STANDARD SPECIFICATION 9-05.15(2) FOR ADDITIONAL REQUIREMENTS.
4. SEE WSDOT STD. SPEC. SECTION 7.05.

REVERSIBLE FRAME FOR CATCH BASIN

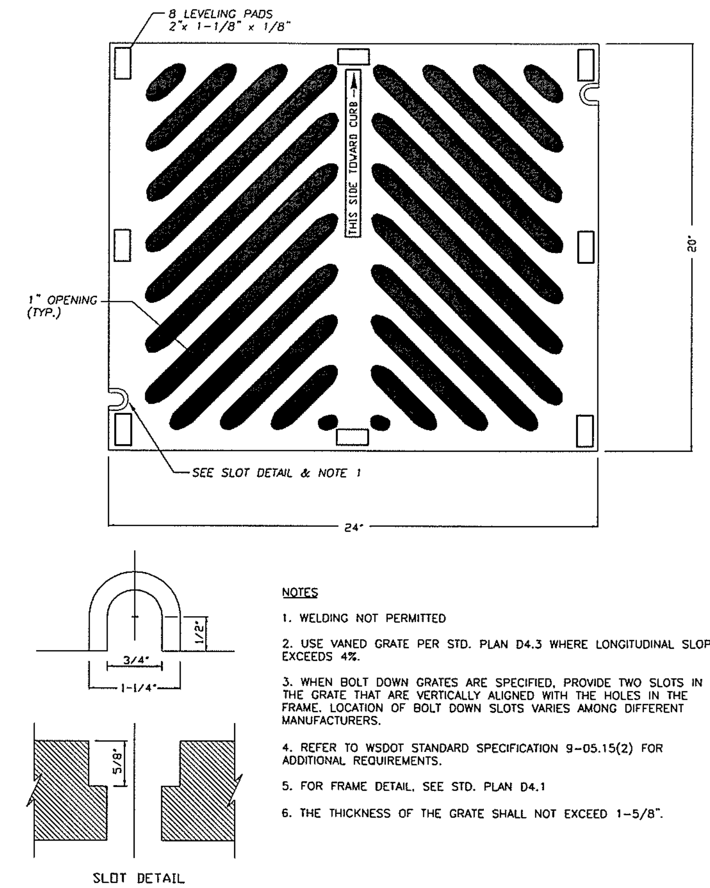

NOTES

1. WELDING NOT PERMITTED
2. USE VANED GRATE PER STD. PLAN D4.3 WHERE LONGITUDINAL SLOPE EXCEEDS 4%.
3. WHEN BOLT DOWN GRATES ARE SPECIFIED, PROVIDE TWO SLOTS IN THE GRATE THAT ARE VERTICALLY ALIGNED WITH THE HOLES IN THE FRAME. LOCATION OF BOLT DOWN SLOTS VARIES AMONG DIFFERENT MANUFACTURERS.
4. REFER TO WSDOT STANDARD SPECIFICATION 9-05.15(2) FOR ADDITIONAL REQUIREMENTS.
5. FOR FRAME DETAIL, SEE STD. PLAN D4.1
6. THE THICKNESS OF THE GRATE SHALL NOT EXCEED 1-5/8".

HERRINGBONE GRATE FOR CATCH BASIN

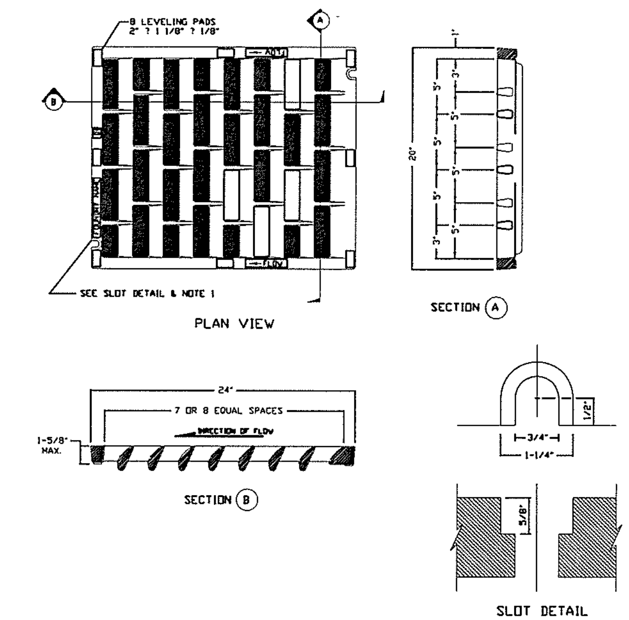

NOTES

1. WELDING NOT PERMITTED
2. USE HERRINGBONE GRATE PER STD. PLAN D4.2 WHERE LONGITUDINAL SLOPE IS LESS THAN 4%.
3. WHEN BOLT DOWN GRATES ARE SPECIFIED, PROVIDE TWO SLOTS IN THE GRATE THAT ARE VERTICALLY ALIGNED WITH THE HOLES IN THE FRAME. LOCATION OF BOLT DOWN SLOTS VARIES AMONG DIFFERENT MANUFACTURERS.
4. REFER TO WSDOT STANDARD SPECIFICATION 9-05.15(2) FOR ADDITIONAL REQUIREMENTS.
5. FOR FRAME DETAIL, SEE STD. PLAN D4.1

VANE GRATE FOR CATCH BASIN

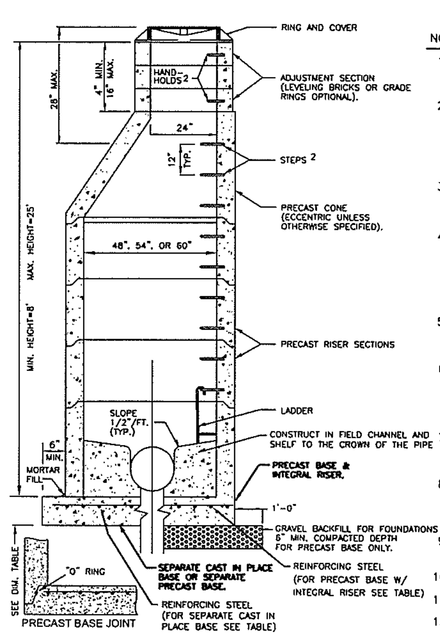

NOTES:

1. MANHOLES SHALL BE CONSTRUCTED IN ACCORDANCE WITH AASHTO M199 UNLESS OTHERWISE SHOWN ON PLANS OR NOTED IN THE WSDOT/APWA STANDARD SPECIFICATIONS.
2. HANDHOLDS IN ADJUSTMENT SECTION SHALL HAVE 3" MIN. CLEARANCE. STEPS IN MANHOLE SHALL HAVE 6" MIN. CLEARANCE. SEE PLAN NO. D1.5, "MANHOLE DETAILS". HANDHOLDS SHALL BE PLACED IN ALTERNATING GRADE RINGS OR LEVELING BRICK COURSE WITH A MIN. OF ONE HAND HOLD BETWEEN THE LAST STEP AND THE TOP OF THE MANHOLE.
3. ALL REINFORCED CAST-IN-PLACE CONCRETE SHALL BE CLASS 4000. ALL PRECAST CONCRETE SHALL BE CLASS 4000. NON-REINFORCED CONCRETE IN CHANNEL AND SHELF SHALL BE CLASS 3000.
4. PRECAST BASES SHALL BE FURNISHED WITH CUTOUTS OR KNOCKOUTS. KNOCKOUTS SHALL HAVE WALL THICKNESS OF 2" MIN. UNUSED KNOCKOUTS NEED NOT BE GROUTED IF WALL IS LEFT INTACT. PIPES SHALL BE INSTALLED ONLY IN FACTORY KNOCKOUTS UNLESS OTHERWISE APPROVED BY THE ENGINEER.
5. KNOCKOUT OR CUTOUT HOLE SIZE SHALL EQUAL PIPE OUTER DIAM. PLUS MANHOLE WALL THICKNESS. SEE MANHOLE DIMENSION TABLE BELOW.
6. MANHOLE RINGS AND COVERS SHALL BE IN ACCORDANCE WITH SEC. 7.05 AND MEET THE STRENGTH REQUIREMENTS OF FEDERAL SPECIFICATION RR-F-621D. MATING SURFACES SHALL BE FINISHED TO ASSURE NON-ROCKING FIT WITH ANY COVER POSITION.
7. ALL BASE REINFORCING STEEL SHALL HAVE A MIN. YIELD STRENGTH OF 60,000 PSI AND BE PLACED IN THE UPPER HALF OF THE BASE WITH 1" MIN. CLEARANCE.
8. FOR HEIGHTS OF 12' OR LESS, MIN. SOIL BEARING VALUE SHALL EQUAL 3,300 POUNDS PER SQUARE FOOT. FOR HEIGHTS OVER 12', MIN. SOIL BEARING VALUE SHALL EQUAL 3,800 POUNDS PER SQUARE FOOT.
9. FOR DETAILS SHOWING GRADE RING, LADDER, STEPS, HANDHOLDS, AND TOP SLABS, SEE PLAN NO. D1.5, "MANHOLE DETAILS."
10. INSIDE DROP MAXIMUM TO BE 4' VERTICAL DISTANCE I.E. TO I.E.
11. KNOCKOUTS TO BE USED WHEN STUB OUT PIPE IS 3' OR LESS.
12. MINIMUM 0.20' FALL BETWEEN INLET AND OUTLET
13. SEE THE WSDOT/APWA STANDARD SPECIFICATIONS SEC. 7-05.3 FOR JOINT REQUIREMENTS.

MANHOLE DIMENSION TABLE

DIA.	THICKNESS WALL	THICKNESS BASE	MAXIMUM KNOCKOUT SIZE	MINIMUM DISTANCE BETWEEN KNOCKOUTS	BASE REINFORCING STEEL SQ IN/FT EACH DIRECTION INTEGRAL BASE	SEPARATE BASE
48"	4"	6"	36"	8"	0.15	0.23
54"	4.5"	8"	42"	8"	0.19	0.19
60"	5"	8"	48"	8"	0.25	0.25

MANHOLE TYPE 1
48", 54" & 60"

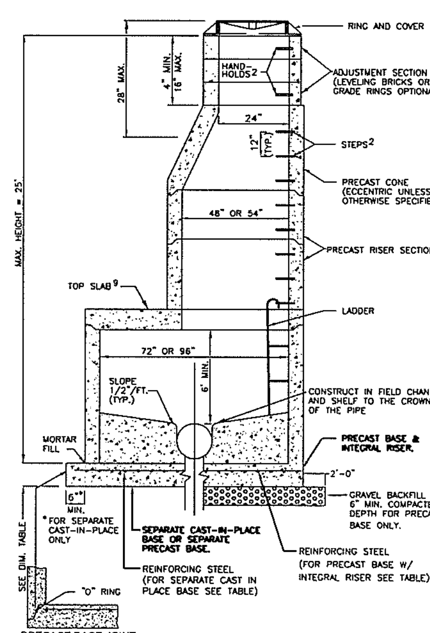

NOTES:

1. MANHOLES SHALL BE CONSTRUCTED IN ACCORDANCE WITH AASHTO M199 UNLESS OTHERWISE SHOWN ON PLANS OR NOTED IN THE WSDOT/APWA STANDARD SPECIFICATIONS.
2. HANDHOLDS IN ADJUSTMENT SECTION SHALL HAVE 3" MIN. CLEARANCE. STEPS IN MANHOLE SHALL HAVE 6" MIN. CLEARANCE. SEE PLAN NO. D1.5, "MANHOLE DETAILS". HANDHOLDS SHALL BE PLACED IN ALTERNATING GRADE RINGS OR LEVELING BRICK COURSE WITH A MIN. OF ONE HAND HOLD BETWEEN THE LAST STEP AND THE TOP OF THE MANHOLE.
3. ALL REINFORCED CAST-IN-PLACE CONCRETE SHALL BE CLASS 4000. ALL PRECAST CONCRETE SHALL BE CLASS 4000. NON-REINFORCED CONCRETE IN CHANNEL AND SHELF SHALL BE CLASS 3000.
4. KNOCKOUTS. KNOCKOUTS SHALL HAVE WALL THICKNESS OF 2" MIN. UNUSED KNOCKOUTS NEED NOT BE GROUTED IF WALL IS LEFT INTACT. PIPES SHALL BE INSTALLED ONLY IN FACTORY KNOCKOUTS UNLESS OTHERWISE APPROVED BY THE ENGINEER.
5. KNOCKOUT OR CUTOUT HOLE SIZE SHALL EQUAL PIPE OUTER DIAM. PLUS MANHOLE WALL THICKNESS. SEE MANHOLE DIMENSION TABLE BELOW.
6. MANHOLE RINGS AND COVERS SHALL BE IN ACCORDANCE WITH SEC. 7.05 AND MEET THE STRENGTH REQUIREMENTS OF FEDERAL SPECIFICATION RR-F-621D. MATING SURFACES SHALL BE FINISHED TO ASSURE NON-ROCKING FIT WITH ANY COVER POSITION.
7. ALL BASE REINFORCING STEEL SHALL HAVE A MIN. YIELD STRENGTH OF 60,000 PSI AND BE PLACED IN THE UPPER HALF OF THE BASE WITH 1" MIN. CLEARANCE.
8. FOR HEIGHTS OF 12' OR LESS, MIN. SOIL BEARING VALUE SHALL EQUAL 3,300 POUNDS PER SQUARE FOOT. FOR HEIGHTS OVER 12', MIN. SOIL BEARING VALUE SHALL EQUAL 3,800 POUNDS PER SQUARE FOOT.
9. FOR DETAILS SHOWING GRADE RING, LADDER, STEPS, HANDHOLDS, AND TOP SLABS, SEE PLAN NO. D1.5, "MANHOLE DETAILS."
10. INSIDE DROP MAXIMUM TO BE 4' VERTICAL DISTANCE I.E. TO I.E.
11. KNOCKOUTS TO BE USED WHEN STUB OUT PIPE IS 3' OR LESS.
12. MINIMUM 0.20' FALL BETWEEN INLET AND OUTLET
13. SEE THE WSDOT/APWA STANDARD SPECIFICATIONS SEC. 7-05.3 FOR JOINT REQUIREMENTS.

MANHOLE DIMENSION TABLE

DIA.	THICKNESS WALL	THICKNESS BASE	MAXIMUM KNOCKOUT SIZE	MINIMUM DISTANCE BETWEEN KNOCKOUTS	BASE REINFORCING STEEL SQ IN/FT EACH DIRECTION INTEGRAL BASE	SEPARATE BASE
72"	6"	8"	60"	12"	0.24	0.35
96"	8"	12"	84"	12"	0.29	0.39

MANHOLE TYPE 2
72" & 96"

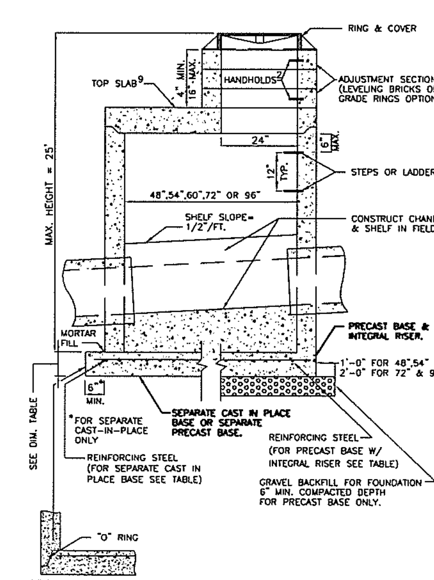

NOTES:

1. MANHOLES SHALL BE CONSTRUCTED IN ACCORDANCE WITH AASHTO M199 UNLESS OTHERWISE SHOWN ON PLANS OR NOTED IN THE WSDOT/APWA STANDARD SPECIFICATIONS.
2. HANDHOLDS IN ADJUSTMENT SECTION SHALL HAVE 3" MIN. CLEARANCE. STEPS IN MANHOLE SHALL HAVE 6" MIN. CLEARANCE. SEE PLAN D1.5, "MANHOLE DETAILS." HANDHOLDS SHALL BE PLACED IN ALTERNATING GRADE RINGS OR LEVELING BRICK COURSE WITH A MIN. OF ONE HANDHOLD BETWEEN THE LAST STEP AND THE TOP OF THE MANHOLE.
3. ALL REINFORCED CAST-IN-PLACE CONCRETE SHALL BE CLASS4000. NON-REINFORCED CONCRETE IN CHANNEL AND SHELF SHALL BE CLASS 3000. ALL PRECAST CONCRETE SHALL BE CLASS 4000.
4. PRECAST BASES SHALL BE FURNISHED WITH CUTOUTS OR KNOCKOUTS. KNOCKOUTS SHALL HAVE WALL THICKNESS OF 2" MIN. UNUSED KNOCKOUTS NEED NOT BE GROUTED IF WALL IS LEFT INTACT. PIPES SHALL BE INSTALLED ONLY IN FACTORY KNOCKOUTS UNLESS OTHERWISE APPROVED BY THE ENGINEER.
5. KNOCKOUT OR CUTOUT HOLE SIZE SHALL EQUAL PIPE OUTER DIAM. PLUS MANHOLE WALL THICKNESS. SEE MANHOLE DIMENSION TABLE BELOW.
6. MANHOLE RINGS AND COVERS SHALL BE IN ACCORDANCE WITH SEC. 7.05 AND MEET THE STRENGTH REQUIREMENTS OF FEDERAL SPECIFICATION RR-F-621D. MATING SURFACES SHALL BE FINISHED TO ASSURE NON-ROCKING FIT WITH ANY COVER POSITION.
7. ALL BASE REINFORCING STEEL SHALL HAVE A MIN. YIELD STRENGTH OF 60,000 PSI AND BE PLACED IN THE UPPER HALF OF THE BASE WITH 1" MIN. CLEARANCE.
8. FOR HEIGHTS OF 12' OR LESS, MIN. SOIL BEARING VALUE SHALL EQUAL 3,300 POUNDS PER SQUARE FOOT. FOR HEIGHTS OVER 12', MIN. SOIL BEARING VALUE SHALL EQUAL 3,800 POUNDS PER SQUARE FOOT.
9. FOR DETAILS SHOWING GRADE RING, LADDER, STEPS, HANDHOLDS, AND TOP SLABS, SEE PLAN D1.5, "MANHOLE DETAILS."
10. INSIDE DROP MAXIMUM TO BE 4' VERTICAL DISTANCE I.E. TO I.E.
11. KNOCKOUTS TO BE USED WHEN STUB OUT PIPE IS 3' OR LESS.
12. MINIMUM 0.20' FALL BETWEEN INLET AND OUTLET
13. SEE THE WSDOT/APWA STANDARD SPECIFICATIONS SEC. 7-05.3 FOR JOINT REQUIREMENTS.

MANHOLE DIMENSION TABLE

DIA.	THICKNESS WALL	THICKNESS BASE	MAXIMUM KNOCKOUT SIZE	MINIMUM DISTANCE BETWEEN KNOCKOUTS	BASE REINFORCING STEEL SQ IN/FT EACH DIRECTION INTEGRAL BASE	SEPARATE BASE
48"	4"	6"	36"	8"	0.15	0.23
54"	4.5"	8"	42"	8"	0.19	0.19
60"	5"	8"	48"	8"	0.25	0.25
72"	6"	8"	60"	12"	0.24	0.35
96"	8"	12"	84"	12"	0.29	0.39

MANHOLE TYPE 3
48", 54", 60", 72" & 96"

PRELIMINARY

DESIGN & ENGINEERING DIVISION
DESIGN SECTION

ST JOHNS RD (NE 50TH TO NE 72ND)
DRAINAGE DETAILS II

CLARK COUNTY WASHINGTON
proud past, promising future

JOHN MILNE, STATE OF WASHINGTON, 31148, REGISTERED PROFESSIONAL ENGINEER
EXPIRES: JULY 7, 2003

CALL 48 HOURS BEFORE YOU DIG
1-800-553-4344
"It's the Law"
NORTHWEST UTILITIES NOTIFICATION CENTER

DESIGNED	JM
DRAWN	KB
CRP	301422
HOR.	NTS
VERT.	NTS
DATE	6/24/03
DWG:	DD2
SHEET	OF

Fed. Aid No.
STPR 1068(001)

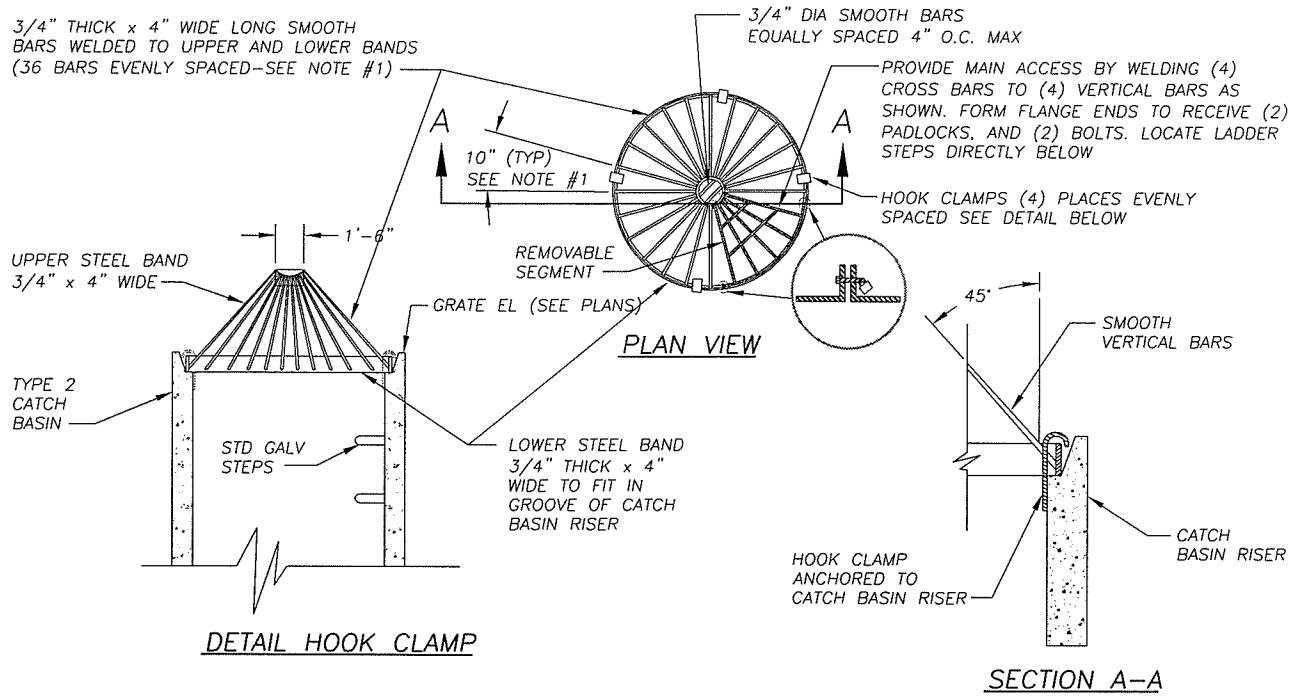

DROP INLET TRASH RACK

NTS

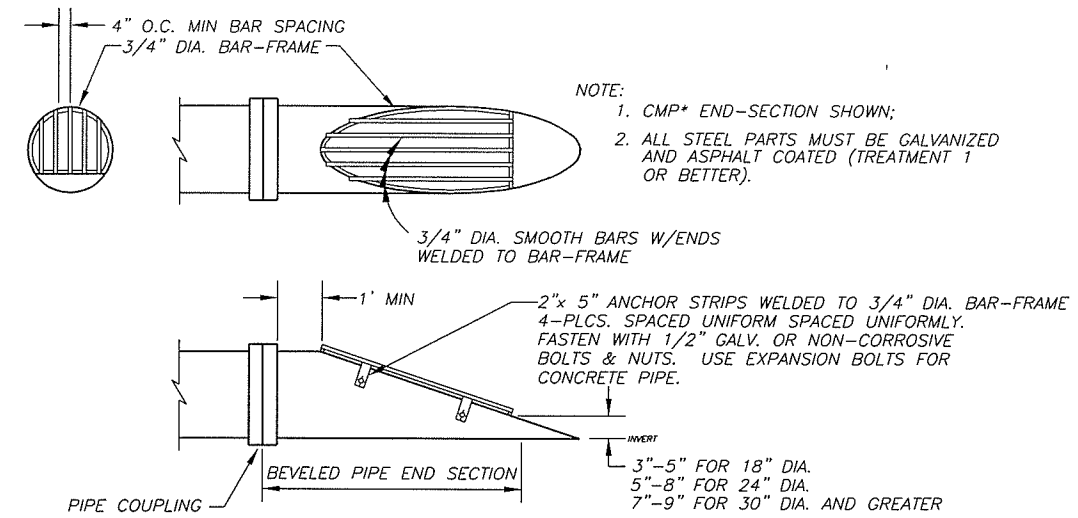

DEBRIS RACK

NTS

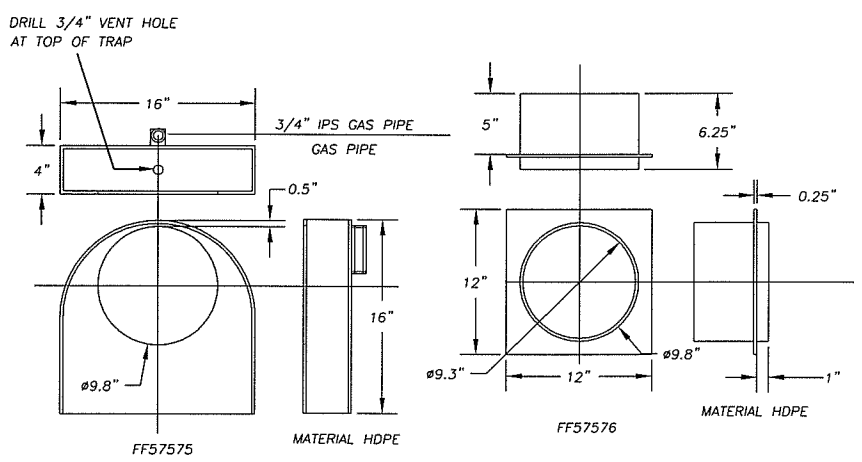

LOW PROFILE ELBOW

NTS

ELBOW INSERT

NTS

ZYMARK BRAND OR EQUIVALENT

NOTE: FOR 12" DIP TRAP USE 12" * 90 DEG. DIP ELBOW

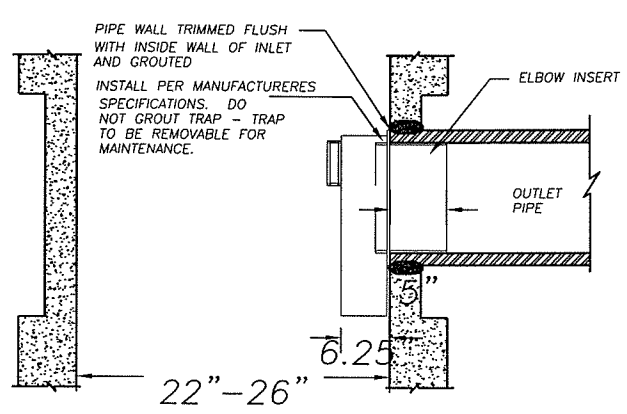

CATCH BASIN OUTLET PIPE TRAP

NTS

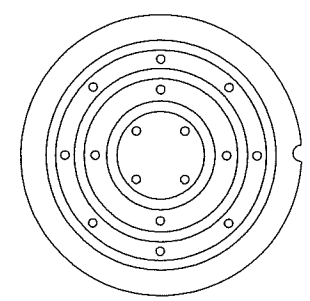

COVER

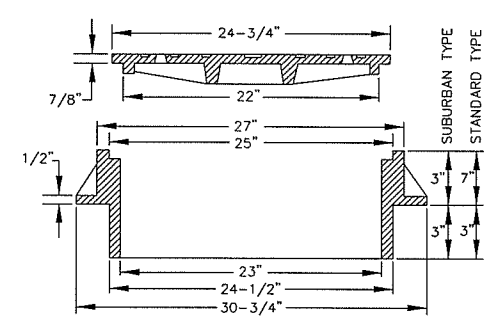

NOTES:

1. USE SUBURBAN TYPE ONLY IN NON-TRAFFIC AREAS, AND ONLY WITH APPROVAL BY COUNTY.
2. COVER MATERIAL TO BE DUCTILE IRON ASTM A536 GRADE 80-55-06
3. FRAME MATERIAL TO BE GRAY CAST IRON ASTM A-48 CLASS 30.
4. SEE WSDOT STANDARD SPECIFICATIONS SEC. 7.05
5. COVER AND FRAME TO BE MACHINED TO A TRUE BEARING ALL AROUND.
6. NOTCH LID FOR LIFTING HOOK.

STANDARD MANHOLE FRAME AND COVER

NTS

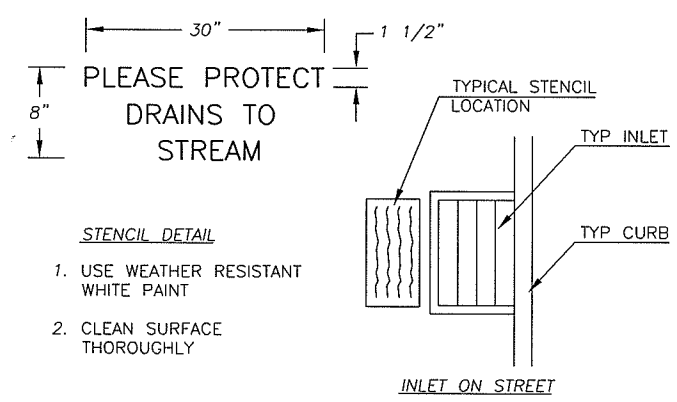

INLET STENCIL DETAIL

NTS

PRELIMINARY

DESIGNED	JM
DRAWN	KB
CRP	301422
HOR.	NA
VERT.	NA
DATE	6/24/03
DWG:	DD3
SHEET	OF

CALL 48 HOURS BEFORE YOU DIG 1-800-553-4344 "It's the Law" NORTHWEST UTILITIES NOTIFICATION CENTER

STATE OF WASHINGTON WILLIAM J. MEYER 31148 PROFESSIONAL ENGINEER EXPIRES JULY 2, 2003

DESIGN & ENGINEERING DIVISION
DESIGN SECTION

ST JOHNS RD (NE 50TH TO NE 72ND)
DRAINAGE DETAILS III

proud past, promising future
CLARK COUNTY WASHINGTON

N:\CIP\PROJECTS\301422-STJohns-50thTo72nd\DESIGN\DWGS\DD3.dwg, Layout1, 3/18/2004 4:40:32 PM, begleyk

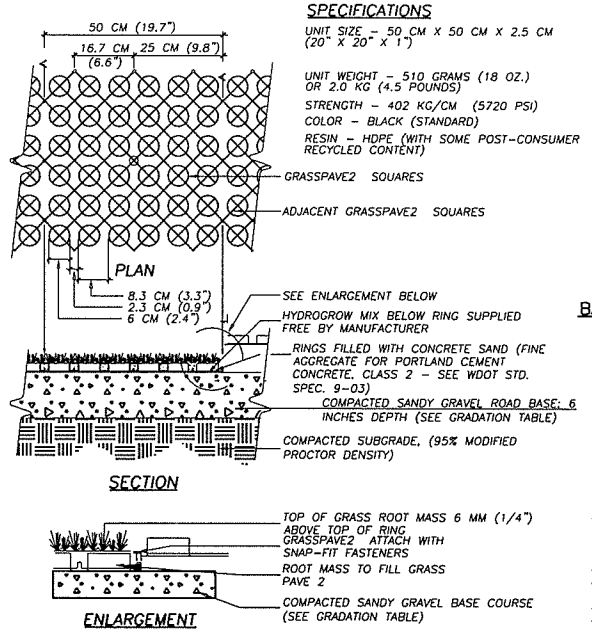

SPECIFICATIONS

UNIT SIZE – 50 CM X 50 CM X 2.5 CM (20" X 20" X 1")

UNIT WEIGHT – 510 GRAMS (18 OZ.) OR 2.0 KG (4.5 POUNDS)

STRENGTH – 402 KG/CM (5720 PSI)

COLOR – BLACK (STANDARD)

RESIN – HDPE (WITH SOME POST-CONSUMER RECYCLED CONTENT)

BASE COURSE GRADATION

SEIVE SIZE	% PASSING
3/4"	72"
3/8"	24"
#4 SCREEN	24"
#40 SCREEN	256.07
#200 SCREEN	258.07

NOTES

1. POROUS PAVERS SHALL BE "GRASSPAVE 2" OR APPROVED EQUAL ("GRASSPAVE" SHOWN)
2. INSTALL PER MANUFACTURERS INSTRUCTIONS AND AS DIRECTED BY ENGINEER.
3. GRASS MIX AS FOR STORMWATER FACILITY
4. PROVISION & INSTALLATION OF ALL MATERIALS INCLUDING BASE COURSE INCLUDED IN COST FOR POROUS PAVER BID ITMES.

POROUS PAVER DETAIL

NOT TO SCALE

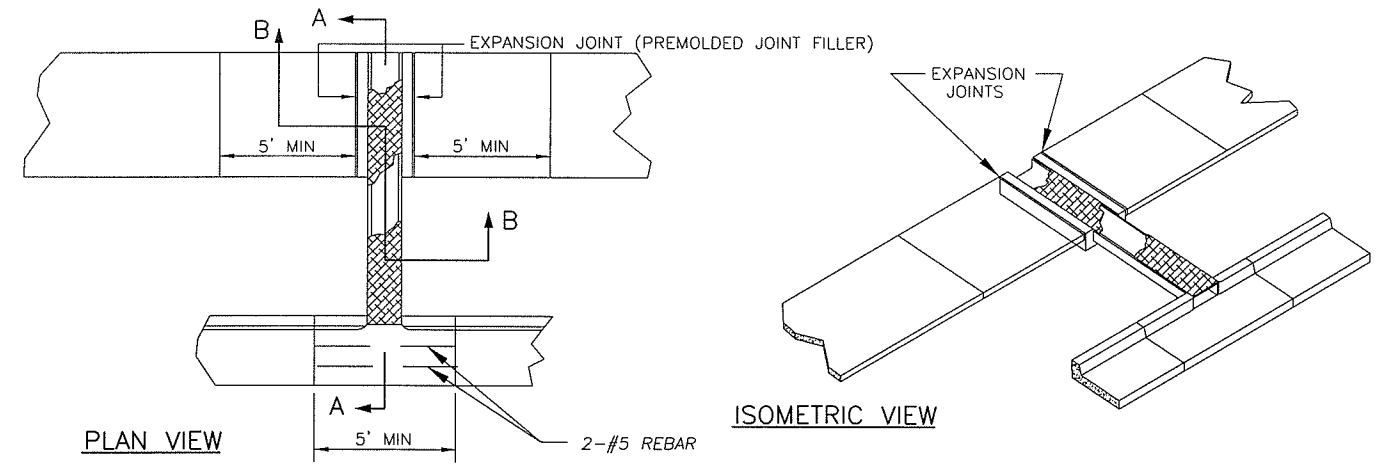

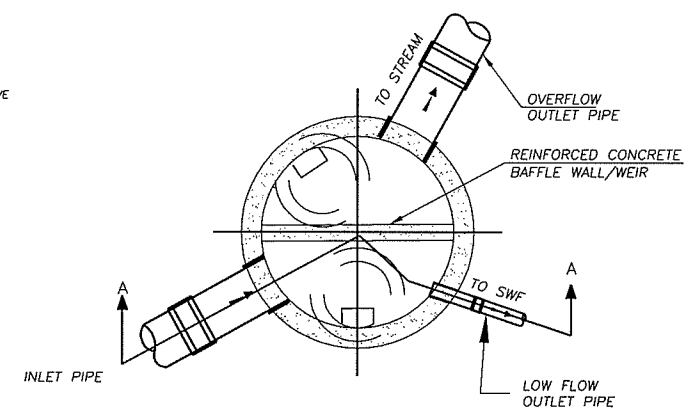

PLAN

N.T.S

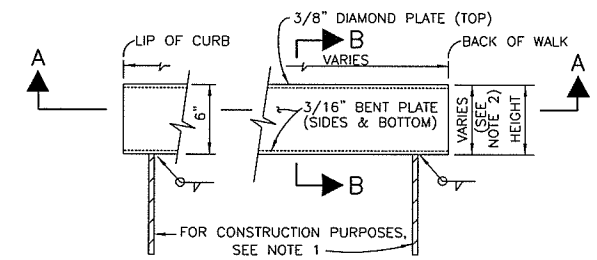

SIDEWALK CHASE ELEVATION

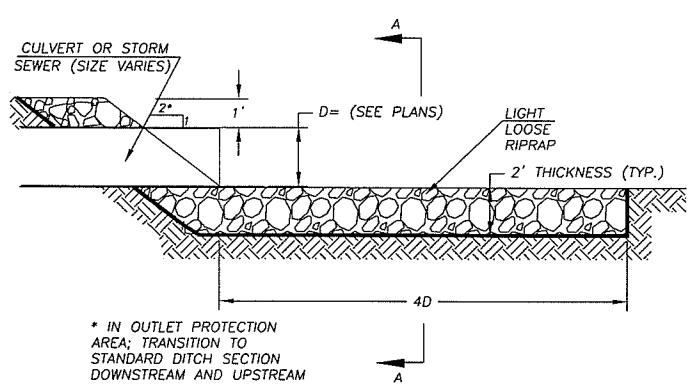

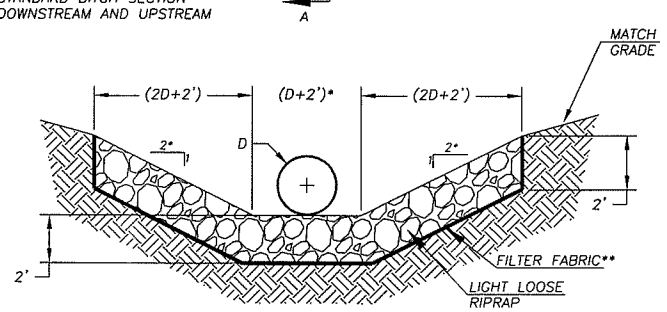

SECTION A-A

** CONSTRUCTION GEOTEXTILE FOR SEPARATION OR SOIL STABILIZATION (WSDOT 9-33, TABLE 3)

OUTFALL DISCHARGE PROTECTION

N.T.S.

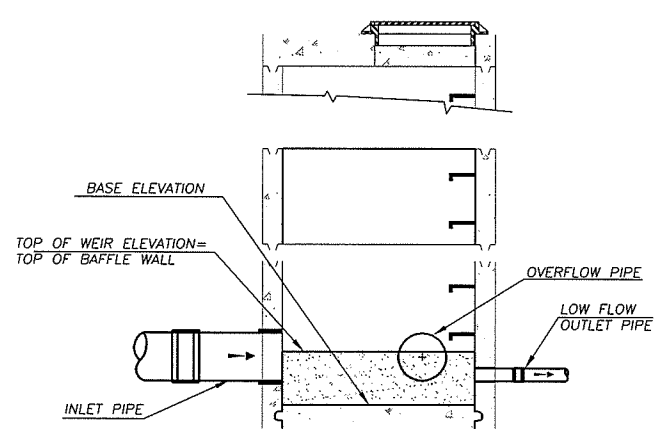

SECTION A-A

N.T.S

NOTES:
1. SEE WDOT STANDARD PLAN B-3A. NO ORIFICES OR ELBOWS REQUIRED IN BAFFLE WALL.
2. DUAL MANHOLE OPENINGS REQUIRED.

MHE1 (FLOW SPLITTER) DETAIL

(Modified Catch Basin Type 2)

SECTION A-A

FLOW TO GUTTER

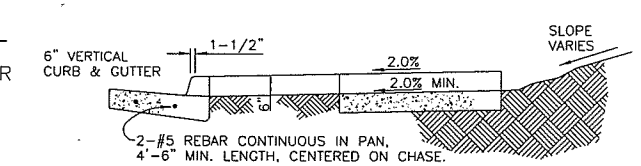

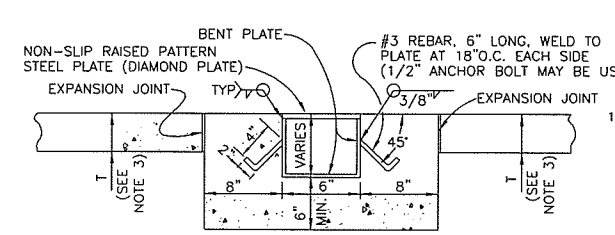

SECTION B-B

NOTES

1. 18"-#4 REBAR: WELD ONE BAR NEAR EACH END OF TUBE; SUPPLY AT LEAST TWO BARS PER TUBE, MORE IF CONTRACTOR DEEMS APPROPRIATE. REBAR IS USED TO SUPPORT AND ALIGN TUBE UNTIL CONCRETE IS PLACED.
2. HEIGHT OF SIDEWALK CHASE SHALL MATCH CURB HEIGHT, I.E., HEIGHT FROM FLOWLINE TO TOP OF CURB.
3. T = THICKNESS OF WALK.
4. ALL STEEL SHALL BE GALVANIZED

SIDEWALK CHASE

PRELIMINARY

DESIGNED	JM
DRAWN	KB
CRP	301422
HOR.	NA
VERT.	NA
DATE	6/24/03
DWG:	DD4
SHEET	OF

CALL 48 HOURS BEFORE YOU DIG 1-800-553-4344 "It's the Law" NORTHWEST UTILITIES NOTIFICATION CENTER

STATE OF WASHINGTON JAMES MILNE 31148 REGISTERED PROFESSIONAL ENGINEER EXPIRES JULY 7, 2003

DESIGN & ENGINEERING DIVISION
DESIGN SECTION

ST JOHNS RD (NE 50TH TO NE 72ND)
DRAINAGE DETAILS IV

proud past, promising future
CLARK COUNTY WASHINGTON

N:\CIP\PROJECTS\301422-STJohns-50thTo72nd\DESIGN\DWGS\DD4.dwg, Layout1, 3/18/2004 4:41:09 PM, begleyk

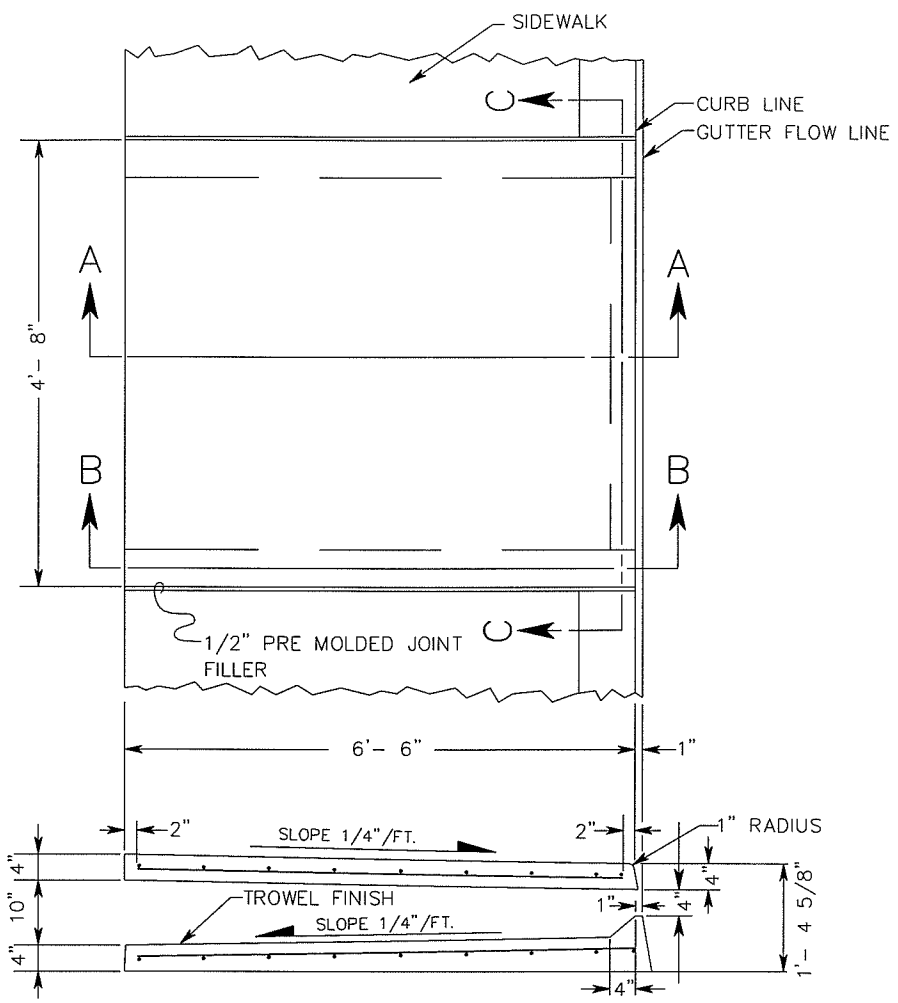

SECTION A-A

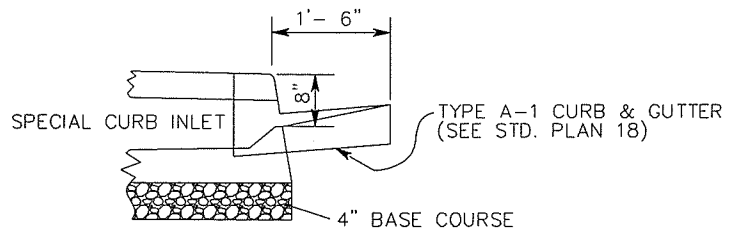

GENERAL NOTES

1. CURB INLET SHALL BE CONSTRUCTED IN ACCORDANCE WITH ASTM C 478 (AASHTO M 199) & ASTM C 890 UNLESS OTHERWISE SHOWN ON PLANS OR NOTED IN THE PROJECT SPECIAL PROVISIONS.
2. TOP SURFACE TO BE BROOM FINISHED.
3. ALL EXTERNAL EDGES NOT LABELED SHALL BE TROWELLED WITH 1/4" RADIUS EDGER.

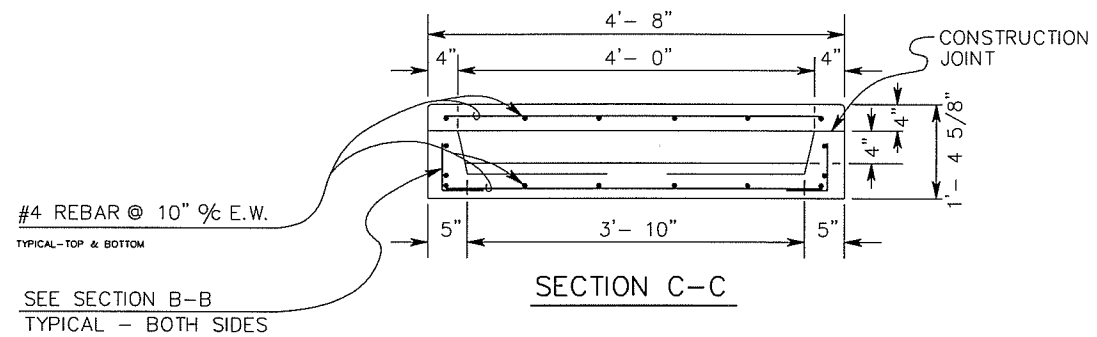

SECTION C-C

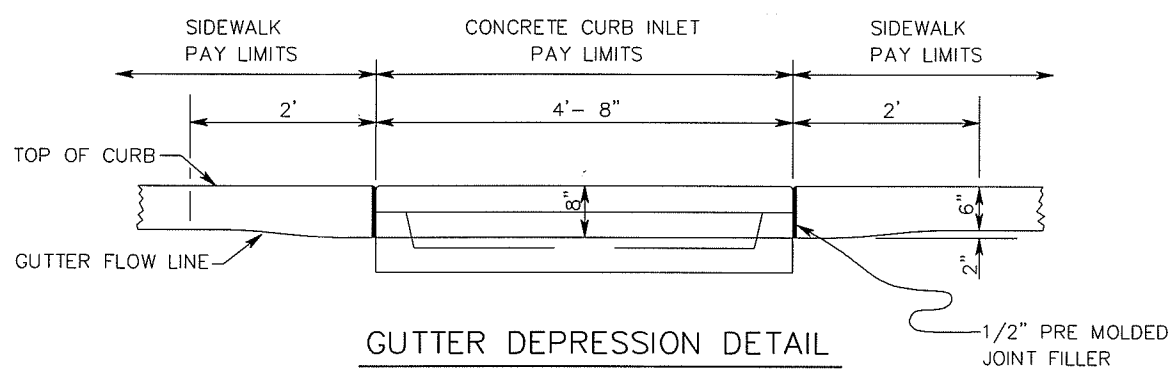

GUTTER DEPRESSION DETAIL

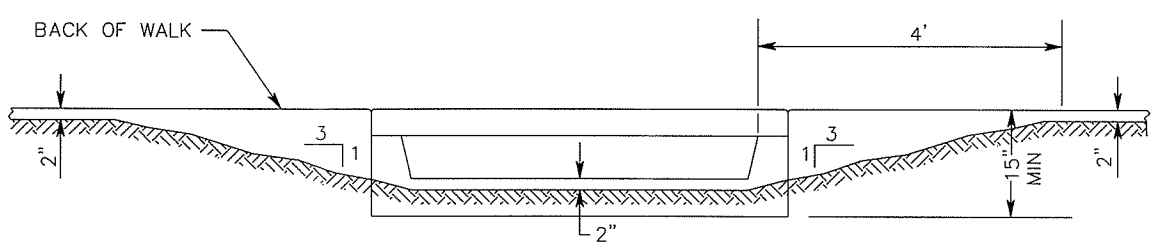

OUTLET SWALE GRADING DETAIL

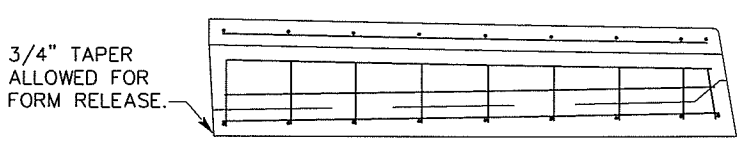

SECTION B-B
REBAR PLACEMENT

SPECIAL CURB INLET

SPECIAL CURB INLET AND OUTLET BEHIND WALK TO SWALE

PRELIMINARY

DESIGNED	JM
DRAWN	KB
CRP	301422
HOR.	NA
VERT.	NA
DATE	6/24/03
DWG:	DD5
SHEET	OF

CALL 48 HOURS BEFORE YOU DIG 1-800-553-4344 "It's the Law" NORTHWEST UTILITIES NOTIFICATION CENTER

STATE OF WASHINGTON JOHN WILLIAM ROGERSON 31148 PROFESSIONAL ENGINEER EXPIRES JULY 2, 2003

DESIGN & ENGINEERING DIVISION
DESIGN SECTION

ST JOHNS ROAD (NE 50TH TO NE 72ND)
DRAINAGE DETAILS V

proud past, promising future
CLARK COUNTY WASHINGTON

N:\CIP\PROJECTS\301422-STJohns-50thTo72nd\DESIGN\DWGS\DD5.dwg, Layout1, 3/18/2004 4:41:47 PM, begleyk

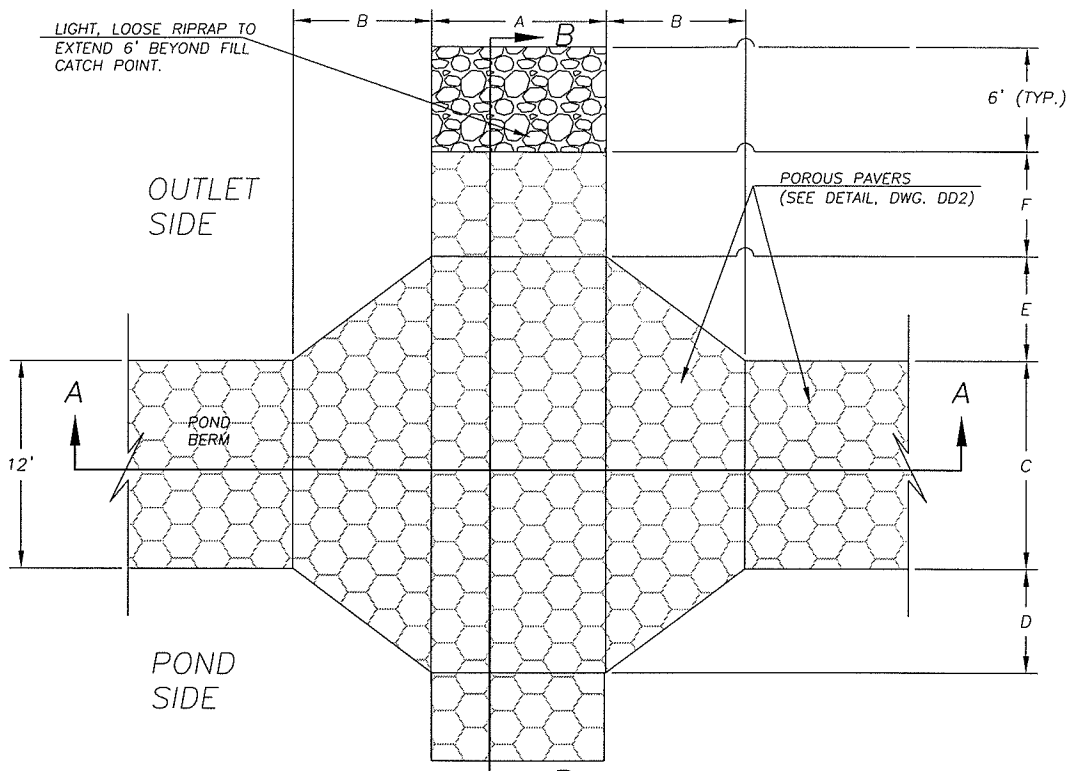

PLAN VIEW
NTS

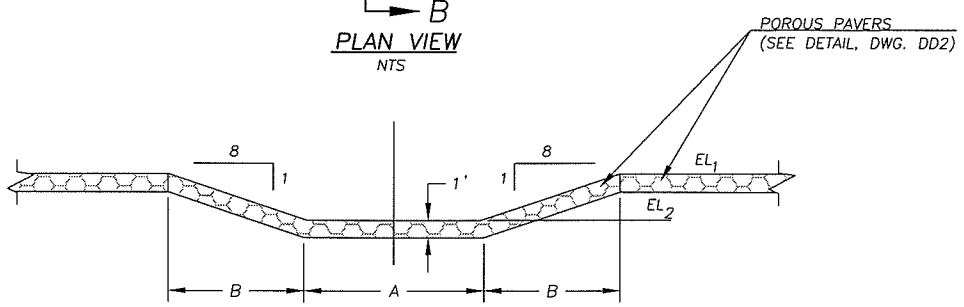

SECTION A–A
NTS

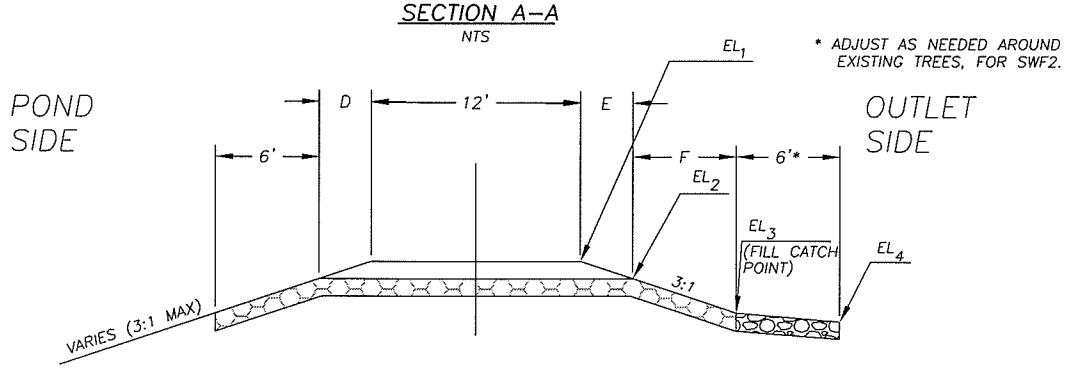

SECTION B–B
NTS

LOCATION	A	B	C	D	E	F	EL_1	EL_2	EL_3	EL_4
WMA1 (WEST END)	10'	2.4'	12'	0.9'	0.9'	7.5'	272.00	271.70	269.2±	268.3±

OVERFLOW WEIR DETAILS

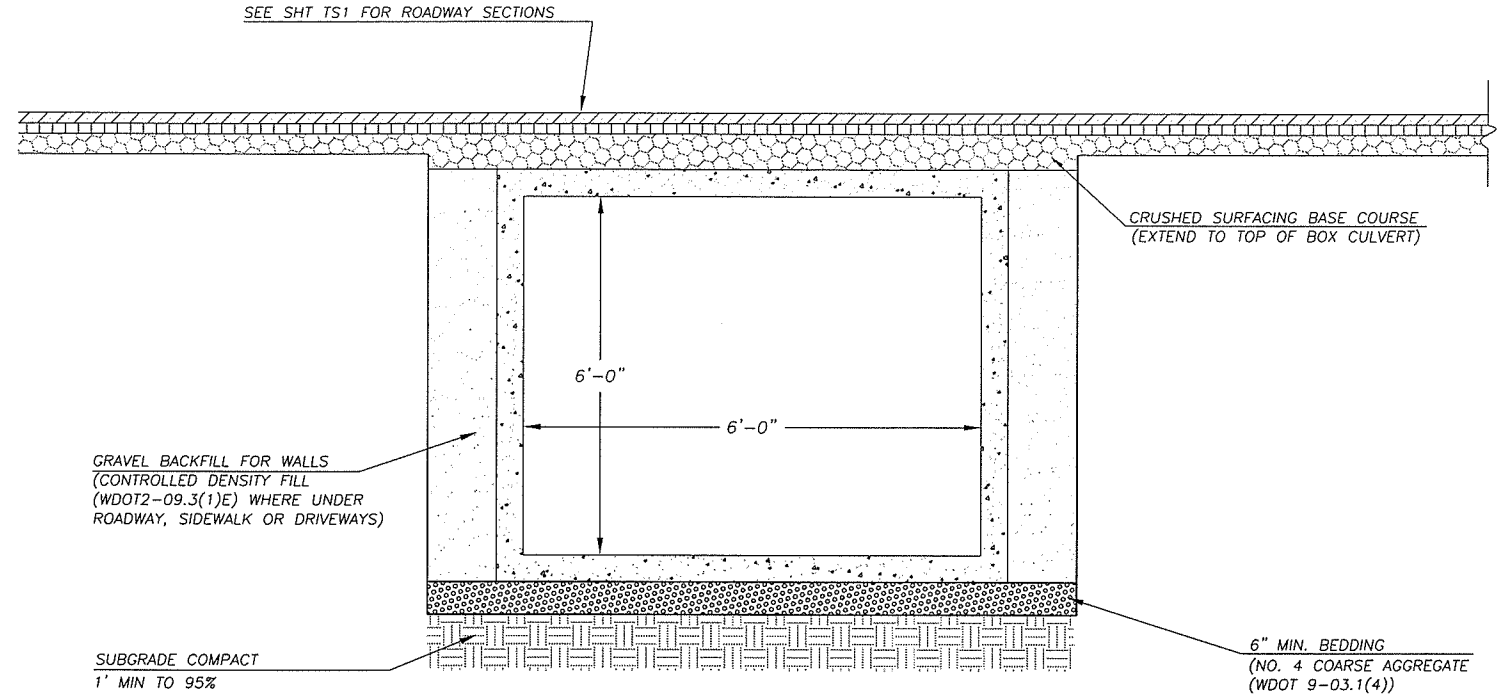

NOTES:

1. CONTRACTOR SHALL FURNISH ALL SOILS INFORMATION NECESSARY, COMPLETE STRUCTURAL DESIGN AND SUBMIT DETAILED SHOP DRAWINGS FOR ENGINEER'S REVIEW AND APPROVAL. BOTH PRE-CAST AND CAST-IN-PLACE DESIGNS ARE ACCEPTABLE, SUBJECT TO REVIEW AND APPROVAL.
2. ALL REINFORCED CONCRETE DESIGN SHALL BE TO WSDOT DESIGN MANUAL M 22-01. DESIGN SHALL BE H20 LOADING TO ASTM850
3. APPROXIMATE DEPTHS OF COVER OVER THE CENTERLINE OF THE BOX CULVERT ARE SHOWN ON THE PLAN PROFILES. THE CONTRACTOR SHALL COMPUTE MINIMUM DEPTHS OF COVER FOR DESIGN PURPOSES USING THE DETAILED GEOMETRIC INFORMATION PROVIDED ON THE ROADWAY PROFILE SHEETS AND THE TYPICAL SECTIONS.
4. PAYMENT SHALL BE BY LINEAL FOOT OF BOX CULVERT INSTALLED. ALL INVESTIGATION, DESIGN, CONCRETE, REINFORCING, BEDDING, BACKFILL, MANHOLES, BLOCKOUTS, BULKHEADS AND ALL OTHER ITEMS ARE INCIDENTAL TO THIS UNIT PRICE.

REINFORCED CONCRETE BOX CULVERT (DESIGN-BUILD)
N.T.S.

DESIGNED JM
DRAWN BK
CRP 301422
HOR. NA
VERT. NA
DATE 6/24/03
DWG: DD6
SHEET OF

CALL 48 HOURS BEFORE YOU DIG
1-800-553-4344
"It's the Law"
NORTHWEST UTILITIES NOTIFICATION CENTER

JOHN MILNE
STATE OF WASHINGTON
31148
REGISTERED PROFESSIONAL ENGINEER
EXPIRES JULY 7, 2003

DESIGN & ENGINEERING DIVISION
DESIGN SECTION

ST JOHNS RD (NE 50TH TO NE 72ND)
DRAINAGE DETAILS VI

proud past, promising future
CLARK COUNTY
WASHINGTON

N:\CIP\PROJECTS\301422-STJohns-50thTo72nd\DESIGN\DWGS\DD6.dwg, Layout1, 3/18/2004 4:42:16 PM, begleyk

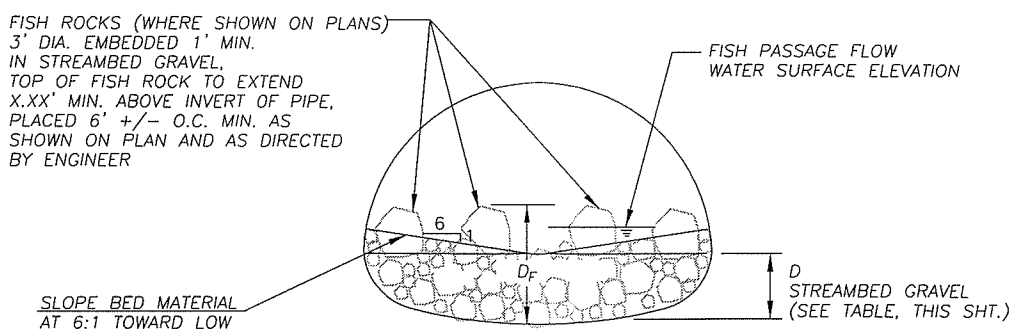

NOTES:
1. FILL CULVERT WITH STREAMBED GRAVEL TO DIMENSIONS SHOWN

CULVERT CROSS SECTION

N.T.S.

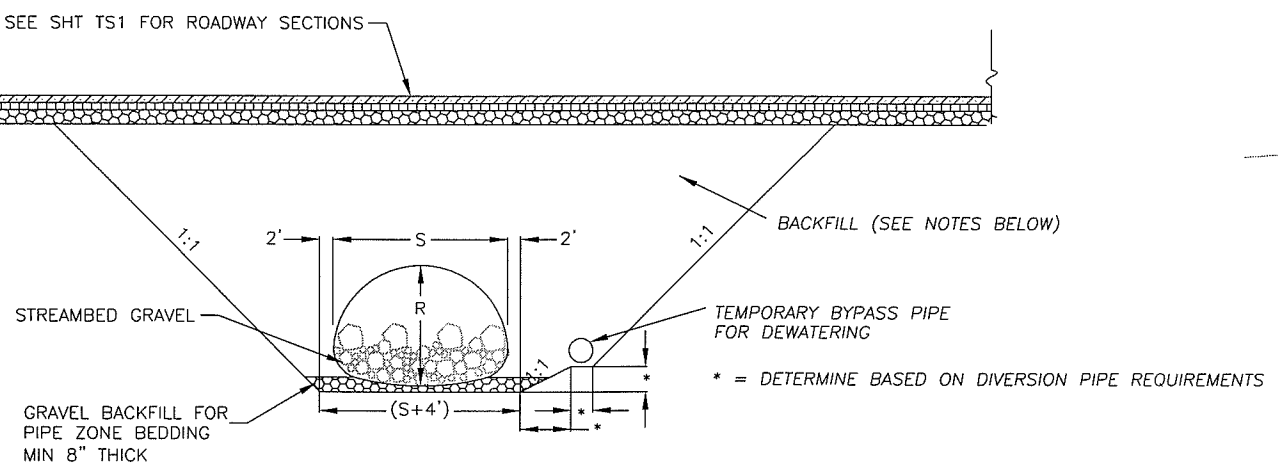

CULVERT TRENCH DETAIL

N.T.S.

NOTES:
1. FOR STRUCTURAL PLATE PIPE ARCH, BACKFILL TO BE IMPORTED, CLEAN, WELL- GRADED GRANULAR MATERIAL (AASHTO M 145 FOR SOIL CLASSIFICATION A-1, A-2 OR A-3)
2. PIPE INSTALLATION PER MANUFACTURER'S SPECIFICATIONS. CONTACT PIPE MANUFACTURER TO PROVIDE ON-SITE ASSISTANCE PRIOR TO ASSEMBLY.
3. BACKFILL SHALL BE PLACED SYMMETRICALLY ON EACH SIDE OF THE STRUCTURE IN 6" TO 8" LIFTS.
4. PLACEMENT, BACKFILL AND COMPACTION TO BE AS DIRECTED BY ENGINEER.
5. ALL PAVING INCLUDED IN PAVEMENT BID ITEMS
6. ALL BEDDING, BACKFILL AND INSTALLATION INCLUDED IN BID ITEM FOR PIPE. FILL INSIDE PIPE PAID UNDER SEPARATE BID ITEMS.

CULVERT LOCATION	STRUCTURE TYPE	S	R	D	D_F
LALONDE CREEK	BOX CULVERT	6'-0"	6'-0"	2.0'	N.A.
CURTIN CREEK	STRUCTURAL PLATE PIPE ARCH	6'-1"	4'-7"	2.29'	N.A.

CULVERT DIMENSIONS

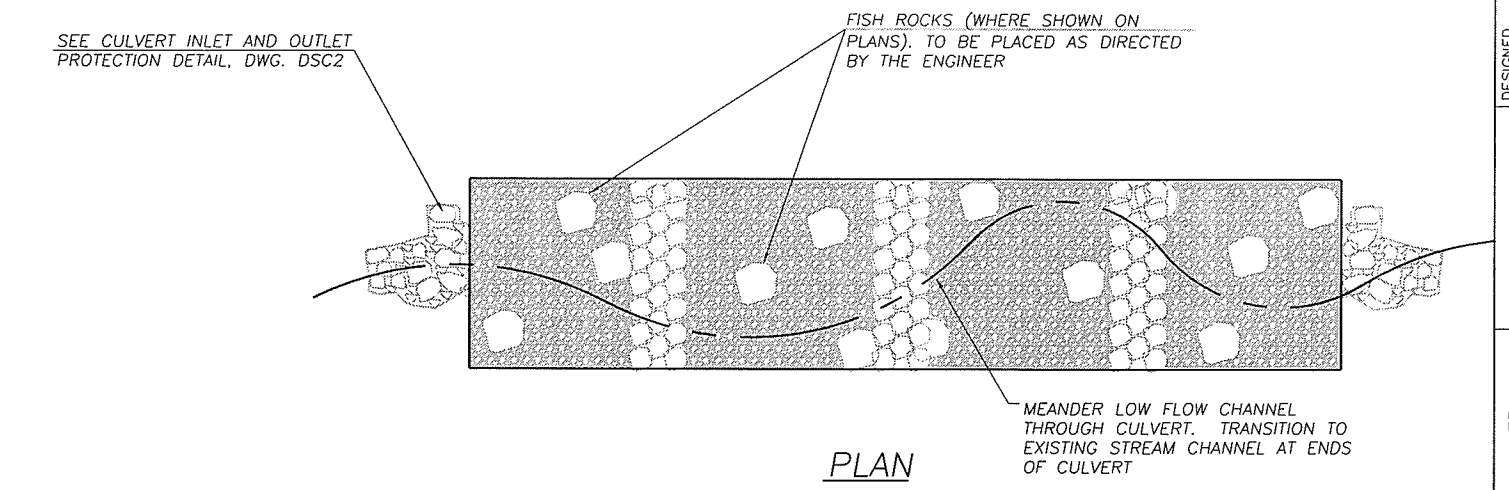

PLAN

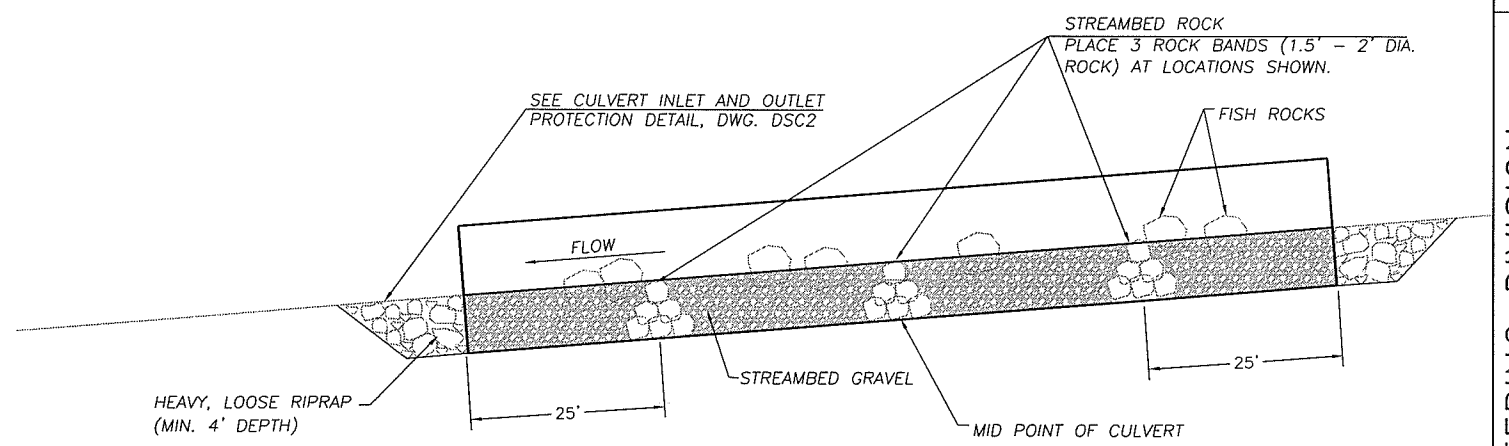

PROFILE

TYPICAL CULVERT LAYOUT

N.T.S.

LALONDE CREEK	
Diameter (in)	Percent Finer
10	100
5	85-95
2	65-75
1/4	30-40
0.03	10-15

1. STREAMBED GRAVEL TO BE WELL-GRADED GRAVEL PIT MATERIAL. QUARRIED, ANGULAR MATERIAL IS NOT ACCEPTABLE.
2. STREAMBED GRAVEL TO BE TESTED AND GRADATION CONFIRMED AT GRAVEL PIT PRIOR TO DELIVERY TO SITE.

GRADATION FOR STREAMBED GRAVEL

PRELIMINARY

DESIGNED	JM
DRAWN	BK
CRP	301422
HOR.	NA
VERT.	NA
DATE	6/24/03
DWG:	DSC1
SHEET	OF

CALL 48 HOURS BEFORE YOU DIG 1-800-553-4344 "It's the Law" NORTHWEST UTILITIES NOTIFICATION CENTER

STATE OF WASHINGTON MILLER 31148 PROFESSIONAL ENGINEER EXPIRES: JULY 7, 2003

DESIGN & ENGINEERING DIVISION
DESIGN SECTION

ST JOHNS RD (NE 50TH TO NE 72ND)
STREAM CROSSING DETAILS I

proud past, promising future
CLARK COUNTY WASHINGTON

N:\CIP\PROJECTS\301422-STJohns-50thTo72nd\DESIGN\DWGS\DSC1.dwg, Layout1, 3/18/2004 4:42:52 PM, begleyk

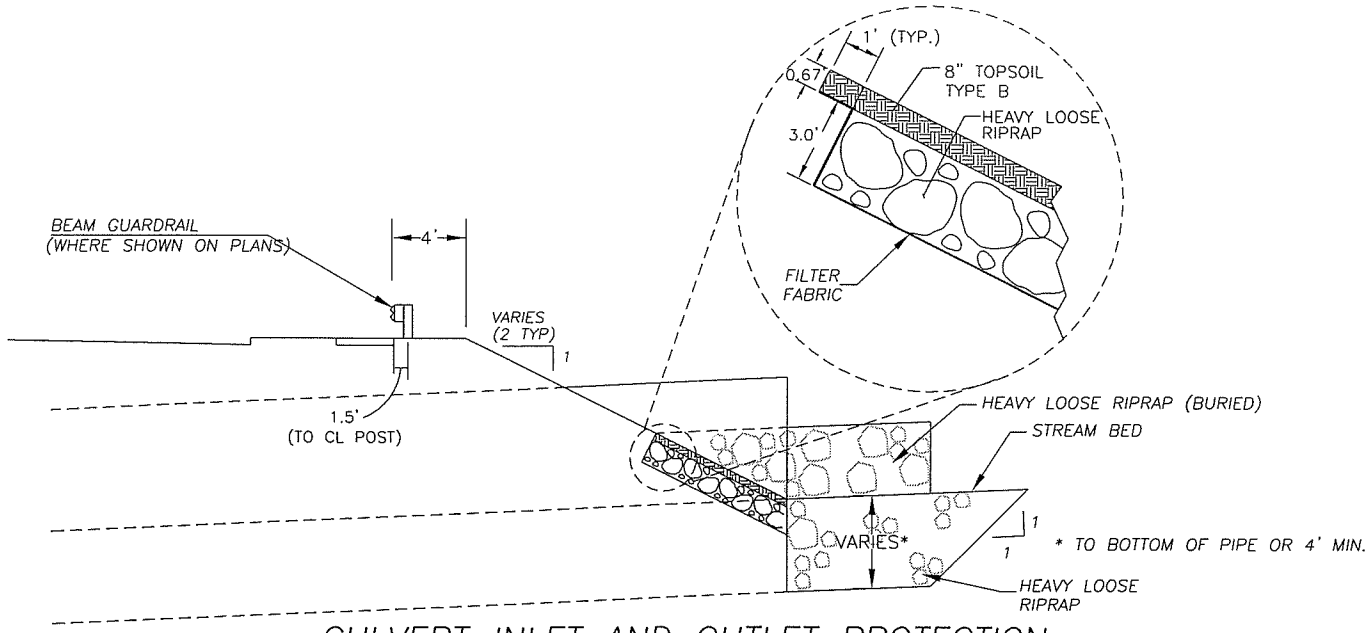

CULVERT INLET AND OUTLET PROTECTION

N.T.S.

NOTES:
1. SEE PLAN AND PROFILE SHEETS FOR DETAILED LAYOUT AND ELEVATION INFORMATION.
2. FILTER FABRIC SHALL BE CONSTRUCTION GEOTEXTILE FOR SEPARATION OR SOIL STABILIZATION TO WDOT 9-33 (TABLE-3). INSTALL LINER PER MANUFACTURER'S SPECIFICATIONS.
3. ALL COSTS FOR 8" TOPSOIL TYPE B INCLUDED IN UNIT COST FOR HEAVY LOOSE RIPRAP (BURIED).
4. FOR BEAM GUARDRAIL, SEE WSDOT STD. PLAN C-1.
5. WHERE DRIVEN BEAM MAY IMPACT CULVERT, PROVIDE 12'-6" SPAN PLACEMENT PER WDOT STD PLAN C-2K.

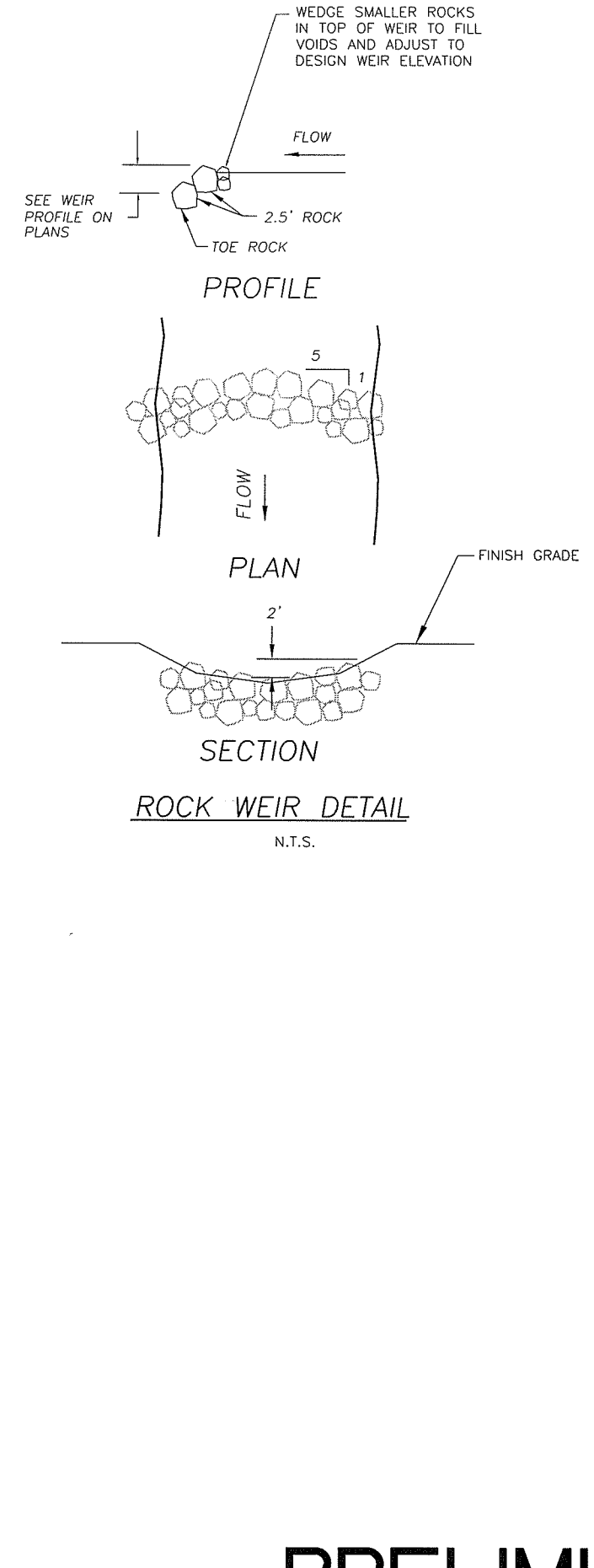

ROCK WEIR DETAIL

N.T.S.

PRELIMINARY

DESIGNED JM
DRAWN BK
CRP 301422
HOR. NA
VERT. NA
DATE 6/24/03
DWG: DSC2
SHEET OF

CALL 48 HOURS BEFORE YOU DIG
1-800-553-4344
"It's the Law"
NORTHWEST UTILITIES NOTIFICATION CENTER

JOHN MILNE
STATE OF WASHINGTON
31148
REGISTERED PROFESSIONAL ENGINEER
EXPIRES: JULY 7, 2003

DESIGN & ENGINEERING DIVISION
DESIGN SECTION

ST JOHNS RD (NE 50TH TO NE 72ND)
STREAM CROSSING DETAILS II

proud past, promising future
CLARK COUNTY WASHINGTON

N:\CIP\PROJECTS\301422-STJohns-50thTo72nd\DESIGN\DWGS\DSC2.dwg, Layout1, 3/18/2004 4:43:27 PM, begleyk

WALL R001

CONSTRUCT WITH STANDARD UNITS

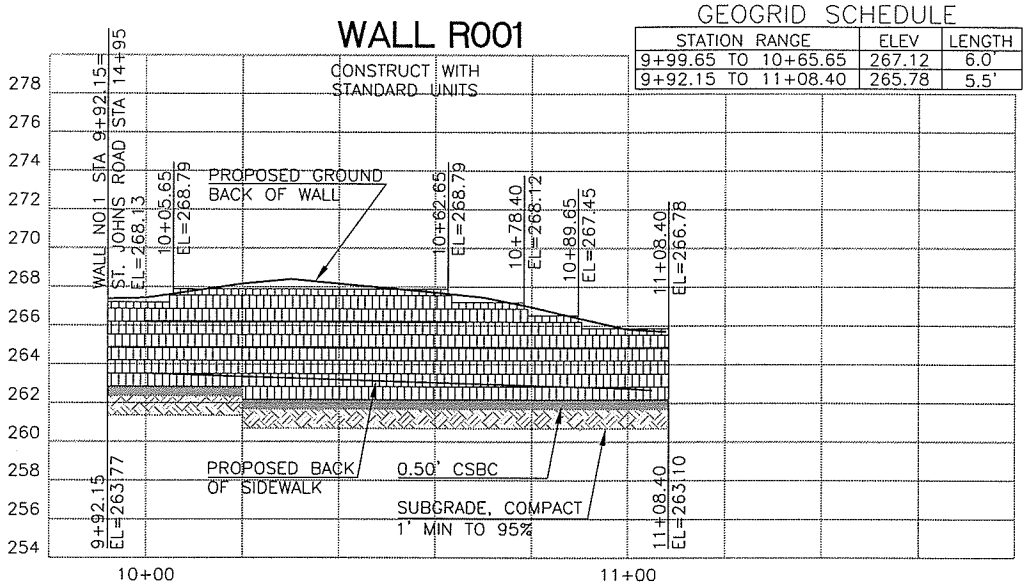

GEOGRID SCHEDULE

STATION RANGE	ELEV	LENGTH
9+99.65 TO 10+65.65	267.12	6.0'
9+92.15 TO 11+08.40	265.78	5.5'

WALL R002

CONSTRUCT WITH STANDARD UNITS

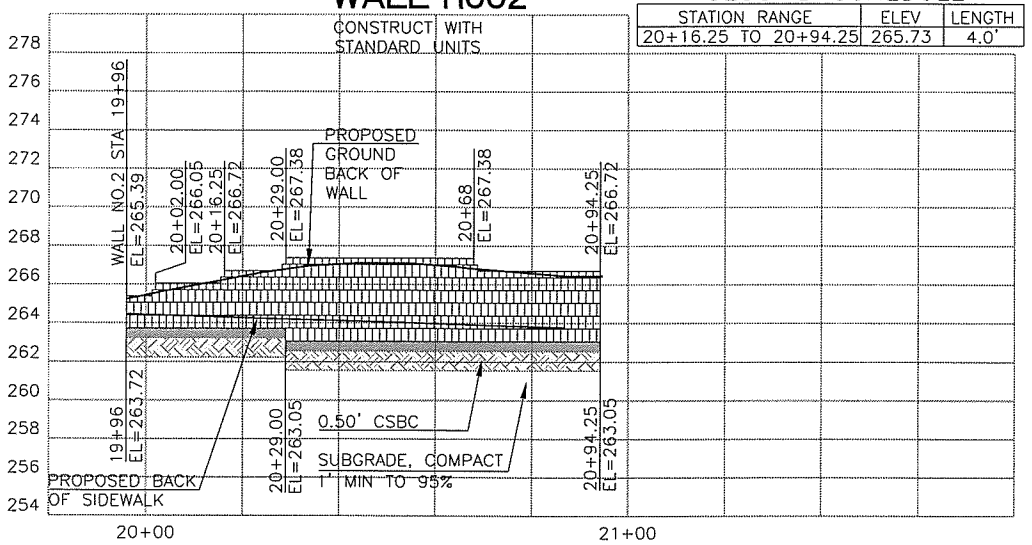

GEOGRID SCHEDULE

STATION RANGE	ELEV	LENGTH
20+16.25 TO 20+94.25	265.73	4.0'

WALL R003

CONSTRUCT WITH STANDARD UNITS

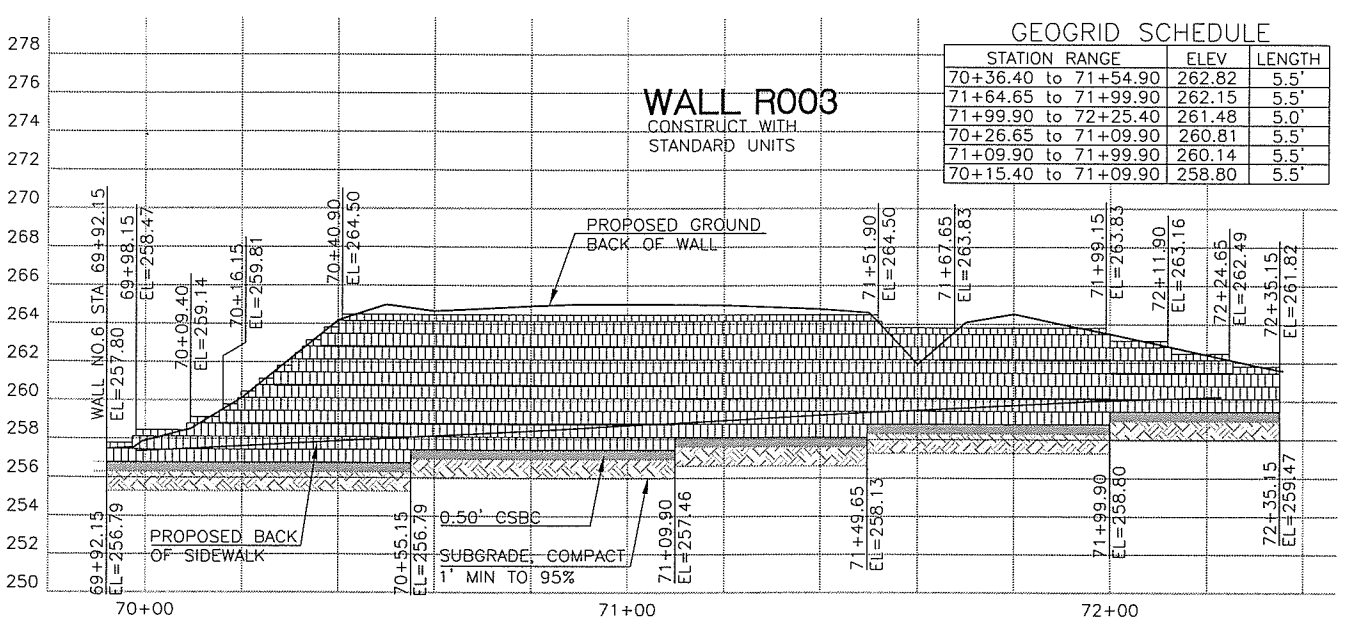

GEOGRID SCHEDULE

STATION RANGE	ELEV	LENGTH
70+36.40 to 71+54.90	262.82	5.5'
71+64.65 to 71+99.90	262.15	5.5'
71+99.90 to 72+25.40	261.48	5.0'
70+26.65 to 71+09.90	260.81	5.5'
71+09.90 to 71+99.90	260.14	5.5'
70+15.40 to 71+09.90	258.80	5.5'

WALL R004

CONSTRUCT WITH STANDARD UNITS

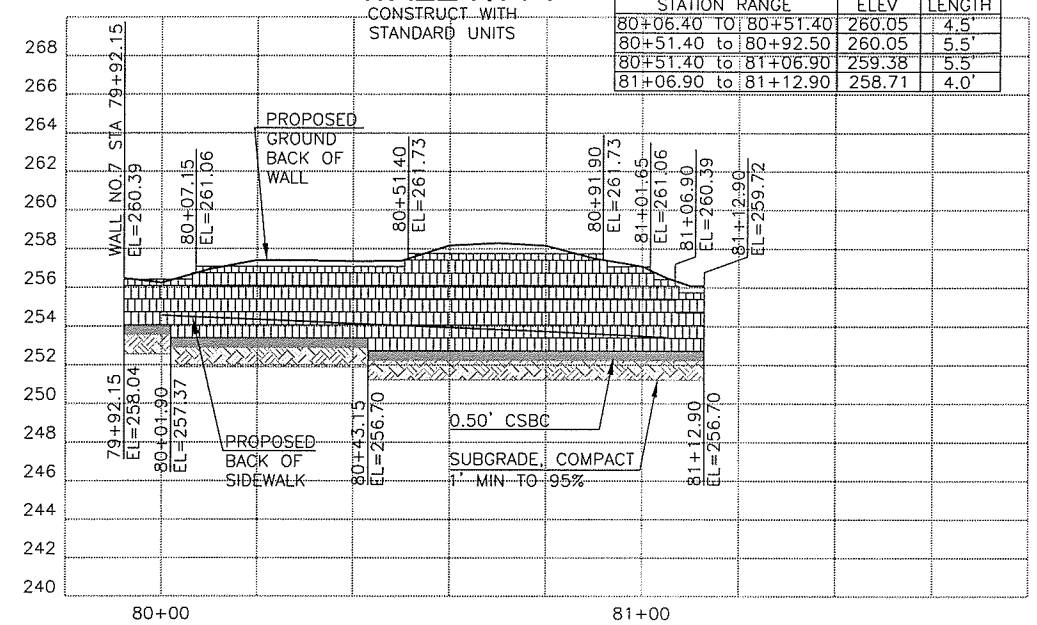

GEOGRID SCHEDULE

STATION RANGE	ELEV	LENGTH
80+06.40 TO 80+51.40	260.05	4.5'
80+51.40 to 80+92.50	260.05	5.5'
80+51.40 to 81+06.90	259.38	5.5'
81+06.90 to 81+12.90	258.71	4.0'

WALL R005

CONSTRUCT WITH COMPACT UNITS

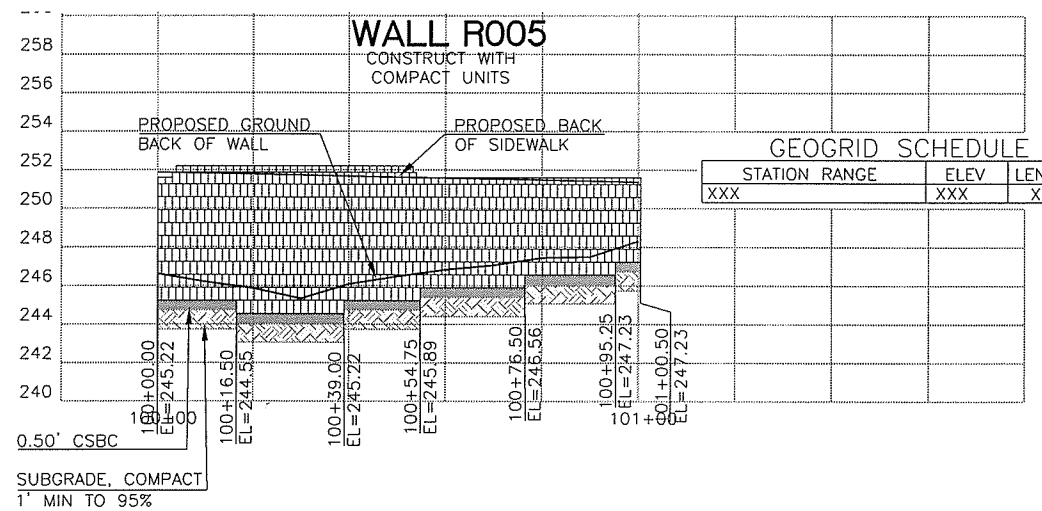

GEOGRID SCHEDULE

STATION RANGE	ELEV	LENGTH
XXX	XXX	XXX

WALL R006

CONSTRUCT WITH COMPACT UNITS

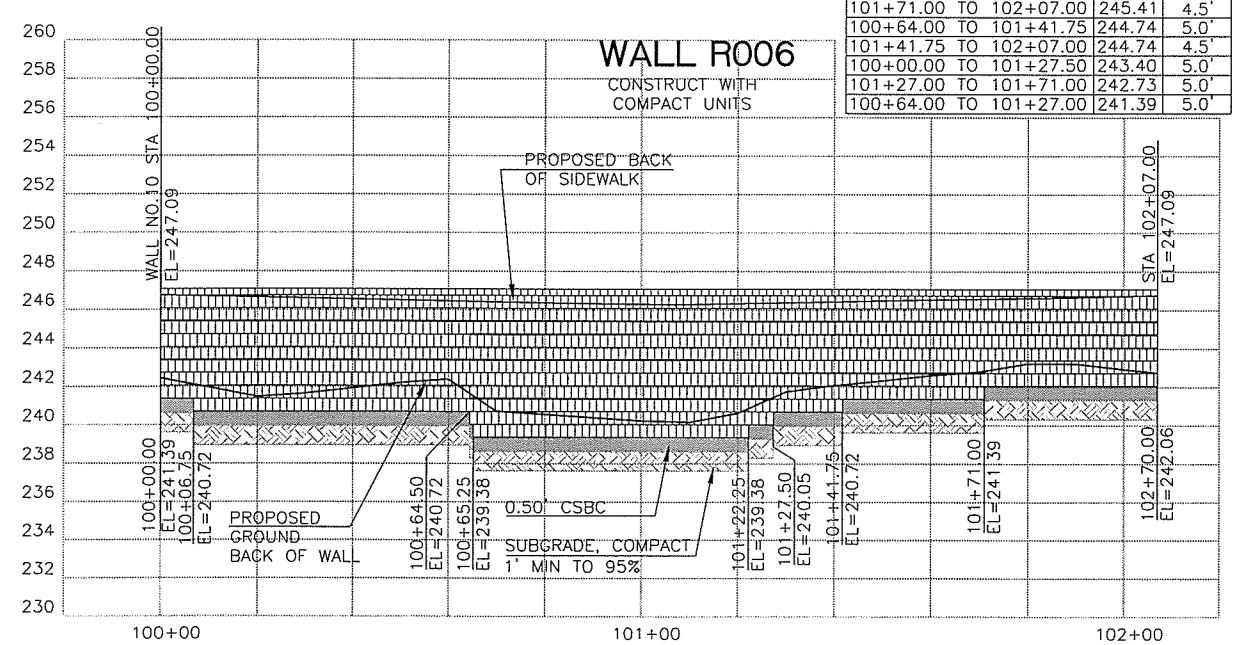

GEOGRID SCHEDULE

STATION RANGE	ELEV	LENGTH
100+00.00 TO 101+71.00	245.41	5.0'
101+71.00 TO 102+07.00	245.41	4.5'
100+64.00 TO 101+41.75	244.74	5.0'
101+41.75 TO 102+07.00	244.74	4.5'
100+00.00 TO 101+27.50	243.40	5.0'
101+27.00 TO 101+71.00	242.73	5.0'
100+64.00 TO 101+27.00	241.39	5.0'

DESIGNED	MME
DRAWN	BAK
CRP	301422
HOR.	1"=20'
VERT.	1"=5'
DATE	3/18/02
DWG:	W01
SHEET	OF

CALL 48 HOURS BEFORE YOU DIG 1-800-553-4344 "It's the Law" NORTHWEST UTILITIES NOTIFICATION CENTER

MICHAEL W. KIRKBRICK STATE OF WASHINGTON 29030 REGISTERED PROFESSIONAL ENGINEER

EXPIRES: MAY 26, 2003

DESIGN & ENGINEERING DIVISION
DESIGN SECTIONS

ST. JOHNS RD (NE 50TH TO NE 72ND)
RETAINING WALLS

proud past, promising future

CLARK COUNTY WASHINGTON

N:\CIP\PROJECTS\301422-STJohns-50thToNE72nd\DESIGN\DWGS\W01.dwg, Layout1, 3/23/2004 6:35:09 PM, begleyk

BASE LEVELING PAD NOTES:

1. THE LEVELING PAD IS TO BE CONSTRUCTED OF CRUSHED STONE OR 2,000 PSI± UNREINFORCED CONCRETE.
2. THE BASE FOUNDATION IS TO BE APPROVED BY THE SITE GEOTECHNICAL ENGINEER PRIOR TO PLACEMENT OF THE LEVELING PAD.

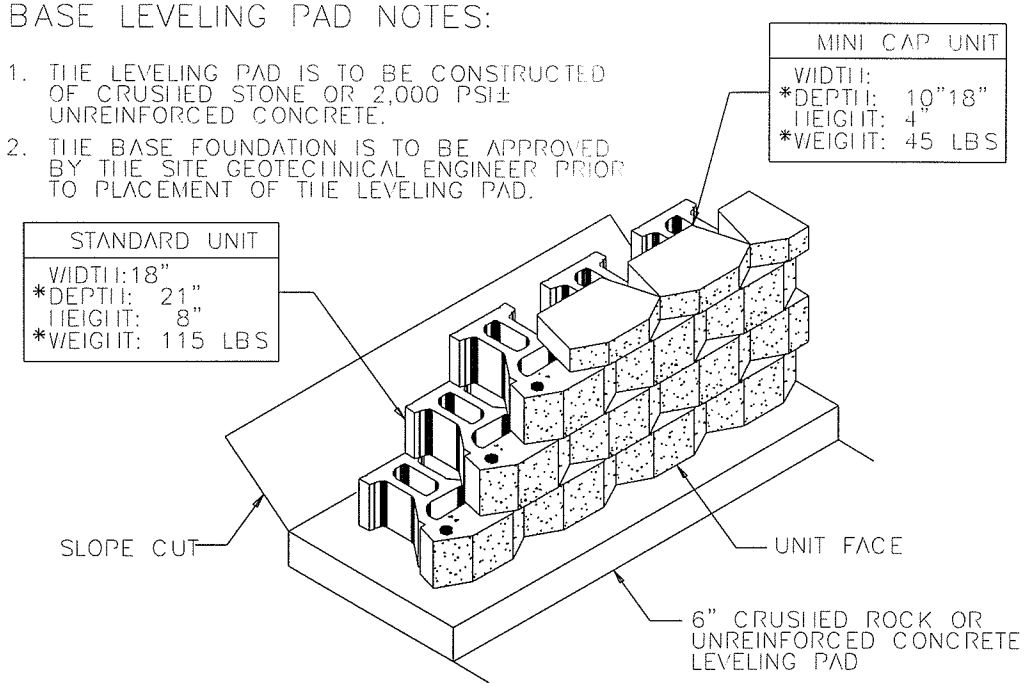

1/3 STANDARD UNIT/BASE PAD ISOMETRIC VIEW
SCALE: 3/8" = 1'-0"

*DIMENSIONS & WEIGHT MAY VARY BY REGION

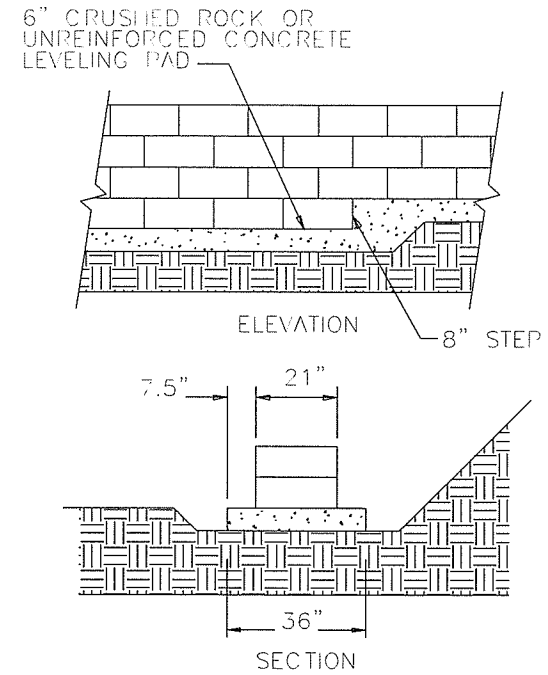

2/3 LEVELING PAD DETAIL
SCALE: 1/4" = 1'-0"

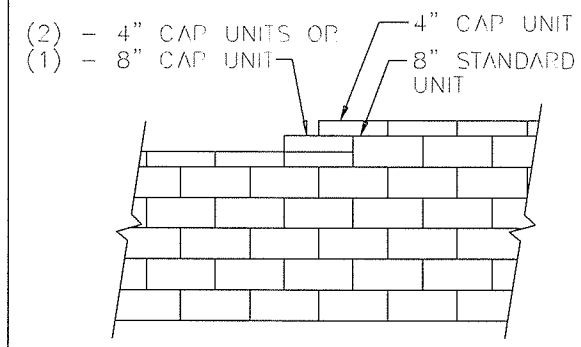

3/3 TOP OF WALL STEPS
SCALE: 1/4" = 1'-0"

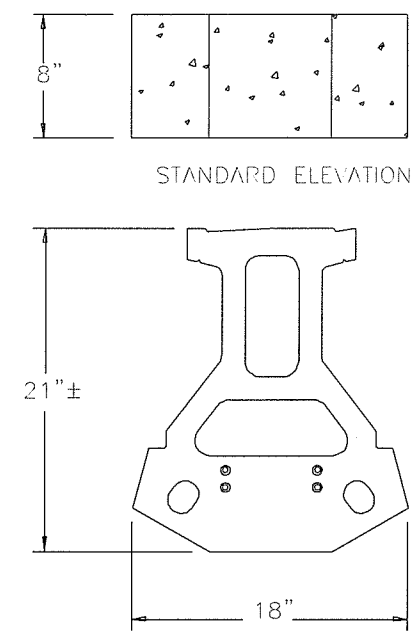

4/3 STANDARD UNIT
SCALE: 1" = 1'-0"

NOTE:

1. CHECK WITH MANUFACTURER SPECIFICATIONS ON CORRECT DIRECTION OF ORIENTATION FOR GEOGRID TO OBTAIN PROPER STRENGTH.

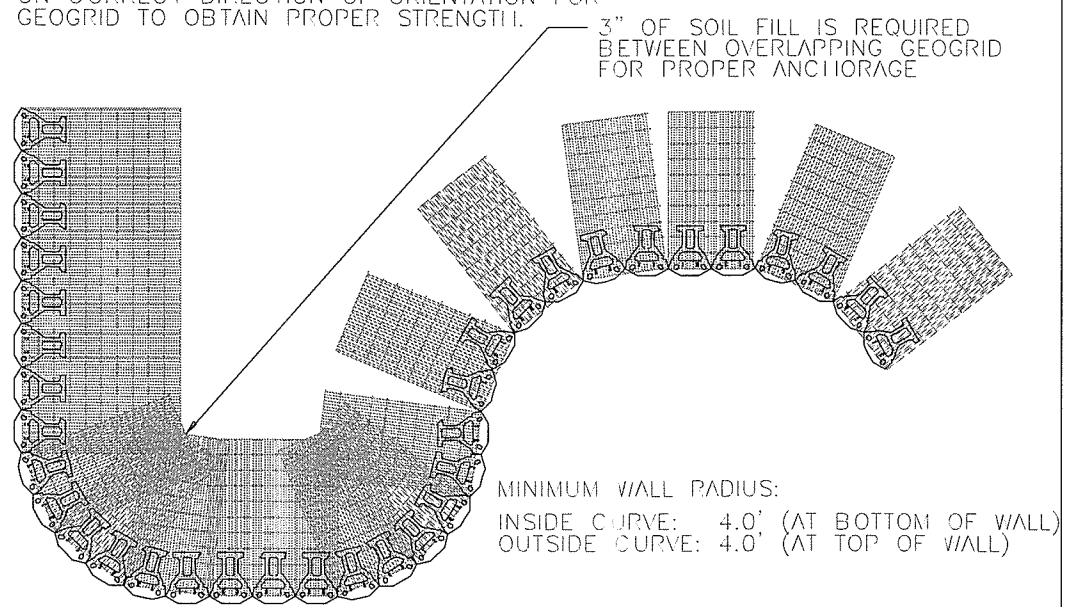

5/3 GEOGRID INSTALLATION ON CURVES
SCALE: 5/32" = 1'-0"

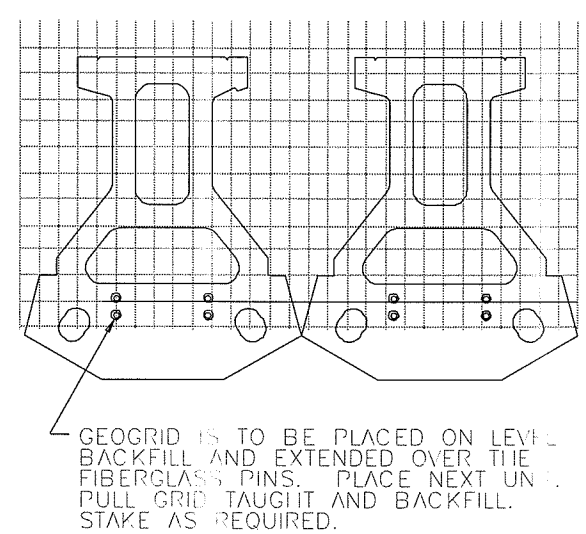

6/3 GRID & PIN CONNECTION
SCALE: 1" = 1'-0"

NOTE:

1. COLLAR MAY BE CAST AROUND PIPE FOR EASE OF CONSTRUCTION AND APPEARANCE.

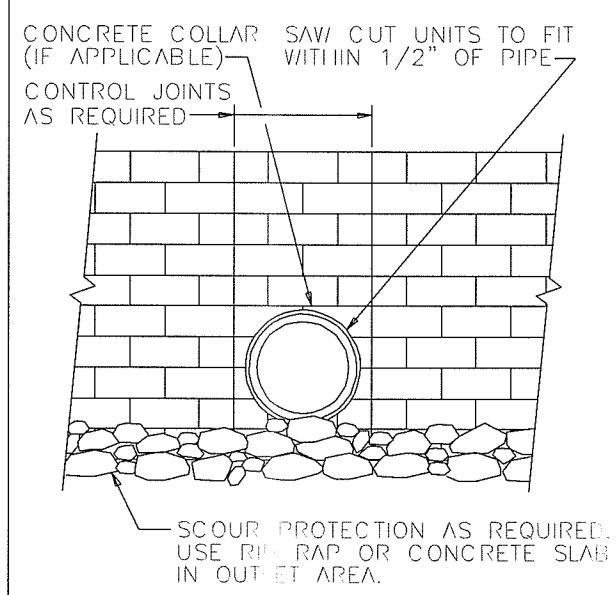

7/3 TYPICAL PIPE OUTLET DETAIL
SCALE: 1/4" = 1'-0"

DESIGNED	MME
DRAWN	BAK
CRP	301422
HOR.	NA
VERT.	NA
DATE	3/18/02
DWG:	W02
SHEET	OF

CALL 48 HOURS BEFORE YOU DIG 1-800-553-4344 "It's the Law" NORTHWEST UTILITIES NOTIFICATION CENTER

MICHAEL M. EBRICK STATE OF WASHINGTON 29039 PROFESSIONAL ENGINEER EXPIRES MAY 26, 2003

DESIGN & ENGINEERING DIVISION
DESIGN SECTION

ST. JOHNS RD (NE 50TH TO NE 72ND)
RETAINING WALL DETAILS

proud past. promising future
CLARK COUNTY WASHINGTON

N:\CIP\PROJECTS\301422-STJohns-50thTo72nd\DESIGN\DWGS\W02-4.dwg, Layout1, 3/18/2004 4:45:37 PM, begleyk

BASE LEVELING PAD NOTES:

1. THE LEVELING PAD IS TO BE CONSTRUCTED OF CRUSHED STONE OR 2,000 PSI± UNREINFORCED CONCRETE.
2. THE BASE FOUNDATION IS TO BE APPROVED BY THE SITE GEOTECHNICAL ENGINEER PRIOR TO PLACEMENT OF THE LEVELING PAD.

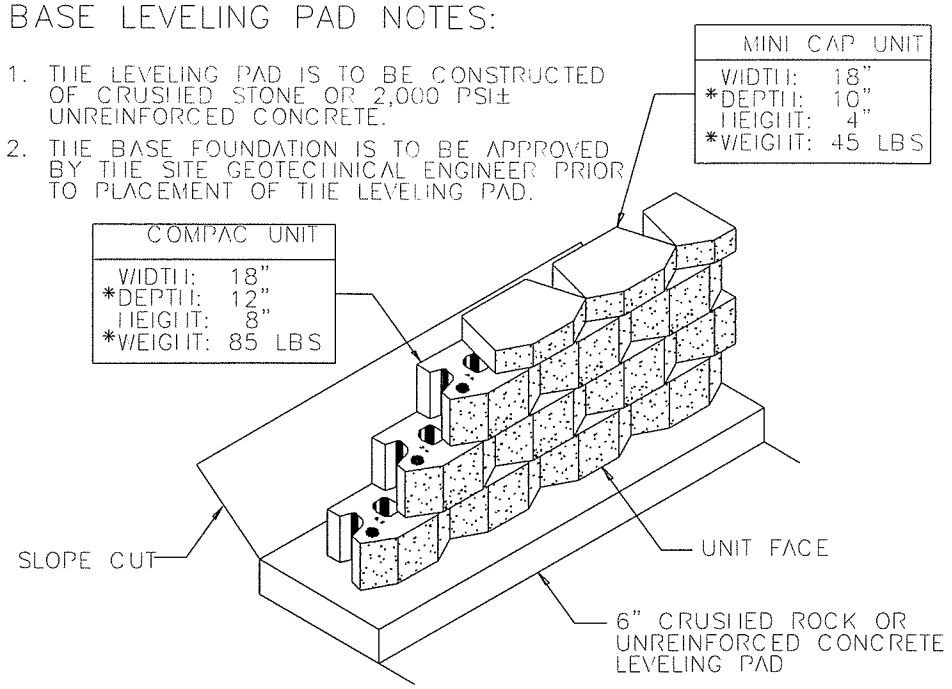

1/5 COMPAC UNIT/BASE PAD ISOMETRIC VIEW
SCALE: 3/8" = 1'-0"

*DIMENSIONS & WEIGHT MAY VARY BY REGION

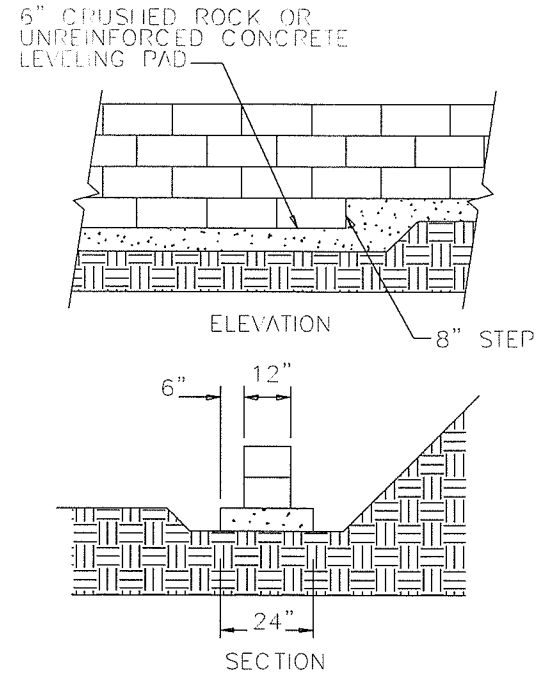

2/5 LEVELING PAD DETAIL
SCALE: 1/4" = 1'-0"

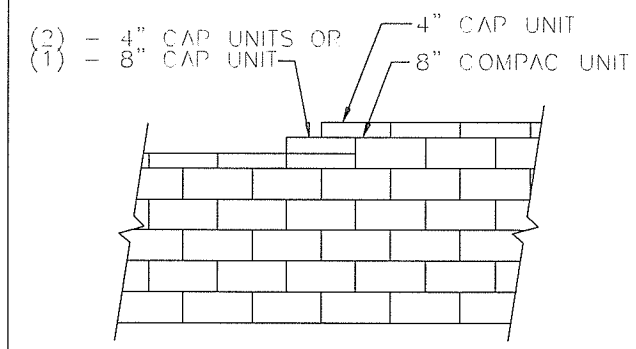

3/5 TOP OF WALL STEPS
SCALE: 1/4" = 1'-0"

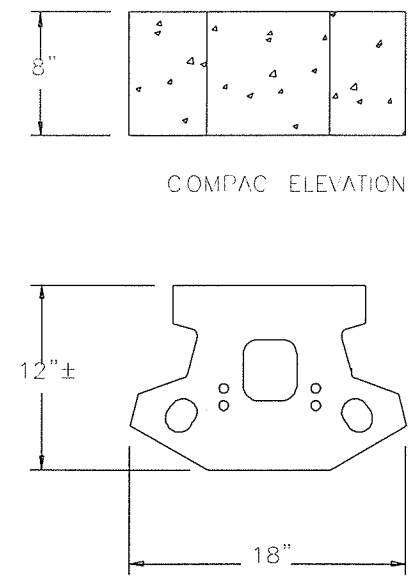

4/5 COMPAC UNIT
SCALE: 1" = 1'-0"

NOTE:

1. CHECK WITH MANUFACTURER SPECIFICATIONS ON CORRECT DIRECTION OF ORIENTATION FOR GEOGRID TO OBTAIN PROPER STRENGTH.

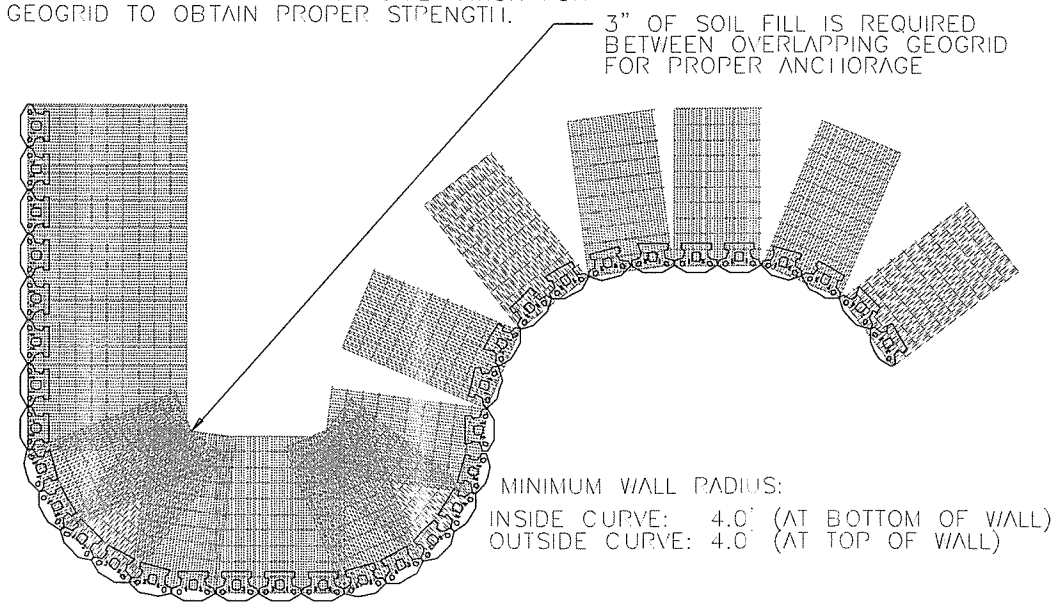

5/5 GEOGRID INSTALLATION ON CURVES
SCALE: 5/32" = 1'-0"

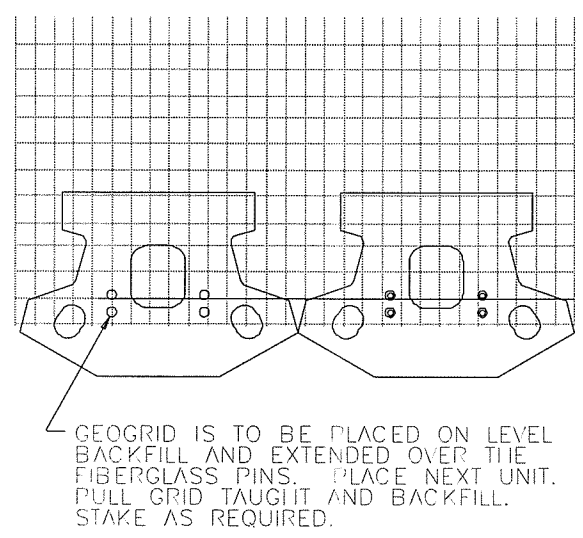

6/5 GRID & PIN CONNECTION
SCALE: 1" = 1'-0"

NOTE:

FOR PIPES LARGER THAN 24", A CONCRETE COLLAR MAY BE CAST AROUND PIPE FOR EASE OF CONSTRUCTION AND APPEARANCE.

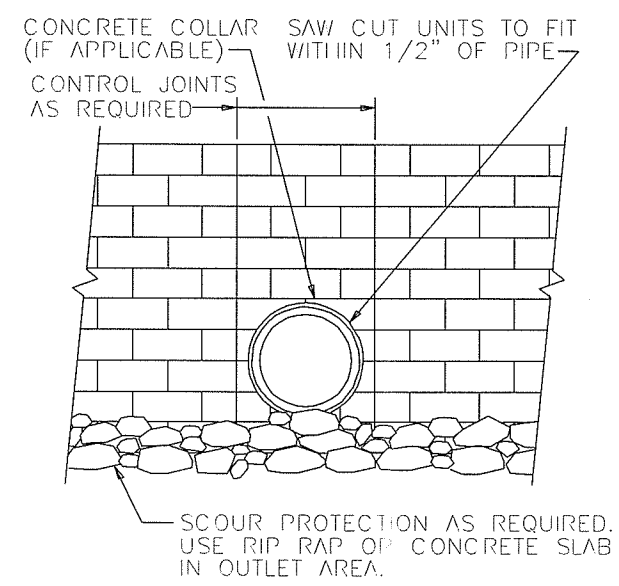

7/5 TYPICAL PIPE OUTLET DETAIL
SCALE: 1/4" = 1'-0"

DESIGNED	MME
DRAWN	BAK
CRP	301422
HOR.	NA
VERT.	NA
DATE	3/18/02
DWG:	W03
SHEET	OF

CALL 48 HOURS BEFORE YOU DIG 1-800-553-4344 "It's the Law" NORTHWEST UTILITIES NOTIFICATION CENTER

MICHAEL M. BERRICK STATE OF WASHINGTON 29030 REGISTERED PROFESSIONAL ENGINEER
EXPIRES: MAY 26, 2003

DESIGN & ENGINEERING DIVISION
DESIGN SECTION

ST. JOHNS RD (NE 50TH TO NE 72ND)
RETAINING WALL DETAILS

proud past, promising future
CLARK COUNTY WASHINGTON

N:\CIP\PROJECTS\301422-STJohns-50thTo72nd\DESIGN\DWGS\W02-4.dwg, Layout1 (2), 3/18/2004 4:46:02 PM, begleyk

N:\CIP\PROJECTS\301422-STJohns-50thTo72nd\DESIGN\DWGS\W02-4.dwg, Layout1 (3), 3/18/2004 4:46:27 PM, beglevk

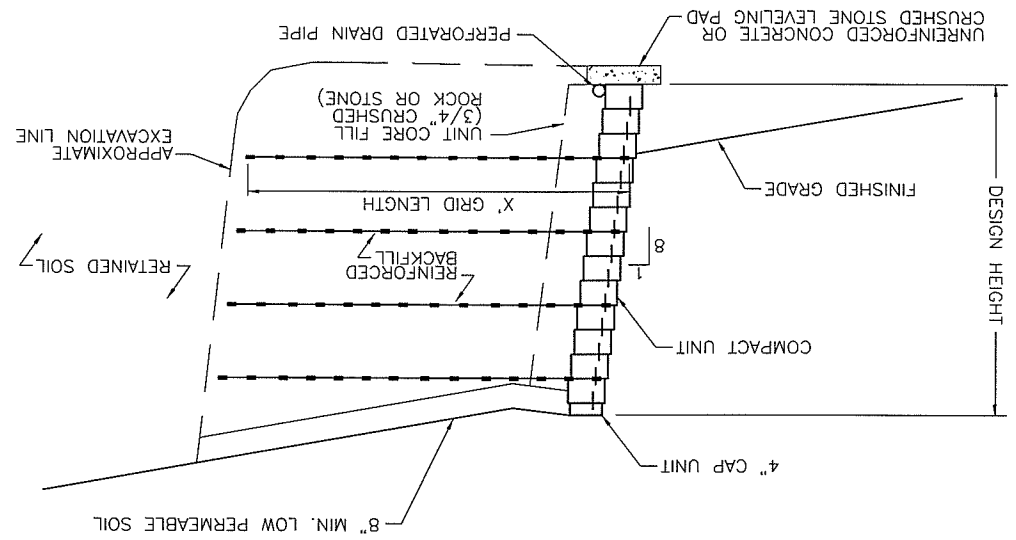

TYPICAL REINFORCED SECTION
COMPAC UNIT – 1" MINIMUM SETBACK

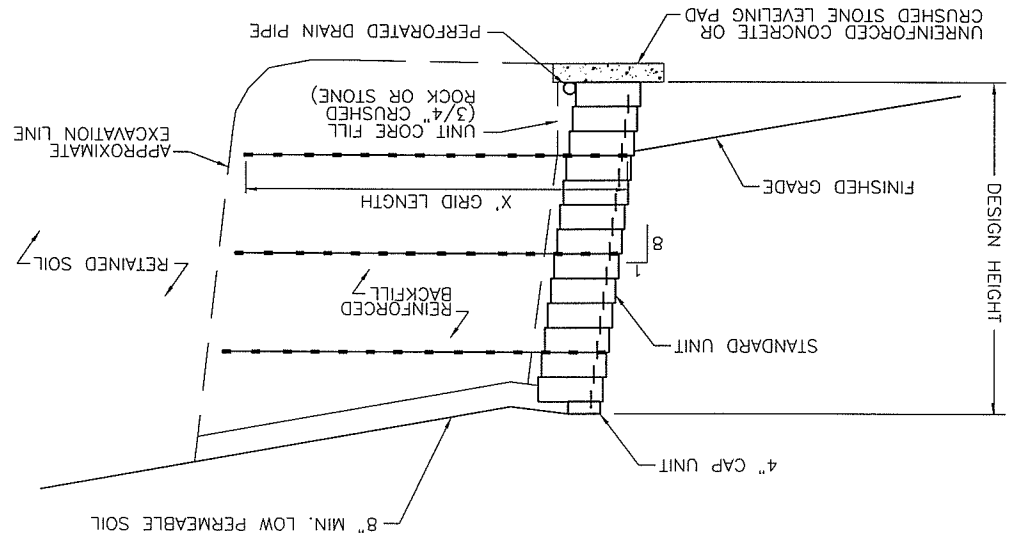

TYPICAL REINFORCED SECTION
STANDARD UNIT – 1" MINIMUM SETBACK

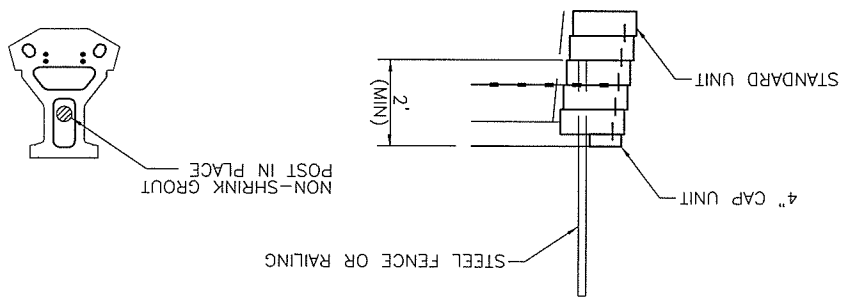

FENCE SECTION & PLAN DETAIL
STANDARD UNIT – 1" MINIMUM SETBACK

CLARK COUNTY
WASHINGTON

proud past, promising future

DESIGN & ENGINEERING DIVISION
DESIGN SECTION

ST. JOHNS RD (NE 50TH TO NE 72ND)
RETAINING WALL DETAILS

MICHAEL M. GARNER
STATE OF WASHINGTON
PROFESSIONAL ENGINEER
EXPIRES MAY 26, 2003

CALL 48 HOURS BEFORE YOU DIG
1-800-553-4344
"It's the Law"
NORTHWEST UTILITIES NOTIFICATION CENTER

DESIGNED	MME
DRAWN	BAK
CRP	301422
HOR.	NA
VERT.	NA
DATE	3/18/02
DWG:	W04
SHEET	OF

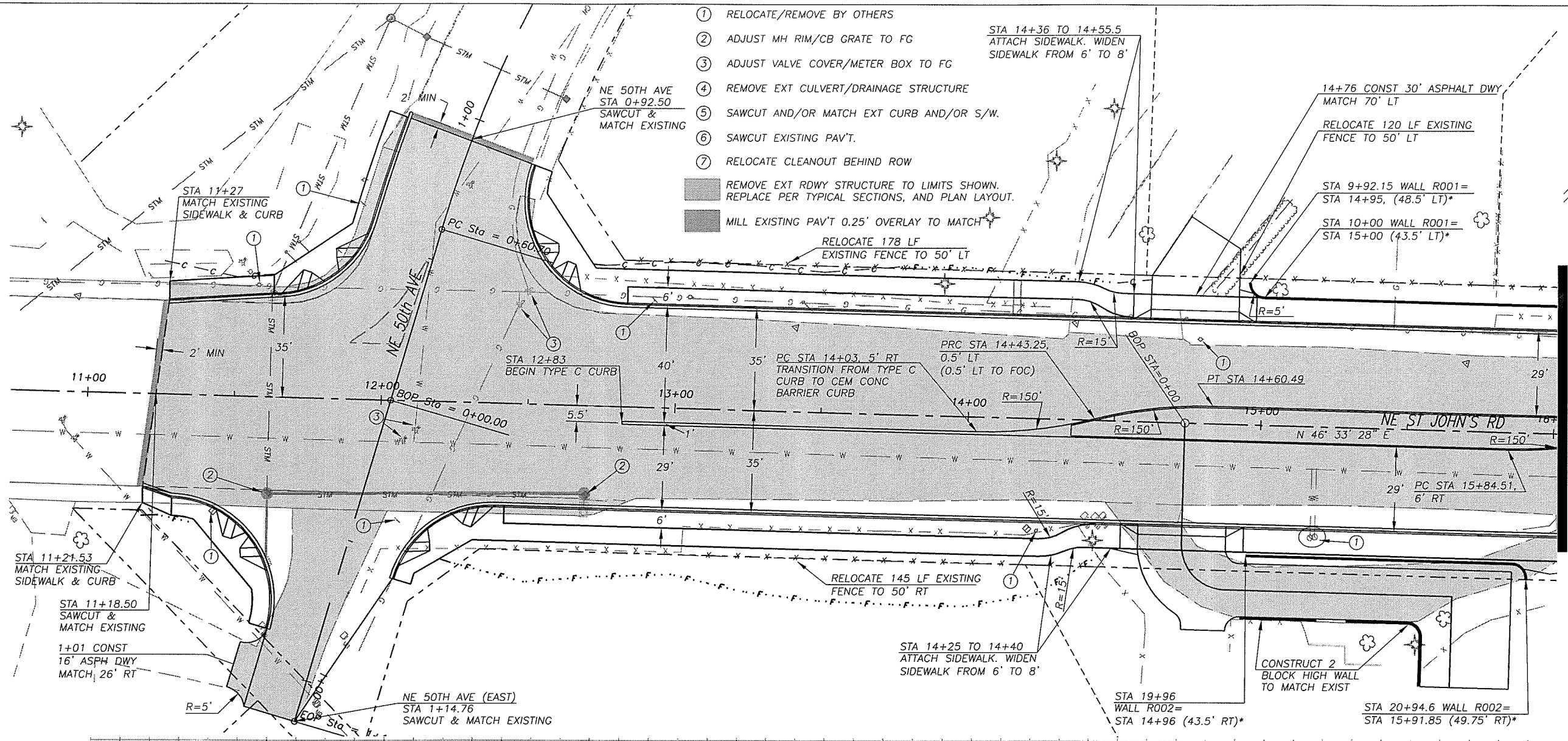

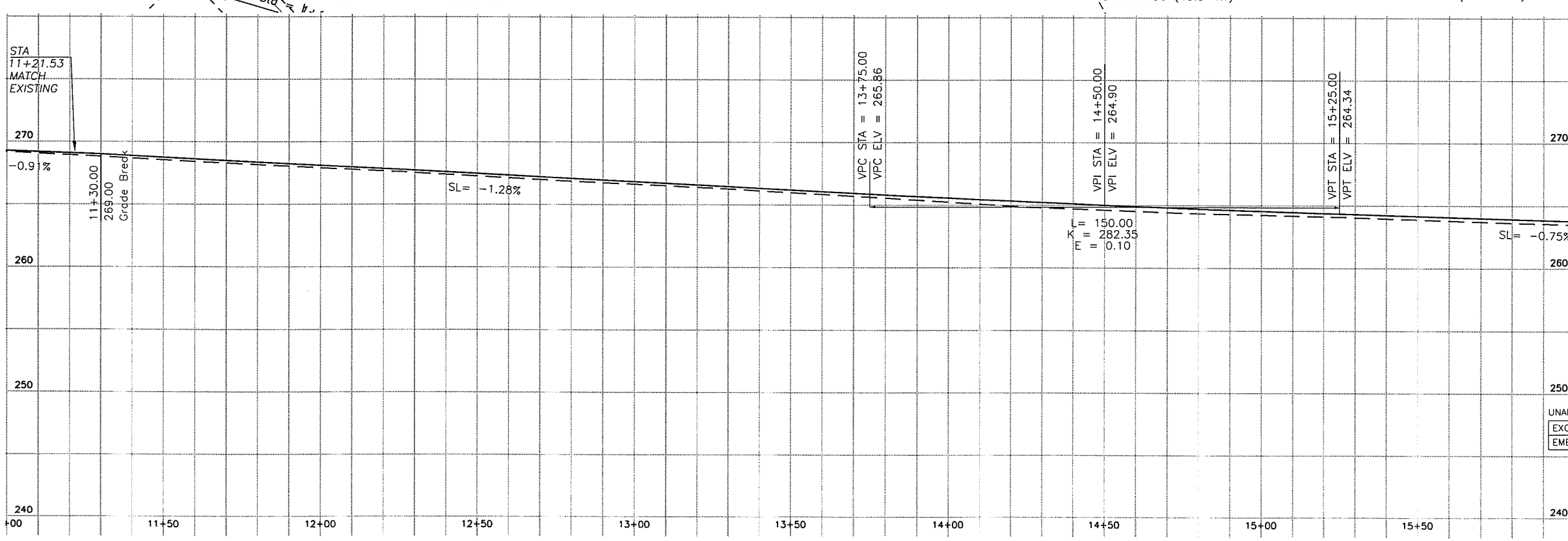

UNADJUSTED EARTHWORK QUANTITIES

EXCAVATION	2450
EMBANKMENT	370

DESIGNED	MME
DRAWN	BAK
CRP	301422
HOR.	1"=20'
VERT.	1"=5'
DATE	3/18/02
DWG:	PP01
SHEET	OF

CALL 48 HOURS BEFORE YOU DIG 1-800-553-4344 "It's the Law" NORTHWEST UTILITIES NOTIFICATION CENTER

STATE OF WASHINGTON MICHAEL M. BURDICK 25030 REGISTERED PROFESSIONAL ENGINEER EXPIRES: MAY 28, 2005

DESIGN & ENGINEERING DIVISION
DESIGN SECTION

ST. JOHNS RD (NE 50TH TO NE 72ND)
PLAN & PROFILE (B.O.P. TO STA 16+00)

proud past, promising future
CLARK COUNTY WASHINGTON

N:\CIP\PROJECTS\301422-STJohns-50thTo72nd\DESIGN\DWGS\PP01.dwg, Layout1, 3/18/2004 4:49:42 PM, begleyk

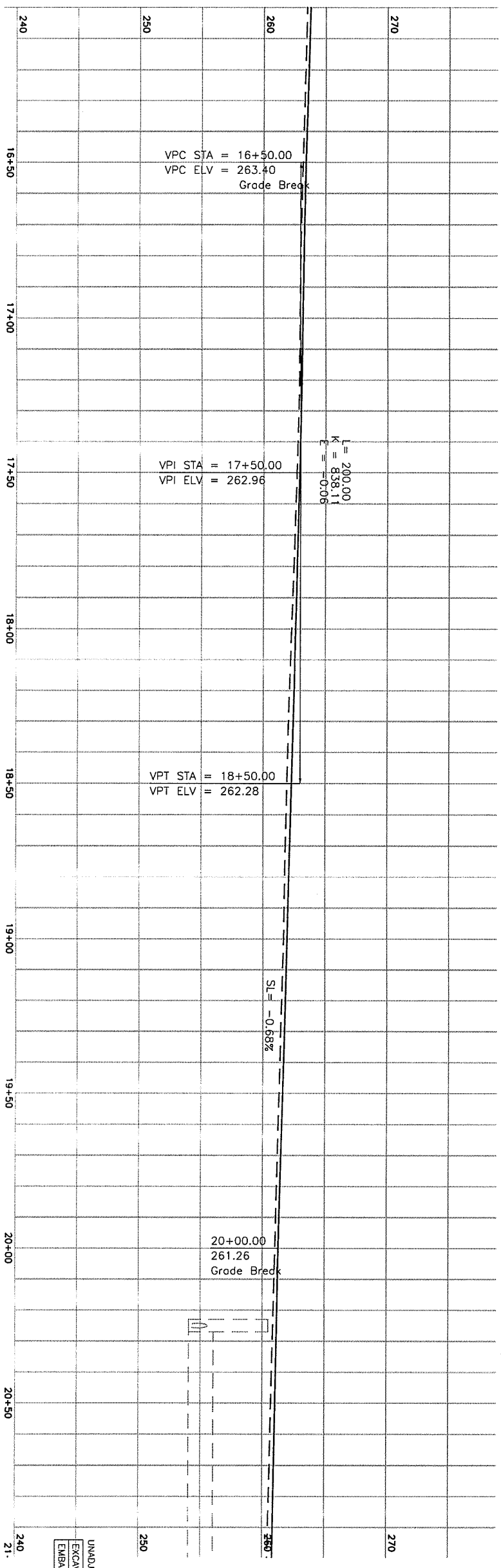

UNADJUSTED EARTHWORK QUANTITIES

EXCAVATION	1600
EMBANKMENT	900

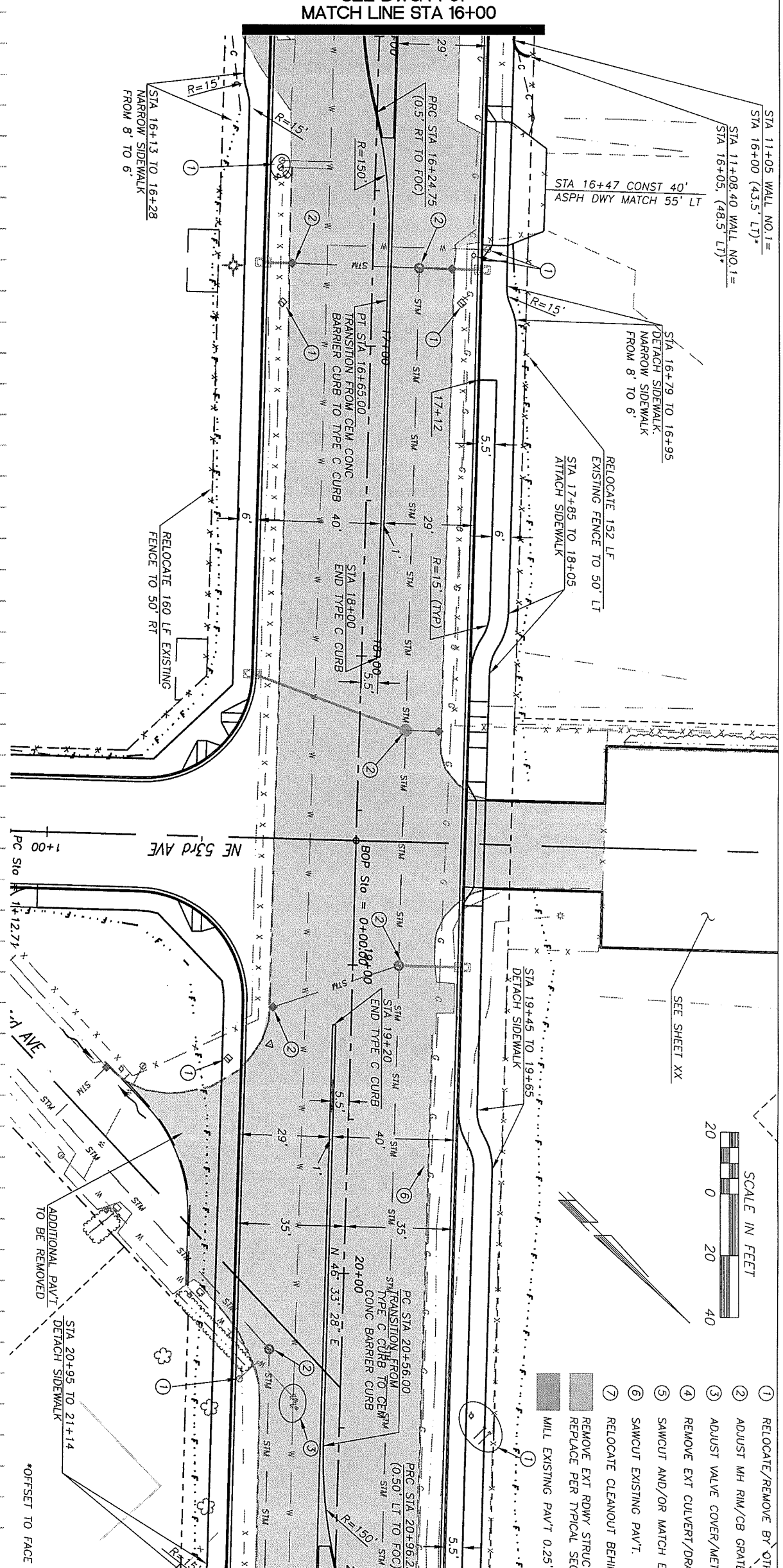

*OFFSET TO FACE OF WALL

1. RELOCATE/REMOVE BY OTHERS
2. ADJUST MH RIM/CB GRATE TO FG
3. ADJUST VALVE COVER/METER BOX TO FG
4. REMOVE EXT CULVERT/DRAINAGE STRUCTURE
5. SAWCUT AND/OR MATCH EXT CURB AND/OR S/W.
6. SAWCUT EXISTING PAV'T.
7. RELOCATE CLEANOUT BEHIND ROW

REMOVE EXT RDWY STRUCTURE TO LIMITS SHOWN. REPLACE PER TYPICAL SECTIONS, AND PLAN LAYOUT.

MILL EXISTING PAV'T 0.25' OVERLAY TO MATCH

CLARK COUNTY
WASHINGTON
proud past, promising future

DESIGN & ENGINEERING DIVISION
DESIGN SECTION

ST. JOHNS RD (NE 50TH TO NE 72ND)
PLAN & PROFILE (STA 16+00 TO 21+00)

MICHAEL M. EMRICK
STATE OF WASHINGTON
29030
REGISTERED
PROFESSIONAL ENGINEER
EXPIRES: MAY 26, 2005

CALL 48 HOURS BEFORE YOU DIG
1-800-553-4344
"It's the Law"
NORTHWEST UTILITIES NOTIFICATION CENTER

DESIGNED	MME
DRAWN	BAK
CRP	301422
HOR.	1"=20'
VERT.	1"=5'
DATE	3/18/02
DWG:	PP02
SHEET	OF

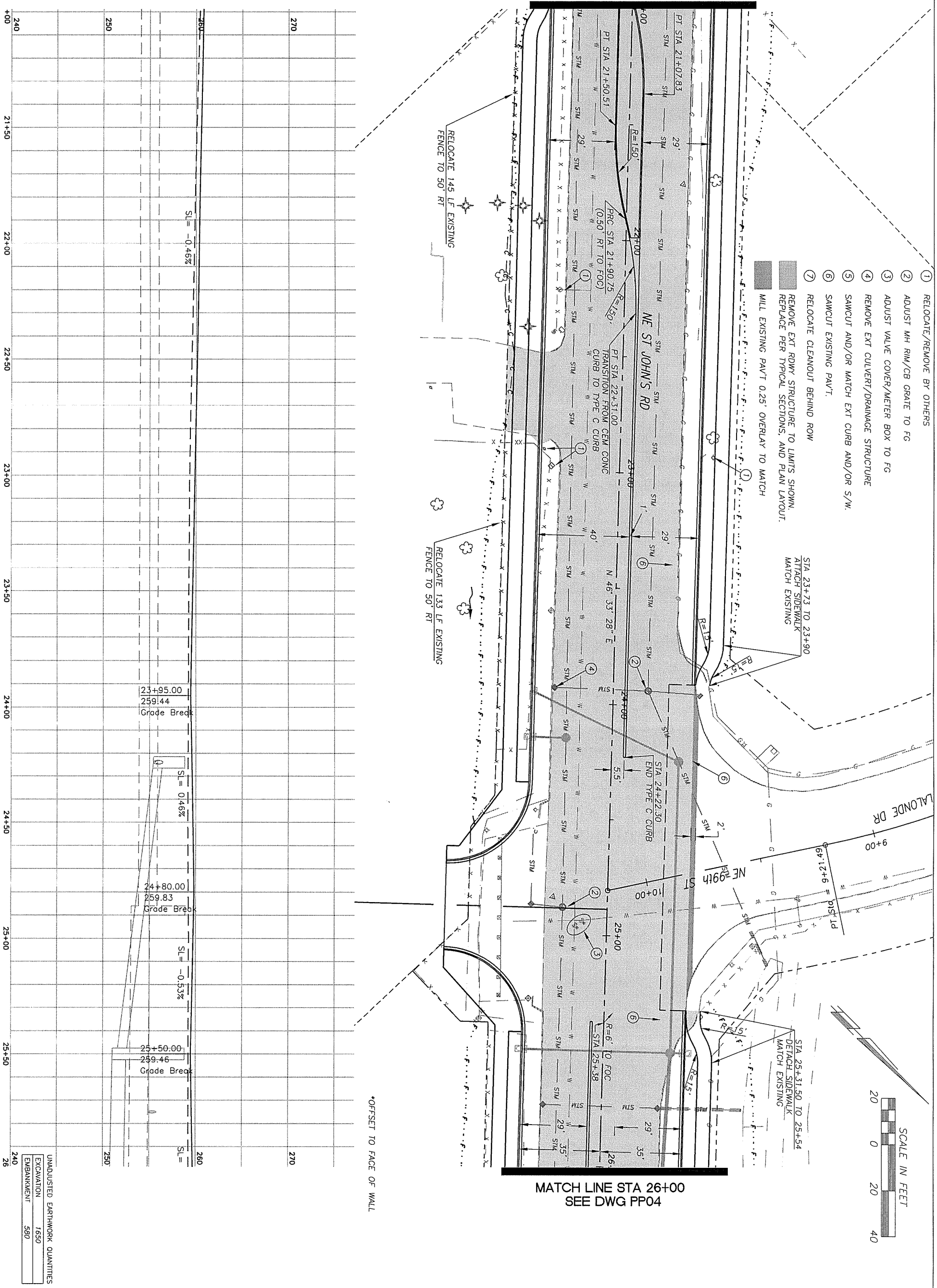

proud past, promising future

CLARK COUNTY
WASHINGTON

DESIGN & ENGINEERING DIVISION
DESIGN SECTION

ST. JOHNS RD (NE 50TH TO NE 72ND)
PLAN & PROFILE (STA 21+00 TO 26+00)

MICHAEL M. ENRICK
STATE OF WASHINGTON
29030
REGISTERED
PROFESSIONAL ENGINEER
EXPIRES: MAY 26, 2005

CALL 48 HOURS BEFORE YOU DIG
1-800-553-4344
"It's the Law"
NORTHWEST UTILITIES NOTIFICATION CENTER

DESIGNED	MME
DRAWN	BAK
CRP	301422
HOR.	1"=20'
VERT.	1"=5'
DATE	3/18/02
DWG:	PP03
SHEET	OF

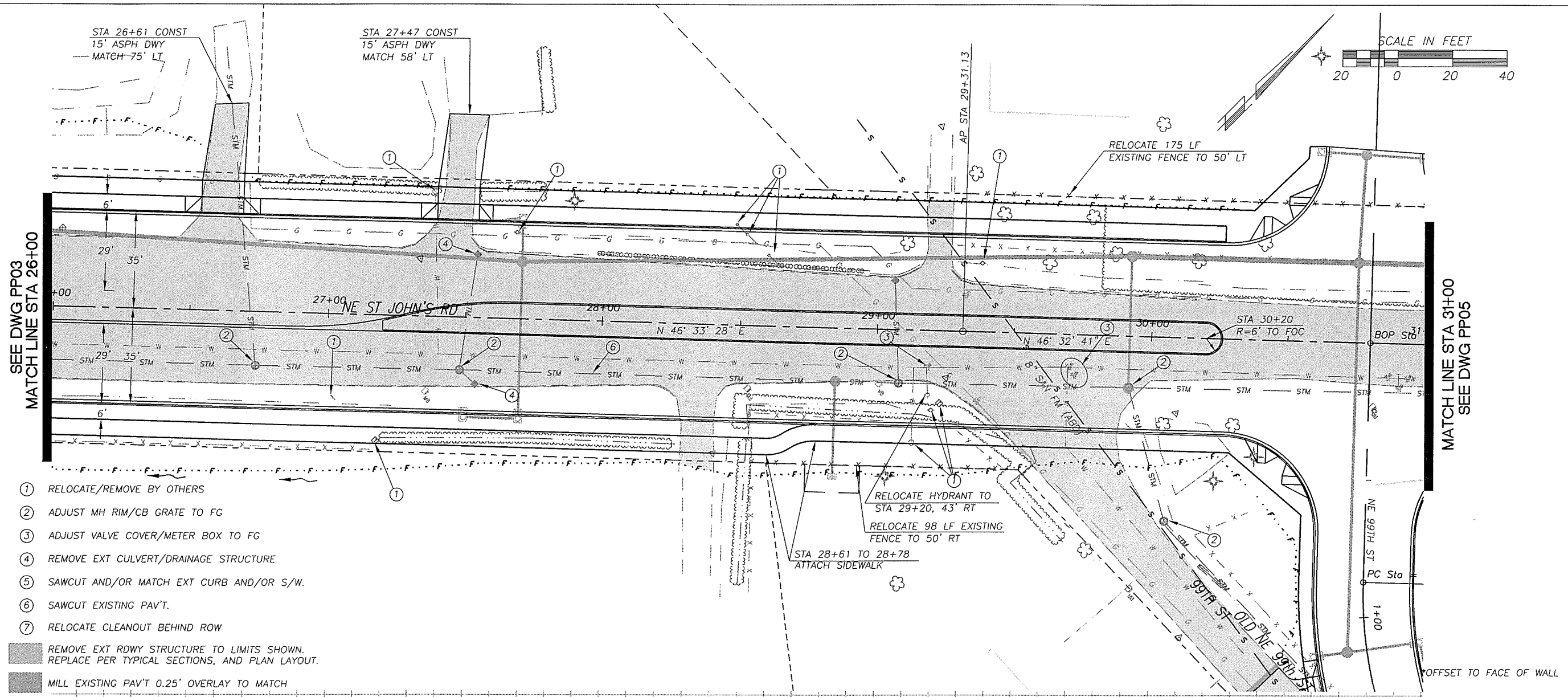

1. RELOCATE/REMOVE BY OTHERS
2. ADJUST MH RIM/CB GRATE TO FG
3. ADJUST VALVE COVER/METER BOX TO FG
4. REMOVE EXT CULVERT/DRAINAGE STRUCTURE
5. SAWCUT AND/OR MATCH EXT CURB AND/OR S/W.
6. SAWCUT EXISTING PAV'T.
7. RELOCATE CLEANOUT BEHIND ROW

REMOVE EXT RDWY STRUCTURE TO LIMITS SHOWN. REPLACE PER TYPICAL SECTIONS, AND PLAN LAYOUT.

MILL EXISTING PAV'T 0.25' OVERLAY TO MATCH

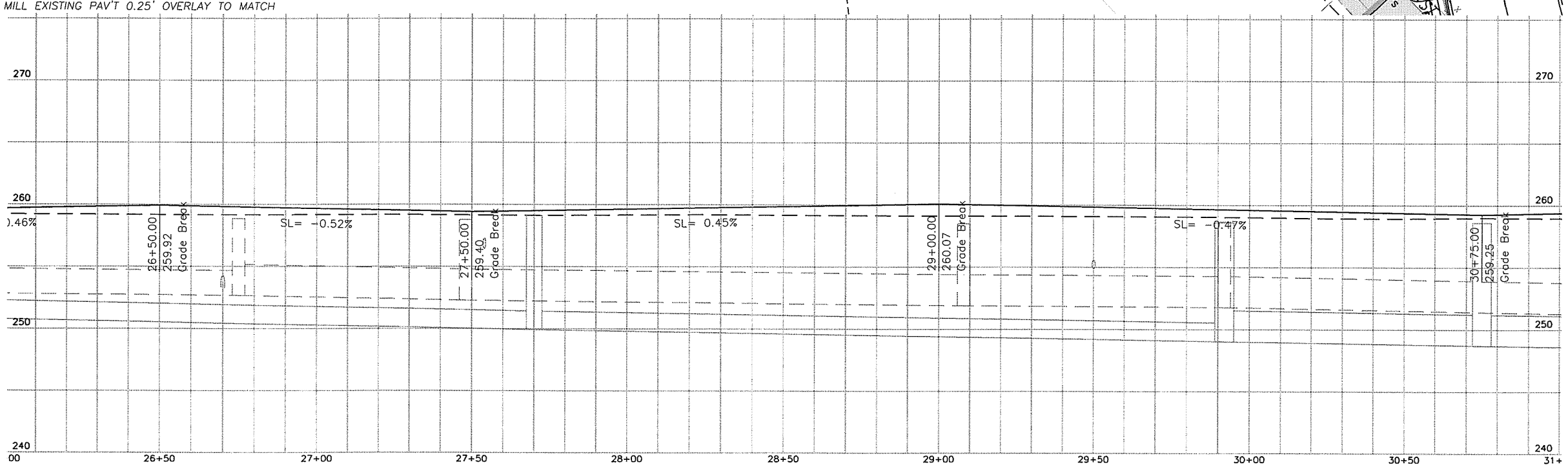

UNADJUSTED EARTHWORK QUANTITIES

EXCAVATION	50
EMBANKMENT	50

DESIGNED	MME
DRAWN	BAK
CRP	301422
HOR.	1"=20'
VERT.	1"=5'
DATE	3/18/02
DWG:	PP04
SHEET	OF

CALL 48 HOURS BEFORE YOU DIG 1-800-553-4344 "It's the Law" NORTHWEST UTILITIES NOTIFICATION CENTER

STATE OF WASHINGTON JAMES L. BEGLEY 29030 REGISTERED PROFESSIONAL ENGINEER EXPIRES: MAY 26, 2005

DESIGN & ENGINEERING DIVISION
DESIGN SECTION

ST. JOHNS RD (NE 50TH TO NE 72ND)
PLAN & PROFILE (STA 26+00 TO 31+00)

proud past, promising future
CLARK COUNTY WASHINGTON

N:\CIP\PROJECTS\301422-STJohns-50thTo72nd\DESIGN\DWGS\PP04.dwg, Layout1, 3/23/2004 5:39:21 PM, begleyk

N:\CIP\PROJECTS\301422-STJohns-50thTo72nd\DESIGN\DWGS\PP05.dwg, Layout1, 3/18/2004 4:53:29 PM, begleyk

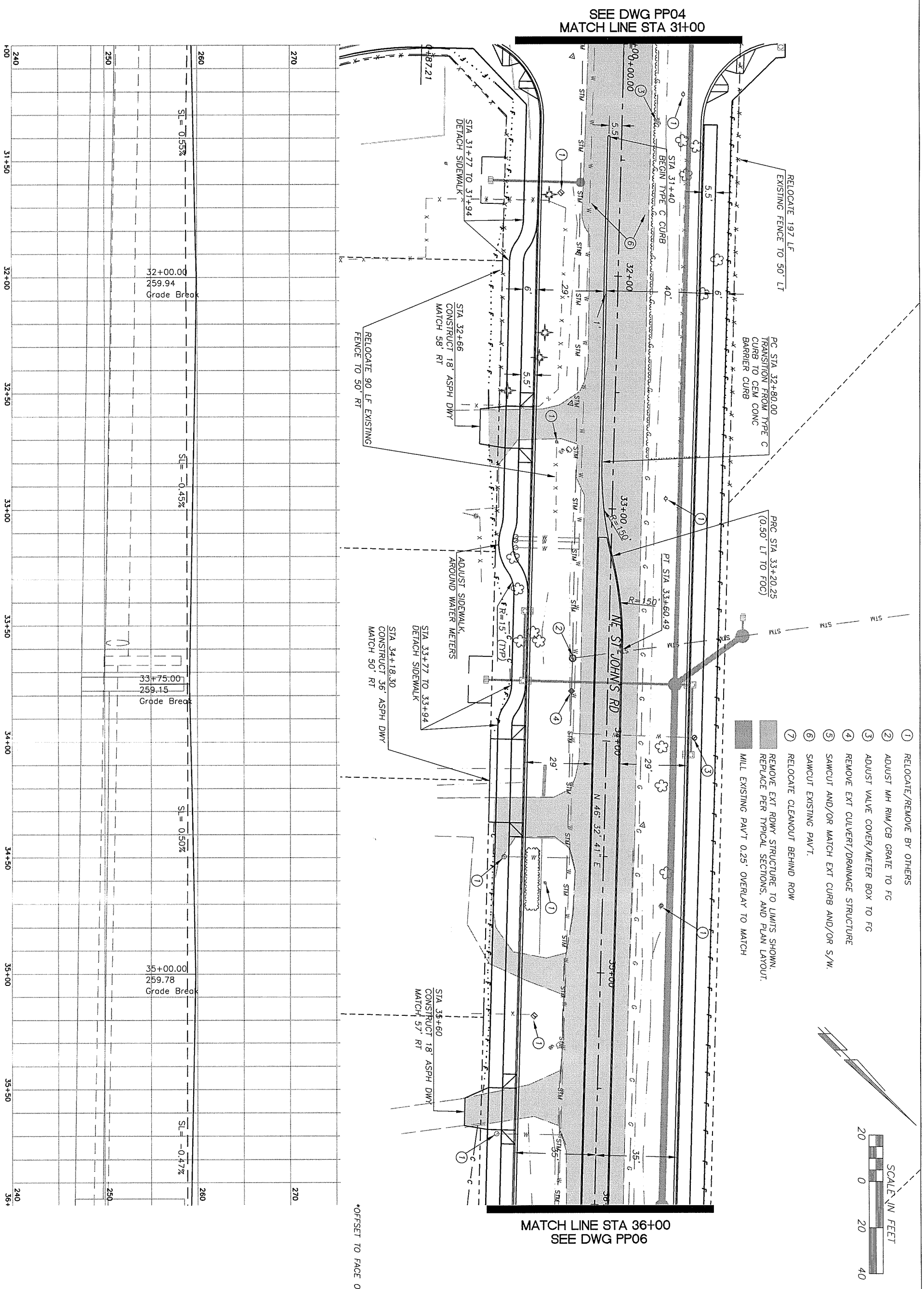

UNADJUSTED EARTHWORK QUANTITIES

EXCAVATION	1350
EMBANKMENT	600

CLARK COUNTY WASHINGTON
proud past, promising future

DESIGN & ENGINEERING DIVISION
DESIGN SECTION

ST. JOHNS RD (NE 50TH TO NE 72ND)
PLAN & PROFILE (STA 31+00 TO 36+00)

MICHAEL M. EMRICK, STATE OF WASHINGTON, 29030, REGISTERED PROFESSIONAL ENGINEER
EXPIRES: MAY 26, 2005

CALL 48 HOURS BEFORE YOU DIG
1-800-553-4344
"It's the Low"
NORTHWEST UTILITIES NOTIFICATION CENTER

DESIGNED	MME
DRAWN	BAK
CRP	301422
HOR.	1"=20'
VERT.	1"=5'
DATE	3/18/02
DWG:	PP05
SHEET	OF

N:\CIP\PROJECTS\301422-STJohns-50thTo72nd\DESIGN\DWGS\PP06.dwg, Layout1, 3/18/2004 4:54:07 PM, begleyk

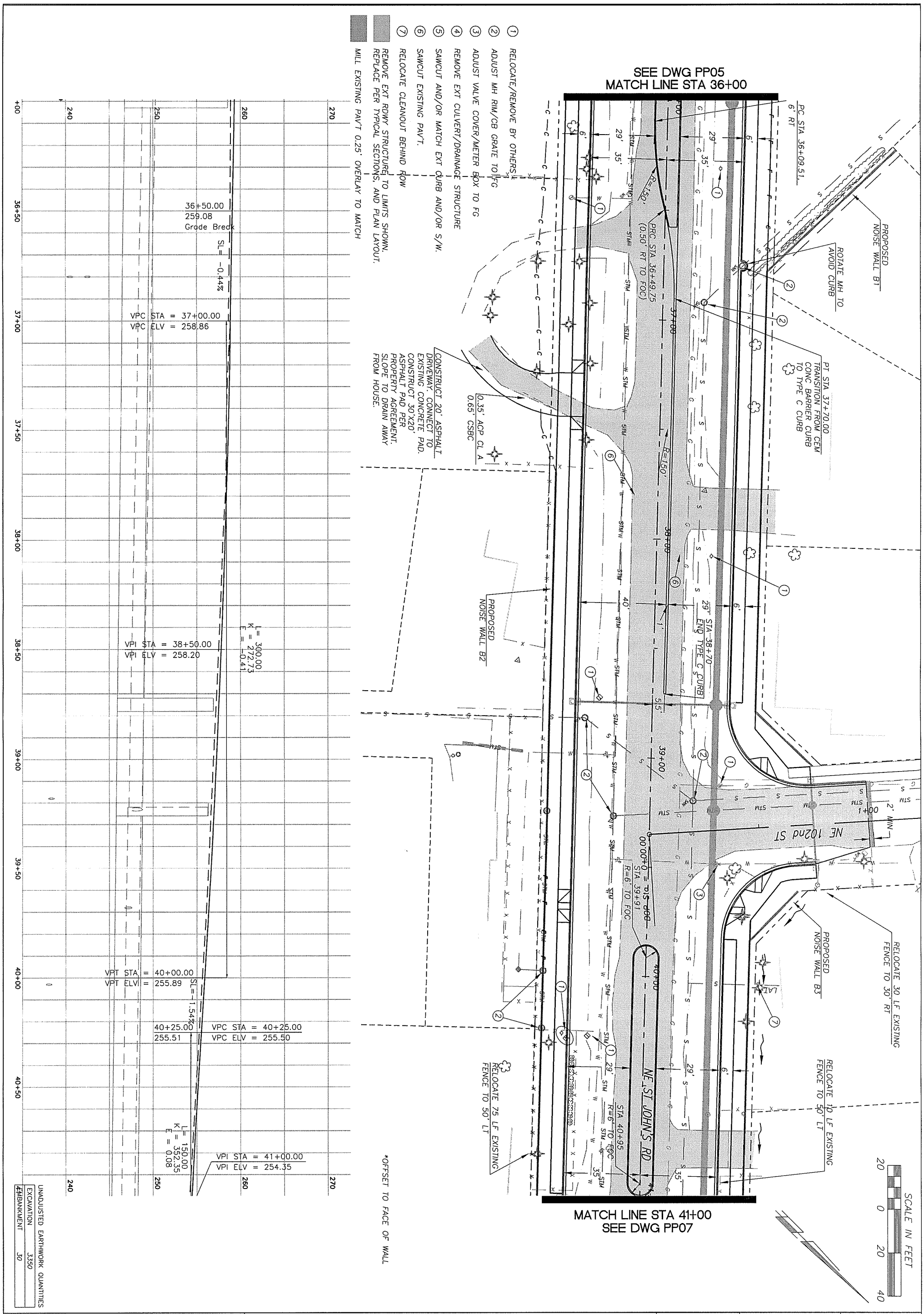

CLARK COUNTY WASHINGTON

proud past, promising future

DESIGN & ENGINEERING DIVISION
DESIGN SECTION

ST. JOHNS RD (NE 50TH TO NE 72ND)
PLAN & PROFILE (STA 36+00 TO 41+00)

MICHAEL M. EMRICK, STATE OF WASHINGTON, 29030, REGISTERED PROFESSIONAL ENGINEER
EXPIRES: MAY 26, 2003

CALL 48 HOURS BEFORE YOU DIG
1-800-553-4344
"It's the Low"
NORTHWEST UTILITIES NOTIFICATION CENTER

DESIGNED	MME
DRAWN	BAK
CRP	301422
HOR.	1"=20'
VERT.	1"=5'
DATE	3/18/02
DWG:	PP06
SHEET	OF

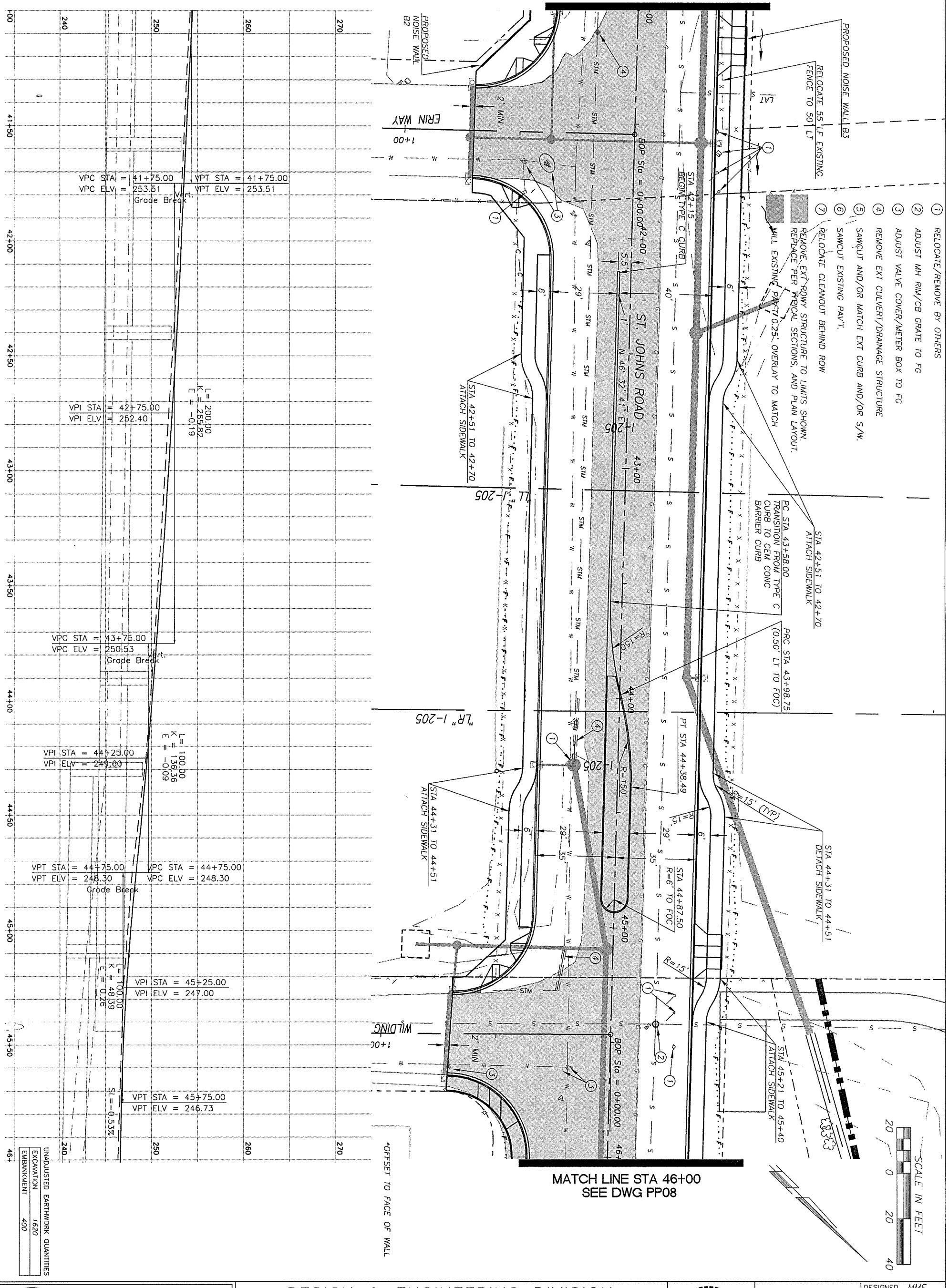

proud past, promising future

CLARK COUNTY
WASHINGTON

DESIGN & ENGINEERING DIVISION
DESIGN SECTION

ST. JOHNS RD (NE 50TH TO NE 72ND)
PLAN & PROFILE (STA 41+00 TO 46+00)

MICHAEL M. EMRICK
STATE OF WASHINGTON
28030
REGISTERED PROFESSIONAL ENGINEER
EXPIRES: MAY 26, 2005

CALL 48 HOURS BEFORE YOU DIG
1-800-553-4344
"It's the Law"
NORTHWEST UTILITIES NOTIFICATION CENTER

DESIGNED	MME
DRAWN	BAK
CRP	301422
HOR.	1"=20'
VERT.	1"=5'
DATE	3/18/02
DWG:	PP07
SHEET	OF

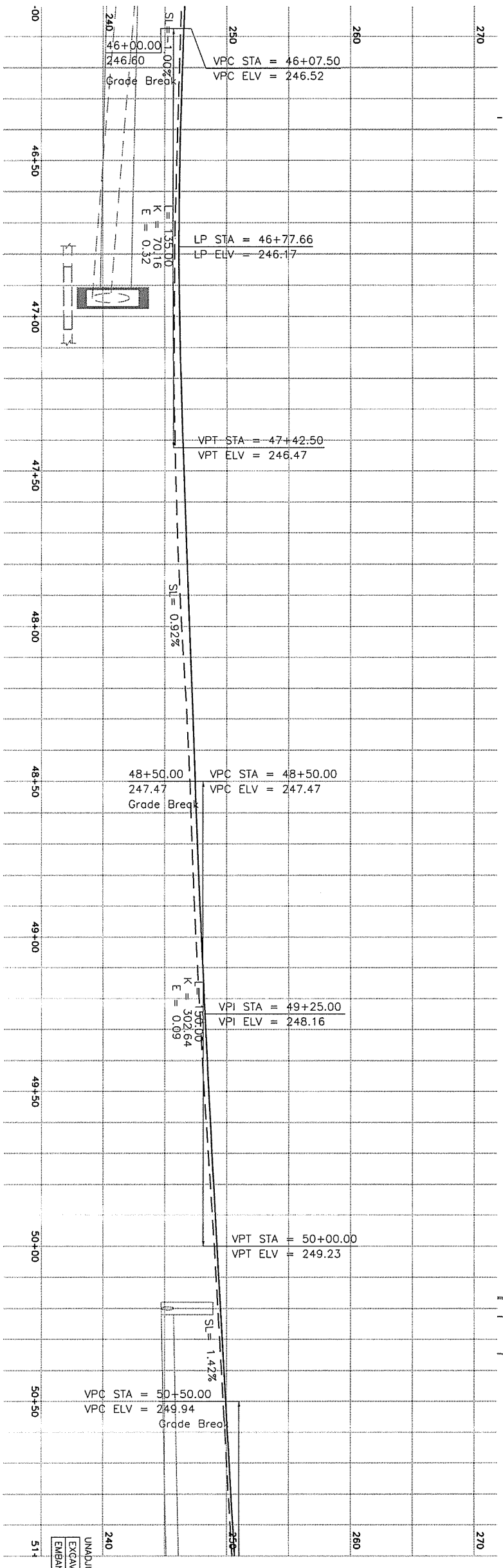

UNADJUSTED EARTHWORK QUANTITIES

EXCAVATION	1,320
EMBANKMENT	480

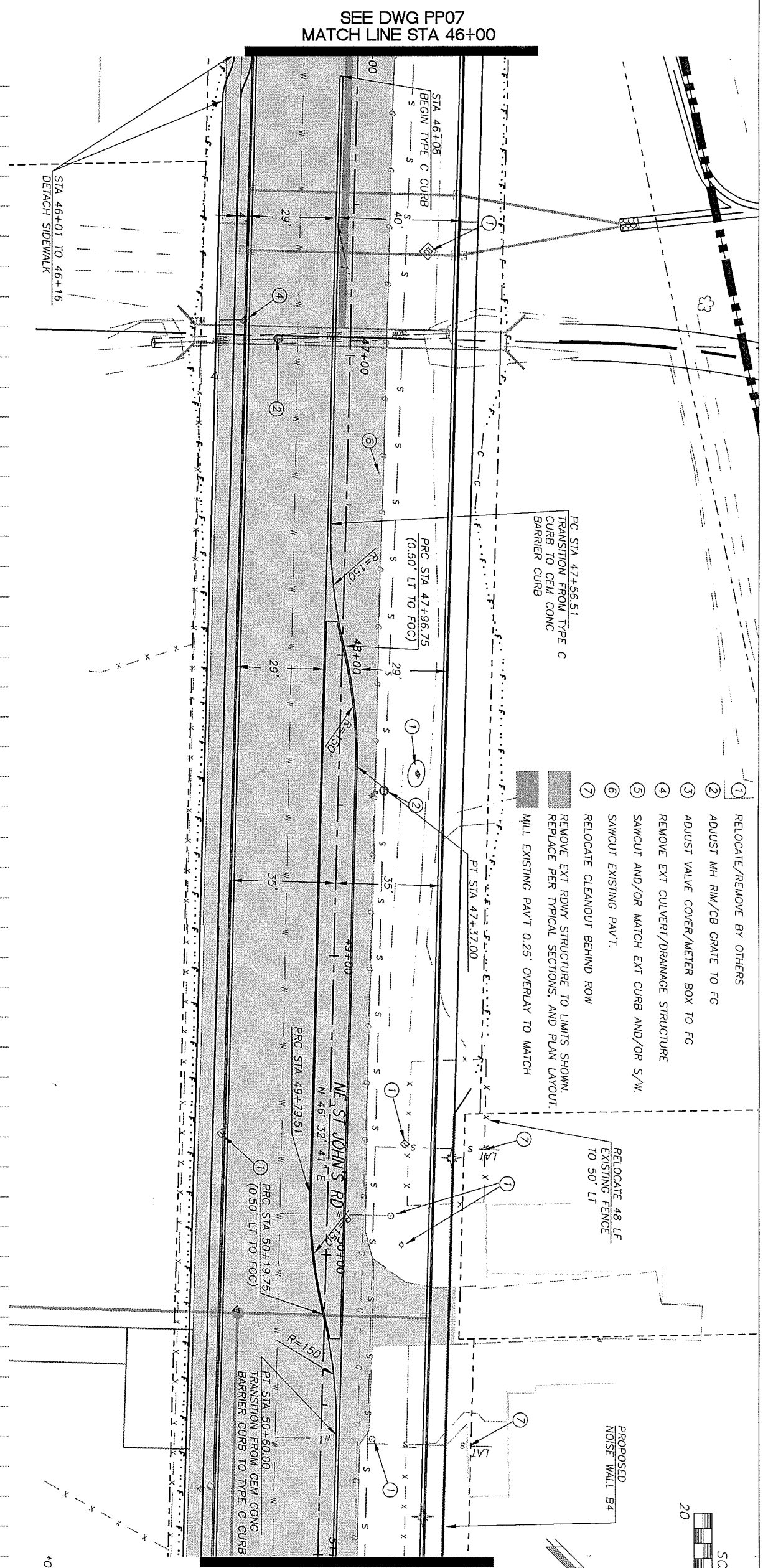

*OFFSET TO FACE OF WALL

CLARK COUNTY
WASHINGTON
proud past, promising future

DESIGN & ENGINEERING DIVISION
DESIGN SECTION

ST. JOHNS RD (NE 50TH TO NE 72ND)
PLAN & PROFILE (STA 46+00 TO 51+00)

MICHAEL M. EMRICK
STATE OF WASHINGTON
29030
REGISTERED
PROFESSIONAL ENGINEER
EXPIRES: MAY 26, 2005

CALL 48 HOURS BEFORE YOU DIG
1-800-553-4344
"It's the Law"
NORTHWEST UTILITIES NOTIFICATION CENTER

DESIGNED	MME
DRAWN	BAK
CRP	301422
HOR.	1"=20'
VERT.	1"=5'
DATE	6/27/03
DWG:	PP08
SHEET	OF

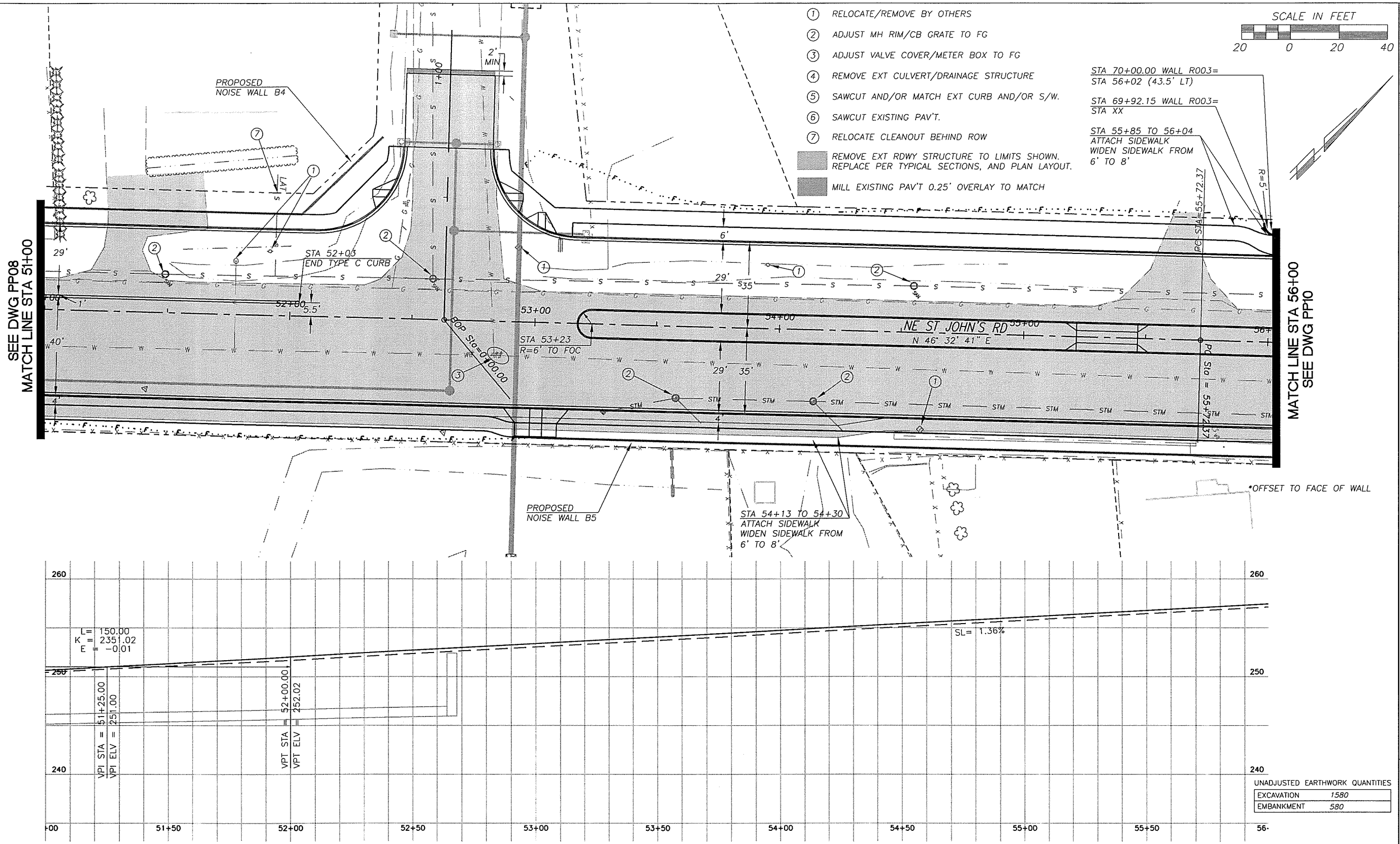

UNADJUSTED EARTHWORK QUANTITIES

EXCAVATION	1580
EMBANKMENT	580

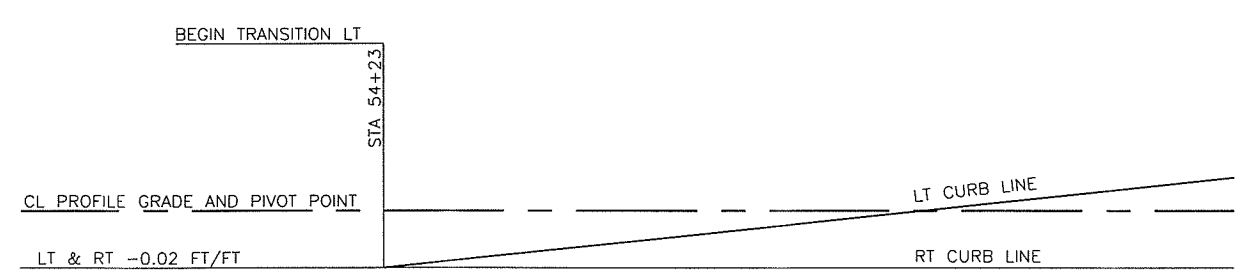

SUPER ELEVATION

DESIGNED MME
DRAWN BAK
CRP 301422
HOR. 1"=20'
VERT. 1"=5'
DATE 3/18/02
DWG: PP09
SHEET OF

CALL 48 HOURS BEFORE YOU DIG
1-800-553-4344
"It's the Law"
NORTHWEST UTILITIES NOTIFICATION CENTER

MICHAEL M. ELRICK
STATE OF WASHINGTON
29030
REGISTERED PROFESSIONAL ENGINEER
EXPIRES MAY 26, 2005

DESIGN & ENGINEERING DIVISION
DESIGN SECTION

ST. JOHNS RD (NE 50TH TO NE 72ND)
PLAN & PROFILE (STA 51+00 TO 56+00)

proud past, promising future
CLARK COUNTY WASHINGTON

N:\CIP\PROJECTS\301422-STJohns-50thTo72nd\DESIGN\DWGS\PP09.dwg, Layout1, 3/18/2004 4:56:51 PM, begleyk

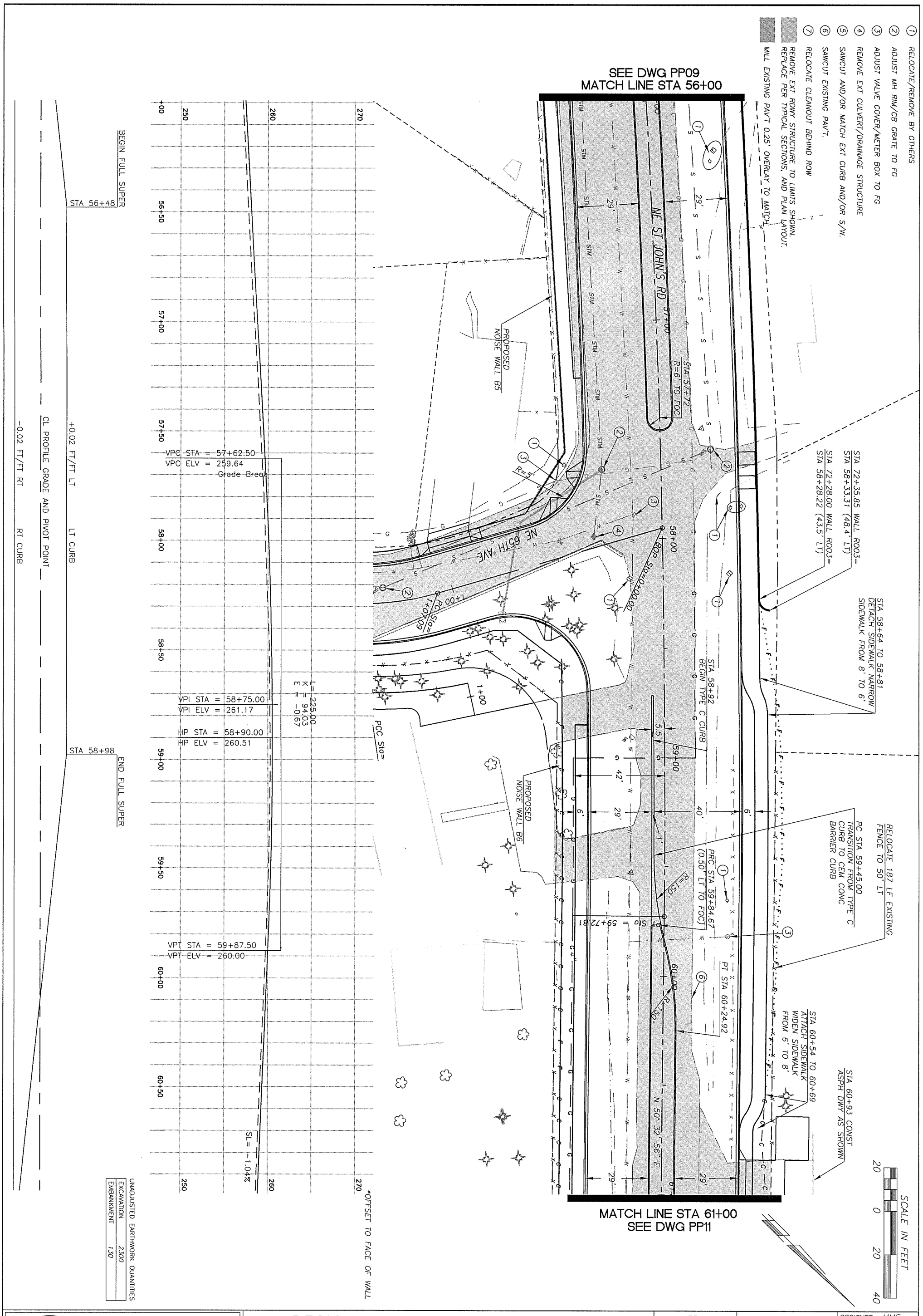
① RELOCATE/REMOVE BY OTHERS
② ADJUST MH RIM/CB GRATE TO FG
③ ADJUST VALVE COVER/METER BOX TO FG
④ REMOVE EXT CULVERT/DRAINAGE STRUCTURE
⑤ SAWCUT AND/OR MATCH EXT CURB AND/OR S/W.
⑥ SAWCUT EXISTING PAV'T.
⑦ RELOCATE CLEANOUT BEHIND ROW
REMOVE EXT RDWY STRUCTURE TO LIMITS SHOWN, REPLACE PER TYPICAL SECTIONS, AND PLAN LAYOUT.
MILL EXISTING PAV'T 0.25' OVERLAY TO MATCH
SEE DWG PP09
MATCH LINE STA 56+00
NE ST JOHN'S RD
STA 57+72 R=6' TO FOC
PROPOSED NOISE WALL B5
STA 72+35.85 WALL R003= STA 58+33.31 (48.4' LT)
STA 72+28.00 WALL R003= STA 58+28.22 (43.5' LT)
STA 58+64 TO 58+81 DETACH SIDEWALK NARROW SIDEWALK FROM 8' TO 6'
NE 65TH AVE
STA 58+92 BEGIN TYPE C CURB
PROPOSED NOISE WALL B6
RELOCATE 187 LF EXISTING FENCE TO 50' LT
PC STA 59+45.00 TRANSITION FROM TYPE C CURB TO CEM CONC BARRIER CURB
PRC STA 59+84.67 (0.50' LT TO FOC)
PT STA 60+24.92
N 50° 32' 56" E
STA 60+54 TO 60+69 ATTACH SIDEWALK WIDEN SIDEWALK FROM 6' TO 8'
STA 60+93 CONST ASPH DWY AS SHOWN
SCALE IN FEET
MATCH LINE STA 61+00
SEE DWG PP11
BEGIN FULL SUPER
STA 56+48
STA 58+98
END FULL SUPER
+0.02 FT/FT LT
LT CURB
CL PROFILE GRADE AND PIVOT POINT
-0.02 FT/FT RT
RT CURB
VPC STA = 57+62.50
VPC ELV = 259.64
Grade Break
VPI STA = 58+75.00
VPI ELV = 261.17
HP STA = 58+90.00
HP ELV = 260.51
VPT STA = 59+87.50
VPT ELV = 260.00
L= 225.00
K = 94.03
E = -0.67
SL= -1.04%
*OFFSET TO FACE OF WALL
UNADJUSTED EARTHWORK QUANTITIES
EXCAVATION 2300
EMBANKMENT 130
DESIGN & ENGINEERING DIVISION
DESIGN SECTION
ST. JOHNS RD (NE 50TH TO NE 72ND)
PLAN & PROFILE (STA 56+00 TO 61+00)
proud past, promising future
CLARK COUNTY
WASHINGTON
MICHAEL M. EMRICK
STATE OF WASHINGTON
29030
REGISTERED
PROFESSIONAL ENGINEER
EXPIRES:MAY 26, 2005
CALL 48 HOURS BEFORE YOU DIG
1-800-553-4344
"It's the Law"
NORTHWEST UTILITIES NOTIFICATION CENTER
DESIGNED MME
DRAWN BAK
CRP 301422
HOR. 1"=20'
VERT. 1"=5'
DATE 3/18/02
DWG: PP10
SHEET OF

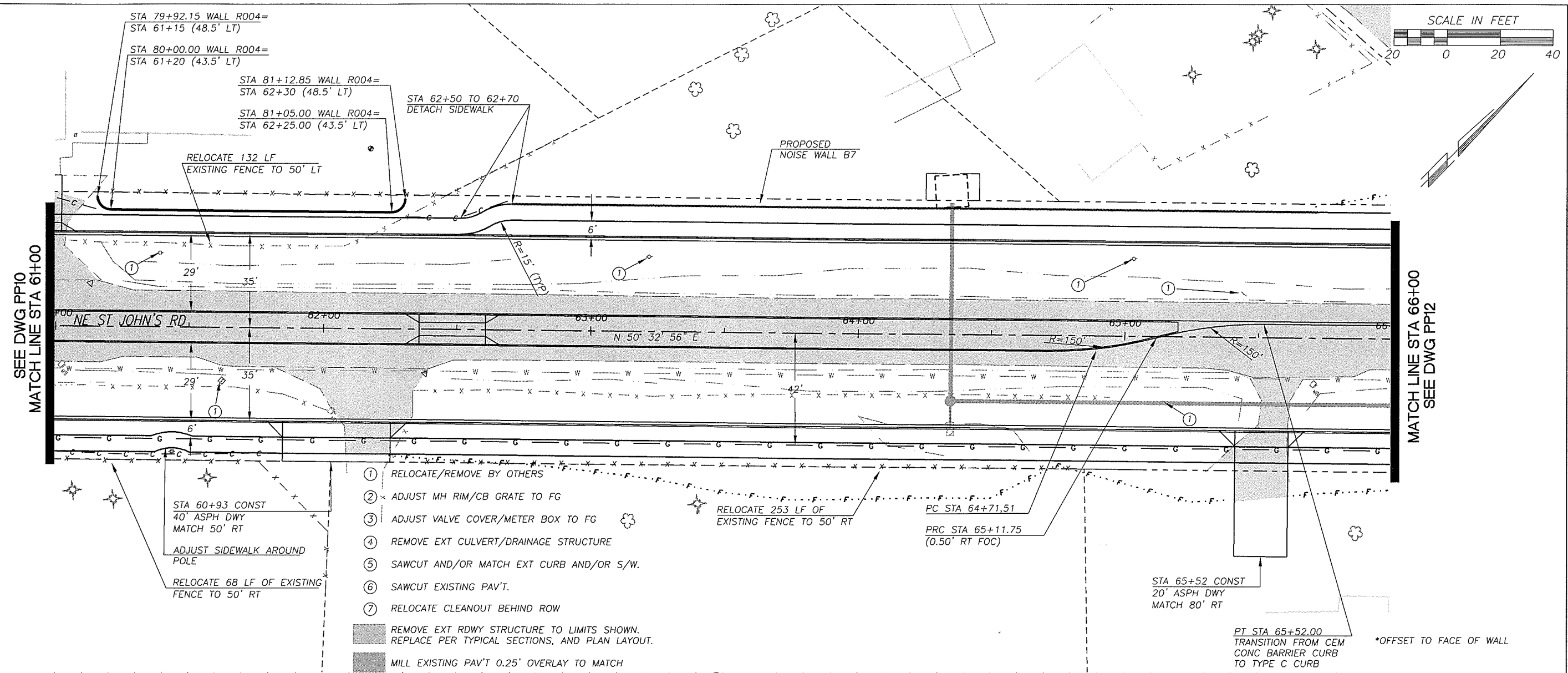

1. RELOCATE/REMOVE BY OTHERS
2. ADJUST MH RIM/CB GRATE TO FG
3. ADJUST VALVE COVER/METER BOX TO FG
4. REMOVE EXT CULVERT/DRAINAGE STRUCTURE
5. SAWCUT AND/OR MATCH EXT CURB AND/OR S/W.
6. SAWCUT EXISTING PAV'T.
7. RELOCATE CLEANOUT BEHIND ROW

REMOVE EXT RDWY STRUCTURE TO LIMITS SHOWN. REPLACE PER TYPICAL SECTIONS, AND PLAN LAYOUT.

MILL EXISTING PAV'T 0.25' OVERLAY TO MATCH

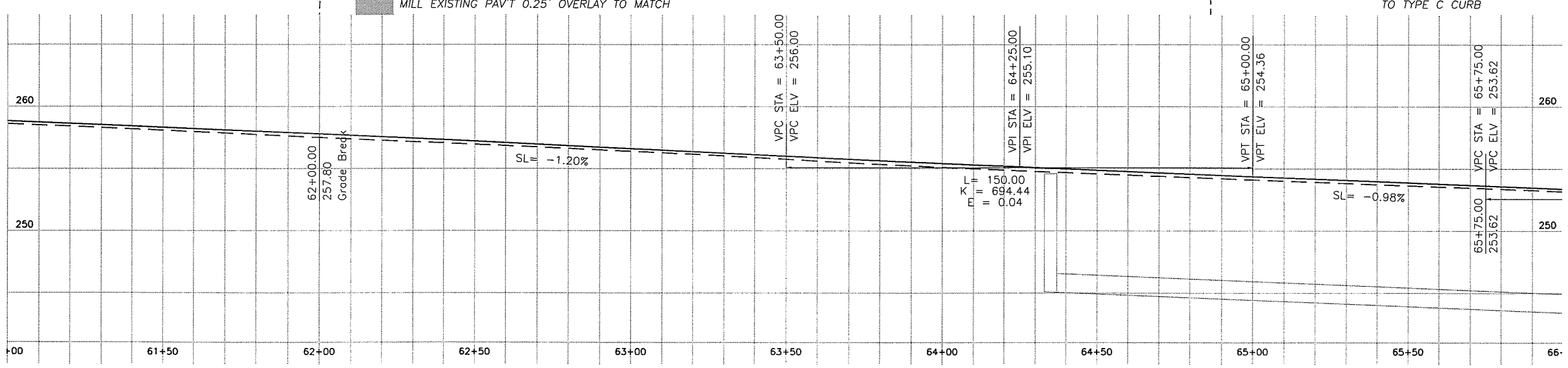

UNADJUSTED EARTHWORK QUANTITIES

EXCAVATION	1680
EMBANKMENT	1660

BEGIN
NORMAL CROWN
STA 61+22
CL PROFILE GRADE AND PIVOT POINT
LT CURB LINE
LT & RT -0.02 FT/FT

DESIGNED MME
DRAWN BAK
CRP 301422
HOR. 1"=20'
VERT. 1"=5'
DATE 3/18/02
DWG: PP11
SHEET OF

CALL 48 HOURS BEFORE YOU DIG
1-800-553-4344
"It's the Law"
NORTHWEST UTILITIES NOTIFICATION CENTER

MICHAEL M. EMRICK
STATE OF WASHINGTON
29030
REGISTERED PROFESSIONAL ENGINEER
EXPIRES MAY 26, 2005

DESIGN & ENGINEERING DIVISION
DESIGN SECTION

ST. JOHNS RD (NE 50TH TO NE 72ND)
PLAN & PROFILE (STA 61+00 TO 66+00)

proud past, promising future
CLARK COUNTY
WASHINGTON

N:\CIP\PROJECTS\301422-STJohns-50thTo72nd\DESIGN\DWGS\PP11.dwg, Layout1, 3/23/2004 5:42:38 PM, begleyk

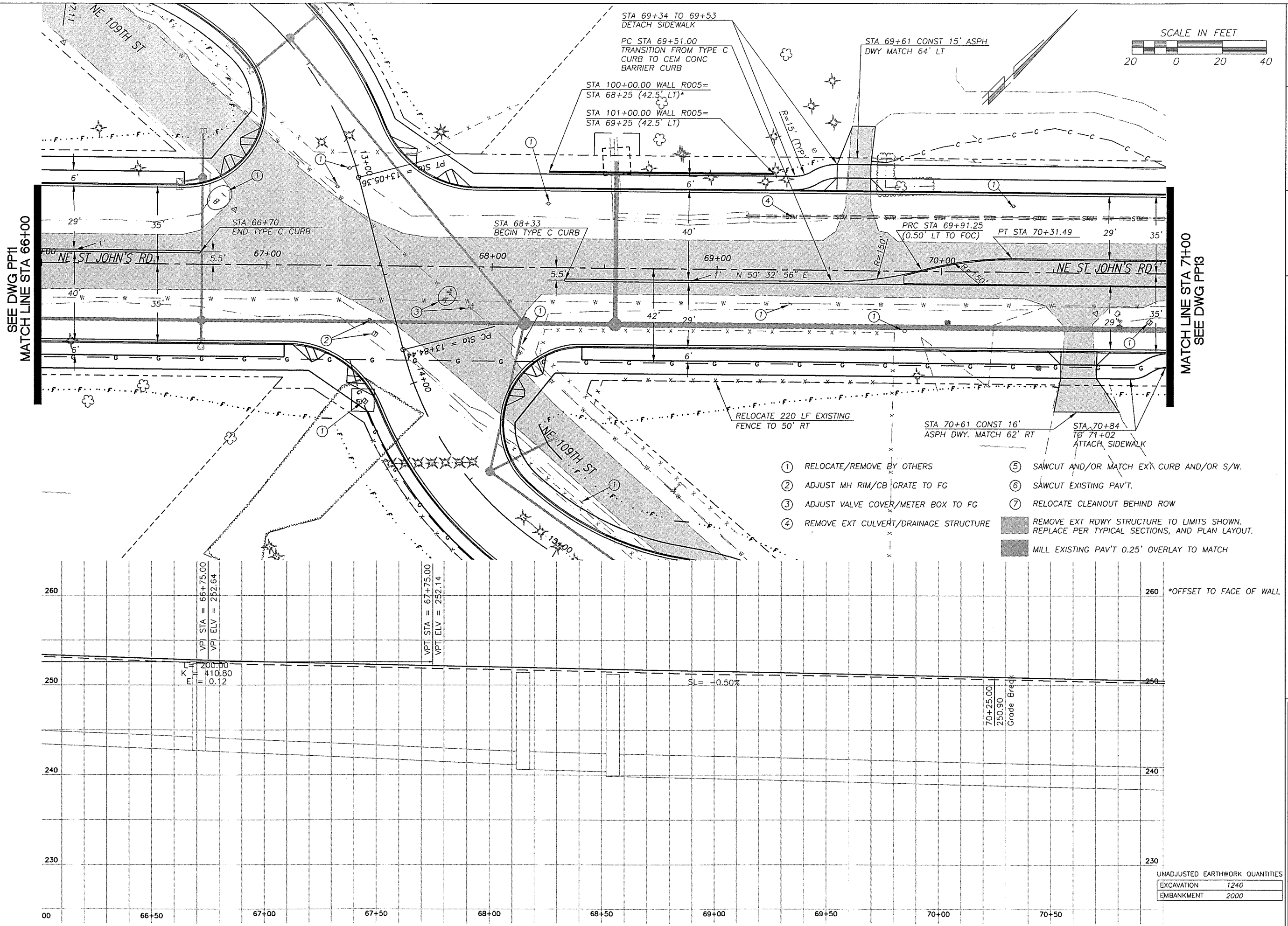

UNADJUSTED EARTHWORK QUANTITIES

EXCAVATION	1240
EMBANKMENT	2000

DESIGNED MME
DRAWN BAK
CRP 301422
HOR. 1"=20'
VERT. 1"=5'
DATE 3/18/02
DWG: PP12
SHEET OF

CALL 48 HOURS BEFORE YOU DIG
1-800-553-4344
"It's the Law"
NORTHWEST UTILITIES NOTIFICATION CENTER

MICHAEL M. EMRICK
STATE OF WASHINGTON
29930
REGISTERED PROFESSIONAL ENGINEER
EXPIRES MAY 26, 2005

DESIGN & ENGINEERING DIVISION
DESIGN SECTION

ST. JOHNS RD (NE 50TH TO NE 72ND)
PLAN & PROFILE (STA 66+00 TO 71+00)

proud past, promising future
CLARK COUNTY
WASHINGTON

N:\CIP\PROJECTS\301422-STJohns-50thTo72nd\DESIGN\DWGS\PP12.dwg, Layout1, 3/18/2004 4:59:18 PM, begleyk

1. RELOCATE/REMOVE BY OTHERS
2. ADJUST MH RIM/CB GRATE TO FG
3. ADJUST VALVE COVER/METER BOX TO FG
4. REMOVE EXT CULVERT/DRAINAGE STRUCTURE
5. SAWCUT AND/OR MATCH EXT CURB AND/OR S/W.
6. SAWCUT EXISTING PAV'T.
7. RELOCATE CLEANOUT BEHIND ROW

REMOVE EXT RDWY STRUCTURE TO LIMITS SHOWN. REPLACE PER TYPICAL SECTIONS, AND PLAN LAYOUT.

MILL EXISTING PAV'T 0.25' OVERLAY TO MATCH

SCALE IN FEET
20 0 20 40

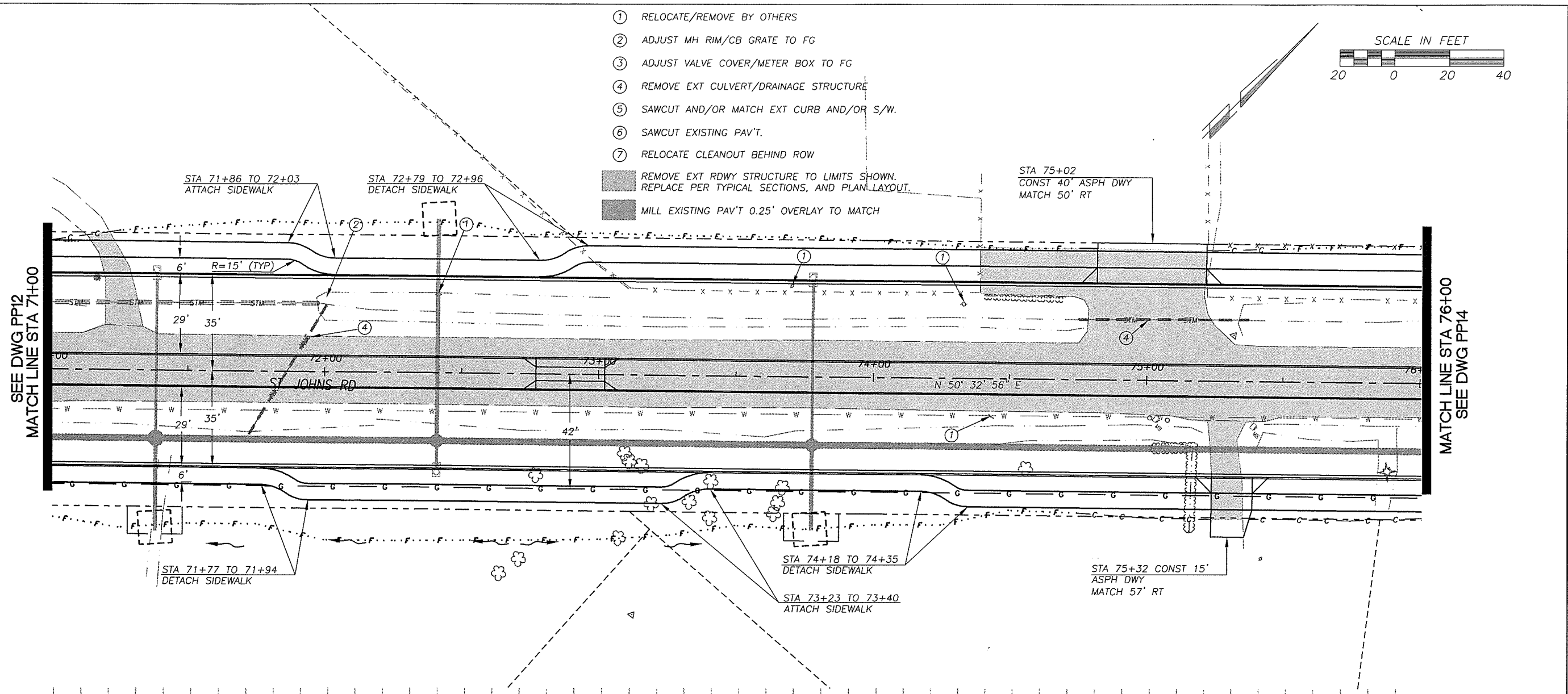

*OFFSET TO FACE OF WALL

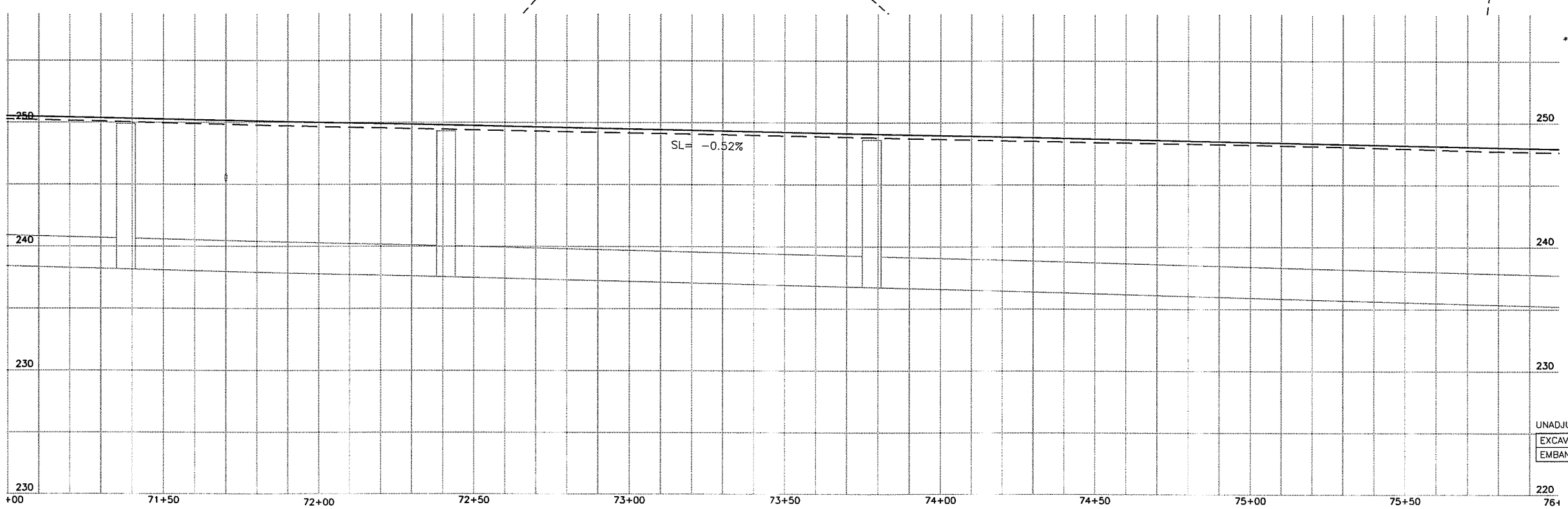

UNADJUSTED EARTHWORK QUANTITIES

EXCAVATION	1340
EMBANKMENT	1570

DESIGNED	MME
DRAWN	BAK
CRP	301422
HOR.	1"=20'
VERT.	1"=5'
DATE	3/18/02
DWG:	PP13
SHEET	OF

CALL 48 HOURS BEFORE YOU DIG 1-800-553-4344 "It's the Law" NORTHWEST UTILITIES NOTIFICATION CENTER

STATE OF WASHINGTON LARRY E. BRICKER 29030 REGISTERED PROFESSIONAL ENGINEER EXPIRES MAY 26, 2005

DESIGN & ENGINEERING DIVISION
DESIGN SECTION

ST. JOHNS RD (NE 50TH TO NE 72ND)
PLAN & PROFILE (STA 71+00 TO 76+00)

proud past, promising future
CLARK COUNTY WASHINGTON

N:\CIP\PROJECTS\301422-STJohns-50thTo72nd\DESIGN\DWGS\PP13.dwg, Layout1, 3/18/2004 5:03:23 PM, begleyk

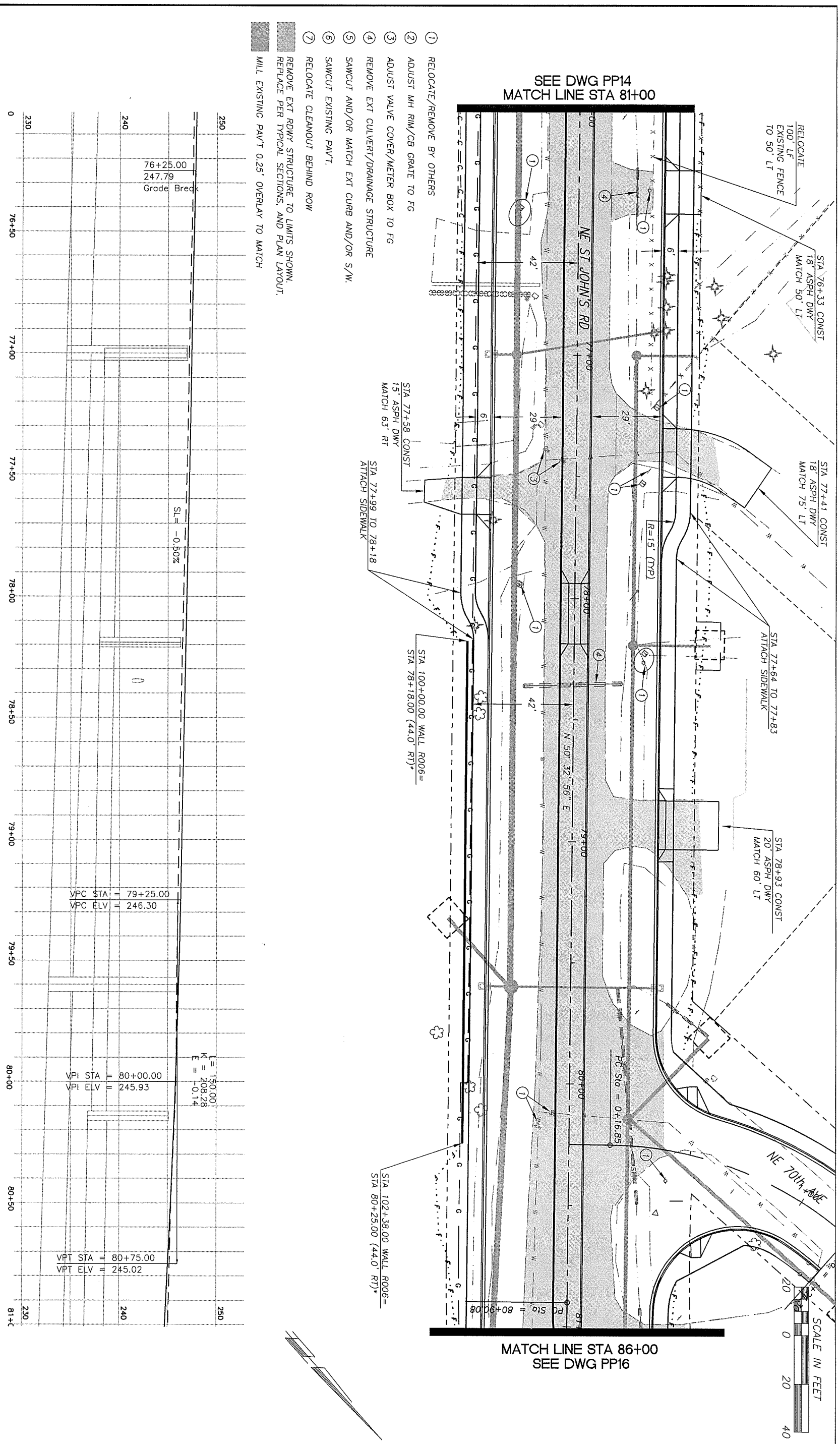

1. RELOCATE/REMOVE BY OTHERS
2. ADJUST MH RIM/CB GRATE TO FG
3. ADJUST VALVE COVER/METER BOX TO FG
4. REMOVE EXT CULVERT/DRAINAGE STRUCTURE
5. SAWCUT AND/OR MATCH EXT CURB AND/OR S/W.
6. SAWCUT EXISTING PAV'T.
7. RELOCATE CLEANOUT BEHIND ROW

REMOVE EXT RDWY STRUCTURE TO LIMITS SHOWN. REPLACE PER TYPICAL SECTIONS, AND PLAN LAYOUT.

MILL EXISTING PAV'T 0.25' OVERLAY TO MATCH

UNADJUSTED EARTHWORK QUANTITIES

EXCAVATION	1090
EMBANKMENT	1570

proud past, promising future

CLARK COUNTY
WASHINGTON

DESIGN & ENGINEERING DIVISION
DESIGN SECTION

ST. JOHNS RD (NE 50TH TO NE 72ND)
PLAN & PROFILE (STA 81+00 TO 86+00)

MICHAEL M. EMRICK
STATE OF WASHINGTON
29030
REGISTERED PROFESSIONAL ENGINEER
EXPIRES: MAY 26, 2005

CALL 48 HOURS BEFORE YOU DIG
1-800-553-4344
"It's the Law"
NORTHWEST UTILITIES NOTIFICATION CENTER

DESIGNED	MME
DRAWN	BAK
CRP	301422
HOR.	1"=20'
VERT.	1"=5'
DATE	3/18/02
DWG:	PP14
SHEET	OF

① RELOCATE/REMOVE BY OTHERS
② ADJUST MH RIM/CB GRATE TO FG
③ ADJUST VALVE COVER/METER BOX TO FG
④ REMOVE EXT CULVERT/DRAINAGE STRUCTURE
⑤ SAWCUT AND/OR MATCH EXT CURB AND/OR S/W.
⑥ SAWCUT EXISTING PAV'T.
⑦ RELOCATE CLEANOUT BEHIND ROW

REMOVE EXT RDWY STRUCTURE TO LIMITS SHOWN, REPLACE PER TYPICAL SECTIONS, AND PLAN LAYOUT.

MILL EXISTING PAV'T 0.25' OVERLAY TO MATCH

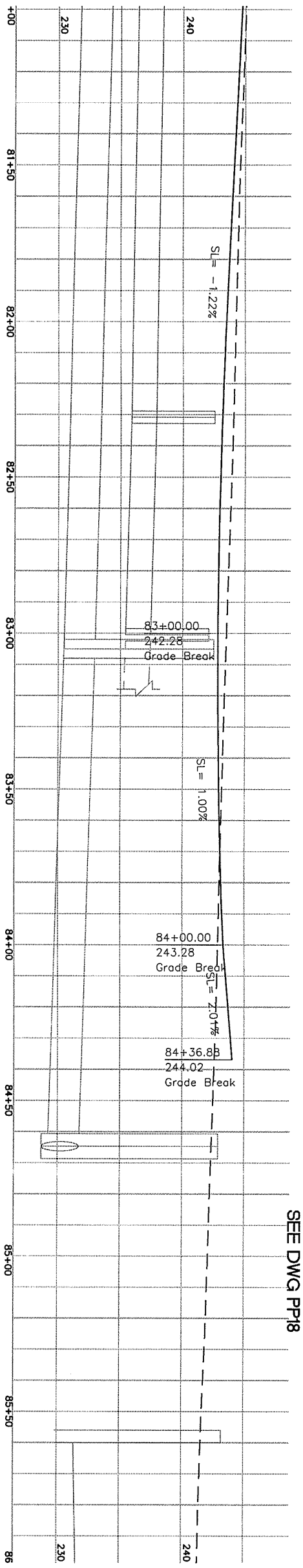

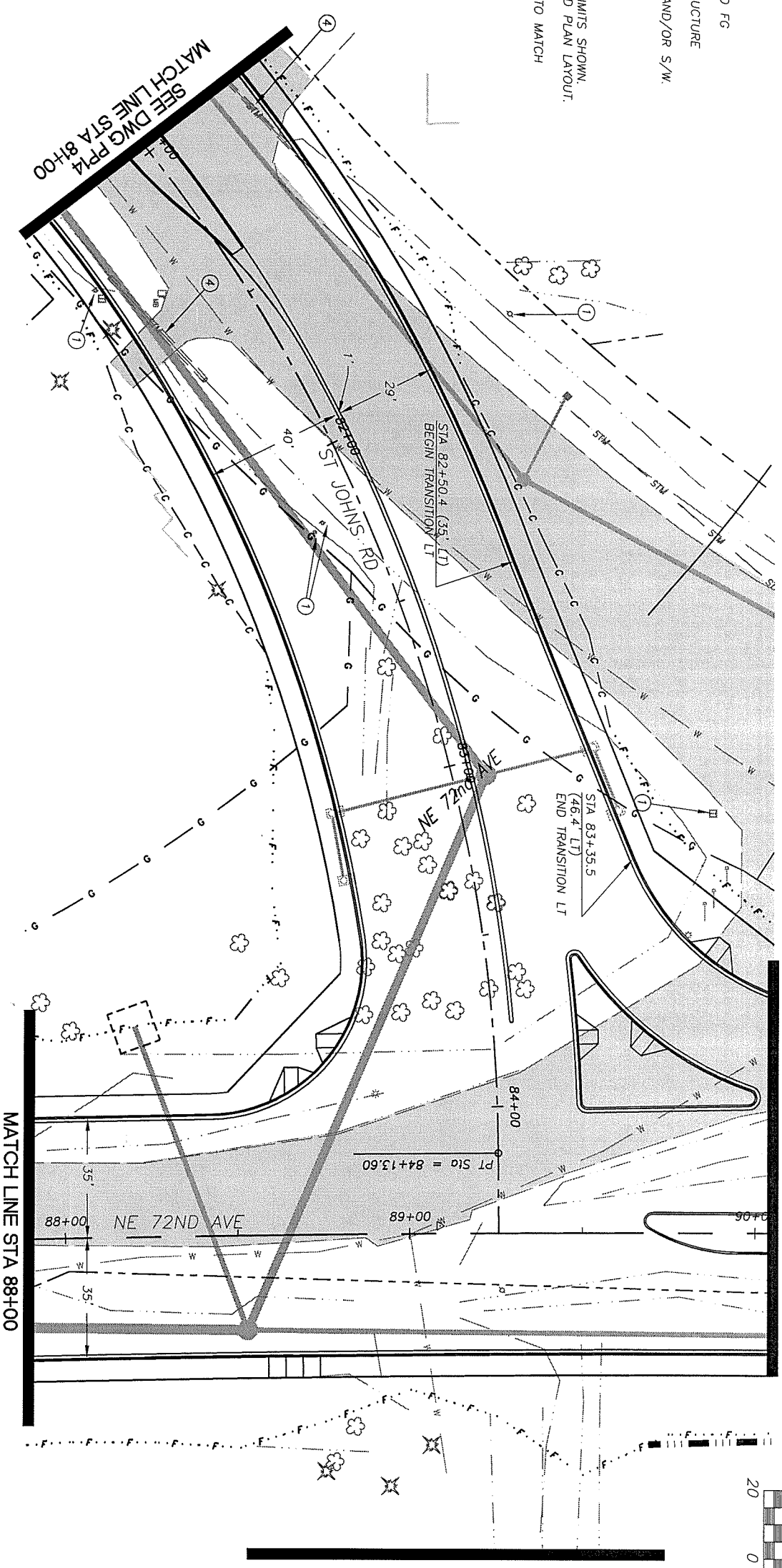

UNADJUSTED EARTHWORK QUANTITIES

EXCAVATION	1700
EMBANKMENT	1090

proud past, promising future
CLARK COUNTY
WASHINGTON

DESIGN & ENGINEERING DIVISION
DESIGN SECTION

ST. JOHNS RD (NE 50TH TO NE 72ND)
PLAN & PROFILE (STA 81+00 TO 86+00)

MICHAEL M. EMRICK
STATE OF WASHINGTON
29030
REGISTERED
PROFESSIONAL ENGINEER
EXPIRES: MAY 26, 2005

CALL 48 HOURS BEFORE YOU DIG
1-800-553-4344
"It's the Law"
NORTHWEST UTILITIES NOTIFICATION CENTER

DESIGNED	MME
DRAWN	BAK
CRP	301422
HOR.	1"=20'
VERT.	1"=5'
DATE	3/18/02
DWG:	PP15
SHEET	OF

1. RELOCATE/REMOVE BY OTHERS
2. ADJUST MH RIM/CB GRATE TO FG
3. ADJUST VALVE COVER/METER BOX TO FG
4. REMOVE EXT CULVERT/DRAINAGE STRUCTURE
5. SAWCUT AND/OR MATCH EXT CURB AND/OR S/W.
6. SAWCUT EXISTING PAV'T.
7. RELOCATE CLEANOUT BEHIND ROW

REMOVE EXT RDWY STRUCTURE TO LIMITS SHOWN. REPLACE PER TYPICAL SECTIONS, AND PLAN LAYOUT.

MILL EXISTING PAV'T 0.25' OVERLAY TO MATCH

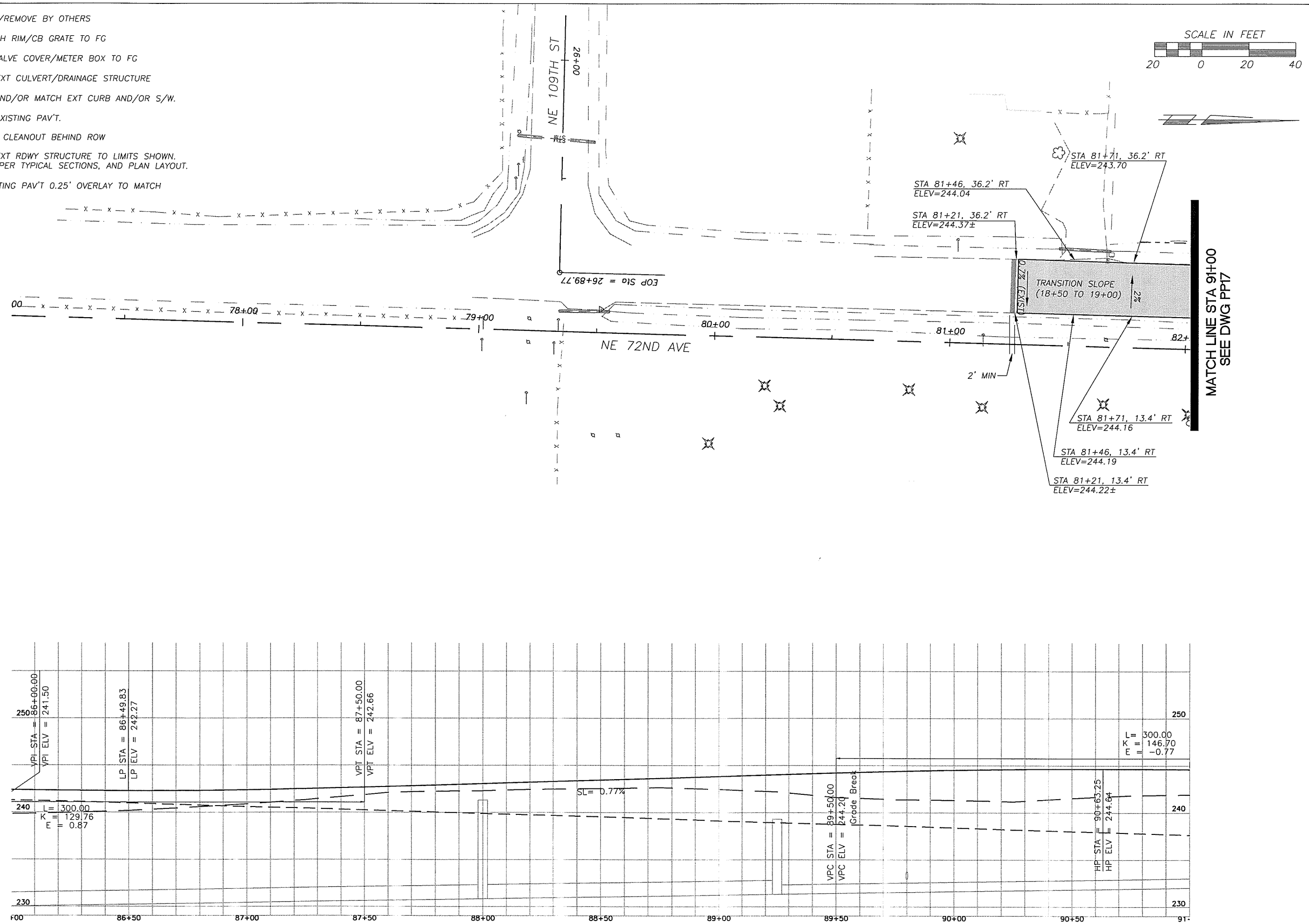

UNADJUSTED EARTHWORK QUANTITIES

EXCAVATION	2180
EMBANKMENT	60

DESIGNED MME
DRAWN BAK
CRP 301422
HOR. 1"=20'
VERT. 1"=5'
DATE 3/18/02
DWG: PP16
SHEET OF

CALL 48 HOURS BEFORE YOU DIG
1-800-553-4344
"It's the Law"
NORTHWEST UTILITIES NOTIFICATION CENTER

MICHAEL M. EMRICK
STATE OF WASHINGTON
29030
REGISTERED PROFESSIONAL ENGINEER
EXPIRES MAY 26, 2005

DESIGN & ENGINEERING DIVISION
DESIGN SECTION

ST. JOHNS RD (NE 50TH TO NE 72ND)
PLAN & PROFILE (STA 77+00 TO 82+00)

proud past, promising future
CLARK COUNTY
WASHINGTON

N:\CIP\PROJECTS\301422-STJohns-50thTo72nd\DESIGN\DWGS\PP16.dwg, Layout1, 3/18/2004 5:07:27 PM, begleyk

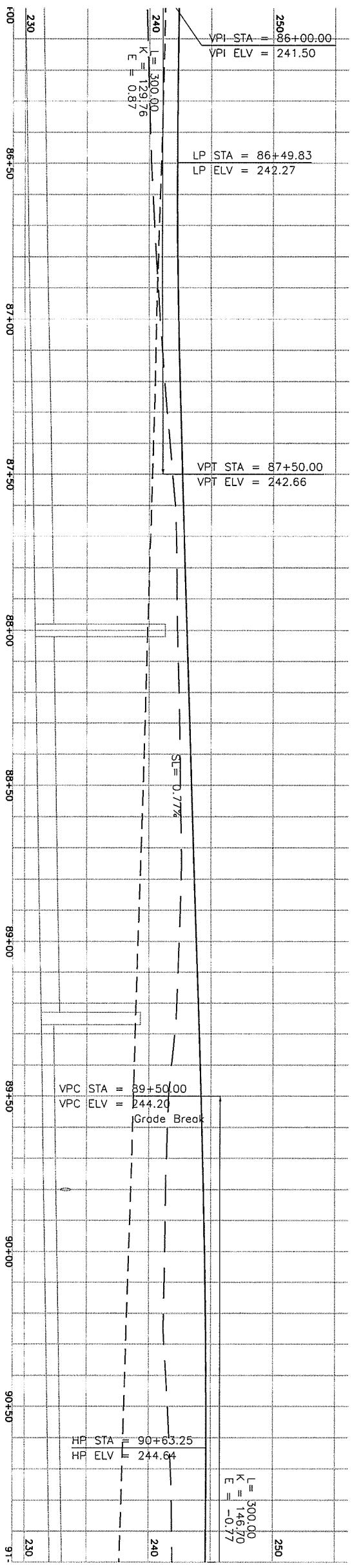

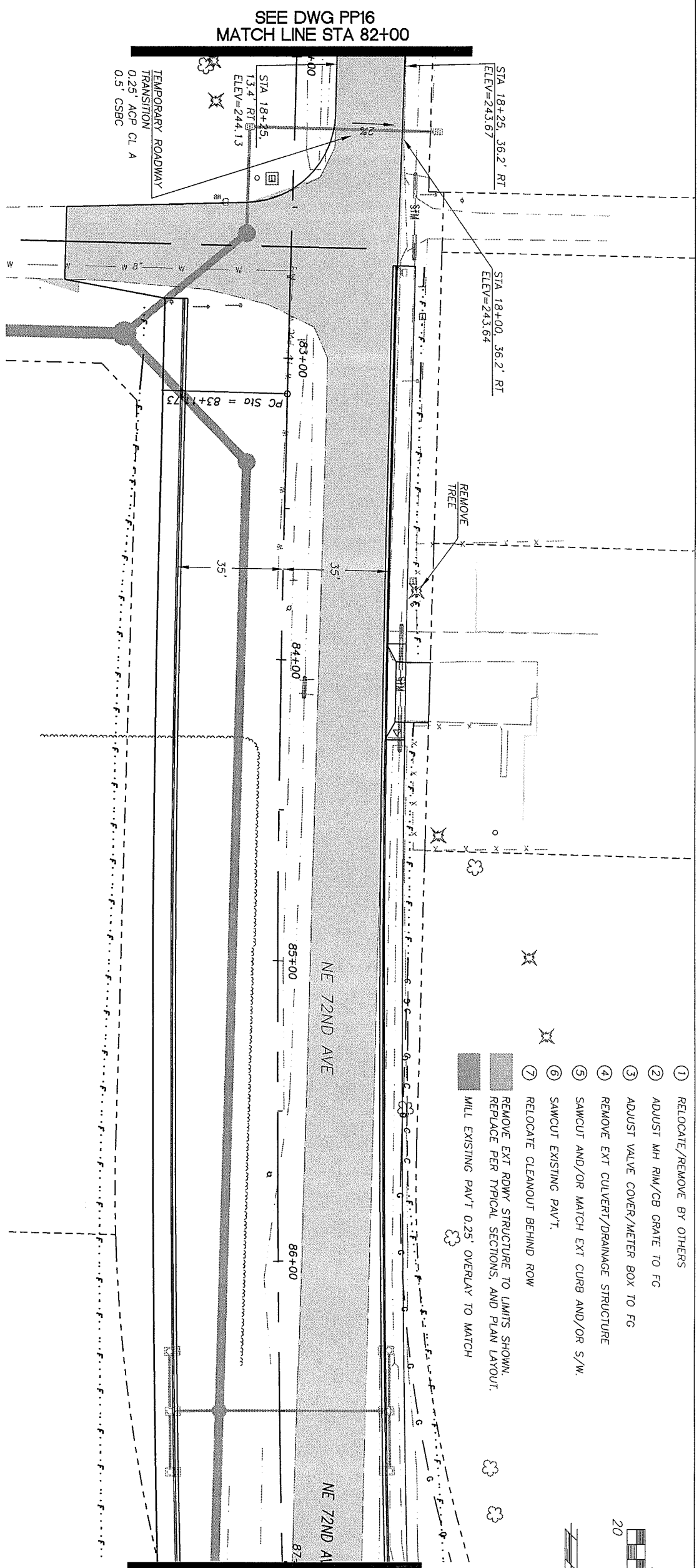

UNADJUSTED EARTHWORK QUANTITIES

EXCAVATION	2180
EMBANKMENT	60

proud past, promising future

CLARK COUNTY
WASHINGTON

DESIGN & ENGINEERING DIVISION
DESIGN SECTION

ST. JOHNS RD (NE 50TH TO NE 72ND)
PLAN & PROFILE (STA 82+00 TO 87+00)

MICHAEL M. EMRICK
STATE OF WASHINGTON
29030
REGISTERED
PROFESSIONAL ENGINEER
EXPIRES:MAY 26, 2005

CALL 48 HOURS BEFORE YOU DIG
1-800-553-4344
"It's the Law"
NORTHWEST UTILITIES NOTIFICATION CENTER

DESIGNED	MME
DRAWN	BAK
CRP	301422
HOR.	1"=20'
VERT.	1"=5'
DATE	3/18/02
DWG:	PP17
SHEET	OF

1. RELOCATE/REMOVE BY OTHERS
2. ADJUST MH RIM/CB GRATE TO FG
3. ADJUST VALVE COVER/METER BOX TO FG
4. REMOVE EXT CULVERT/DRAINAGE STRUCTURE
5. SAWCUT AND/OR MATCH EXT CURB AND/OR S/W.
6. SAWCUT EXISTING PAV'T.
7. RELOCATE CLEANOUT BEHIND ROW

REMOVE EXT RDWY STRUCTURE TO LIMITS SHOWN. REPLACE PER TYPICAL SECTIONS, AND PLAN LAYOUT.

MILL EXISTING PAV'T 0.25' OVERLAY TO MATCH

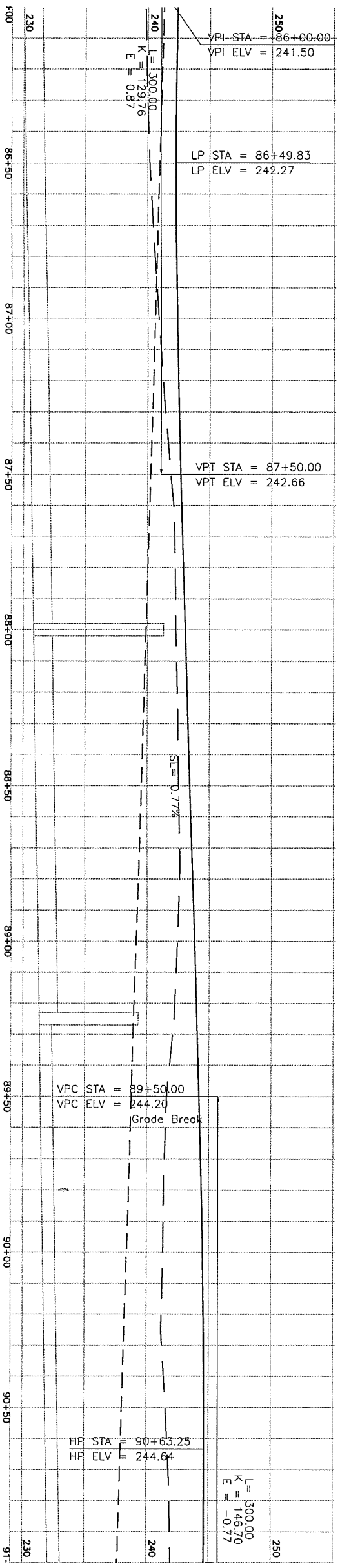

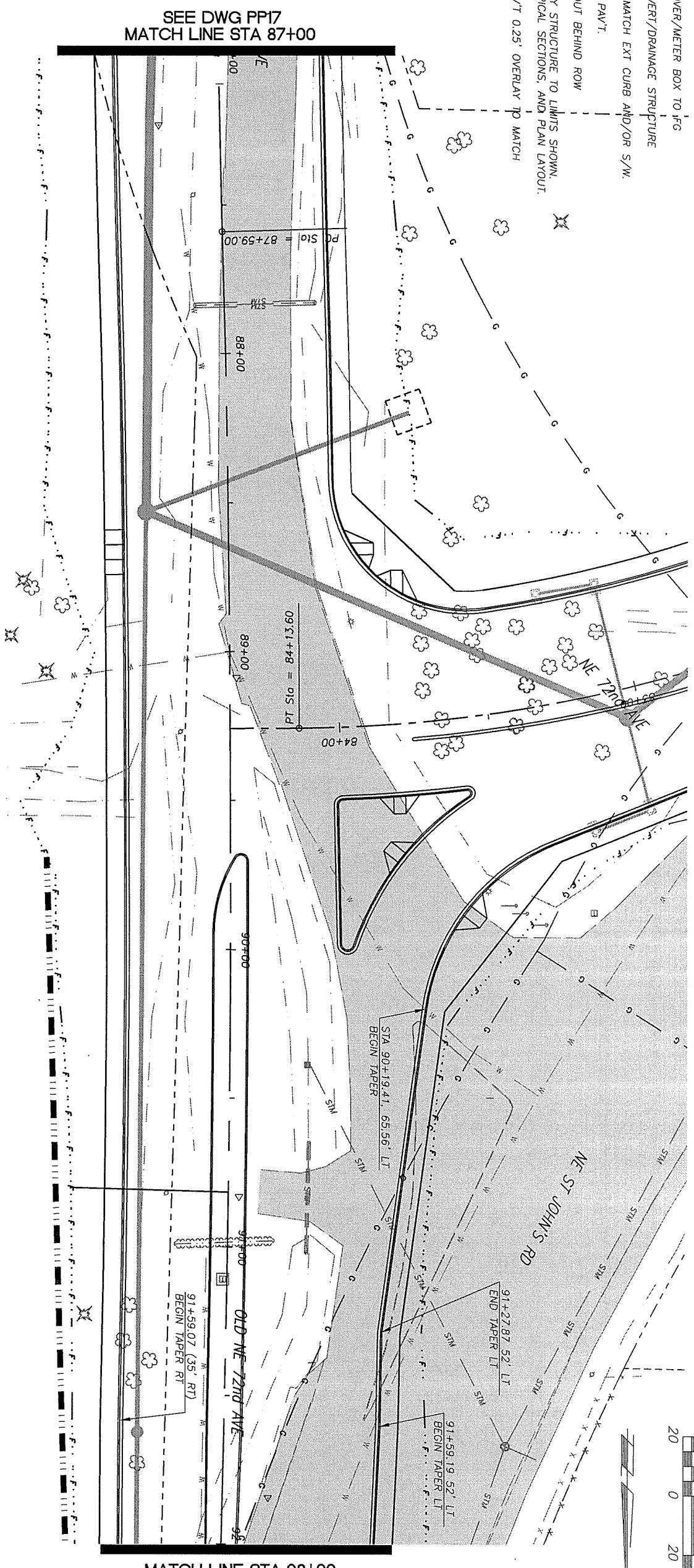

UNADJUSTED EARTHWORK QUANTITIES

EXCAVATION	2180
EMBANKMENT	60

CLARK COUNTY WASHINGTON
proud past, promising future

DESIGN & ENGINEERING DIVISION
DESIGN SECTION

ST. JOHNS RD (NE 50TH TO NE 72ND)
PLAN & PROFILE (STA 87+00 TO 92+00)

MICHAEL M. EMRICK
STATE OF WASHINGTON
29030
REGISTERED PROFESSIONAL ENGINEER
EXPIRES: MAY 26, 2005

CALL 48 HOURS BEFORE YOU DIG
1-800-553-4344
"It's the Law"
NORTHWEST UTILITIES NOTIFICATION CENTER

DESIGNED	MME
DRAWN	BAK
CRP	301422
HOR.	1"=20'
VERT.	1"=5'
DATE	3/18/02
DWG:	PP18
SHEET	OF

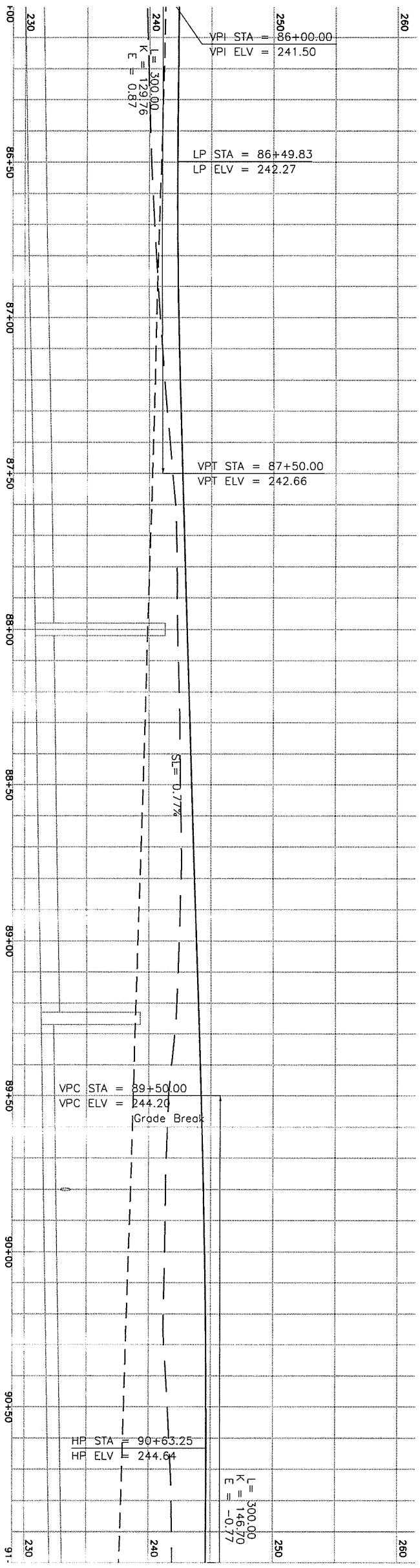

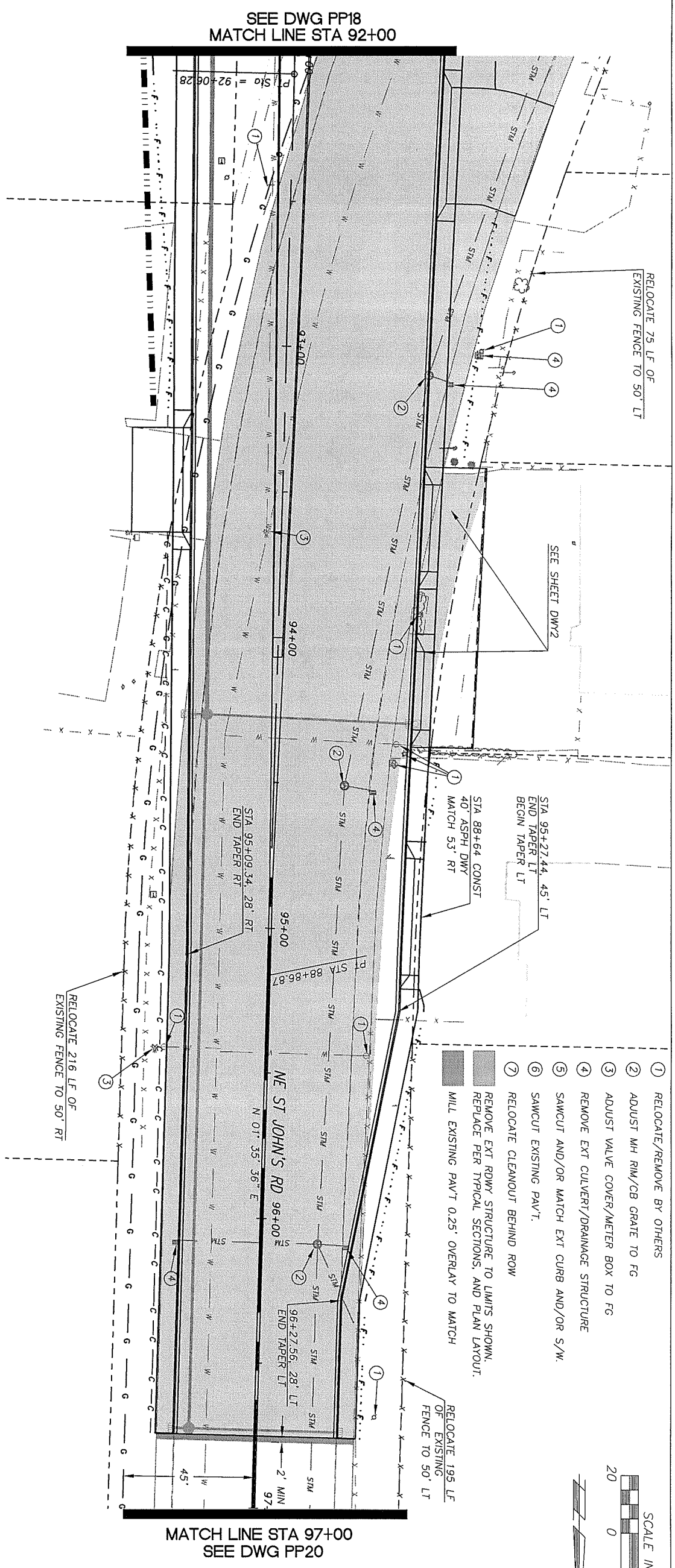

1. RELOCATE/REMOVE BY OTHERS
2. ADJUST MH RIM/CB GRATE TO FG
3. ADJUST VALVE COVER/METER BOX TO FG
4. REMOVE EXT CULVERT/DRAINAGE STRUCTURE
5. SAWCUT AND/OR MATCH EXT CURB AND/OR S/W.
6. SAWCUT EXISTING PAV'T.
7. RELOCATE CLEANOUT BEHIND ROW

REMOVE EXT RDWY STRUCTURE TO LIMITS SHOWN.
REPLACE PER TYPICAL SECTIONS, AND PLAN LAYOUT.

MILL EXISTING PAV'T 0.25' OVERLAY TO MATCH

SCALE IN FEET
20 0 20 40

UNADJUSTED EARTHWORK QUANTITIES

EXCAVATION	2180
EMBANKMENT	60

CLARK COUNTY
WASHINGTON
proud past, promising future

DESIGN & ENGINEERING DIVISION
DESIGN SECTION

ST. JOHNS RD (NE 50TH TO NE 72ND)
PLAN & PROFILE (STA 92+00 TO 97+00)

MICHAEL M. EMRICK
STATE OF WASHINGTON
29030
REGISTERED
PROFESSIONAL ENGINEER
EXPIRES: MAY 26, 2005

CALL 48 HOURS BEFORE YOU DIG
1-800-553-4344
"It's the Law"
NORTHWEST UTILITIES NOTIFICATION CENTER

DESIGNED	MME
DRAWN	BAK
CRP	301422
HOR.	1"=20'
VERT.	1"=5'
DATE	3/18/02
DWG:	PP19
SHEET	OF

N:\CIP\PROJECTS\301422-STJohns-50thTo72nd\DESIGN\DWGS\PP20.dwg, Layout1, 3/23/2004 5:45:42 PM, begleyk

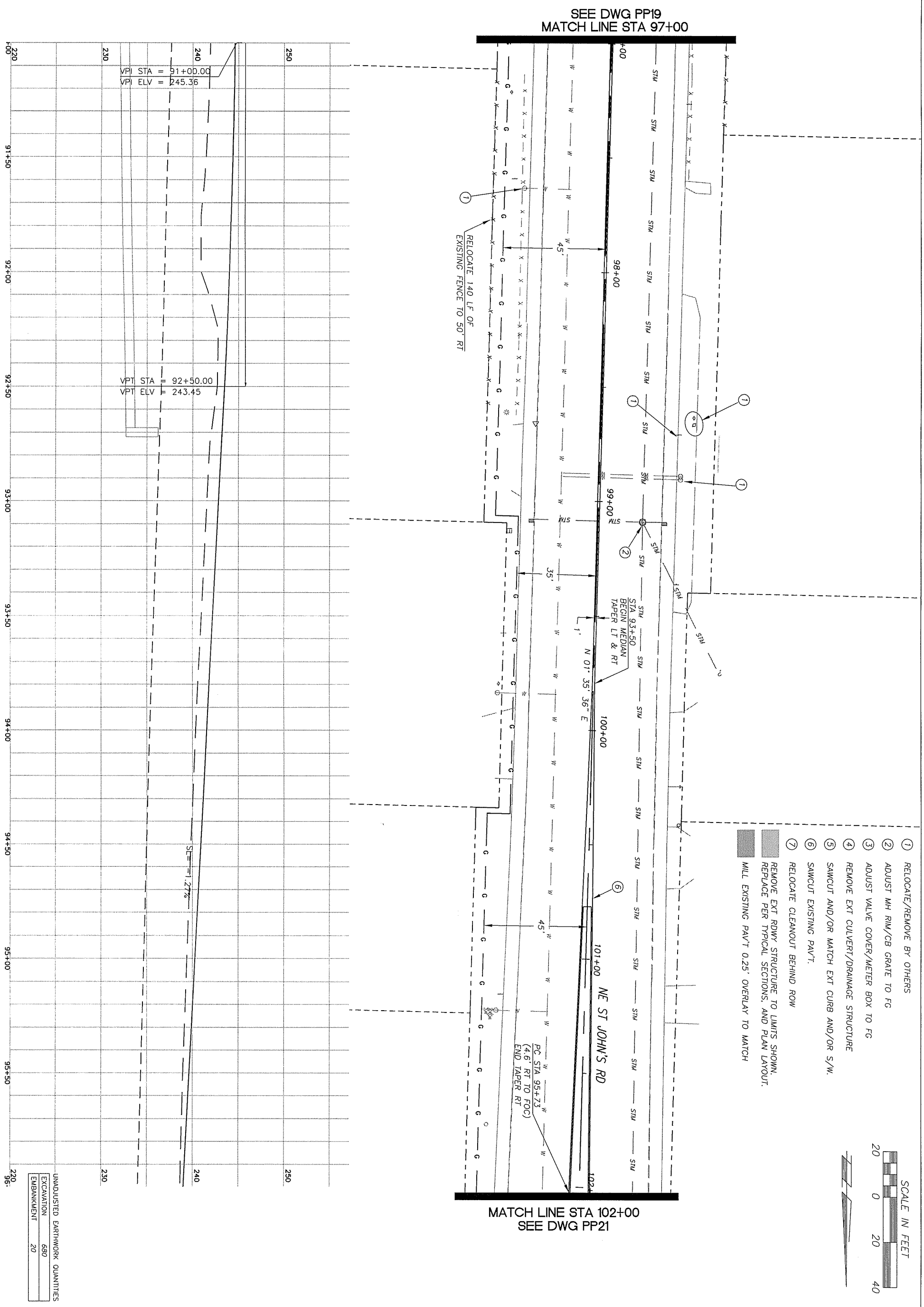

CLARK COUNTY WASHINGTON

proud past, promising future

DESIGN & ENGINEERING DIVISION
DESIGN SECTION

ST. JOHNS RD (NE 50TH TO NE 72ND)
PLAN & PROFILE (STA 97+00 TO 102+00)

MICHAEL M. EMRICK, STATE OF WASHINGTON, 29030, REGISTERED PROFESSIONAL ENGINEER
EXPIRES: MAY 26, 2005

CALL 48 HOURS BEFORE YOU DIG
1-800-553-4344
"It's the Law"
NORTHWEST UTILITIES NOTIFICATION CENTER

DESIGNED	MME
DRAWN	BAK
CRP	301422
HOR.	1"=20'
VERT.	1"=5'
DATE	3/18/02
DWG:	PP20
SHEET	OF

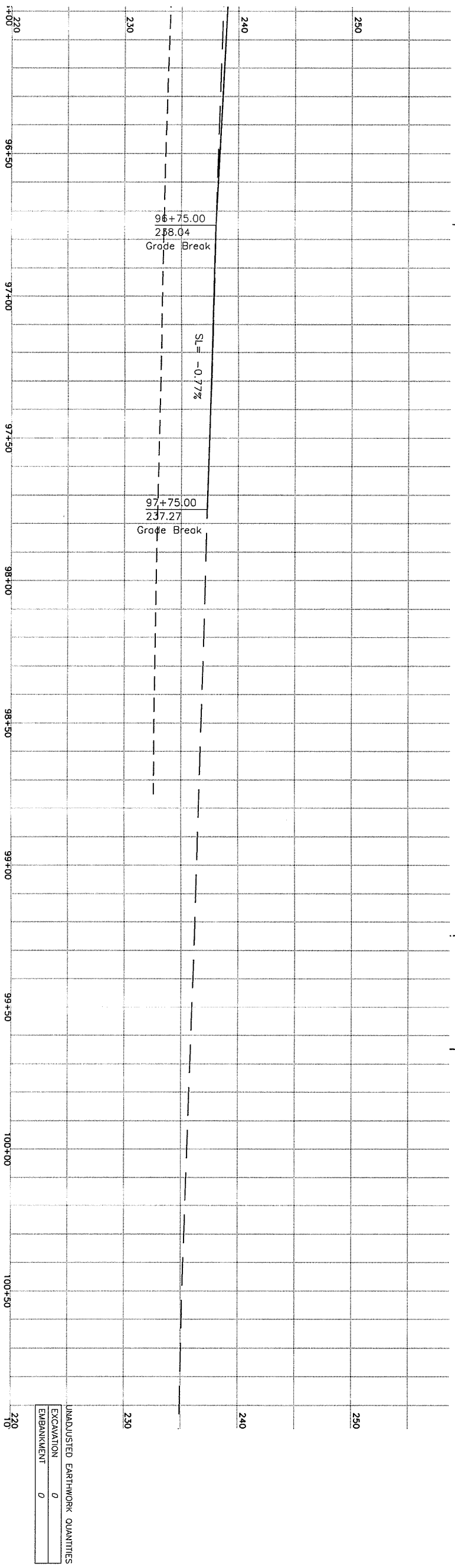

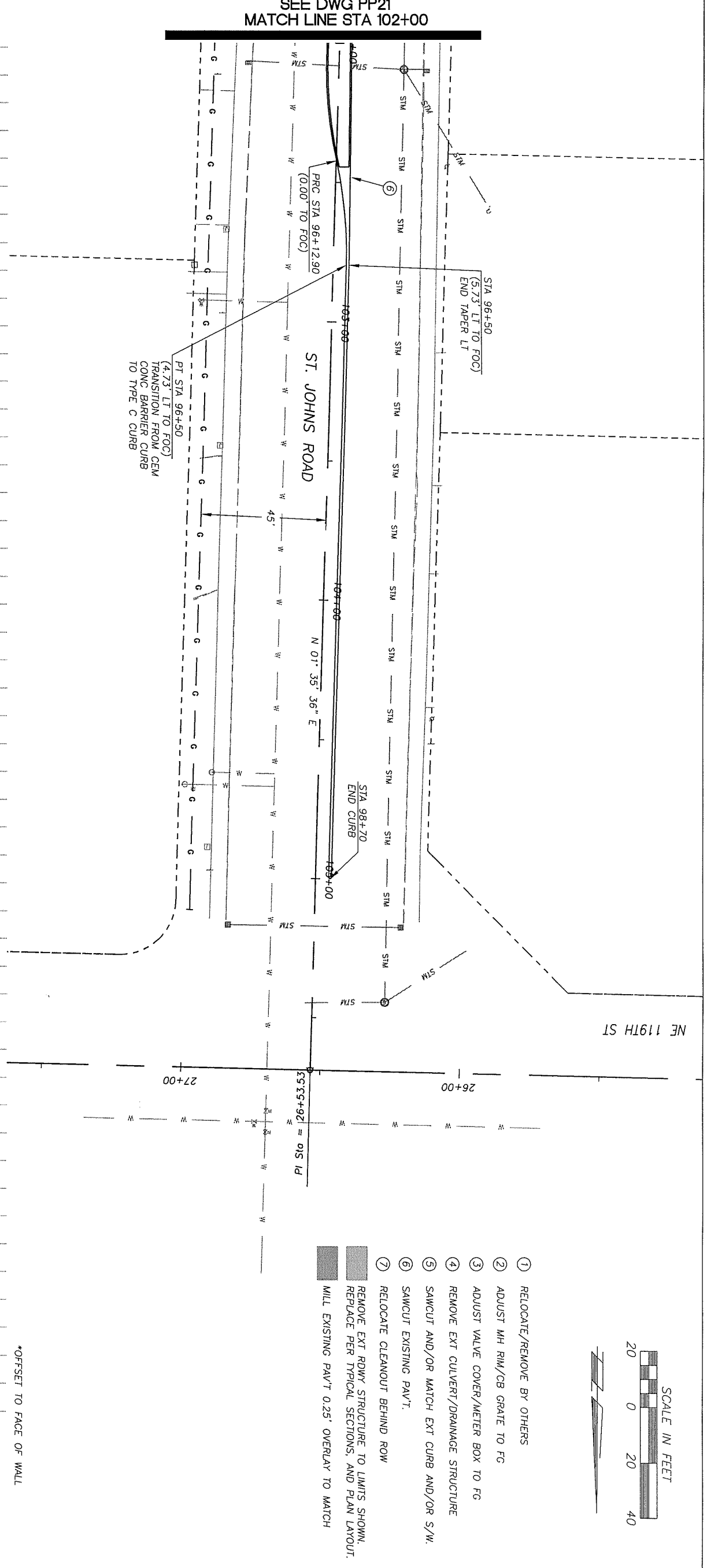

CLARK COUNTY
WASHINGTON
proud past, promising future

DESIGN & ENGINEERING DIVISION
DESIGN SECTION

ST. JOHNS RD (NE 50TH TO NE 72ND)
PLAN & PROFILE (STA 102+00 TO E.O.P.)

MICHAEL M. EMRICK
STATE OF WASHINGTON
29030
REGISTERED
PROFESSIONAL ENGINEER
EXPIRES: MAY 26, 2005

CALL 48 HOURS BEFORE YOU DIG
1-800-553-4344
"It's the Law"
NORTHWEST UTILITIES NOTIFICATION CENTER

DESIGNED	MME
DRAWN	BAK
CRP	301422
HOR.	1"=20'
VERT.	1"=5'
DATE	3/18/02
DWG:	PP21
SHEET	OF

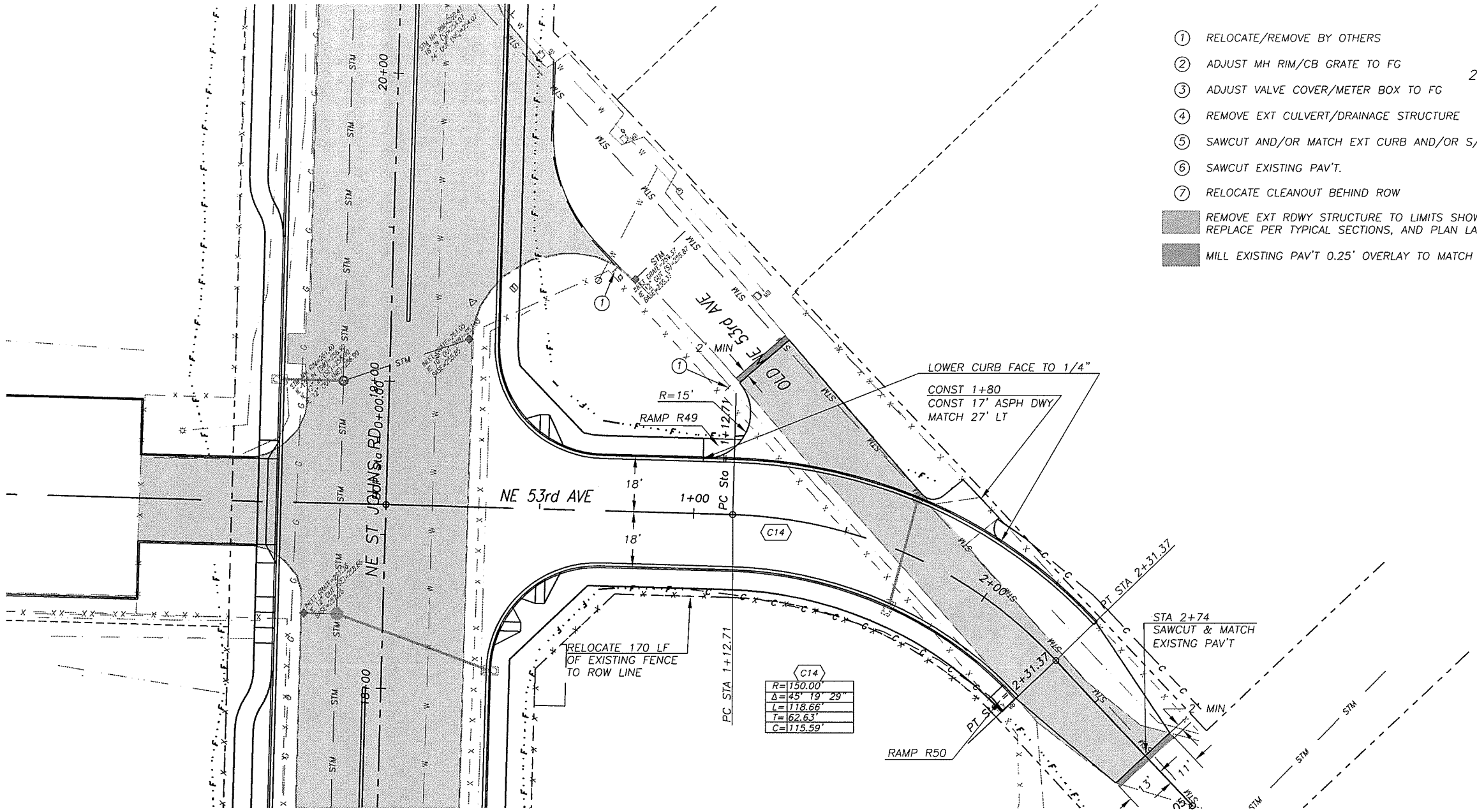

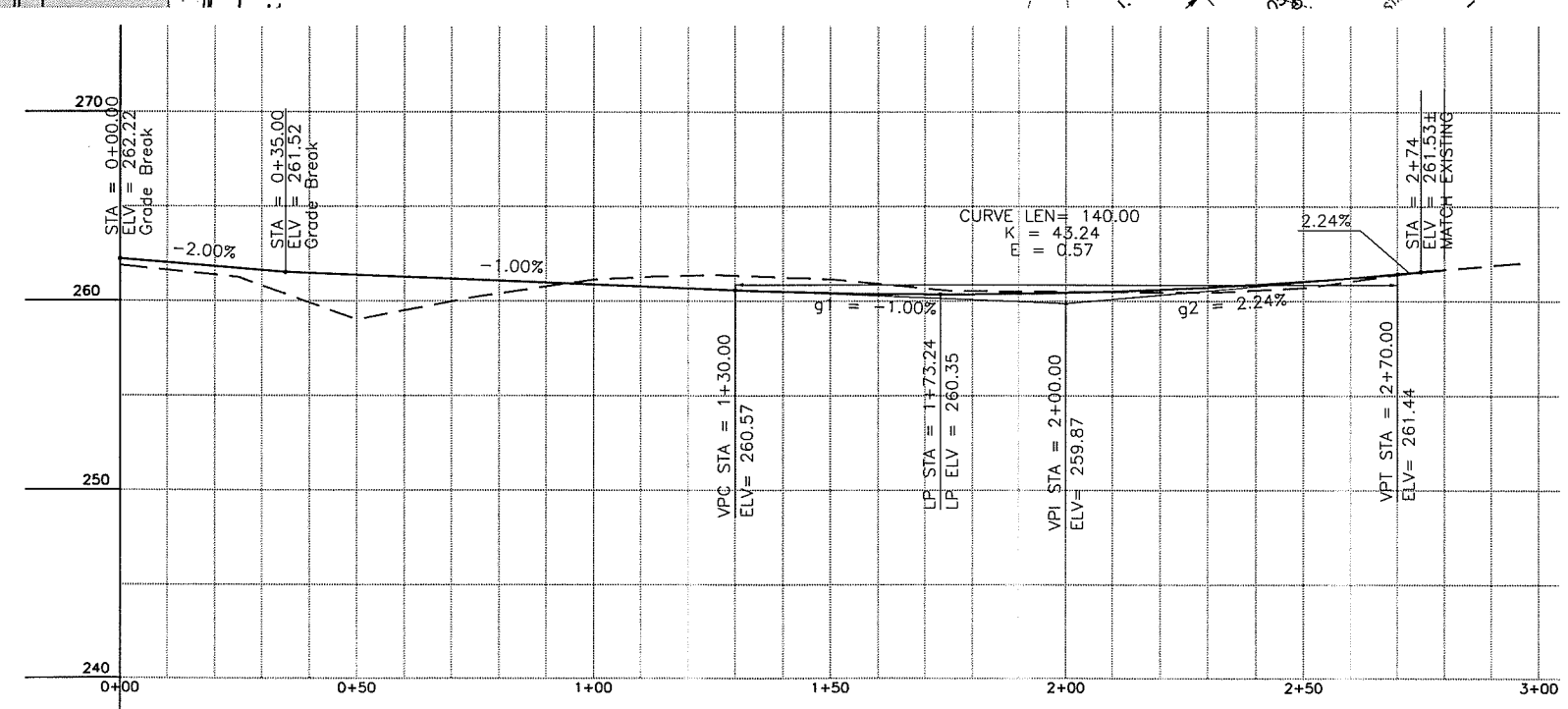

UNADJUSTED EARTHWORK QUANTITIES

EXCAVATION	370
EMBANKMENT	30

DESIGNED	MME
DRAWN	BAK
CRP	301422
HOR.	1"=20'
VERT.	1"=5'
DATE	3/18/02
DWG:	PP22
SHEET	OF

CALL 48 HOURS BEFORE YOU DIG 1-800-553-4344 "It's the Law" NORTHWEST UTILITIES NOTIFICATION CENTER

STATE OF WASHINGTON MICHAEL M. BARRICK 29030 REGISTERED PROFESSIONAL ENGINEER EXPIRES: MAY 26, 2005

DESIGN & ENGINEERING DIVISION
DESIGN SECTION

ST. JOHNS RD (NE 50TH TO NE 72ND)
PLAN & PROFILE (STA 0+00 TO 3+00)

proud past, promising future

CLARK COUNTY WASHINGTON

N:\CIP\PROJECTS\301422-STJohns-50thTo72nd\DESIGN\DWGS\PP22.dwg, Layout1, 3/18/2004 5:14:49 PM, begleyk

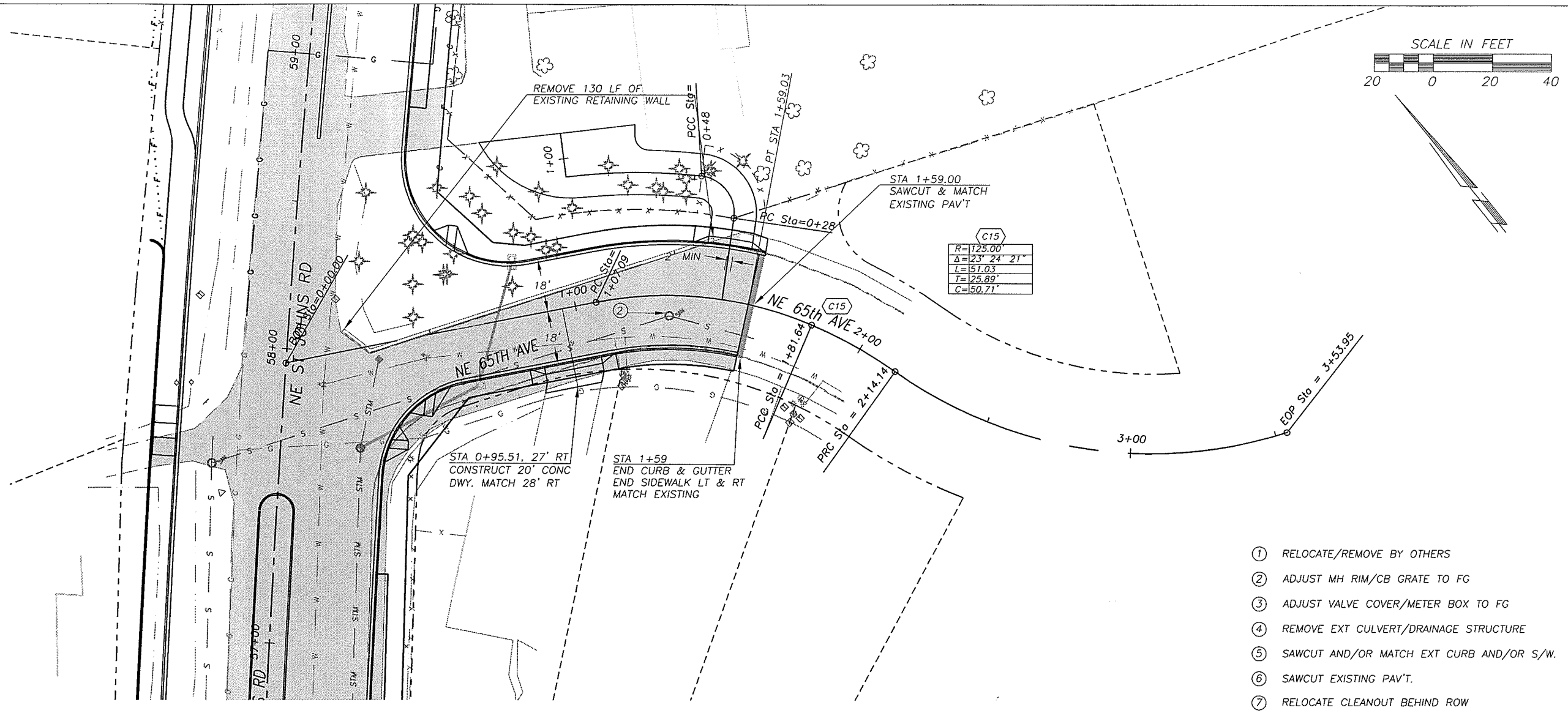

1. RELOCATE/REMOVE BY OTHERS
2. ADJUST MH RIM/CB GRATE TO FG
3. ADJUST VALVE COVER/METER BOX TO FG
4. REMOVE EXT CULVERT/DRAINAGE STRUCTURE
5. SAWCUT AND/OR MATCH EXT CURB AND/OR S/W.
6. SAWCUT EXISTING PAV'T.
7. RELOCATE CLEANOUT BEHIND ROW

REMOVE EXT RDWY STRUCTURE TO LIMITS SHOWN. REPLACE PER TYPICAL SECTIONS, AND PLAN LAYOUT.

MILL EXISTING PAV'T 0.25' OVERLAY TO MATCH

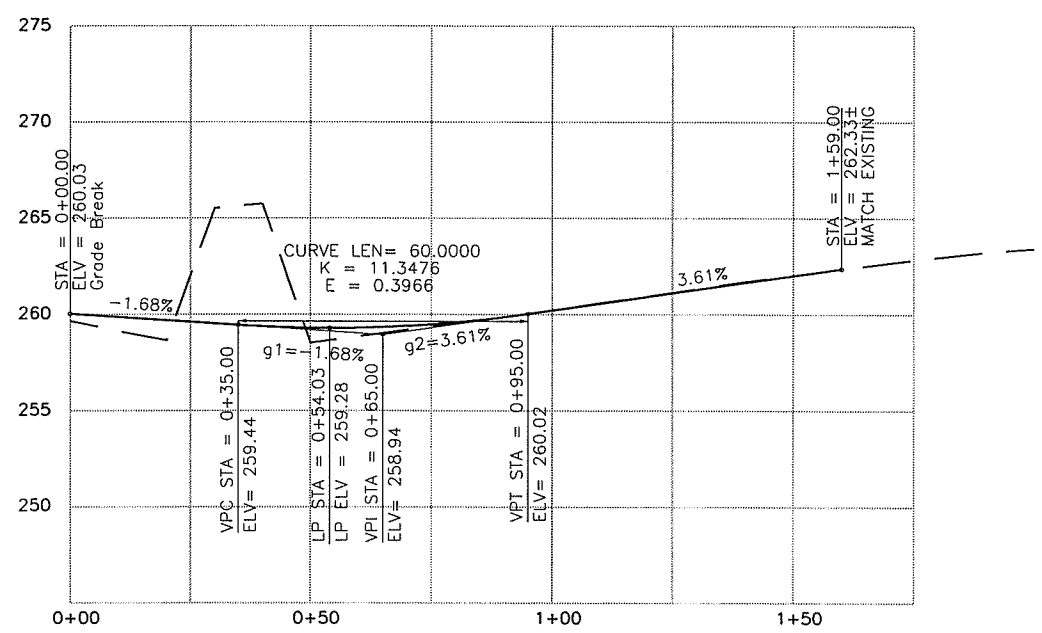

NE 65TH AVE

UNADJUSTED EARTHWORK QUANTITIES

EXCAVATION	680
EMBANKMENT	0

DESIGNED MME
DRAWN BAK
CRP 301422
HOR. 1"=20'
VERT. 1"=5'
DATE 3/18/02
DWG: PP23
SHEET OF

CALL 48 HOURS BEFORE YOU DIG
1-800-553-4344
"It's the Law"
NORTHWEST UTILITIES NOTIFICATION CENTER

MICHAEL M. ENRICK
STATE OF WASHINGTON
28030
REGISTERED PROFESSIONAL ENGINEER
EXPIRES: MAY 26, 2005

DESIGN & ENGINEERING DIVISION
DESIGN SECTION

ST. JOHNS RD (NE 50TH TO NE 72ND)
PLAN & PROFILE (STA 0+00 TO 3+00)

proud past, promising future
CLARK COUNTY WASHINGTON

N:\CIP\PROJECTS\301422-STJohns-50thTo72nd\DESIGN\DWGS\PP23.dwg, Layout1, 3/18/2004 5:15:32 PM, begleyk

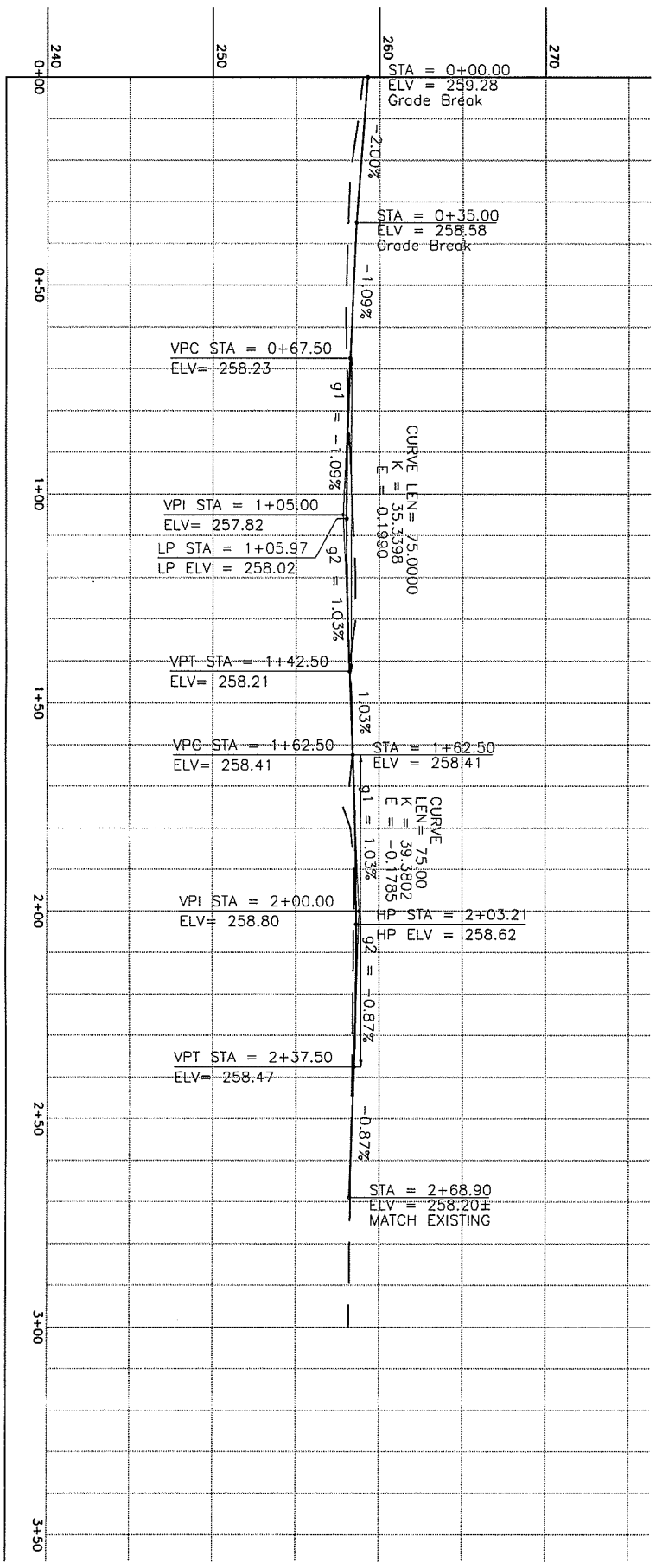

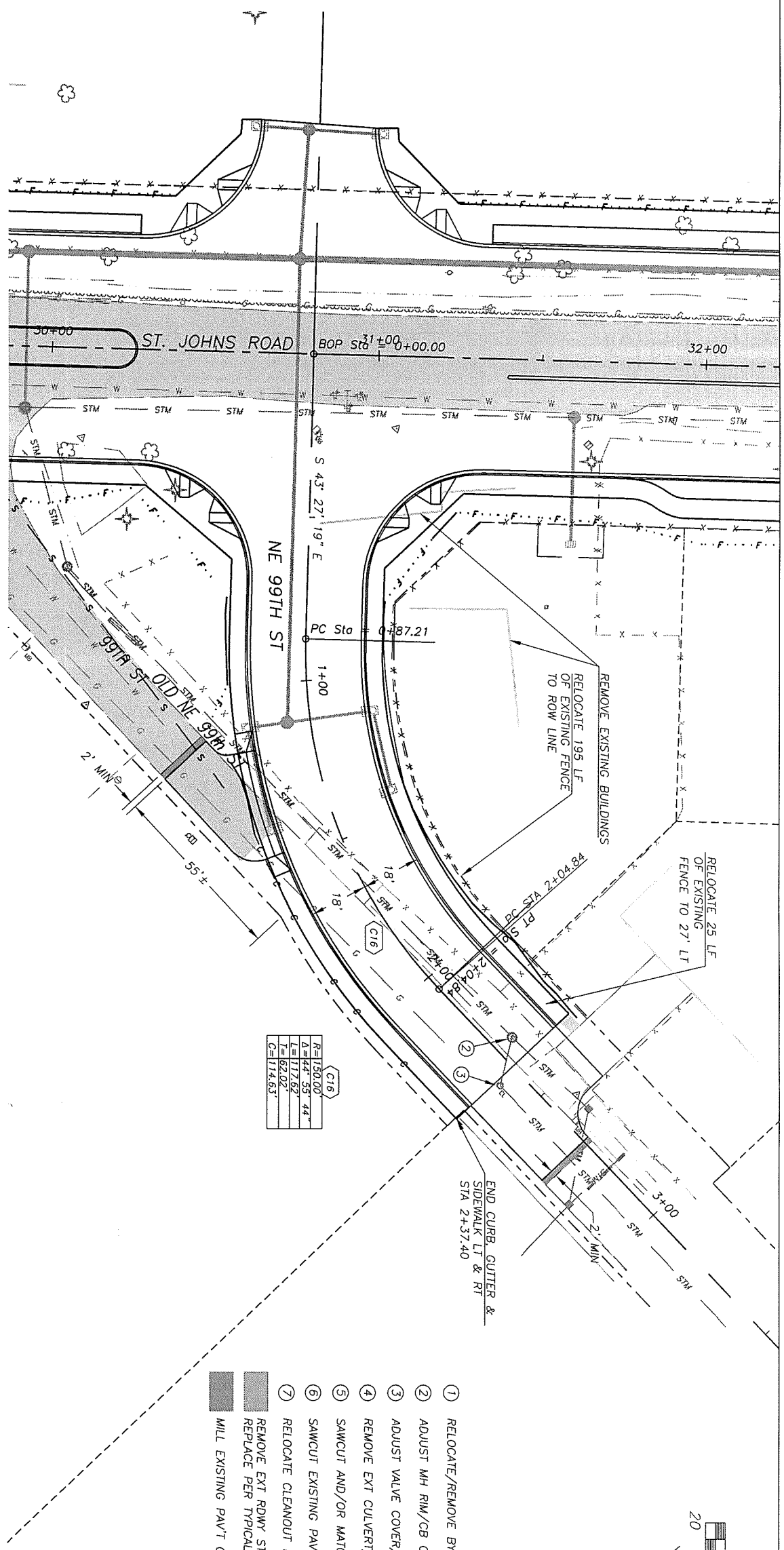

1. RELOCATE/REMOVE BY OTHERS
2. ADJUST MH RIM/CB GRATE TO FG
3. ADJUST VALVE COVER/METER BOX TO FG
4. REMOVE EXT CULVERT/DRAINAGE STRUCTURE
5. SAWCUT AND/OR MATCH EXT CURB AND/OR S/W.
6. SAWCUT EXISTING PAV'T.
7. RELOCATE CLEANOUT BEHIND ROW

REMOVE EXT RDWY STRUCTURE TO LIMITS SHOWN. REPLACE PER TYPICAL SECTIONS, AND PLAN LAYOUT.

MILL EXISTING PAV'T 0.25' OVERLAY TO MATCH

UNADJUSTED EARTHWORK QUANTITIES

EXCAVATION	300
EMBANKMENT	20

proud past, promising future

CLARK COUNTY
WASHINGTON

DESIGN & ENGINEERING DIVISION
DESIGN SECTION

ST. JOHNS RD (NE 50TH TO NE 72ND)
PLAN & PROFILE (STA 0+00 TO 3+00)

MICHAEL M. EMRICK
STATE OF WASHINGTON
29030
REGISTERED
PROFESSIONAL ENGINEER
EXPIRES: MAY 26, 2005

CALL 48 HOURS BEFORE YOU DIG
1-800-553-4344
"It's the Law"
NORTHWEST UTILITIES NOTIFICATION CENTER

DESIGNED	MME
DRAWN	BAK
CRP	301422
HOR.	1"=20'
VERT.	1"=5'
DATE	3/18/02
DWG:	PP24
SHEET	OF

N:\CIP\PROJECTS\301422-STJohns-50thTo72nd\DESIGN\DWGS\PP25-26.dwg, PP25, 3/23/2004 5:47:02 PM, begleyk

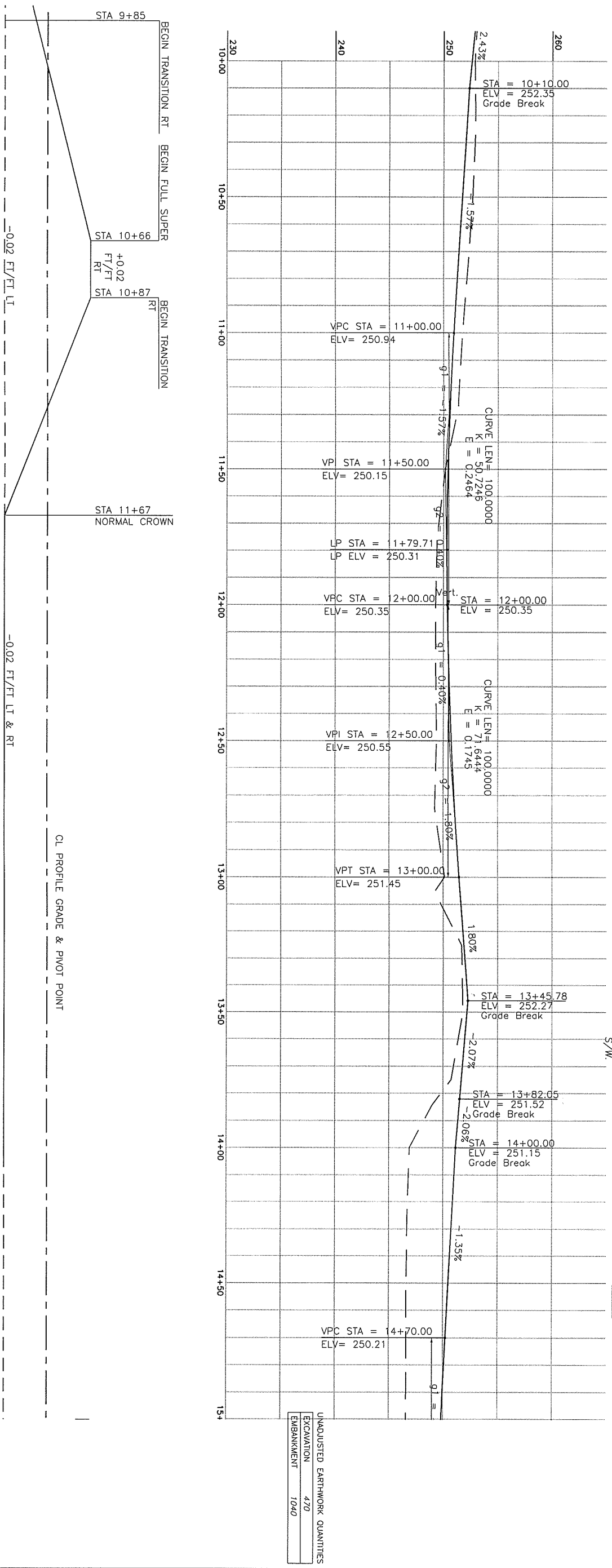

UNADJUSTED EARTHWORK QUANTITIES
EXCAVATION 470
EMBANKMENT 1040

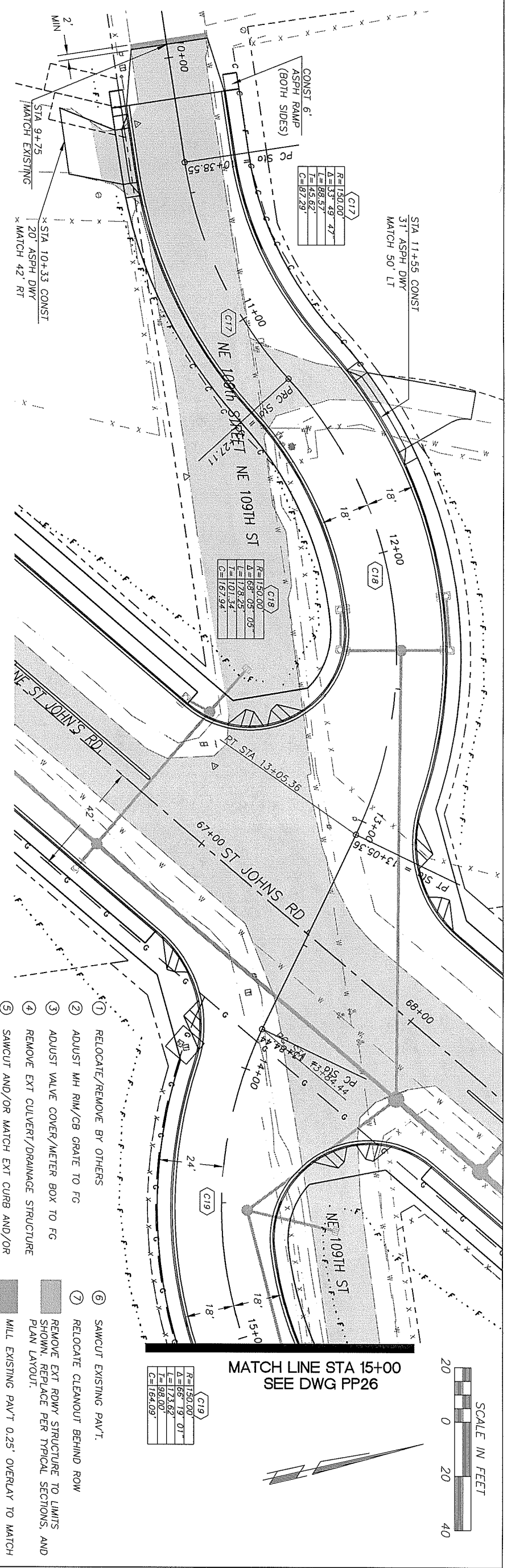

1. RELOCATE/REMOVE BY OTHERS
2. ADJUST MH RIM/CB GRATE TO FG
3. ADJUST VALVE COVER/METER BOX TO FG
4. REMOVE EXT CULVERT/DRAINAGE STRUCTURE
5. SAWCUT AND/OR MATCH EXT CURB AND/OR S/W.
6. SAWCUT EXISTING PAV'T.
7. RELOCATE CLEANOUT BEHIND ROW

REMOVE EXT RDWY STRUCTURE TO LIMITS SHOWN. REPLACE PER TYPICAL SECTIONS, AND PLAN LAYOUT.

MILL EXISTING PAV'T 0.25' OVERLAY TO MATCH

CLARK COUNTY WASHINGTON
proud past, promising future

DESIGN & ENGINEERING DIVISION
DESIGN SECTION

ST. JOHNS RD (NE 50TH TO NE 72ND)
PLAN & PROFILE (STA 10+00 TO 15+00)

MICHAEL M. EMRICK, STATE OF WASHINGTON, 29030, REGISTERED PROFESSIONAL ENGINEER
EXPIRES: MAY 26, 2005

CALL 48 HOURS BEFORE YOU DIG
1-800-553-4344
"It's the Law"
NORTHWEST UTILITIES NOTIFICATION CENTER

DESIGNED	MME
DRAWN	BAK
CRP	301422
HOR.	1"=20'
VERT.	1"=5'
DATE	3/18/02
DWG:	PP25
SHEET	OF

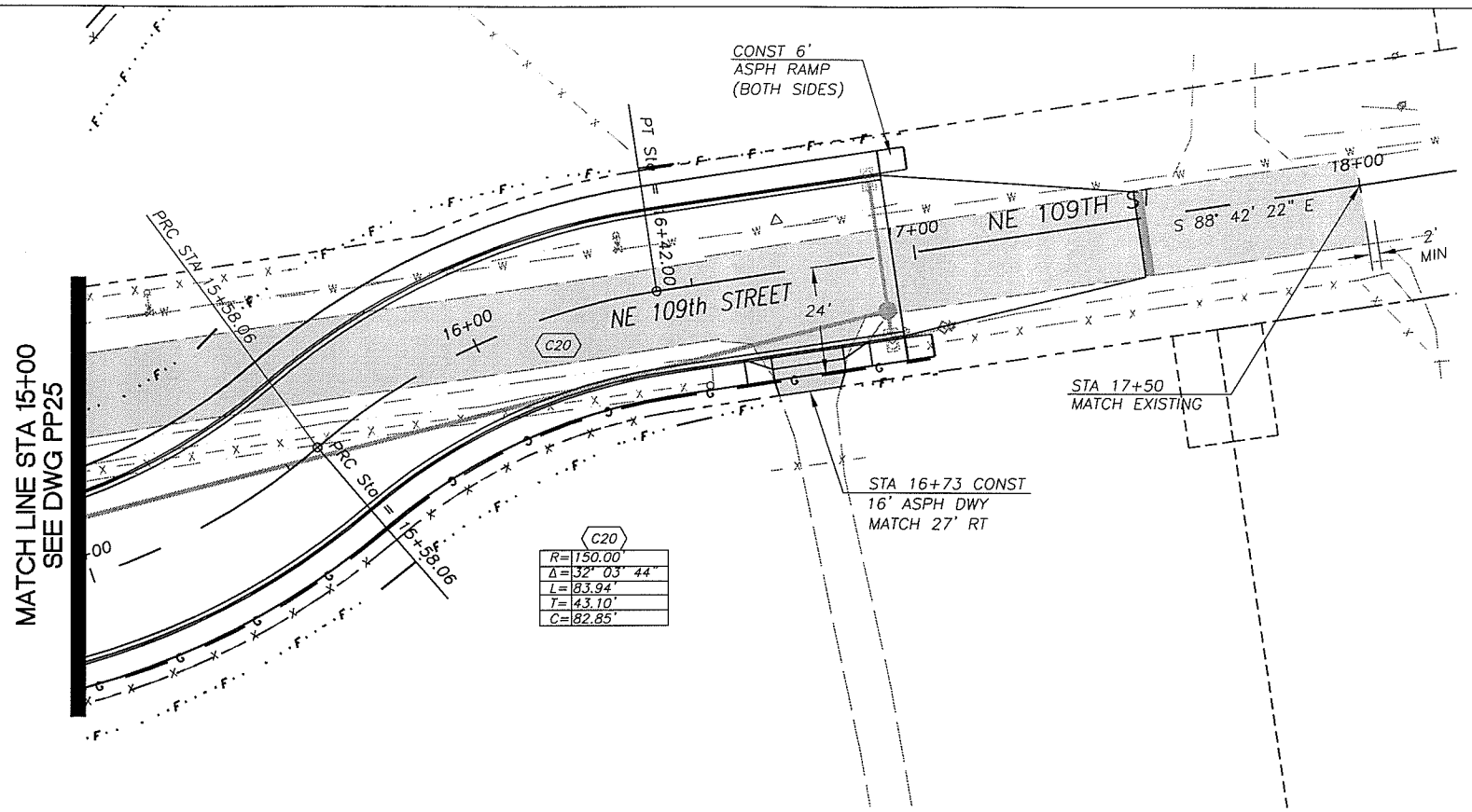

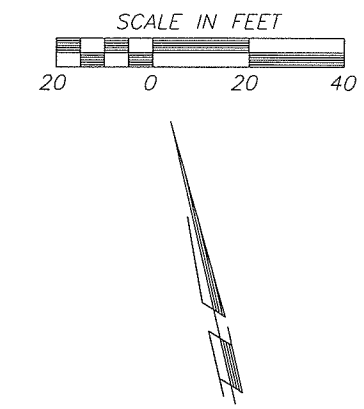

1. RELOCATE/REMOVE BY OTHERS
2. ADJUST MH RIM/CB GRATE TO FG
3. ADJUST VALVE COVER/METER BOX TO FG
4. REMOVE EXT CULVERT/DRAINAGE STRUCTURE
5. SAWCUT AND/OR MATCH EXT CURB AND/OR S/W.
6. SAWCUT EXISTING PAV'T.
7. RELOCATE CLEANOUT BEHIND ROW

REMOVE EXT RDWY STRUCTURE TO LIMITS SHOWN. REPLACE PER TYPICAL SECTIONS, AND PLAN LAYOUT.

MILL EXISTING PAV'T 0.25' OVERLAY TO MATCH

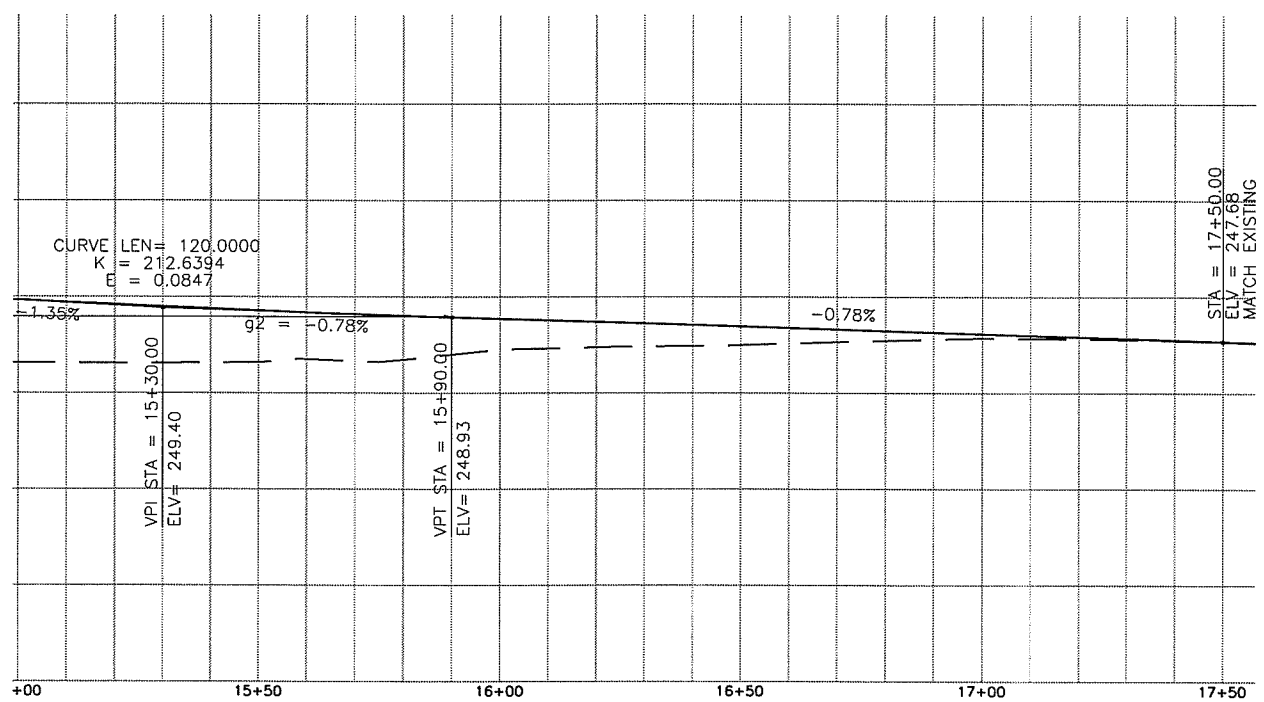

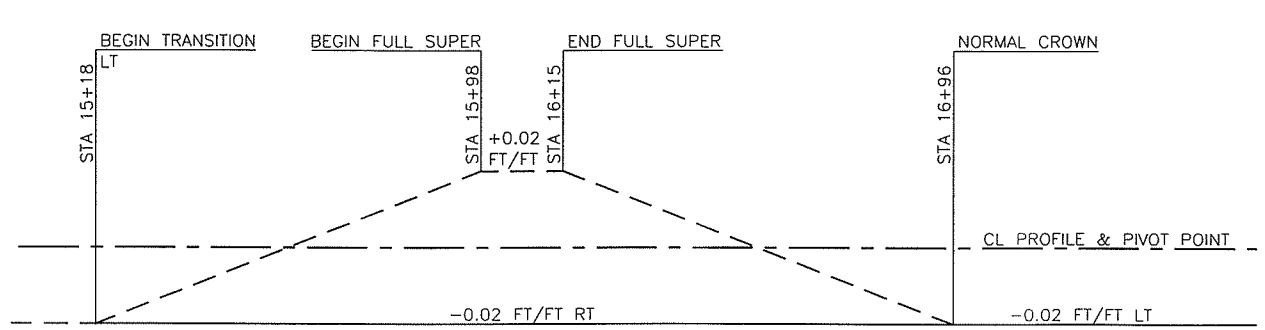

UNADJUSTED EARTHWORK QUANTITIES

EXCAVATION	100
EMBANKMENT	520

DESIGNED MME
DRAWN BAK
CRP 301422
HOR. 1"=20'
VERT. 1"=5'
DATE 3/18/02
DWG: PP26
SHEET OF

CALL 48 HOURS BEFORE YOU DIG
1-800-553-4344
"It's the Law"
NORTHWEST UTILITIES NOTIFICATION CENTER

MICHAEL M. ENRICK
STATE OF WASHINGTON
28030
REGISTERED PROFESSIONAL ENGINEER
EXPIRES MAY 26, 2005

DESIGN & ENGINEERING DIVISION
DESIGN SECTION

ST.JOHNS RD (NE 50TH TO NE 72ND)
PLAN & PROFILE (STA 15+00 TO 18+00)

proud past, promising future
CLARK COUNTY
WASHINGTON

N:\CIP\PROJECTS\301422-STJohns-50thTo72nd\DESIGN\DWGS\PP25-26.dwg, PP26, 3/18/2004 5:19:03 PM, begleyk

N:\CIP\PROJECTS\301422-STJohns-50thTo72nd\DESIGN\DWGS\DWY1.dwg, Layout1, 3/18/2004 5:20:39 PM, begleyk

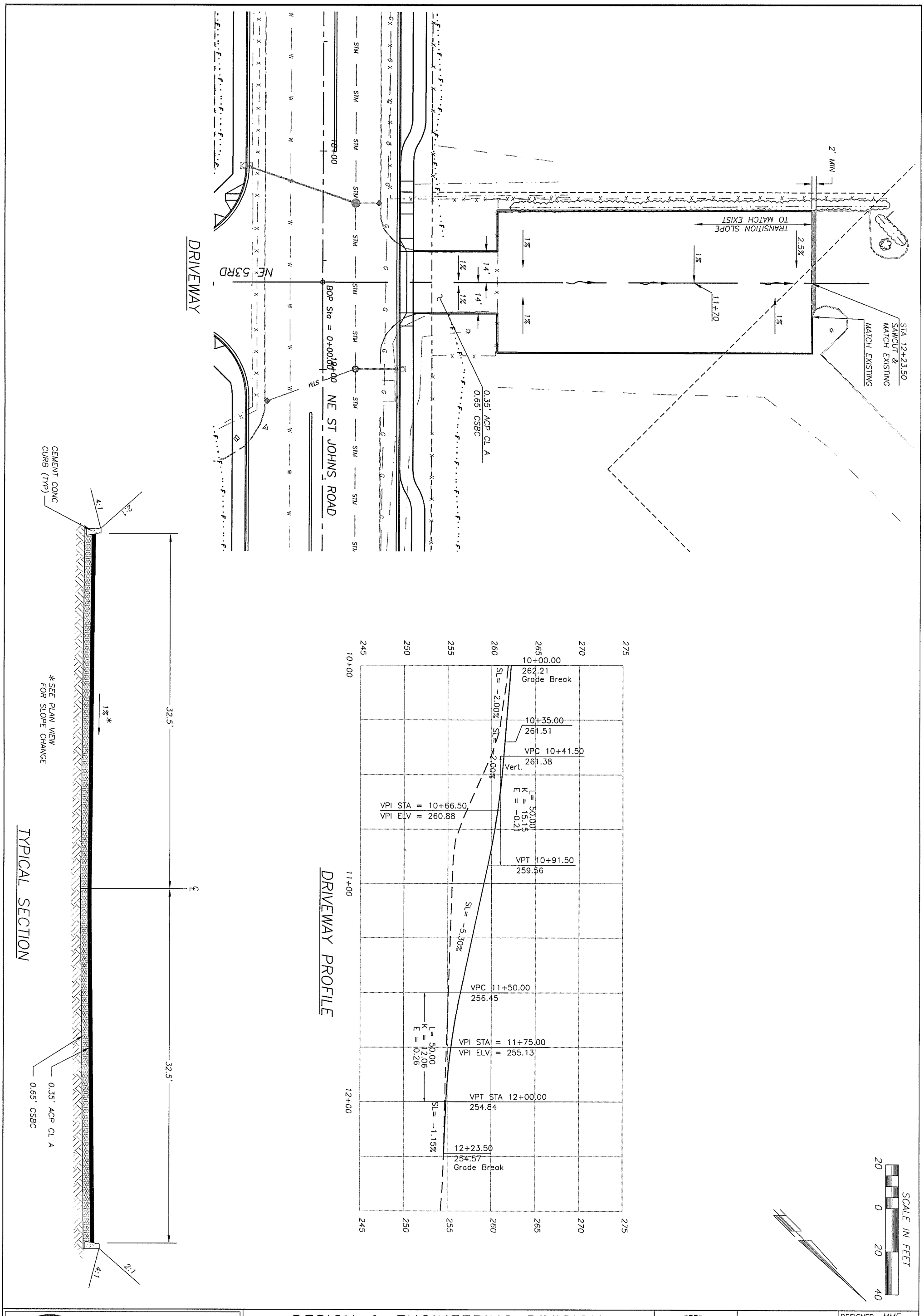

CLARK COUNTY WASHINGTON

proud past, promising future

DESIGN & ENGINEERING DIVISION
DESIGN SECTION

ST. JOHNS RD (NE 50TH TO NE 72ND)
DRIVEWAY PLANS

MICHAEL M. EMRICK
STATE OF WASHINGTON
29030
REGISTERED PROFESSIONAL ENGINEER
EXPIRES: MAY 26, 2005

CALL 48 HOURS BEFORE YOU DIG
1-800-553-4344
"It's the Law"
NORTHWEST UTILITIES NOTIFICATION CENTER

DESIGNED	MME
DRAWN	BAK
CRP	301422
HOR.	1"=20'
VERT.	NA
DATE	3/18/02
DWG:	DWY1
SHEET	OF

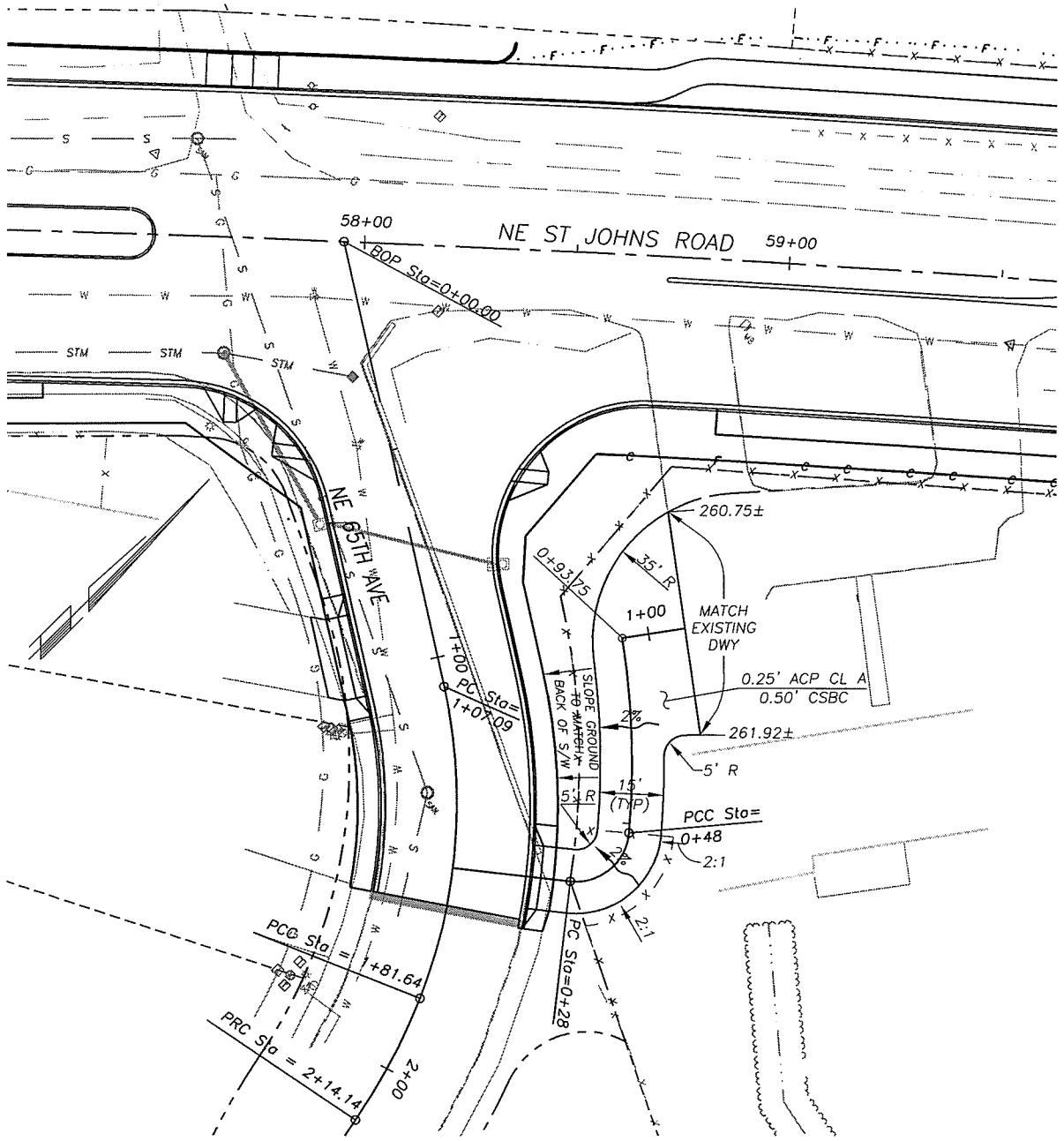

HAMILTON DRIVEWAY

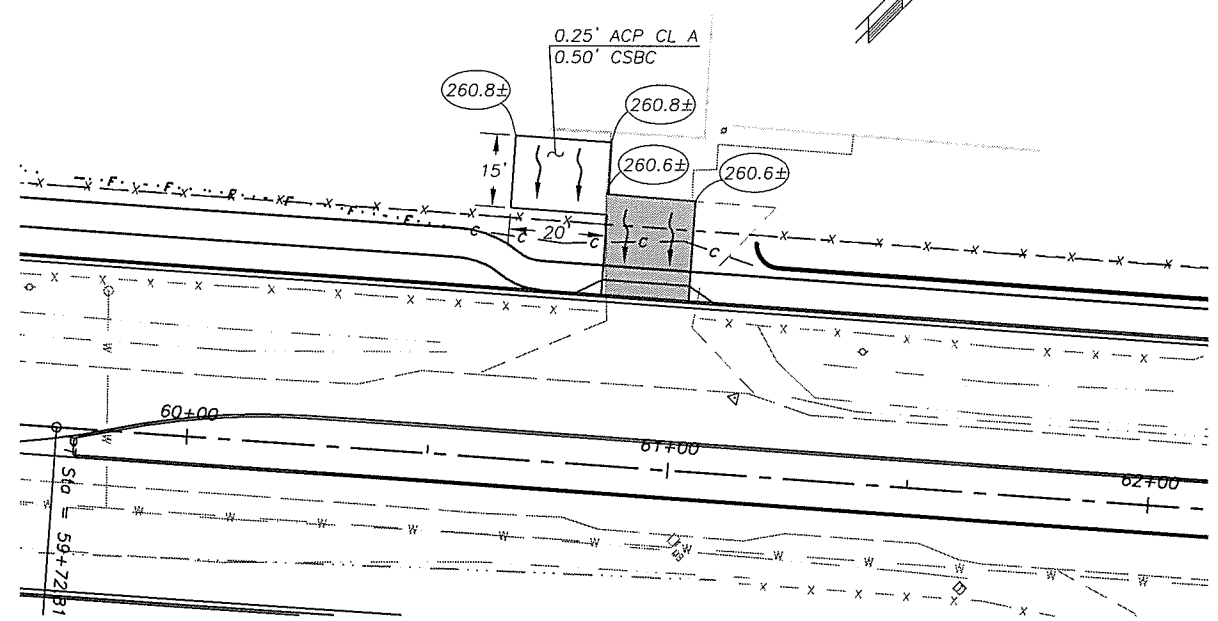

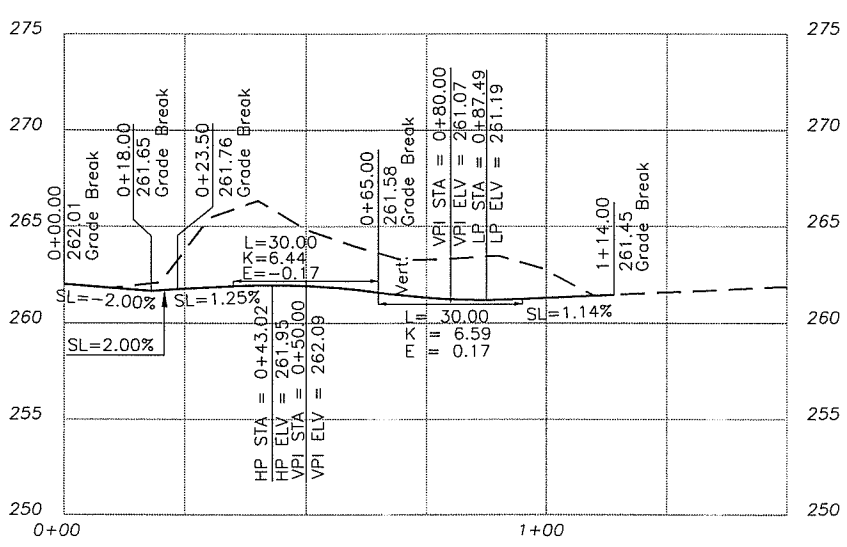

HAMILTON DRIVEWAY PROFILE

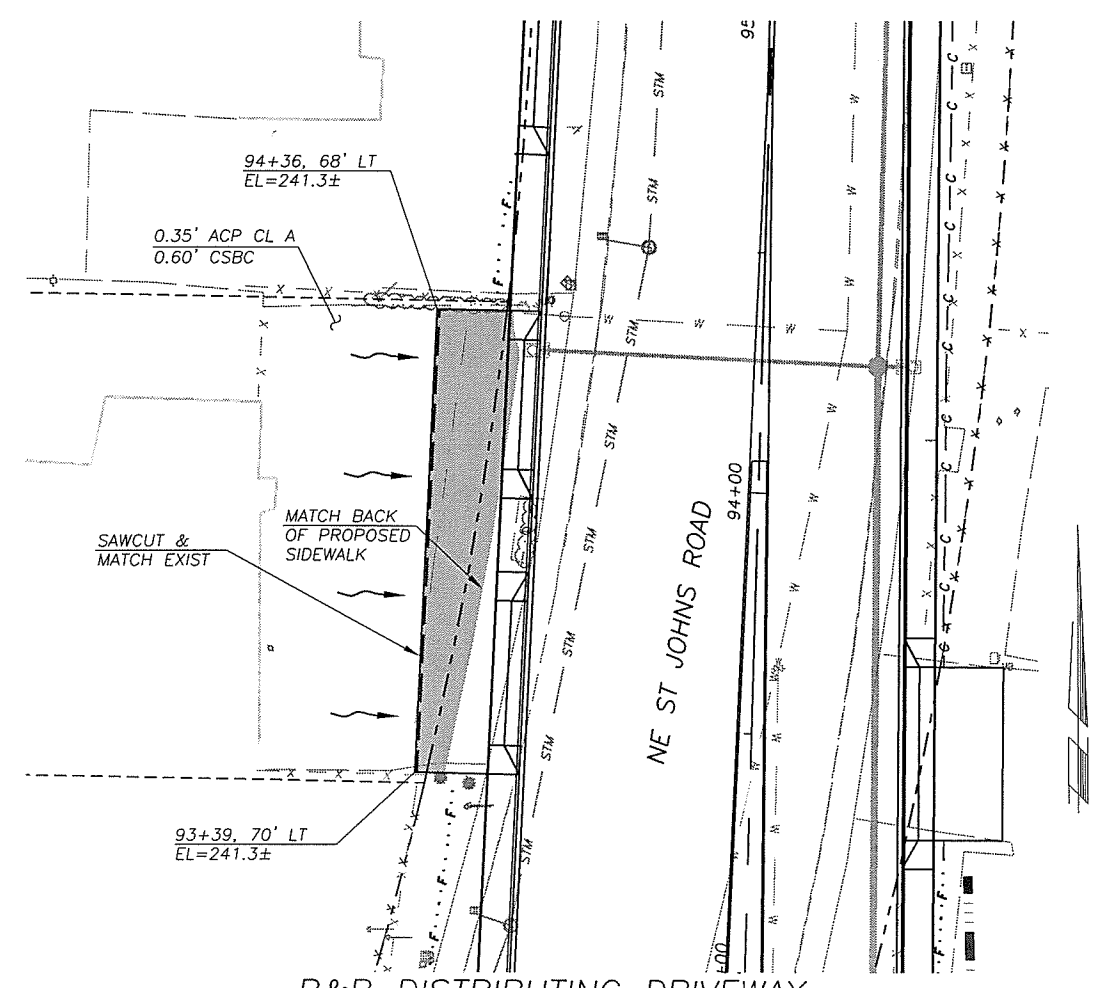

B&B DISTRIBUTING DRIVEWAY

SCALE IN FEET

20 0 20 40

DESIGNED	MME
DRAWN	BAK
CRP	301422
HOR.	1"=20'
VERT.	NA
DATE	3/18/02
DWG:	DWY2
SHEET	OF

CALL 48 HOURS BEFORE YOU DIG 1-800-553-4344 "It's the Law" NORTHWEST UTILITIES NOTIFICATION CENTER

MICHAEL M. BORGICA STATE OF WASHINGTON 26030 REGISTERED PROFESSIONAL ENGINEER

EXPIRES: MAY 26, 2005

DESIGN & ENGINEERING DIVISION
DESIGN SECTION

ST. JOHNS RD (NE 50TH TO NE 72ND)
DRIVEWAY PLANS

proud past, promising future

CLARK COUNTY WASHINGTON

N:\CIP\PROJECTS\301422-STJohns-50thTo72nd\DESIGN\DWGS\DWY2.dwg, 2, 3/18/2004 5:26:14 PM, begleyk

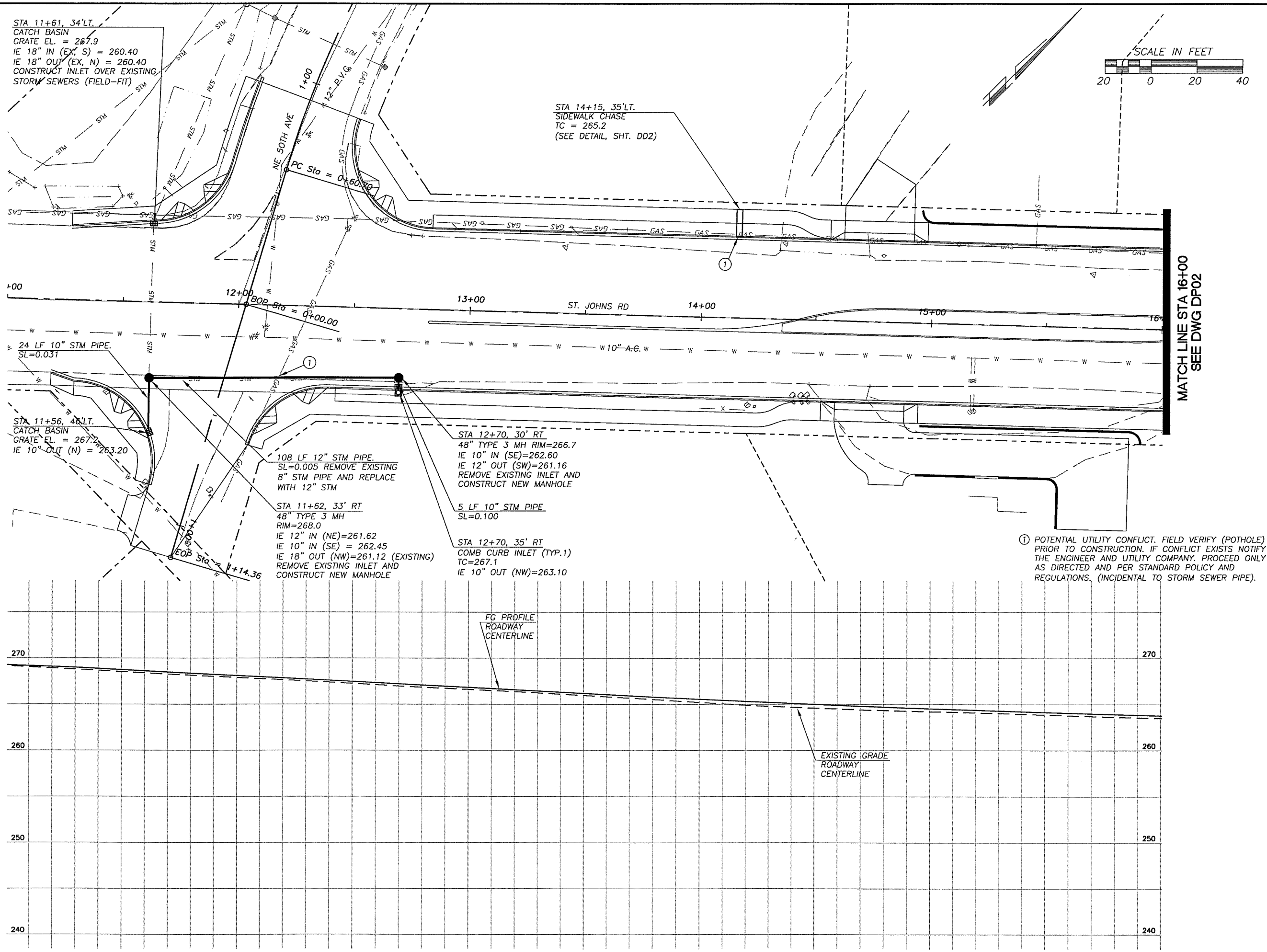

DESIGNED	MME/JM
DRAWN	BAK
CRP	301422
HOR.	1"=20'
VERT.	1"=5'
DATE	3/31/04
DWG:	DP01
SHEET	OF

CALL 48 HOURS BEFORE YOU DIG
1-800-553-4344
"It's the Law"
NORTHWEST UTILITIES NOTIFICATION CENTER

STATE OF WASHINGTON
MICHAEL E. MCCLELLAND
31148
REGISTERED PROFESSIONAL ENGINEER
EXPIRES: JULY 7, 2003

DESIGN & ENGINEERING DIVISION
DESIGN SECTION

ST. JOHNS RD (NE 50TH TO NE 72ND)
DRAINAGE PLAN (B.O.P. TO STA 16+00)

proud past, promising future
CLARK COUNTY
WASHINGTON

N:\CIP\PROJECTS\301422-STJohns-50thTo72nd\DESIGN\DWGS\dp01.dwg, 3/24/2004 10:53:22 AM, kerfinr

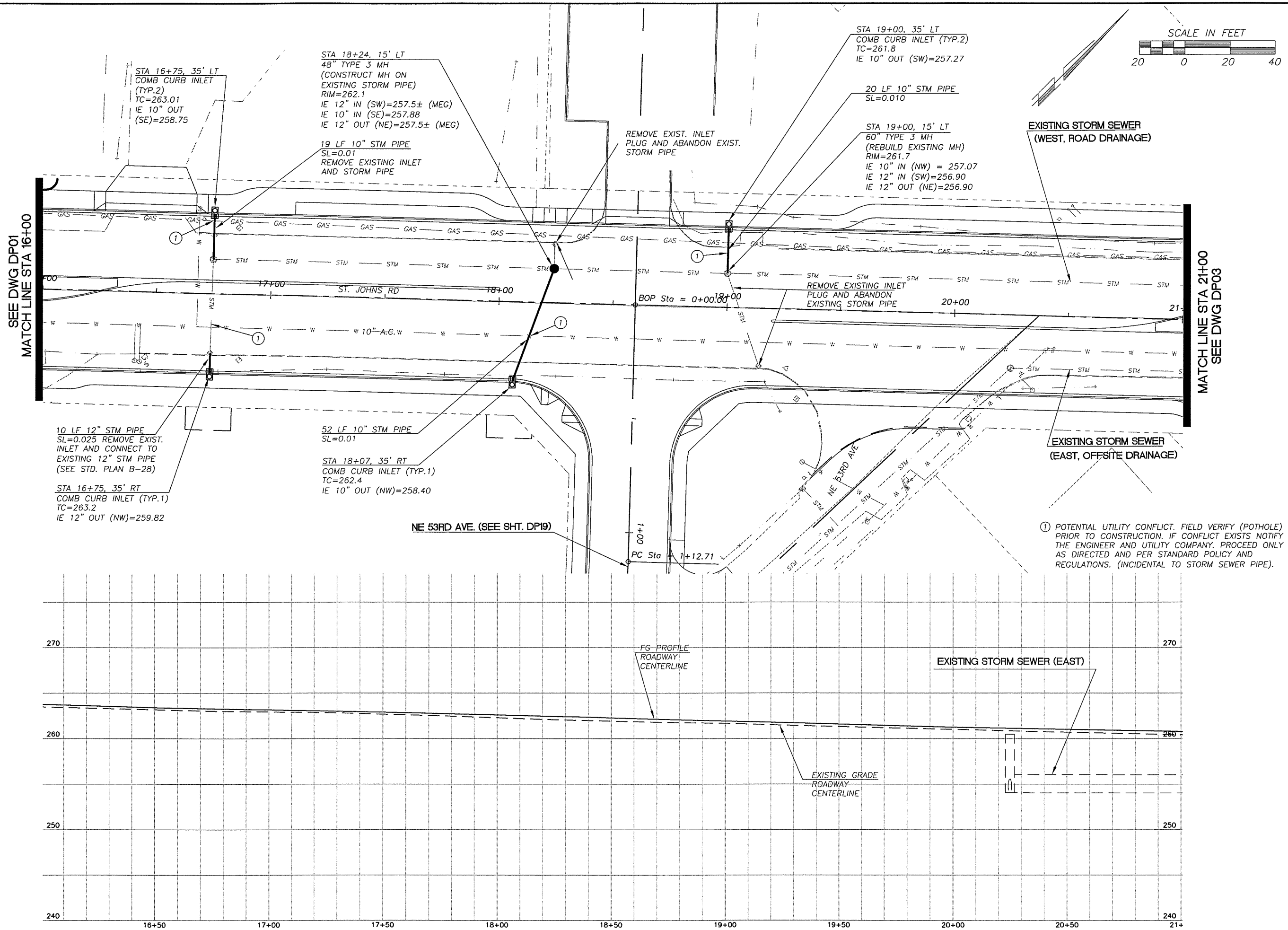

DESIGNED MME/JM
DRAWN BAK
CRP 301422
HOR. 1"=20'
VERT. 1"=5'
DATE 3/31/04
DWG: DP02
SHEET OF

CALL 48 HOURS BEFORE YOU DIG
1-800-553-4344
"It's the Law"
NORTHWEST UTILITIES NOTIFICATION CENTER

STATE OF WASHINGTON
MILLER, SCOTT
31148
REGISTERED PROFESSIONAL ENGINEER
EXPIRES: JULY 7, 2003

DESIGN & ENGINEERING DIVISION
DESIGN SECTION

ST. JOHNS RD (NE 50TH TO NE 72ND)
DRAINAGE PLAN (STA 16+00 TO 21+00)

proud past, promising future
CLARK COUNTY
WASHINGTON

N:\CIP\PROJECTS\301422-STJohns-50thTo72nd\DESIGN\DWGS\dp02.dwg, 3/24/2004 10:55:48 AM, kerlinr

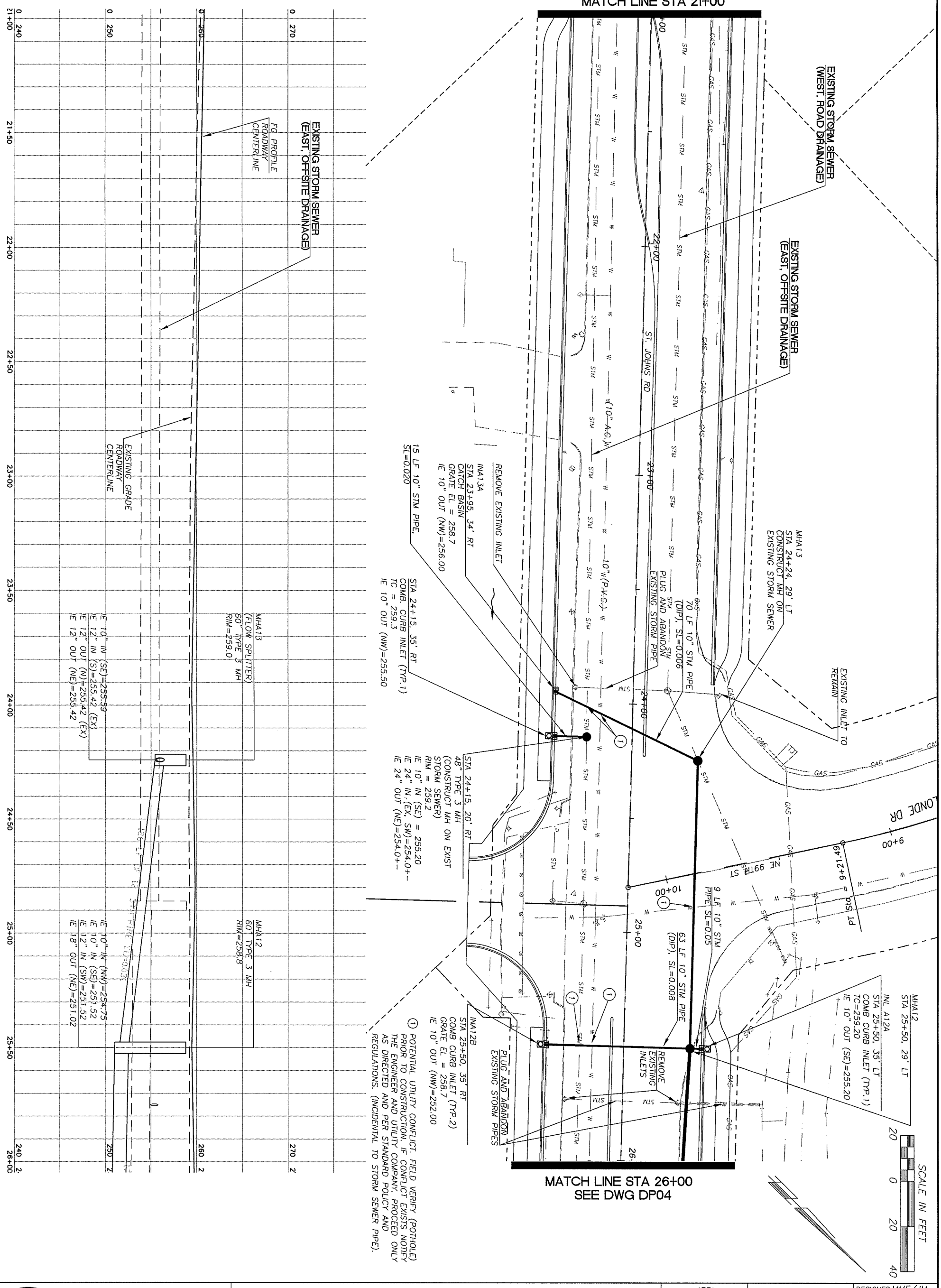

① POTENTIAL UTILITY CONFLICT. FIELD VERIFY (POTHOLE) PRIOR TO CONSTRUCTION. IF CONFLICT EXISTS NOTIFY THE ENGINEER AND UTILITY COMPANY. PROCEED ONLY AS DIRECTED AND PER STANDARD POLICY AND REGULATIONS. (INCIDENTAL TO STORM SEWER PIPE).

CLARK COUNTY WASHINGTON
proud past, promising future

DESIGN & ENGINEERING DIVISION
DESIGN SECTION

ST. JOHNS RD (NE 50TH TO NE 72ND)
DRAINAGE PLAN (STA 21+00 TO 26+00)

JOHN MILNE — STATE OF WASHINGTON — 31148 — REGISTERED PROFESSIONAL ENGINEER
EXPIRES: JULY 7, 2003

CALL 48 HOURS BEFORE YOU DIG
1-800-553-4344
"It's the Law"
NORTHWEST UTILITIES NOTIFICATION CENTER

DESIGNED	MME/JM
DRAWN	BAK
CRP	301422
HOR.	1"=20'
VERT.	1"=5'
DATE	3/31/04
DWG:	DP03
SHEET	OF

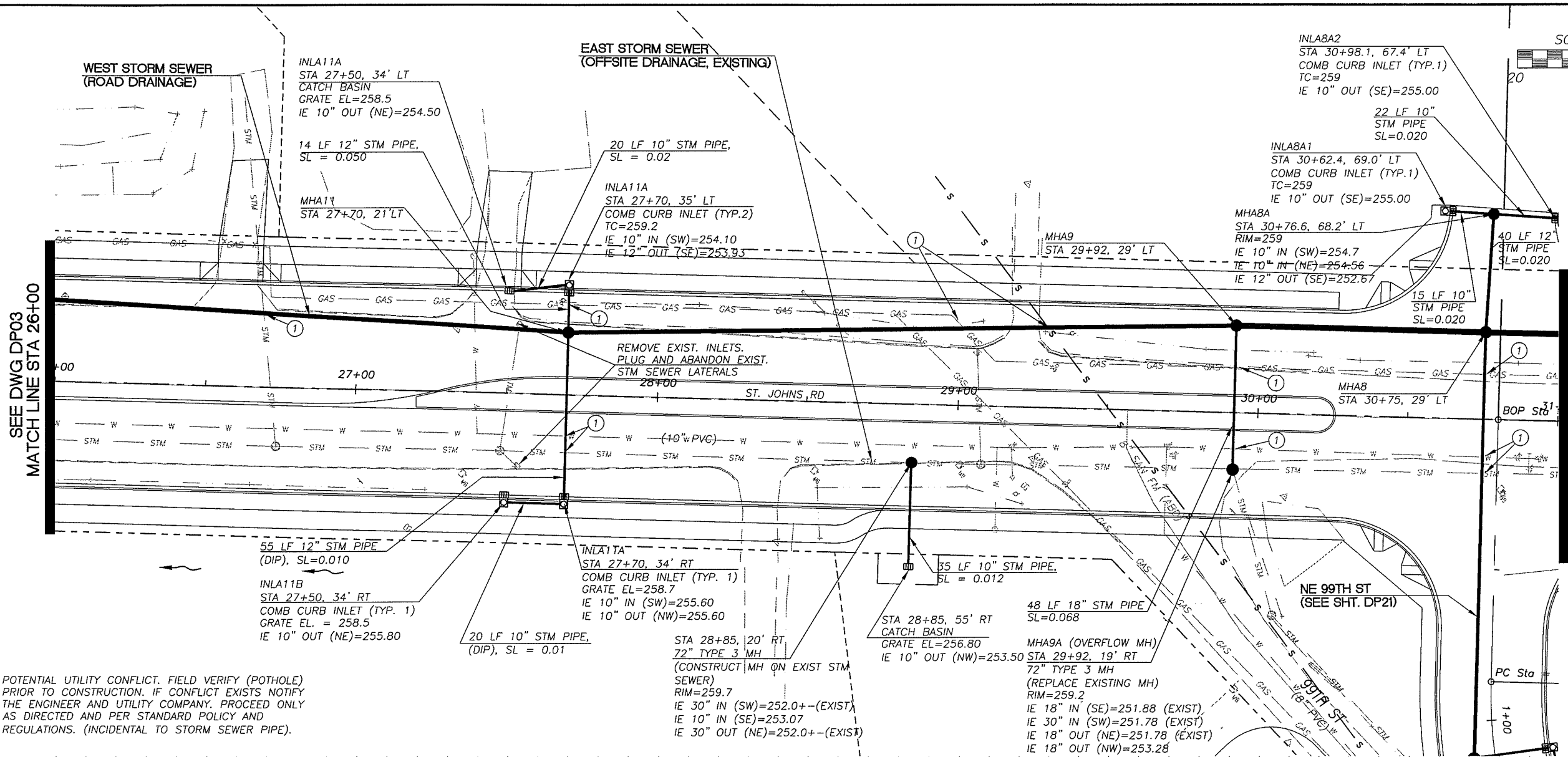

① POTENTIAL UTILITY CONFLICT. FIELD VERIFY (POTHOLE) PRIOR TO CONSTRUCTION. IF CONFLICT EXISTS NOTIFY THE ENGINEER AND UTILITY COMPANY. PROCEED ONLY AS DIRECTED AND PER STANDARD POLICY AND REGULATIONS. (INCIDENTAL TO STORM SEWER PIPE).

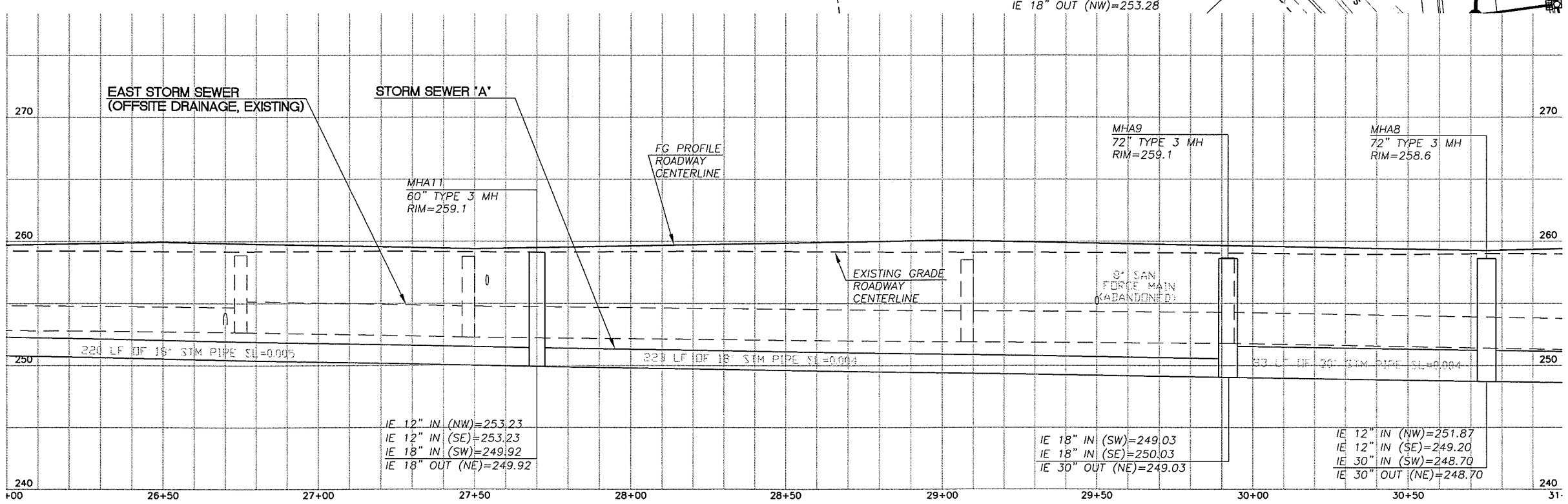

DESIGNED	MME/JM
DRAWN	BAK
CRP	301422
HOR.	1"=20'
VERT.	1"=5'
DATE	3/31/04
DWG.	DP04
SHEET	OF

CALL 48 HOURS BEFORE YOU DIG 1-800-553-4344 "It's the Law" NORTHWEST UTILITIES NOTIFICATION CENTER

STATE OF WASHINGTON MICHAEL J. GIBBS 31148 PROFESSIONAL ENGINEER EXPIRES: JULY 7, 2003

DESIGN & ENGINEERING DIVISION
DESIGN SECTION

ST. JOHNS RD (NE 50TH TO NE 72ND)
DRAINAGE PLAN (STA 26+00 TO 31+00)

proud past, promising future
CLARK COUNTY WASHINGTON

N:\CIP\PROJECTS\301422-STJohns-50thTo72nd\DESIGN\DWGS\dp04.dwg, 3/24/2004 10:56:58 AM, kerlinr

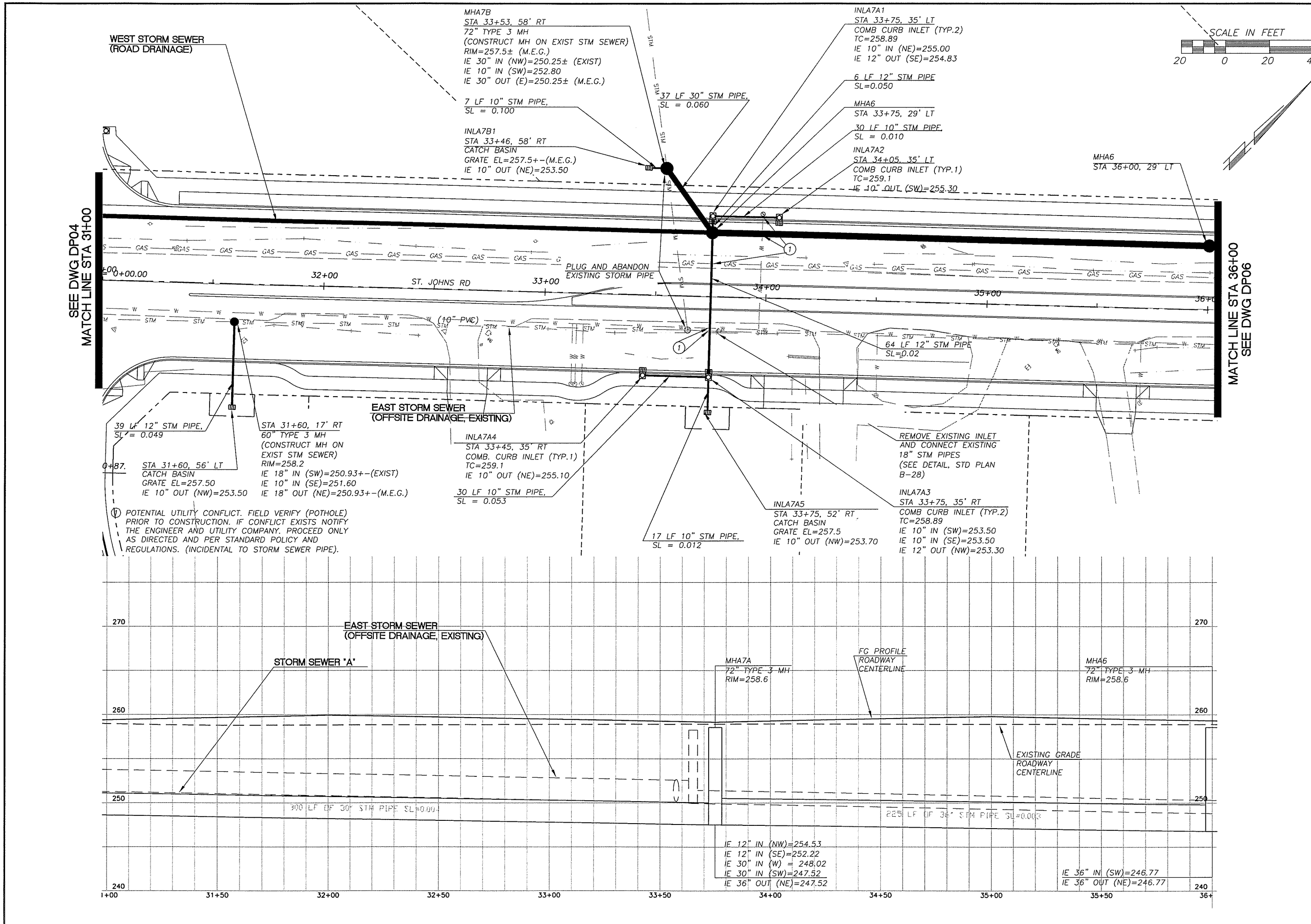

DESIGNED MME/JM
DRAWN BAK
CRP 301422
HOR. 1"=20'
VERT. 1"=5'
DATE 3/31/04
DWG: DP05
SHEET OF

CALL 48 HOURS BEFORE YOU DIG
1-800-553-4344
"It's the Law"
NORTHWEST UTILITIES NOTIFICATION CENTER

JOHN MILNE
STATE OF WASHINGTON
31148
REGISTERED PROFESSIONAL ENGINEER
EXPIRES JULY 7, 2003

DESIGN & ENGINEERING DIVISION
DESIGN SECTION

ST. JOHNS RD (NE 50TH TO NE 72ND)
DRAINAGE PLAN (STA 31+00 TO 36+00)

proud past, promising future
CLARK COUNTY
WASHINGTON

N:\CIP\PROJECTS\301422-STJohns-50thTo72nd\DESIGN\DWGS\dp05.dwg, 3/24/2004 10:57:32 AM, kerlinr

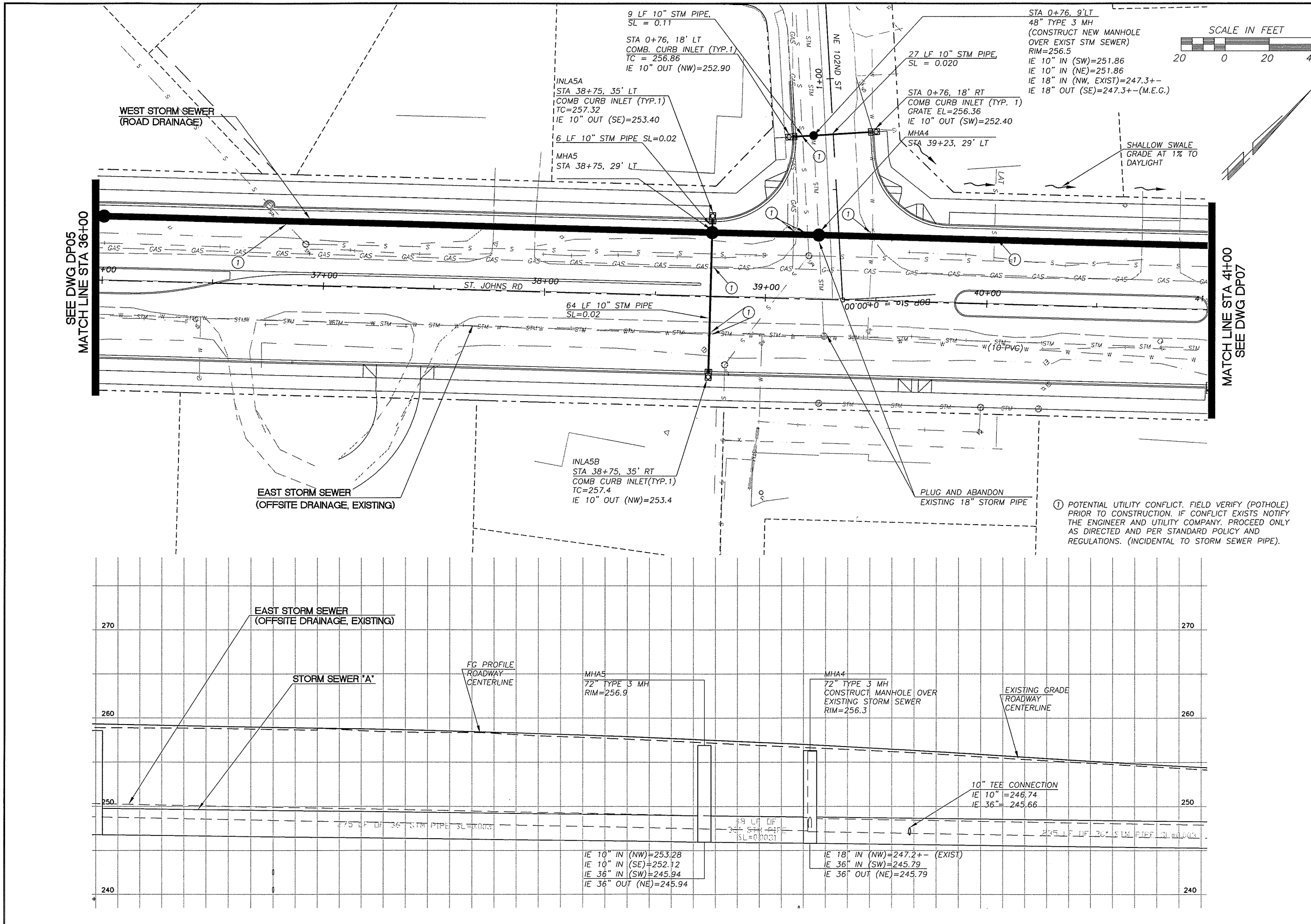

① POTENTIAL UTILITY CONFLICT. FIELD VERIFY (POTHOLE) PRIOR TO CONSTRUCTION. IF CONFLICT EXISTS NOTIFY THE ENGINEER AND UTILITY COMPANY. PROCEED ONLY AS DIRECTED AND PER STANDARD POLICY AND REGULATIONS. (INCIDENTAL TO STORM SEWER PIPE).

DESIGNED MME/JM
DRAWN BAK
CRP 301422
HOR. 1"=20'
VERT. 1"=5'
DATE 3/31/04
DWG: DP06
SHEET OF

CALL 48 HOURS BEFORE YOU DIG
1-800-553-4344
"It's the Law"
NORTHWEST UTILITIES NOTIFICATION CENTER

JOHN MILNE
STATE OF WASHINGTON
31148
REGISTERED PROFESSIONAL ENGINEER
EXPIRES: JULY 7, 2003

DESIGN & ENGINEERING DIVISION
DESIGN SECTION

ST. JOHNS RD (NE 50TH TO NE 72ND)
DRAINAGE PLAN (STA 36+00 TO 41+00)

proud past, promising future
CLARK COUNTY WASHINGTON

N:\CIP\PROJECTS\301422-STJohns-50thTo72nd\DESIGN\DWGS\dp06.dwg, 3/24/2004 10:58:02 AM, kcrlinr

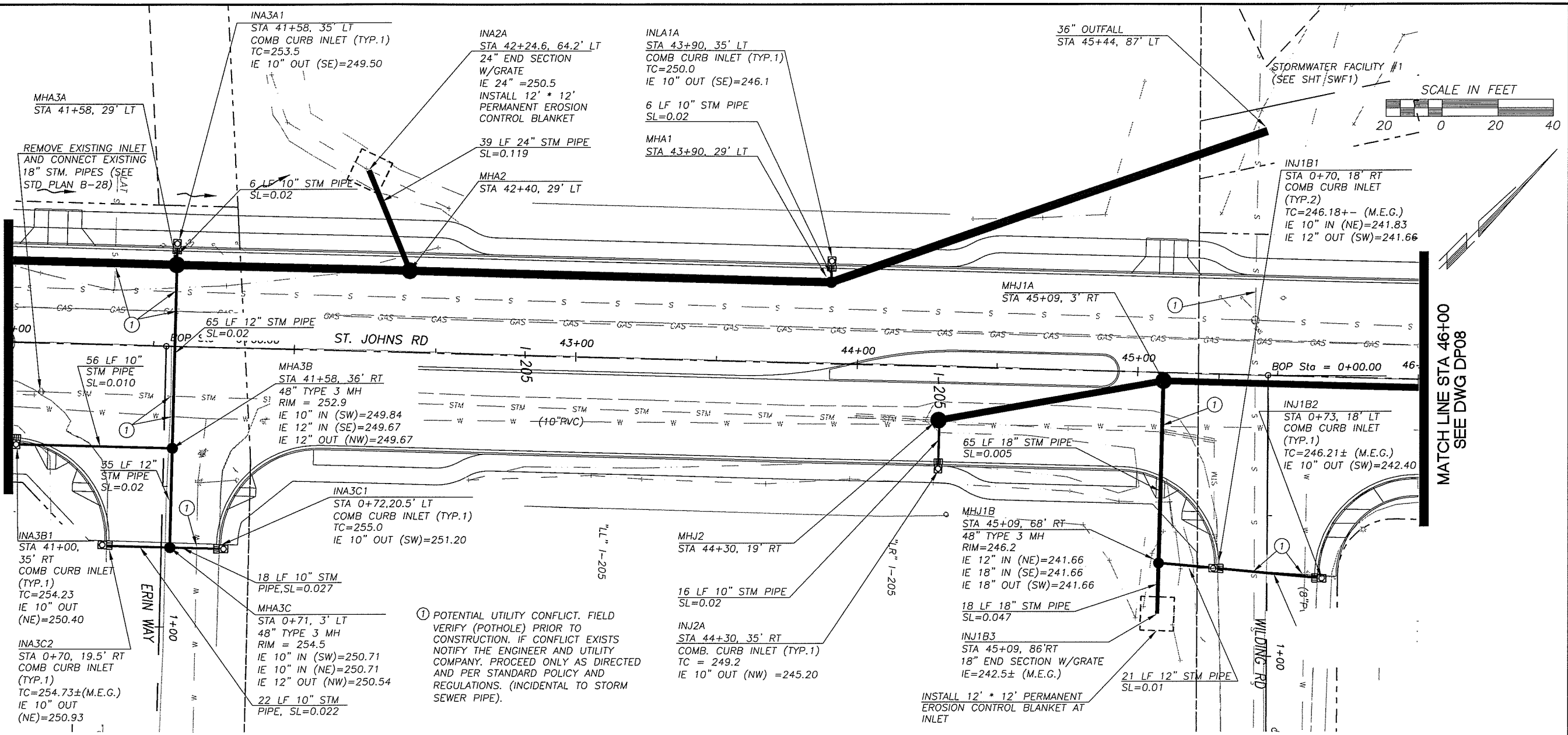

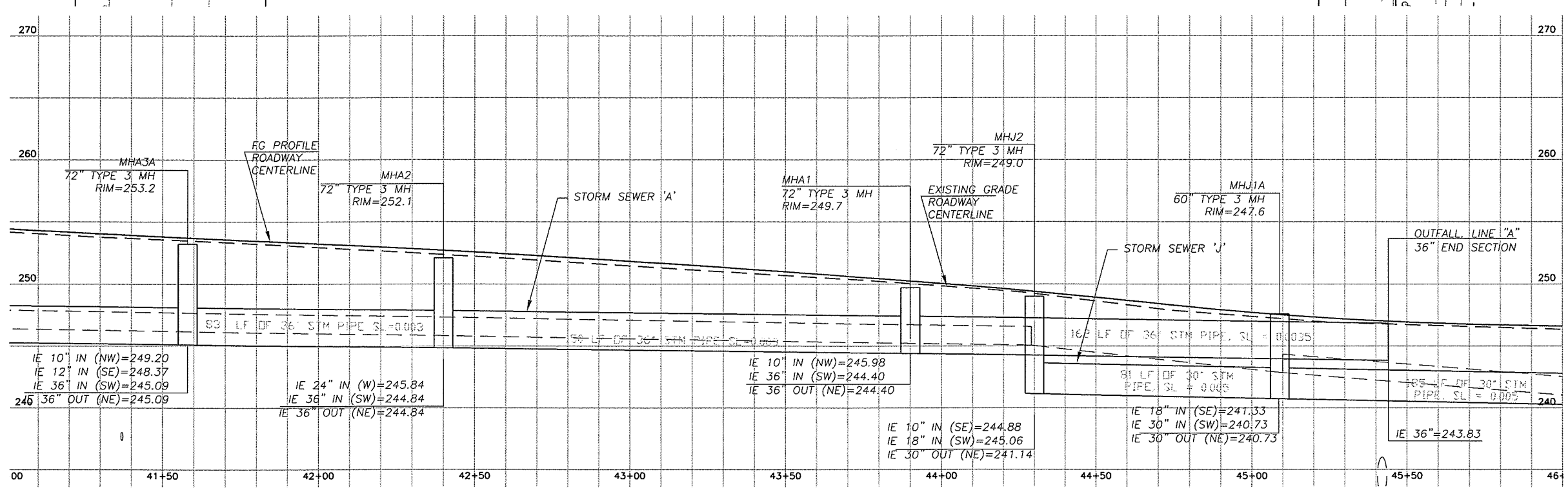

DESIGNED	MME/JM
DRAWN	BAK
CRP	301422
HOR.	1"=20'
VERT.	1"=5'
DATE	3/31/04
DWG:	DP07
SHEET	OF

CALL 48 HOURS BEFORE YOU DIG
1-800-553-4344
"It's the Law"
NORTHWEST UTILITIES NOTIFICATION CENTER

STATE OF WASHINGTON
MICHAEL J. MILLER
31148
REGISTERED PROFESSIONAL ENGINEER
EXPIRES JULY 7, 2003

DESIGN & ENGINEERING DIVISION
DESIGN SECTION

ST. JOHNS RD (NE 50TH TO NE 72ND)
DRAINAGE PLAN (STA 41+00 TO 46+00)

proud past, promising future
CLARK COUNTY
WASHINGTON

N:\CIP\PROJECTS\301422-STJohns-50thTo72nd\DESIGN\DWGS\dp07.dwg, 3/24/2004 10:59:14 AM, kcrfinr

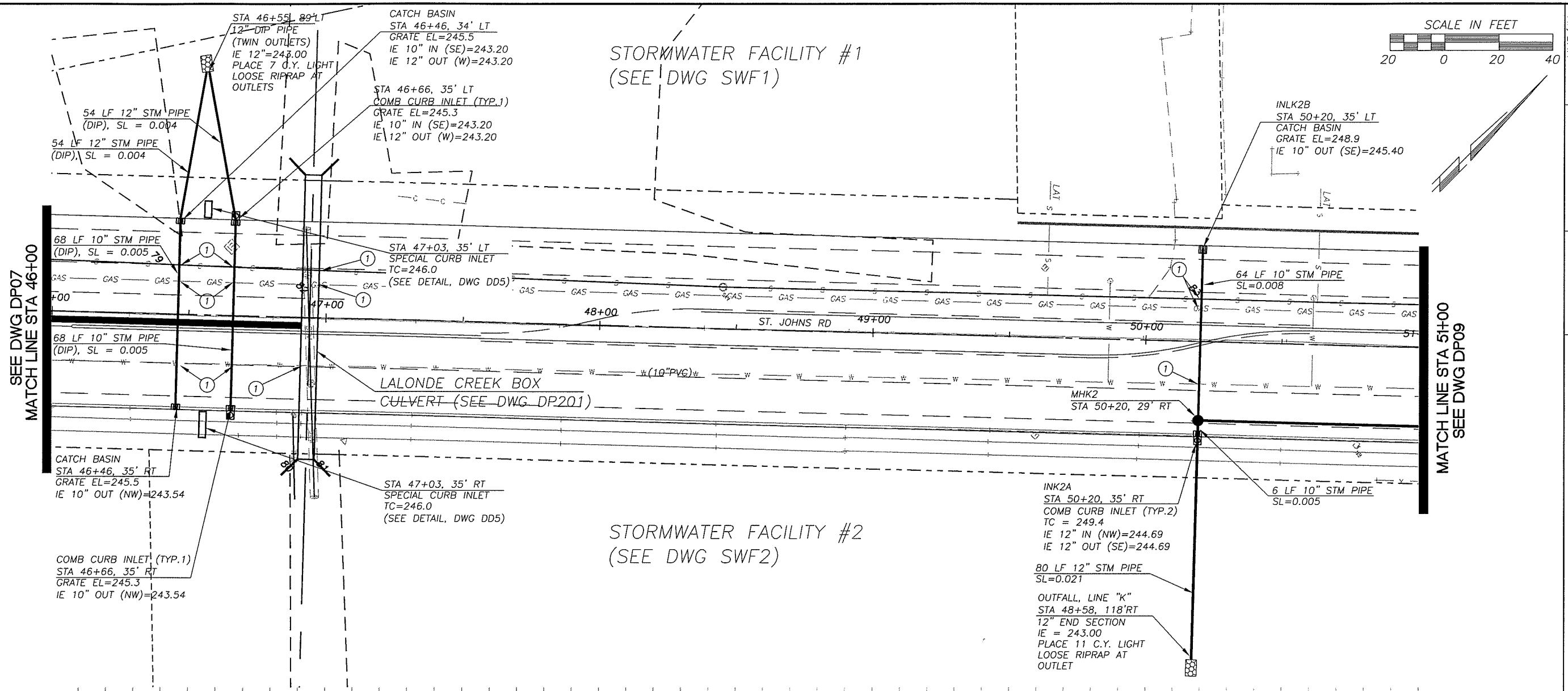

① POTENTIAL UTILITY CONFLICT. FIELD VERIFY (POTHOLE) PRIOR TO CONSTRUCTION. IF CONFLICT EXISTS NOTIFY THE ENGINEER AND UTILITY COMPANY. PROCEED ONLY AS DIRECTED AND PER STANDARD POLICY AND REGULATIONS. (INCIDENTAL TO STORM SEWER PIPE).

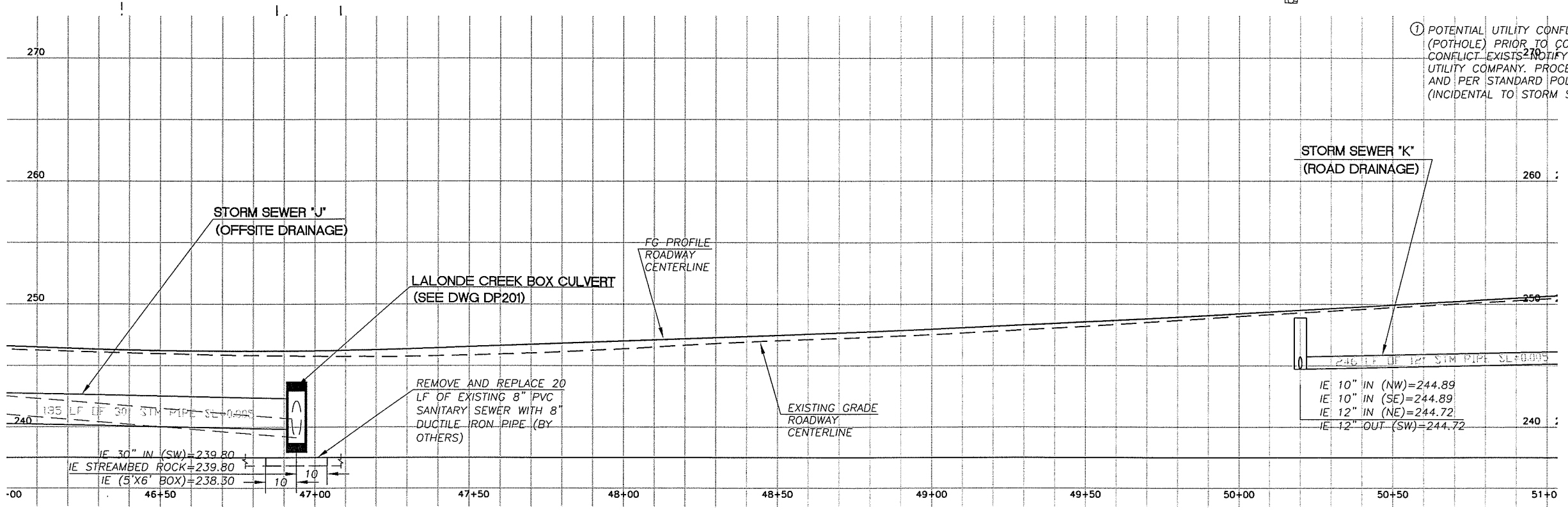

DESIGNED	MME/JM
DRAWN	BAK
CRP	301422
HOR.	1"=20'
VERT.	1"=5'
DATE	3/31/04
DWG:	DP08
SHEET	OF

CALL 48 HOURS BEFORE YOU DIG 1-800-553-4344 "It's the Law" NORTHWEST UTILITIES NOTIFICATION CENTER

STATE OF WASHINGTON MICHAEL STEVENS BRADLEY 31148 REGISTERED PROFESSIONAL ENGINEER
EXPIRES JULY 7, 2003

DESIGN & ENGINEERING DIVISION
DESIGN SECTION

ST. JOHNS RD (NE 50TH TO NE 72ND)
DRAINAGE PLAN (STA 46+00 TO 51+00)

proud past, promising future
CLARK COUNTY WASHINGTON

N:\CIP\PROJECTS\301422-STJohns-50thTo72nd\DESIGN\DWGS\dp08.dwg, 3/24/2004 11:00:00 AM, kerlinr

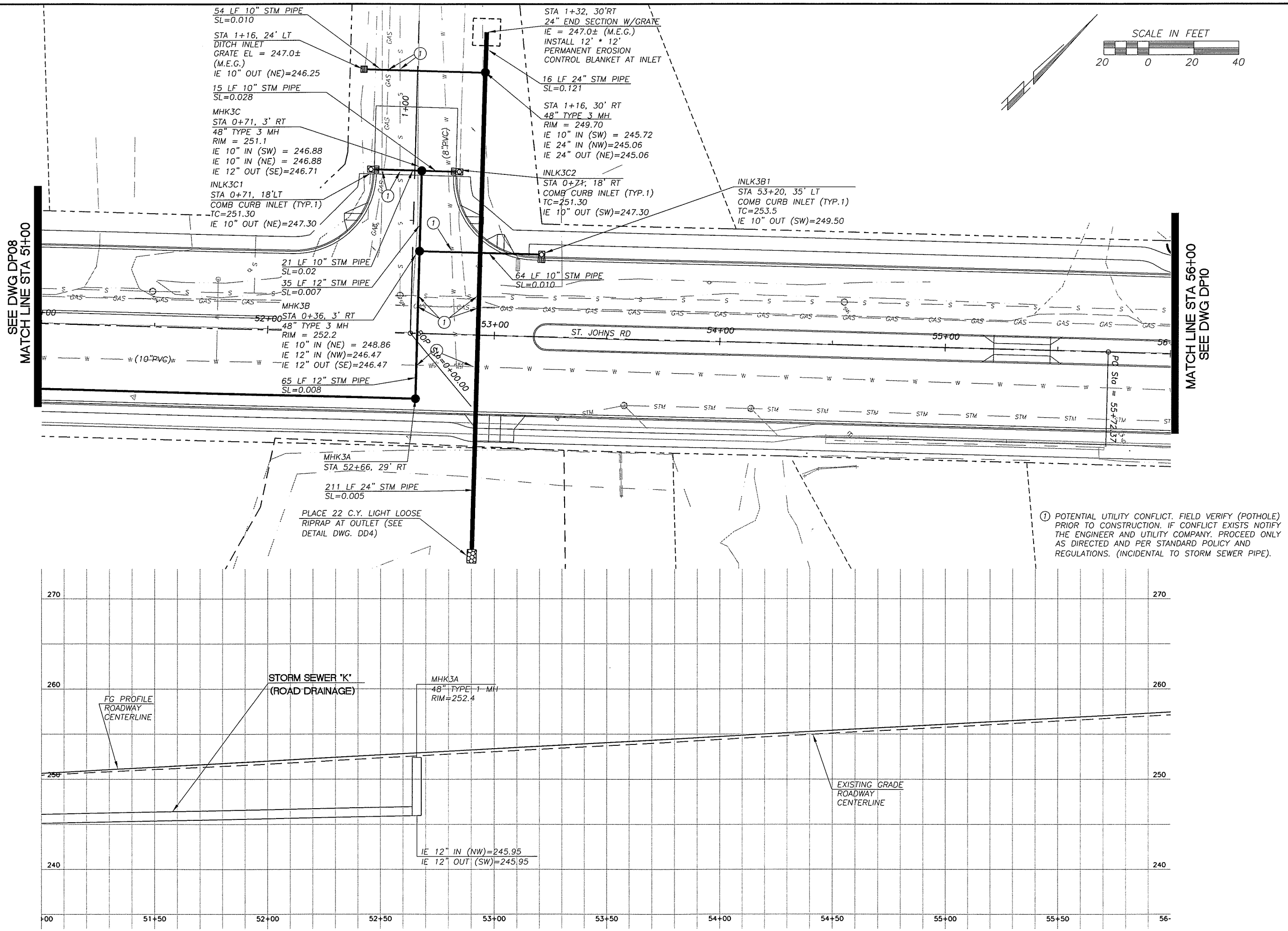

① POTENTIAL UTILITY CONFLICT. FIELD VERIFY (POTHOLE) PRIOR TO CONSTRUCTION. IF CONFLICT EXISTS NOTIFY THE ENGINEER AND UTILITY COMPANY. PROCEED ONLY AS DIRECTED AND PER STANDARD POLICY AND REGULATIONS. (INCIDENTAL TO STORM SEWER PIPE).

DESIGNED	MME/JM
DRAWN	BAK
CRP	301422
HOR.	1"=20'
VERT.	1"=5'
DATE	3/31/04
DWG:	DP09
SHEET	OF

CALL 48 HOURS BEFORE YOU DIG
1-800-553-4344
"It's the Law"
NORTHWEST UTILITIES NOTIFICATION CENTER

JOHN MILNE
STATE OF WASHINGTON
31148
REGISTERED PROFESSIONAL ENGINEER
EXPIRES: JULY 7, 2003

DESIGN & ENGINEERING DIVISION
DESIGN SECTION

ST. JOHNS RD (NE 50TH TO NE 72ND)
DRAINAGE PLAN (STA 51+00 TO 56+00)

proud past, promising future
CLARK COUNTY
WASHINGTON

N:\CIP\PROJECTS\301422-STJohns-50thTo72nd\DESIGN\DWGS\dp09.dwg, 3/24/2004 11:00:32 AM, kerlinr

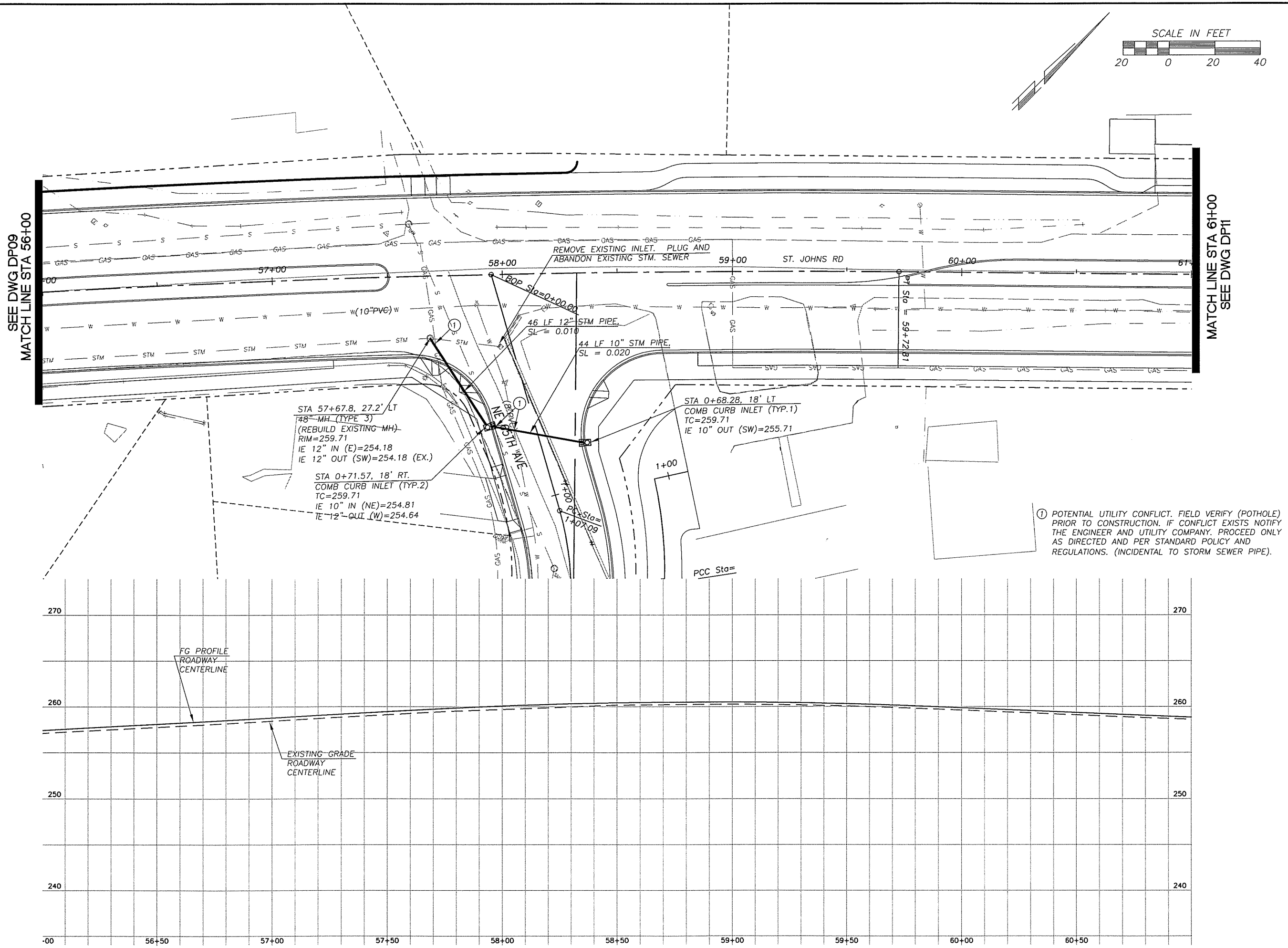

DESIGNED MME/JM
DRAWN BAK
CRP 301422
HOR. 1"=20'
VERT. 1"=5'
DATE 3/31/04
DWG: DP10
SHEET OF

CALL 48 HOURS BEFORE YOU DIG
1-800-553-4344
"It's the Law"
NORTHWEST UTILITIES NOTIFICATION CENTER

STATE OF WASHINGTON
MICHAEL E. MEDLOCK
31148
REGISTERED PROFESSIONAL ENGINEER
EXPIRES JULY 7, 2003

DESIGN & ENGINEERING DIVISION
DESIGN SECTION

ST. JOHNS RD (NE 50TH TO NE 72ND)
DRAINAGE PLAN (STA 56+00 TO 61+00)

proud past, promising future
CLARK COUNTY
WASHINGTON

N:\CIP\PROJECTS\301422-STJohns-50thTo72nd\DESIGN\DWGS\dp10.dwg, 3/24/2004 11:01:02 AM, kerlinr

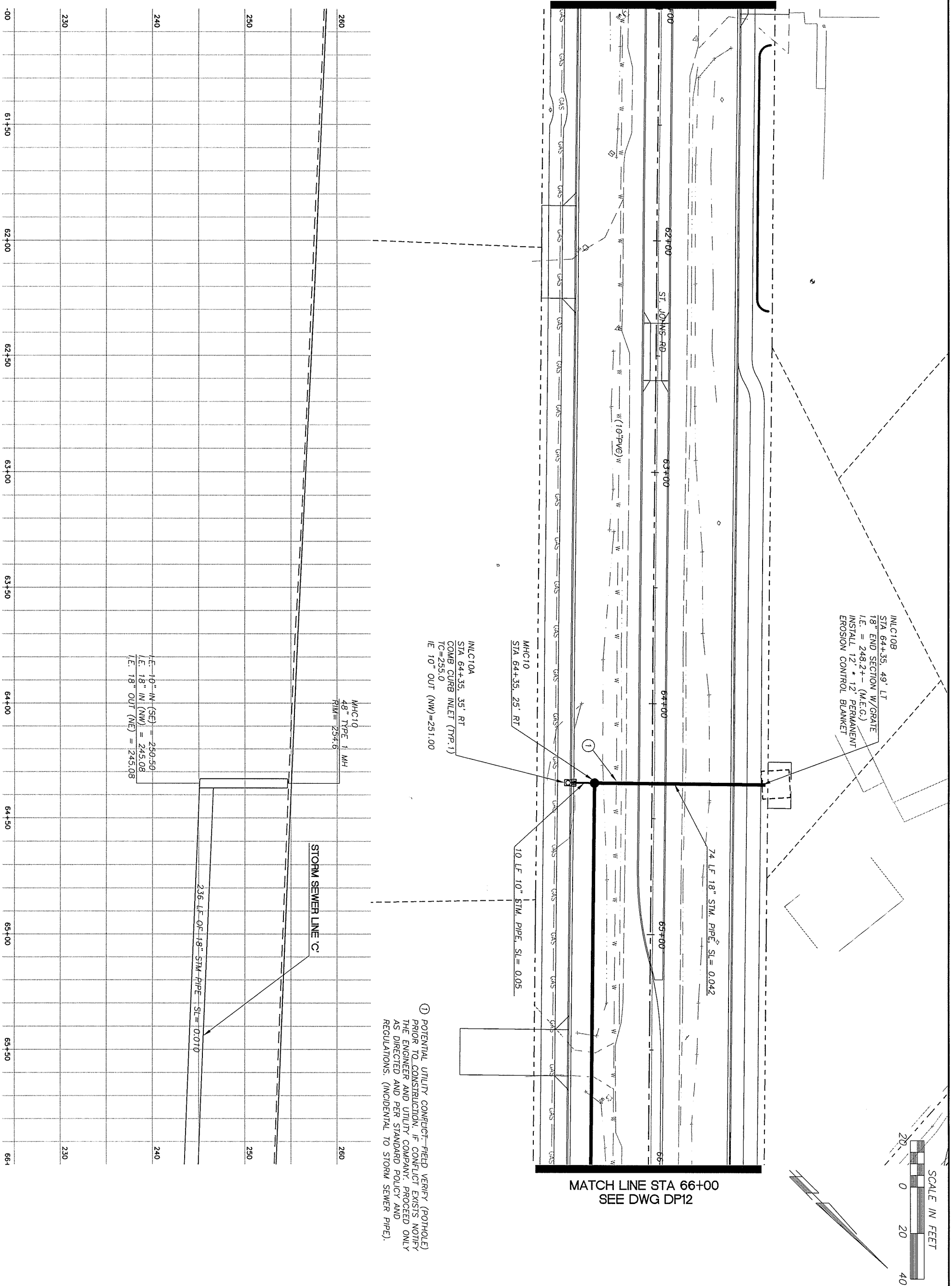

① POTENTIAL UTILITY CONFLICT - FIELD VERIFY (POTHOLE) PRIOR TO CONSTRUCTION. IF CONFLICT EXISTS NOTIFY THE ENGINEER AND UTILITY COMPANY. PROCEED ONLY AS DIRECTED AND PER STANDARD POLICY AND REGULATIONS. (INCIDENTAL TO STORM SEWER PIPE).

CLARK COUNTY
WASHINGTON
proud past, promising future

DESIGN & ENGINEERING DIVISION
DESIGN SECTION

ST. JOHNS RD (NE 50TH TO NE 72ND)
DRAINAGE PLAN (STA 61+00 TO 66+00)

JOHN MILNE
STATE OF WASHINGTON
31148
REGISTERED
PROFESSIONAL ENGINEER
EXPIRES: JULY 7, 2003

CALL 48 HOURS BEFORE YOU DIG
1-800-553-4344
"It's the Law"
NORTHWEST UTILITIES NOTIFICATION CENTER

DESIGNED	MME/JM
DRAWN	BAK
CRP	301422
HOR.	1"=20'
VERT.	1"=5'
DATE	3/31/04
DWG:	DP11
SHEET	OF

N:\CIP\PROJECTS\301422-STJohns-50thTo72nd\DESIGN\DWGS\dp12.dwg, 3/24/2004 11:01:55 AM, kerlinr

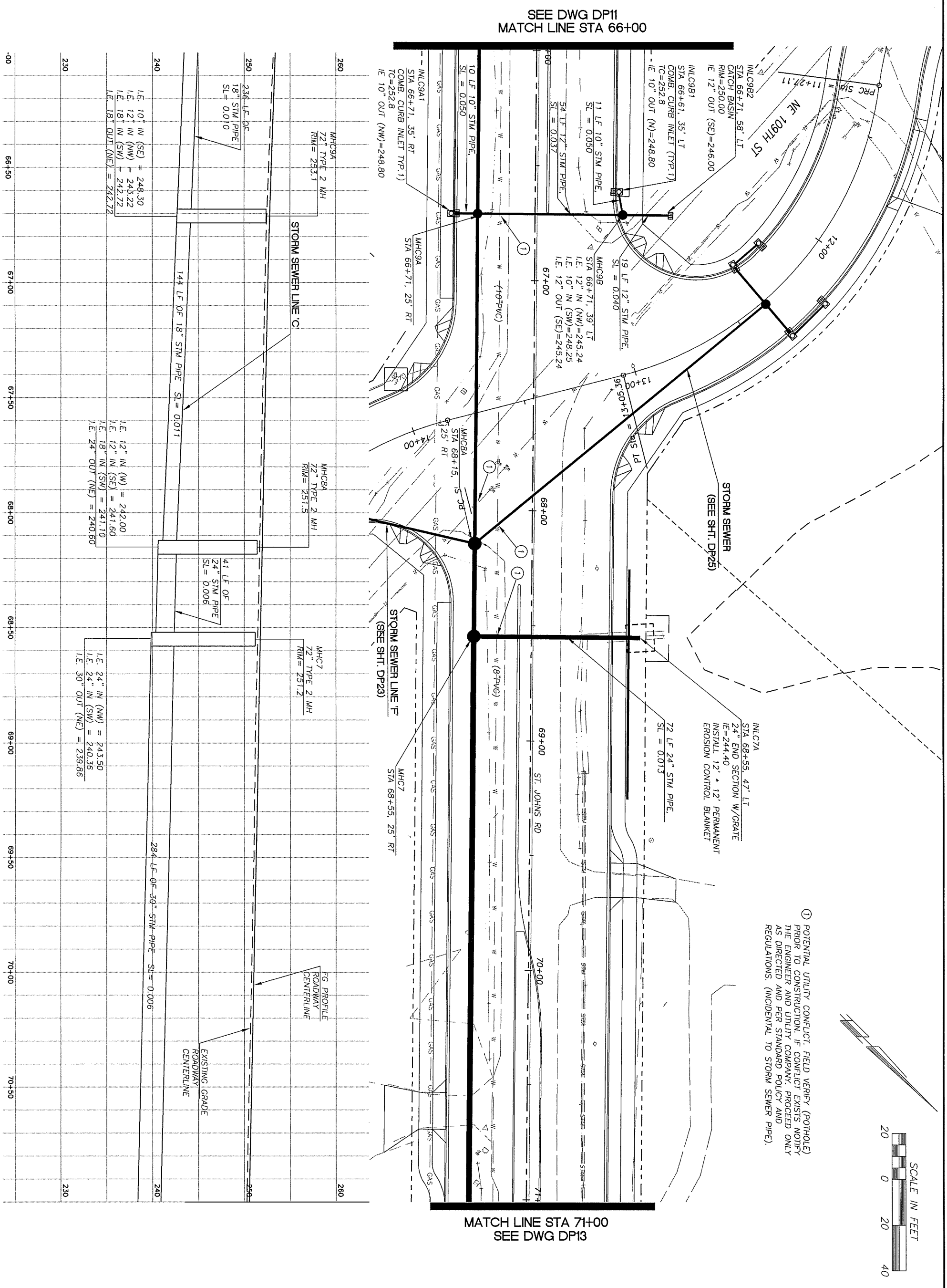

① POTENTIAL UTILITY CONFLICT. FIELD VERIFY (POTHOLE) PRIOR TO CONSTRUCTION. IF CONFLICT EXISTS NOTIFY THE ENGINEER AND UTILITY COMPANY. PROCEED ONLY AS DIRECTED AND PER STANDARD POLICY AND REGULATIONS. (INCIDENTAL TO STORM SEWER PIPE).

proud past, promising future

CLARK COUNTY
WASHINGTON

DESIGN & ENGINEERING DIVISION
DESIGN SECTION

ST. JOHNS RD (NE 50TH TO NE 72ND)
DRAINAGE PLAN (STA 66+00 TO 71+00)

JOHN MILNE
STATE OF WASHINGTON
31148
REGISTERED
PROFESSIONAL ENGINEER
EXPIRES: JULY 7, 2003

CALL 48 HOURS BEFORE YOU DIG
1-800-553-4344
"It's the Low"
NORTHWEST UTILITIES NOTIFICATION CENTER

DESIGNED	MME/JM
DRAWN	JM
CRP	301422
HOR.	1"=20'
VERT.	1"=5'
DATE	3/31/04
DWG:	DP12
SHEET	OF

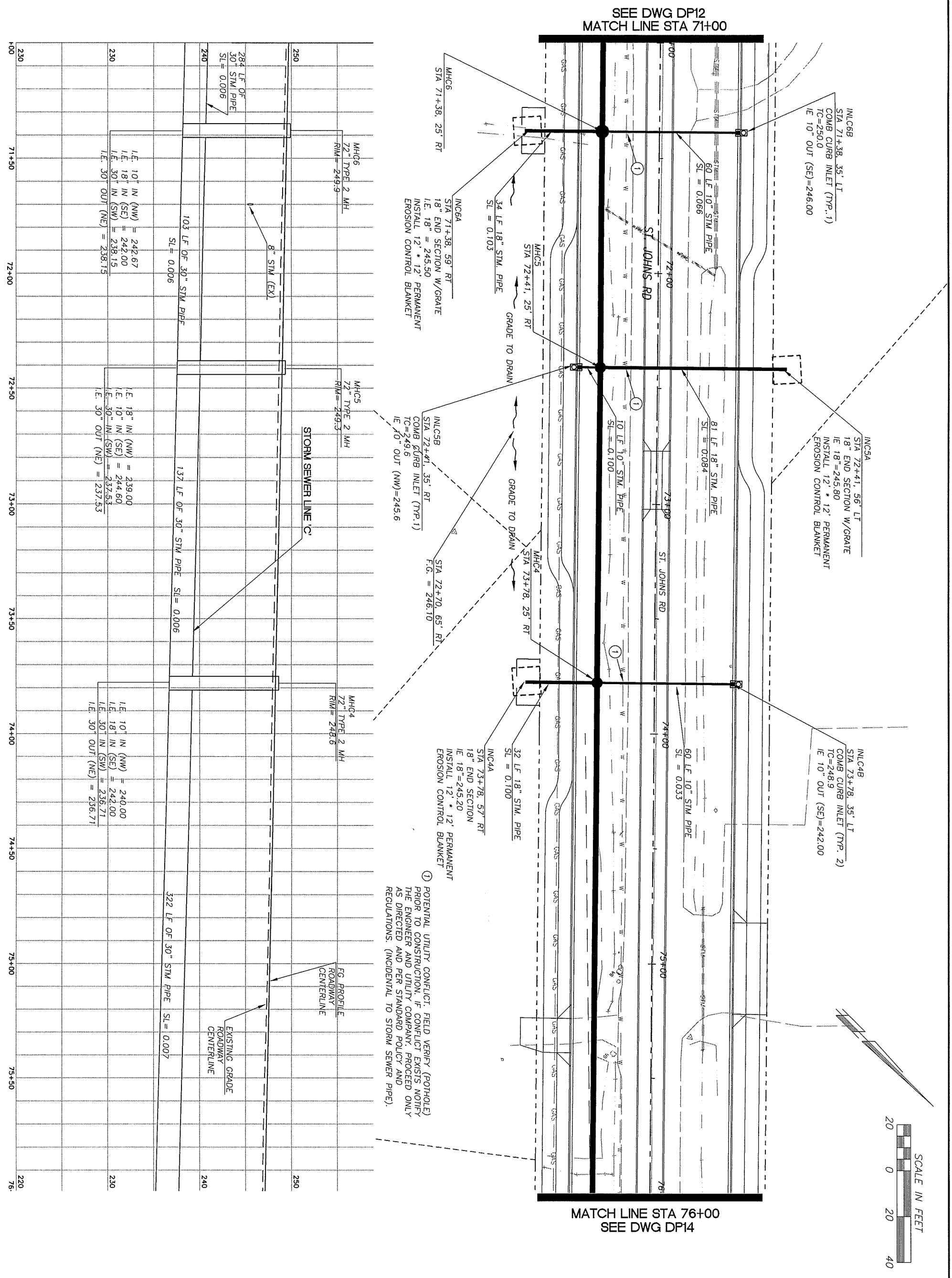

proud past, promising future

CLARK COUNTY
WASHINGTON

DESIGN & ENGINEERING DIVISION
DESIGN SECTION

ST. JOHNS RD (NE 50TH TO NE 72ND)
DRAINAGE PLAN (STA 71+00 TO 76+00)

JOHN MILNE
STATE OF WASHINGTON
31148
REGISTERED
PROFESSIONAL ENGINEER
EXPIRES:JULY 7, 2003

CALL 48 HOURS BEFORE YOU DIG
1-800-553-4344
"It's the Law"
NORTHWEST UTILITIES NOTIFICATION CENTER

DESIGNED	MME/JM
DRAWN	BAK
CRP	301422
HOR.	1"=20'
VERT.	1"=5'
DATE	3/31/04
DWG:	DP13
SHEET	OF

N:\CIP\PROJECTS\301422-STJohns-50thTo72nd\DESIGN\DWGS\dp14.dwg, 3/24/2004 11:02:58 AM, kerlinr

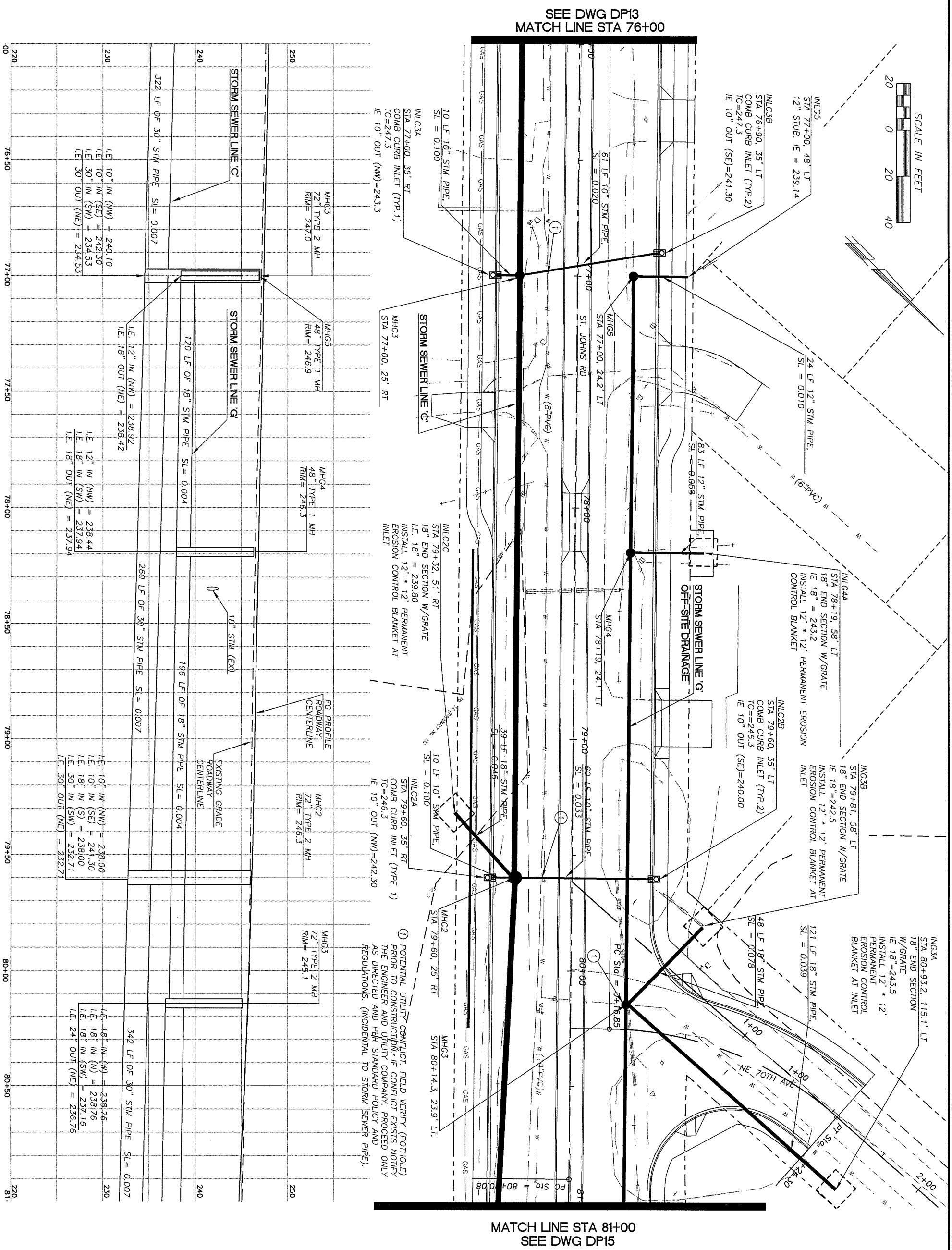

CLARK COUNTY WASHINGTON

proud past, promising future

DESIGN & ENGINEERING DIVISION
DESIGN SECTION

ST. JOHNS RD (NE 50TH TO NE 72ND)
DRAINAGE PLAN (STA 76+00 TO 81+00)

JOHN MILNE STATE OF WASHINGTON 31148 REGISTERED PROFESSIONAL ENGINEER
EXPIRES: JULY 7, 2003

CALL 48 HOURS BEFORE YOU DIG
1-800-553-4344
"It's the Law"
NORTHWEST UTILITIES NOTIFICATION CENTER

DESIGNED	MME/JM
DRAWN	BAK
CRP	301422
HOR.	1"=20'
VERT.	1"=5'
DATE	3/31/04
DWG:	DP14
SHEET	OF

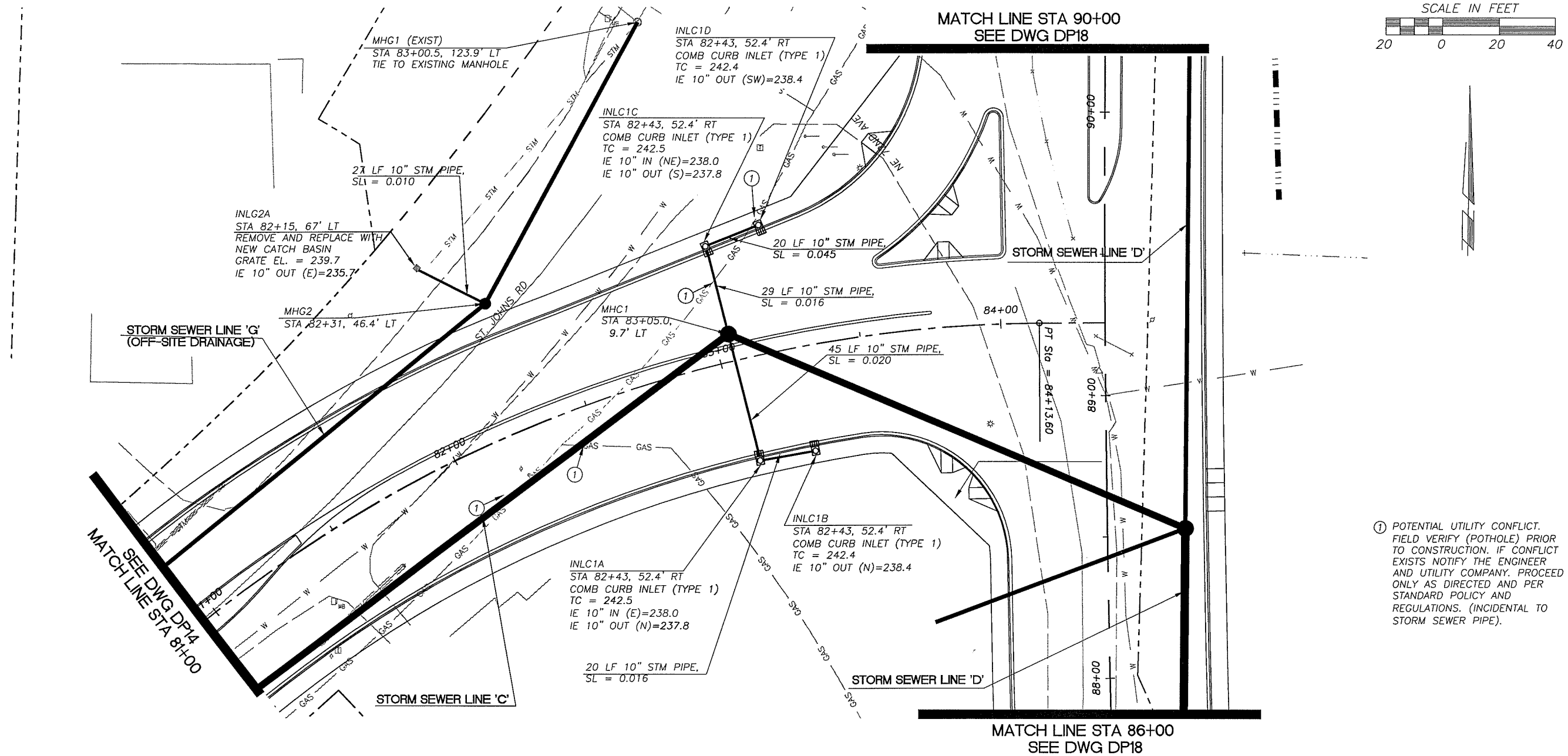

① POTENTIAL UTILITY CONFLICT. FIELD VERIFY (POTHOLE) PRIOR TO CONSTRUCTION. IF CONFLICT EXISTS NOTIFY THE ENGINEER AND UTILITY COMPANY. PROCEED ONLY AS DIRECTED AND PER STANDARD POLICY AND REGULATIONS. (INCIDENTAL TO STORM SEWER PIPE).

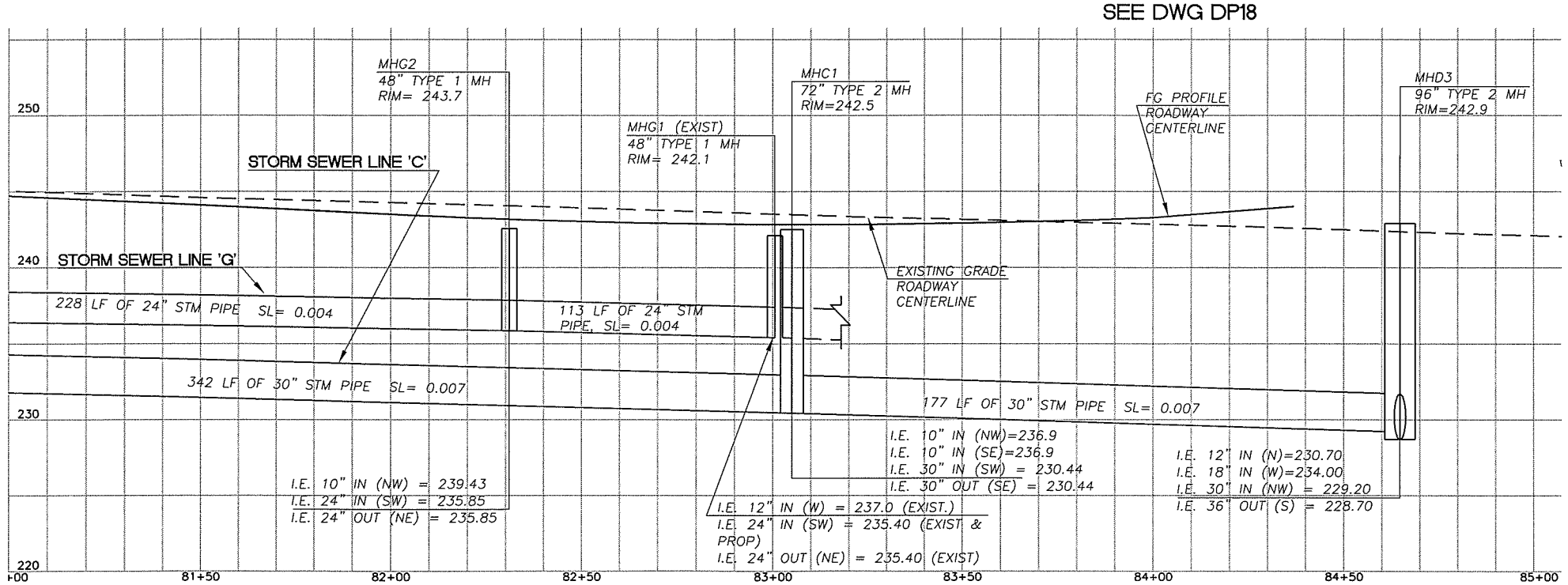

DESIGNED MME/JM
DRAWN BAK
CRP 301422
HOR. 1"=20'
VERT. 1"=5'
DATE 3/31/04
DWG: DP15
SHEET OF

CALL 48 HOURS BEFORE YOU DIG
1-800-553-4344
"It's the Law"
NORTHWEST UTILITIES NOTIFICATION CENTER

JOHN MILNE
STATE OF WASHINGTON
31148
REGISTERED PROFESSIONAL ENGINEER
EXPIRES: JULY 7, 2003

DESIGN & ENGINEERING DIVISION
DESIGN SECTION

ST. JOHNS RD (NE 50TH TO NE 72ND)
DRAINAGE PLAN (STA 81+00 TO STA. 84+36.82)

proud past, promising future
CLARK COUNTY
WASHINGTON

N:\CIP\PROJECTS\301422-STJohns-50thTo72nd\DESIGN\DWGS\dp15.dwg, 3/24/2004 11:04:11 AM, kerlinr

NO DRAINAGE IMPROVEMENTS, THIS SHEET

① POTENTIAL UTILITY CONFLICT. FIELD VERIFY (POTHOLE) PRIOR TO CONSTRUCTION. IF CONFLICT EXISTS NOTIFY THE ENGINEER AND UTILITY COMPANY. PROCEED ONLY AS DIRECTED AND PER STANDARD POLICY AND REGULATIONS. (INCIDENTAL TO STORM SEWER PIPE).

SCALE IN FEET

20 0 20 40

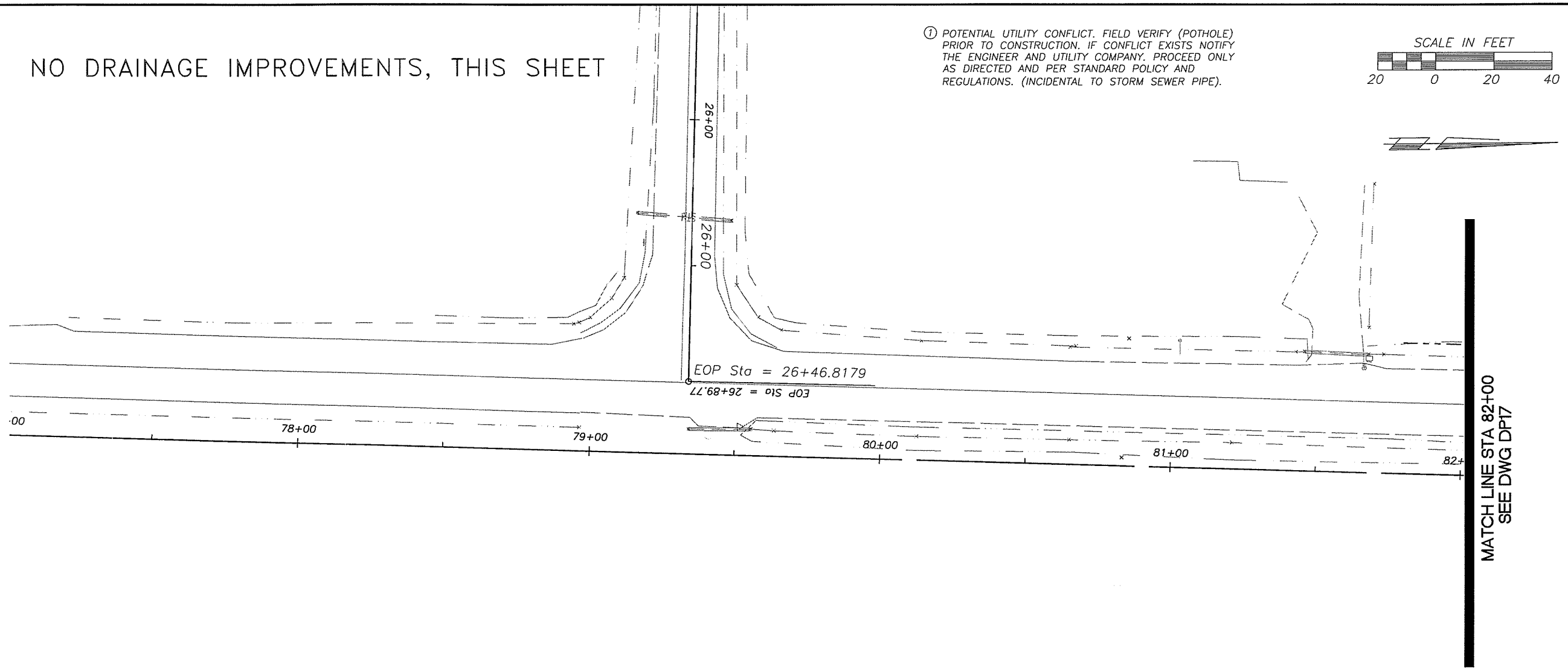

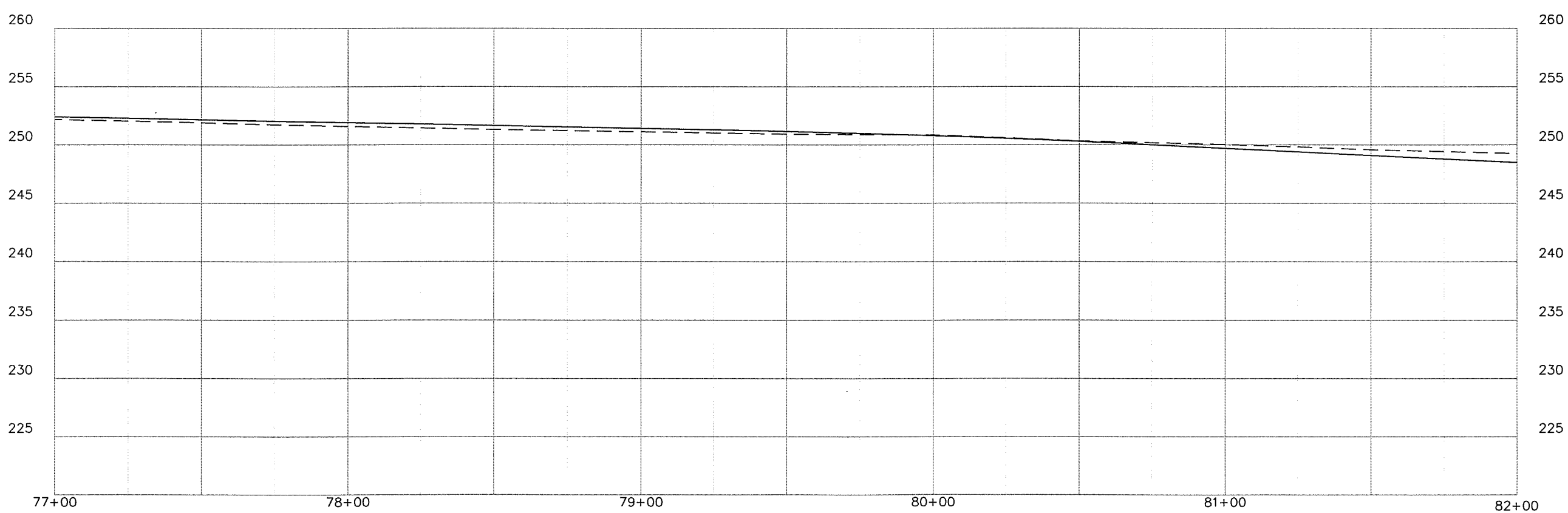

DESIGNED MME/JM
DRAWN BAK
CRP 301422
HOR. 1"=20'
VERT. 1"=5'
DATE 3/31/04
DWG. DP16
SHEET OF

CALL 48 HOURS BEFORE YOU DIG
1-800-553-4344
"It's the Law"
NORTHWEST UTILITIES NOTIFICATION CENTER

STATE OF WASHINGTON
MICHAEL E. MILLER
31148
REGISTERED PROFESSIONAL ENGINEER
EXPIRES JULY 7, 2003

DESIGN & ENGINEERING DIVISION
DESIGN SECTION

ST. JOHNS RD (NE 50TH TO NE 72ND)
DRAINAGE PLAN (STA 77+00 TO 82+00)

proud past, promising future
CLARK COUNTY
WASHINGTON

N:\CIP\PROJECTS\301422-STJohns-50thTo72nd\DESIGN\DWGS\dp16.dwg, 3/24/2004 11:04:44 AM, kerlinr

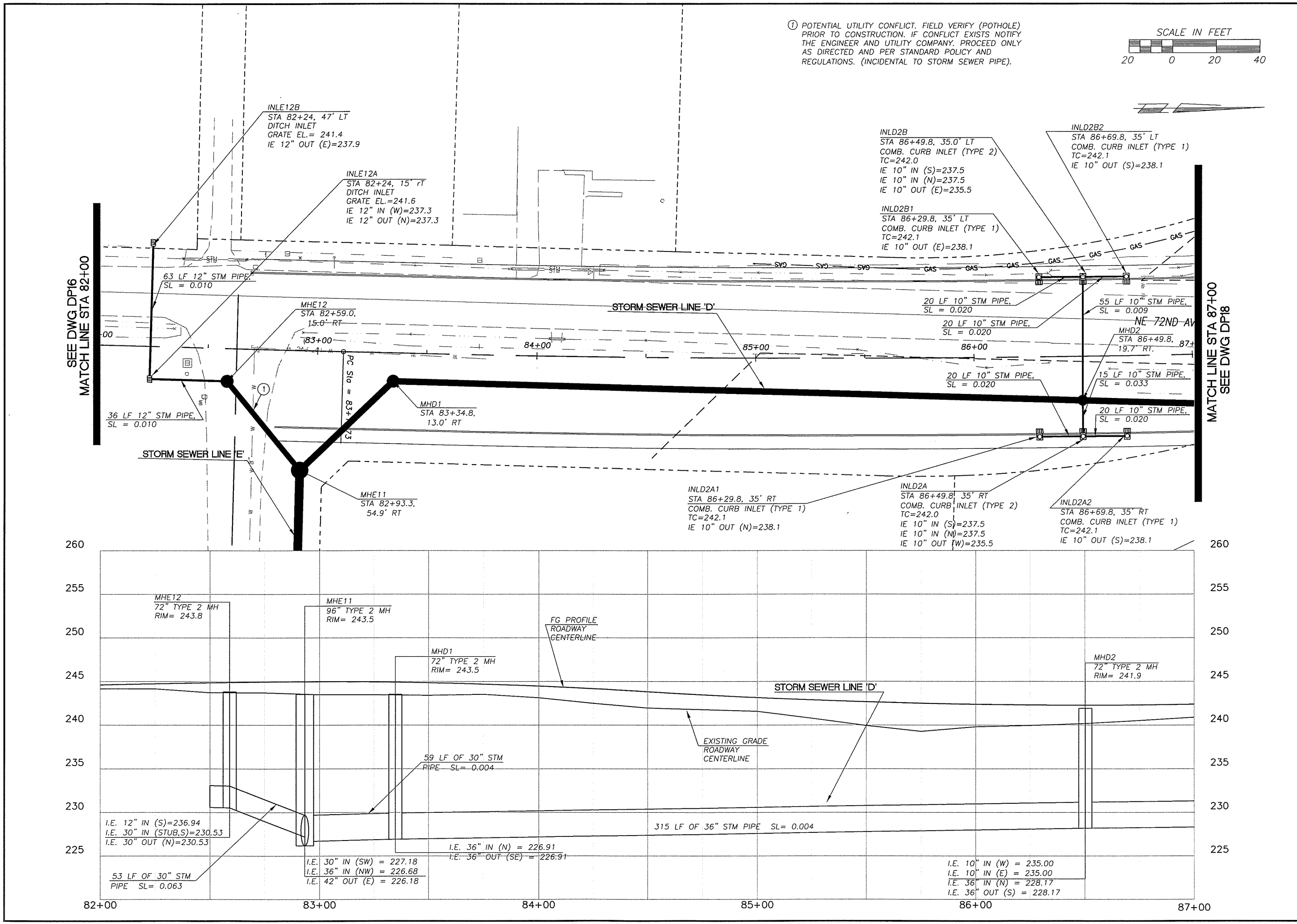

DESIGNED MME/JM
DRAWN BAK
CRP 301422
HOR. 1"=20'
VERT. 1"=5'
DATE 3/31/04
DWG: DP17
SHEET OF

CALL 48 HOURS BEFORE YOU DIG
1-800-553-4344
"It's the Law"
NORTHWEST UTILITIES NOTIFICATION CENTER

JOHN MILNE
STATE OF WASHINGTON
31148
REGISTERED PROFESSIONAL ENGINEER
EXPIRES JULY 7, 2003

DESIGN & ENGINEERING DIVISION
DESIGN SECTION

ST. JOHNS RD (NE 50TH TO NE 72ND)
DRAINAGE PLAN (STA 82+00 TO 87+00)

proud past, promising future
CLARK COUNTY
WASHINGTON

N:\CIP\PROJECTS\301422-STJohns-50thTo72nd\DESIGN\DWGS\dp17.dwg, 3/24/2004 11:05:09 AM, kerlinr

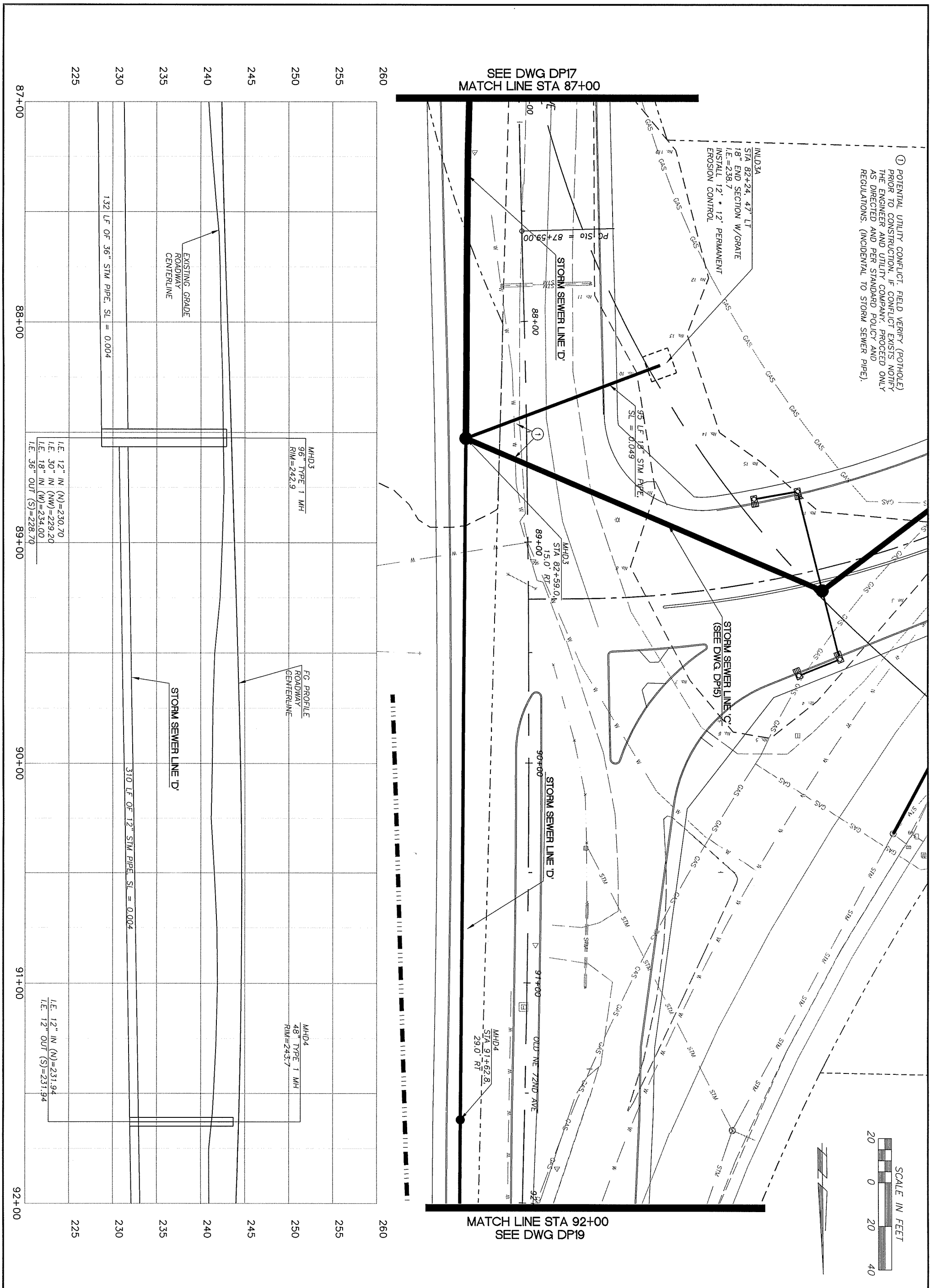

CLARK COUNTY WASHINGTON
proud past, promising future

DESIGN & ENGINEERING DIVISION
DESIGN SECTION

ST. JOHNS RD (NE 50TH TO NE 72ND)
DRAINAGE PLAN (STA 87+00 TO 92+00)

JOHN MILNE, STATE OF WASHINGTON, 31148, REGISTERED PROFESSIONAL ENGINEER
EXPIRES: JULY 7, 2003

CALL 48 HOURS BEFORE YOU DIG
1-800-553-4344
"It's the Law"
NORTHWEST UTILITIES NOTIFICATION CENTER

DESIGNED	MME/JM
DRAWN	BAK
CRP	301422
HOR.	1"=20'
VERT.	1"=5'
DATE	3/31/04
DWG:	DP18
SHEET	OF

N:\CIP\PROJECTS\301422-STJohns-50thTo72nd\DESIGN\DWGS\dp19.dwg, 3/24/2004 11:06:04 AM, kerlinr

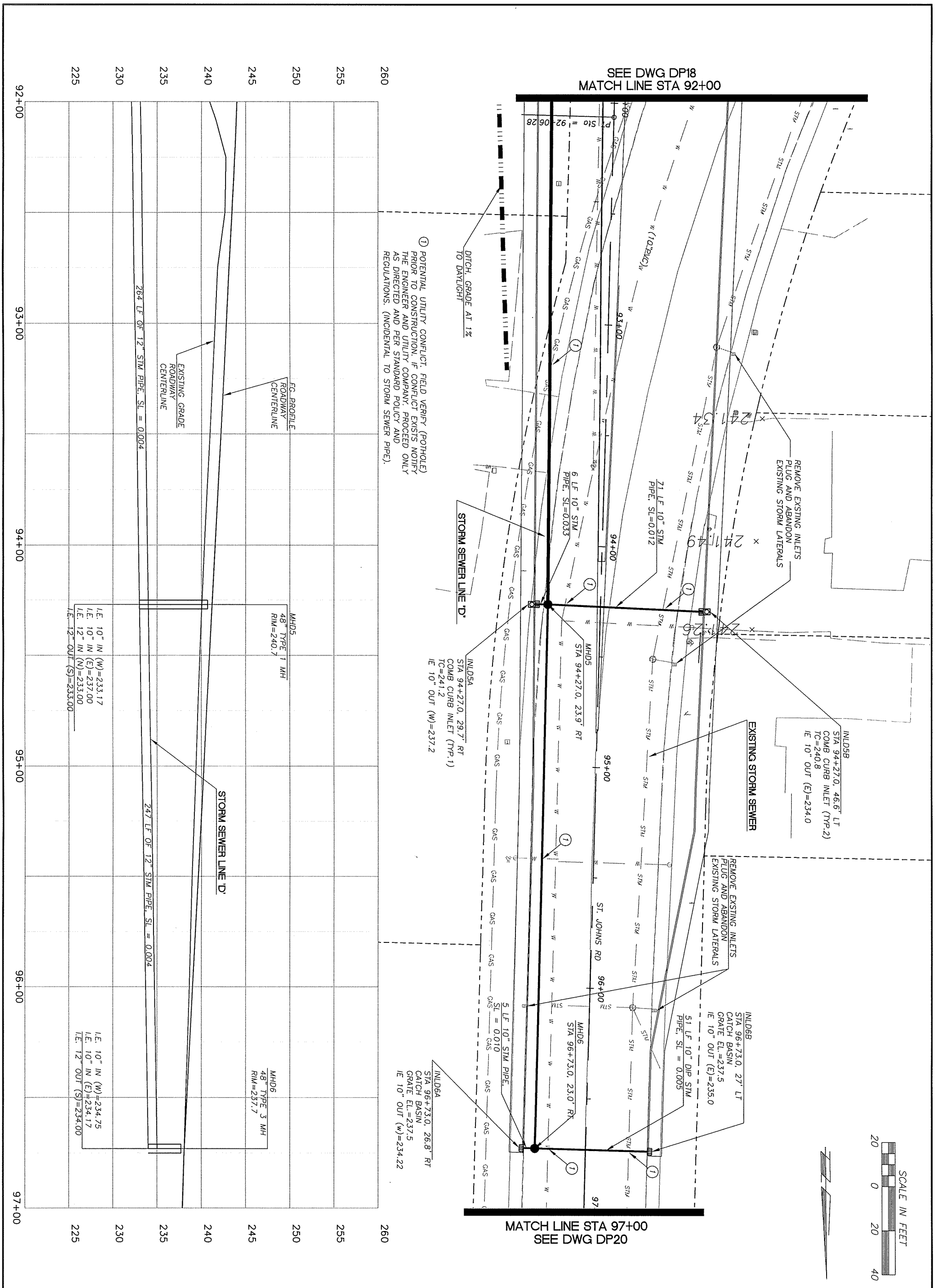

proud past, promising future

CLARK COUNTY WASHINGTON

DESIGN & ENGINEERING DIVISION
DESIGN SECTION

ST. JOHNS RD (NE 50TH TO NE 72ND)
DRAINAGE PLAN (STA 92+00 TO 97+00)

JOHN MILNE STATE OF WASHINGTON 31148 REGISTERED PROFESSIONAL ENGINEER
EXPIRES: JULY 7, 2003

CALL 48 HOURS BEFORE YOU DIG
1-800-553-4344
"It's the Law"
NORTHWEST UTILITIES NOTIFICATION CENTER

DESIGNED	MME/JM
DRAWN	BAK
CRP	301422
HOR.	1"=20'
VERT.	1"=5'
DATE	3/31/04
DWG:	DP19
SHEET	OF

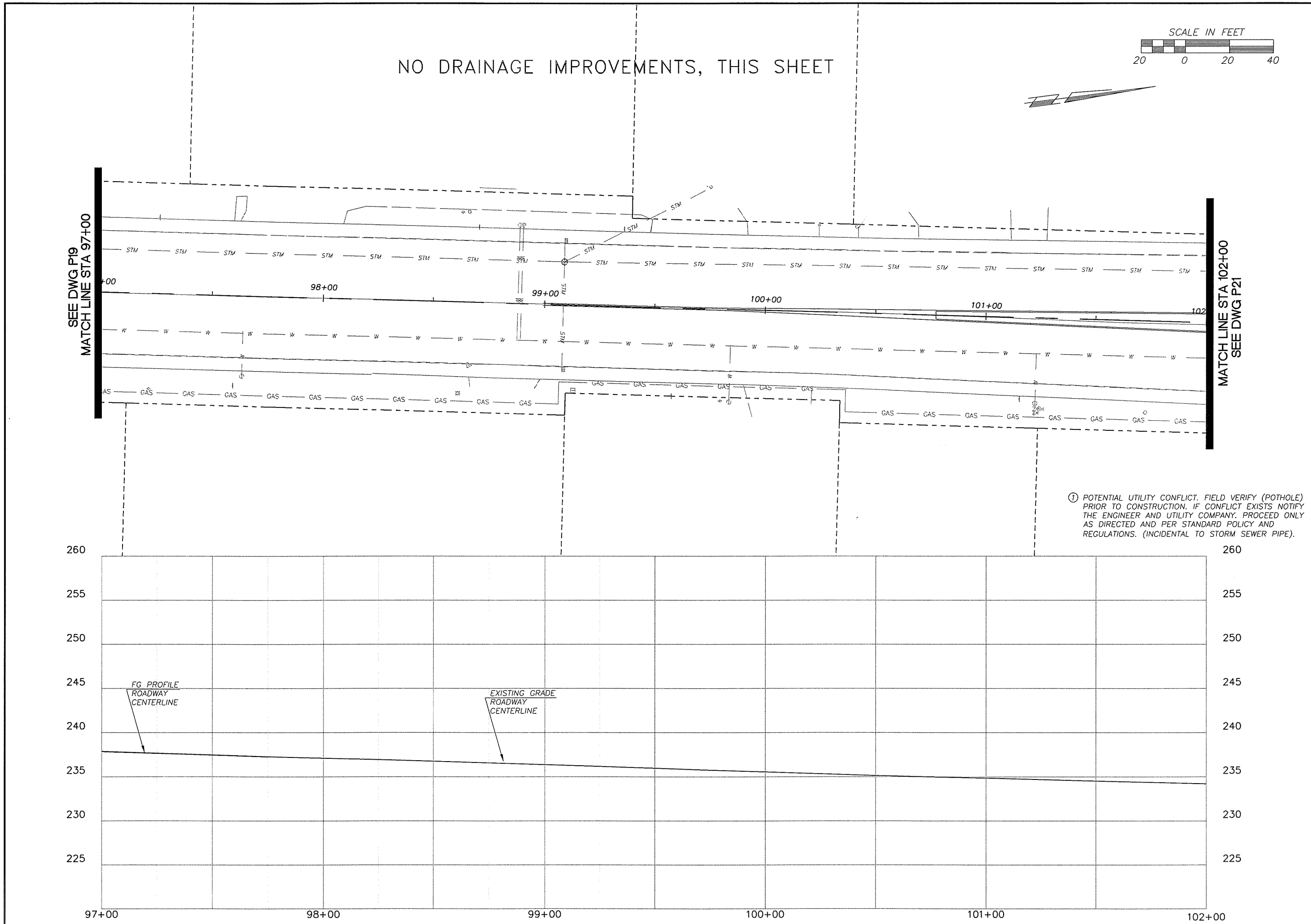

① POTENTIAL UTILITY CONFLICT. FIELD VERIFY (POTHOLE) PRIOR TO CONSTRUCTION. IF CONFLICT EXISTS NOTIFY THE ENGINEER AND UTILITY COMPANY. PROCEED ONLY AS DIRECTED AND PER STANDARD POLICY AND REGULATIONS. (INCIDENTAL TO STORM SEWER PIPE).

DESIGNED MME/JM
DRAWN BAK
CRP 301422
HOR. 1"=20'
VERT. 1"=5'
DATE 3/31/04
DWG: DP20
SHEET OF

CALL 48 HOURS BEFORE YOU DIG
1-800-553-4344
"It's the Law"
NORTHWEST UTILITIES NOTIFICATION CENTER

JOHN MILNE
STATE OF WASHINGTON
31148
REGISTERED PROFESSIONAL ENGINEER
EXPIRES: JULY 7, 2003

DESIGN & ENGINEERING DIVISION
DESIGN SECTION

ST. JOHNS RD (NE 50TH TO NE 72ND)
DRAINAGE PLAN (STA 97+00 TO 102+00)

proud past, promising future
CLARK COUNTY
WASHINGTON

N:\CIP\PROJECTS\301422-STJohns-50thTo72nd\DESIGN\DWGS\DP20.dwg, 3/24/2004 11:06:42 AM, kerlinr

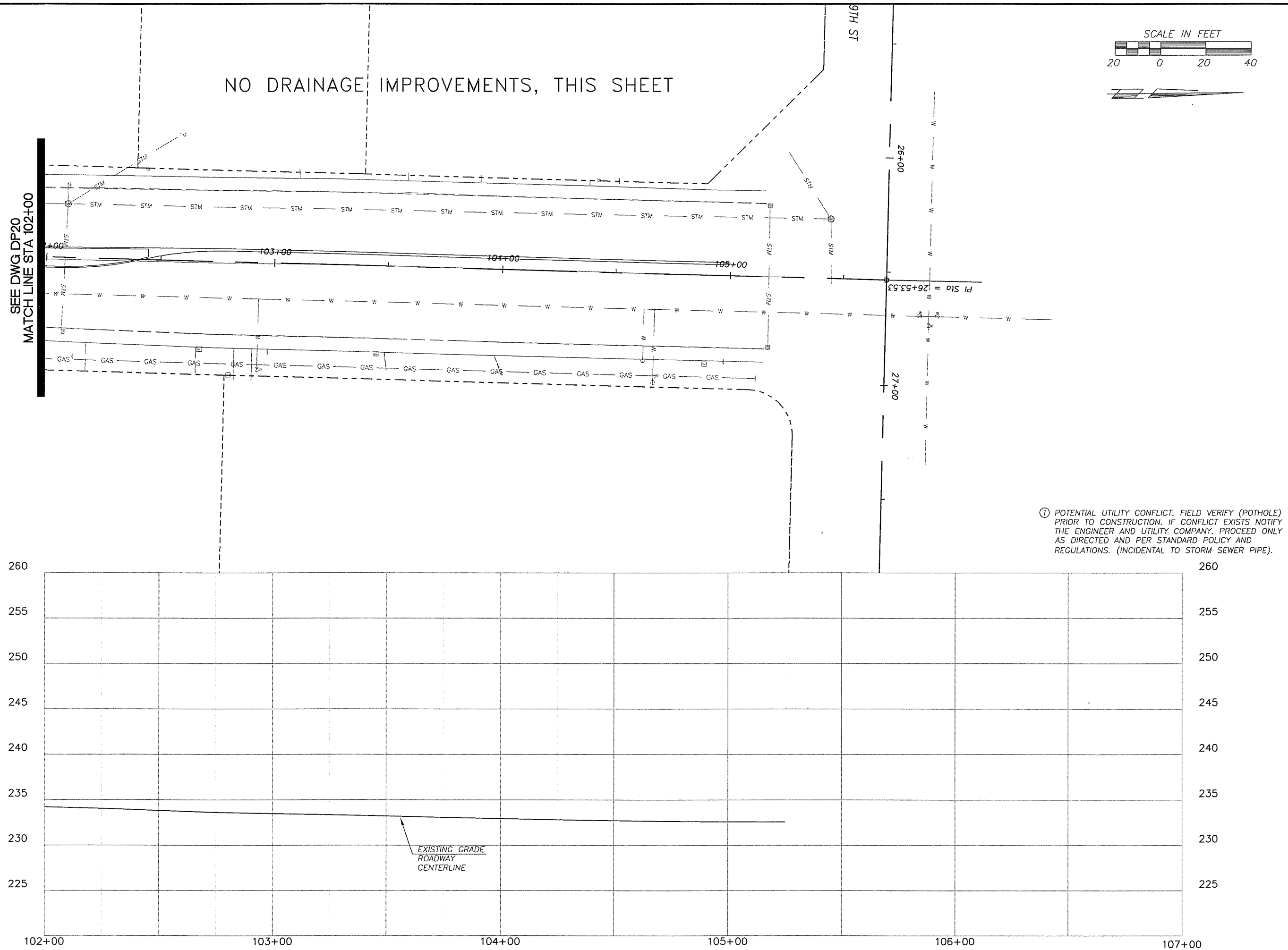

① POTENTIAL UTILITY CONFLICT. FIELD VERIFY (POTHOLE) PRIOR TO CONSTRUCTION. IF CONFLICT EXISTS NOTIFY THE ENGINEER AND UTILITY COMPANY. PROCEED ONLY AS DIRECTED AND PER STANDARD POLICY AND REGULATIONS. (INCIDENTAL TO STORM SEWER PIPE).

DESIGNED MME/JM
DRAWN BAK
CRP 301422
HOR. 1"=20'
VERT. 1"=5'
DATE 3/31/04
DWG: DP21
SHEET OF

CALL 48 HOURS BEFORE YOU DIG
1-800-553-4344
"It's the Law"
NORTHWEST UTILITIES NOTIFICATION CENTER

JOHN MILNE
STATE OF WASHINGTON
31148
REGISTERED PROFESSIONAL ENGINEER
EXPIRES: JULY 7, 2003

DESIGN & ENGINEERING DIVISION
DESIGN SECTION

ST. JOHNS RD (NE 50TH TO NE 72ND)
DRAINAGE PLAN (STA 102+00 TO E.O.P.)

proud past, promising future
CLARK COUNTY
WASHINGTON

N:\CIP\PROJECTS\301422-STJohns-50thTo72nd\DESIGN\DWGS\DP21.dwg, 3/24/2004 11:07:44 AM, kerlinr

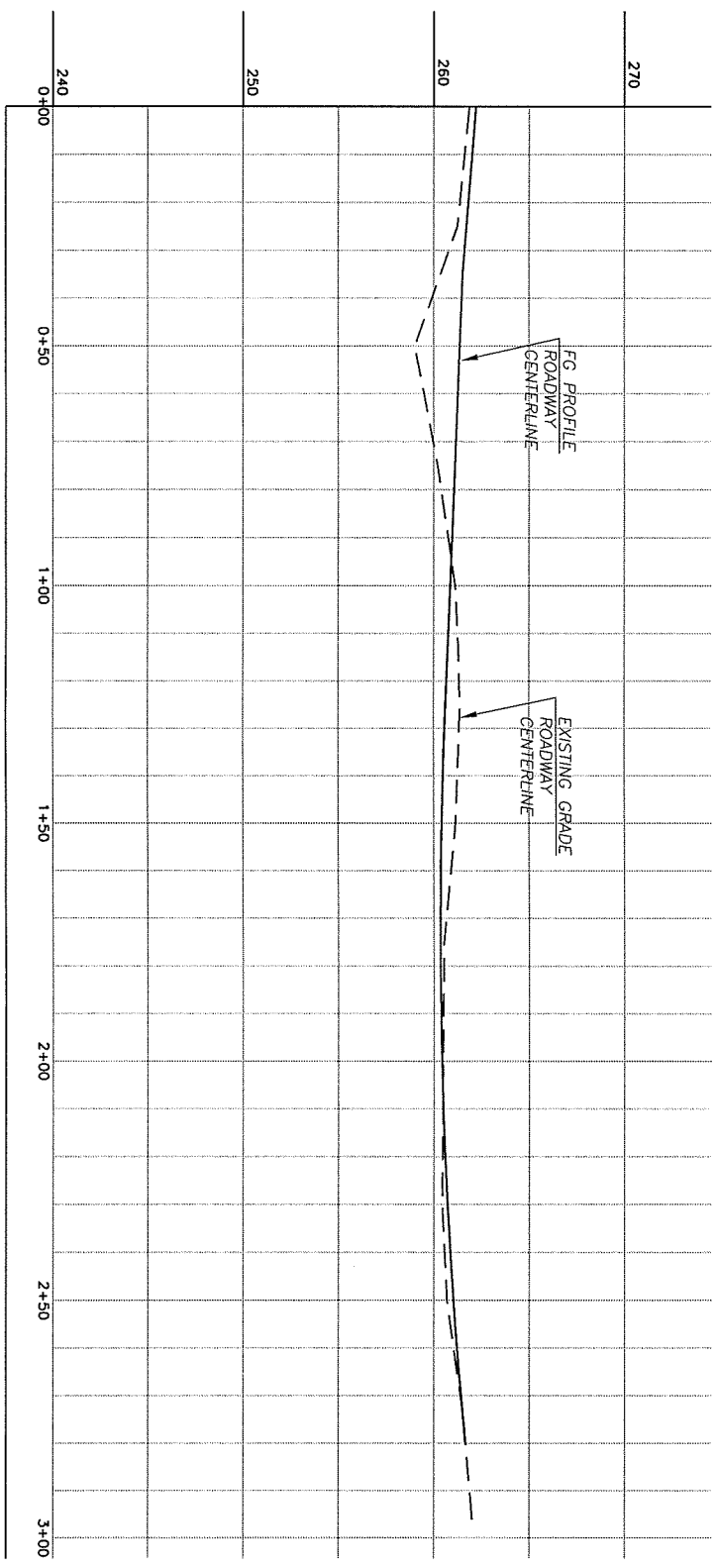

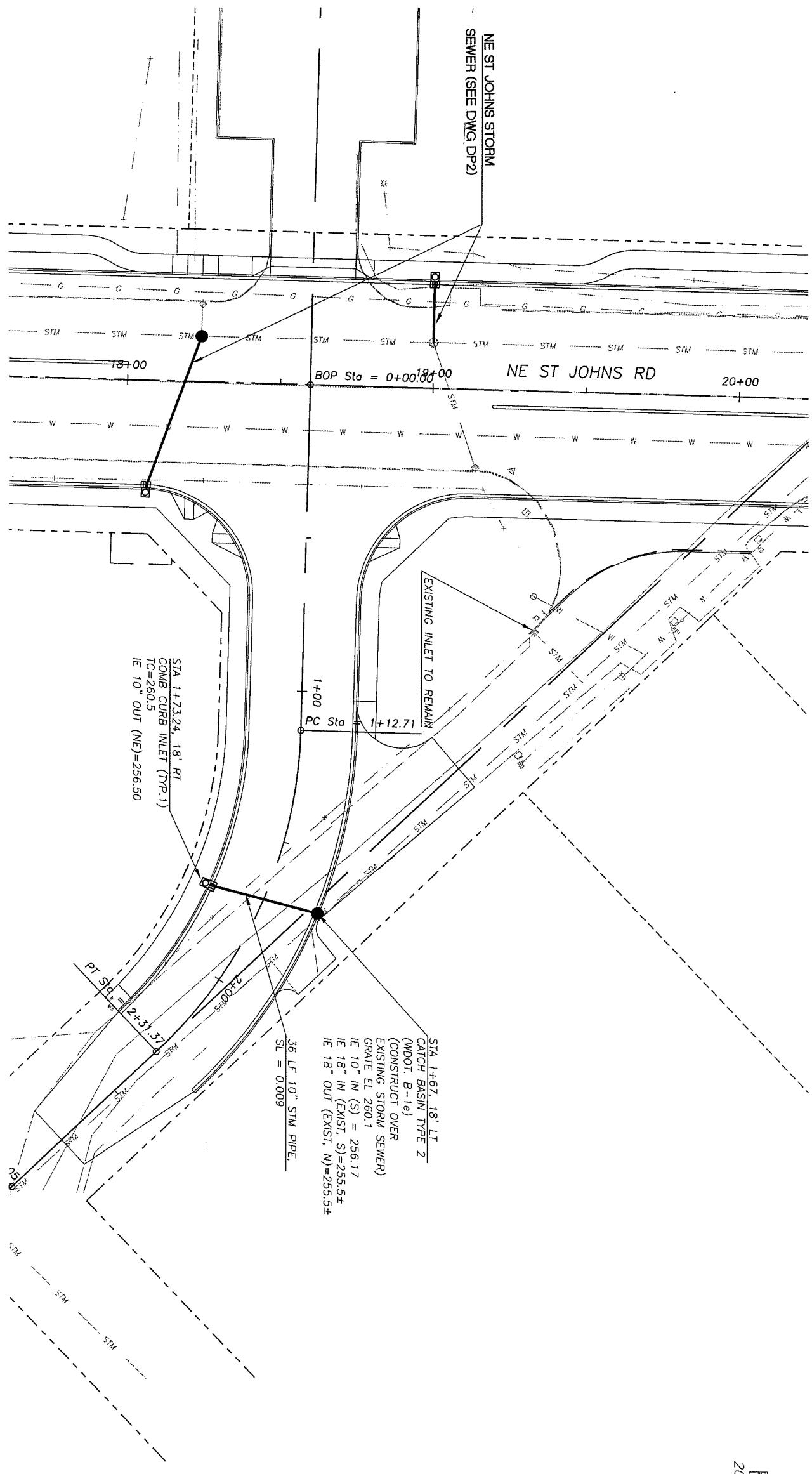

CLARK COUNTY
WASHINGTON
proud past, promising future

DESIGN & ENGINEERING DIVISION
DESIGN SECTION

ST. JOHNS RD (NE 50TH TO NE 72ND)
DRAINAGE PLAN (STA 0+00 TO 3+00)

JOHN MILNE
STATE OF WASHINGTON
31148
REGISTERED
PROFESSIONAL ENGINEER
EXPIRES:JULY 7, 2003

CALL 48 HOURS
BEFORE YOU DIG
1-800-
553-4344
"It's the Law"
NORTHWEST
UTILITIES
NOTIFICATION CENTER

DESIGNED	MME/JM
DRAWN	BAK
CRP	301422
HOR.	1"=20'
VERT.	1"=5'
DATE	3/31/04
DWG:	DP22
SHEET	OF

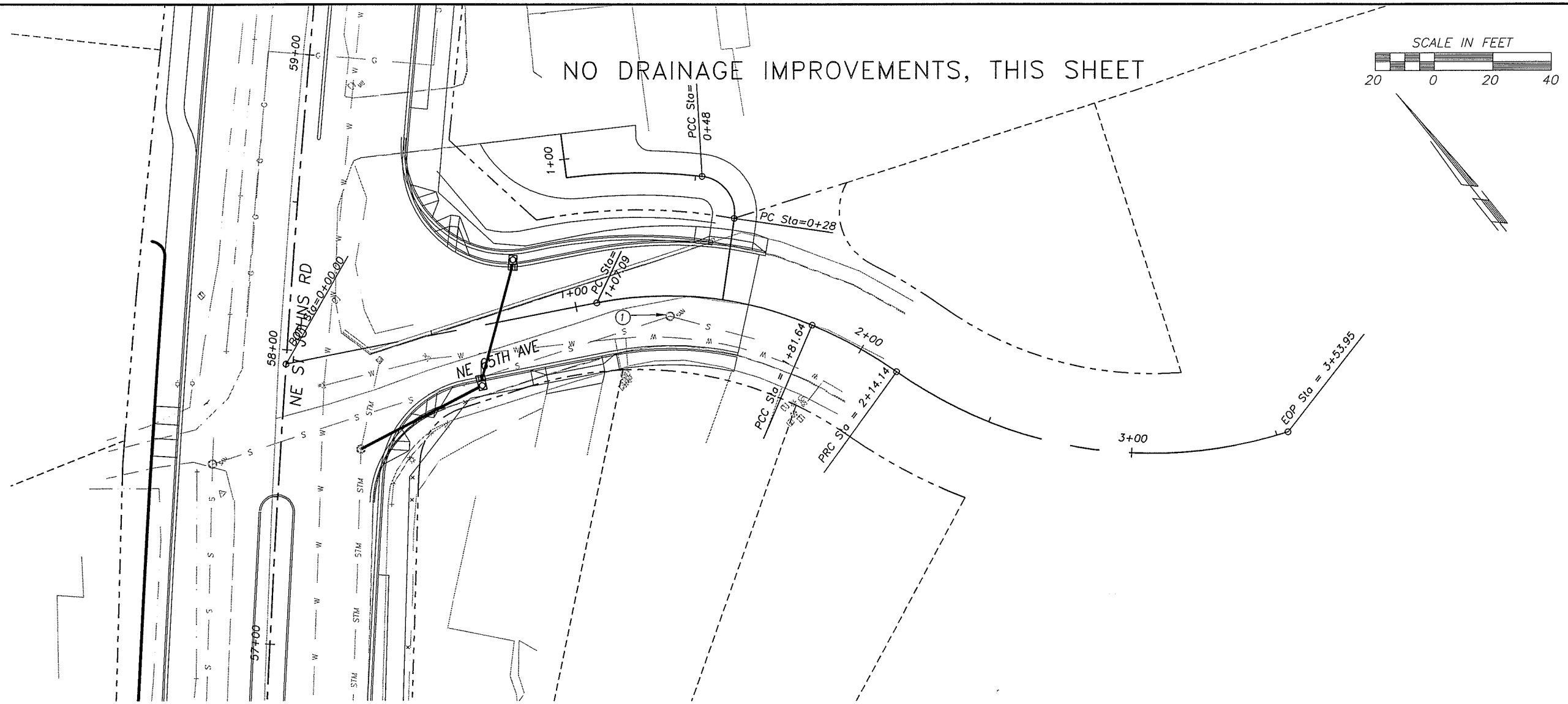

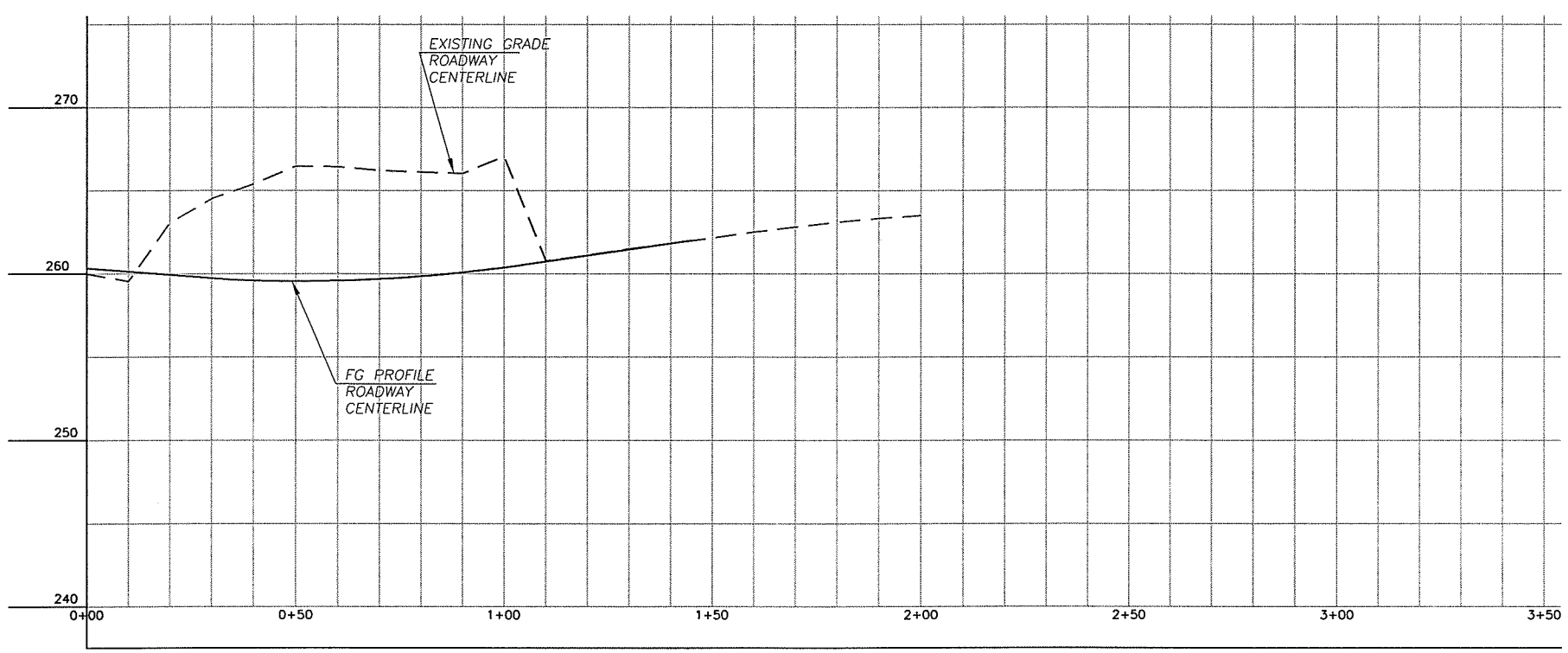

DESIGNED MME/JM
DRAWN BAK
CRP 301422
HOR. 1"=20'
VERT. 1"=5'
DATE 3/31/04
DWG: DP23
SHEET OF

CALL 48 HOURS BEFORE YOU DIG
1-800-553-4344
"It's the Law"
NORTHWEST UTILITIES NOTIFICATION CENTER

JOHN MILNE
STATE OF WASHINGTON
31148
REGISTERED PROFESSIONAL ENGINEER
EXPIRES JULY 7, 2003

DESIGN & ENGINEERING DIVISION
DESIGN SECTION

ST. JOHNS RD (NE 50TH TO NE 72ND)
DRAINAGE PLAN (STA 0+00 TO 3+00)

proud past, promising future
CLARK COUNTY
WASHINGTON

N:\CIP\PROJECTS\301422-STJohns-50thTo72nd\DESIGN\DWGS\DP23.dwg, 3/24/2004 11:08:42 AM, kerlinr

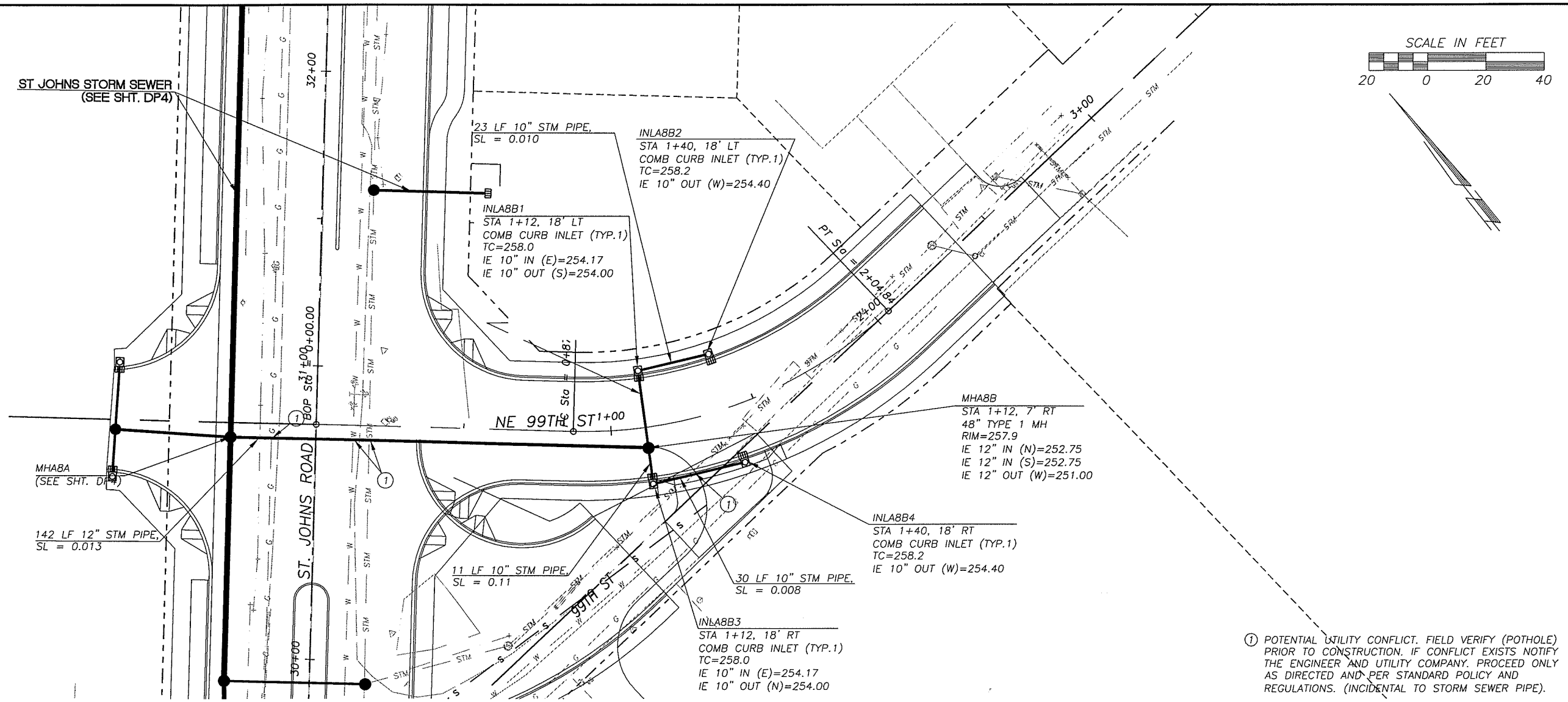

① POTENTIAL UTILITY CONFLICT. FIELD VERIFY (POTHOLE) PRIOR TO CONSTRUCTION. IF CONFLICT EXISTS NOTIFY THE ENGINEER AND UTILITY COMPANY. PROCEED ONLY AS DIRECTED AND PER STANDARD POLICY AND REGULATIONS. (INCIDENTAL TO STORM SEWER PIPE).

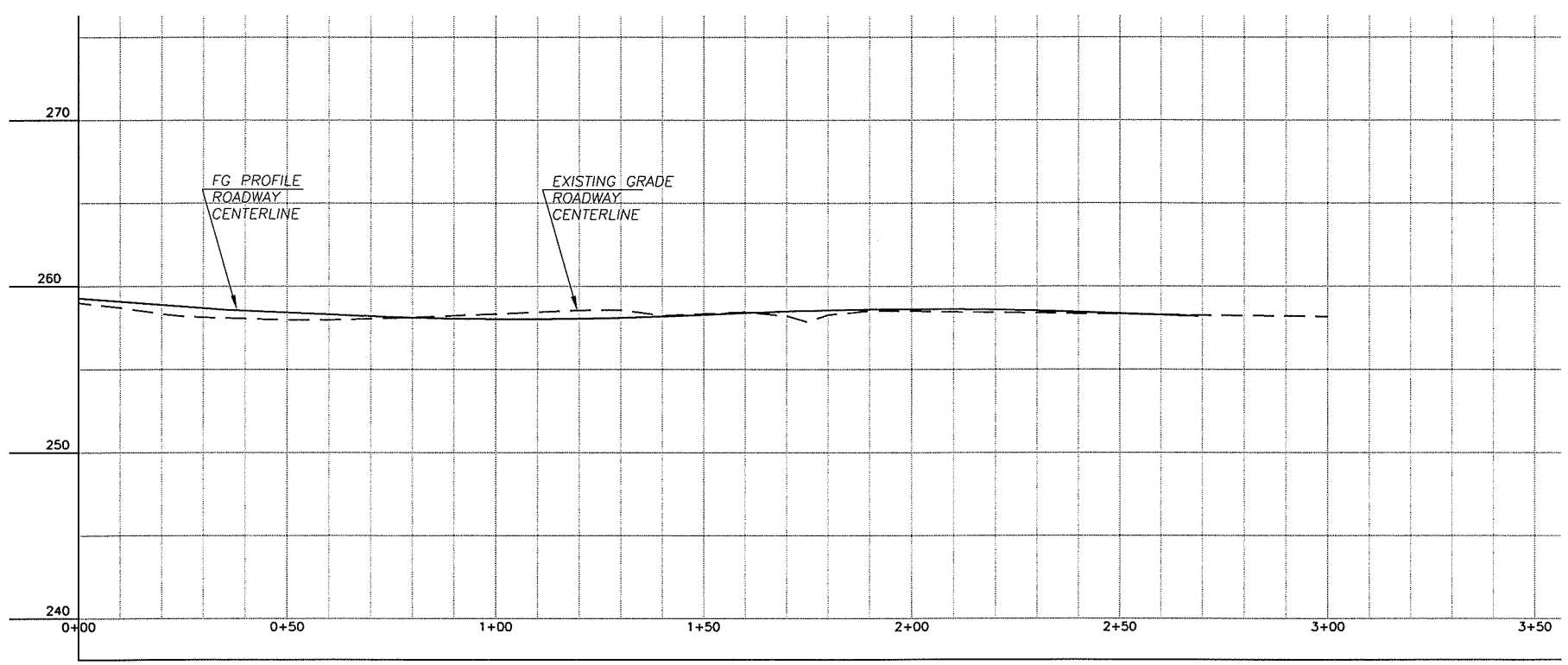

DESIGNED	MME/JM
DRAWN	BAK
CRP	301422
HOR.	1"=20'
VERT.	1"=5'
DATE	3/31/04
DWG.	DP24
SHEET	OF

CALL 48 HOURS BEFORE YOU DIG 1-800-553-4344 "It's the Law" NORTHWEST UTILITIES NOTIFICATION CENTER

STATE OF WASHINGTON MICHAEL E. MCCLAIN 31148 REGISTERED PROFESSIONAL ENGINEER EXPIRES JULY 7, 2003

DESIGN & ENGINEERING DIVISION
DESIGN SECTION

ST. JOHNS RD (NE 50TH TO NE 72ND)
DRAINAGE PLAN (STA 0+00 TO 3+00)

proud past, promising future
CLARK COUNTY WASHINGTON

N:\CIP\PROJECTS\301422-STJohns-50thTo72nd\DESIGN\DWG\DP24.dwg, 3/24/2004 11:09:08 AM, kerlinr

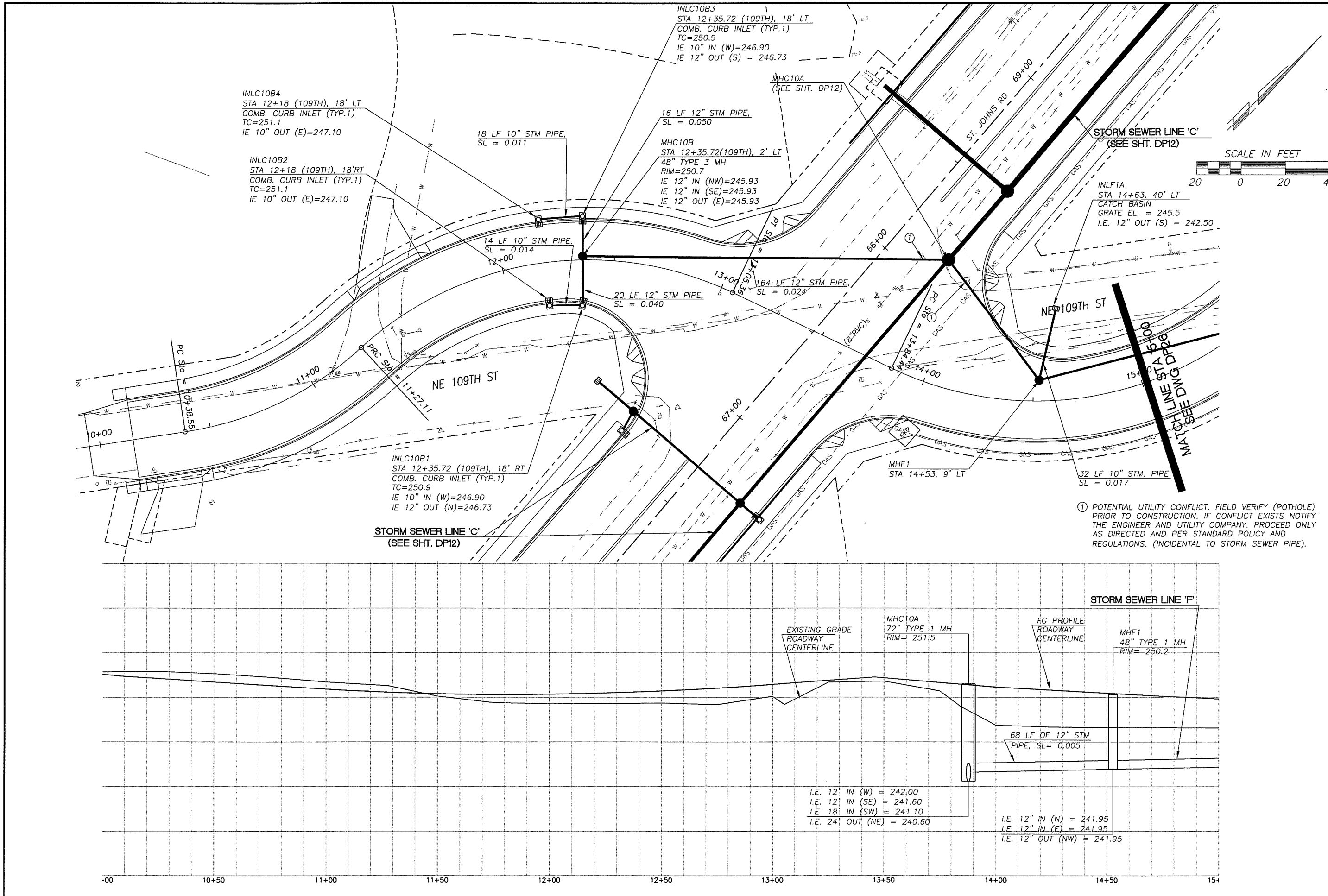

① POTENTIAL UTILITY CONFLICT. FIELD VERIFY (POTHOLE) PRIOR TO CONSTRUCTION. IF CONFLICT EXISTS NOTIFY THE ENGINEER AND UTILITY COMPANY. PROCEED ONLY AS DIRECTED AND PER STANDARD POLICY AND REGULATIONS. (INCIDENTAL TO STORM SEWER PIPE).

DESIGNED	MME/JM
DRAWN	BAK
CRP	301422
HOR.	1"=20'
VERT.	1"=5'
DATE	3/31/04
DWG:	DP25
SHEET	OF

CALL 48 HOURS BEFORE YOU DIG
1-800-553-4344
"It's the Law"
NORTHWEST UTILITIES NOTIFICATION CENTER

JOHN MILNE
STATE OF WASHINGTON
31148
REGISTERED PROFESSIONAL ENGINEER
EXPIRES JULY 7, 2003

DESIGN & ENGINEERING DIVISION
DESIGN SECTION

ST. JOHNS RD (NE 50TH TO NE 72ND)
DRAINAGE PLAN (STA 10+00 TO 15+00)

proud past, promising future
CLARK COUNTY
WASHINGTON

N:\CIP\PROJECTS\301422-STJohns-50thTo72nd\DESIGN\DWGS\DP25.dwg, 3/24/2004 11:09:33 AM, kerlinr

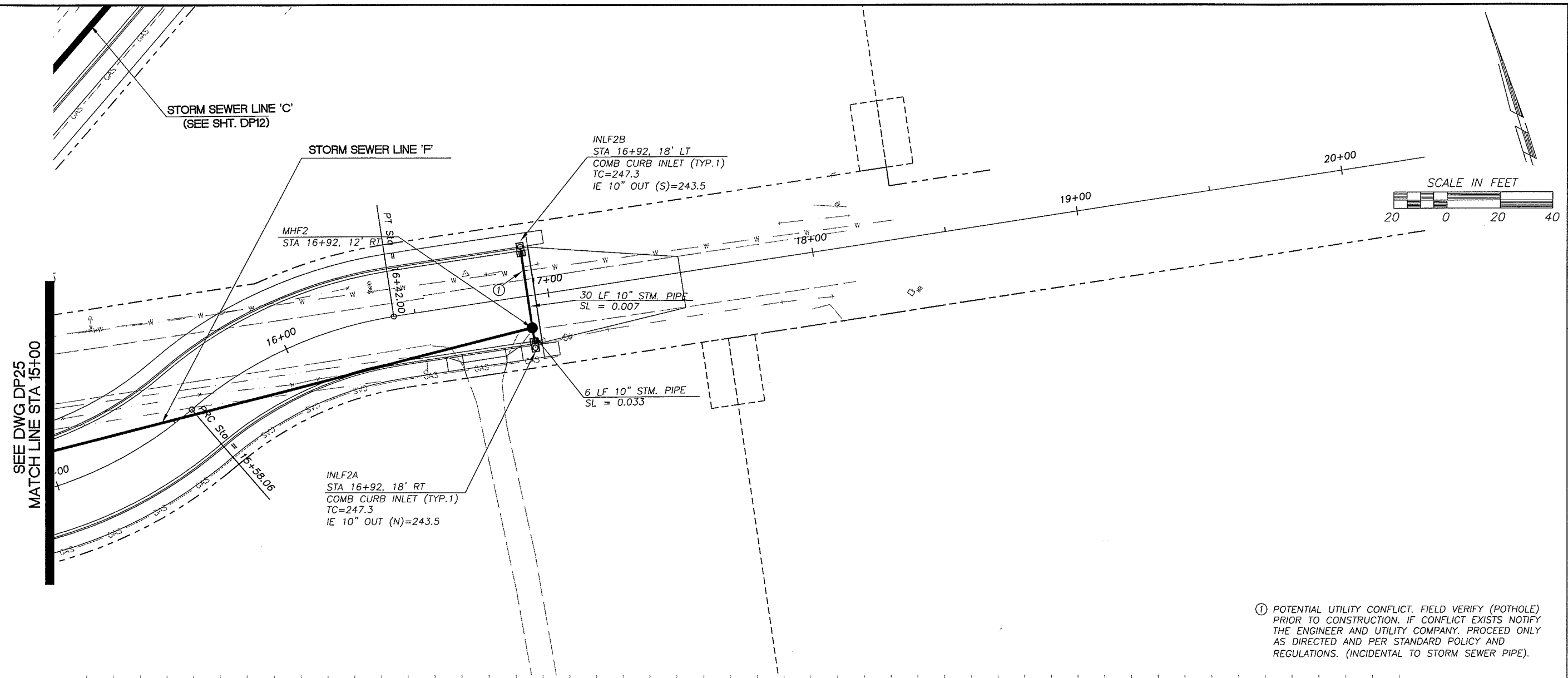

① POTENTIAL UTILITY CONFLICT. FIELD VERIFY (POTHOLE) PRIOR TO CONSTRUCTION. IF CONFLICT EXISTS NOTIFY THE ENGINEER AND UTILITY COMPANY. PROCEED ONLY AS DIRECTED AND PER STANDARD POLICY AND REGULATIONS. (INCIDENTAL TO STORM SEWER PIPE).

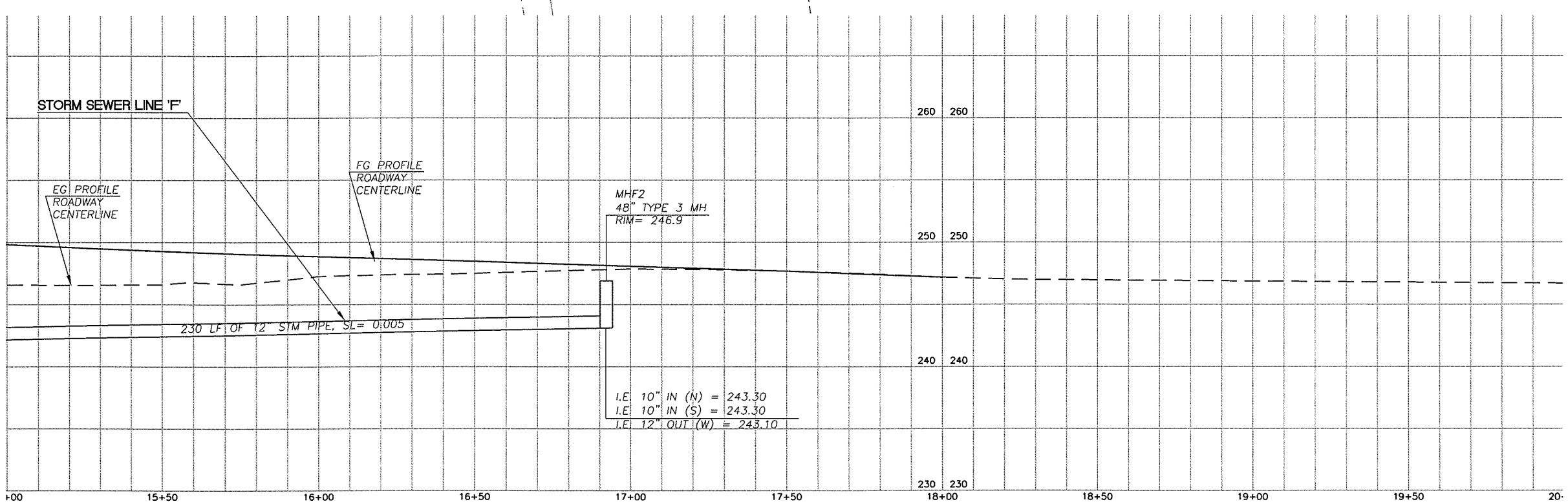

DESIGNED	MME/JM
DRAWN	BAK
CRP	301422
HOR.	1"=20'
VERT.	1"=5'
DATE	3/31/04
DWG:	DP26
SHEET	OF

CALL 48 HOURS BEFORE YOU DIG
1-800-553-4344
"It's the Law"
NORTHWEST UTILITIES NOTIFICATION CENTER

STATE OF WASHINGTON
MARK E. MCCOLLOUGH
31148
REGISTERED PROFESSIONAL ENGINEER
EXPIRES JULY 7, 2003

DESIGN & ENGINEERING DIVISION
DESIGN SECTION

ST. JOHNS RD (NE 50TH TO NE 72ND)
DRAINAGE PLAN (STA 15+00 TO 18+00)

proud past, promising future
CLARK COUNTY
WASHINGTON

N:\CIP\PROJECTS\301422-STJohns-50thTo72nd\DESIGN\DWGS\DP26.dwg, 3/24/2004 11:10:02 AM, kerlinr

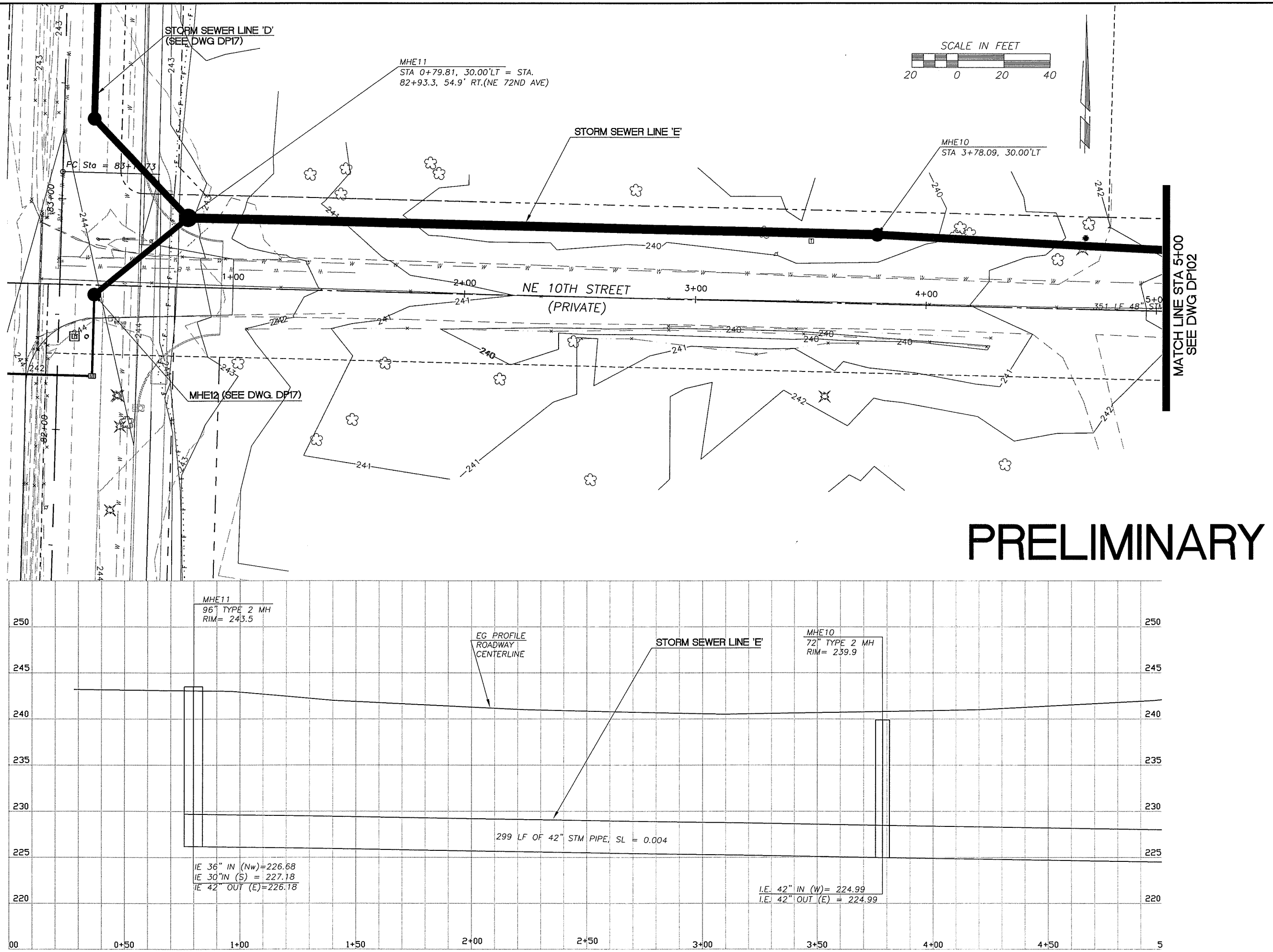

DESIGNED JM
DRAWN RK
CRP 301422
HOR. 1"=20'
VERT. 1"=5'
DATE 3/31/04
DWG: DP101
SHEET OF

CALL 48 HOURS BEFORE YOU DIG
1-800-553-4344
"It's the Law"
NORTHWEST UTILITIES NOTIFICATION CENTER

STATE OF WASHINGTON
31148
REGISTERED PROFESSIONAL ENGINEER
EXPIRES JULY 7, 2003

DESIGN & ENGINEERING DIVISION
DESIGN SECTION

ST. JOHNS RD; DRAINAGE PLAN
NE 110TH STREET (STA 0+00 TO STA 5+00)

proud past, promising future
CLARK COUNTY
WASHINGTON

N:\CIP\PROJECTS\301422-STJohns-50thTo72nd\DESIGN\DWG\SDP101.dwg, 3/24/2004 11:23:55 AM, kerlinr

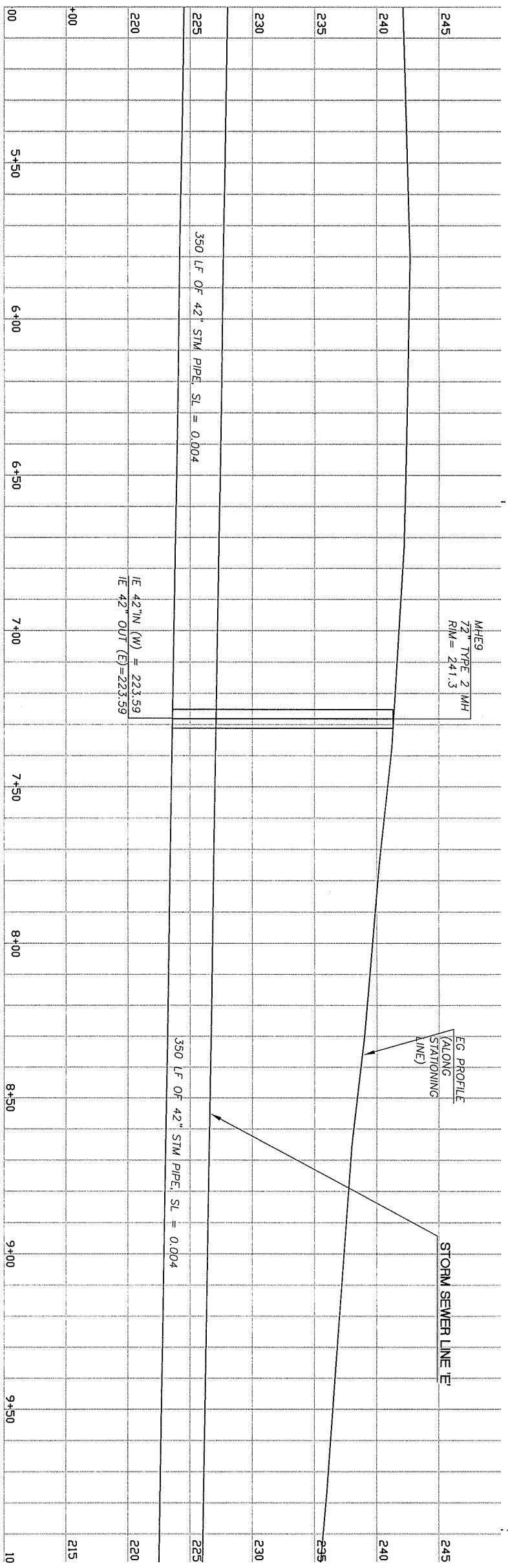

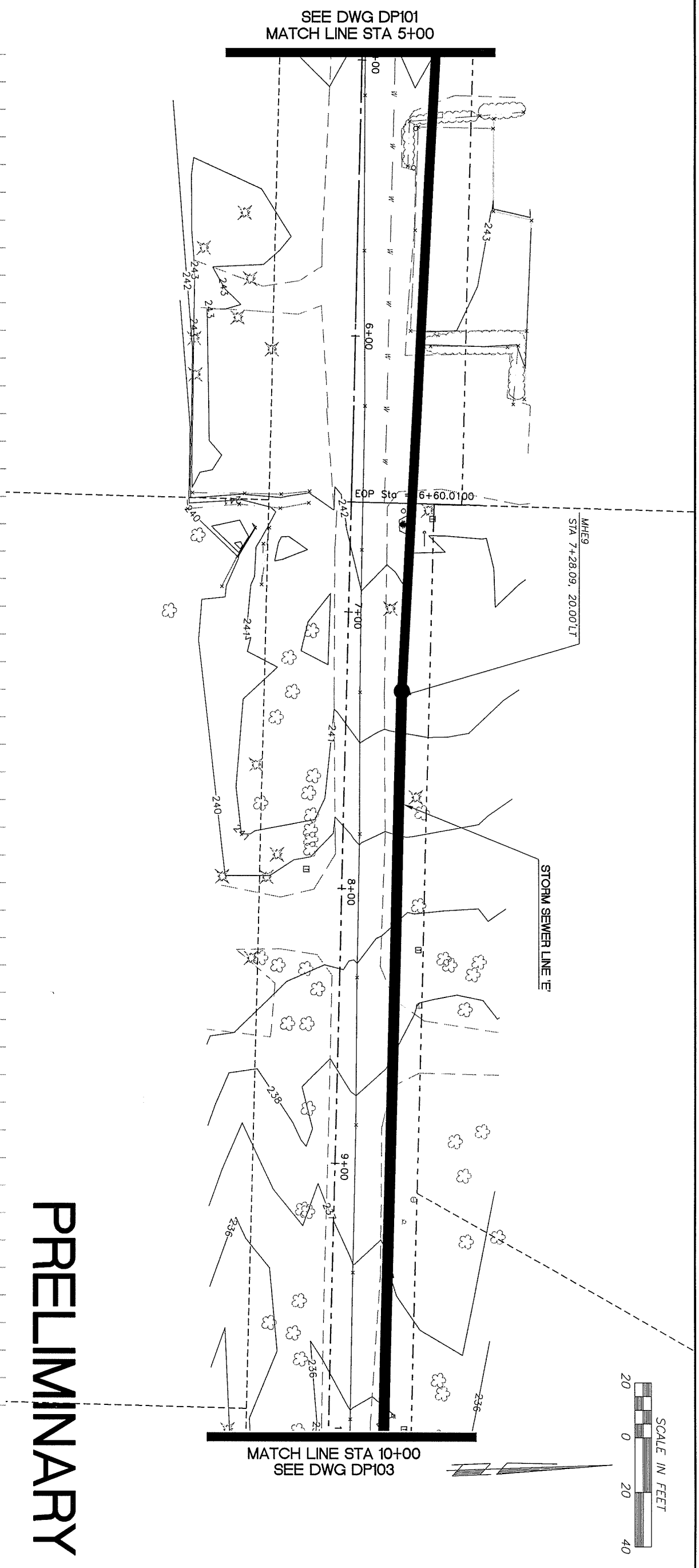

PRELIMINARY

proud past, promising future

CLARK COUNTY
WASHINGTON

DESIGN & ENGINEERING DIVISION
DESIGN SECTION

ST. JOHNS RD; DRAINAGE PLAN
NE 110TH STREET (STA 5+00 TO STA 10+00)

JOHN MILNE
STATE OF WASHINGTON
31148
REGISTERED PROFESSIONAL ENGINEER
EXPIRES:JULY 7, 2003

CALL 48 HOURS BEFORE YOU DIG
1-800-553-4344
"It's the Law"
NORTHWEST UTILITIES NOTIFICATION CENTER

DESIGNED	JM
DRAWN	RK
CRP	301422
HOR.	1"=20'
VERT.	1"=5'
DATE	3/31/04
DWG:	DP102
SHEET	OF

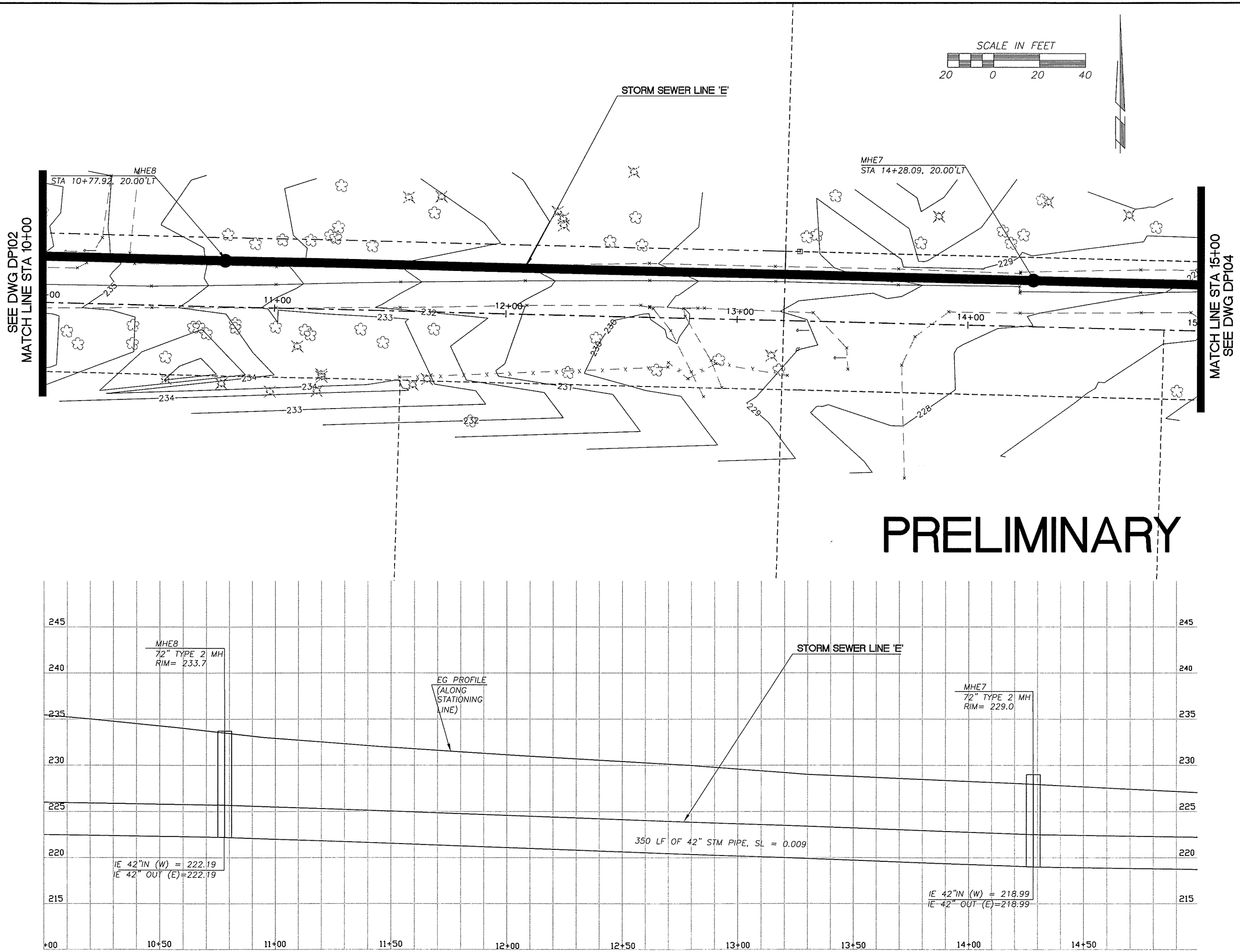

DESIGNED JM
DRAWN RK
CRP 301422
HOR. 1"=20'
VERT. 1"=5'
DATE 3/31/04
DWG: DP103
SHEET OF

CALL 48 HOURS BEFORE YOU DIG
1-800-553-4344
"It's the Law"
NORTHWEST UTILITIES NOTIFICATION CENTER

JOHN MILLINE
STATE OF WASHINGTON
31148
REGISTERED PROFESSIONAL ENGINEER
EXPIRES: JULY 7, 2003

DESIGN & ENGINEERING DIVISION
DESIGN SECTION

ST. JOHNS RD; DRAINAGE PLAN
NE 110TH STREET (STA 10+00 TO STA 15+00)

proud past, promising future
CLARK COUNTY
WASHINGTON

N:\CIP\PROJECTS\301422-STJohns-50thTo72nd\DESIGN\DWGS\DP103.dwg, 3/24/2004 11:25:21 AM, kerlinr

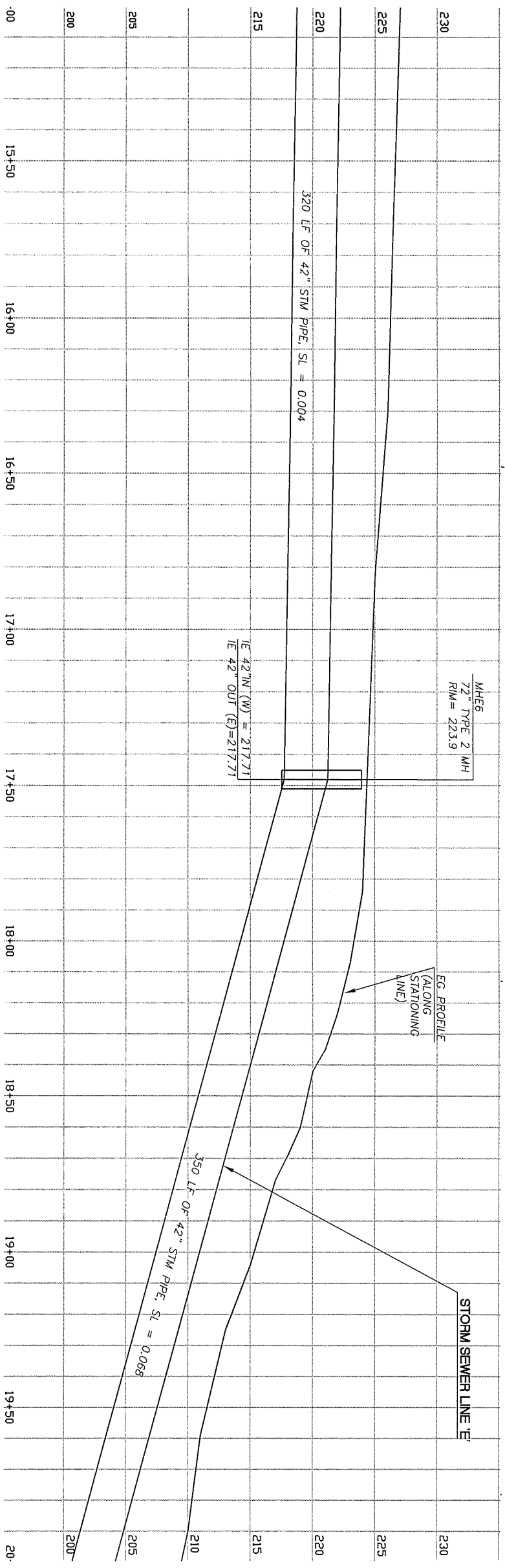

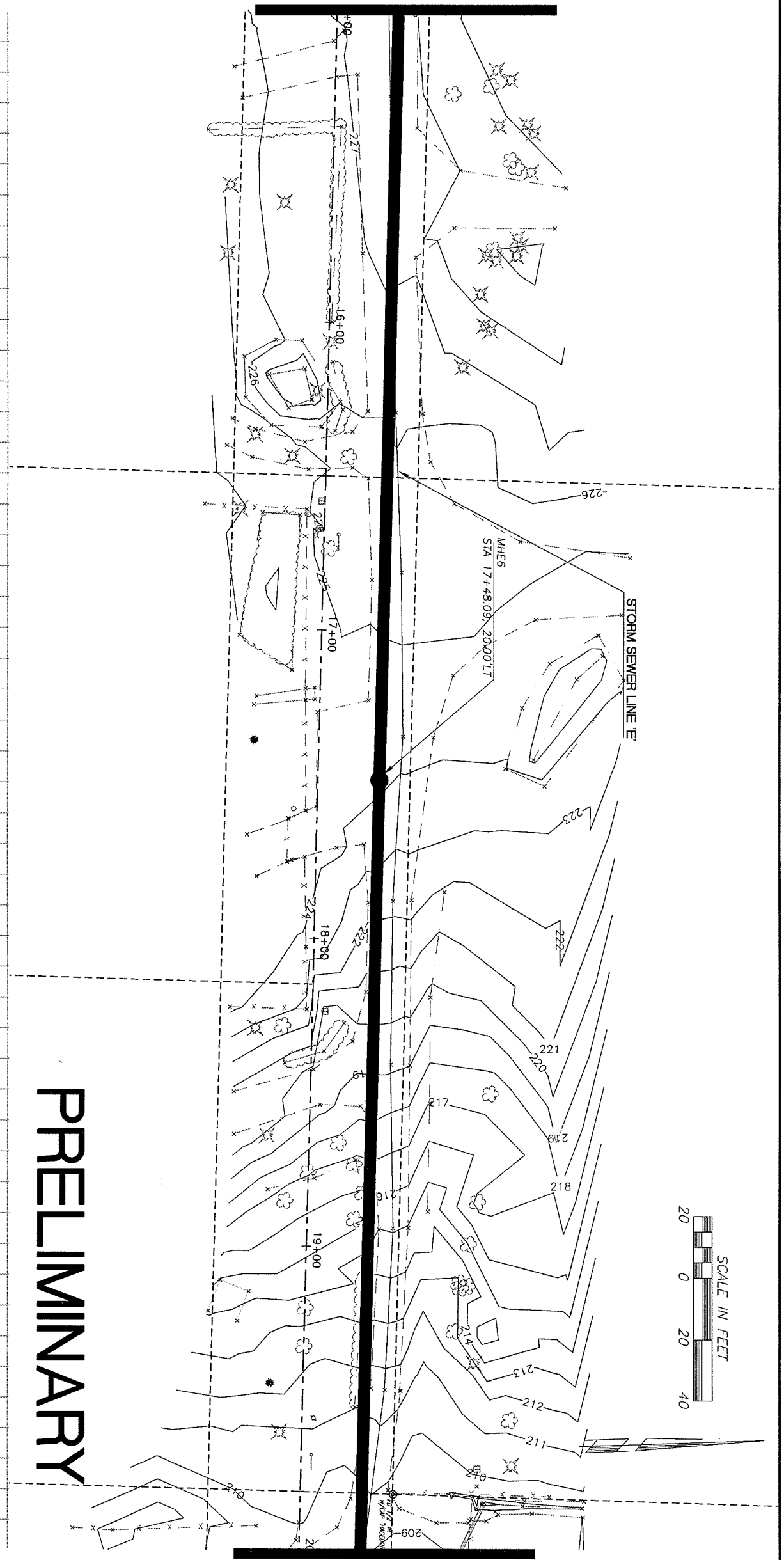

PRELIMINARY

proud past, promising future

CLARK COUNTY
WASHINGTON

DESIGN & ENGINEERING DIVISION
DESIGN SECTION

ST. JOHNS RD: DRAINAGE PLAN
NE 110TH STREET (STA 15+00 TO STA 20+00)

JOHN MILNE, STATE OF WASHINGTON, 31148, REGISTERED PROFESSIONAL ENGINEER
EXPIRES:JULY 7, 2003

CALL 48 HOURS BEFORE YOU DIG
1-800-553-4344
"It's the Law"
NORTHWEST UTILITIES NOTIFICATION CENTER

DESIGNED	JM
DRAWN	RK
CRP	301422
HOR.	1"=20'
VERT.	1"=5'
DATE	3/31/04
DWG:	DP104
SHEET	OF

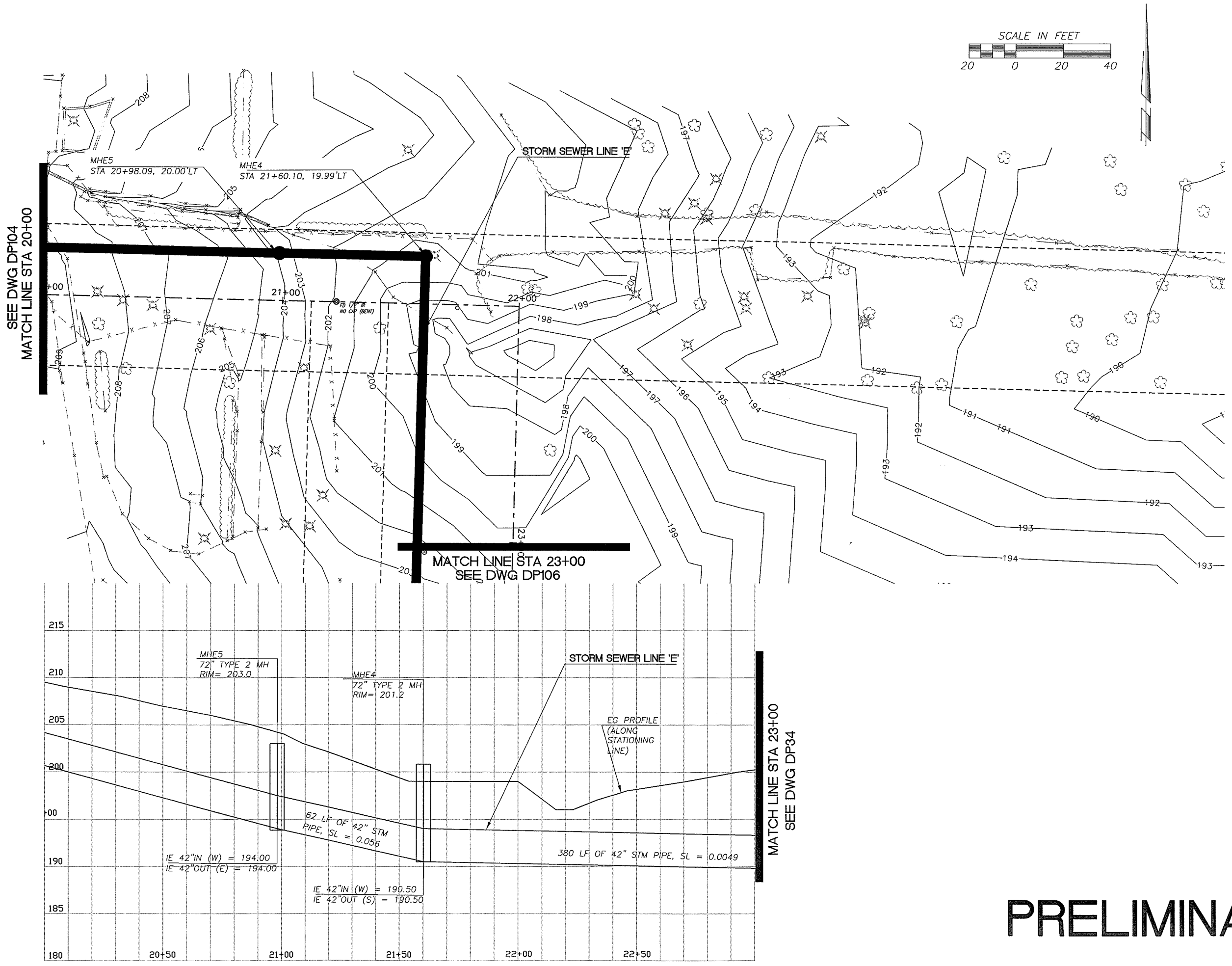

PRELIMINARY

DESIGNED	JM
DRAWN	RK
CRP	301422
HOR.	1"=20'
VERT.	1"=5'
DATE	3/31/04
DWG:	DP105
SHEET	OF

CALL 48 HOURS BEFORE YOU DIG
1-800-553-4344
"It's the Law"
NORTHWEST UTILITIES NOTIFICATION CENTER

STATE OF WASHINGTON
31148
REGISTERED PROFESSIONAL ENGINEER
EXPIRES JULY 7, 2003

DESIGN & ENGINEERING DIVISION
DESIGN SECTION

ST. JOHNS RD; DRAINAGE PLAN
NE 110TH STREET (STA 20+00 TO STA 23+00)

proud past, promising future
CLARK COUNTY
WASHINGTON

N:\CIP\PROJECTS\301422-STJohns-50thTo72nd\DESIGN\DWGS\DP105.dwg, 3/24/2004 11:27:13 AM, kerlinr

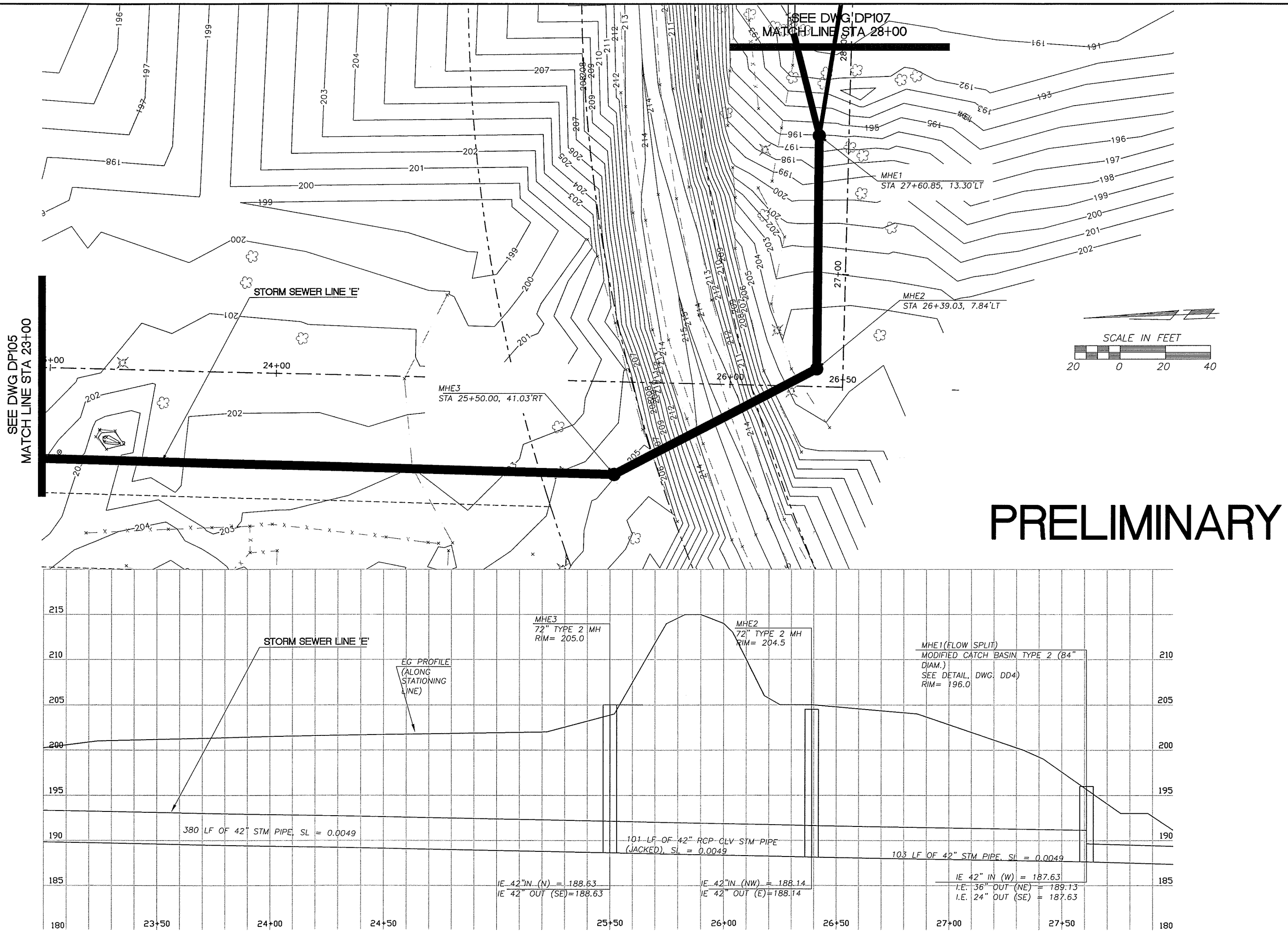

DESIGNED JM
DRAWN RK
CRP 301422
HOR. 1"=20'
VERT. 1"=5'
DATE 3/31/04
DWG: DP106
SHEET OF

CALL 48 HOURS BEFORE YOU DIG
1-800-553-4344
"It's the Law"
NORTHWEST UTILITIES NOTIFICATION CENTER

STATE OF WASHINGTON
NORTHWEST ENGINEERING
31148
REGISTERED PROFESSIONAL ENGINEER
EXPIRES JULY 7, 2003

DESIGN & ENGINEERING DIVISION
DESIGN SECTION

ST. JOHNS RD; DRAINAGE PLAN
NE 110TH STREET (STA 23+00 TO STA 28+00)

proud past, promising future
CLARK COUNTY
WASHINGTON

N:\CIP\PROJECTS\301422-STJohns-50thTo72nd\DESIGN\DWGS\DP106.dwg, 3/24/2004 11:28:31 AM, kerlinr

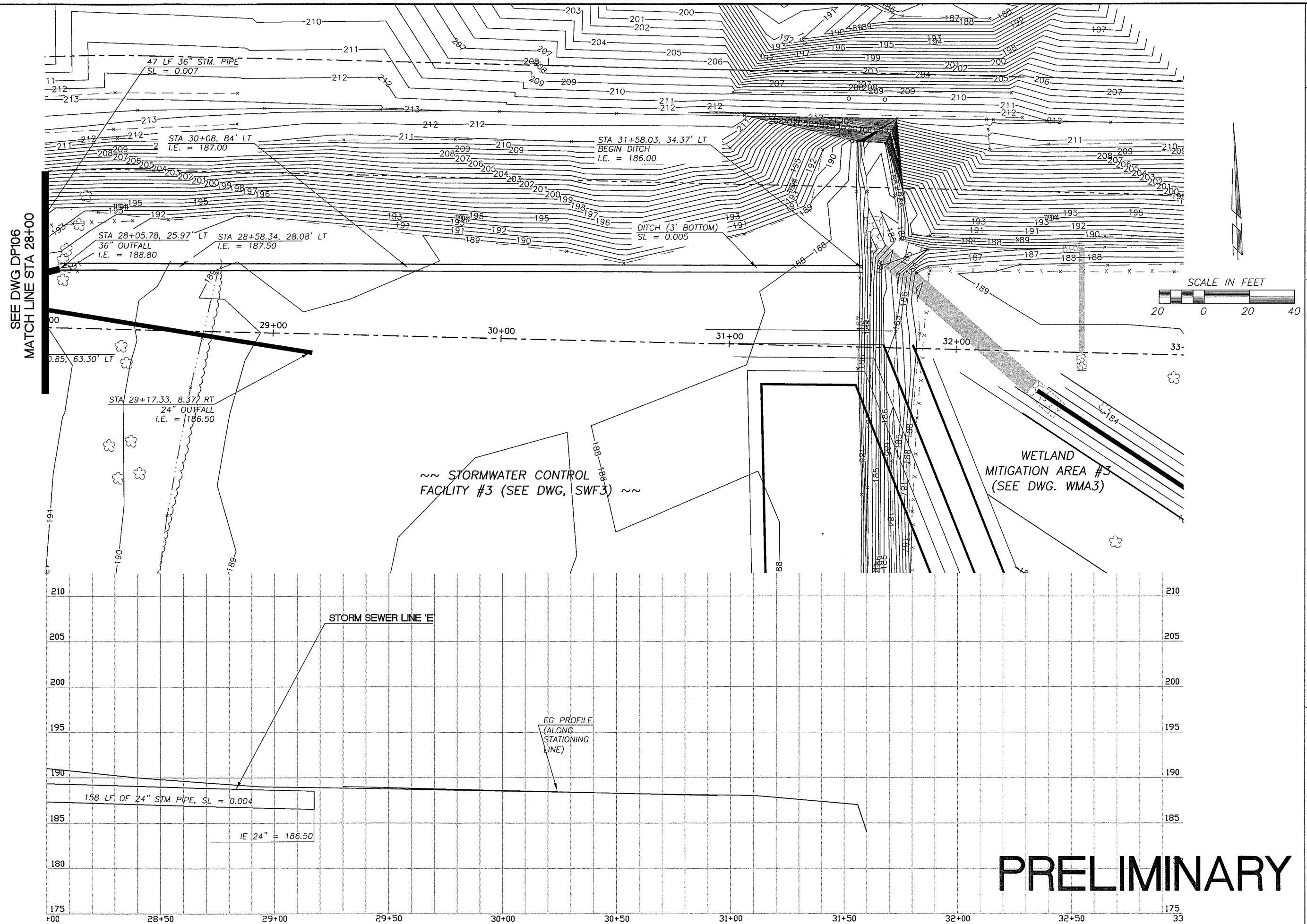

DESIGNED JM
DRAWN RK
CRP 301422
HOR. 1"=20'
VERT. 1"=5'
DATE 3/31/04
DWG: DP107
SHEET OF

CALL 48 HOURS BEFORE YOU DIG
1-800-553-4344
"It's the Law"
NORTHWEST UTILITIES NOTIFICATION CENTER

JOHN MILNE
STATE OF WASHINGTON
31148
REGISTERED PROFESSIONAL ENGINEER
EXPIRES JULY 7, 2003

DESIGN & ENGINEERING DIVISION
DESIGN SECTION

ST. JOHNS RD; DRAINAGE PLAN
NE 110TH STREET (STA 28+00 TO STA 33+00

proud past, promising future
CLARK COUNTY
WASHINGTON

N:\CIP\PROJECTS\301422-STJohns-50thTo72nd\DESIGN\DWGS\DP107.dwg, 3/24/2004 11:29:15 AM, kerlinr

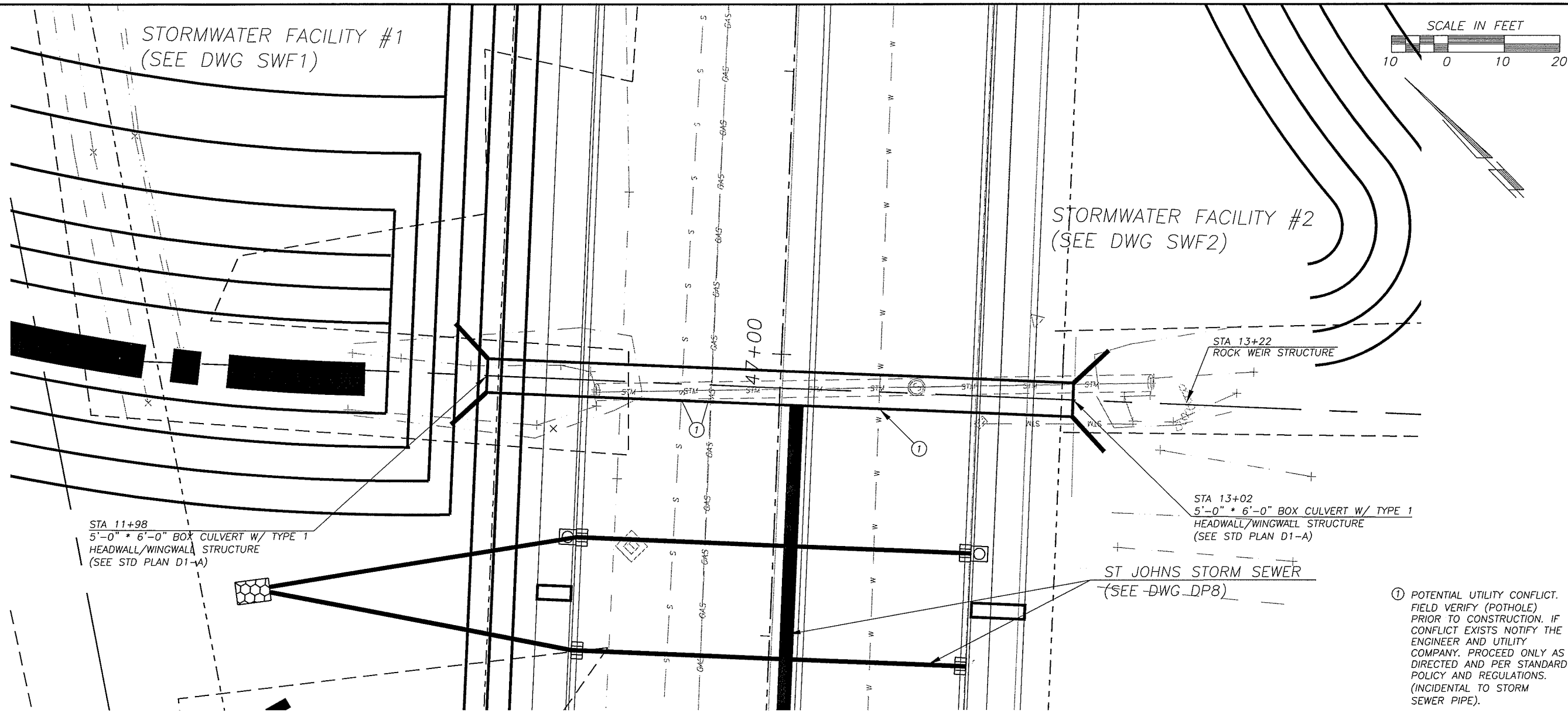

① POTENTIAL UTILITY CONFLICT. FIELD VERIFY (POTHOLE) PRIOR TO CONSTRUCTION. IF CONFLICT EXISTS NOTIFY THE ENGINEER AND UTILITY COMPANY. PROCEED ONLY AS DIRECTED AND PER STANDARD POLICY AND REGULATIONS. (INCIDENTAL TO STORM SEWER PIPE).

1. SEE SHT. SCD1 FOR ADDITIONAL INFORMATION AND DETAILS.

2. TRANSITION TO MATCH EXISTING STREAM CHANNEL 20' UPSTREAM AND DOWNSTREAM OF CULVERT OR WEIR STRUCTURE.

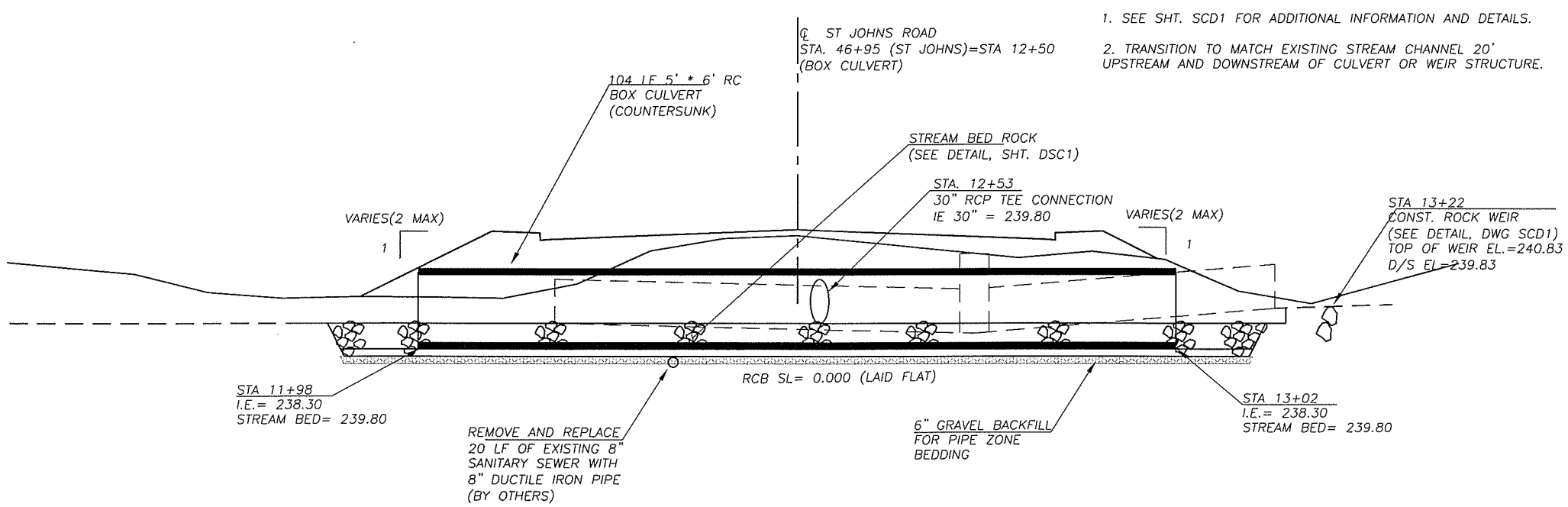

PRELIMINARY

DESIGNED	MME/JM
DRAWN	BAK
CRP	301422
HOR.	1"=10'
VERT.	1"=5'
DATE	3/31/04
DWG.	DP201
SHEET	OF

CALL 48 HOURS BEFORE YOU DIG 1-800-553-4344 "It's the Law" NORTHWEST UTILITIES NOTIFICATION CENTER

STATE OF WASHINGTON MILLIE M. BERNSTEIN 31148 REGISTERED PROFESSIONAL ENGINEER EXPIRES: JULY 7, 2003

DESIGN & ENGINEERING DIVISION
DESIGN SECTION

ST. JOHNS RD (NE 50TH TO NE 72NE)
LALONDE CREEK CULVERT #1 (BOX CULVERT)

proud past, promising future
CLARK COUNTY WASHINGTON

N:\CIP\PROJECTS\301422-STJohns-50thTo72nd\DESIGN\DWGS\DP201.dwg, 3/24/2004 11:29:56 AM, kerlinr

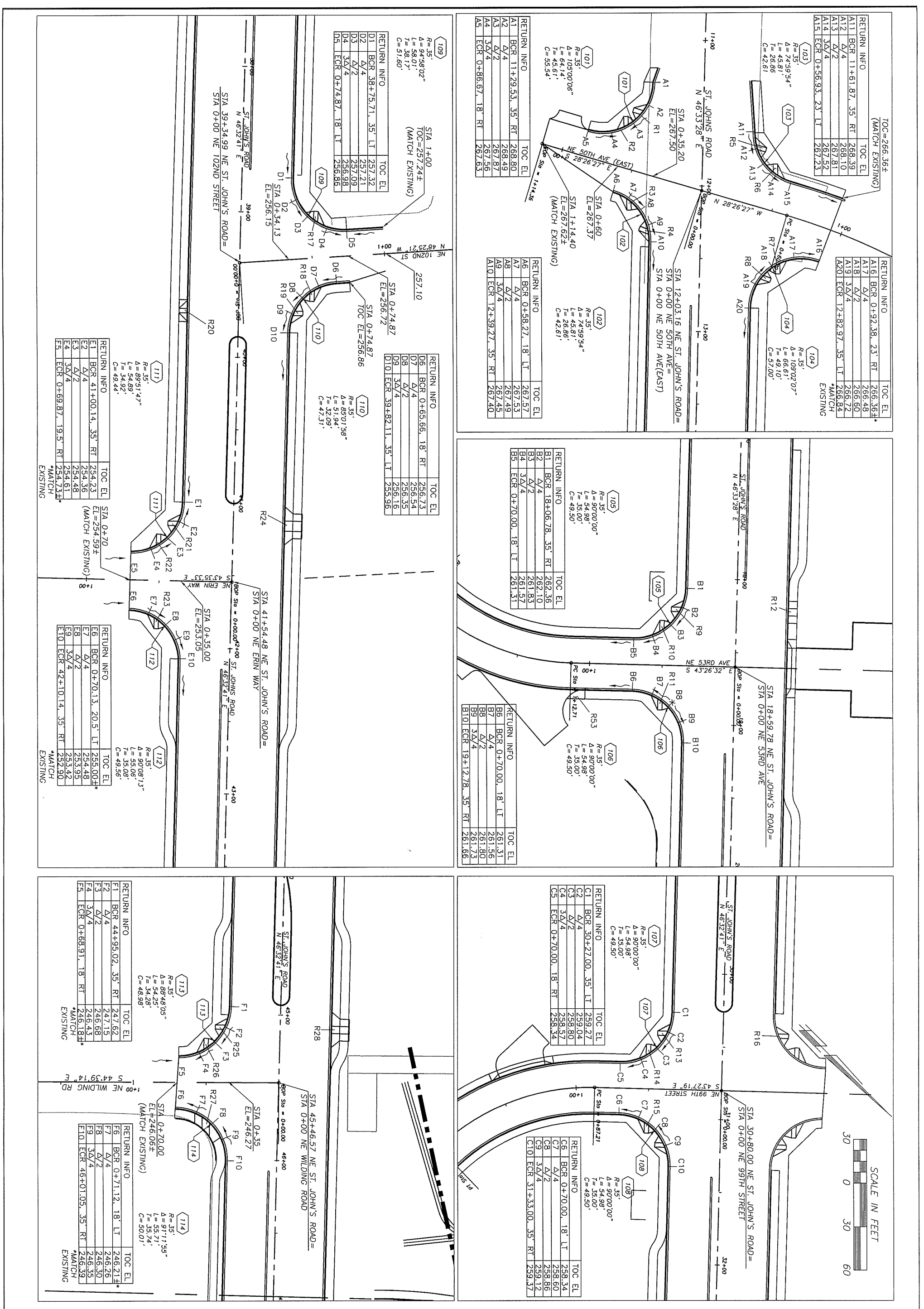

RETURN INFO				TOC EL
A11	BCR	11+61.87,	35' RT	268.39
A12	Δ/4			268.10
A13	Δ/2			267.81
A14	3Δ/4			267.52
A15	ECR	0+56.93,	23' LT	267.23

103: R= 35', Δ= 74°59'54", L= 45.81', T= 26.86', C= 42.61'

RETURN INFO				TOC EL
A16	BCR	0+92.38,	23' RT	266.36±*
A17	Δ/4			266.48
A18	Δ/2			266.60
A19	3Δ/4			266.72
A20	ECR	12+82.97,	35' LT	266.84

*MATCH EXISTING

104: R= 35', Δ= 109°02'07", L= 66.61', T= 49.10', C= 57.00'

RETURN INFO				TOC EL
A1	BCR	11+29.53,	35' RT	268.80
A2	Δ/4			268.49
A3	Δ/2			267.87
A4	3Δ/4			267.56
A5	ECR	0+86.67,	18' RT	267.63

101: R= 35', Δ= 105°00'06", L= 64.14', T= 45.61', C= 55.54'

RETURN INFO				TOC EL
A6	BCR	0+58.27,	18' LT	267.57
A7	Δ/4			267.53
A8	Δ/2			267.49
A9	3Δ/4			267.45
A10	ECR	12+39.27,	35' RT	267.40

102: R= 35', Δ= 74°59'54", L= 45.81', T= 26.86', C= 42.61'

RETURN INFO				TOC EL
D1	BCR	38+75.71,	35' LT	257.32
D2	Δ/4			257.21
D3	Δ/2			257.09
D4	3Δ/4			256.98
D5	ECR	0+74.87,	18' LT	256.86

109: R= 35', Δ= 94°58'02", L= 58.01', T= 38.17', C= 51.60'

RETURN INFO				TOC EL
D6	BCR	0+65.66,	18' RT	256.73
D7	Δ/4			256.54
D8	Δ/2			256.35
D9	3Δ/4			256.16
D10	ECR	39+82.11,	35' LT	255.96

110: R= 35', Δ= 85°01'58", L= 51.94', T= 32.09', C= 47.31'

RETURN INFO				TOC EL
E1	BCR	41+00.14,	35' RT	254.23
E2	Δ/4			254.36
E3	Δ/2			254.48
E4	3Δ/4			254.61
E5	ECR	0+69.87,	19.5' RT	254.73±*

*MATCH EXISTING

111: R= 35', Δ= 89°51'47", L= 54.89', T= 34.92', C= 49.44'

RETURN INFO				TOC EL
E6	BCR	0+70.13,	20.5' LT	255.00±*
E7	Δ/4			254.48
E8	Δ/2			253.95
E9	3Δ/4			253.42
E10	ECR	42+10.14,	35' RT	252.90

*MATCH EXISTING

112: R= 35', Δ= 90°08'13", L= 55.06', T= 35.08', C= 49.56'

RETURN INFO				TOC EL
F1	BCR	44+95.02,	35' RT	247.62
F2	Δ/4			247.15
F3	Δ/2			246.68
F4	3Δ/4			246.43
F5	ECR	0+68.91,	18' RT	246.18±*

*MATCH EXISTING

113: R= 35', Δ= 88°48'05", L= 54.25', T= 34.28', C= 48.98'

RETURN INFO				TOC EL
F6	BCR	0+71.12,	18' LT	246.21±*
F7	Δ/4			246.26
F8	Δ/2			246.30
F9	3Δ/4			246.35
F10	ECR	46+01.05,	35' RT	246.39

*MATCH EXISTING

114: R= 35', Δ= 91°11'55", L= 55.71', T= 35.74', C= 50.01'

RETURN INFO				TOC EL
B1	BCR	18+06.78,	35' RT	262.36
B2	Δ/4			262.10
B3	Δ/2			261.83
B4	3Δ/4			261.57
B5	ECR	0+70.00,	18' LT	261.31

105: R= 35', Δ= 90°00'00", L= 54.98', T= 35.00', C= 49.50'

RETURN INFO				TOC EL
B6	BCR	0+70.00,	18' LT	261.31
B7	Δ/4			261.56
B8	Δ/2			261.80
B9	3Δ/4			261.73
B10	ECR	19+12.78,	35' RT	261.66

106: R= 35', Δ= 90°00'00", L= 54.98', T= 35.00', C= 49.50'

RETURN INFO				TOC EL
C1	BCR	30+27.00,	35' LT	259.27
C2	Δ/4			259.04
C3	Δ/2			258.80
C4	3Δ/4			258.57
C5	ECR	0+70.00,	18' RT	258.34

107: R= 35', Δ= 90°00'00", L= 54.98', T= 35.00', C= 49.50'

RETURN INFO				TOC EL
C6	BCR	0+70.00,	18' LT	258.34
C7	Δ/4			258.60
C8	Δ/2			258.86
C9	3Δ/4			259.12
C10	ECR	31+33.00,	35' RT	259.37

108: R= 35', Δ= 90°00'00", L= 54.98', T= 35.00', C= 49.50'

DESIGN & ENGINEERING DIVISION
DESIGN SECTION

ST. JOHNS RD (NE 50TH TO NE 72ND)
INTERSECTION PLAN

CLARK COUNTY
WASHINGTON
proud past, promising future

MICHAEL M. EMRICK
STATE OF WASHINGTON
29030
REGISTERED
PROFESSIONAL ENGINEER
EXPIRES: MAY 26, 2005

CALL 48 HOURS BEFORE YOU DIG
1-800-553-4344
"It's the Law"
NORTHWEST UTILITIES NOTIFICATION CENTER

DESIGNED	ME
DRAWN	BAK
CRP	301422
HOR.	1"=30'
VERT.	NA
DATE	3/18/02
DWG:	101
SHEET	OF

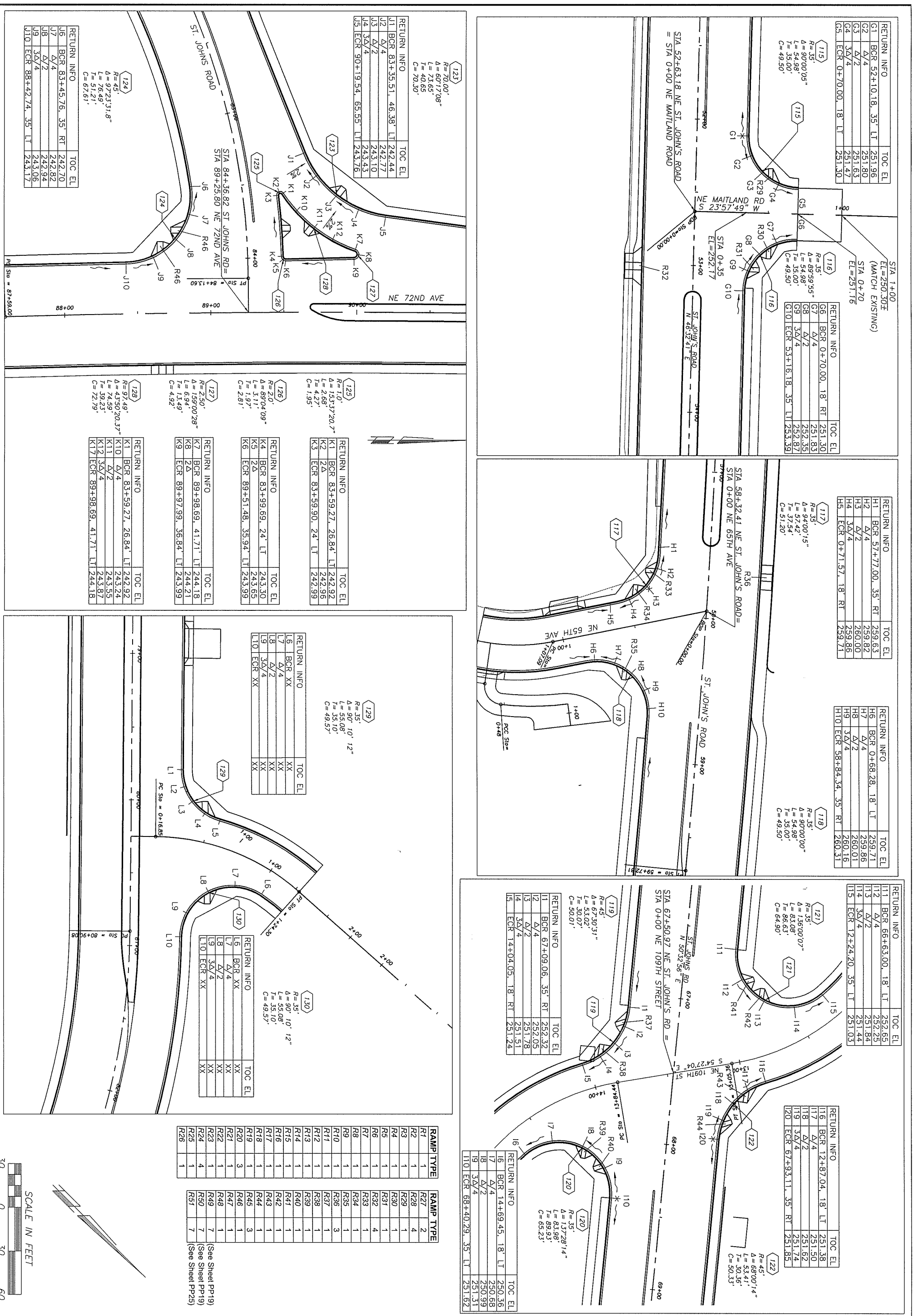

RETURN INFO				TOC EL
G1	BCR	52+10.18,	35' LT	251.96
G2	Δ/4			251.80
G3	Δ/2			251.63
G4	3Δ/4			251.47
G5	ECR	0+70.00,	18' LT	251.30

RETURN INFO				TOC EL
G6	BCR	0+70.00,	18' RT	251.30
G7	Δ/4			251.83
G8	Δ/2			252.35
G9	3Δ/4			252.87
G10	ECR	53+16.18,	35' LT	253.39

RETURN INFO				TOC EL
H1	BCR	57+77.00,	35' RT	259.63
H2	Δ/4			259.82
H3	Δ/2			260.00
H4	3Δ/4			259.86
H5	ECR	0+71.57,	18' RT	259.71

RETURN INFO				TOC EL
H6	BCR	0+68.28,	18' LT	259.71
H7	Δ/4			259.86
H8	Δ/2			260.01
H9	3Δ/4			260.16
H10	ECR	58+84.34,	35' RT	260.31

RETURN INFO				TOC EL
I11	BCR	66+63.00,	18' LT	252.65
I12	Δ/4			252.25
I13	Δ/2			251.84
I14	3Δ/4			251.44
I15	ECR	12+24.20,	35' LT	251.03

RETURN INFO				TOC EL
I16	BCR	12+87.04,	18' LT	251.38
I17	Δ/4			251.50
I18	Δ/2			251.62
I19	3Δ/4			251.74
I20	ECR	67+93.11,	35' RT	251.85

RETURN INFO				TOC EL
I1	BCR	67+09.06,	35' RT	252.32
I2	Δ/4			252.05
I3	Δ/2			251.78
I4	3Δ/4			251.51
I5	ECR	14+04.05,	18' RT	251.24

RETURN INFO				TOC EL
I6	BCR	14+69.45,	18' LT	250.36
I7	Δ/4			250.68
I8	Δ/2			250.99
I9	3Δ/4			251.31
I10	ECR	68+40.29,	35' LT	251.62

RETURN INFO				TOC EL
J1	BCR	83+35.51,	46.38' LT	242.44
J2	Δ/4			242.77
J3	Δ/2			243.10
J4	3Δ/4			243.43
J5	ECR	90+19.54,	65.55' LT	243.76

RETURN INFO				TOC EL
J6	BCR	83+45.76,	35' RT	242.70
J7	Δ/4			242.82
J8	Δ/2			242.94
J9	3Δ/4			243.06
J10	ECR	88+42.74,	35' LT	243.17

RETURN INFO				TOC EL
K1	BCR	83+59.27,	26.84' LT	242.92
K2	2Δ			242.96
K3	ECR	83+59.90,	24' LT	242.99

RETURN INFO				TOC EL
K4	BCR	83+99.69,	24' LT	243.30
K5	2Δ			243.65
K6	ECR	89+51.48,	35.94' LT	243.99

RETURN INFO				TOC EL
K7	BCR	89+98.69,	41.71' LT	244.18
K8	2Δ			244.21
K9	ECR	89+97.99,	36.84' LT	243.99

RETURN INFO				TOC EL
K1	BCR	83+59.27,	26.84' LT	242.92
K10	Δ/4			243.24
K11	Δ/2			243.55
K12	3Δ/4			243.87
K17	ECR	89+98.69,	41.71' LT	244.18

RETURN INFO				TOC EL
L6	BCR	XX		XX
L7	Δ/4			XX
L8	Δ/2			XX
L9	3Δ/4			XX
L10	ECR	XX		XX

RETURN INFO				TOC EL
L6	BCR	XX		XX
L7	Δ/4			XX
L8	Δ/2			XX
L9	3Δ/4			XX
L10	ECR	XX		XX

RAMP	TYPE
R1	1
R2	1
R3	1
R4	1
R5	1
R6	1
R7	1
R8	1
R9	1
R10	1
R11	1
R12	1
R13	1
R14	1
R15	1
R16	1
R17	1
R18	1
R19	1
R20	3
R21	1
R22	1
R23	1
R24	4
R25	1
R26	1

RAMP	TYPE
R27	2
R28	4
R29	1
R30	1
R31	1
R32	4
R33	1
R34	1
R35	1
R36	3
R37	1
R38	1
R39	1
R40	1
R41	1
R42	1
R43	1
R44	1
R45	3
R46	1
R47	1
R48	1
R49	7
R50	7
R51	7

(See Sheet PP19)
(See Sheet PP19)
(See Sheet PP25)

proud past, promising future

CLARK COUNTY
WASHINGTON

DESIGN & ENGINEERING DIVISION
DESIGN SECTION

ST. JOHNS RD (NE 50TH TO NE 72ND)
INTERSECTION PLAN

MICHAEL M. EMRICK
STATE OF WASHINGTON
29030
REGISTERED
PROFESSIONAL ENGINEER
EXPIRES: MAY 26, 2005

CALL 48 HOURS BEFORE YOU DIG
1-800-553-4344
"It's the Law"
NORTHWEST UTILITIES NOTIFICATION CENTER

DESIGNED	MME
DRAWN	BAK
CRP	301422
HOR.	1"=30'
VERT.	NA
DATE	3/18/02
DWG:	102
SHEET	OF

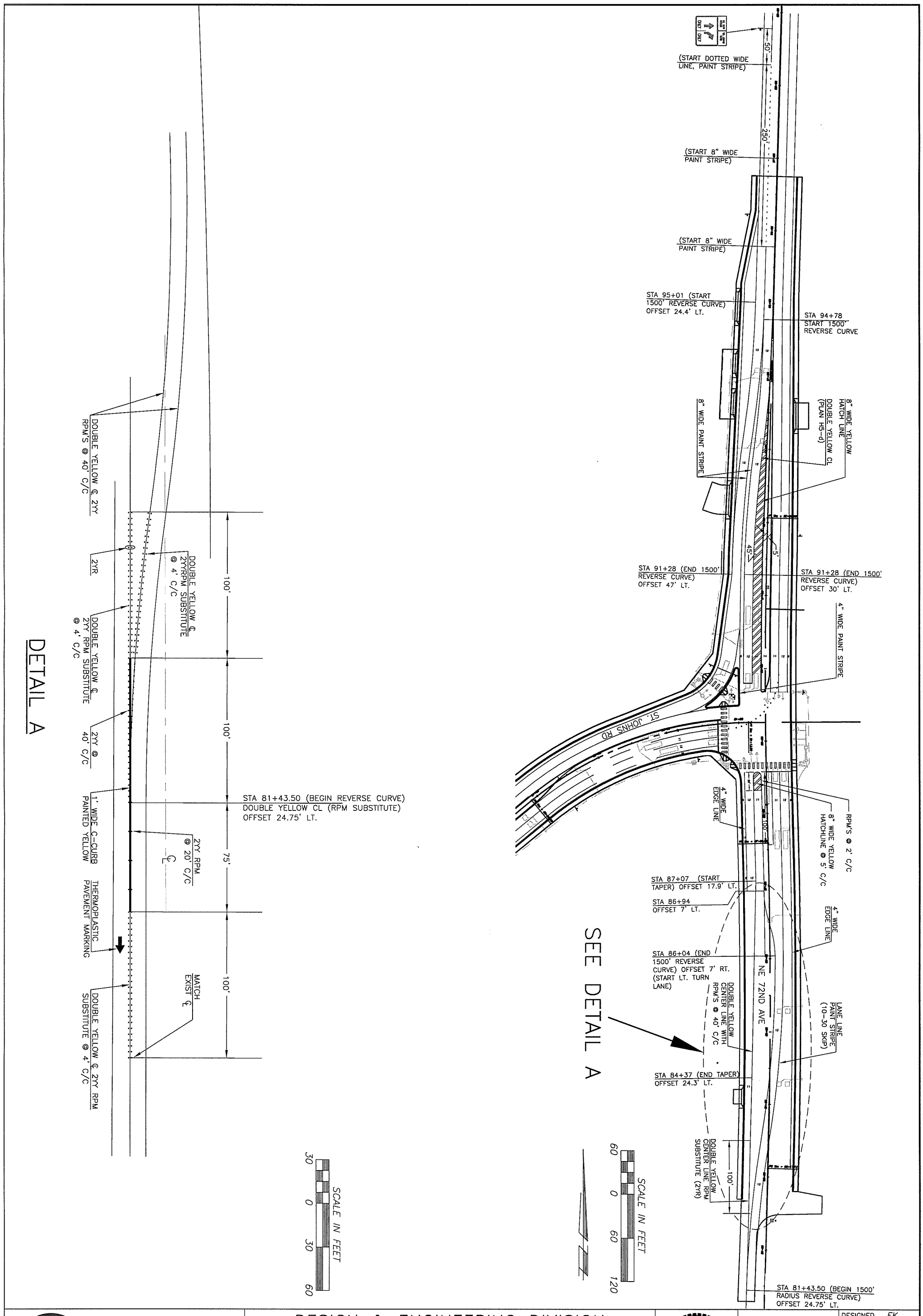

CLARK COUNTY
WASHINGTON
proud past, promising future

DESIGN & ENGINEERING DIVISION
DESIGN SECTION

ST. JOHNS ROAD
INTERIM INTERSECTION STRIPING PLAN

EJAZ KHAN
STATE OF WASHINGTON
35938
REGISTERED PROFESSIONAL ENGINEER
EXPIRES: JAN. 01, 2006

CALL 48 HOURS BEFORE YOU DIG
1-800-553-4344
"It's the Law"
NORTHWEST UTILITIES NOTIFICATION CENTER

DESIGNED	EK
DRAWN	EK
CRP	301422
HOR.	1"=60'
VERT.	NA
DATE	3/3/04
DWG:	STR3
SHEET	OF

N:\CIP\PROJECTS\301422-STJohns-50thTo72nd\DESIGN\Signal\STJ-72NDSIG\SSPLAN-STR4.dwg, Layout1, 3/30/2004 9:56:50 AM, BEGLEYK

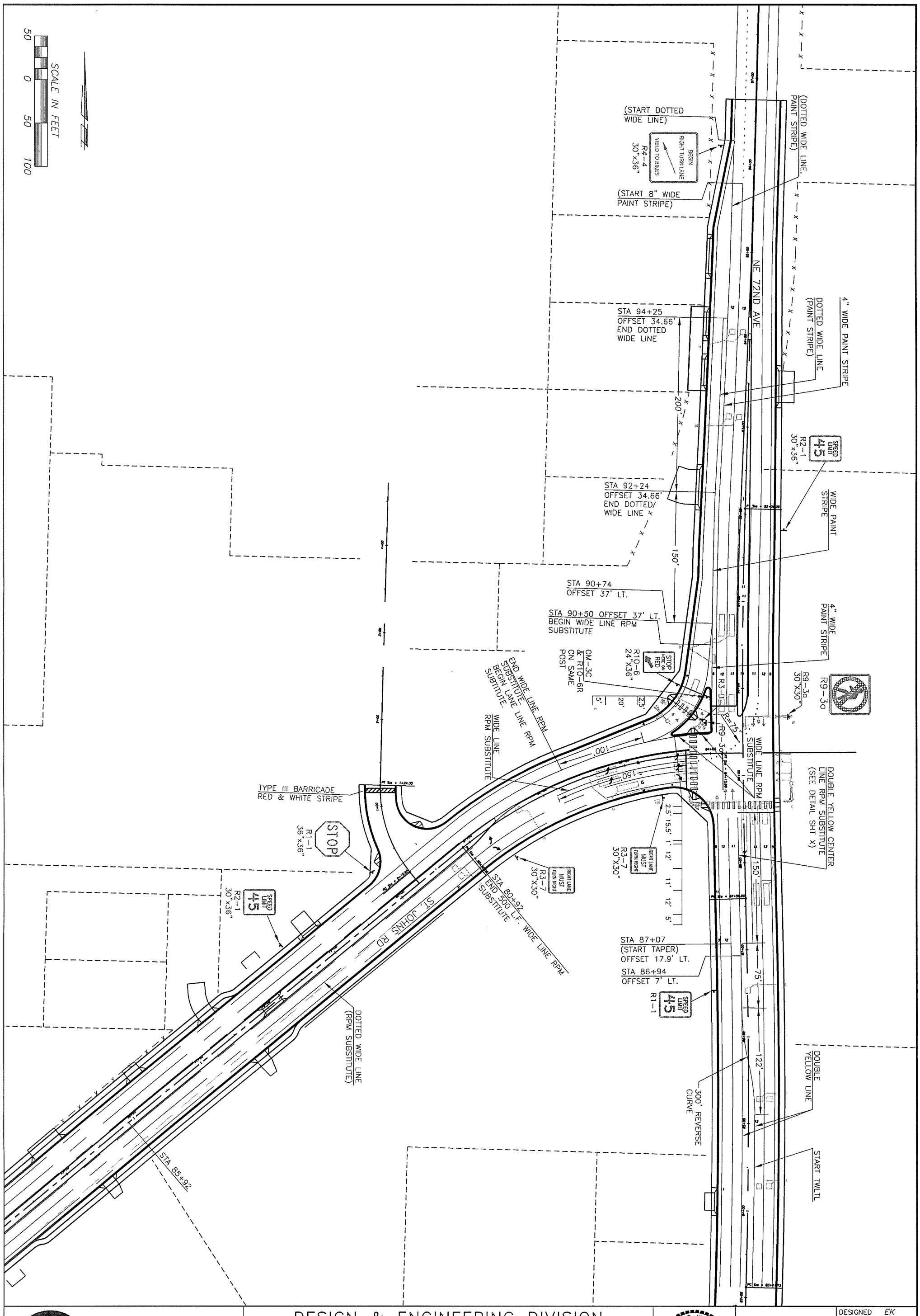

proud past, promising future

CLARK COUNTY
WASHINGTON

DESIGN & ENGINEERING DIVISION
DESIGN SECTION

ST. JOHNS ROAD
INTERSECTION SIGNING & STRIPING PLAN

EJAZ KHAN
STATE OF WASHINGTON
35938
REGISTERED PROFESSIONAL ENGINEER
EXPIRES: JAN. 01, 2006

CALL 48 HOURS BEFORE YOU DIG
1-800-553-4344
"It's the Law"
NORTHWEST UTILITIES NOTIFICATION CENTER

DESIGNED	EK
DRAWN	EK
CRP	301422
HOR.	1"=50'
VERT.	NA
DATE	3/3/04
DWG:	STR4
SHEET	OF

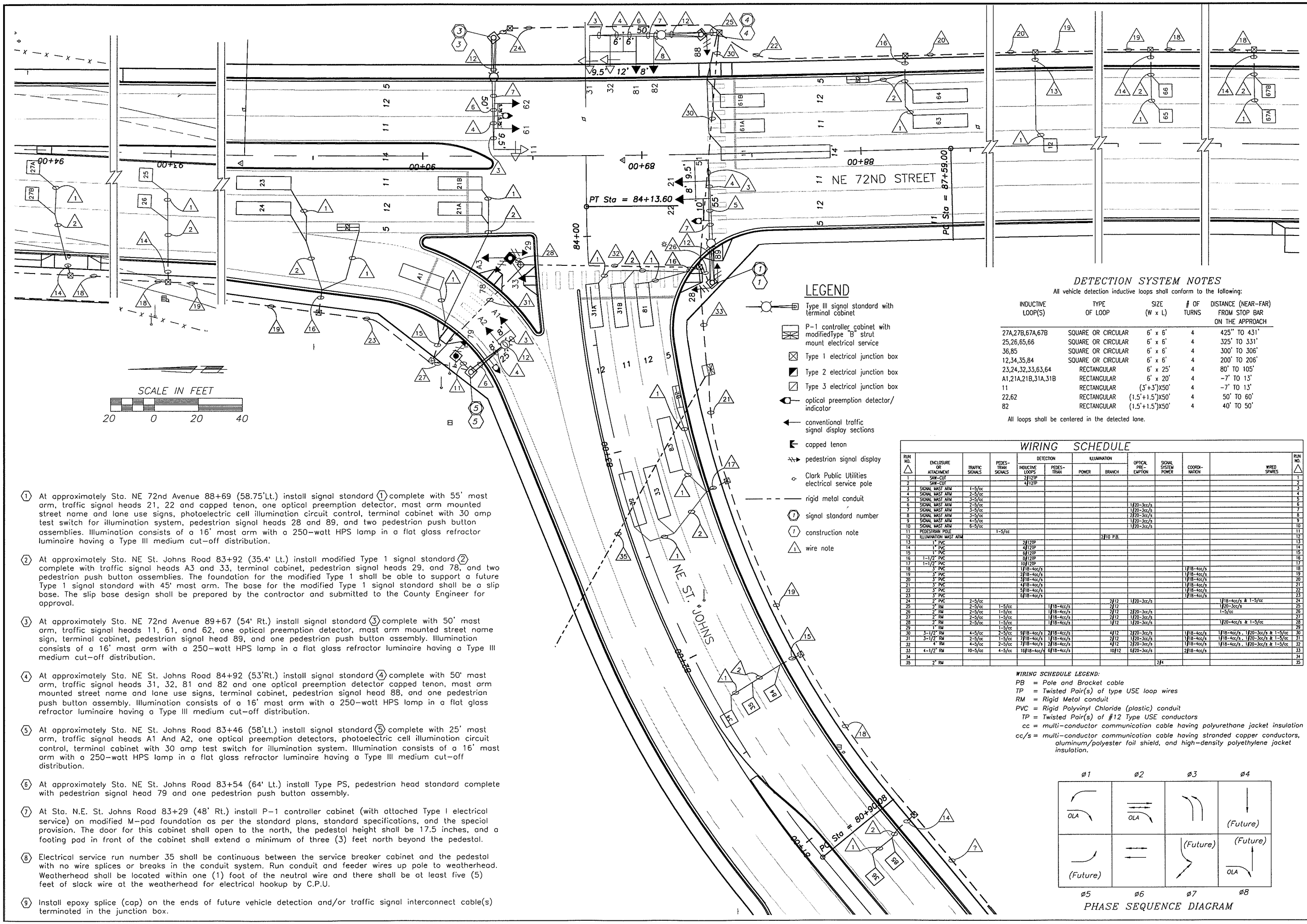

LEGEND

- Type III signal standard with terminal cabinet
- P-1 controller cabinet with modifiedType "B" strut mount electrical service
- Type 1 electrical junction box
- Type 2 electrical junction box
- Type 3 electrical junction box
- optical preemption detector/ indicator
- conventional traffic signal display sections
- capped tenon
- pedestrian signal display
- Clark Public Utilities electrical service pole
- rigid metal conduit
- signal standard number
- construction note
- wire note

DETECTION SYSTEM NOTES

All vehicle detection inductive loops shall conform to the following:

INDUCTIVE LOOP(S)	TYPE OF LOOP	SIZE (W x L)	# OF TURNS	DISTANCE (NEAR-FAR) FROM STOP BAR ON THE APPROACH
27A,27B,67A,67B	SQUARE OR CIRCULAR	6' x 6'	4	425" TO 431'
25,26,65,66	SQUARE OR CIRCULAR	6' x 6'	4	325' TO 331'
36,85	SQUARE OR CIRCULAR	6' x 6'	4	300' TO 306'
12,34,35,84	SQUARE OR CIRCULAR	6' x 6'	4	200' TO 206'
23,24,32,33,63,64	RECTANGULAR	6' x 25'	4	80' TO 105'
A1,21A,21B,31A,31B	RECTANGULAR	6' x 20'	4	-7' TO 13'
11	RECTANGULAR	(3'+3')X50'	4	-7' TO 13'
22,62	RECTANGULAR	(1.5'+1.5')X50'	4	50' TO 60'
82	RECTANGULAR	(1.5'+1.5')X50'	4	40' TO 50'

All loops shall be centered in the detected lane.

WIRING SCHEDULE

RUN NO. △	ENCLOSURE OR ATTACHMENT	TRAFFIC SIGNALS	PEDES-TRIAN SIGNALS	DETECTION: INDUCTIVE LOOPS	DETECTION: PEDES-TRIAN	ILLUMINATION: POWER	ILLUMINATION: BRANCH	OPTICAL PRE-EMPTION	SIGNAL SYSTEM POWER	COORDI-NATION	WIRED SPARES	RUN NO. △
1	SAW-CUT			2/12TP								1
2	SAW-CUT			4/12TP								2
3	SIGNAL MAST ARM	1-5/cc										3
4	SIGNAL MAST ARM	2-5/cc										4
5	SIGNAL MAST ARM	3-5/cc										5
6	SIGNAL MAST ARM	2-5/cc						1/20-3cc/s				6
7	SIGNAL MAST ARM	3-5/cc						1/20-3cc/s				7
8	SIGNAL MAST ARM	3-5/cc						2/20-3cc/s				8
9	SIGNAL MAST ARM	4-5/cc						1/20-3cc/s				9
10	SIGNAL MAST ARM	6-5/cc						1/20-3cc/s				10
11	PEDESTRIAN POLE		1-5/cc									11
12	ILLUMINATION MAST ARM						2/10 PB.					12
13	1" PVC			2/12TP								13
14	1" PVC			4/12TP								14
15	1" PVC			6/12TP								15
16	1-1/2" PVC			8/12TP								16
17	1-1/2" PVC			10/12TP								17
18	3" PVC			1/18-4cc/s						1/18-4cc/s		18
19	3" PVC			2/18-4cc/s						1/18-4cc/s		19
20	3" PVC			3/18-4cc/s						1/18-4cc/s		20
21	3" PVC			4/18-4cc/s						1/18-4cc/s		21
22	3" PVC			5/18-4cc/s						1/18-4cc/s		22
23	3" PVC			6/18-4cc/s						1/18-4cc/s		23
24	2" PVC	2-5/cc					2/12	1/20-3cc/s			1/18-4cc/s & 1-5/cc	24
25	2" RM	2-5/cc	1-5/cc		1/18-4cc/s		2/12				1/20-3cc/s	25
26	2" RM	2-5/cc	1-5/cc		1/18-4cc/s		2/12	2/20-3cc/s			1-5/cc	26
27	2" RM	2-5/cc	1-5/cc		1/18-4cc/s		2/12	1/20-3cc/s				27
28	2" RM	2-5/cc	1-5/cc		1/18-4cc/s		1/12	1/20-3cc/s			1/20-4cc/s & 1-5/cc	28
29	1" RM		1-5/cc									29
30	3-1/2" RM	4-5/cc	2-5/cc	9/18-4cc/s	2/18-4cc/s		4/12	2/20-3cc/s		1/18-4cc/s	1/18-4cc/s, 1/20-3cc/s & 1-5/cc	30
31	3-1/2" RM	2-5/cc	1-5/cc	7/18-4cc/s	1/18-4cc/s		2/12	1/20-3cc/s		1/18-4cc/s	1/18-4cc/s, 1/20-3cc/s & 1-5/cc	31
32	4" RM	4-5/cc	2-5/cc	7/18-4cc/s	2/18-4cc/s		4/12	2/20-3cc/s		1/18-4cc/s	1/18-4cc/s, 1/20-3cc/s & 1-5/cc	32
33	4-1/2" RM	10-5/cc	4-5/cc	16/18-4cc/s	6/18-4cc/s		10/12	6/20-3cc/s		2/18-4cc/s		33
34												34
35	2" RM								2/4			35

WIRING SCHEDULE LEGEND:

PB = Pole and Bracket cable
TP = Twisted Pair(s) of type USE loop wires
RM = Rigid Metal conduit
PVC = Rigid Polyvinyl Chloride (plastic) conduit
TP = Twisted Pair(s) of #12 Type USE conductors
cc = multi-conductor communication cable having polyurethane jacket insulation
cc/s = multi-conductor communication cable having stranded copper conductors, aluminum/polyester foil shield, and high-density polyethylene jacket insulation.

PHASE SEQUENCE DIAGRAM

1. At approximately Sta. NE 72nd Avenue 88+69 (58.75'Lt.) install signal standard (1) complete with 55' mast arm, traffic signal heads 21, 22 and capped tenon, one optical preemption detector, mast arm mounted street name and lane use signs, photoelectric cell illumination circuit control, terminal cabinet with 30 amp test switch for illumination system, pedestrian signal heads 28 and 89, and two pedestrian push button assemblies. Illumination consists of a 16' mast arm with a 250-watt HPS lamp in a flat glass refractor luminaire having a Type III medium cut-off distribution.

2. At approximately Sta. NE St. Johns Road 83+92 (35.4' Lt.) install modified Type 1 signal standard (2) complete with traffic signal heads A3 and 33, terminal cabinet, pedestrian signal heads 29, and 78, and two pedestrian push button assemblies. The foundation for the modified Type 1 shall be able to support a future Type 1 signal standard with 45' mast arm. The base for the modified Type 1 signal standard shall be a slip base. The slip base design shall be prepared by the contractor and submitted to the County Engineer for approval.

3. At approximately Sta. NE 72nd Avenue 89+67 (54' Rt.) install signal standard (3) complete with 50' mast arm, traffic signal heads 11, 61, and 62, one optical preemption detector, mast arm mounted street name sign, terminal cabinet, pedestrian signal head 89, and one pedestrian push button assembly. Illumination consists of a 16' mast arm with a 250-watt HPS lamp in a flat glass refractor luminaire having a Type III medium cut-off distribution.

4. At approximately Sta. NE St. Johns Road 84+92 (53'Rt.) install signal standard (4) complete with 50' mast arm, traffic signal heads 31, 32, 81 and 82 and one optical preemption detector capped tenon, mast arm mounted street name and lane use signs, terminal cabinet, pedestrian signal head 88, and one pedestrian push button assembly. Illumination consists of a 16' mast arm with a 250-watt HPS lamp in a flat glass refractor luminaire having a Type III medium cut-off distribution.

5. At approximately Sta. NE St. Johns Road 83+46 (58'Lt.) install signal standard (5) complete with 25' mast arm, traffic signal heads A1 And A2, one optical preemption detectors, photoelectric cell illumination circuit control, terminal cabinet with 30 amp test switch for illumination system. Illumination consists of a 16' mast arm with a 250-watt HPS lamp in a flat glass refractor luminaire having a Type III medium cut-off distribution.

6. At approximately Sta. NE St. Johns Road 83+54 (64' Lt.) install Type PS, pedestrian head standard complete with pedestrian signal head 79 and one pedestrian push button assembly.

7. At Sta. N.E. St. Johns Road 83+29 (48' Rt.) install P-1 controller cabinet (with attached Type I electrical service) on modified M-pad foundation as per the standard plans, standard specifications, and the special provision. The door for this cabinet shall open to the north, the pedestal height shall be 17.5 inches, and a footing pad in front of the cabinet shall extend a minimum of three (3) feet north beyond the pedestal.

8. Electrical service run number 35 shall be continuous between the service breaker cabinet and the pedestal with no wire splices or breaks in the conduit system. Run conduit and feeder wires up pole to weatherhead. Weatherhead shall be located within one (1) foot of the neutral wire and there shall be at least five (5) feet of slack wire at the weatherhead for electrical hookup by C.P.U.

9. Install epoxy splice (cap) on the ends of future vehicle detection and/or traffic signal interconnect cable(s) terminated in the junction box.

DESIGNED	EK
DRAWN	EK
CRP	301422
HOR.	1"=20'
VERT.	NA
DATE	3/3/04
DWG:	TS1
SHEET	OF

CALL 48 HOURS BEFORE YOU DIG
1-800-553-4344
"It's the Law"
NORTHWEST UTILITIES NOTIFICATION CENTER

STATE OF WASHINGTON
35338
REGISTERED PROFESSIONAL ENGINEER
EXPIRES:JAN. 01, 2005

DESIGN & ENGINEERING DIVISION
DESIGN SECTION

ST. JOHNS ROAD
TRAFFIC SIGNAL PLAN

proud past, promising future
CLARK COUNTY
WASHINGTON

N:\CIP\PROJECTS\301422-STJohns-50thTo72nd\DESIGN\Signal\STJ-72NDSIG\STJSTP-TS1.dwg, Layout1, 3/30/2004 9:58:36 AM, BEGLEYK

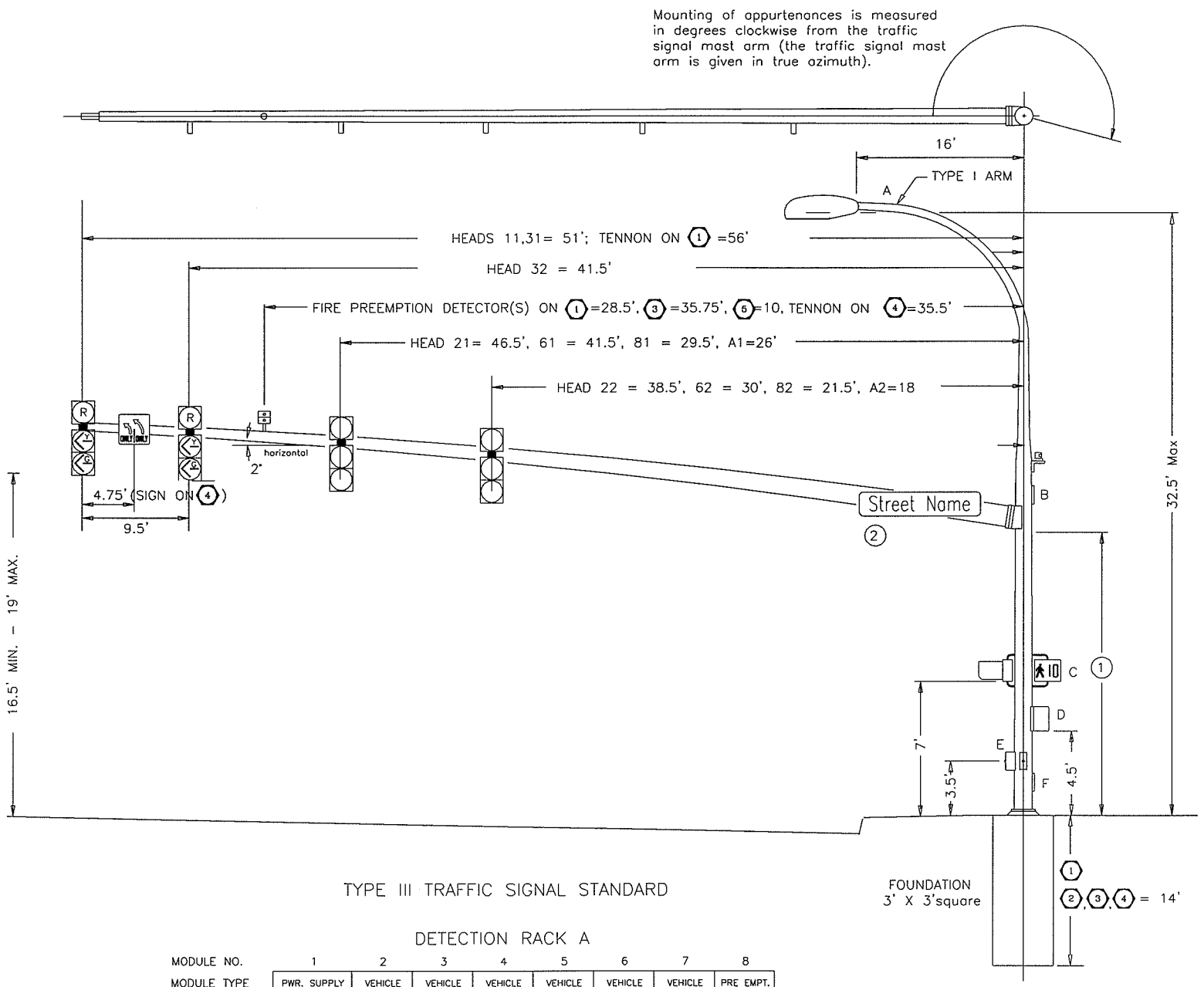

TYPE III TRAFFIC SIGNAL STANDARD

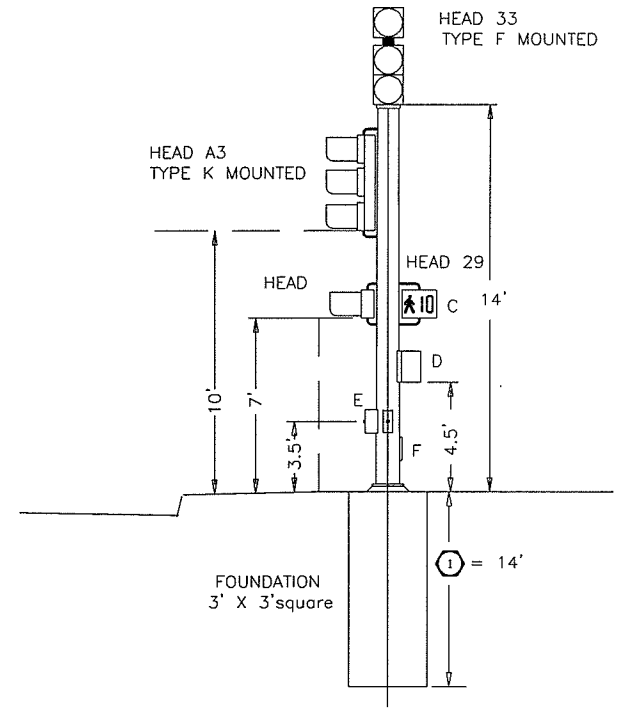

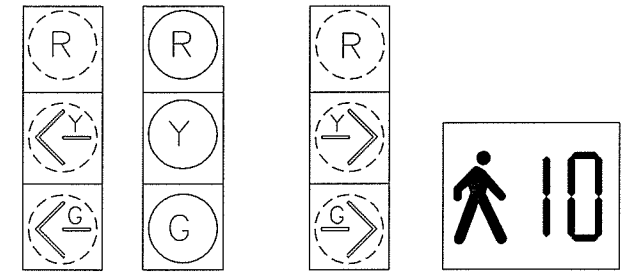

NOTES:

1. TRAFFIC SIGNAL HEADS 11, 31 AND 32 SHALL BE OPTICALLY PROGRAMMED.
2. TRAFFIC SIGNAL HEADS SHALL HAVE 12" SECTIONS, SQUARE DOORS, BACKPLATES, TYPE M MOUNTS AND TUNNEL VISORS (EXCEPT OPTICALLY PROGRAMMED SECTIONS WHICH HAVE CUTAWAY VISORS).
3. ALL RED AND GREEN DISPLAYS SHALL BE LED-TYPE.
4. PEDESTRIAN SIGNAL HEADS ARE 16" (H) x 19 1/2" (W) x 10 1/2" (D) UNITS HAVING SOLID FILLED LED "HAND" AND LED "WALKER" MESSAGES HAVING A TWO (2) DIGIT, SEVEN (7) SEGMENT NUMERICAL COUNT DOWN DISPLAY, Z CRATE VISORS, AND TYPE E MOUNTS.

MODIFIED TYPE I TRAFFIC SIGNAL STANDARD

CONSTRUCTION NOTES FOR MODIFIED TYPE I SIGNAL STANDARD.

1. The foundation anchor plate for the modified type 1 signal standard shall be designed by the contractor to support the extra long signal standard and other appurtenances as shown on the plan.
2. The foundation shall be designed to support future type 3 signal standard with 45 feet mast arm.
3. An anchor plate to support the future type 3 signal standard with 45 feet mast arm shall be provided for in the foundation.
4. Pedestrian signal heads shall be type E mounted.
5. Signal head F shall be type F mounted.
6. Signal head A3 shall be type K mounted.

DETECTION RACK A

MODULE NO.	1	2	3	4	5	6	7	8
MODULE TYPE	PWR. SUPPLY	VEHICLE	VEHICLE	VEHICLE	VEHICLE	VEHICLE	VEHICLE	PRE EMPT.
CHANNEL 1	MODULE 2, 3	11	63	12	23	22	SPARE	NORTH-BOUND
2	MODULE 4, 5	61A&B	64	67A&B	24	42	SPARE	SOUTH-BOUND
3	MODULE 6, 7	51	65	52	25	62	SPARE	EAST-BOUND
4	SPARE	21A&B	66	27A&B	26	82	SPARE	WEST-BOUND

common home-run cable (4cc/s)

DETECTION RACK B

MODULE NO.	1	2	3	4	5	6	7	8
MODULE TYPE	PWR. SUPPLY	VEHICLE	VEHICLE	VEHICLE	VEHICLE	VEHICLE	VEHICLE	PRE EMPT.
CHANNEL 1	MODULE 2, 3	41	44	32	34	A1	SPARE	
2	MODULE 4, 5	71	73	33	35	SPARE	SPARE	
3	MODULE 6, 7	72	31A&B	83	36	SPARE	SPARE	
4	SPARE	43	81	84	85	SPARE	SPARE	

common home-run cable (4cc/s)

VEHICLE DETECTION RACKS

APPURTENANCE ORIENTATION				
SIGNAL STANDARD	(1)	(2)	(3)	(4)
MAST ARM	2° T.A.	91° T.A.	182° T.A.	271°T.A.
A	0°	0°	0°	0°
B	180°	180°	180°	180°
C	143°	155°	142°	153°
D	143°	155°	142°	153°
E	2°/269°	1°/271°	2°/268°	2°/272°
F	180°	180°	180°	180°

T.A.=True Azimuth
A=Illumination mast arm
B=Handhole
C=Pedestrian Signal Heads
D=Terminal Cabinet
E=Pedestrian Pushbuttons with Signs
F=Handhole

NOTES:

(1) Mast arm attachment varies with manufacturer.

(2) Street name and regulatory (R10-12) signs attached per standard plan J-6h. Street name signs are 18" high and have 8" u.c./6" l.c. series "C" black letters on diamond grade VIP reflectorized yellow background. Signs shall include borders, margins, and corner radii. Legends are as follows:

(1) St. Johns Rd.
(4) N.E. 72nd Ave.

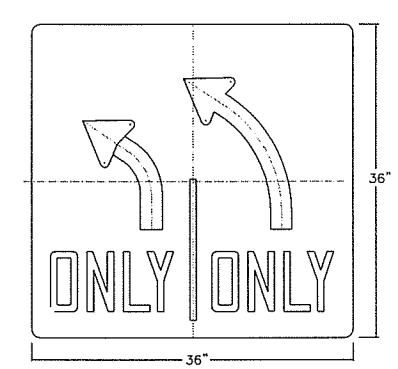

LANE CONTROL SIGN FACE DETAILS

Note: Sign face material to be 3M Scotchlite Diamond Grade VIP or Approved equal

DESIGNED	EK
DRAWN	EK
CRP	301422
HOR.	NA
VERT.	NA
DATE	
DWG:	TS2
SHEET	OF

CALL 48 HOURS BEFORE YOU DIG 1-800-553-4344 "It's the Law" NORTHWEST UTILITIES NOTIFICATION CENTER

STATE OF WASHINGTON 35938 REGISTERED PROFESSIONAL ENGINEER — EXPIRES: JAN. 01, 2005

DESIGN & ENGINEERING DESIGN SECTION

ST. JOHNS ROAD SIGNAL POLE DETAILS

proud past, promising future
CLARK COUNTY WASHINGTON

N:\CIP\PROJECTS\301422-STJohns-50thTo72nd\DESIGN\Signal\STJ-72ND\SIG\SSD-TS2.dwg, Layout1, 3/30/2004 9:59:41 AM, BEGLEYK

WALL 1 (B1)

STA. 1+00.00 TO STA. 3+60.00

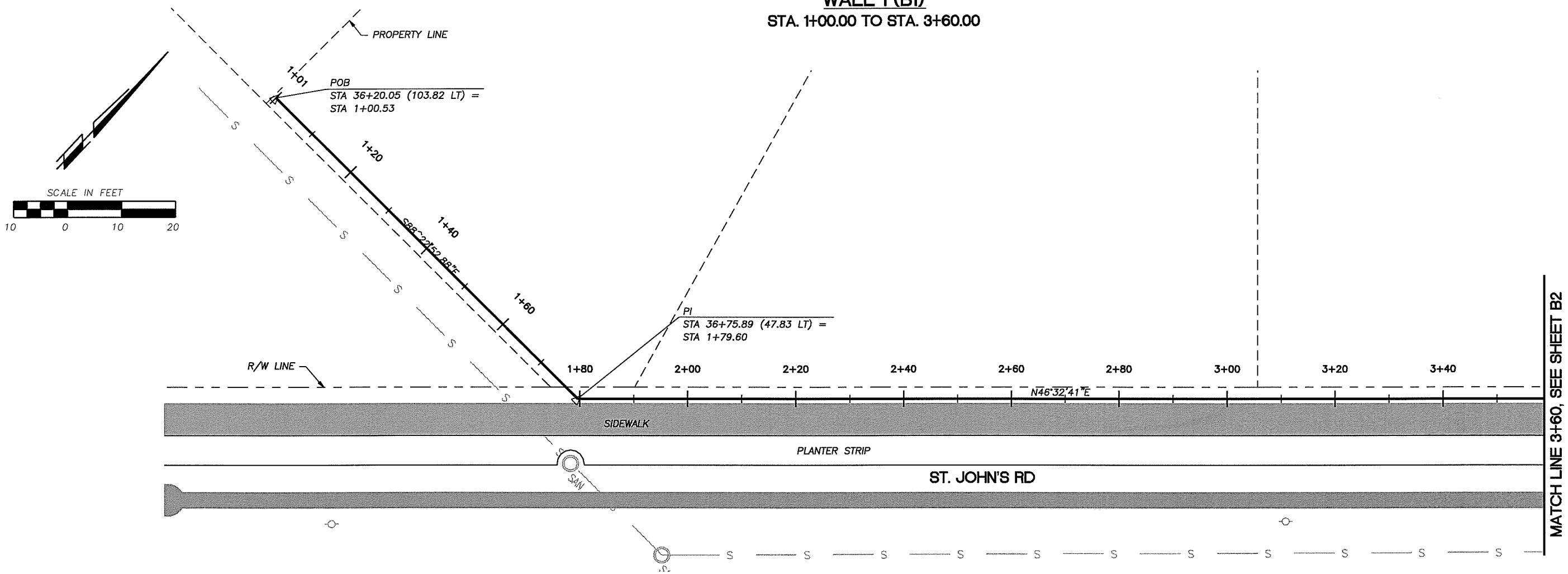

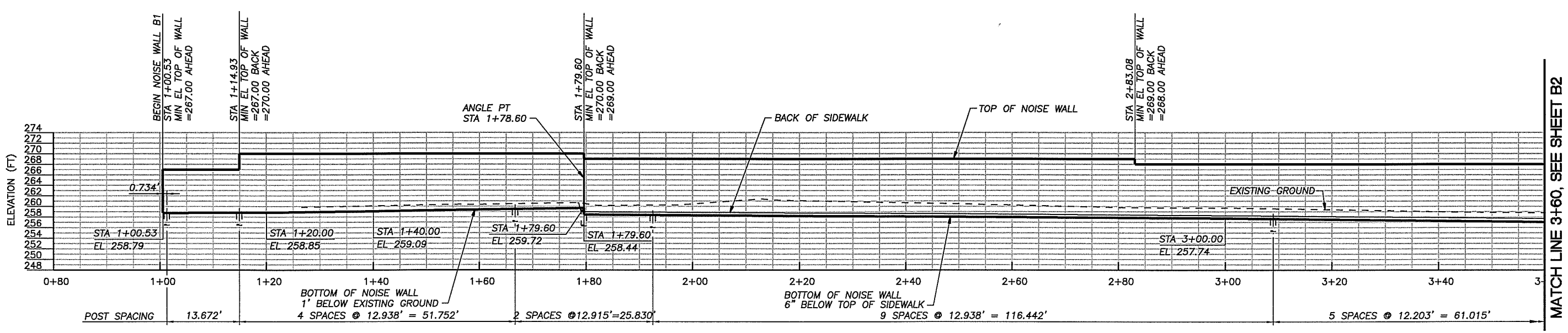

GENERAL NOTES:

1. ALL MATERIAL AND WORKMANSHIP SHALL BE IN ACCORDANCE WITH THE REQUIREMENTS OF THE WASHINGTON STATE DEPARTMENT OF TRANSPORTATION STANDARD SPECIFICATIONS FOR ROAD, BRIDGE, AND MUNICIPAL CONSTRUCTION DATED 2002 AND ADMENDMENTS.
2. THESE STRUCTURES HAVE BEEN DESIGNED IN ACCORDANCE WITH THE REQUIREMENTS OF THE AASHTO STANDARD SPECIFICATIONS FOR HIGHWAY BRIDGES, SEVENTEENTH EDITION – 2002. ALL STRUCTURAL ELEMENTS HAVE BEEN DESIGNED IN ACCORDANCE WITH THE REQUIREMENTS FOR LOAD FACTOR DESIGN. SEISMIC DESIGN OF THESE STRUCTURES HAS BEEN DONE USING AN ACCELERATION COEFFICIENT OF 0.17 AND SOIL TYPE IV.
3. UNLESS OTHERWISE SHOWN IN THE PLANS, THE CONCRETE COVER MEASURED FROM THE FACE OF THE CONCRETE TO THE FACE OF ANY STEEL SHALL BE 1 1/2".
4. ALL STRUCTURAL STEEL SHALL BE AASHTO M270 GR50.
5. ALL DIMENSIONS ARE HORIZONTAL AND VERTICAL UNLESS OTHERWISE SHOWN.
6. STEEL PILES SHALL BE PAINTED TO LIMITS SHOWN IN THE PLANS.
7. ALL DRILLED SHAFTS FOR PILES SHALL BE FILLED WITH LEAN CONCRETE, EXCEPT AS NOTED.
8. ALL EXPOSED SURFACES OF ALL WALLS SHALL BE TREATED WITH "CLEAR SATIN FINISH".

DESIGNED	CEN
DRAWN	DLM
CRP	301422
HOR.	1"=10'
VERT.	1"=10'
DATE	10/31/03
DWG:	B01
SHEET 1	OF 26

CALL 48 HOURS BEFORE YOU DIG 1-800-553-4344 "It's the Law" NORTHWEST UTILITIES NOTIFICATION CENTER

DESIGN & ENGINEERING DIVISION

ST. JOHNS RD. (NE 50TH TO NE 72ND)
RETAINING WALL 1

CHRIST A. NELSON STATE OF WASHINGTON 22366 REGISTERED PROFESSIONAL ENGINEER
EXPIRES 10/29/

CH2MHILL

CLARK COUNTY WASHINGTON

03-NOV-200309:55:42

dmonk

NDM:1540B3180257wo01.dlv

WALL 1 (B2)
STA. 3+60.00 TO STA. 4+17.91

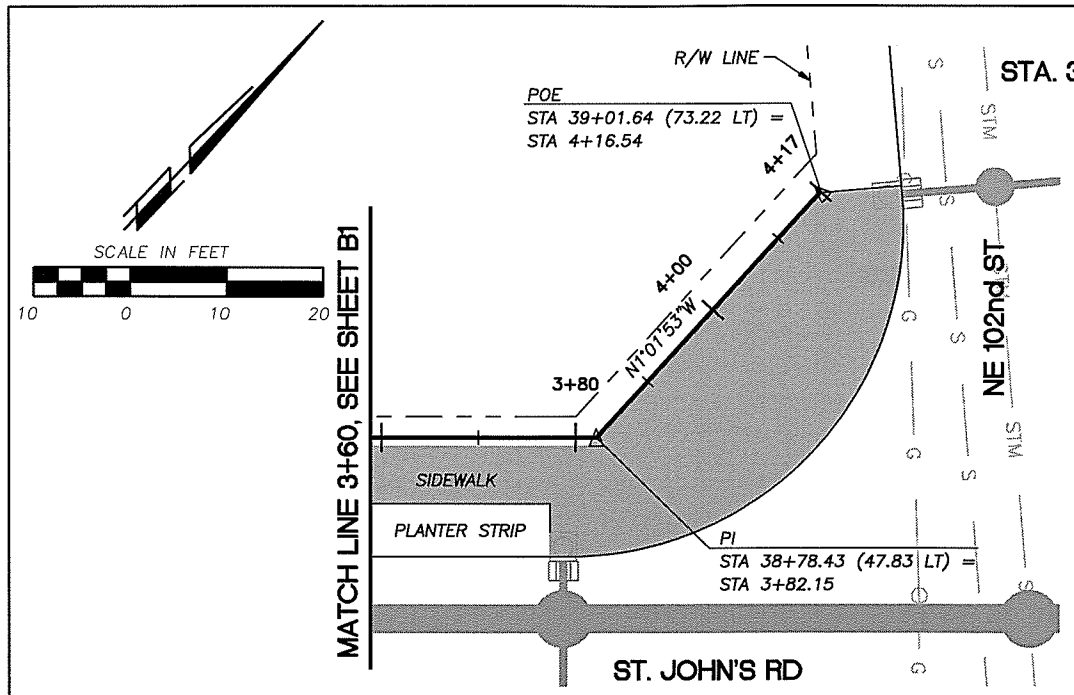

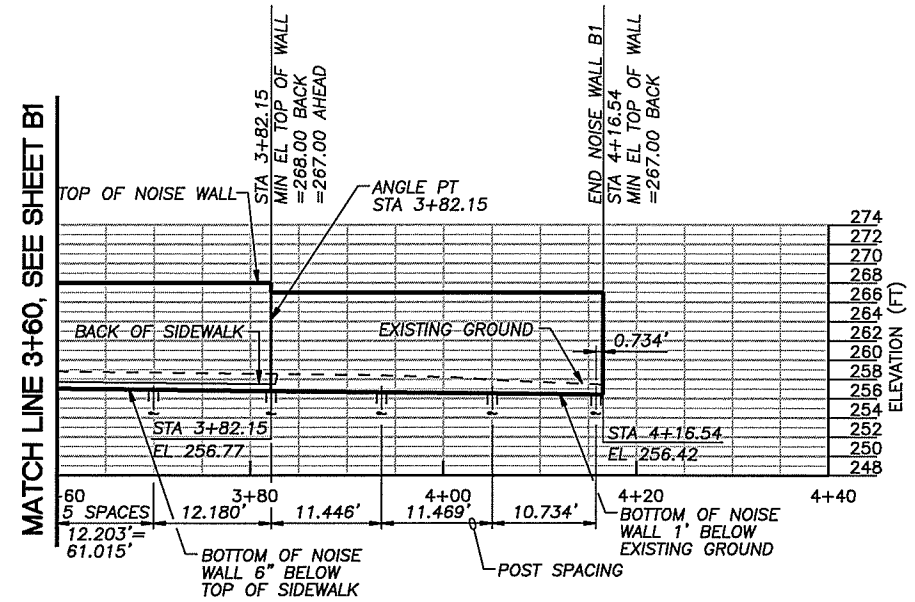

WALL 2 (B2)
STA. 1+00.00 TO STA. 3+27.18

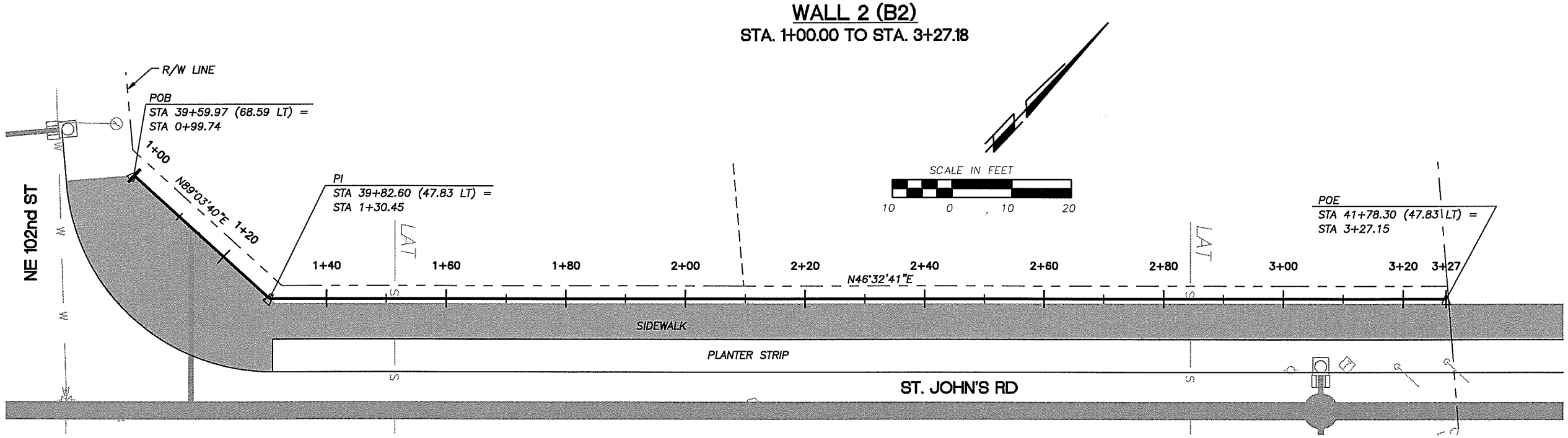

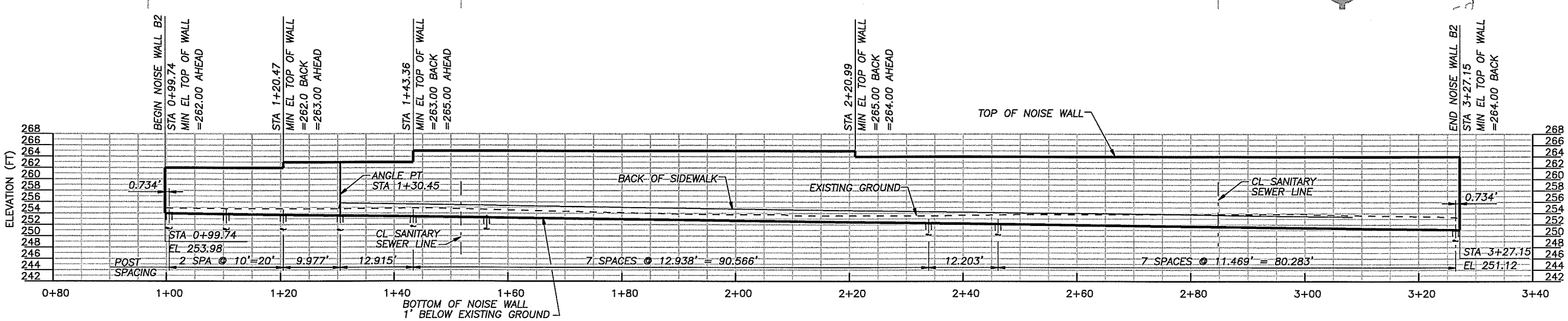

DESIGNED CEN
DRAWN DLM
CRP 301422
HOR. 1"=10'
VERT. 1"=10'
DATE 10/31/03
DWG: B02
SHEET 2 OF 26

CALL 48 HOURS BEFORE YOU DIG
1-800-553-4344
"It's the Law"
NORTHWEST UTILITIES NOTIFICATION CENTER

DESIGN & ENGINEERING DIVISION

ST. JOHNS RD. (NE 50TH TO NE 72ND)
RETAINING WALLS 1 AND 2

C. ERNEST NELSON
STATE OF WASHINGTON
PROFESSIONAL ENGINEER
EXPIRES 10/29/

CH2MHILL

CLARK COUNTY WASHINGTON

03-NOV-200309:53:44
dmonk
NDM:154083180257wa02.dlv

dmonk

NDM:1540831 80257wa03.dlv 03-NOV-200309:51:49

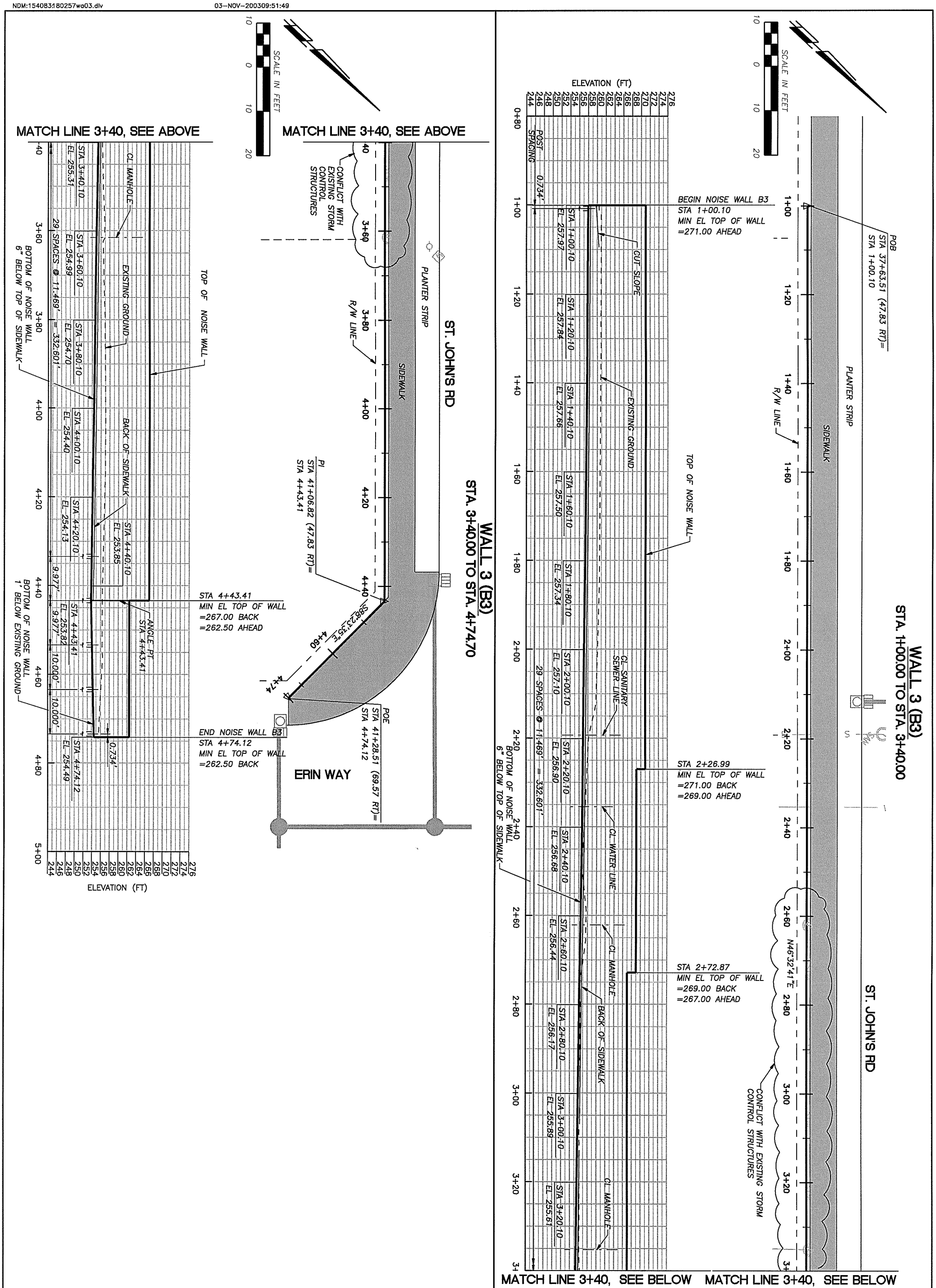

CLARK COUNTY WASHINGTON

CH2MHILL

C. ERNEST NELSON STATE OF WASHINGTON 13799 REGISTERED PROFESSIONAL ENGINEER
EXPIRES 10/29/

DESIGN & ENGINEERING DIVISION

ST. JOHNS RD. (NE 50TH TO NE 72ND)
RETAINING WALL 3

CALL 48 HOURS BEFORE YOU DIG
1-800-553-4344
"It's the Law"
NORTHWEST UTILITIES NOTIFICATION CENTER

DESIGNED	CEN
DRAWN	DLM
CRP	301422
HOR.	1"=10'"
VERT.	1"=10'"
DATE	10/31/03
DWG:	B03
SHEET 3	OF 26

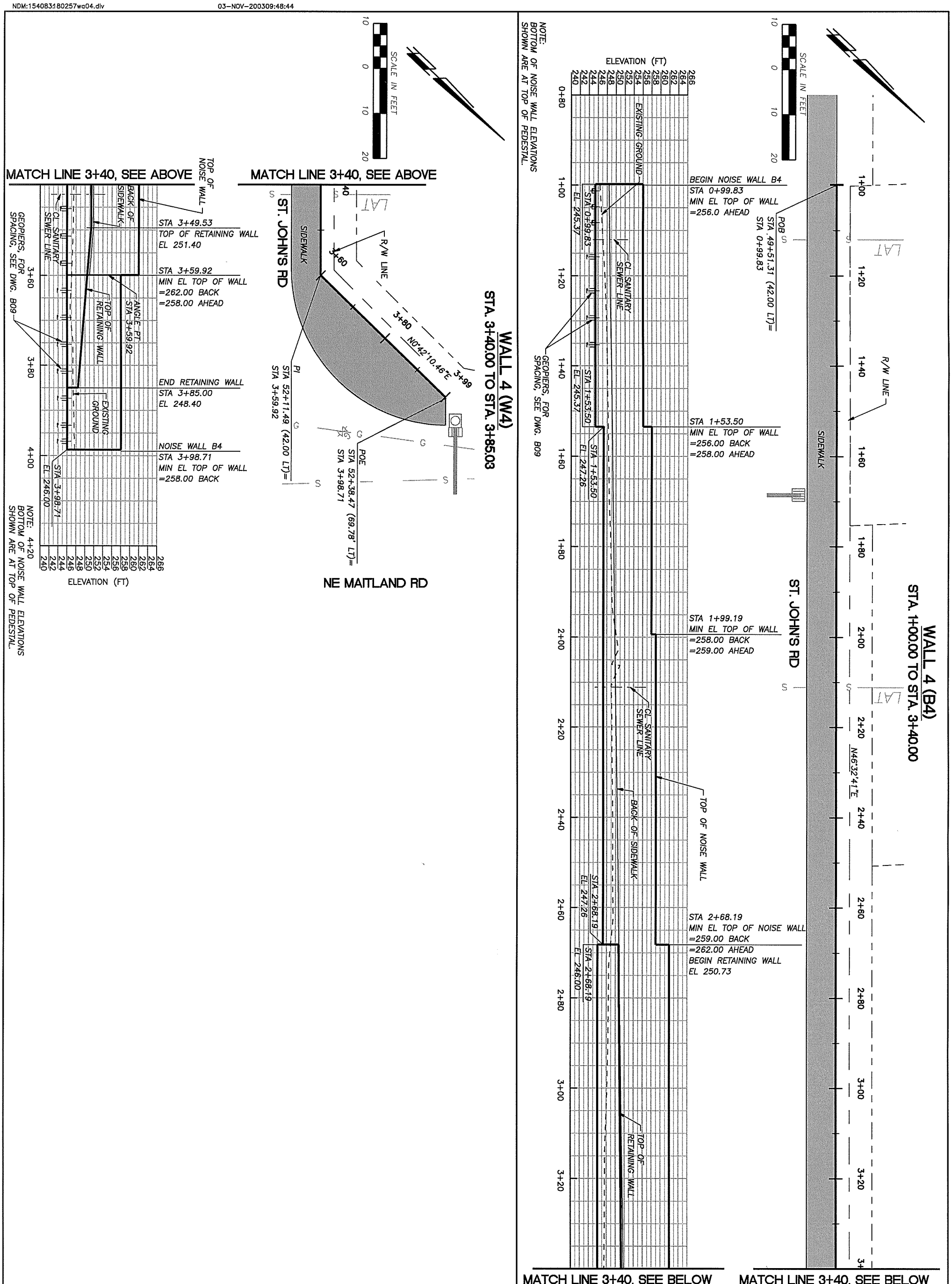

CLARK COUNTY WASHINGTON

CH2MHILL

C. ERNEST NELSON STATE OF WASHINGTON 13799 REGISTERED PROFESSIONAL ENGINEER
EXPIRES 10/29/

DESIGN & ENGINEERING DIVISION

ST. JOHNS RD. (NE 50TH TO NE 72ND)
RETAINING WALL 4

CALL 48 HOURS BEFORE YOU DIG
1-800-553-4344
"It's the Law"
NORTHWEST UTILITIES NOTIFICATION CENTER

DESIGNED	CEN
DRAWN	DLM
CRP	301422
HOR.	1"=10'"
VERT.	1"=10'"
DATE	10/31/03
DWG:	B04
SHEET 4	OF 26

dmonk

NDM:154083180257wa05.dlv 14-OCT-2003 09:06:43

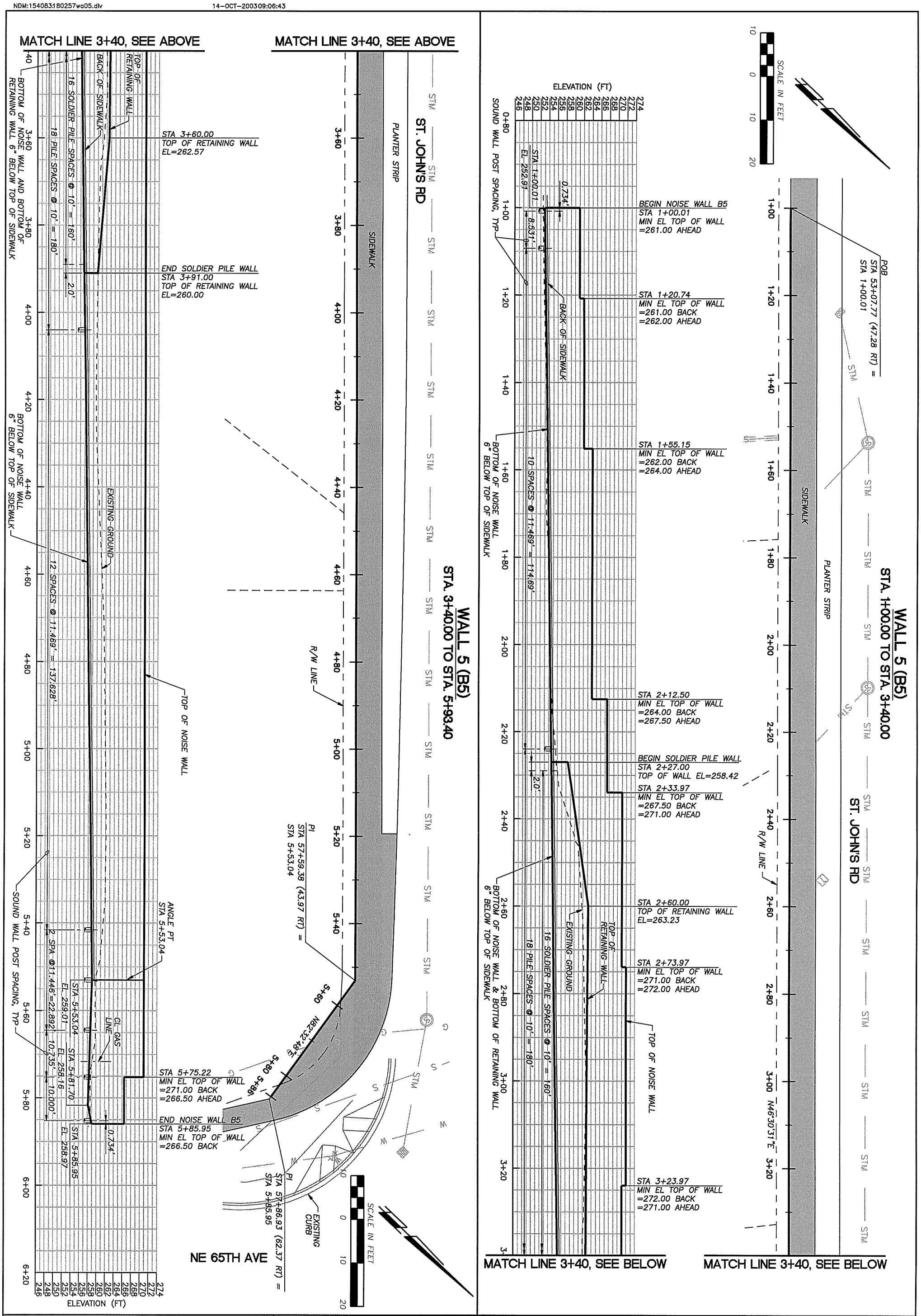

CLARK COUNTY WASHINGTON

CH2MHILL

C. ERNEST NELSON
STATE OF WASHINGTON
13799
REGISTERED PROFESSIONAL ENGINEER
EXPIRES 10/29/

DESIGN & ENGINEERING DIVISION

ST. JOHNS RD. (NE 50TH TO NE 72ND)
RETAINING WALL 5

CALL 48 HOURS BEFORE YOU DIG
1-800-553-4344
"It's the Law"
NORTHWEST UTILITIES NOTIFICATION CENTER

DESIGNED	CEN
DRAWN	DLM
CRP	301422
HOR.	1"=10'"
VERT.	1"=10'"
DATE	10/31/03
DWG:	B05
SHEET	5 OF 26

WALL 6 (B6)
STA. 1+00.00 TO STA. 2+26.28

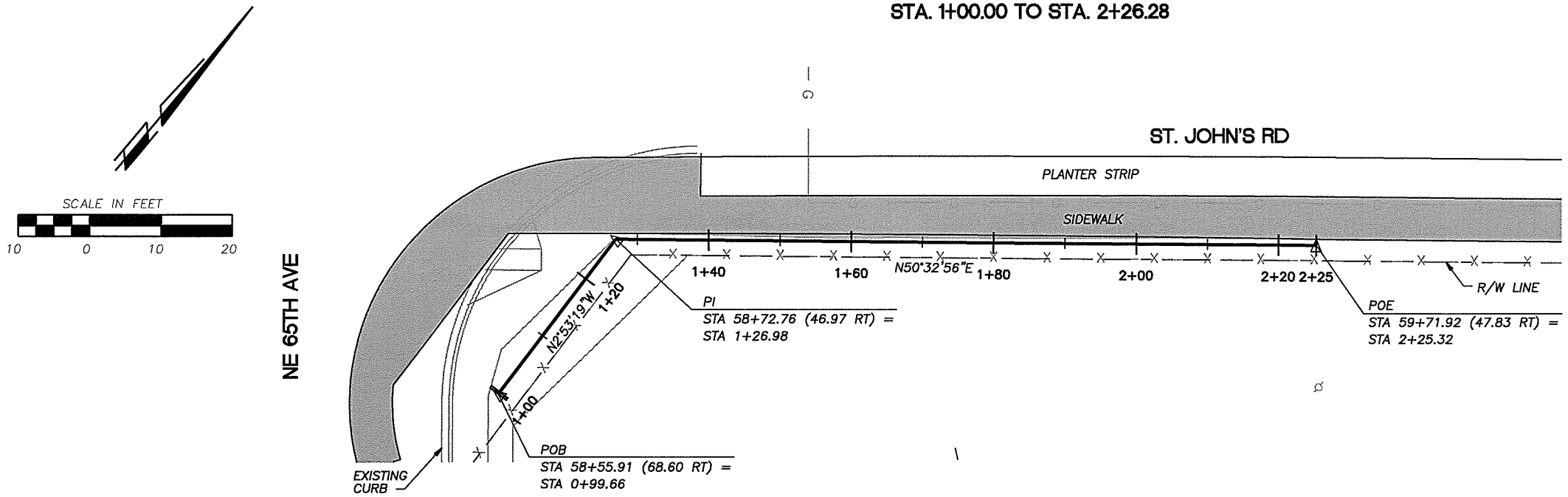

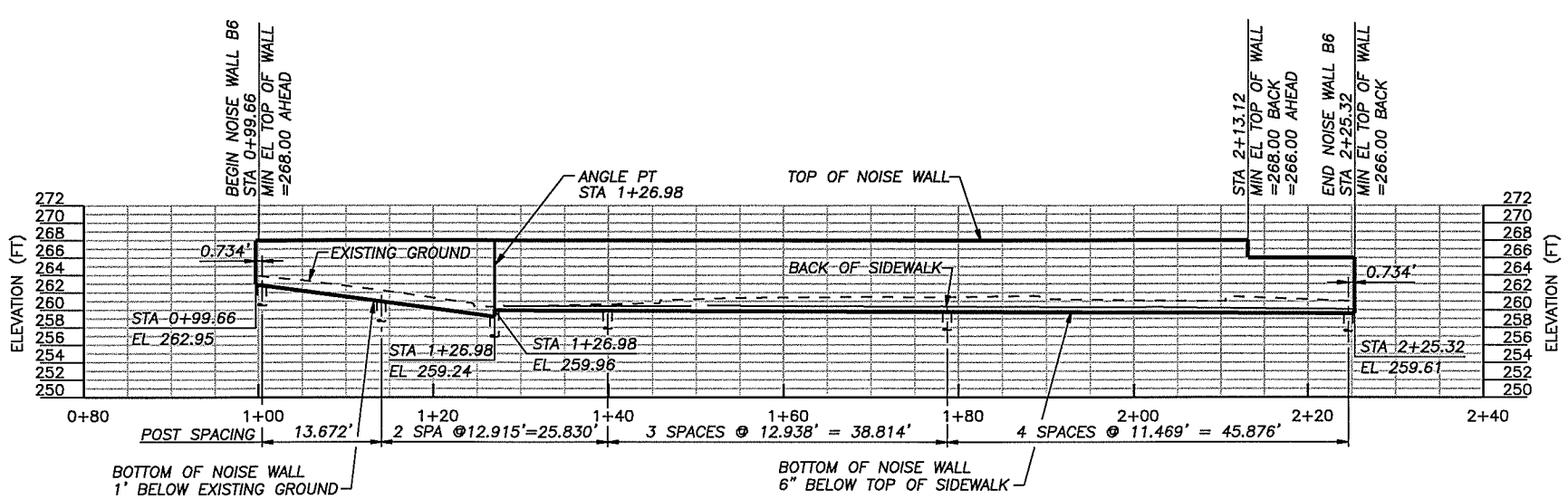

DESIGNED CEN
DRAWN DLM
CRP 301422
HOR. 1"=10'"
VERT. 1"=10'"
DATE 10/31/03
DWG: B06
SHEET 6 OF 26

CALL 48 HOURS BEFORE YOU DIG
1-800-553-4344
"It's the Law"
NORTHWEST UTILITIES NOTIFICATION CENTER

DESIGN & ENGINEERING DIVISION

ST. JOHNS RD. (NE 50TH TO NE 72ND)
RETAINING WALL 6

C. ERNEST NELSON
STATE OF WASHINGTON
13789
REGISTERED PROFESSIONAL ENGINEER
EXPIRES 10/29/

CH2MHILL

CLARK COUNTY WASHINGTON

16-OCT-2003 13:33:12
dmonk
NDM:154083180257wa06.dlv

WALL 7 (B7)
STA. 1+00.00 TO STA. 3+40.00

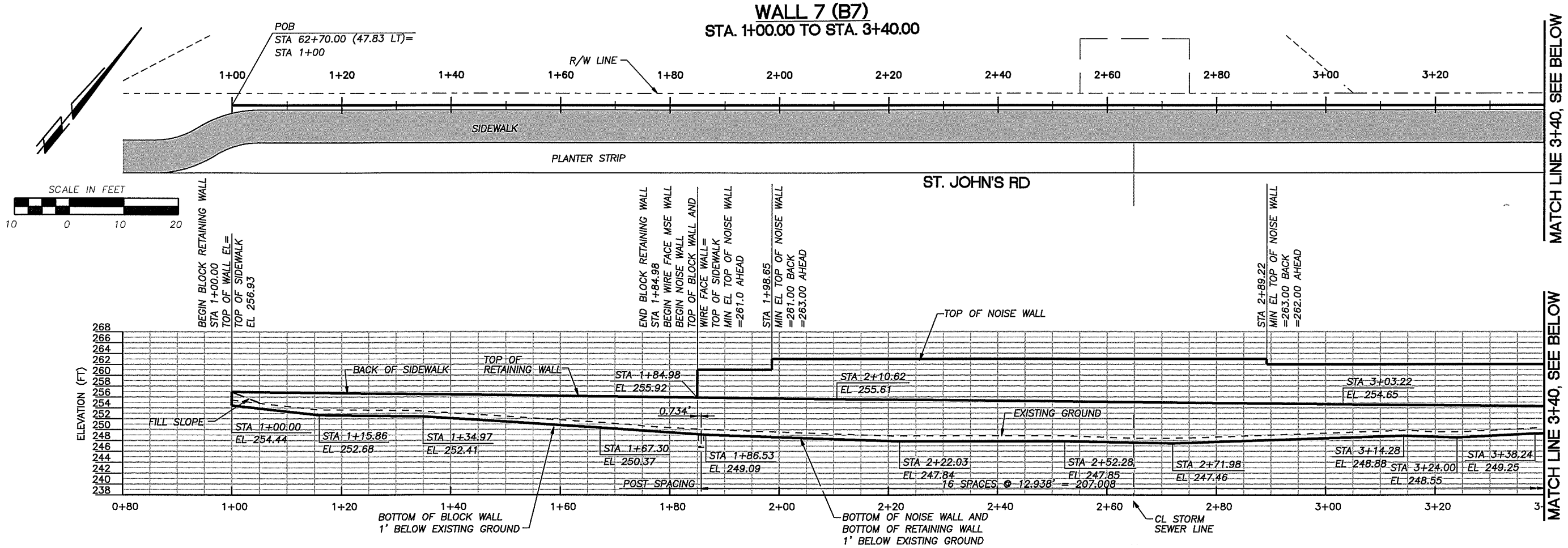

WALL 7 (B7)
STA. 3+40.00 TO STA. 4+07.00

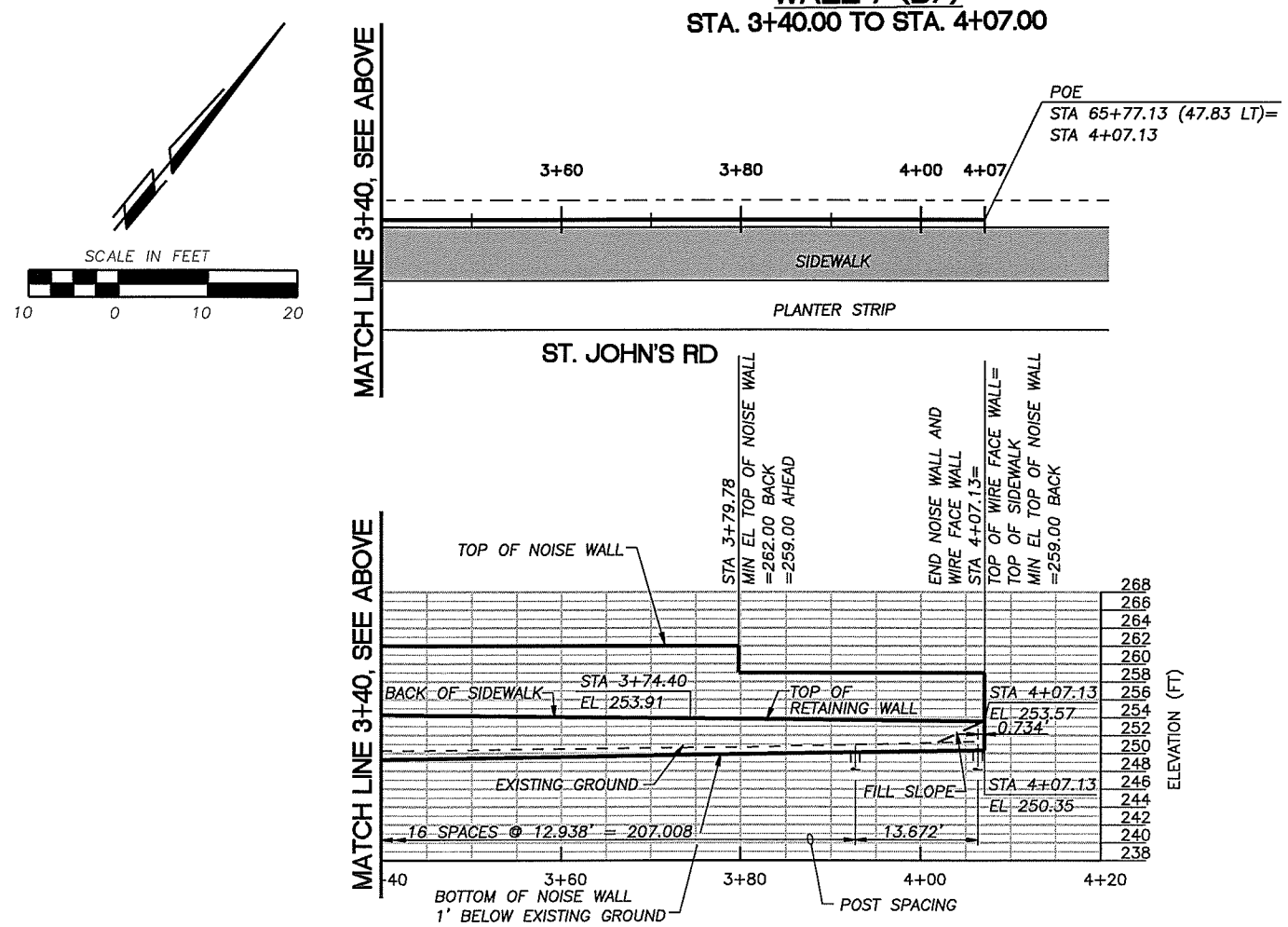

DESIGNED	CEN
DRAWN	DLM
CRP	301422
HOR.	1"=10'
VERT.	1"=10'
DATE	10/31/03
DWG:	B07
SHEET 7	OF 26

CALL 48 HOURS BEFORE YOU DIG 1-800-553-4344 "It's the Law" NORTHWEST UTILITY NOTIFICATION CENTER

DESIGN & ENGINEERING DIVISION

ST. JOHNS RD. (NE 50TH TO NE 72ND) RETAINING WALL 7

ERNEST NEASSON WASHINGTON STATE REGISTERED PROFESSIONAL ENGINEER

EXPIRES 10/29/

CH2MHILL

CLARK COUNTY WASHINGTON

03-NOV-2003 09:39

dmonk

NDM:1540831B0257wa07.dlv

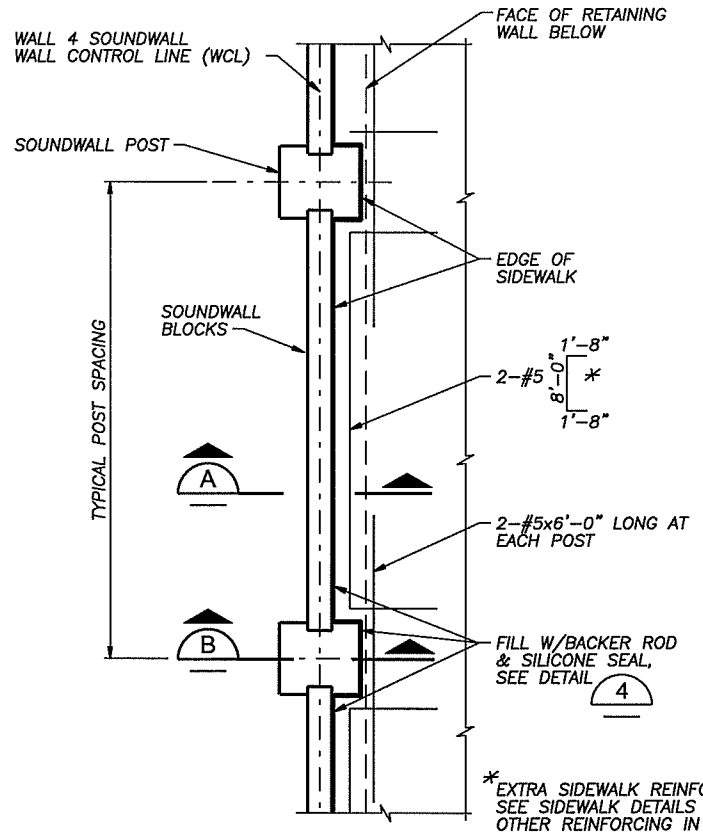

TYPICAL WALL PLAN AT SIDEWALK

1/2"=1'-0"
(SIDEWALK, SOUNDWALL INTERFACE TYPICAL AT ALL WALLS)
(WALLS 3, 5 & 6, OPPOSITE HAND)

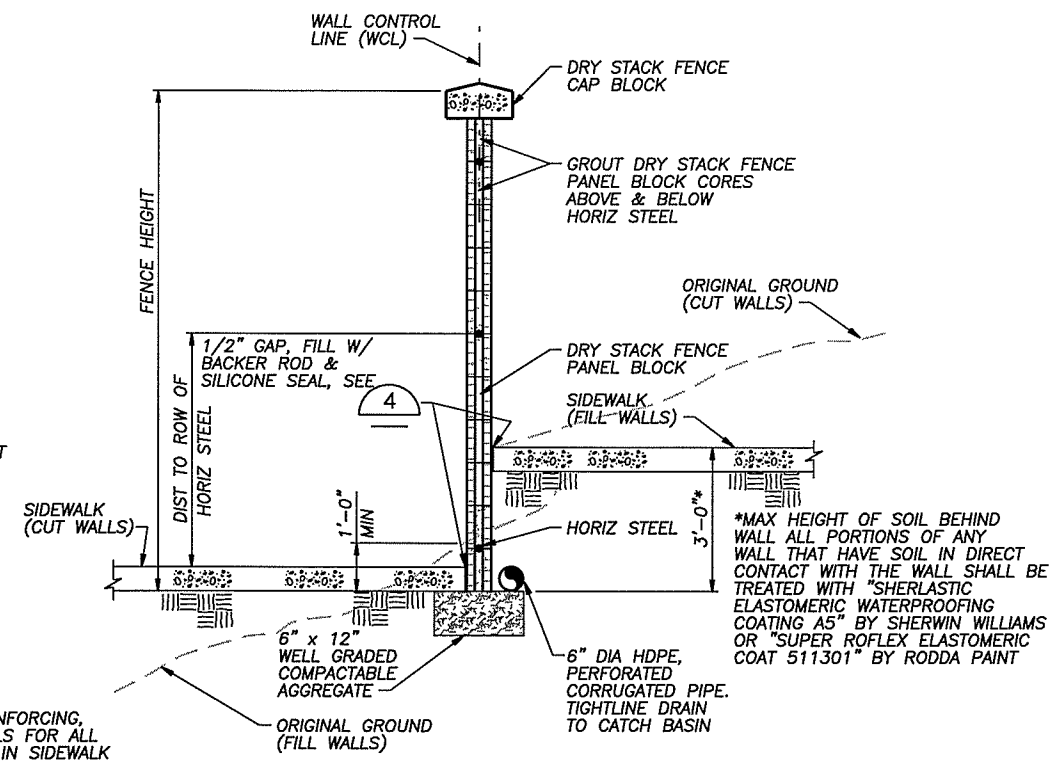

TYPICAL SECTION

SCALE: 1/2"=1'-0"
(WALLS 1, 2, 3 & 6)

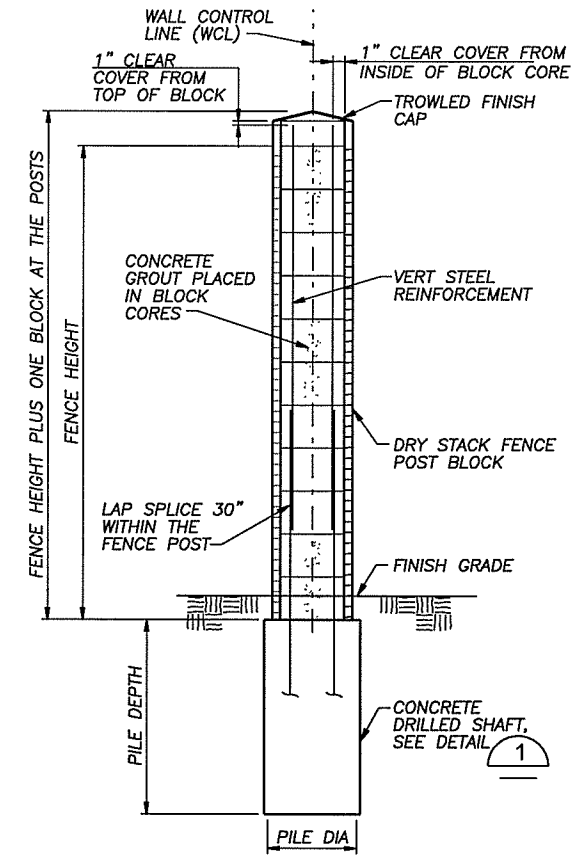

TYPICAL SECTION AT POST

SCALE: 1/2"=1'-0"
(WALL 1, 2, 3, 5, 6 & 7)
(WALL 4 SIMILAR EXCEPT FOR FOUNDATION)

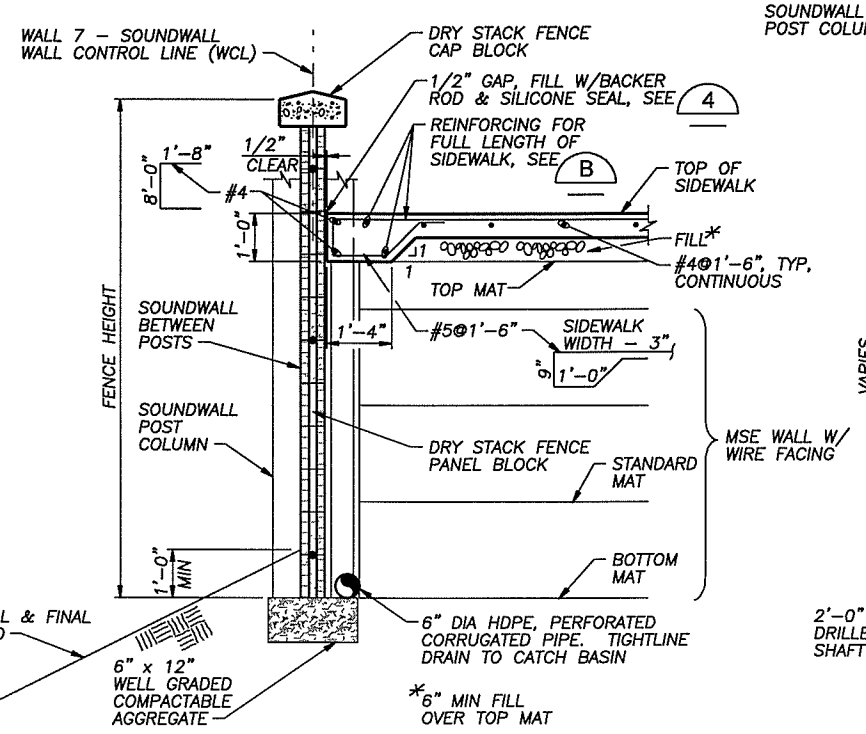

WALL 7 TYPICAL SECTION A

1/2"=1'-0"

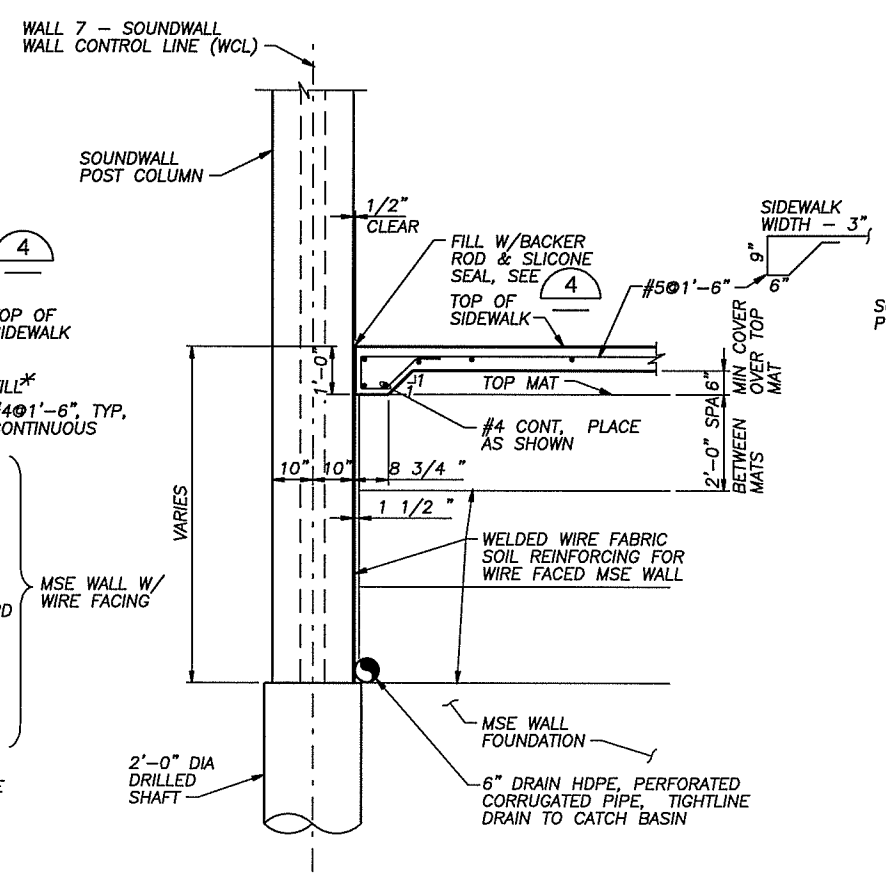

WALL 7 SOUNDWALL POST SECTION B

1/2"=1'-0"

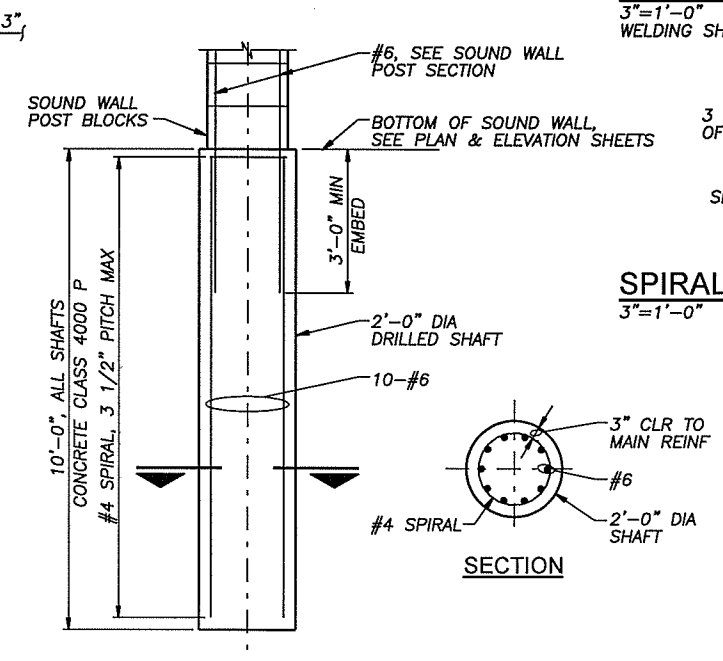

ELEVATION

DRILLED SHAFT DETAIL 1

1/2"=1'-0"

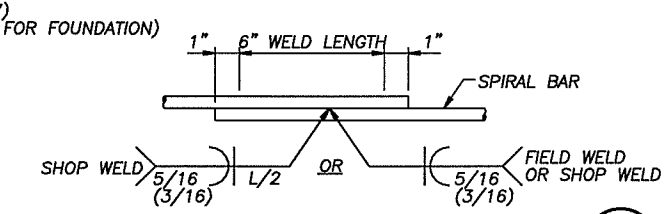

WELDED LAP SPLICE DETAIL 2

3"=1'-0"
WELDING SHALL MEE THE REQUIREMENTS OF STD SPEC 6-02.3(24)E

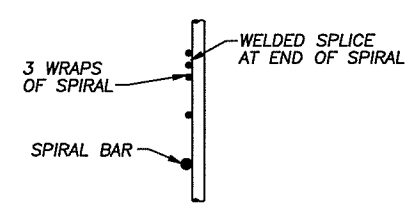

SPIRAL TERMINATION DETAIL 3

3"=1'-0"

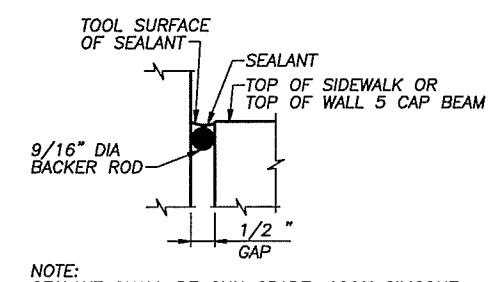

NOTE:
SEALANT SHALL BE GUN GRADE, 100% SILICONE, NON-SAG FORMULATION. PRIME CONCRETE SURFACE AS REQUIRED BY SEALANT MANUFACTURER'S WRITTEN INSTRUCTIONS.

SEALANT DETAIL 4

NO SCALE

B09, B10

DESIGNED CEN
DRAWN DLM
CRP 301422
HOR. 1/2"=1'-0"
VERT. 1/2"=1'-0"
DATE 10/31/03
DWG. B08
SHEET 8 OF 26

CALL 48 HOURS BEFORE YOU DIG 1-800-553-4344 "It's the Law" NORTHWEST UTILITIES NOTIFICATION CENTER

DESIGN & ENGINEERING DIVISION

ST. JOHNS RD. (NE 50TH TO NE 72ND)
RETAINING WALL SECTIONS 1

CH2MHILL

CLARK COUNTY WASHINGTON

31-Oct-2003 08:56:36
dmonk
NDM:154083\180257xs01.dlv

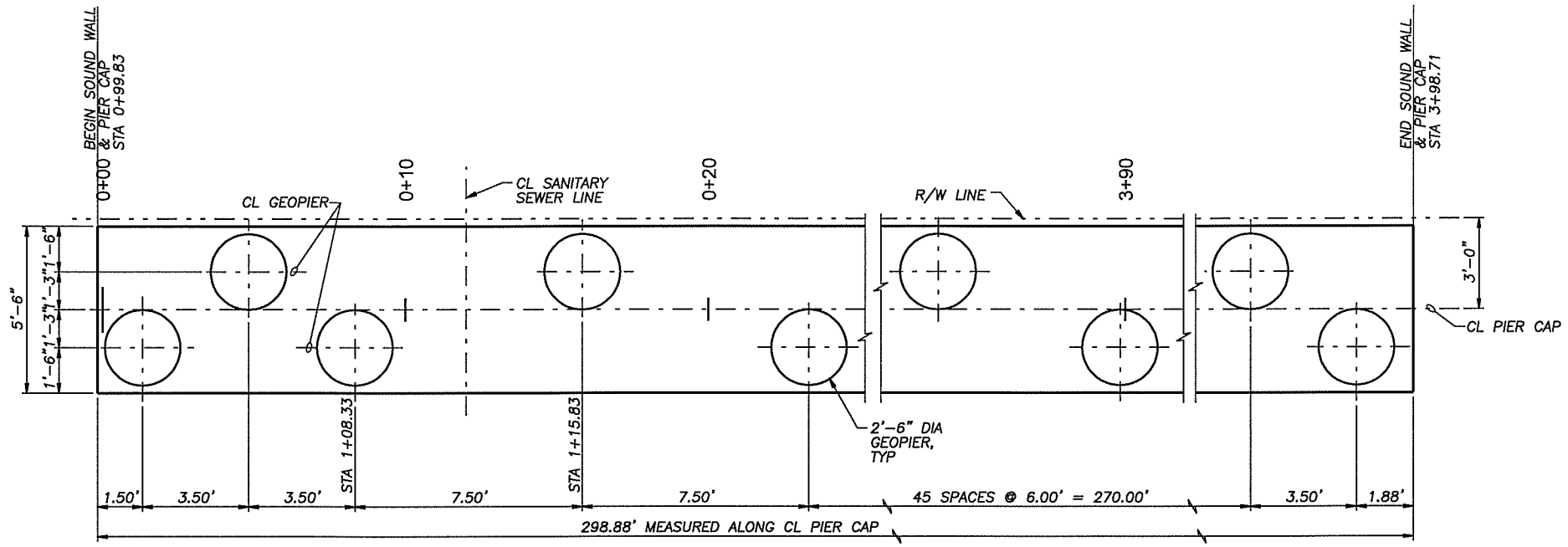

NOTE:
FOR ANGLE POINT NOT SHOWN, SEE ANGLE POINT FOOTING PLAN.

WALL 4 ENLARGED FOOTING PLAN
3/8"=1'-0"

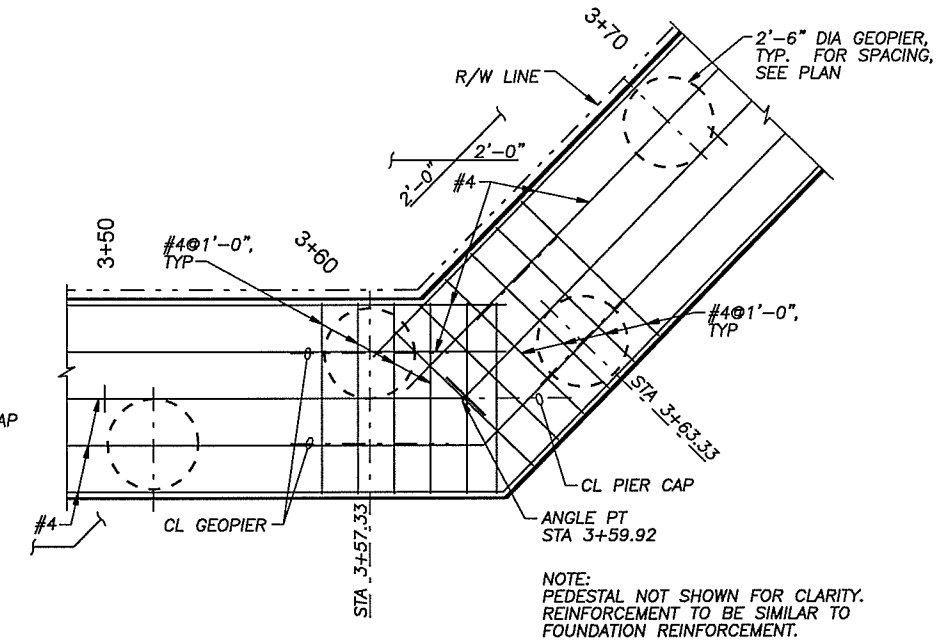

NOTE:
PEDESTAL NOT SHOWN FOR CLARITY. REINFORCEMENT TO BE SIMILAR TO FOUNDATION REINFORCEMENT.

WALL 4 ANGLE POINT FOOTING PLAN
3/8"=1'-0"

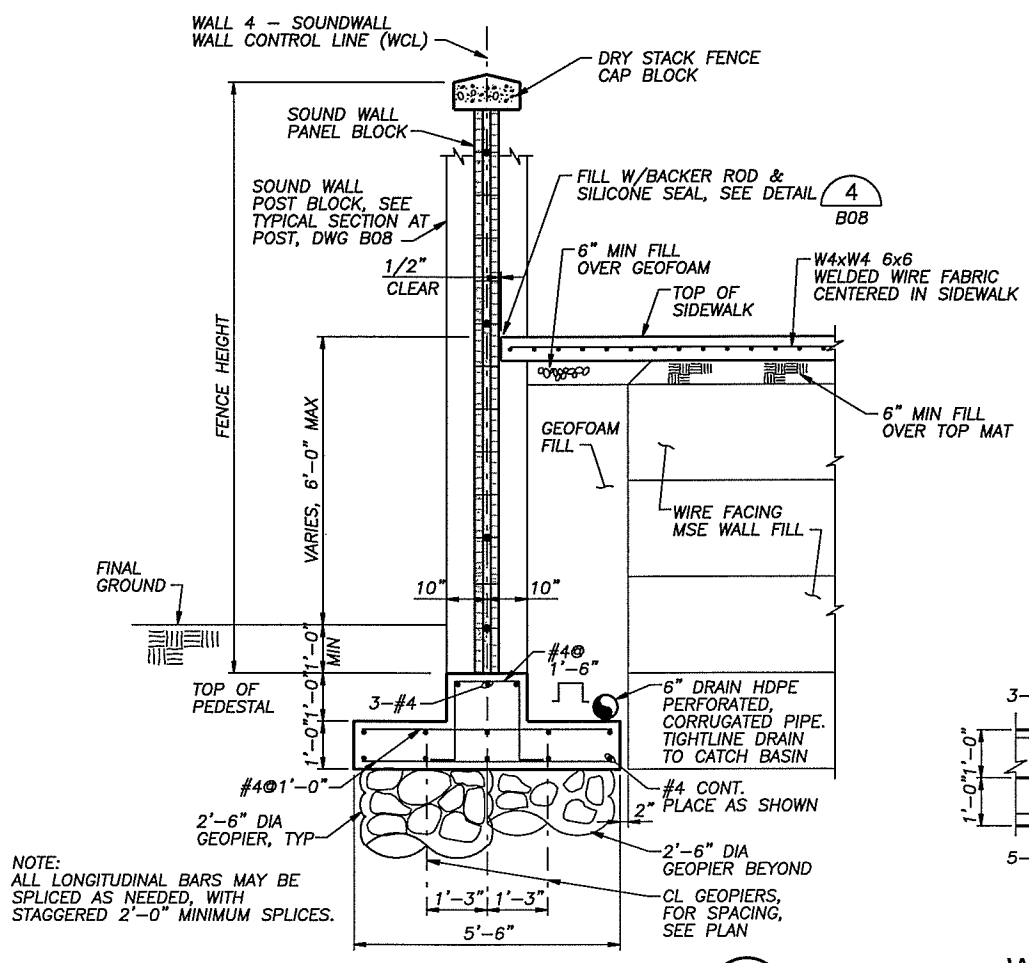

NOTE:
ALL LONGITUDINAL BARS MAY BE SPLICED AS NEEDED, WITH STAGGERED 2'-0" MINIMUM SPLICES.

WALL 4 TYPICAL SECTION A
1/2"=1'-0"

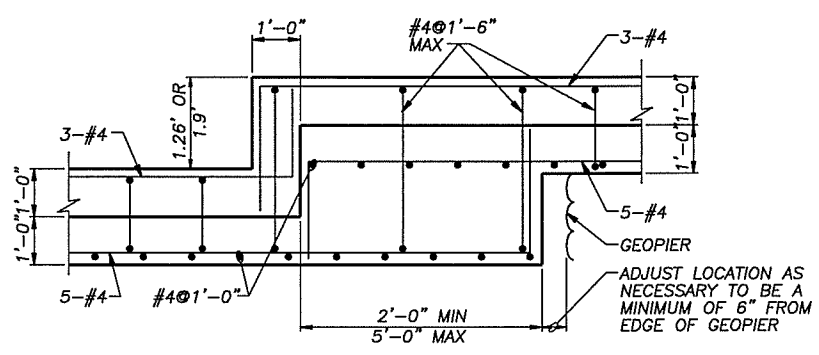

ELEVATION

WALL 4 FOOTING AND PEDESTAL STEP DETAIL 1
1/2"=1'-0"

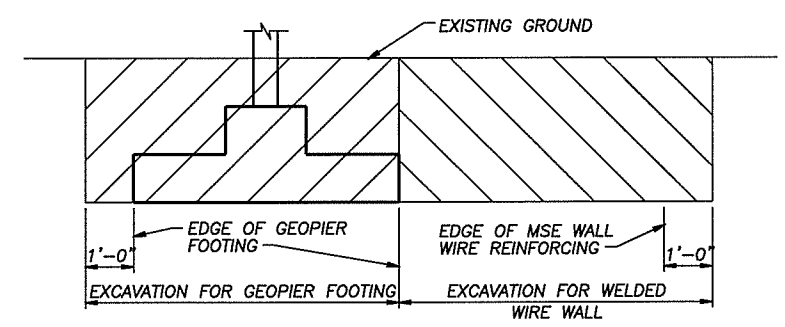

ELEVATION

EXCAVATION LIMITS DIAGRAM 2
1/2"=1'-0"
(WALL 4 SHOWN, WALL 7 SIMILAR W/O GEOPIER FOOTING)

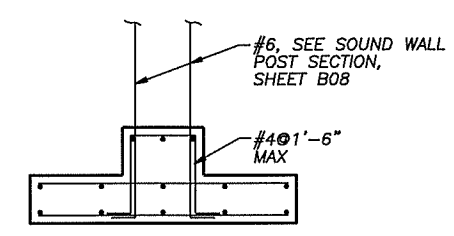

WALL 4 TYPICAL SECTION AT POST
1/2"=1'-0"

DESIGNED CEN
DRAWN DLM
CRP 301422
HOR. 1/2"=1'-0"
VERT. 1/2"=1'-0"
DATE 10/31/03
DWG: B09
SHEET 9 OF 26

CALL 48 HOURS BEFORE YOU DIG 1-800-553-4344 "It's the Law" NORTHWEST UTILITIES NOTIFICATION CENTER

DESIGN & ENGINEERING DIVISION

ST. JOHNS RD. (NE 50TH TO NE 72ND)
RETAINING WALL SECTIONS 2

CHRIST NELSON STATE OF WASHINGTON 18487 REGISTERED PROFESSIONAL ENGINEER EXPIRES 10/31/

CH2MHILL

CLARK COUNTY WASHINGTON

03-NOV-200309:32:06
dmonk
NDM:1540B3\180257xs02.dlv

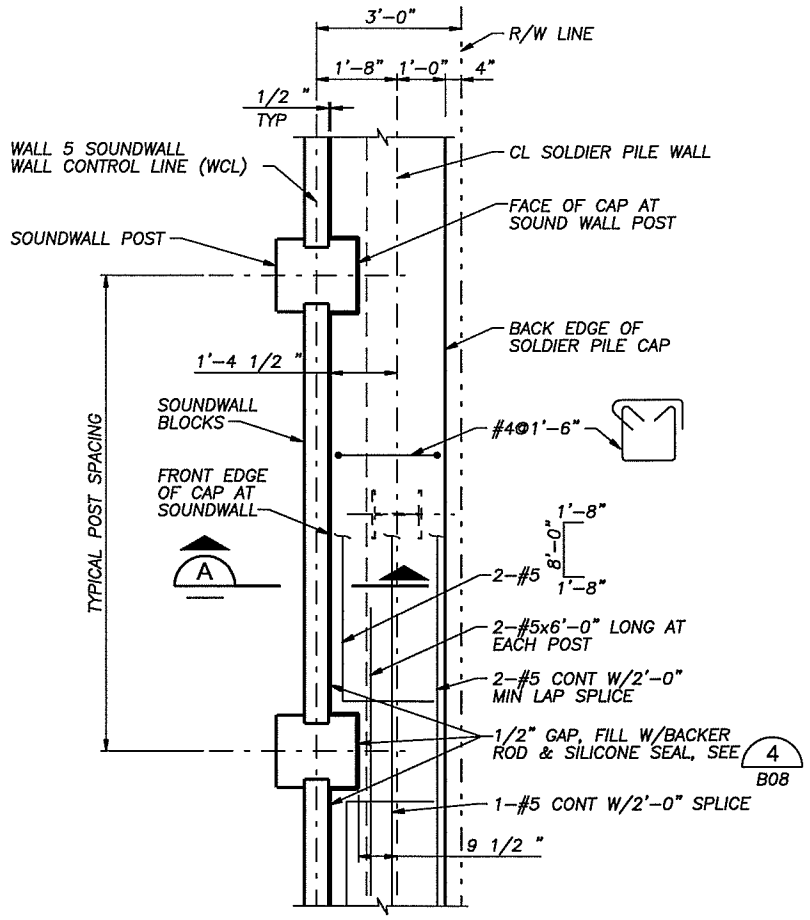

WALL 5 TOP PLAN - SOLDIER PILE CAP

1/2"=1'-0"

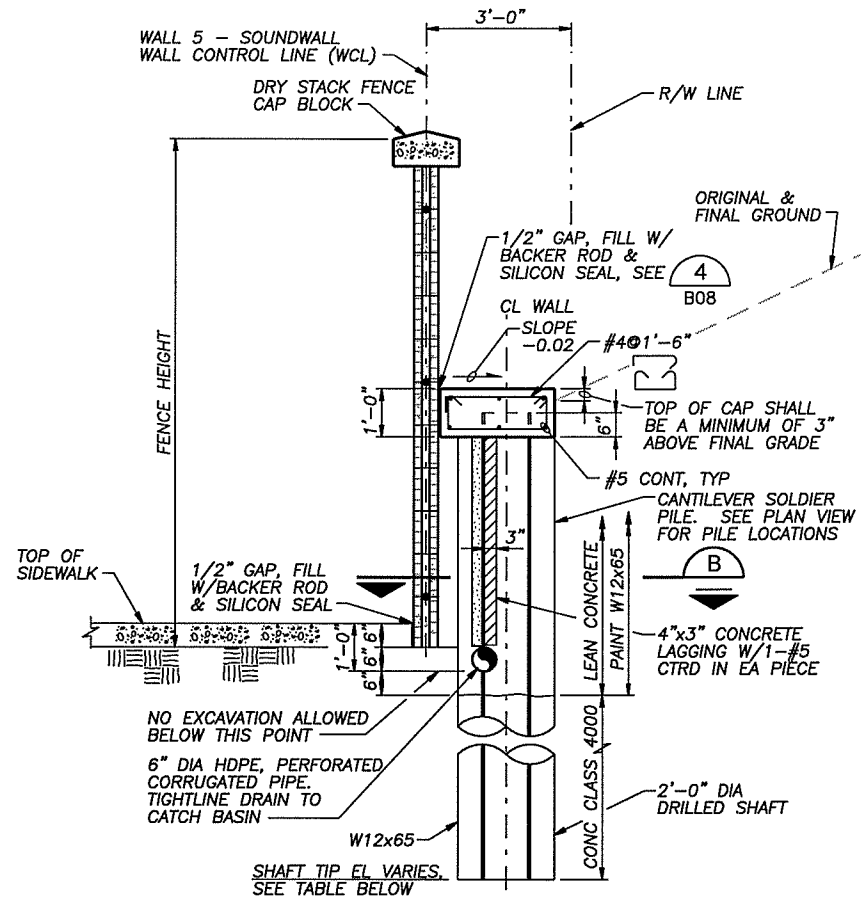

WALL 5 TYPICAL SECTION A

1/2"=1'-0"

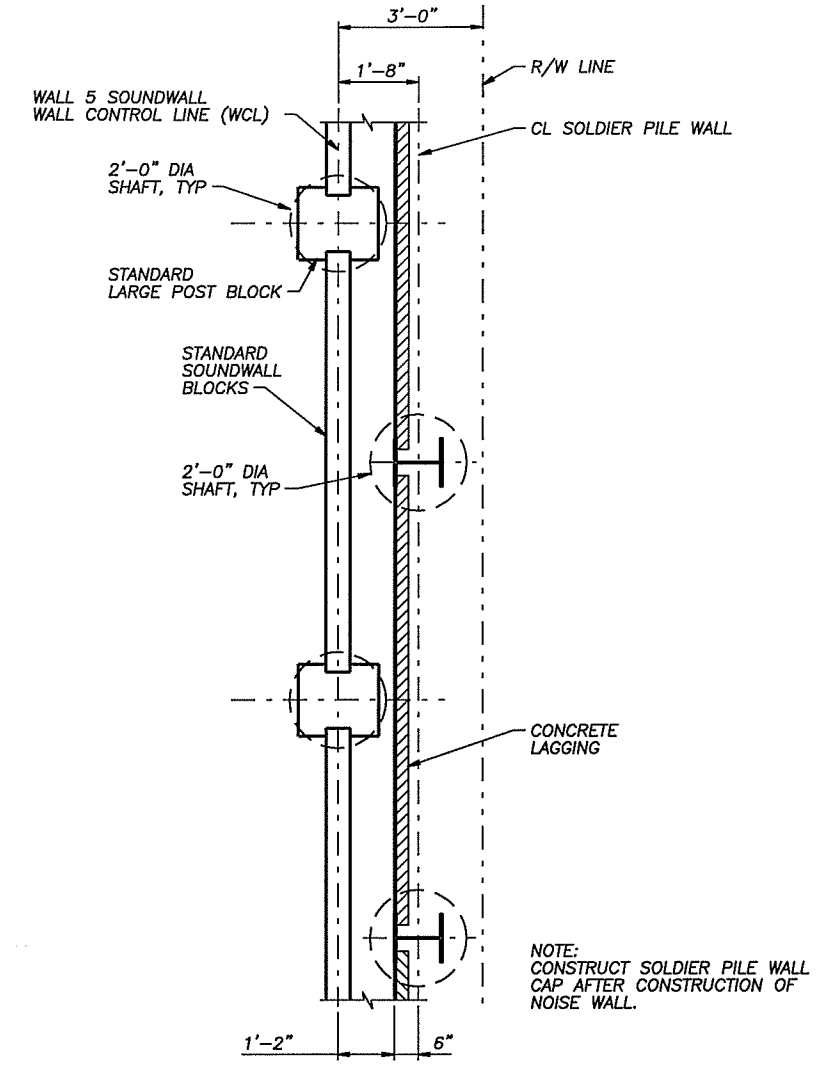

NOTE:
CONSTRUCT SOLDIER PILE WALL CAP AFTER CONSTRUCTION OF NOISE WALL.

SOLDIER PILE WALL & SOUNDWALL SECTION B

1/2"=1'-0"

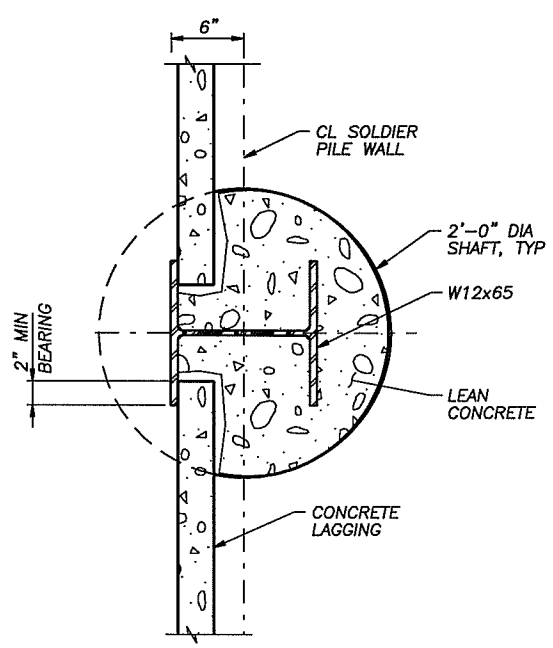

SOLDIER PILE DETAIL 1

1 1/2"=1'-0"

SOLDIER PILE LOCATION

STATION (FT.)	EMBED BELOW FINISH GRADE (FT.)
2+29.00	9
2+39.00	12
2+49.00	15
2+59.00	15
2+69.00	15
2+79.00	15
2+89.00	15
2+99.00	15
3+09.00	15
3+19.00	15
3+29.00	15
3+39.00	15
3+49.00	15
3+59.00	15
3+69.00	15
3+79.00	12
3+89.00	9

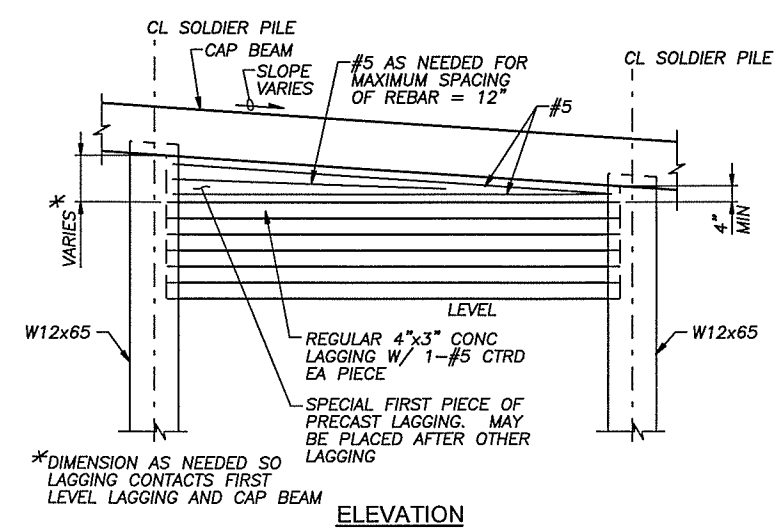

ELEVATION

LAGGING DETAIL 2

1/2"=1'-0"

DESIGNED CEN
DRAWN DLM
CRP 301422
HOR. 1/2"=1'-0"
VERT. 1/2"=1'-0"
DATE 10/31/03
DWG: B10
SHEET 10 OF 26

CALL 48 HOURS BEFORE YOU DIG 1-800-553-4344 "It's the Law" NORTHWEST UTILITIES NOTIFICATION CENTER

DESIGN & ENGINEERING DIVISION

ST. JOHNS RD. (NE 50TH TO NE 72ND)
RETAINING WALL SECTIONS 3

CHRIST NELSON STATE OF WASHINGTON 13788 REGISTERED PROFESSIONAL ENGINEER
EXPIRES 10/29/

CH2MHILL

CLARK COUNTY WASHINGTON

31-OCT-2003 15:10:21
dmonk
NDM:154083\80257xs01.div

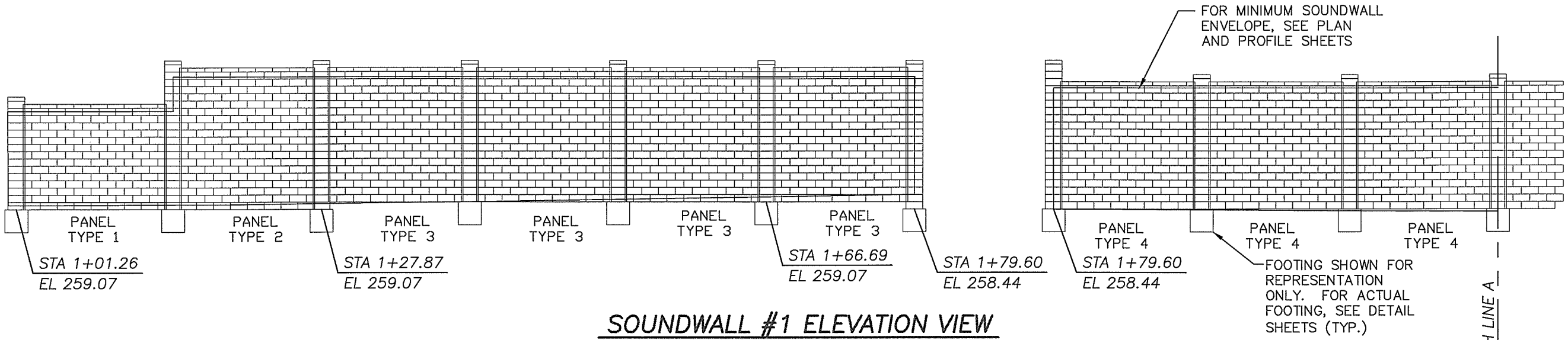

SOUNDWALL #1 ELEVATION VIEW
SECTION A

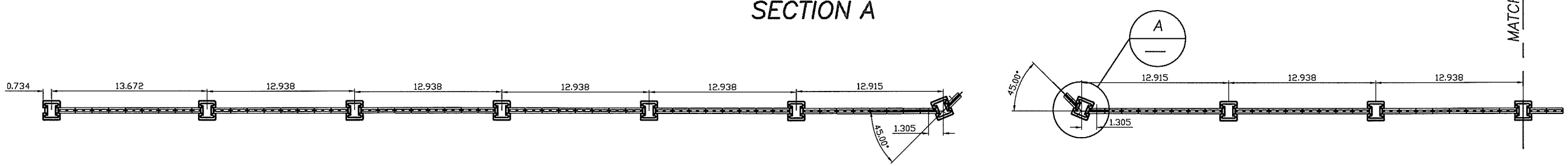

SOUNDWALL #1 PLAN VIEW
SECTION A

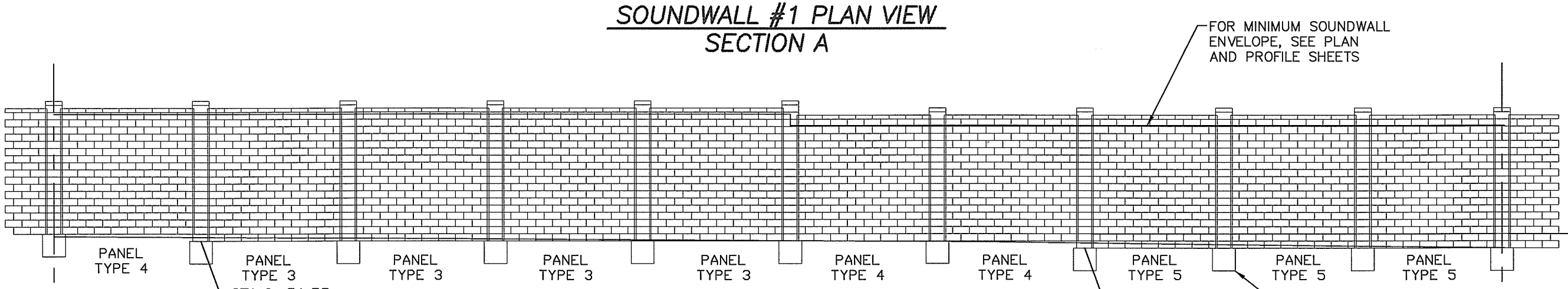

SOUNDWALL #1 ELEVATION VIEW
SECTION B

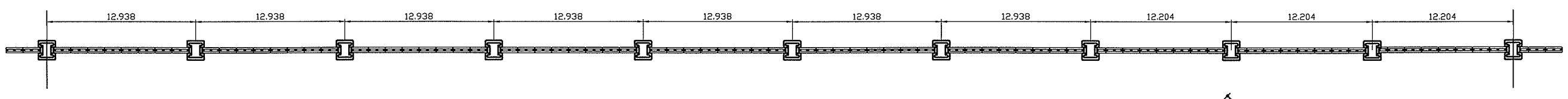

SOUNDWALL #1 PLAN VIEW
SECTION B

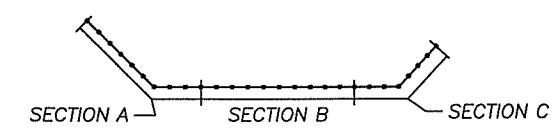

SOUNDWALL #1 KEYPLAN

DESIGNED AB/CEN
DRAWN AB/DLM
CRP 301422
HOR. 1"=10'-0"
VERT. 1"=10'-0"
DATE 10-22-03
DWG: B11
SHEET 11 OF 26

CALL 48 HOURS BEFORE YOU DIG
1-800-553-4344
"It's the Law"
NORTHWEST UTILITIES NOTIFICATION CENTER

DESIGN & ENGINEERING DIVISION

SOUNDWALL PLAN AND ELEVATIONS
SOUNDWALL #1

C. ERNEST NELSON
STATE OF WASHINGTON
13799
REGISTERED PROFESSIONAL ENGINEER
EXPIRES 10/29/__

CH2MHILL

CLARK COUNTY WASHINGTON

01-Nov-200308:42:26

NDM:180257: ABWall 1.dwg

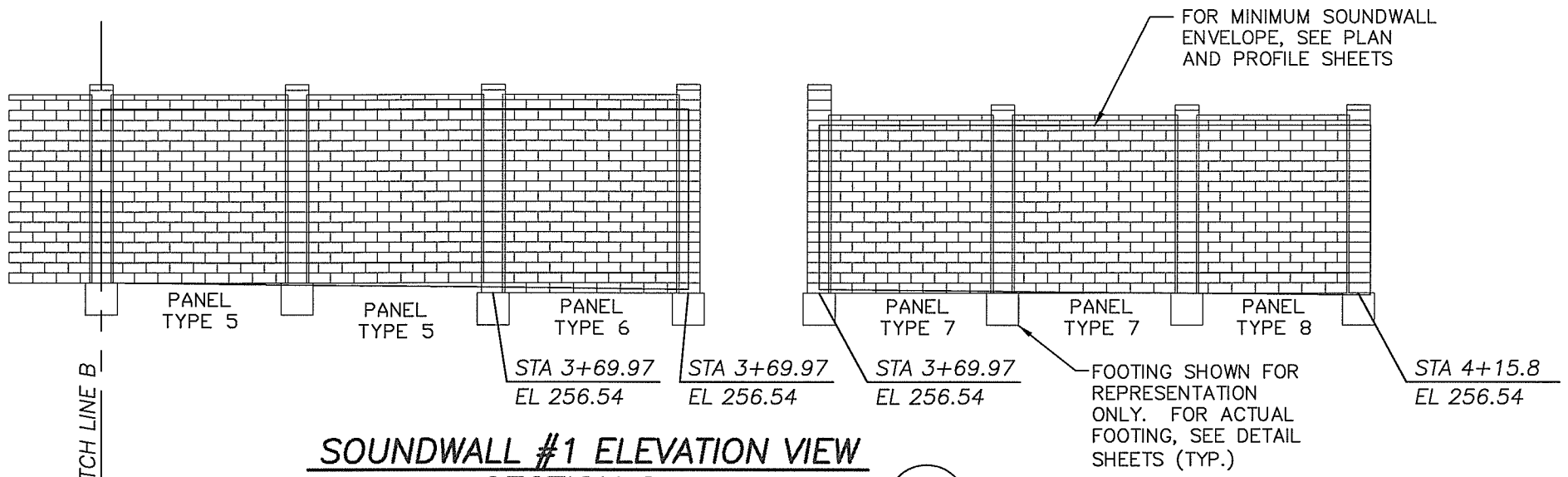

SOUNDWALL #1 ELEVATION VIEW
SECTION C

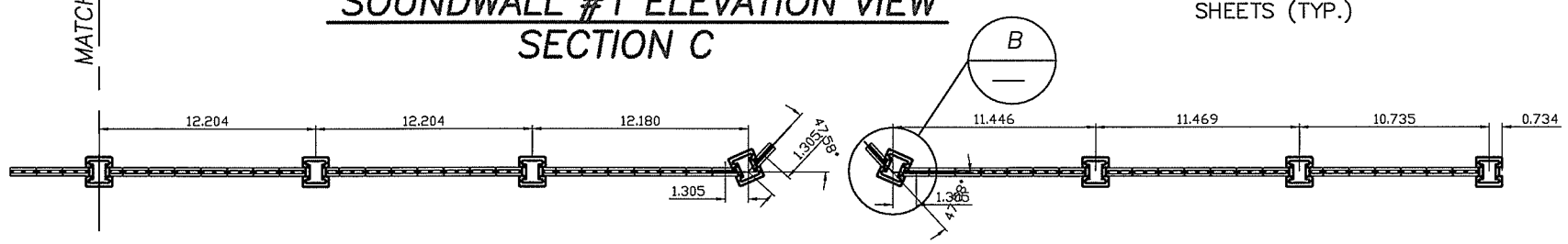

SOUNDWALL #1 PLAN VIEW
SECTION C

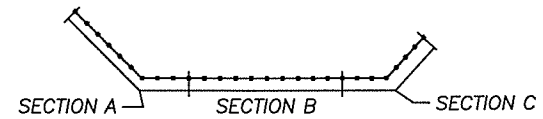

SOUNDWALL #1 KEYPLAN

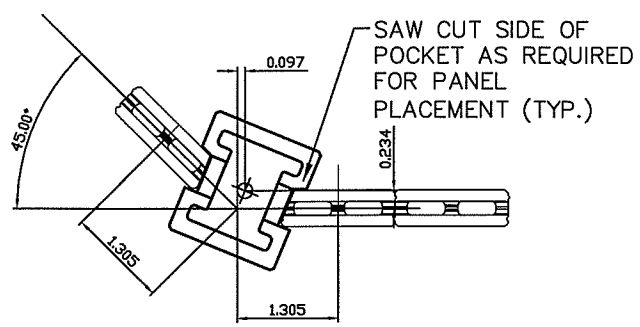

A — CORNER POST DETAIL
NO SCALE

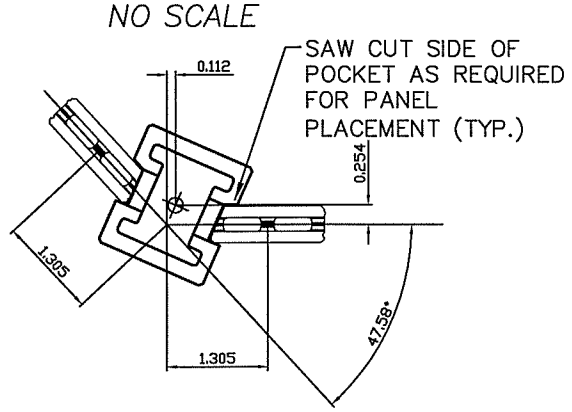

B — CORNER POST DETAIL
NO SCALE

ALLAN BLOCK FENCE PANEL TYPE TABLE

PANEL TYPE	PANEL LENGTH, BLOCK	PANEL HEIGHT, BLOCK	POST REINFORCEMENT	BOND BEAM REINFORCEMENT	BOND BEAM REINFORCEMENT LOCATION, COURSE #
TYPE 1	8.5 PANEL BLOCK	14 PANEL BLOCK	4 - #6	1 - #4 EACH	1, 7, 13
TYPE 2	8 PANEL BLOCK	19 PANEL BLOCK	4 - #6	1 - #4 EACH	1, 7, 13, 18
TYPE 3	8 PANEL BLOCK	18 PANEL BLOCK	4 - #6	1 - #4 EACH	1, 7, 12, 17
TYPE 4	8 PANEL BLOCK	17 PANEL BLOCK	4 - #6	1 - #4 EACH	1, 6, 11, 16
TYPE 5	7.5 PANEL BLOCK	18 PANEL BLOCK	4 - #6	1 - #4 EACH	1, 7, 12, 17
TYPE 6	7.5 PANEL BLOCK	19 PANEL BLOCK	4 - #6	1 - #4 EACH	1, 7, 13, 18
TYPE 7	7 PANEL BLOCK	17 PANEL BLOCK	4 - #6	1 - #4 EACH	1, 6, 11, 16
TYPE 8	6.5 PANEL BLOCK	17 PANEL BLOCK	4 - #6	1 - #4 EACH	1, 6, 11, 16

DESIGNED AB/CEN
DRAWN AB/DLM
CRP 301422
HOR. 1"=10'-0"
VERT. 1"=10'-0"
DATE 10-22-03
DWG: B12
SHEET 12 OF 26

CALL 48 HOURS BEFORE YOU DIG
1-800-553-4344
"It's the Law"
NORTHWEST UTILITIES NOTIFICATION CENTER

DESIGN & ENGINEERING DIVISION

SOUNDWALL PLAN AND ELEVATIONS
SOUNDWALL #1

STATE OF WASHINGTON
CHRIST NELSON
REGISTERED PROFESSIONAL ENGINEER
EXPIRES 10/29/__

CH2MHILL

CLARK COUNTY WASHINGTON

01-Nov-2003 08:42:26

NDM:180257: ABWall 1.dwg

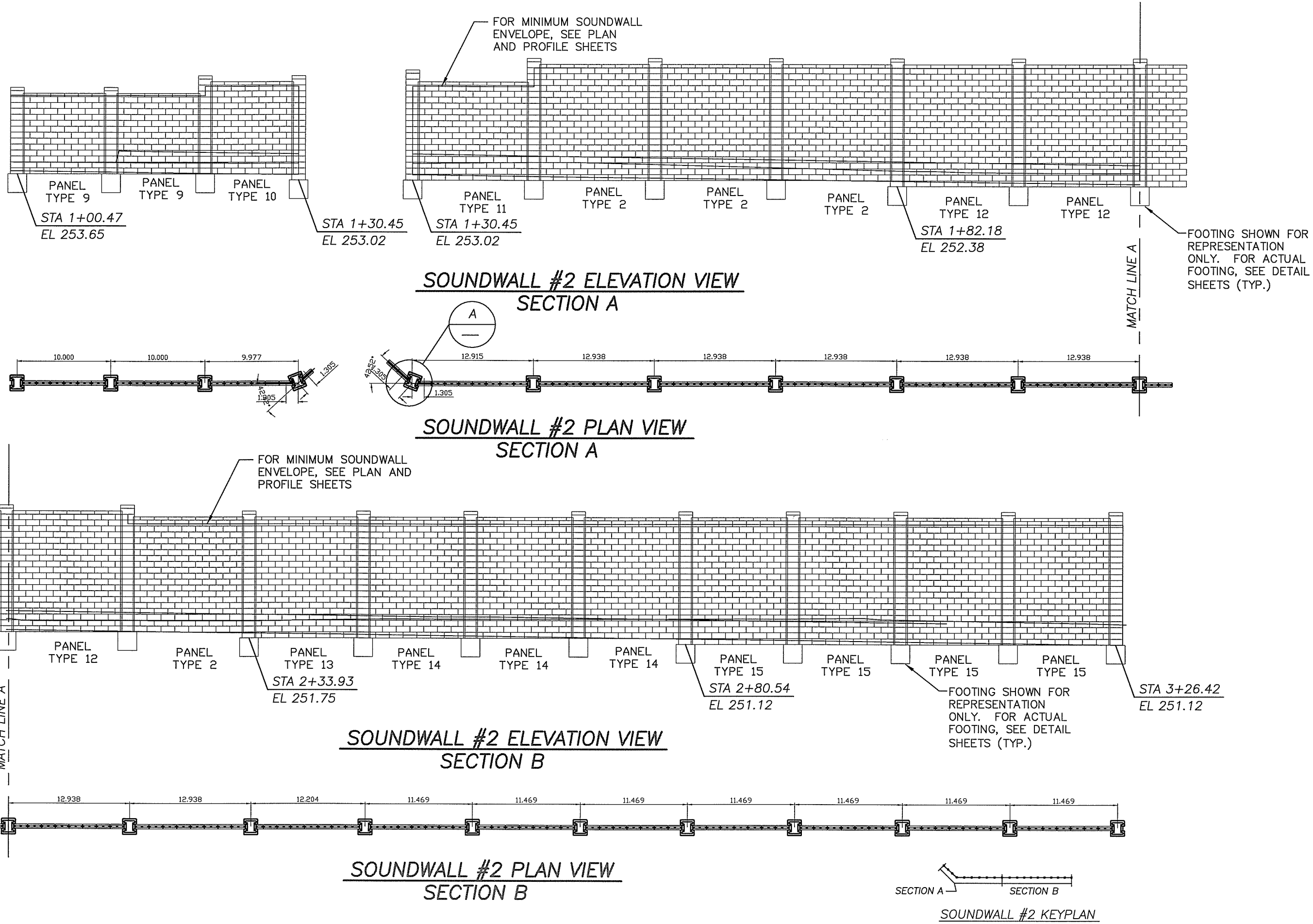

SOUNDWALL #2 ELEVATION VIEW
SECTION A

SOUNDWALL #2 PLAN VIEW
SECTION A

SOUNDWALL #2 ELEVATION VIEW
SECTION B

SOUNDWALL #2 PLAN VIEW
SECTION B

SOUNDWALL #2 KEYPLAN

DESIGNED AB/CEN
DRAWN AB/DLM
CRP 301422
HOR. 1"=10'-0"
VERT. 1"=10'-0"
DATE 10-22-03
DWG: B13
SHEET 13 OF 26

CALL 48 HOURS BEFORE YOU DIG
1-800-553-4344
"It's the Law"
NORTHWEST UTILITIES NOTIFICATION CENTER

DESIGN & ENGINEERING DIVISION

SOUNDWALL PLAN AND ELEVATIONS
SOUNDWALL #2

C. ERNEST NELSON
STATE OF WASHINGTON
13799
REGISTERED PROFESSIONAL ENGINEER
EXPIRES 10/29/__

CH2MHILL

CLARK COUNTY WASHINGTON

01-Nov-200308:42:26

NDM:180257: ABWALL 2.DWG

ALLAN BLOCK FENCE PANEL TYPE TABLE

PANEL TYPE	PANEL LENGTH, BLOCK	PANEL HEIGHT, BLOCK	POST REINFORCEMENT	BOND BEAM REINFORCEMENT	BOND BEAM REINFORCEMENT LOCATION, COURSE #
TYPE 2	8 PANEL BLOCK	19 PANEL BLOCK	4 - #6	1 - #4 EACH	1, 7, 13, 18
TYPE 9	6 PANEL BLOCK	13 PANEL BLOCK	4 - #6	1 - #4 EACH	1, 7, 12
TYPE 10	6 PANEL BLOCK	15 PANEL BLOCK	4 - #6	1 - #4 EACH	1, 8, 14
TYPE 11	8 PANEL BLOCK	16 PANEL BLOCK	4 - #6	1 - #4 EACH	1, 8, 15
TYPE 12	8 PANEL BLOCK	20 PANEL BLOCK	4 - #6	1 - #4 EACH	1, 7, 13, 19
TYPE 13	7.5 PANEL BLOCK	20 PANEL BLOCK	4 - #6	1 - #4 EACH	1, 7, 13, 19
TYPE 14	7 PANEL BLOCK	20 PANEL BLOCK	4 - #6	1 - #4 EACH	1, 7, 13, 19
TYPE 15	7 PANEL BLOCK	21 PANEL BLOCK	4 - #6	1 - #4 EACH	1, 8, 14, 20

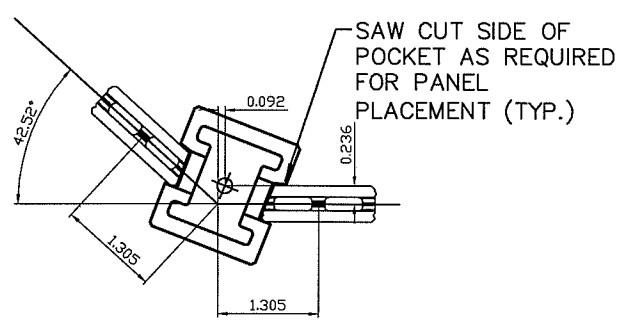

A — CORNER POST DETAIL

NO SCALE

DESIGNED AB/CEN
DRAWN AB/DLM
CRP 301422
HOR. 1"=10'-0"
VERT. 1"=10'-0"
DATE 10-22-03
DWG: B14
SHEET 14 OF 26

CALL 48 HOURS BEFORE YOU DIG
1-800-553-4344
"It's the Law"
NORTHWEST UTILITIES NOTIFICATION CENTER

DESIGN & ENGINEERING DIVISION

SOUNDWALL PLAN AND ELEVATIONS
SOUNDWALL #2

C. ERNEST NELSON
STATE OF WASHINGTON
13799
REGISTERED PROFESSIONAL ENGINEER
EXPIRES 10/29/__

CH2MHILL

CLARK COUNTY WASHINGTON

01-Nov-200308:42:26

NDM:180257: ABWall 2.dwg

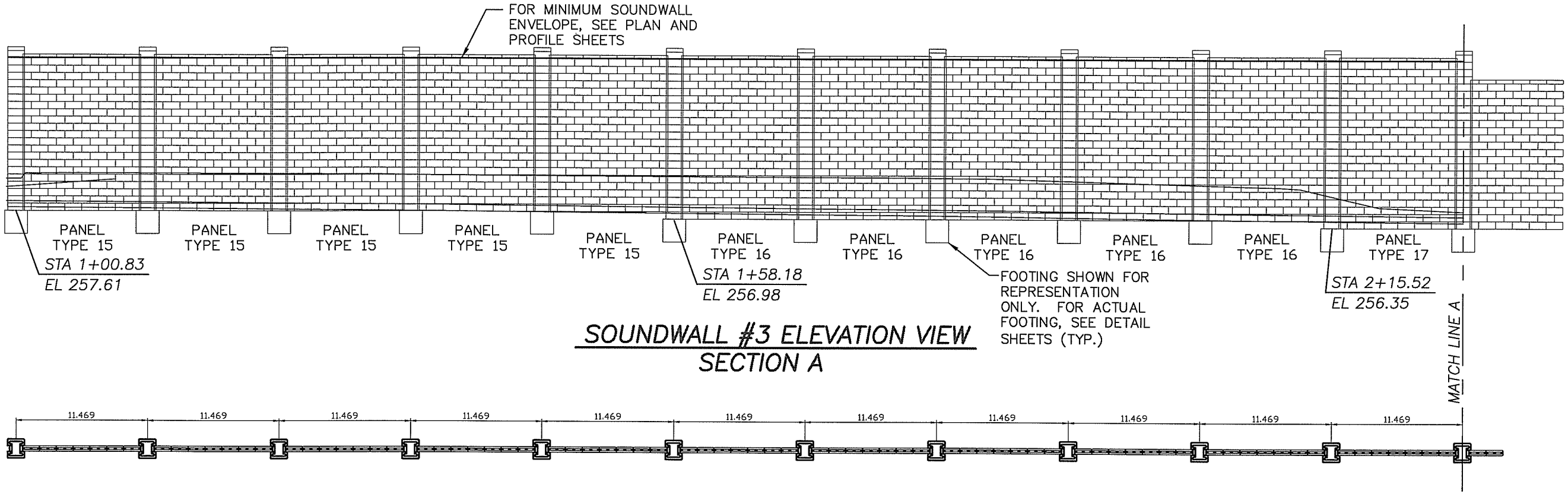

SOUNDWALL #3 ELEVATION VIEW
SECTION A

SOUNDWALL #3 PLAN VIEW
SECTION A

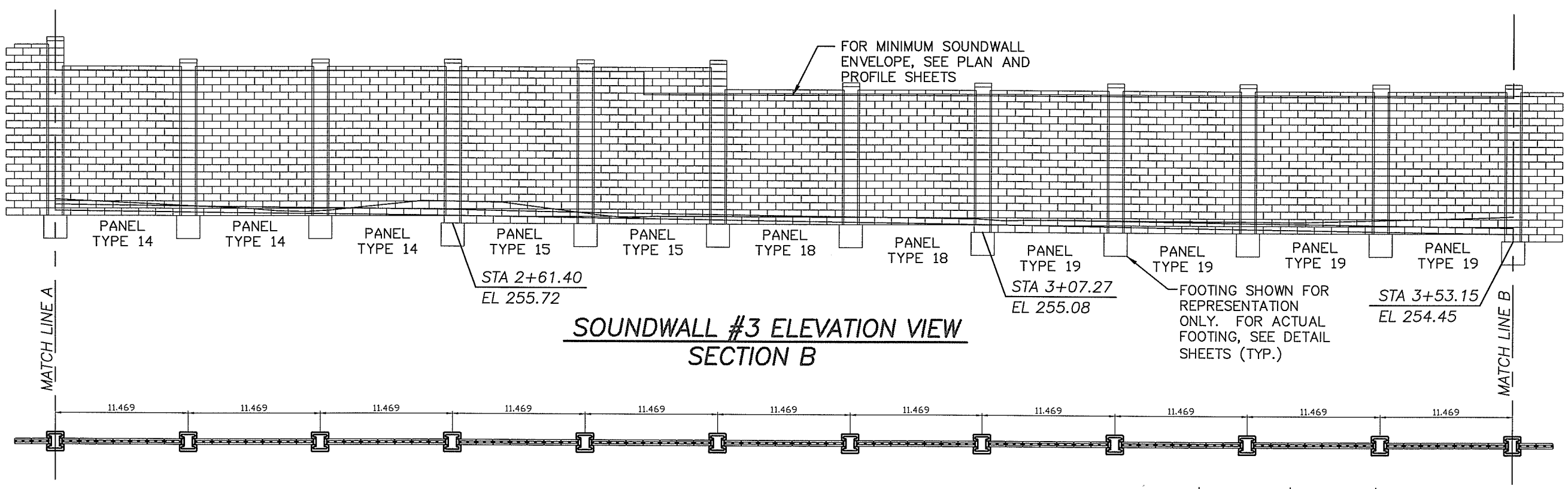

SOUNDWALL #3 ELEVATION VIEW
SECTION B

SOUNDWALL #3 PLAN VIEW
SECTION B

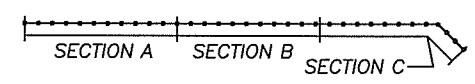

SOUNDWALL #3 KEYPLAN

DESIGNED Engineer
DRAWN Drawn
CRP 301422
HOR. 1"=10'-0"
VERT. 1"=10'-0"
DATE 10-22-03
DWG: B15
SHEET 15 OF 26

CALL 48 HOURS BEFORE YOU DIG
1-800-553-4344
"It's the Law"
NORTHWEST UTILITIES NOTIFICATION CENTER

DESIGN & ENGINEERING DIVISION

SOUNDWALL PLAN AND ELEVATIONS
SOUNDWALL #3

STATE OF WASHINGTON
CRAIG NELSON
PROFESSIONAL ENGINEER
EXPIRES 10/29/—

CH2MHILL

CLARK COUNTY WASHINGTON

01-NOV-2003 08:42:26

NDM:180257: ABWALL 3.DWG

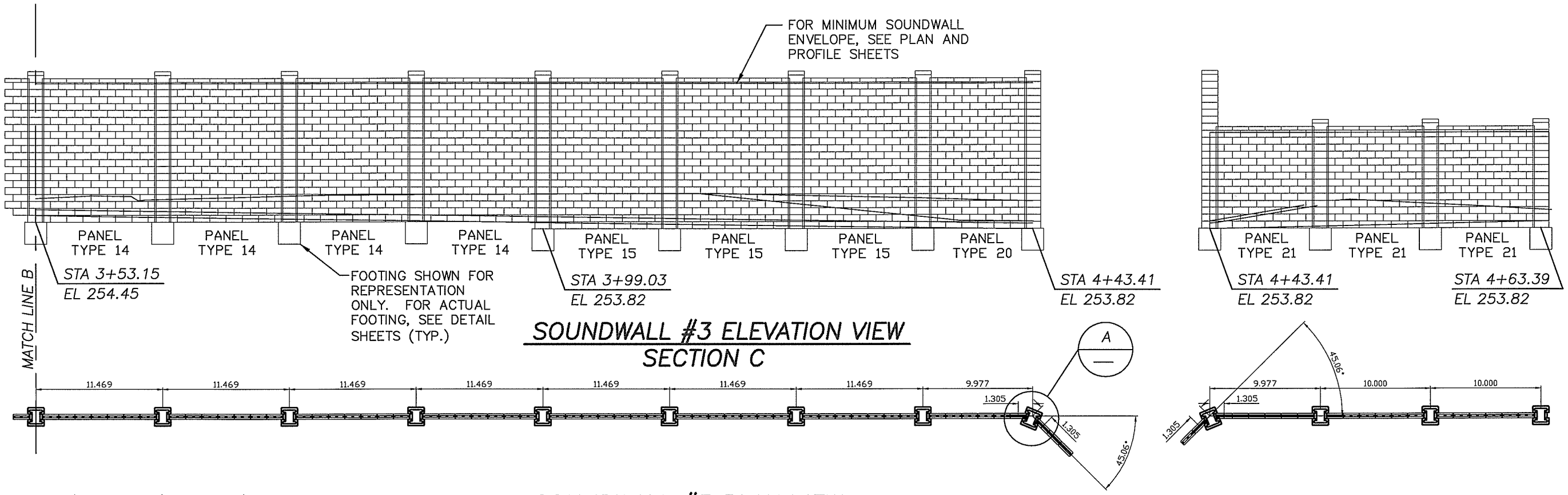

SOUNDWALL #3 ELEVATION VIEW
SECTION C

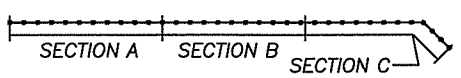

SOUNDWALL #3 KEYPLAN

SOUNDWALL #3 PLAN VIEW
SECTION C

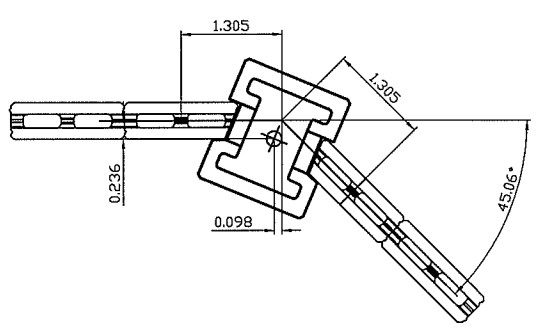

A

CORNER POST DETAIL
NO SCALE

ALLAN BLOCK FENCE PANEL TYPE TABLE

PANEL TYPE	PANEL LENGTH, BLOCK	PANEL HEIGHT, BLOCK	POST REINFORCEMENT	BOND BEAM REINFORCEMENT	BOND BEAM REINFORCEMENT LOCATION, COURSE #
TYPE 14	7 PANEL BLOCK	20 PANEL BLOCK	4 - #6	1 - #4 EACH	1, 7, 13, 19
TYPE 15	7 PANEL BLOCK	21 PANEL BLOCK	4 - #6	1 - #4 EACH	1, 8, 14, 20
TYPE 16	7 PANEL BLOCK	22 PANEL BLOCK	4 - #6	1 - #4 EACH	1, 8, 15, 21
TYPE 17	7 PANEL BLOCK	23 PANEL BLOCK	4 - #6	1 - #4 EACH	1, 8, 15, 22
TYPE 18	7 PANEL BLOCK	18 PANEL BLOCK	4 - #6	1 - #4 EACH	1, 7, 13, 18
TYPE 19	7 PANEL BLOCK	19 PANEL BLOCK	4 - #6	1 - #4 EACH	1, 7, 13, 19
TYPE 20	6 PANEL BLOCK	21 PANEL BLOCK	4 - #6	1 - #4 EACH	1, 8, 14, 20
TYPE 21	6 PANEL BLOCK	14 PANEL BLOCK	4 - #6	1 - #4 EACH	1, 7, 13

DESIGNED Engineer
DRAWN Drawn
CRP 301422
HOR. 1"=10'-0"
VERT. 1"=10'-0"
DATE 10-22-03
DWG: B16
SHEET 16 OF 26

CALL 48 HOURS BEFORE YOU DIG
1-800-553-4344
"It's the Law"
NORTHWEST UTILITIES NOTIFICATION CENTER

DESIGN & ENGINEERING DIVISION

SOUNDWALL PLAN AND ELEVATIONS
SOUNDWALL #3

C. ERNEST NELSON
STATE OF WASHINGTON
13799
REGISTERED PROFESSIONAL ENGINEER
EXPIRES 10/29/__

CH2MHILL

CLARK COUNTY WASHINGTON

01-nov-2002

NDM:180257: ABWall 3.dwg

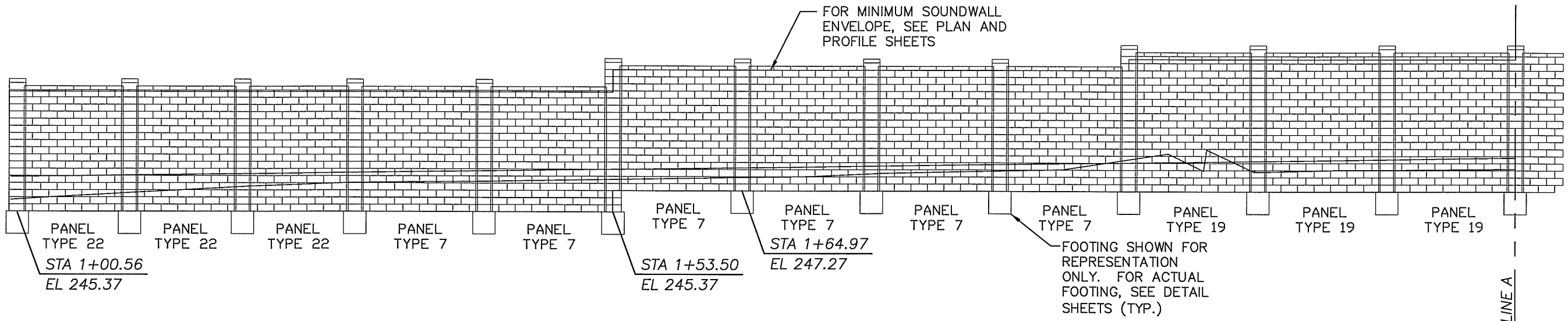

SOUNDWALL #4 ELEVATION VIEW
SECTION A

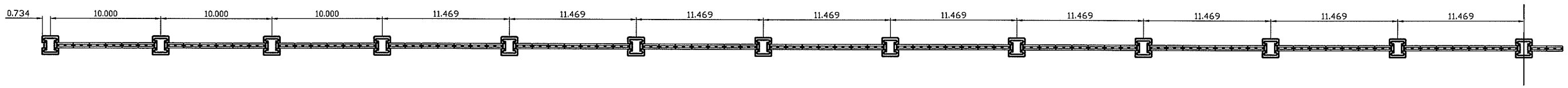

SOUNDWALL #4 PLAN VIEW
SECTION A

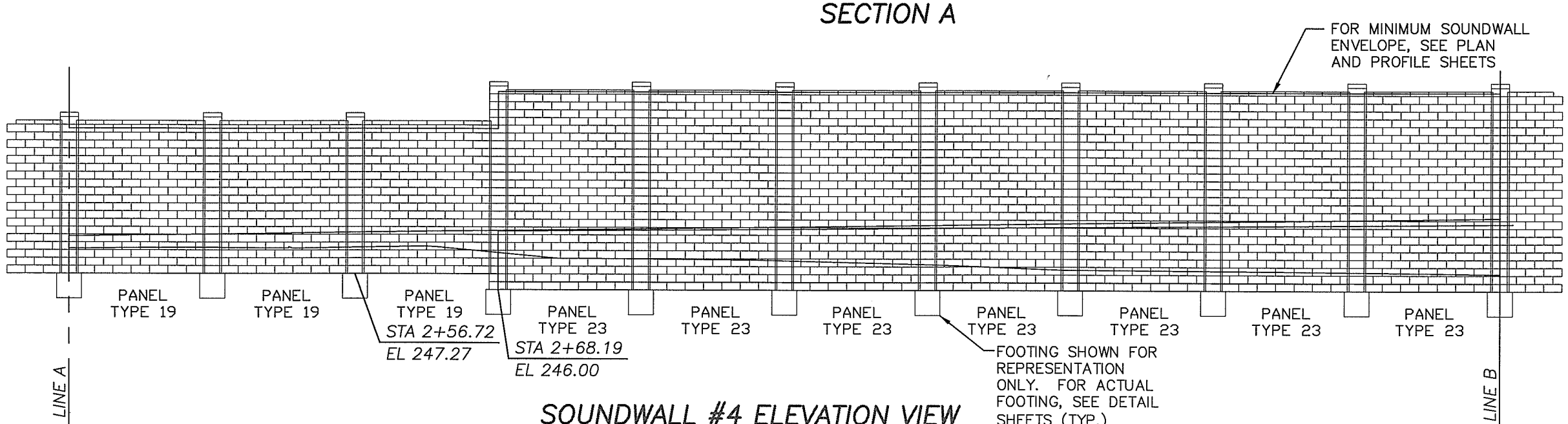

SOUNDWALL #4 ELEVATION VIEW
SECTION B

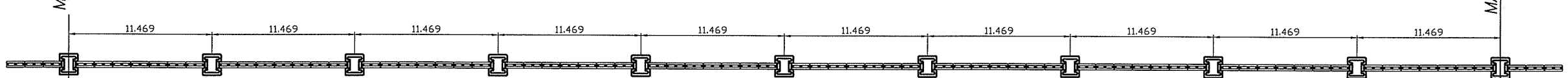

SOUNDWALL #4 PLAN VIEW
SECTION B

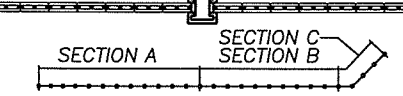

SOUNDWALL #4 KEYPLAN

DESIGNED Engineer
DRAWN Drawn
CRP 301422
HOR. 1"=10'-0"
VERT. 1"=10'-0"
DATE 10-22-03
DWG: B17
SHEET 17 OF 26

CALL 48 HOURS BEFORE YOU DIG
1-800-553-4344
"It's the Law"
NORTHWEST UTILITIES NOTIFICATION CENTER

DESIGN & ENGINEERING DIVISION

SOUNDWALL PLAN AND ELEVATIONS
SOUNDWALL #4

C. ERNEST NELSON
STATE OF WASHINGTON
13799
REGISTERED PROFESSIONAL ENGINEER
EXPIRES 10/29/__

CH2MHILL

CLARK COUNTY WASHINGTON

NDM:180257: ABWall 4a.dwg
01-Nov-200208:42:26

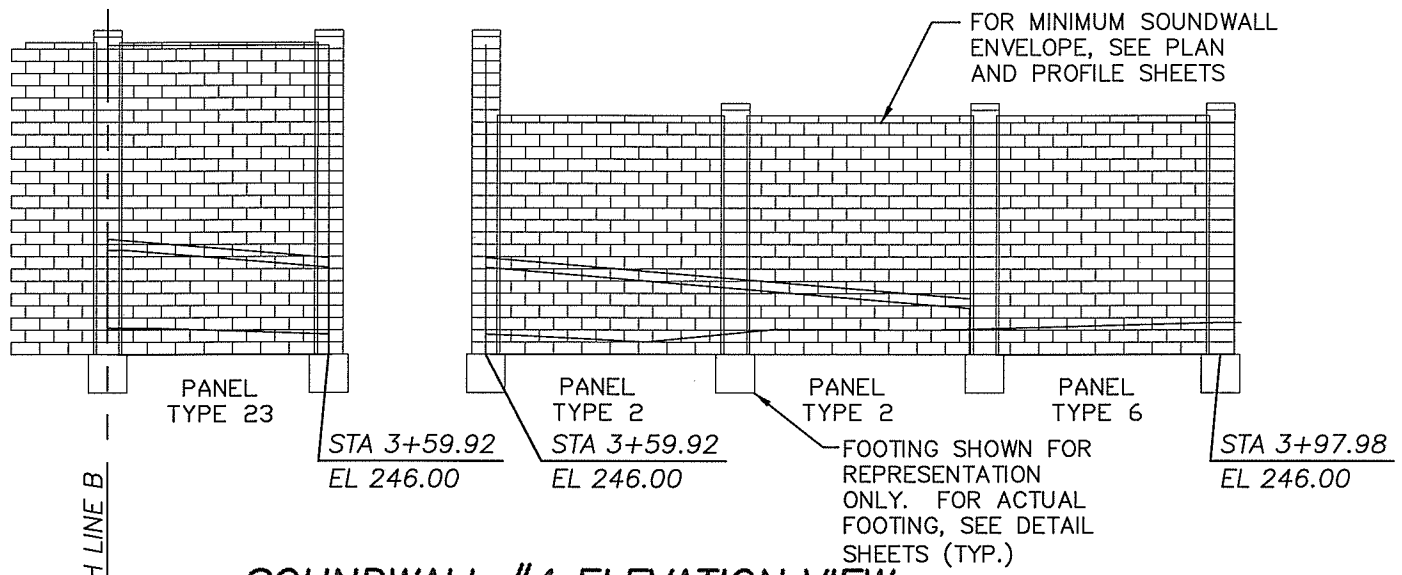

SOUNDWALL #4 ELEVATION VIEW
SECTION C

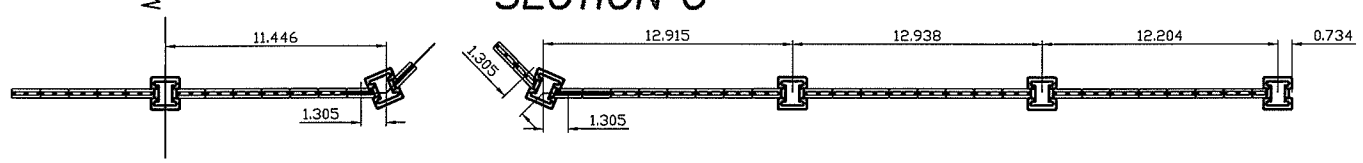

SOUNDWALL #4 PLAN VIEW
SECTION C

SOUNDWALL #4 KEYPLAN

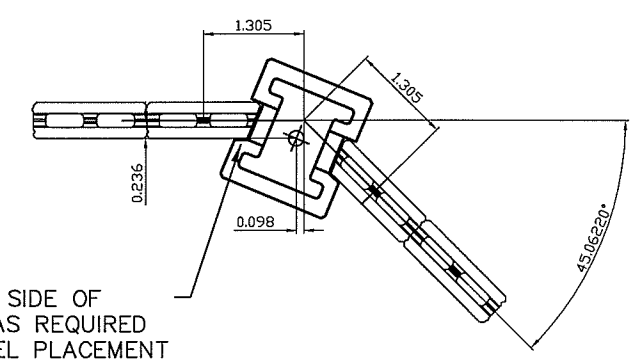

SAW CUT SIDE OF POCKET AS REQUIRED FOR PANEL PLACEMENT (TYP.)

A

CORNER POST DETAIL
NO SCALE

ALLAN BLOCK FENCE PANEL TYPE TABLE

PANEL TYPE	PANEL LENGTH, BLOCK	PANEL HEIGHT, BLOCK	POST REINFORCEMENT	BOND BEAM REINFORCEMENT	BOND BEAM REINFORCEMENT LOCATION, COURSE #
TYPE 2	8 PANEL BLOCK	19 PANEL BLOCK	4 - #6	1 - #4 EACH	1, 7, 13, 18
TYPE 6	7.5 PANEL BLOCK	19 PANEL BLOCK	4 - #6	1 - #4 EACH	1, 7, 13, 18
TYPE 7	7 PANEL BLOCK	17 PANEL BLOCK	4 - #6	1 - #4 EACH	1, 6, 11, 16
TYPE 19	7 PANEL BLOCK	19 PANEL BLOCK	4 - #6	1 - #4 EACH	1, 7, 13, 18
TYPE 22	6 PANEL BLOCK	17 PANEL BLOCK	4 - #6	1 - #4 EACH	1, 6, 11, 16
TYPE 23	7 PANEL BLOCK	25 PANEL BLOCK	4 - #6	1 - #4 EACH	1, 7, 13, 19, 24

DESIGNED Engineer
DRAWN Drawn
CRP 301422
HOR. 1"=10'-0"
VERT. 1"=10'-0"
DATE 10-22-03
DWG: B18
SHEET 18 OF 26

CALL 48 HOURS BEFORE YOU DIG
1-800-553-4344
"It's the Law"
NORTHWEST UTILITIES NOTIFICATION CENTER

DESIGN & ENGINEERING DIVISION

SOUNDWALL PLAN AND ELEVATIONS
SOUNDWALL #4

STATE OF WASHINGTON REGISTERED PROFESSIONAL ENGINEER
EXPIRES 10/29/__

CH2MHILL

CLARK COUNTY WASHINGTON

01-nov-2003 08:42:26
NDM:180257: ABWall 4.dwg

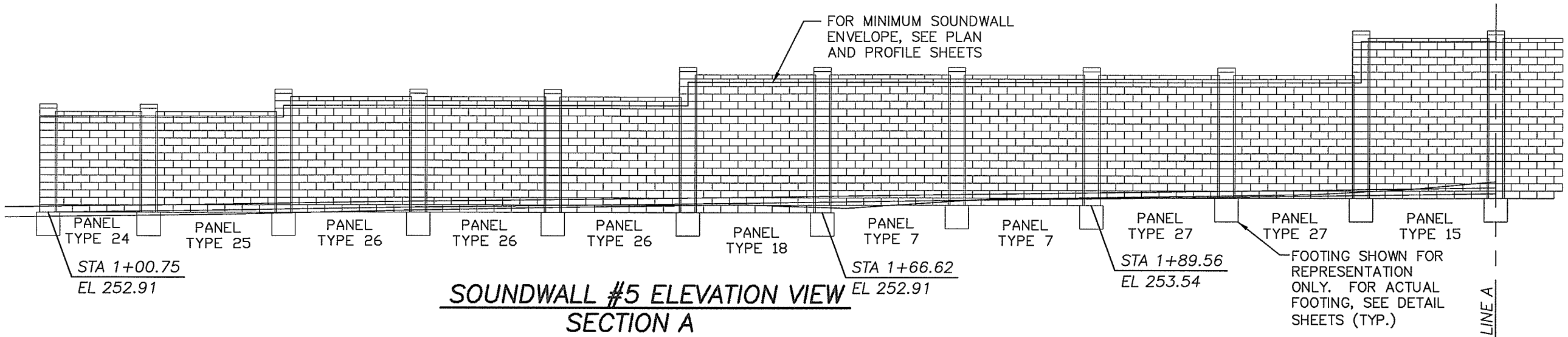

SOUNDWALL #5 ELEVATION VIEW
SECTION A

SOUNDWALL #5 PLAN VIEW
SECTION A

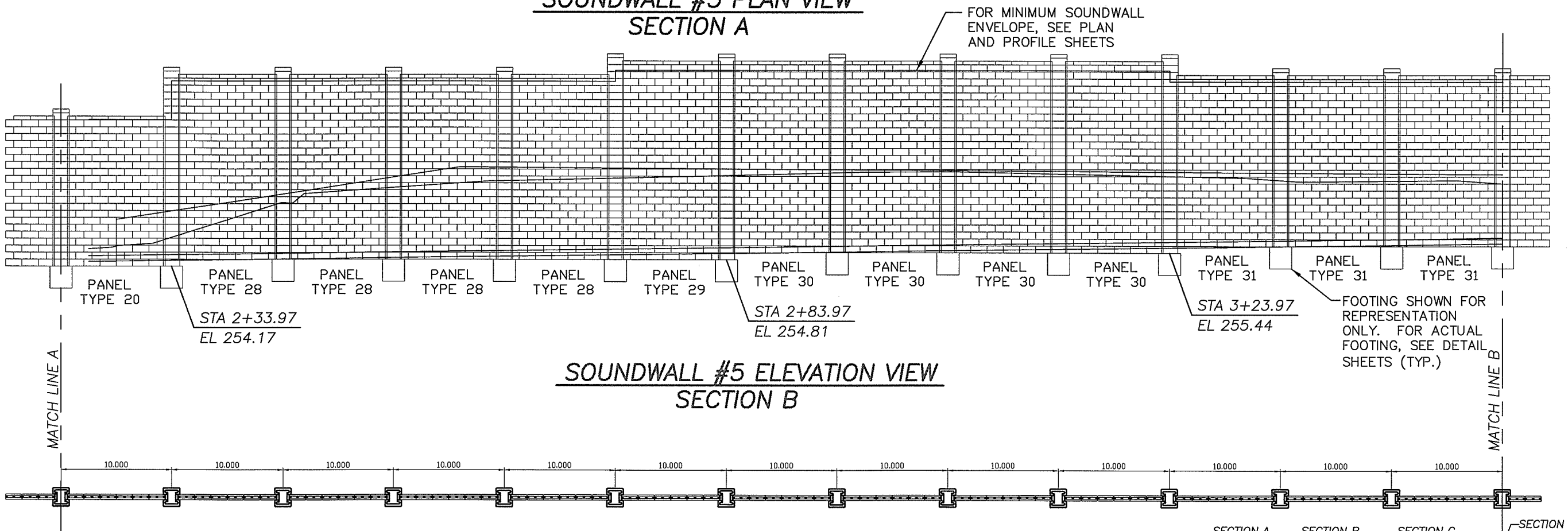

SOUNDWALL #5 ELEVATION VIEW
SECTION B

SOUNDWALL #5 PLAN VIEW
SECTION B

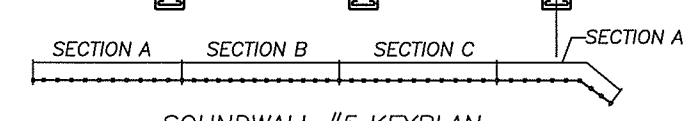

SOUNDWALL #5 KEYPLAN

DESIGNED Engineer
DRAWN Drawn
CRP 301422
HOR. 1"=10'-0"
VERT. 1"=10'-0"
DATE 10-22-03
DWG: B19
SHEET 19 OF 26

CALL 48 HOURS BEFORE YOU DIG
1-800-553-4344
"It's the Law"
NORTHWEST UTILITIES NOTIFICATION CENTER

DESIGN & ENGINEERING DIVISION

SOUNDWALL PLAN AND ELEVATIONS
SOUNDWALL #5

C. ERNEST NELSON
STATE OF WASHINGTON
13799
REGISTERED PROFESSIONAL ENGINEER
EXPIRES 10/29/__

CH2MHILL

CLARK COUNTY WASHINGTON

01-Nov-200308:42:26
NDM:180257: ABWall 5.dwg

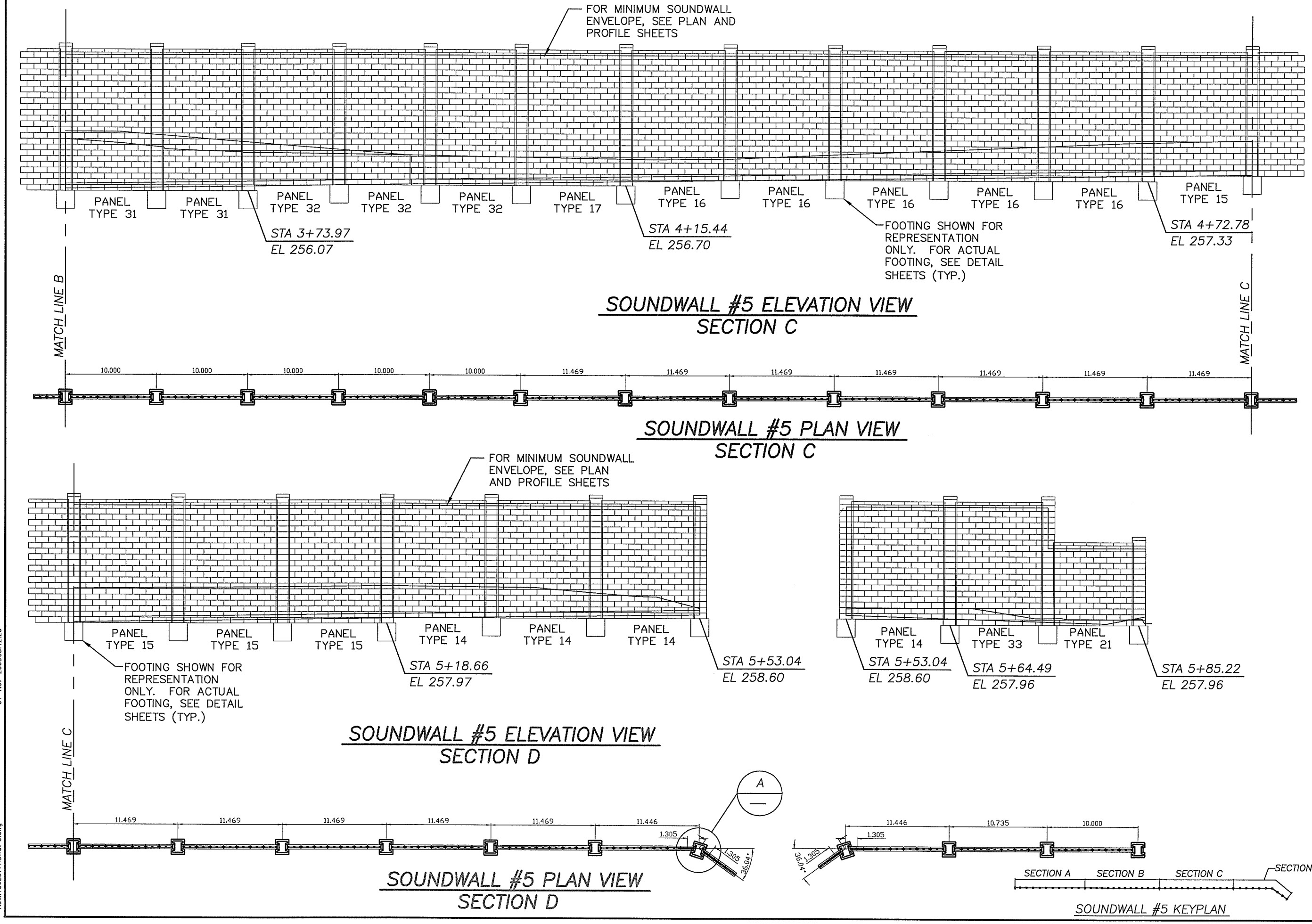

SOUNDWALL #5 ELEVATION VIEW
SECTION C

SOUNDWALL #5 PLAN VIEW
SECTION C

SOUNDWALL #5 ELEVATION VIEW
SECTION D

SOUNDWALL #5 PLAN VIEW
SECTION D

SOUNDWALL #5 KEYPLAN

DESIGNED Engineer
DRAWN Drawn
CRP 301422
HOR. 1"=10'-0"
VERT. 1"=10'-0"
DATE 10-22-03
DWG: B20
SHEET 20 OF 26

CALL 48 HOURS BEFORE YOU DIG
1-800-553-4344
"It's the Law"
NORTHWEST UTILITIES NOTIFICATION CENTER

DESIGN & ENGINEERING DIVISION

SOUNDWALL PLAN AND ELEVATIONS
SOUNDWALL #5

C. ERNEST NELSON
STATE OF WASHINGTON
13799
REGISTERED PROFESSIONAL ENGINEER
EXPIRES 10/29/__

CH2MHILL

CLARK COUNTY WASHINGTON

01-Nov-200308:42:26
NDM:180257: ABWall 5.dwg

ALLAN BLOCK FENCE PANEL TYPE TABLE

PANEL TYPE	PANEL LENGTH, BLOCK	PANEL HEIGHT, BLOCK	POST REINFORCEMENT	BOND BEAM REINFORCEMENT	BOND BEAM REINFORCEMENT LOCATION, COURSE #
TYPE 7	7 PANEL BLOCK	17 PANEL BLOCK	4 - #6	1 - #4 EACH	1, 6, 11, 16
TYPE 14	7 PANEL BLOCK	20 PANEL BLOCK	4 - #6	1 - #4 EACH	1, 7, 13, 19
TYPE 15	7 PANEL BLOCK	21 PANEL BLOCK	4 - #6	1 - #4 EACH	1, 8, 14, 20
TYPE 16	7 PANEL BLOCK	22 PANEL BLOCK	4 - #6	1 - #4 EACH	1, 8, 15, 21
TYPE 17	7 PANEL BLOCK	23 PANEL BLOCK	4 - #6	1 - #4 EACH	1, 8, 15, 22
TYPE 18	7 PANEL BLOCK	18 PANEL BLOCK	4 - #6	1 - #4 EACH	1, 7, 12, 17
TYPE 20	6 PANEL BLOCK	21 PANEL BLOCK	4 - #6	1 - #4 EACH	1, 8, 14, 20
TYPE 21	6 PANEL BLOCK	14 PANEL BLOCK	4 - #6	1 - #4 EACH	1, 7, 13
TYPE 24	5 PANEL BLOCK	13 PANEL BLOCK	4 - #6	1 - #4 EACH	1, 7, 12
TYPE 25	7 PANEL BLOCK	13 PANEL BLOCK	4 - #6	1 - #4 EACH	1, 7, 12
TYPE 26	7 PANEL BLOCK	15 PANEL BLOCK	4 - #6	1 - #4 EACH	1, 8, 14
TYPE 27	7 PANEL BLOCK	16 PANEL BLOCK	4 - #6	1 - #4 EACH	1, 8, 15
TYPE 28	6 PANEL BLOCK	26 PANEL BLOCK	4 - #6	1 - #4 EACH	1, 7, 13, 19, 25
TYPE 29	6 PANEL BLOCK	28 PANEL BLOCK	4 - #6	1 - #4 EACH	1, 8, 15, 21, 27
TYPE 30	6 PANEL BLOCK	27 PANEL BLOCK	4 - #6	1 - #4 EACH	1, 8, 14, 20, 26
TYPE 31	6 PANEL BLOCK	24 PANEL BLOCK	4 - #6	1 - #4 EACH	1, 7, 13, 18, 23
TYPE 32	6 PANEL BLOCK	23 PANEL BLOCK	4 - #6	1 - #4 EACH	1, 8, 15, 22
TYPE 33	6.5 PANEL BLOCK	21 PANEL BLOCK	4 - #6	1 - #4 EACH	1, 8, 14, 20

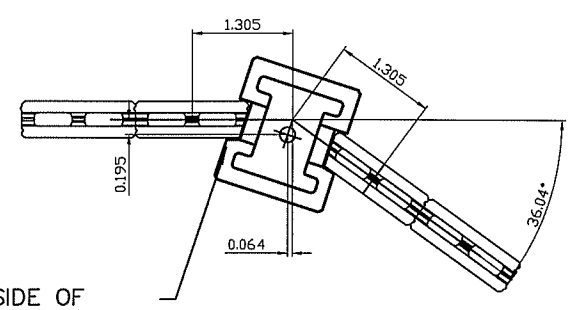

SAW CUT SIDE OF POCKET AS REQUIRED FOR PANEL PLACEMENT (TYP.)

A

CORNER POST DETAIL

NO SCALE

DESIGNED Engineer
DRAWN Drawn
CRP 301422
HOR. 1"=10'-0"
VERT. 1"=10'-0"
DATE 10-22-03
DWG: B21
SHEET 21 OF 26

CALL 48 HOURS BEFORE YOU DIG
1-800-553-4344
"It's the Law"
NORTHWEST UTILITIES NOTIFICATION CENTER

DESIGN & ENGINEERING DIVISION

SOUNDWALL PLAN AND ELEVATIONS
SOUNDWALL #5

C. ERNEST NELSON
STATE OF WASHINGTON
13799
REGISTERED PROFESSIONAL ENGINEER
EXPIRES 10/29/__

CH2MHILL

CLARK COUNTY WASHINGTON

01-Nov-200308:42:26

NDM:180257: ABWall 5.dwg

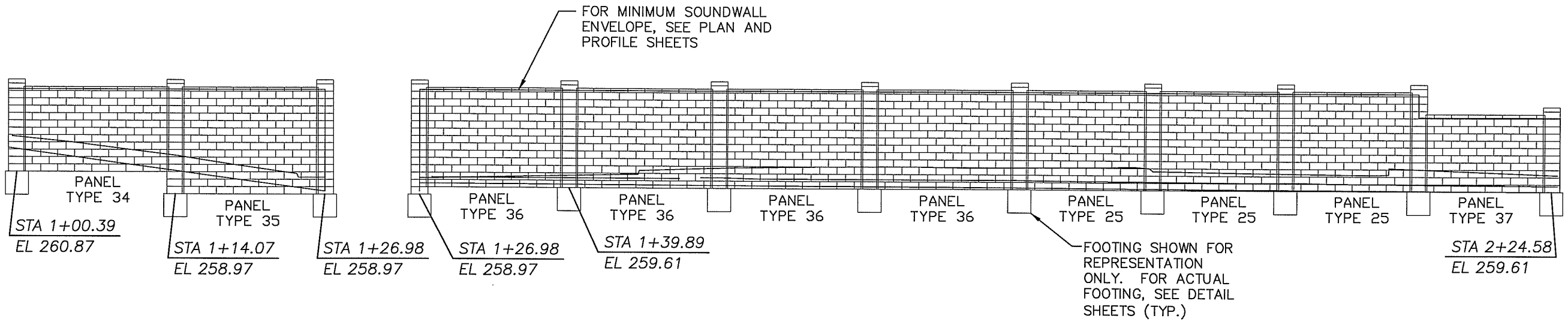

SOUNDWALL #6 ELEVATION VIEW

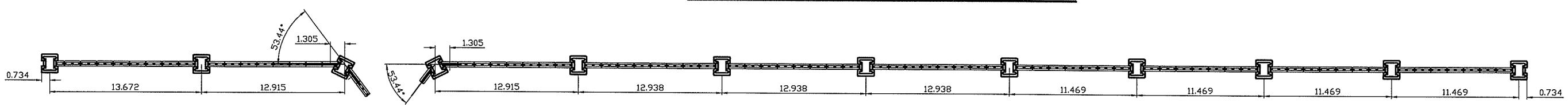

SOUNDWALL #6 PLAN VIEW

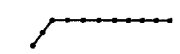

SOUNDWALL #6 KEYPLAN

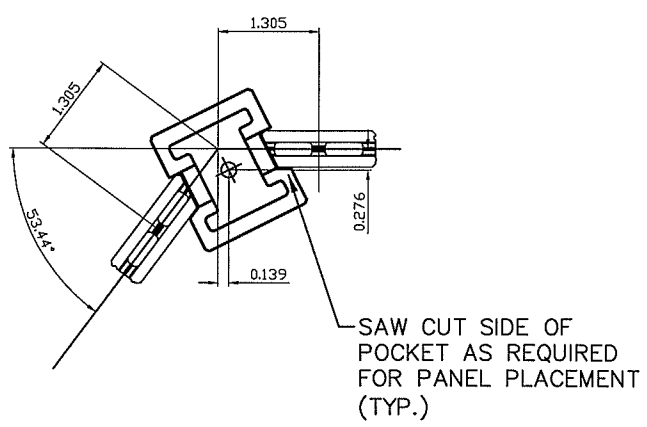

A

CORNER POST DETAIL

NO SCALE

ALLAN BLOCK FENCE PANEL TYPE TABLE

PANEL TYPE	PANEL LENGTH, BLOCK	PANEL HEIGHT, BLOCK	POST REINFORCEMENT	BOND BEAM REINFORCEMENT	BOND BEAM REINFORCEMENT LOCATION, COURSE #
TYPE 25	7 PANEL BLOCK	13 PANEL BLOCK	4 - #6	1 - #4 EACH	1, 7, 12
TYPE 34	8.5 PANEL BLOCK	11 PANEL BLOCK	4 - #6	1 - #4 EACH	1, 6, 10
TYPE 35	8 PANEL BLOCK	14 PANEL BLOCK	4 - #6	1 - #4 EACH	1, 7, 13
TYPE 36	8 PANEL BLOCK	13 PANEL BLOCK	4 - #6	1 - #4 EACH	1, 7, 12
TYPE 37	7 PANEL BLOCK	10 PANEL BLOCK	4 - #6	1 - #4 EACH	1, 5, 9

DESIGNED Engineer
DRAWN Drawn
CRP 301422
HOR. 1"=10'-0"
VERT. 1"=10'-0"
DATE 10-22-03
DWG: B22
SHEET 22 OF 26

CALL 48 HOURS BEFORE YOU DIG
1-800-553-4344
"It's the Law"
NORTHWEST UTILITIES NOTIFICATION CENTER

DESIGN & ENGINEERING DIVISION

SOUNDWALL PLAN AND ELEVATIONS
SOUNDWALL #6

C. ERNEST NELSON
STATE OF WASHINGTON
13799
REGISTERED PROFESSIONAL ENGINEER
EXPIRES 10/29/__

CH2MHILL

CLARK COUNTY WASHINGTON

01-Nov-200308:42:26

NDM:180257: ABWall 6.dwg

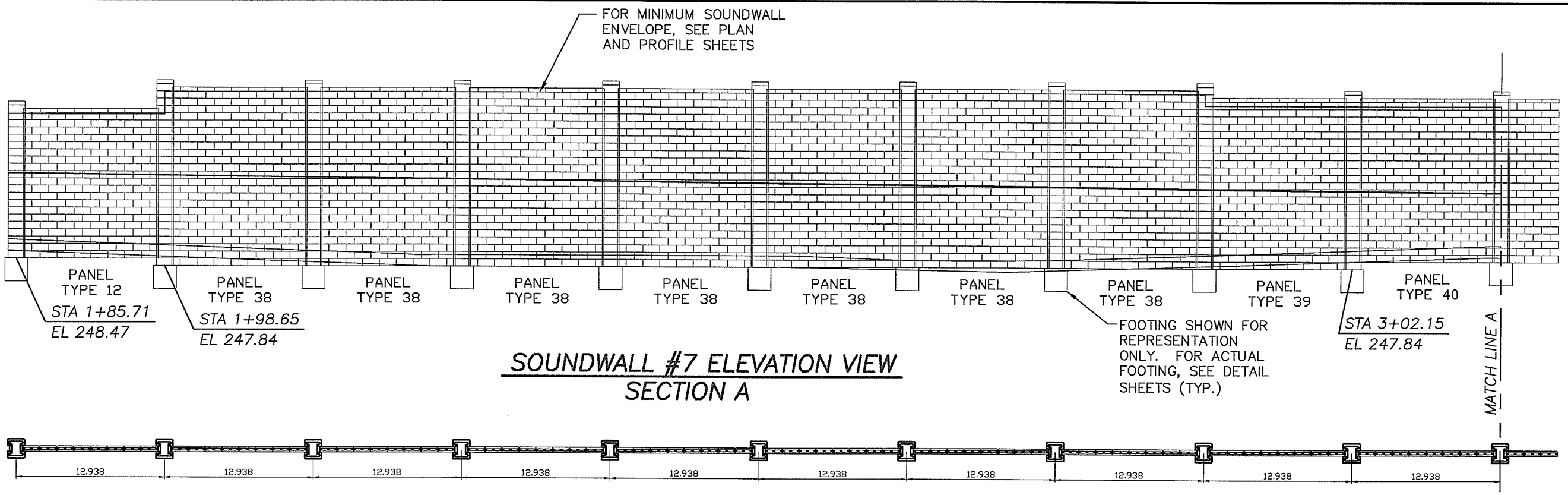

SOUNDWALL #7 ELEVATION VIEW
SECTION A

SOUNDWALL #7 PLAN VIEW
SECTION A

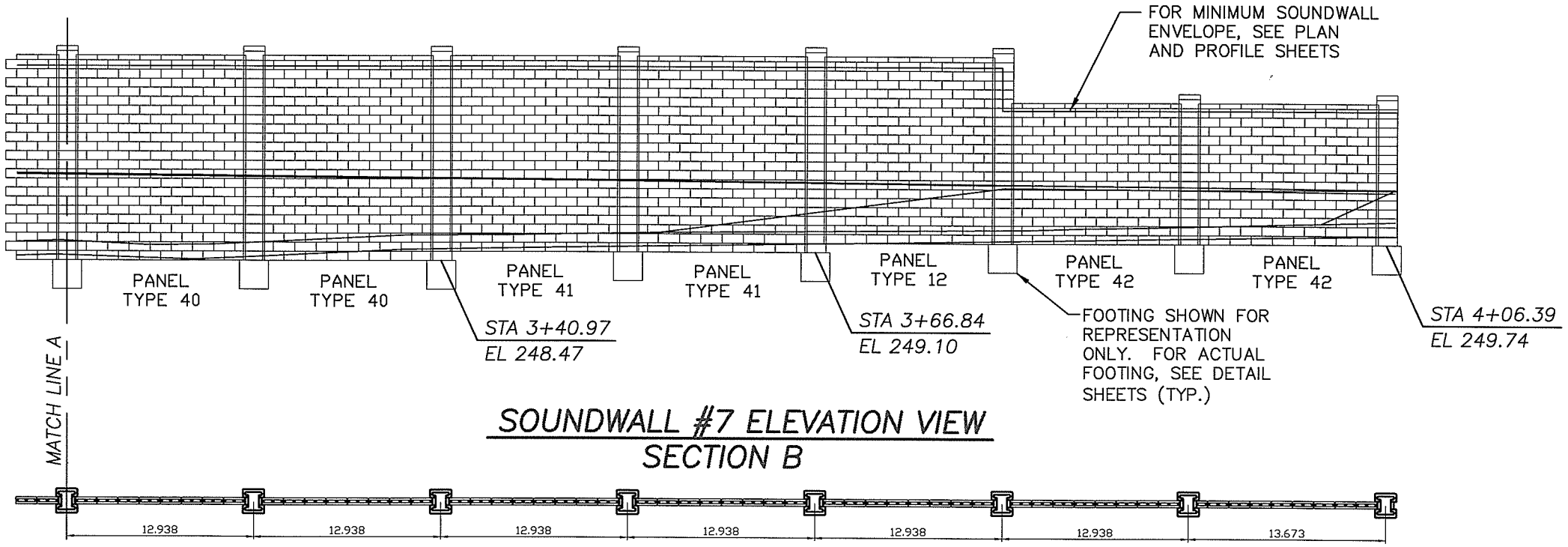

SOUNDWALL #7 ELEVATION VIEW
SECTION B

SOUNDWALL #7 PLAN VIEW
SECTION B

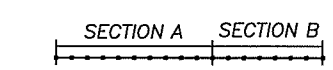

SOUNDWALL #7 KEYPLAN

DESIGNED Engineer
DRAWN Drawn
CRP 301422
HOR. 1"=10'-0"
VERT. 1"=10'-0"
DATE 10-22-03
DWG: B23
SHEET 23 OF 26

CALL 48 HOURS BEFORE YOU DIG
1-800-553-4344
"It's the Law"
NORTHWEST UTILITIES NOTIFICATION CENTER

DESIGN & ENGINEERING DIVISION

SOUNDWALL PLAN AND ELEVATIONS
SOUNDWALL #7

STATE OF WASHINGTON
ERNEST NELSON
REGISTERED PROFESSIONAL ENGINEER
EXPIRES 10/29/__

CH2MHILL

CLARK COUNTY WASHINGTON

01-Feb-2002 08:42:26

NDM:180257: ABWall 7.dwg

ALLAN BLOCK FENCE PANEL TYPE TABLE

PANEL TYPE	PANEL LENGTH, BLOCK	PANEL HEIGHT, BLOCK	POST REINFORCEMENT	BOND BEAM REINFORCEMENT	BOND BEAM REINFORCEMENT LOCATION, COURSE #
TYPE 12	8 PANEL BLOCK	20 PANEL BLOCK	4 - #6	1 - #4 EACH	1, 7, 13, 19
TYPE 38	8 PANEL BLOCK	24 PANEL BLOCK	4 - #6	1 - #4 EACH	1, 7, 13, 18, 23
TYPE 39	8 PANEL BLOCK	23 PANEL BLOCK	4 - #6	1 - #4 EACH	1, 8, 15, 22
TYPE 40	8 PANEL BLOCK	22 PANEL BLOCK	4 - #6	1 - #4 EACH	1, 8, 15, 21
TYPE 41	8 PANEL BLOCK	21 PANEL BLOCK	4 - #6	1 - #4 EACH	1, 8, 14, 20
TYPE 42	8 PANEL BLOCK	15 PANEL BLOCK	4 - #6	1 - #4 EACH	1, 8, 14
TYPE 43	8.5 PANEL BLOCK	15 PANEL BLOCK	4 - #6	1 - #4 EACH	1, 8, 14

DESIGNED Engineer
DRAWN Drawn
CRP 301422
HOR. 1"=10'-0"
VERT. 1"=10'-0"
DATE 10-22-03
DWG: B24
SHEET 24 OF 26

CALL 48 HOURS BEFORE YOU DIG
1-800-553-4344
"It's the Law"
NORTHWEST UTILITIES NOTIFICATION CENTER

DESIGN & ENGINEERING DIVISION

SOUNDWALL PLAN AND ELEVATIONS
SOUNDWALL #7

C. ERNEST NELSON
STATE OF WASHINGTON
13799
REGISTERED PROFESSIONAL ENGINEER
EXPIRES 10/29/__

CH2MHILL

CLARK COUNTY WASHINGTON

NDM:180257: ABWall 7.dwg 01-Nov-200308:42:26

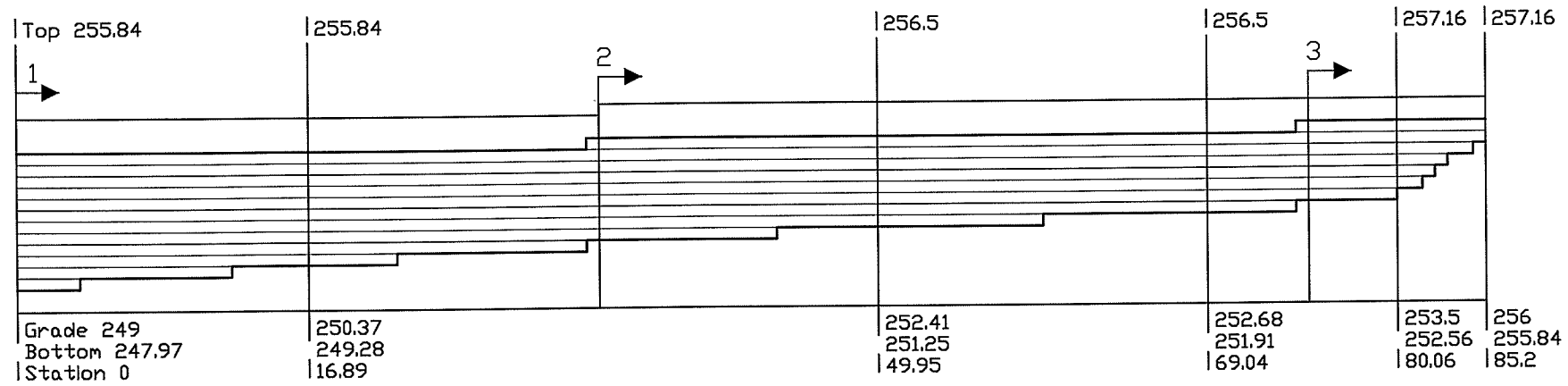

Section	1	2	3
Top	255.84	256.5	257.16
Grade	249	251.41	253.12
Bottom	247.97	250.59	252.56
Station	0	33.79	74.92

FRONT ELEVATION VIEW OF RETAINING WALL #7

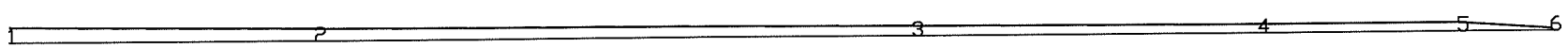

PLAN VIEW OF RETAINING WALL #7

FOR IDENTIFICATION ONLY

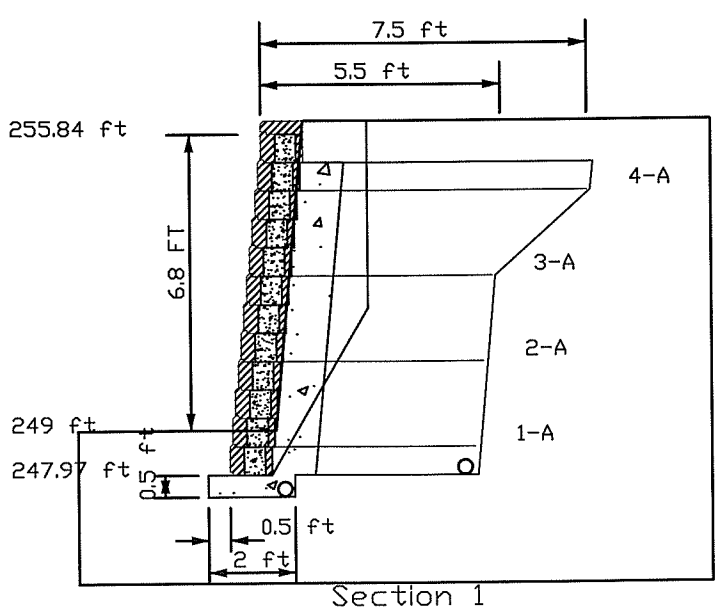

Section 1

NO SCALE

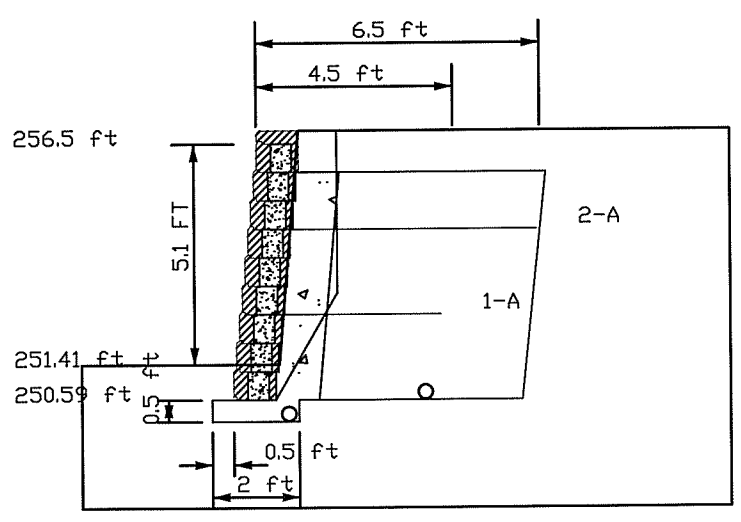

Section 2

NO SCALE

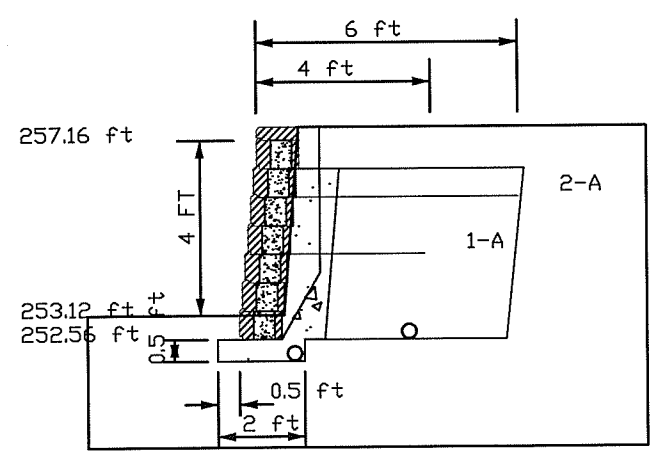

Section 3

NO SCALE

General Notes:

1- Retaining wall units and installation shall conform to the Allan Block Modular Retaining Wall Systems Specification Guidelines, Geogrid Reinforcement Systems Specification Guidelines, and Water Management Specification Guidelines as published in the AB Spec Book, ABENG.M4-00.

2- Hydrostatic loading is not considered in this analysis. Sufficient drainage must be provided such that hydrostatic loading (pore pressure) does not develop in the reinforced zone.

3- Analysis assumes fill placement in 8 inch lifts compacted to 90 % standard proctor. Compaction test frequency shall be determined by the engineer or as otherwise specified.

4- Seismic Coeficient of 0.36 was used for design.

5- Wall design utilizes the following strength parameters:

Infill Soil: Internal angle of friction = 30 degree
Soil unit Weight = 120 pcf
Retained Soil: Internal angle of friction = 30 degree
Soil unit Weight = 120 pcf
Foundation Soil: Internal angle of friction = 30 degree
Soil unit Weight = 120 pcf
Cohesion = 0 psf
Actual site soils must meet or exceed these parameters.

6- The retaining wall plan view is for identification only.

7- Staion 0+00 of Retianing Wall #7 matches Station 1+84.98 of Soundwall #7

8- Staion 0+85.2 of Retianing Wall #7 matches Station 0+99.78 of Soundwall #7

Surface Drainage Notes:

9- Rainfall and other water sources such as irrigation activities can be defined as surface water. The retaining wall design shall take into consideration the management of this water.

10- Site grading shall be designed to route surface water around and away from the wall.

11- The internal drainage system of the retaining wall is designed to remove incidental water that infiltrates into the soil behind the wall. Adequate storm water drainage systems are required to completely drain the area around the retaining wall structure.

12- Drain piping should be located at the back of the rock drain field behind the wall as close to the bottom of the wall as allowed while still maintaining a positive gradient for drainage to daylight, or to a storm water management system.

13- A heel drain may be required at back of the cut to route water away from the reinforced soil mass during the construction process.

14- Ground water can be present within the soil due to surface infiltration or water table fluctuation. If ground water is encountered during construction, an adequate drainage system must be installed or the wall design must consider the presence of water within the soil mass.

15- All water collection devices such as roof downspouts, storm sewers, and curb gutters must be designed to accommodate maximum flow rates and outlet outside the retaining wall area.

16- Retaining walls in conditions that allow standing water to overlap the wall face are considered water applications. These walls require specific design and construction steps to ensure performance.

DESIGNED AB/CEN
DRAWN AB/DLM
CRP 301422
HOR. 1"=10'-0"
VERT. 1"=10'-0"
DATE 10-31-03
DWG: B25
SHEET 25 OF 26

CALL 48 HOURS BEFORE YOU DIG
1-800-553-4344
"It's the Law"
NORTHWEST UTILITIES NOTIFICATION CENTER

DESIGN & ENGINEERING DIVISION

RETAINING WALL PLAN AND ELEVATION
SOUNDWALL #7

CERNEST NELSON
STATE OF WASHINGTON
13799
REGISTERED PROFESSIONAL ENGINEER
EXPIRES 10/29/__

CH2MHILL

CLARK COUNTY WASHINGTON

NDM:180257: AB Retaining Wall 7.dwg 10-31-03 08:42:26

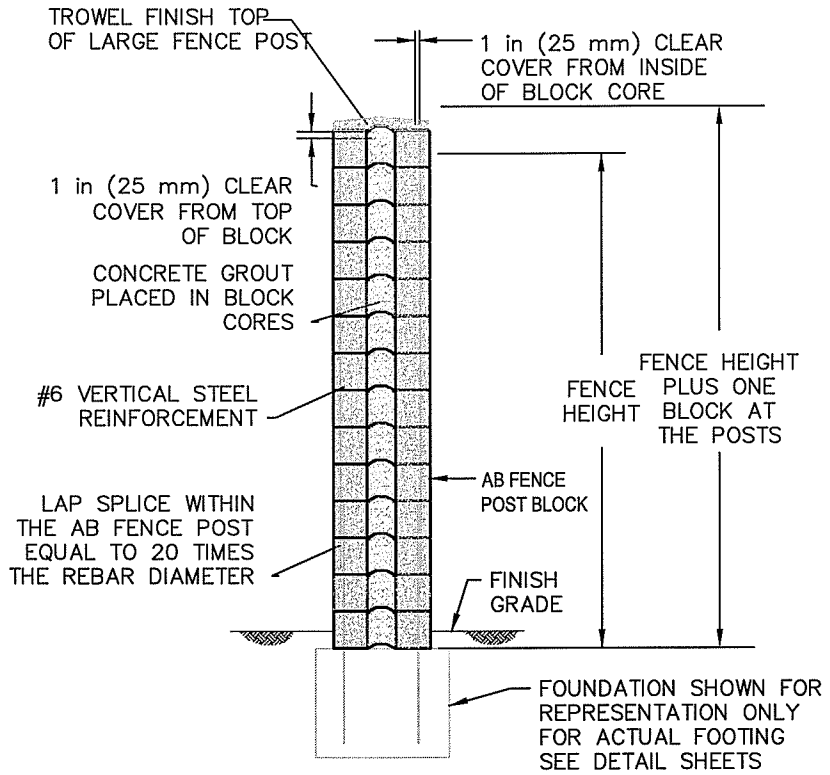

1.1 AB FENCE POST SECTION A

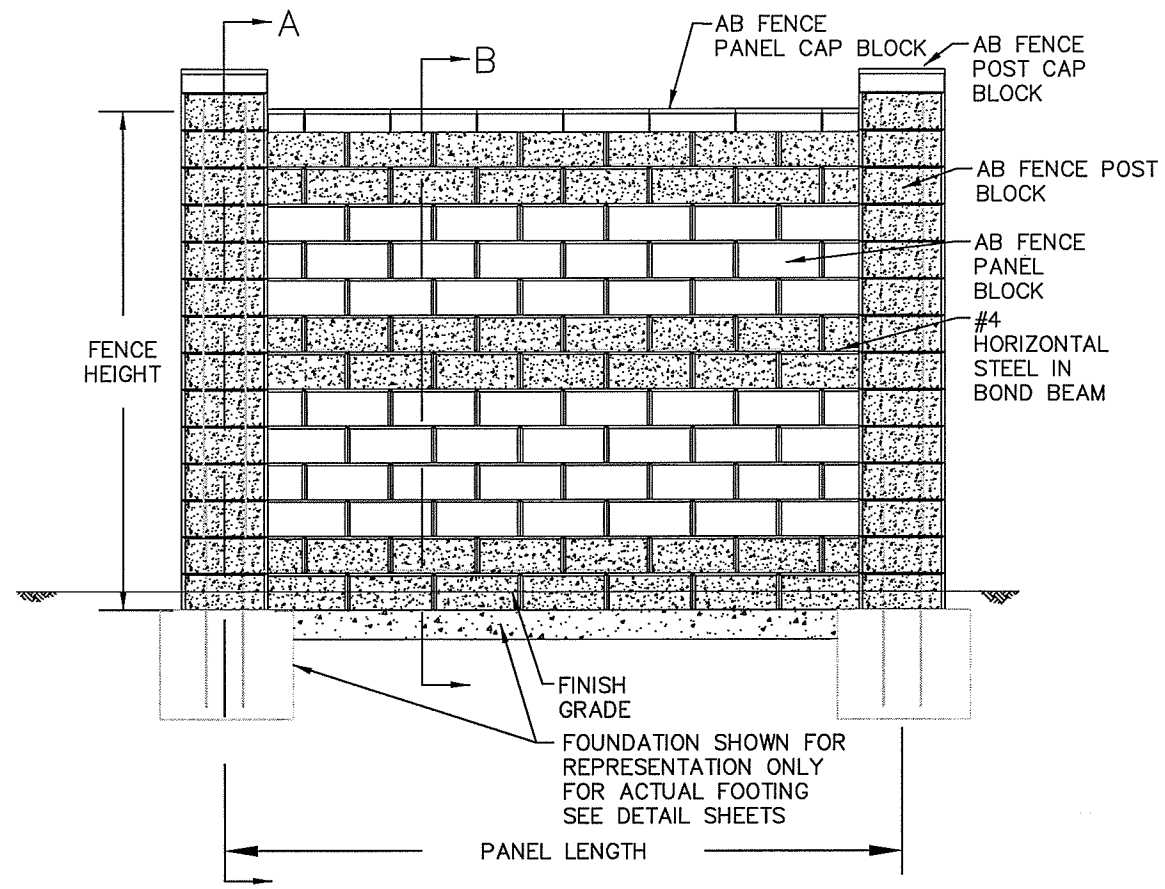

1.2 AB FENCE PANEL ELEVATION

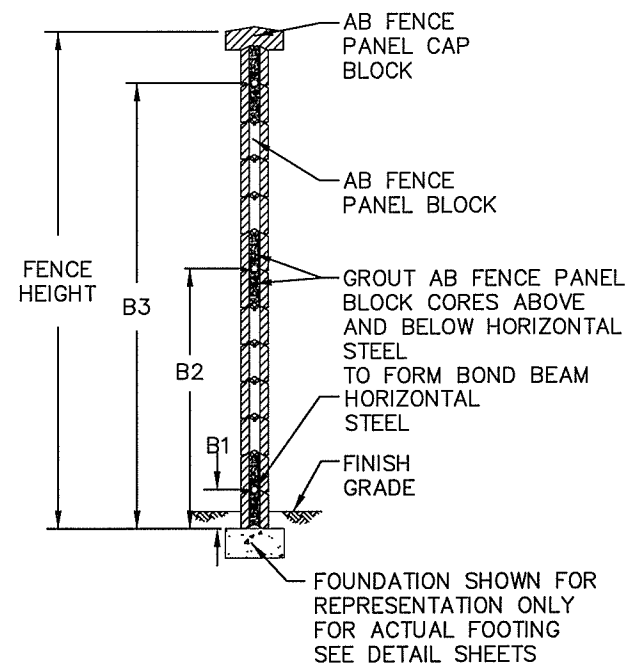

NOTE:
FOR ACTUAL BOND BEAM LOCATIONS SEE ALLAN BLOACK FENCE PANEL TYPE TABLE ON ELEVATION SHEETS

1.3 AB FENCE PANEL SECTION B

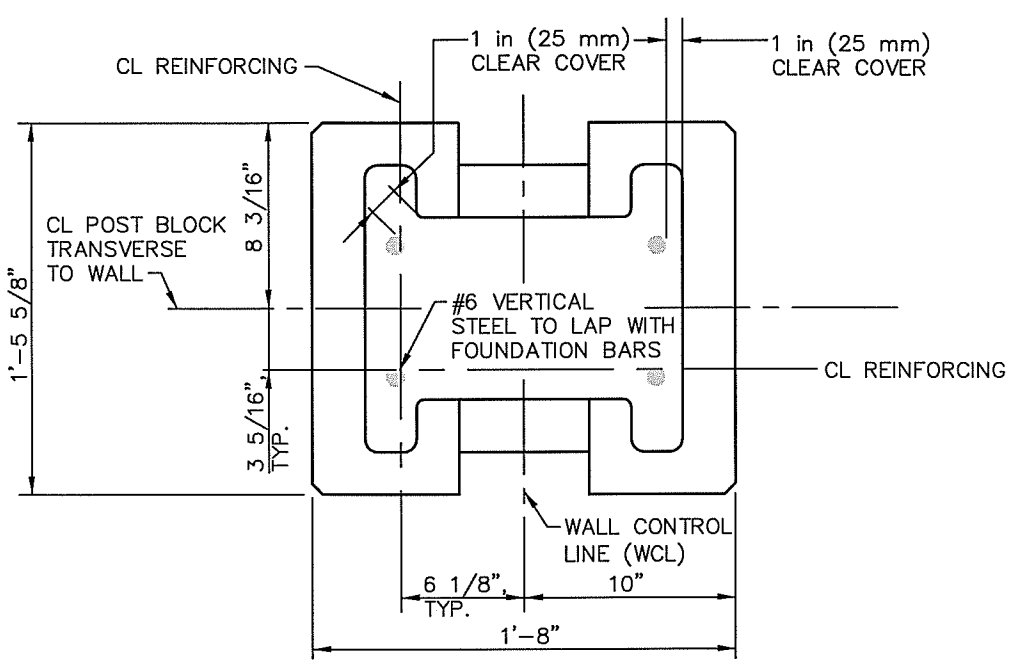

1.4 VERTICAL STEEL PLACEMENT

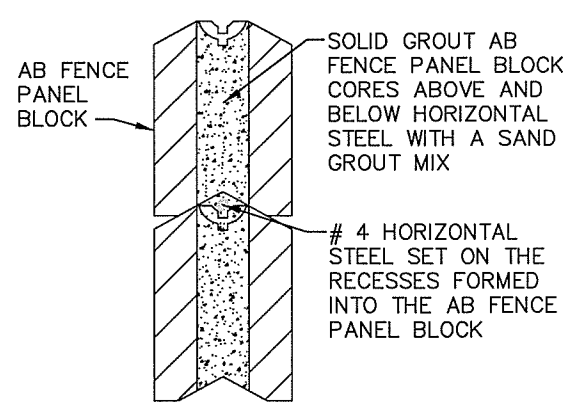

1.5 HORIZONTAL STEEL PLACEMENT

SOUND WALL GENERAL NOTES:

1. ALL CONSTRUCTION OF THE SOUND WALL SHALL BE IN ACCORDANCE WITH THE MANUFACTURER'S INSTALLATION GUIDE."

2. CONSTRUCTION INSPECTION SHALL INCLUDE BUT NOT BE LIMITED TO PILE EXCAVATION, CONCRETE POURING, REINFORCEMENT PLACING, GROUT PLACING AND AB FENCE BLOCK INSTALLATION.

3. SOUND WALL IS BASED ON THE FOLLOWING DESIGN CRITERIA FROM THE 1997 UNIFORM BUILDING CODE (UBC):
   a. WIND STAGNATION PRESSURE (qs) FOR FENCES UNDER 12 FEET, TABLE 16-F
      WIND SPEED OF 80 mph, qs = 12.3 psf
   b. COMBINDED HEIGHT, EXPOSURE AND GUST FACTOR COEFFICIENT (Ce), TABLE 16-G
      EXPOSURE B, Ce = 0.62
   c. PRESSURE COEFFICIENTS (Cq), TABLE 16-H
      STRUCTURE #7, Cq = 1.4
   d. OCCUPANCY CATEGORY WIND IMPORTANCE FACTOR (Iw), TABLE 16-K
      OCCUPANCY CATEGORY #4, Iw = 1.0
   e. SEISMIC ZONE FACTOR (Z) TABLE 16-I, Z = 0.3
   f SEISMIC COEFFICENT (Ca) TABLE 16-Q, Ca = 0.36

DESIGNED AB, CEN
DRAWN AB, DLM
CRP 301422
HOR. 1"=10'-0"
VERT. 1"=10'-0"
DATE 10-31-03
DWG: B26
SHEET 26 OF 26

CALL 48 HOURS BEFORE YOU DIG
1-800-553-4344
"It's the Law"
NORTHWEST UTILITIES NOTIFICATION CENTER

DESIGN & ENGINEERING DIVISION

SOUNDWALL DETAIL AND GENERAL NOTES

C. ERNEST NELSON
STATE OF WASHINGTON
13799
REGISTERED PROFESSIONAL ENGINEER
EXPIRES 10/29/__

CH2MHILL

CLARK COUNTY WASHINGTON

01-Feb-2002 08:42:26
NDM:180257: ABborder.mst

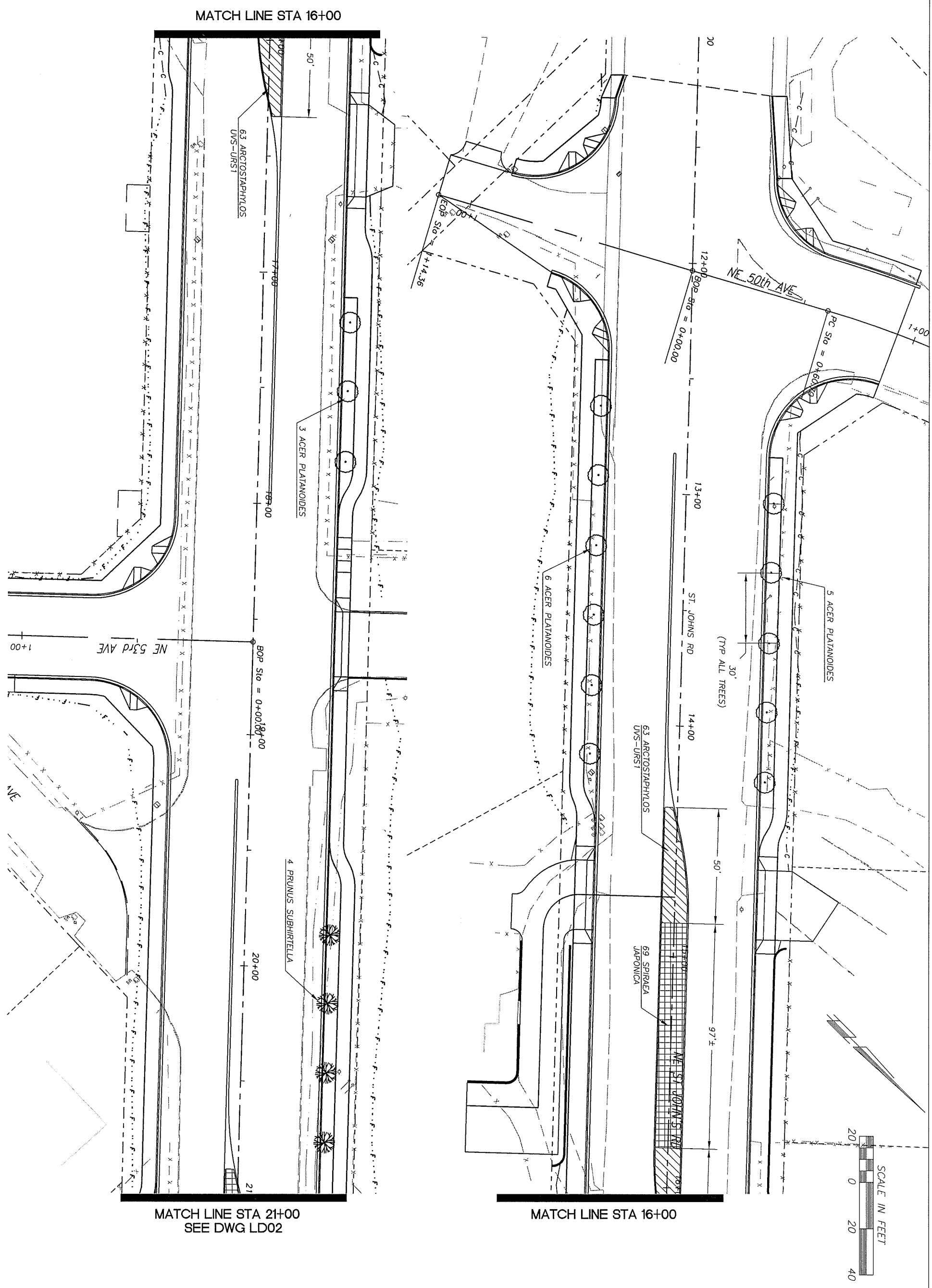

CLARK COUNTY WASHINGTON
proud past, promising future

DESIGN & ENGINEERING DIVISION
DESIGN SECTION

ST. JOHNS RD (NE 50TH TO NE 72ND)
LANDSCAPE PLAN (B.O.P. TO STA 21+00)

MICHAEL M. EMRICK
STATE OF WASHINGTON
29030
REGISTERED
PROFESSIONAL ENGINEER
EXPIRES: MAY 26, 2005

CALL 48 HOURS BEFORE YOU DIG
1-800-553-4344
"It's the Law"
NORTHWEST UTILITIES NOTIFICATION CENTER

DESIGNED	JC
DRAWN	BAK
CRP	301422
HOR.	1"=20'
VERT.	1"=5'
DATE	10/14/02
DWG:	LD01
SHEET	OF

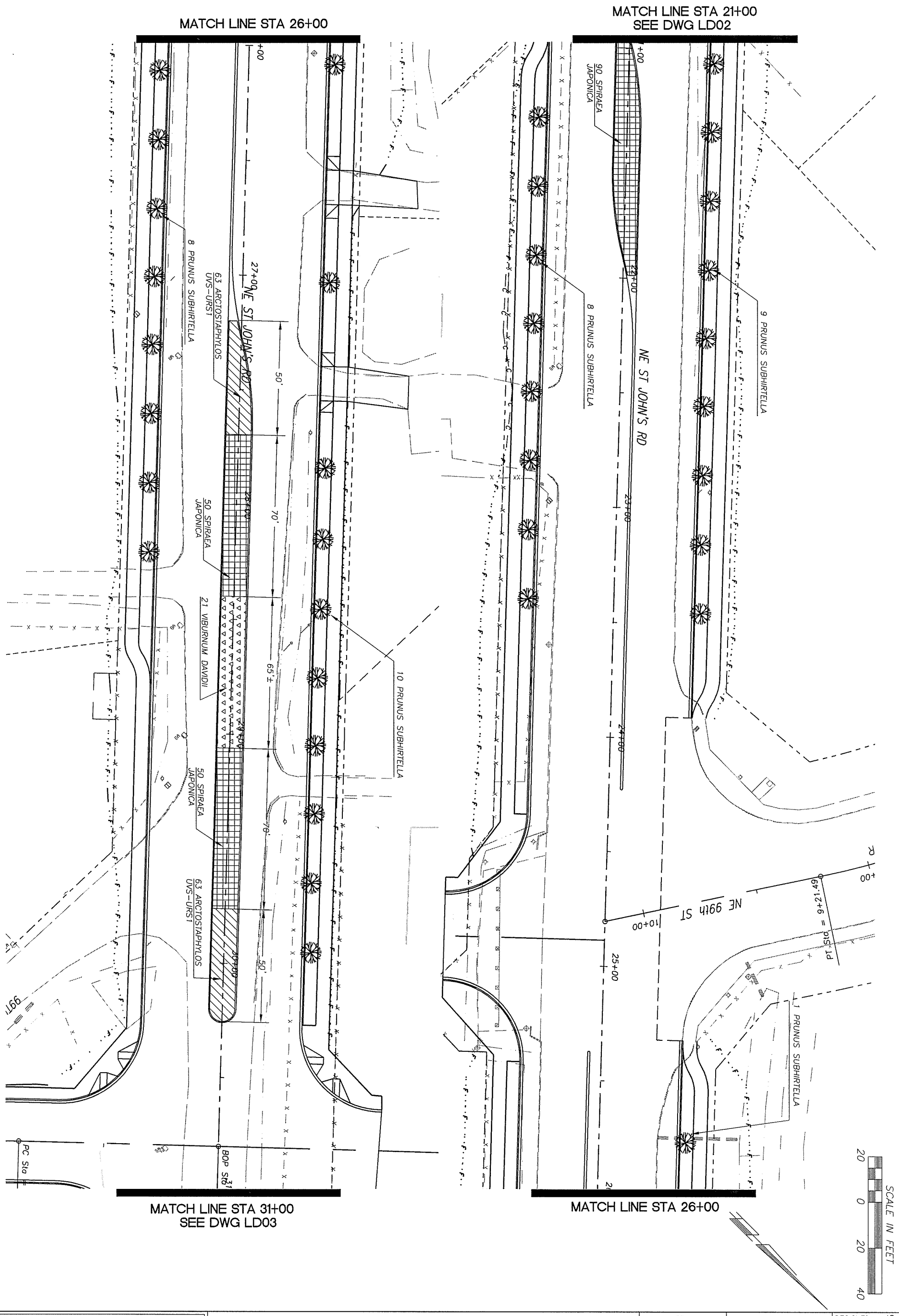

CLARK COUNTY
WASHINGTON
proud past, promising future

DESIGN & ENGINEERING DIVISION
DESIGN SECTION

ST. JOHNS RD (NE 50TH TO NE 72ND)
LANDSCAPE PLAN (STA 21+00 TO STA 31+00)

MICHAEL M. EMRICK
STATE OF WASHINGTON
29030
REGISTERED PROFESSIONAL ENGINEER
EXPIRES: MAY 26, 2005

CALL 48 HOURS BEFORE YOU DIG
1-800-553-4344
"It's the Law"
NORTHWEST UTILITIES NOTIFICATION CENTER

DESIGNED	JC
DRAWN	BAK
CRP	301422
HOR.	1"=20'
VERT.	1"=5'
DATE	10/14/02
DWG:	LD02
SHEET	OF

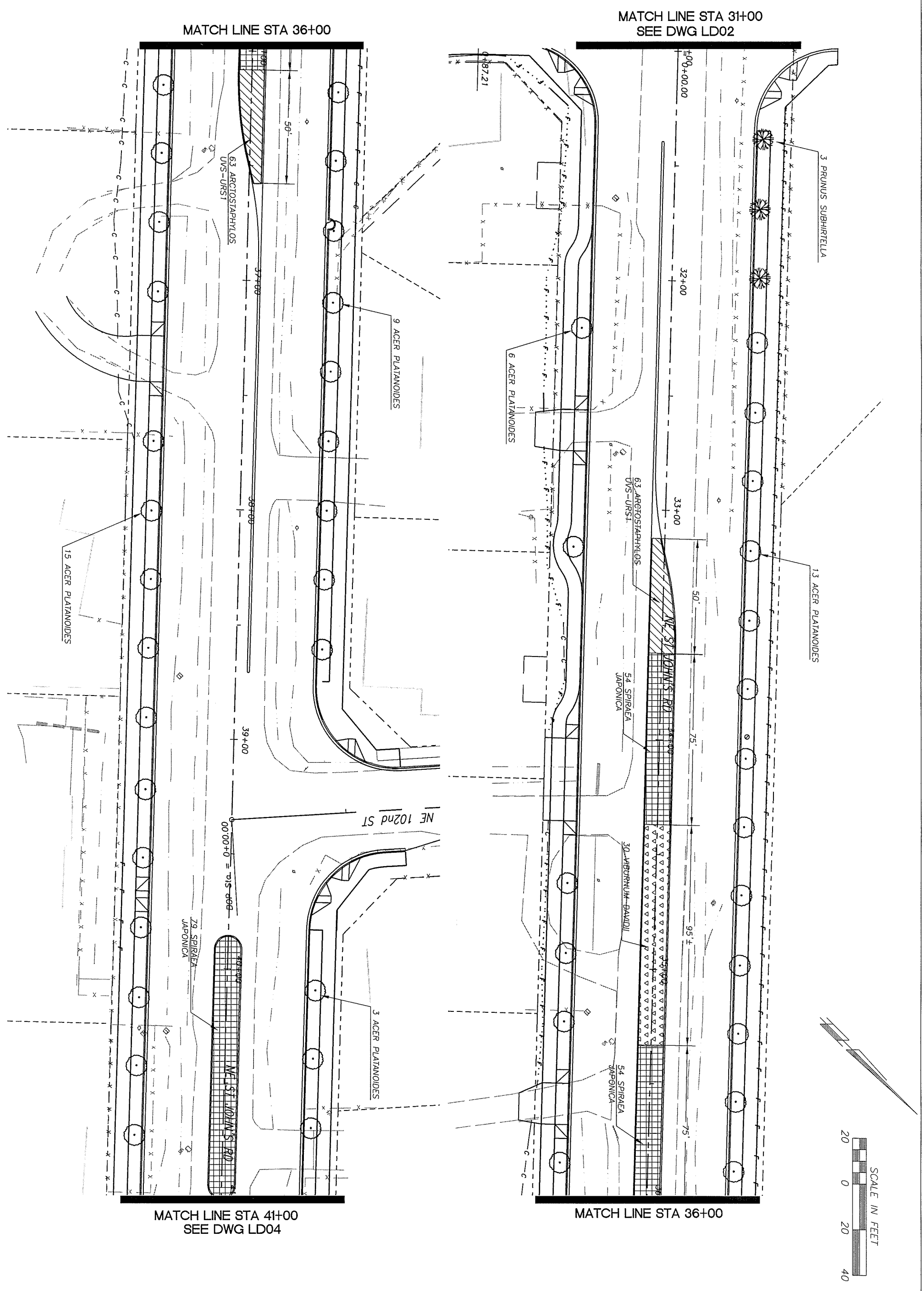

CLARK COUNTY WASHINGTON
proud past, promising future

DESIGN & ENGINEERING DIVISION
DESIGN SECTION

ST. JOHNS RD (NE 50TH TO NE 72ND)
LANDSCAPE PLAN (STA 31+00 TO STA 41+00)

MICHAEL M. EMRICK
STATE OF WASHINGTON
29030
REGISTERED
PROFESSIONAL ENGINEER
EXPIRES: MAY 26, 2005

CALL 48 HOURS BEFORE YOU DIG
1-800-553-4344
"It's the Law"
NORTHWEST UTILITIES NOTIFICATION CENTER

DESIGNED	JC
DRAWN	BAK
CRP	301422
HOR.	1"=20'
VERT.	1"=5'
DATE	10/14/02
DWG:	LD03
SHEET	OF

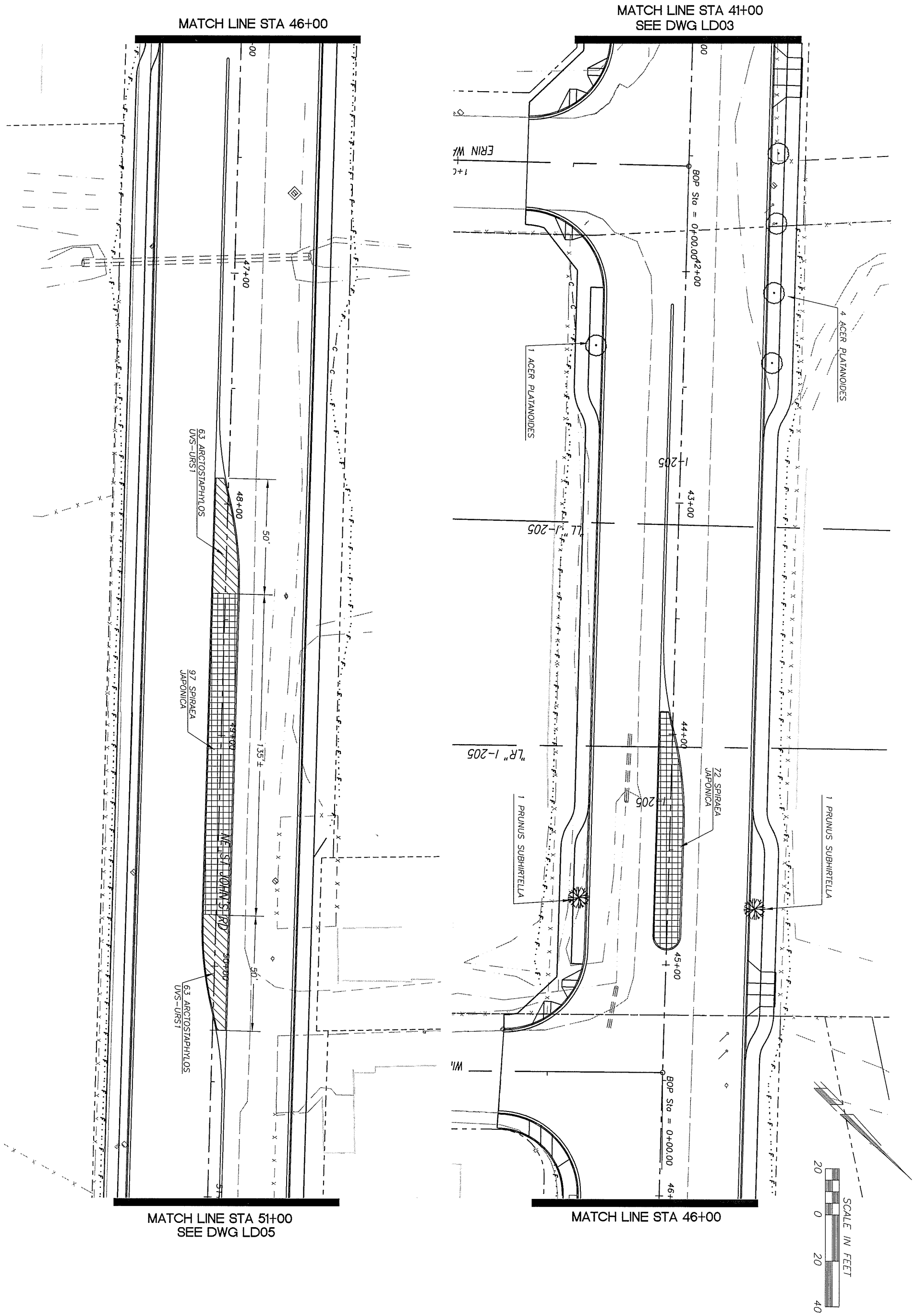

proud past, promising future

CLARK COUNTY
WASHINGTON

DESIGN & ENGINEERING DIVISION
DESIGN SECTION

ST. JOHNS RD (NE 50TH TO NE 72ND)
LANDSCAPE PLAN (STA 41+00 TO STA 51+00)

MICHAEL M. ENRICK
STATE OF WASHINGTON
29030
REGISTERED
PROFESSIONAL ENGINEER
EXPIRES: MAY 26, 2005

CALL 48 HOURS BEFORE YOU DIG
1-800-553-4344
"It's the Law"
NORTHWEST UTILITIES NOTIFICATION CENTER

DESIGNED	JC
DRAWN	BAK
CRP	301422
HOR.	1"=20'
VERT.	1"=5'
DATE	10/14/02
DWG:	LD04
SHEET	OF

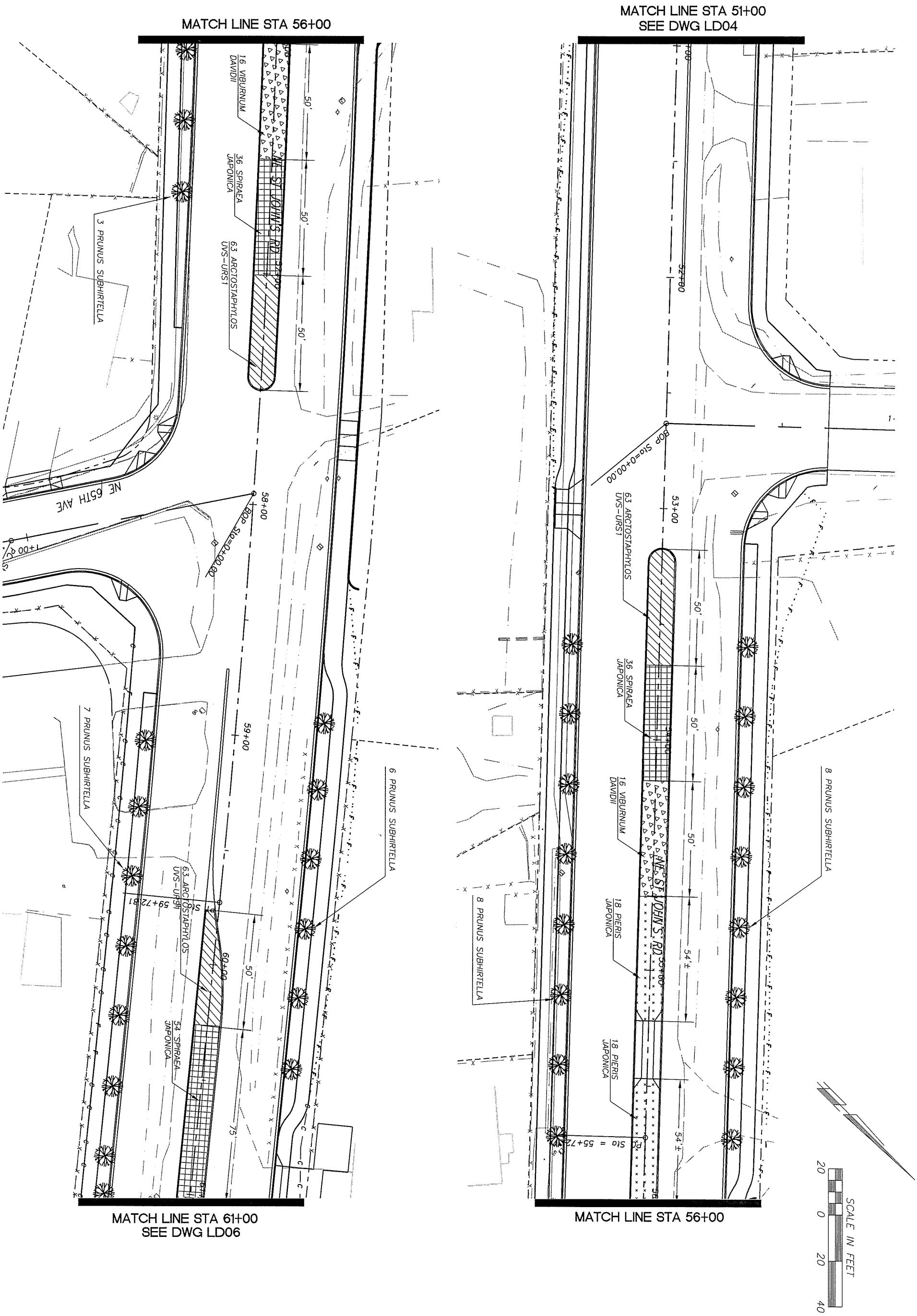

proud past, promising future

CLARK COUNTY
WASHINGTON

DESIGN & ENGINEERING DIVISION
DESIGN SECTION

ST. JOHNS RD (NE 50TH TO NE 72ND)
LANDSCAPE PLAN (STA 51+00 TO STA 61+00)

MICHAEL M. ENRICK
STATE OF WASHINGTON
29030
REGISTERED
PROFESSIONAL ENGINEER
EXPIRES: MAY 26, 2005

CALL 48 HOURS BEFORE YOU DIG
1-800-553-4344
"It's the Law"
NORTHWEST UTILITIES NOTIFICATION CENTER

DESIGNED	JC
DRAWN	BAK
CRP	301422
HOR.	1"=20'
VERT.	1"=5'
DATE	10/14/02
DWG:	LD05
SHEET	OF

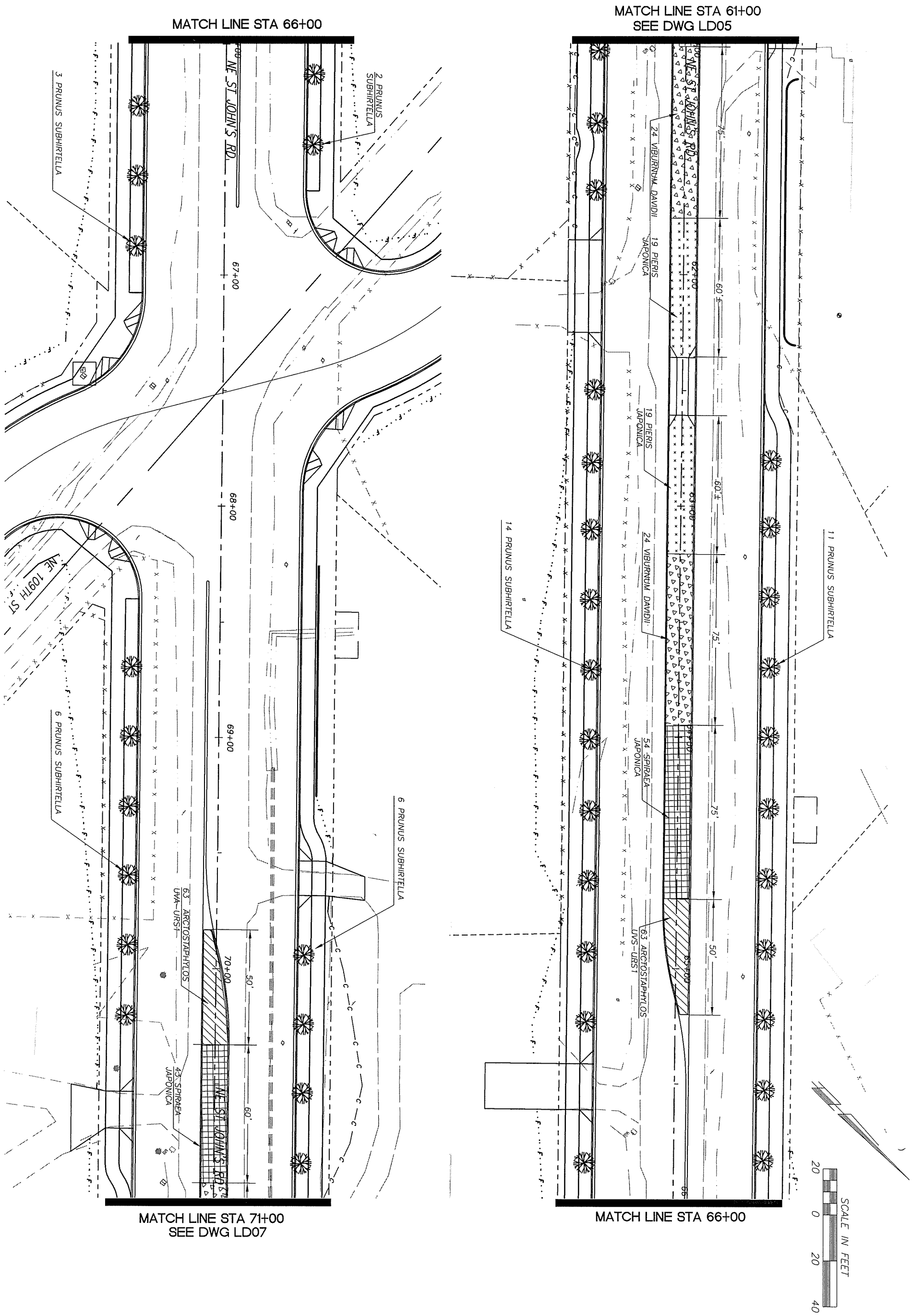

proud past, promising future

CLARK COUNTY
WASHINGTON

DESIGN & ENGINEERING DIVISION
DESIGN SECTION

ST. JOHNS RD (NE 50TH TO NE 72ND)
LANDSCAPE PLAN (STA 61+00 TO STA 71+00)

MICHAEL M. EMRICK
STATE OF WASHINGTON
29030
REGISTERED
PROFESSIONAL ENGINEER
EXPIRES: MAY 26, 2005

CALL 48 HOURS BEFORE YOU DIG
1-800-553-4344
"It's the Law"
NORTHWEST UTILITIES NOTIFICATION CENTER

DESIGNED	JC
DRAWN	BAK
CRP	301422
HOR.	1"=20'
VERT.	1"=5'
DATE	10/14/02
DWG:	LD06
SHEET	OF

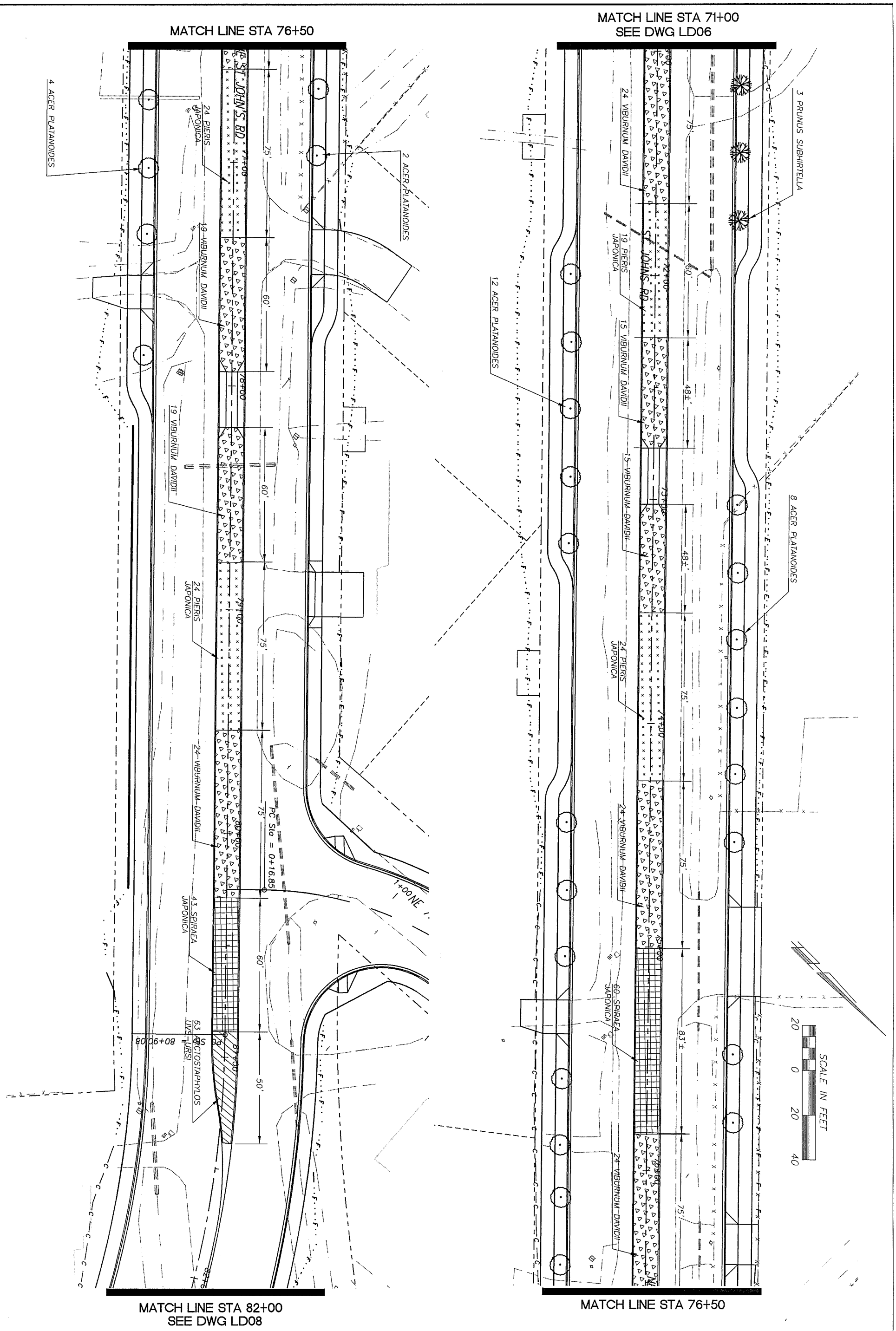

proud past, promising future

CLARK COUNTY
WASHINGTON

DESIGN & ENGINEERING DIVISION
DESIGN SECTION

ST. JOHNS RD (NE 50TH TO NE 72ND)
LANDSCAPE PLAN (STA 71+00 TO STA 81+00)

MICHAEL M. EMRICK
STATE OF WASHINGTON
29030
REGISTERED
PROFESSIONAL ENGINEER
EXPIRES: MAY 26, 2005

CALL 48 HOURS BEFORE YOU DIG
1-800-553-4344
"It's the Law"
NORTHWEST UTILITIES NOTIFICATION CENTER

DESIGNED	JC
DRAWN	BAK
CRP	301422
HOR.	1"=20'
VERT.	1"=5'
DATE	10/14/02
DWG:	LD07
SHEET	OF

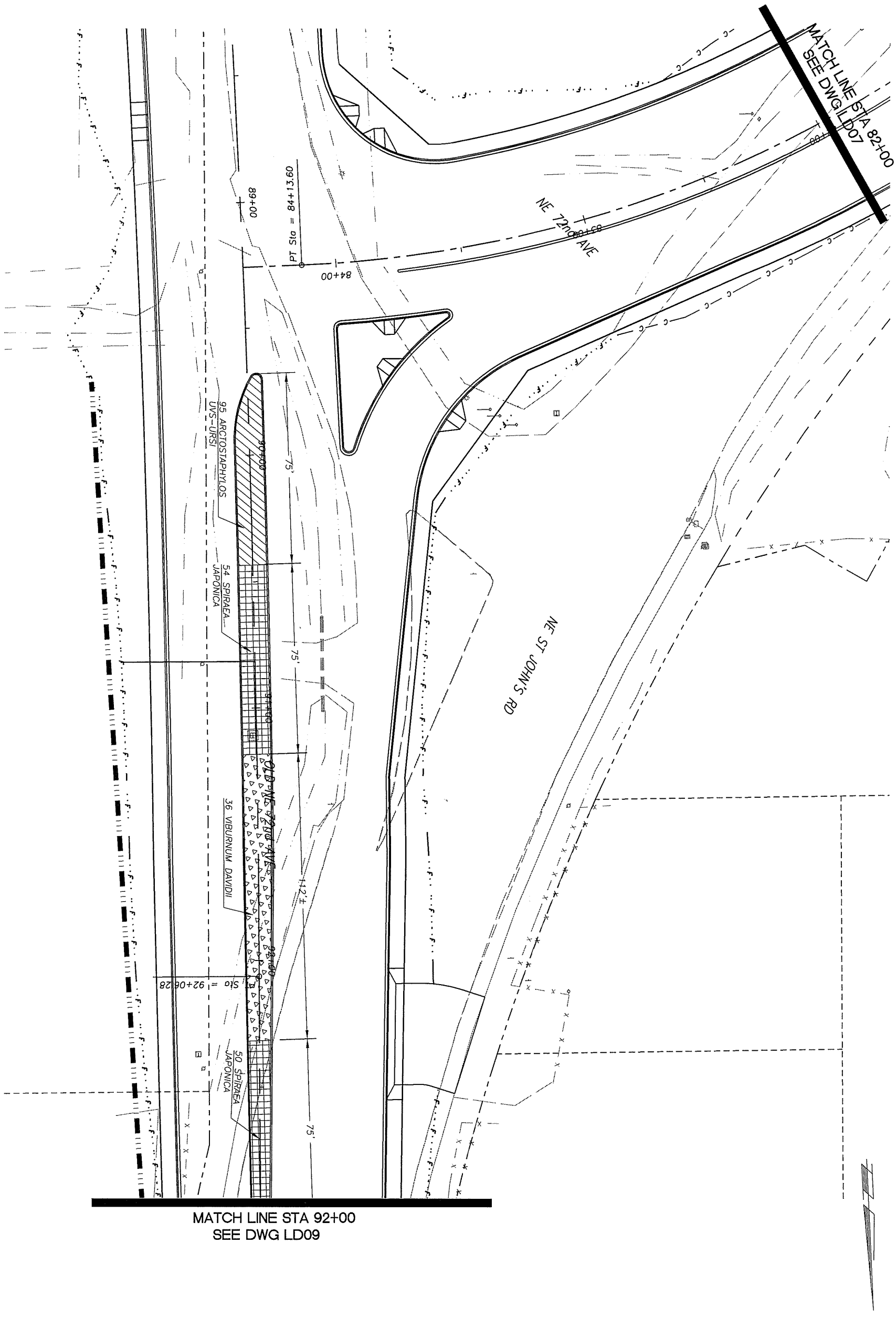

proud past, promising future

CLARK COUNTY
WASHINGTON

DESIGN & ENGINEERING DIVISION
DESIGN SECTION

ST. JOHNS RD (NE 50TH TO NE 72ND)
LANDSCAPE PLAN (STA 81+00 TO STA 91+00)

MICHAEL M. EMRICK
STATE OF WASHINGTON
29030
REGISTERED PROFESSIONAL ENGINEER
EXPIRES: MAY 26, 2005

CALL 48 HOURS BEFORE YOU DIG
1-800-553-4344
"It's the Law"
NORTHWEST UTILITIES NOTIFICATION CENTER

DESIGNED	JC
DRAWN	BAK
CRP	301422
HOR.	1"=20'
VERT.	1"=5'
DATE	10/14/02
DWG:	LD08
SHEET	OF

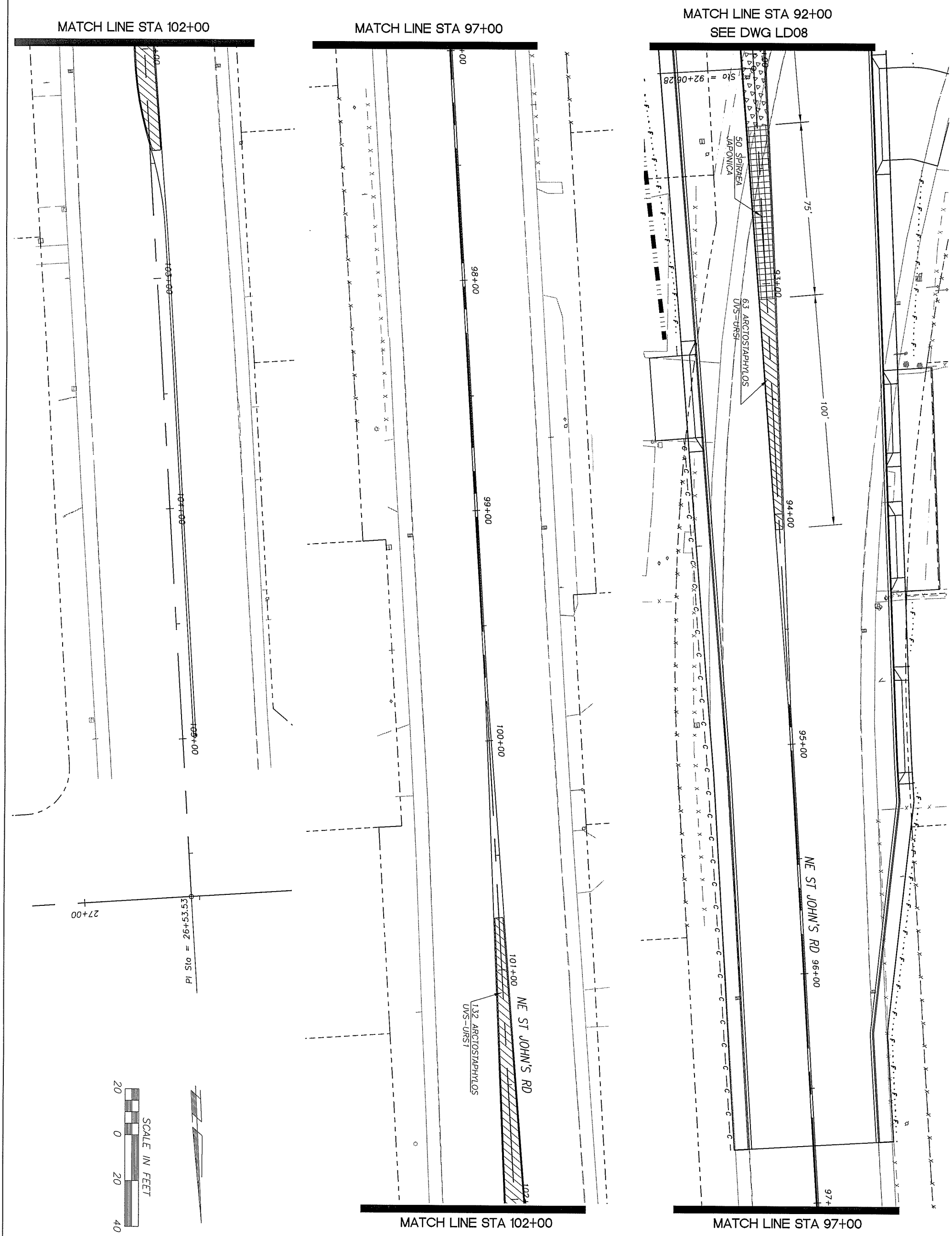

MATCH LINE STA 102+00

MATCH LINE STA 97+00

proud past, promising future

CLARK COUNTY
WASHINGTON

DESIGN & ENGINEERING DIVISION
DESIGN SECTION

ST. JOHNS RD (NE 50TH TO NE 72ND)
LANDSCAPE PLAN (STA 91+00 TO E.O.P.)

MICHAEL M. EMRICK
STATE OF WASHINGTON
26030
REGISTERED
PROFESSIONAL ENGINEER
EXPIRES: MAY 26, 2005

CALL 48 HOURS BEFORE YOU DIG
1-800-553-4344
"It's the Law"
NORTHWEST UTILITIES NOTIFICATION CENTER

DESIGNED	JC
DRAWN	BAK
CRP	301422
HOR.	1"=20'
VERT.	1"=5'
DATE	10/14/02
DWG:	LD09
SHEET	OF

PLANT TABLE

TYPE	BOTANICAL NAME/COMMON NAME	QUANTITY	SIZE	CONDITION	SPACING
TREES:					
	ACER PLATANOIDES 'CRIMSON SENTRY' / CRIMSON SENTRY NORWAY MAPLE	79	1 3/4" CAL.	B & B	30'
	PRUNUS SUBHIRTELLA / AUTUMN FLOWERING CHERRY	95	1 3/4" CAL.	B & B	30'
SHRUBS:					
	SPIRAEA JAPONICA 'GOLDFLAME' / GOLDFLAME SPIRAEA	1054	1 GALLON	CONTAINER	2' O.C.
	PIERIS JAPONICA / FOREST FLAME	147	1 GALLON	CONTAINER	3' O.C.
	VIBURNUM DAVIDII / DAVID VIBURNUM	307	2 GALLON	CONTAINER	3' O.C.
GROUND COVER:					
	ARCTOSTAPHYLOS UVA-URSI / KINNIKINNICK	1172	4" POT	CONTAINER	18" O.C.

PLANTING NOTES

1. CONTRACTOR SHALL VERIFY ALL QUANTITIES, MEASUREMENTS, AND SITE CONDITIONS.
2. PLANTING PERIOD IS FROM APPROXIMATELY OCTOBER 15 TO APRIL 15, WEATHER DEPENDENT.
3. CONTRACTOR SHALL VERIFY THE LOCATION OF ALL EXISTING UTILITIES.
4. INSTALLED PLANTS SHALL BE IMMEDIATELY WATERED IN BY CONTRACTOR.
5. ALL PLANT MATERIALS SHALL CONFORM IN SIZE AND GRADE TO THE "AMERICAN STANDARD FOR NURSERY STOCK", CURRENT EDITION.
6. PLANTS SHALL BE INSTALLED ACCORDING TO DETAILS SHOWN.
7. NO SUBSTITUTIONS IN PLANT VARIETIES SHALL BE MADE WITHOUT APPROVAL FROM CLARK COUNTY PARKS MAINTENANCE.
8. LANDSCAPE WORK SHALL BE REVIEWED AND APPROVED BY CLARK COUNTY PARKS MAINTENANCE. SOME FIELD ADJUSTMENT MAY BE NECESSARY TO REFLECT ACTUAL GRADING AND SITE CONDITIONS.
9. FOLLOWING PLANT INSTALLATION, 4 INCHES OF APPROVED BARK MULCH SHALL BE PLACED AROUND EACH PLANTING, THROUGHOUT THE PLANTING STRIPS, WITH SPECIAL CARE TO NOT BURY THE PLANTINGS.
10. FOLLOWING PLANTING, TREES SHALL BE STAKED ACCORDING TO DETAIL SHOWN.
11. FOLLOWING COMPLETION OF LANDSCAPE PROJECT, SITE SHALL BE MAINTAINED WEEKLY. MAINTENANCE SHALL INCLUDE: ADEQUATE WATERING OF ALL INSTALLED PLANTINGS TO ENSURE HEALTH AND SURVIVAL, REMOVING WEEDS, MONITOR TREE STAKES AND TIES TO ENSURE PROPER SUPPORT AND TO PREVENT TIES FROM GIRDLING TRUNKS. REMOVE TREE STAKES AND TIES AFTER ONE YEAR MINIMUM, OR AS NEEDED UNTIL ADEQUATE ANCHORING IS ATTAINED. BARK MULCH SHALL BE REAPPLIED AS NEEDED.

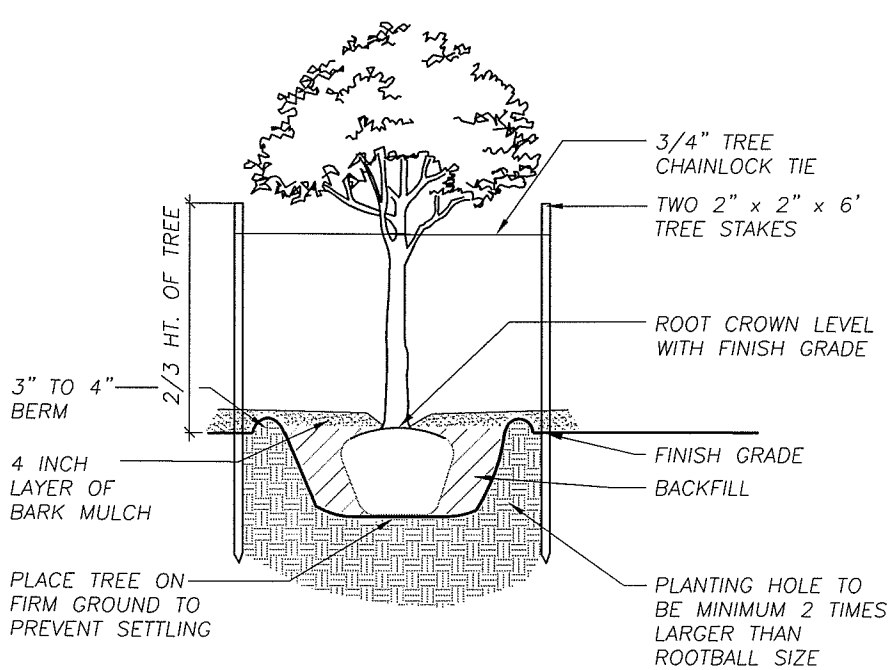

TREE PLANTING DETAIL

NOT TO SCALE

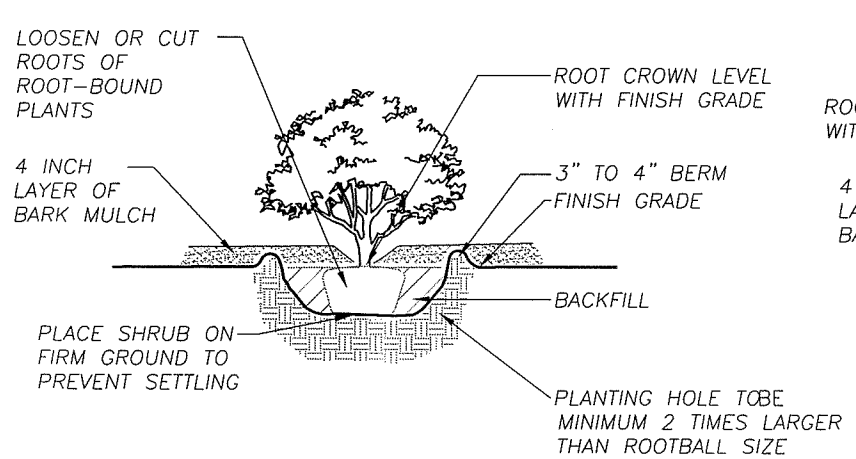

SHRUB PLANTING DETAIL

NOT TO SCALE

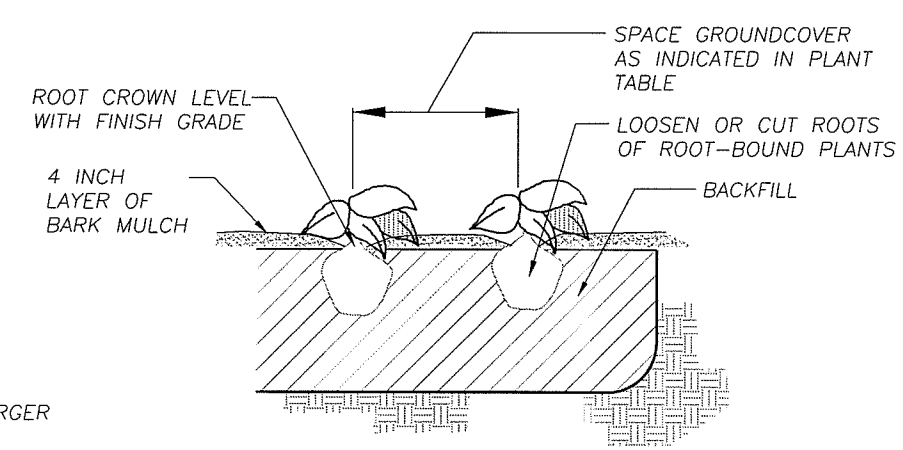

GROUNDCOVER PLANTING DETAIL

NOT TO SCALE

DESIGNED ME
DRAWN BAK
CRP 301422
HOR. NA
VERT. NA
DATE 6/23/03
DWG. LD10
SHEET OF

CALL 48 HOURS BEFORE YOU DIG 1-800-553-4344 "It's the Law" NORTHWEST UTILITIES NOTIFICATION CENTER

STATE OF WASHINGTON JOEL M. ERICK 29030 REGISTERED PROFESSIONAL ENGINEER EXPIRES:MAY 26, 2005

DESIGN & ENGINEERING DIVISION
DESIGN SECTION

ST. JOHNS RD (NE 50TH TO NE 72ND)
LANDSCAPE NOTES

proud past, promising future
CLARK COUNTY WASHINGTON

N:\CIP\PROJECTS\301422-STJohns-50thTo72nd\DESIGN\Landscape Design\LD01-10.dwg, Layout1 (10), 3/18/2004 5:33:07 PM, begleyk