CAPITAL IMPROVEMENTS PROGRAM

N.E. 63RD STREET IMPROVEMENTS

FROM ANDRESEN ROAD TO INTERSTATE 205
COUNTY ROAD PROJECT # 330422

PLANS FOR THE CONSTRUCTION OF ROADWAYS AND STORM DRAINAGE

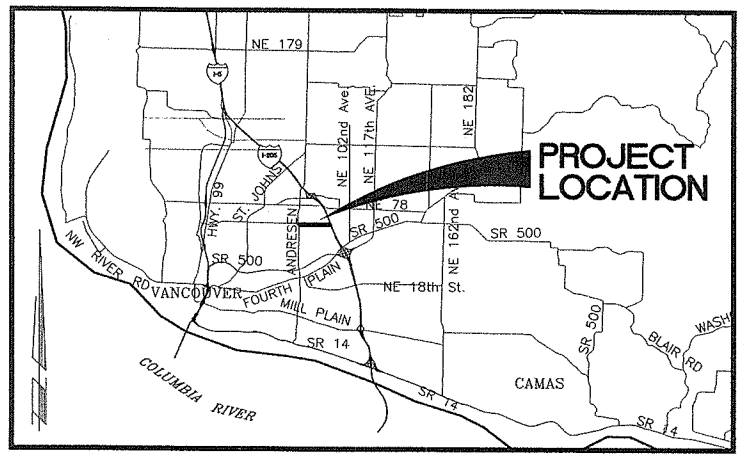

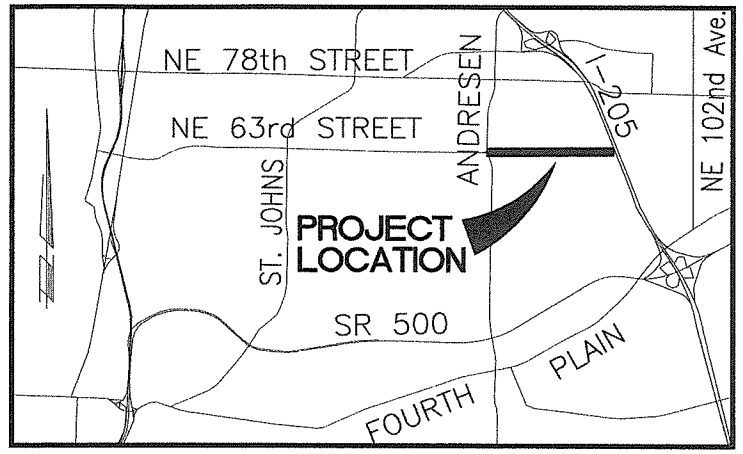

VICINITY MAPS

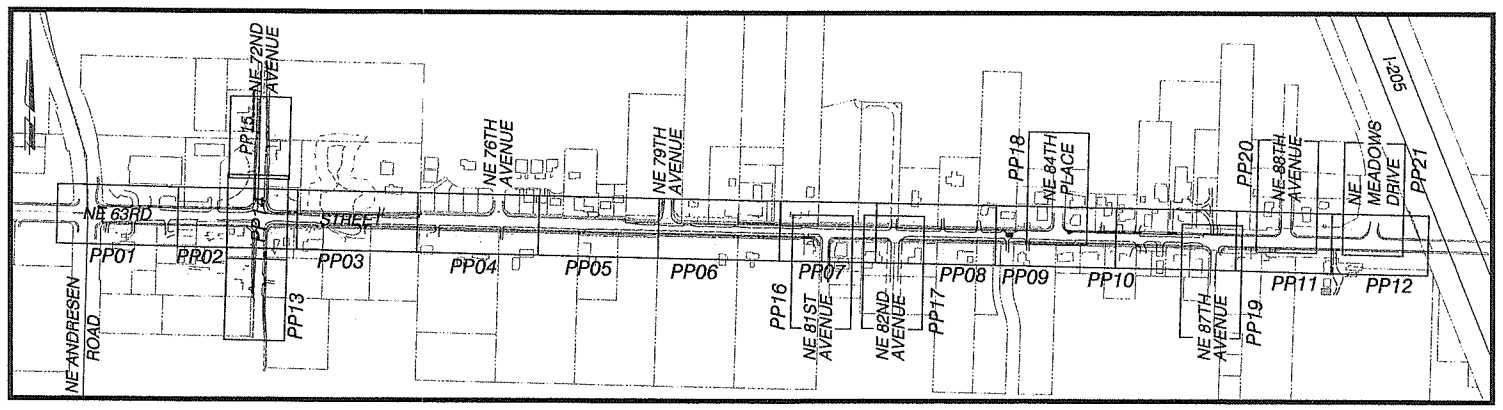

KEY MAP TO SHEETS

INDEX OF SHEETS

NOT INCLUDED

SHT.	DWG.	DESCRIPTION
1	CV1	COVER SHEET
2	SQ1	GENERAL NOTES, LEGENDS AND BENCHMARKS
3	SQ2	SUMMARY OF QUANTITIES
4	SQ3	EXISTING CATCH BASIN AND MANHOLE TABLES
5	TS1	TYPICAL ROAD SECTIONS
6	TS2	TYPICAL ROAD SECTIONS
7	EC1	EROSION CONTROL PLAN
8	EC2	EROSION CONTROL PLAN
9	EC3	EROSION CONTROL PLAN
10	EC4	EROSION CONTROL DETAILS AND NOTES
11	D01	ROADWAY DETAILS
12	D02	ROADWAY DETAILS
13	D03	ROADWAY DRAINAGE DETAILS
14	D04	ROADWAY DRAINAGE DETAILS
15	RW1	RETAINING WALL PROFILES
16	RW2	RETAINING WALL PROFILES
17	RW3	RETAINING WALL PROFILES
18	RW4	RETAINING WALL PROFILES
19	RW5	RETAINING WALL DETAILS
20	WQ1	STORMWATER FACILITY
21	WQ2	STORMWATER FACILITY DETAILS
22	WQ3	STORMWATER FACILITY WALL PROFILES
23	WQ4	STORMWATER FACILITY LANDSCAPE PLAN
24	WQ5	WATER QUALITY CARTRIDGE DETAILS
25	WQ6	STORMWATER FACILITY DETAILS
26	PP01	PLAN AND PROFILE – NE 63rd ST., STA. 28+00 TO STA. 33+00
27	PP02	PLAN AND PROFILE – NE 63rd ST., STA. 33+00 TO STA. 38+00
28	PP03	PLAN AND PROFILE – NE 63rd ST., STA. 38+00 TO STA. 43+00
29	PP04	PLAN AND PROFILE – NE 63rd ST., STA. 43+00 TO STA. 48+00
30	PP05	PLAN AND PROFILE – NE 63rd ST, STA. 48+00 TO STA. 53+00
31	PP06	PLAN AND PROFILE – NE 63rd ST, STA. 53+00 TO STA. 58+00
32	PP07	PLAN AND PROFILE – NE 63rd ST, STA. 58+00 TO STA. 62+00
33	PP08	PLAN AND PROFILE – NE 63rd ST, STA. 62+00 TO STA. 67+00
34	PP09	PLAN AND PROFILE – NE 63rd ST, STA. 67+00 TO STA. 72+00
35	PP10	PLAN AND PROFILE – NE 63rd ST, STA. 72+00 TO STA. 77+00
36	PP11	PLAN AND PROFILE – NE 63rd ST, STA. 77+00 TO STA. 81+00
37	PP12	PLAN AND PROFILE – NE 63rd ST, STA. 81+00 TO STA. 85+25
38	PP13	PLAN AND PROFILE – NE 72nd AVE, STA. 18+00 TO STA. 21+50
39	PP14	PLAN AND PROFILE – NE 72nd AVE, STA. 21+50 TO STA. 25+00
40	PP15	PLAN AND PROFILE – NE 72nd AVE, STA. 25+00 TO STA. 28+50
41	PP16	PLAN AND PROFILE – NE 81st AVENUE
42	PP17	PLAN AND PROFILE – NE 82nd AVENUE
43	PP18	PLAN AND PROFILE – NE 84th PLACE
44	PP19	PLAN AND PROFILE – NE 87th AVENUE
45	PP20	PLAN AND PROFILE – NE 88th AVENUE
46	PP21	PLAN AND PROFILE – NE MEADOWS DR.
47	PH01	POTHOLE DATA CROSS SECTIONS
48	L01	LANDSCAPE DETAILS AND NOTES
49	T01	TRAFFIC SIGNAL DETECTOR REPLACEMENT AND IMPROVEMENTS
50	T02	NE 72ND AVENUE TRAFFIC SIGNAL PLAN
51	T03	NE 72ND AVENUE DETECTOR LOOP SCHEMATIC
52	T04	NE 72ND AVENUE TYPICAL STANDARD DETAILS
53	T05	NE 72ND AVENUE TRAFFIC SYSTEM DETAILS
54	T06	N.E. 63rd STREET SIGNING/STRIPING PLAN
55	T07	N.E. 63rd STREET SIGNING/STRIPING PLAN
56	T08	N.E. 63rd STREET SIGNING/STRIPING PLAN
57	T09	N.E. 63rd STREET SIGNING/STRIPING PLAN
58	T10	N.E. 63rd STREET SIGNING/STRIPING PLAN
59	T11	N.E. 63rd STREET SIGNING/STRIPING PLAN
60	T12	N.E. 72nd AVENUE SIGNING/STRIPING PLAN
61	T13	STRIPING DETAILS
62	T14	SIGN SCHEDULE
63	T15	SIGNING DETAILS

COMMISSIONERS:

BETTY SUE MORRIS, Chair
CRAIG PRIDEMORE, Commissioner
JUDIE STANTON, Commissioner

CLARK COUNTY WASHINGTON
proud past, promising future

CALL 48 HOURS BEFORE YOU DIG
1-800-424-5555
"It's the Law"
CLARK COUNTY UTILITIES COORDINATING COUNCIL

DEPARTMENT OF PUBLIC WORKS

DESIGN AND ENGINEERING DIVISION - DESIGN SECTION

PAMELA KIEL WIEDEMANN
STATE OF WASHINGTON
32440
EXPIRES: AUG. 31, 2005
PROFESSIONAL ENGINEER

otak Incorporated
700 Washington Street
Suite 401
Vancouver, WA 98660-3139
Phone: (360) 737-9613
FAX: (360) 737-9651

90% SUBMITTAL - MAY 28, 2004
NOT FOR CONSTRUCTION

Quality Assurance	Project Manager	Director of Public Works
Tom Grange, P.E. DATE	Robin Washington DATE	Peter Capell, P.E. DATE

CLARK COUNTY WASHINGTON
proud past, promising future

Recommended for Approval

Grading _____ Erosion _____

Storm Water Plan _____

Development Review Manager _____ Date

V: GRANTE 05/27/04 4:47pm --> R:\DWG\C9445001.DWG

LINE LEGEND

- PROPOSED ROW LINE
- PROPOSED TEMPORARY CONSTRUCTION EASEMENT
- PROPOSED PERMANENT WALL EASEMENT
- PROPOSED EDGE OF PAVEMENT
- PROPOSED CURB AND GUTTER (TYPE A-1)
- PROPOSED CENTER LINE
- PROPOSED STORM DRAIN PIPE
- PROPOSED FILL LIMITS
- PROPOSED CUT LIMITS
- PROPOSED FENCE LINE
- PROPOSED SAWCUT LINE
- PROPOSED RETAINING WALL
- EXISTING ROW/PROPERTY LINE
- EXISTING EASEMENT
- EXISTING EDGE OF PAVEMENT
- EXISTING CURB LINE
- EXISTING CENTER LINE
- EXISTING FENCE LINE
- EXISTING TELEPHONE LINE
- EXISTING WATER LINE
- EXISTING UNDERGROUND ELECTRIC
- EXISTING SANITARY SEWER LINE
- EXISTING STORM DRAINAGE
- EXISTING GAS LINE
- EXISTING OVERHEAD POWERLINE
- EXISTING CULVERT
- EXISTING DITCH CENTER LINE
- EXISTING GUARDRAIL
- EXISTING BRUSH LINE
- EXISTING HEDGE
- EXISTING WETLAND BOUNDARY LINE
- EXISTING WETLAND BUFFER LINE

GENERAL NOTES

1. SURVEY DATUM PER CLARK COUNTY.
2. EXISTING UTILITIES SHOWN ON THE PLANS ARE PER SURFACE LOCATIONS AND RECORD DRAWINGS. THE CONTRACTOR SHALL VERIFY LOCATIONS OF ALL EXISTING UTILITIES PRIOR TO CONSTRUCTION.
3. ALL NECESSARY CONSTRUCTION SURVEY SHALL BE PROVIDED AT NO COST TO THE CONTRACTOR. HOWEVER, THE CONTRACTOR WILL BE RESPONSIBLE FOR REPLACING NEEDED SURVEY STAKES DESTROYED THROUGH NORMAL OPERATIONS, NEGLIGENCE, OR INATTENTION.
4. AT THE END OF EACH WORK DAY THE CONTRACTOR SHALL CLEAN UP THE PROJECT AREA AND LEAVE IT IN A NEAT AND SECURED MANNER. UPON COMPLETION, THE CONTRACTOR SHALL LEAVE THE PROJECT AREA FREE OF DEBRIS AND UNUSED MATERIAL.
5. THE CONTRACTOR SHALL PRUNE ALL VEGETATION, AS APPROVED, AWAY AND UP FROM THE STREET AS WELL AS ANY ROOT PRUNING AS DETERMINED BY THE ENGINEER. THE CONTRACTOR SHALL LEAVE THE PROJECT AREA FREE OF DEBRIS AND UNUSED MATERIAL.
6. ALL ROADWAY STATIONS ARE BASED UPON THE CONSTRUCTION CENTERLINE, WHICH IS REFERENCED TO THE RECORD OF SURVEY (R.O.S.) CENTERLINES.
7. IF EXISTING CONCRETE CURBS AND SIDEWALKS DESIGNATED TO REMAIN ARE DAMAGED THEY WILL BE REMOVED AND REPLACED TO ORIGINAL CONDITION AT THE CONTRACTOR'S EXPENSE.
8. AT A MINIMUM, THE CONTRACTOR IS TO MAINTAIN ALTERNATING ONE WAY TRAFFIC UNLESS APPROVED TRAFFIC CONTROL PLAN ALLOWS OTHERWISE.
9. CONTRACTOR TO NOTIFY THE C-TRAN OPERATION CHIEF, 72 HOURS PRIOR TO CONSTRUCTION NEAR ANY C-TRAN FACILITY.
10. CONTRACTOR TO COORDINATE UTILITY RELOCATIONS WITH CLARK PUBLIC UTILITIES FOR POWER, QWEST FOR TELEPHONE, N.W. NATURAL FOR GAS, COMCAST FOR CABLE TV, THE CITY OF VANCOUVER AND HAZEL DELL SEWER DISTRICT FOR SANITARY SEWER AND THE CITY OF VANCOUVER FOR WATER.
11. CONTRACTOR SHALL PROTECT EXISTING WATER SERVICE LINES. ALL DISTURBED WATER SERVICE LINES SHALL BE REPAIRED AS DIRECTED. ALL RELOCATED METERS WILL BE RESET IN ACCORD WITH CITY OF VANCOUVER STANDARDS AND SPECIFICATIONS. THE CONTRACTOR SHALL BE RESPONSIBLE FOR THE REPAIR OF EXISTING WATER SERVICE LINES DESTROYED THROUGH NEGLIGENCE AND/OR INATTENTION.
12. CONTRACTOR TO MAINTAIN INGRESS AND EGREES FROM THE FIRE STATION AND ALL PRIVATE PROPERTY DRIVEWAYS DURING CONSTRUCTION.
13. STREET AND PLANTER STRIP DIMENSIONS SHOWN FROM FACE OF CURB ON PLAN AND PROFILE SHEETS.

BENCHMARKS–CLARK COUNTY DATUM

DESCRIPTION	STATION	OFFSET	ELEVATION
SURVEY CONTROL POINT #10200 5/8" IRON ROD WITH RED PLASTIC CAP, "CONTROL 22689"	STA. 28+87.26	61.70' LT	268.50
SURVEY CONTROL POINT #153 3-5/8" BRASS DISK IN CONCRETE	STA. 49+68.06	0.00' LT	285.73
SURVEY CONTROL POINT #10203 P.K. NAIL WITH BRASS WASHER	STA. 51+19.68	17.96' LT	287.23
SURVEY CONTROL POINT #154 3-5/8" BRASS DISK IN CONCRETE	STA. 66+23.48	0.00' LT	266.71
SURVEY CONTROL POINT #155 TACK IN LEAD IN CONCRETE WALK	STA. 86+49.07	24.61' RT	254.66

SYMBOLS LEGEND

- PROPOSED MANHOLE (MH)
- PROPOSED CATCH BASIN (CB)
- PROPOSED CURB INLET (CI)
- PROPOSED COMBINATION CURB INLET (CCI)
- PROPOSED FLOW-SPLITTER MH
- PROPOSED DRYWELL
- PROPOSED STORMWATER TREATMENT VAULT
- PROPOSED FIRE HYDRANT
- PROPOSED WATER METER
- PROPOSED WATER VALVE
- EXISTING TRANSFORMER
- EXISTING ELEC TOWER
- EXISTING FIRE HYDRANT
- EXISTING CLEAN OUT
- EXISTING GAS VALVE
- EXISTING WATER METER
- EXISTING WATER VALVE
- EXISTING SIGNAL POLE
- EXISTING TELEPHONE VAULT
- EXISTING CABLE TV BOX
- EXISTING GAS LOCATOR PIPE
- EXISTING CURB OPENING INLET (CI)
- EXISTING CATCH BASIN (CB)
- EXISTING STORM MH OR DRYWELL
- EXISTING SANITARY SEWER
- EXISTING SHRUB
- EXISTING CONIFEROUS TREE
- EXISTING DECIDUOUS TREE
- EXISTING SIGN
- EXISTING J BOX
- EXISTING TELEPHONE MANHOLE
- EXISTING LIGHT
- EXISTING GUY ANCHOR
- EXISTING UTILITY POLE
- EXISTING MAIL BOX
- EXISTING TELEPHONE JUNCTION BOX
- EXISTING SPRINKLER HEAD
- TRAVERSE POINT
- TEST HOLE

FOR LANDSCAPE SYMBOLS
SEE DRAWING L01

PATTERN LEGEND

- PROPOSED PCC SIDEWALK AND DRIVEWAYS
- PROPOSED CONCRETE DRIVEWAY APPROACH
- NEW A.C. PAVEMENT DRIVEWAY RECONSTRUCTION
- PROPOSED CURB RAMP PER CLARK COUNTY DETAILS, SEE SHEET D01
- EXISTING BUILDING

NOTE SYMBOLS

- 1XX EXISTING SANITARY MANHOLE (SEE SHT. S03)
- 2XY EXISTING STORM DRAIN STRUCTURE (SEE SHT. S03)
- SD# PROPOSED STORM DRAIN STRUCTURE NOTE
- MH# PROPOSED STORM DRAIN MANHOLE NUMBER
- CB# PROPOSED CATCH BASIN/CURB INLET NUMBER
- XX CURB NUMBER
- XX ROAD CENTERLINE CURVE DATA
- X CONSTRUCTION NOTE

OBJECT TO BE:

REMOVED	= RM
RELOCATED	= RL
ABANDONED	= AB
REPLACED & RELOCATED	= RP
RELOCATED & ADJUSTED TO GRADE	= RA
ADJUSTED TO GRADE	= AD
TRIMMED	= T

BY: CONTRACTOR / CITY/COUNTY FORCES / OTHERS

NOT FOR CONSTRUCTION

DESIGNED: PKW
DRAWN: SLW
CRP: 330422
HORIZ. NA
VERT. NA
DATE: 5/28/2004
DWG: S01
SHEET 2 OF 63

CALL 48 HOURS BEFORE YOU DIG 1-800-424-5555 "It's the Law" NORTHWEST UTILITIES NOTIFICATION CENTER

PAMELA J. WILDEMANN STATE OF WASHINGTON 22440 REGISTERED PROFESSIONAL ENGINEER EXPIRES AUG. 31, 2005

otak Incorporated
700 Washington St. Suite 401
Vancouver, WA 98660
Phone: (360) 737-8863
FAX: (360) 737-9651

DESIGN & ENGINEERING DIVISION
NE 63RD STREET IMPROVEMENTS

GENERAL NOTES, LEGENDS AND BENCHMARKS

proud past, promising future
CLARK COUNTY WASHINGTON

XX/XX

EXISTING CATCH BASIN AND MANHOLE TABLES

SHEET PP01

EXISTING CATCH BASIN TABLE

202 *CATCH BASIN*
RIM= 268.53
IE OUT= 267.63 (8" SW)

EXISTING MANHOLE TABLE

101 *SAN MH*
RIM= 267.33
IE= 258.33 (8" E PVC)
IE= 258.33 (8" W PVC)
IE= 258.33 (8" N PVC)

201 *STORM MH*
RIM= 269.52
IE= 261.02 (18" E CMP)
IE= 261.02 (18" W CPP)
IE= 261.02 (18" N CMP)
(HALF FULL WITH SILT)
IE= 261.02 (18" S CMP)
(HALF FULL WITH SILT)

203 *STORM MH*
RIM= 266.41
IE IN= 261.31 (18" E)
IE IN= 261.31 (18" W)
IE OUT= 261.31 (18" S)

SHEET PP04

EXISTING CATCH BASIN TABLE

205 *CATCH BASIN*
RIM= 269.99
IE OUT= 266.99 (10" S)

207 *CATCH BASIN*
RIM= 281.18
IE OUT= 278.18 (10" W)

EXISTING MANHOLE TABLE

102 *SAN MH*
RIM = 279.60
IE= 268.00 (8" N)

204 *STORM MH*
RIM= 270.20
IE IN= 266.70 (10" N)
IE OUT= 266.50 (12" E)

206 *STORM MH*
RIM= 279.26
IE IN= 274.36 (10" E)
IE IN= 265.26 (12" W)
IE OUT= 265.26 (10" N)

SHEET PP05

EXISTING MANHOLE TABLE

104 *SAN MH*
RIM= 287.01
IE IN= 279.41 (8" E)
IE OUT= 279.41 (8" N)

105 *SAN MH*
RIM= 287.41
IE OUT= 280.11 (8" E)

SHEET PP07

EXISTING CATCH BASIN TABLE

209 *CATCH BASIN*
RIM= 272.98
IE OUT= 269.48 (8" N)

EXISTING MANHOLE TABLE

106 *SAN MH*
RIM= 274.63
IE IN= 266.43 (8" 2)
IE OUT= 266.43 (8" E)

208 *STORM DRYWELL*
RIM= 272.97
IE IN= 268.37 (8" S)

SHEET PP08

EXISTING MANHOLE TABLE

107 *SAN MH*
RIM= 271.29
IE IN= 264.19 (8" W)
IE OUT= 264.19 (8" E)

108 *SAN MH*
RIM= 268.05
IE IN= 261.65 (8" W)
IE OUT= 261.65 (8" E)

SHEET PP09

EXISTING CATCH BASIN TABLE

211 *CATCH BASIN*
RIM= 266.93
IE OUT= 264.33 (8" S)

EXISTING MANHOLE TABLE

109 *SAN MH*
RIM = 270.12
IE IN = 259.72 (8" E)
IE IN= 259.72 (8" W)
IE = 259.72 (8" S)
IE = 259.72 (8" N)

210 *STORM DRYWELL*
RIM = 266.83
IE IN = 262.63 (8" N)

SHEET PP10

EXISTING CATCH BASIN TABLE

213 *CATCH BASIN*
RIM= 262.68
IE OUT= 260.38 (12" W)

215 *CATCH BASIN*
RIM= 260.48
IE OUT= 258.68 (8" SW)

EXISTING MANHOLE TABLE

110 *SAN MH*
RIM= 276.55
IE IN= 260.75 (8" W)
IE OUT= 260.75 (8" E)

111 *SAN MH*
RIM= 272.43
IE OUT= 261.63 (8" W)

212 *STORM MH*
RIM= 263.74
IE IN= 12" E)

214 *STORM MH*
RIM= 263.15
IE IN= 258.55 (8" NE)

SHEET PP11

EXISTING CATCH BASIN TABLE

216 *CATCH BASIN*
RIM= 254.85
IE OUT= 250.25 (15" N)

217 *CATCH BASIN*
RIM= 254.94
IE OUT= 253.04 (8" W)

218 *CATCH BASIN*
RIM= 254.69
IE OUT= 250.99 (15" S)

SHEET PP12

EXISTING CATCH BASIN TABLE

219 *CATCH BASIN*
RIM= 257.42
IE OUT= 254.42 (8" NE)
IN IE= 193.16 (12"S)
IN IE= 193.26 (12"N)

220 *CATCH BASIN*
RIM= 257.01
IE IN= 2253.21 (8" SW)
IE OUT= 253.21 (8" E)

221 *CATCH BASIN*
RIM= 258.02
IE OUT= 256.42 (8" SE)

222 *CATCH BASIN*
RIM= 257.60
IE IN= 253.80 (8" NW)
IE OUT= 253.80 (8" S)

SHEET PP13

EXISTING CATCH BASIN TABLE

224 *CATCH BASIN*
RIM= 281.64
IE OUT= 277.54 (10" W)

EXISTING MANHOLE TABLE

223 *STORM DRYWELL*
RIM= 281.99
IE IN= 276.99 (10" E)
IE IN= 276.99 (12" S)

225 *STORM DRYWELL*
RIM= 285.27
IE IN= 276.77 (12" N)

SHEET PP16

EXISTING CATCH BASIN TABLE

227 *CATCH BASIN*
RIM= 277.82
IE OUT= 275.72 (8" E)

228 *CATCH BASIN*
RIM= 279.14
IE OUT= 275.64 (8" W)

EXISTING MANHOLE TABLE

226 *STORM MH*
RIM= 279.83
IE IN= 275.73 (8" E)
IE IN= 275.73 (8" W)
IE OUT= 275.73 (12" S)

SHEET PP17

EXISTING CATCH BASIN TABLE

230 *CATCH BASIN*
RIM= 268.22
IE IN = 266.22 (6" W)

231 *CATCH BASIN*
RIM= 268.39
IE OUT = 266.49 (6" E)

SHEET PP18

EXISTING MANHOLE TABLE

109 *SAN MH*
RIM = 270.12
IE IN = 259.72 (8" E)
IE IN= 259.72 (8" W)
IE = 259.72 (8" S)
IE = 259.72 (8" N)

NOT FOR CONSTRUCTION

DESIGN & ENGINEERING DIVISION
NE 63RD STREET IMPROVEMENTS

EXISTING CATCH BASIN AND MANHOLE TABLES

CLARK COUNTY WASHINGTON
proud past, promising future

otak Incorporated
700 Washington St. Suite 401
Vancouver, WA 98660
Phone: (360) 737-8800
FAX: (360) 737-9851

DESIGNED: SLW
DRAWN: GME
CRP: 3304022
HORIZ. NA
VERT. NA
DATE: 5/28/2004
DWG: S03
SHEET 4 OF 63

CALL 48 HOURS BEFORE YOU DIG
1-800-424-5555
"It's the Law"
NORTHWEST UTILITIES NOTIFICATION CENTER

MICHAEL W. LEMEMANN
STATE OF WASHINGTON
22448
REGISTERED PROFESSIONAL ENGINEER
EXPIRES AUG. 31, 2005

REF LIST
scale: 1
solved
H44x001_border
CW WASH
V: GRANTE 05/27/04 4:50pm --> R:\DWG\C944S004.DWG

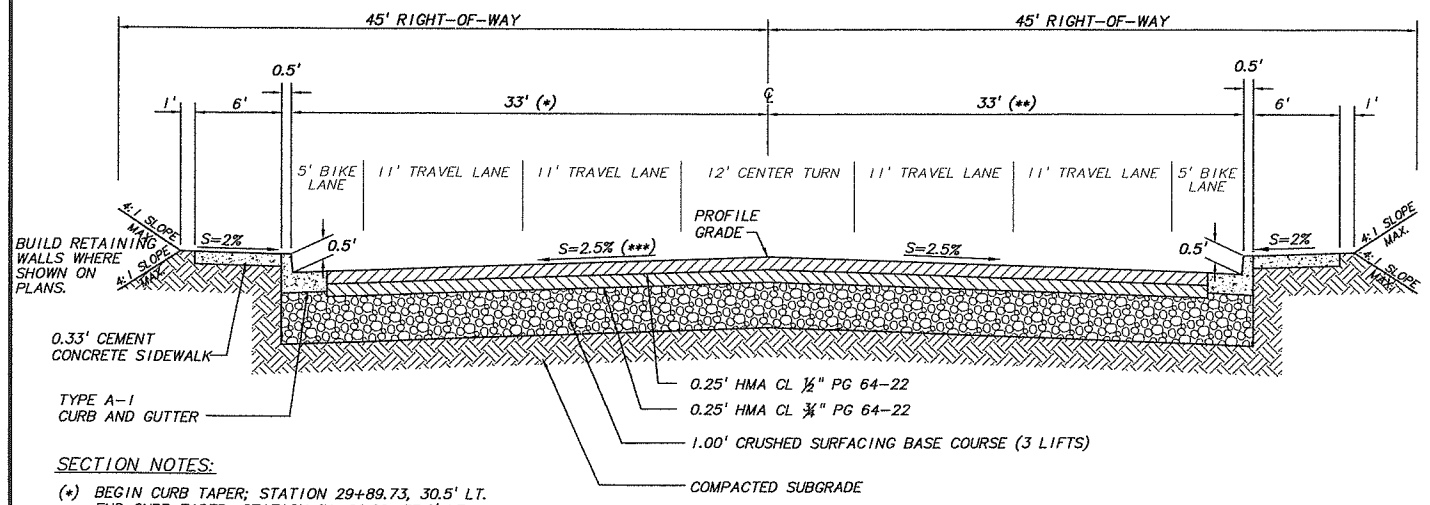

SECTION NOTES:

(*) BEGIN CURB TAPER; STATION 29+89.73, 30.5' LT.
END CURB TAPER; STATION 31+00.00, 33.0' LT.

(**) BEGIN CURB TAPER; STATION 29+90.10, 33.5' RT.
END CURB TAPER; STATION 31+00.00, 33.0' RT.

(***) SLOPE VARIES FROM +1.0%(⅟) TO MATCH EXISTING CURB, STATION 29+89.73 TO −2.5% AT STATION 31+00.00

N.E. 63RD STREET

N.T.S.

STATION 29+90 TO 36+45.28

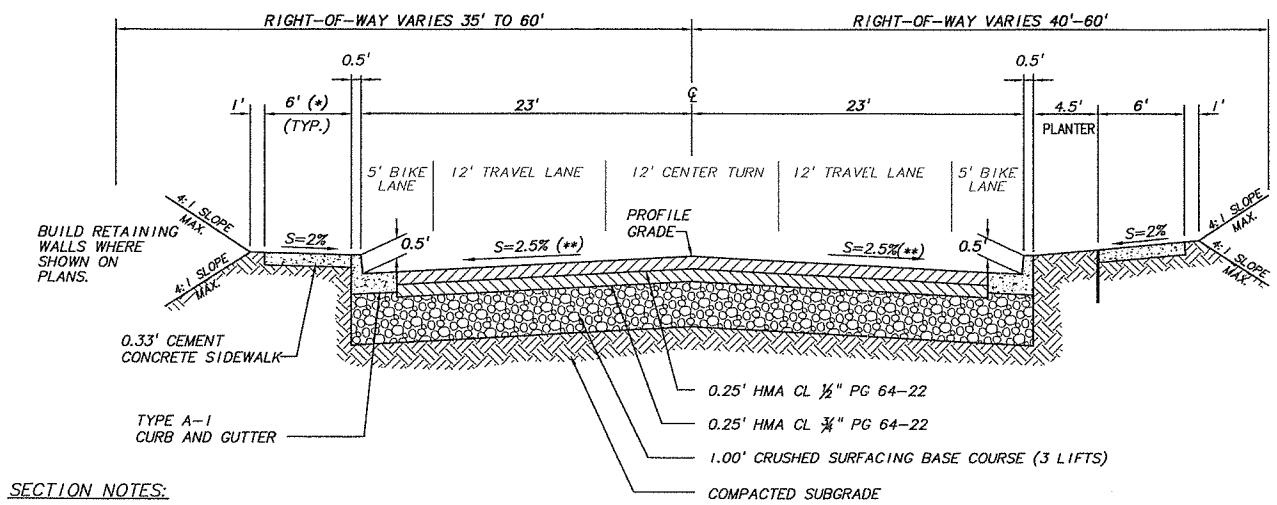

SECTION NOTES:

(*) CONSTRUCT 8' SIDEWALK:
STATION 37+03.50 TO STATION 38+10.36 LT
STATION 71+84.40 TO STATION 74+60.18 LT

(**) ADJUST CROSS SLOPES AT 72ND AVE INTERSECTION AS SHOWN ON PLANS

N.E. 63RD STREET

N.T.S.

STATION 36+45.28 TO STATION 38+10.36
STATION 69+08.28 TO STATION 78+85.00

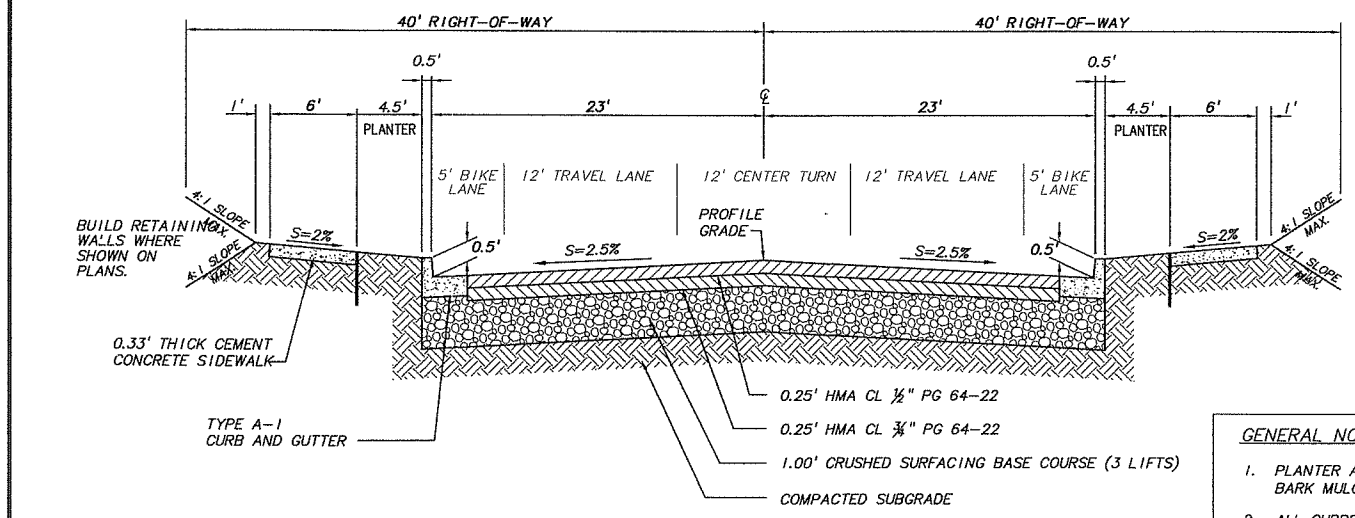

N.E. 63RD STREET

N.T.S.

STATION 38+10.36 TO STATION 42+00.00
STATION 61+79.21 TO STATION 69+08.28

STATION 56+30.00 TO STATION 58+94.27

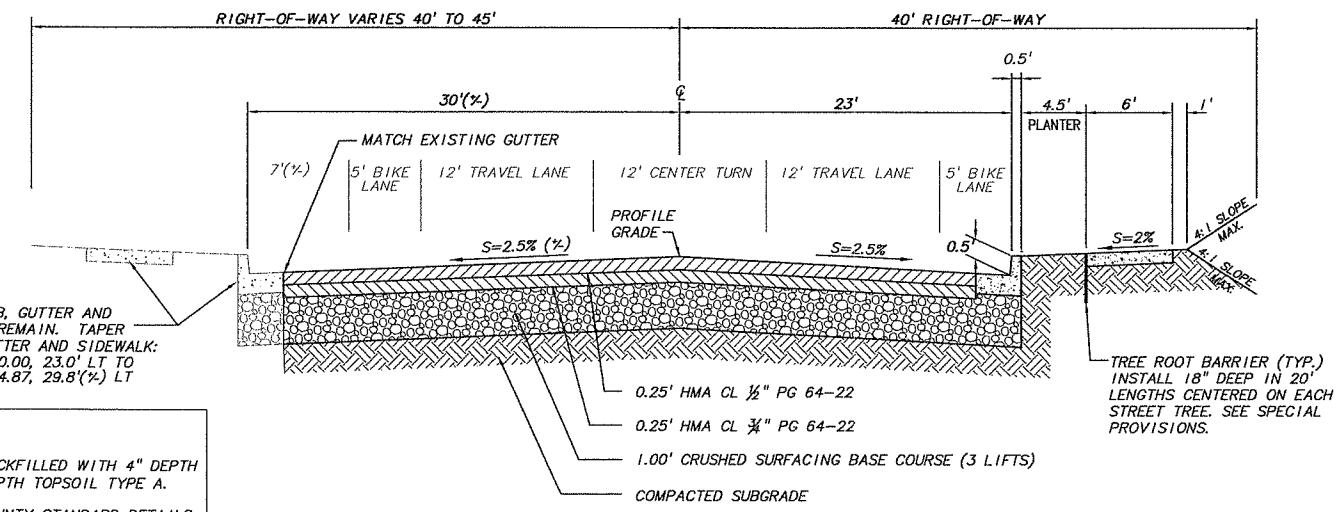

N.E. 63RD STREET

N.T.S.

STATION 42+00.00 TO STATION 51+50.00

GENERAL NOTES:

1. PLANTER AREAS TO BE BACKFILLED WITH 4" DEPTH BARK MULCH OVER 12" DEPTH TOPSOIL TYPE A.
2. ALL CURBS PER CLARK COUNTY STANDARD DETAILS. SEE SIDEWALK DETAIL, DWG. NO. D02.
3. CONTRACTOR TO MAINTAIN 5' MIN. CLEARANCE IN SIDEWALK AROUND MAILBOXES AND OTHER PERMANENT SIDEWALK OBSTRUCTIONS . SEE DETAIL ON SHEET D01
4. NE 63RD PAVEMENT SECTION TO EXTENC TO END OF CURB RETURNS ON SIDESTREETS

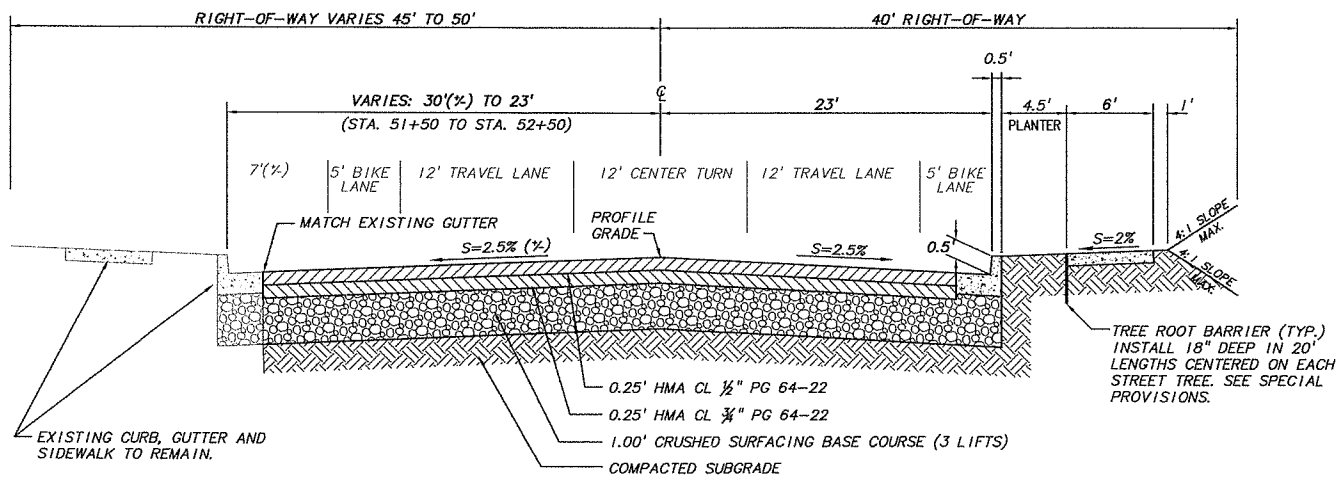

N.E. 63RD STREET

N.T.S.

STATION 51+50.00 TO STATION 56+30.00

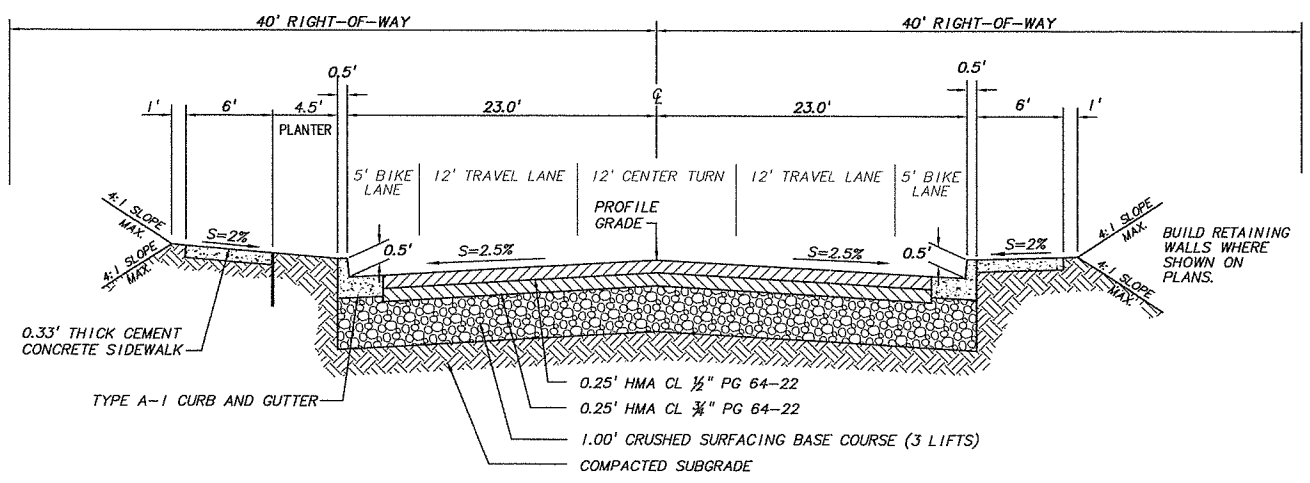

N.E. 63RD STREET

N.T.S.

STATION 58+94.27 TO STATION 61+79.21

NOT FOR CONSTRUCTION

DESIGN & ENGINEERING DIVISION
NE 63RD STREET IMPROVEMENTS

TYPICAL ROAD SECTIONS

DESIGNED: SLW
DRAWN: GME
CRP: 330422
HORIZ. NA
VERT. NA
DATE: 5/28/2004
DWG: TS1
SHEET 5 OF 63

CALL 48 HOURS BEFORE YOU DIG 1-800-424-5555 "It's the Law" NORTHWEST UTILITIES NOTIFICATION CENTER

RAFAEL WIESEMANN STATE OF WASHINGTON 22445 PROFESSIONAL ENGINEER EXPIRES AUG. 31, 2005

otak Incorporated
700 Washington St. Suite 401
Vancouver, WA 98660
PHONE: (360) 737-8610
FAX: (360) 737-9851

proud past, promising future
CLARK COUNTY WASHINGTON

F LIST
ale: 1
olved
4x001_border
4x500
f WASH

V: GRANTE 05/27/04 4:55pm --> R:\DWG\C944S005.DWG

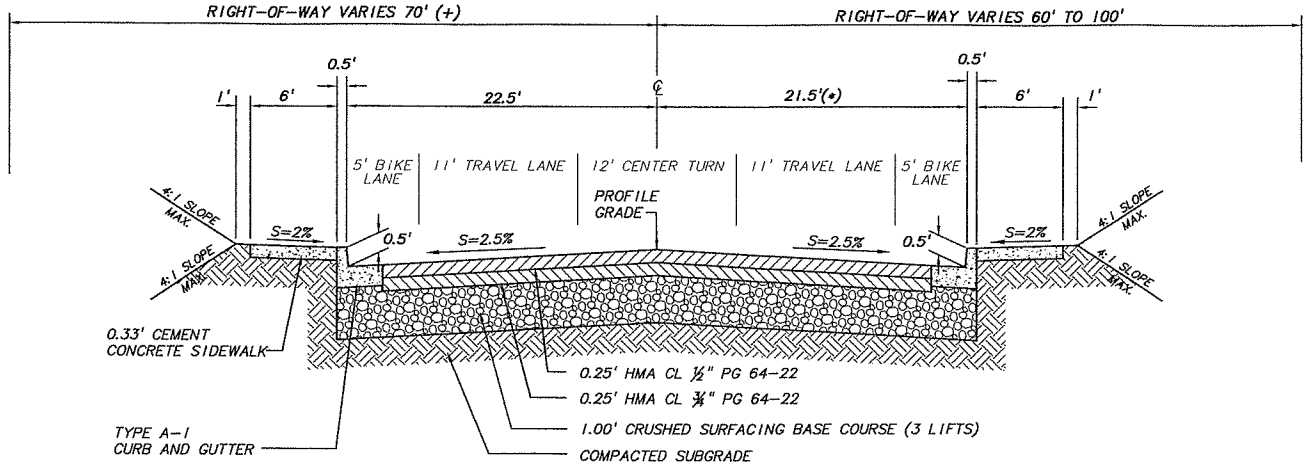

N.E. 63RD STREET

N.T.S.

STATION 78+85.00 TO STATION 85+10.90

SECTION NOTES:

(*) BEGIN CURB TAPER; STATION 78+80.00, 23.0' RT.
END CURB TAPER; STATION 79+30.00, 21.5' RT.

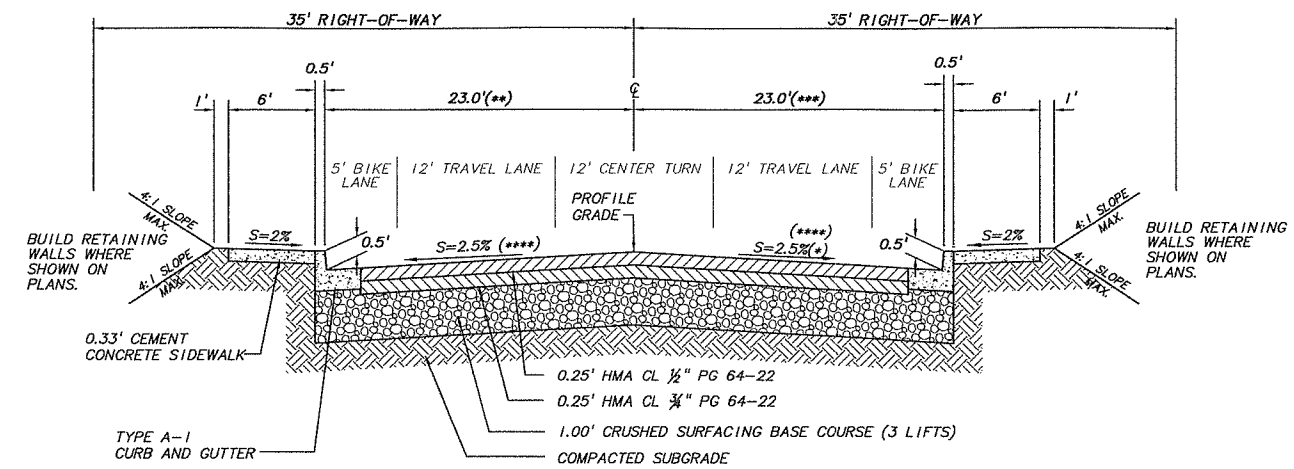

N.E. 72ND AVENUE

N.T.S.

STATION 19+45.00 TO STATION 25+38.40

SECTION NOTES:

(*) TRANSITION CROSS SLOPE TO 4.0%
STATION 24+50.00 TO STATION 25+00.00

(**) BEGIN CURB TAPER; STATION 19+85.05, 19.0' LT
END CURB TAPER; STATION 21+03.80, 23.0' LT

(***) BEGIN CURB TAPER; STATION 18+45.55, 28.0' RT
END CURB TAPER; STATION 18+96.80, 23.0' RT

(****) ADJUST CROSS SLOPES AT 63RD STREET
INTERSECTION AS SHOWN ON PLANS

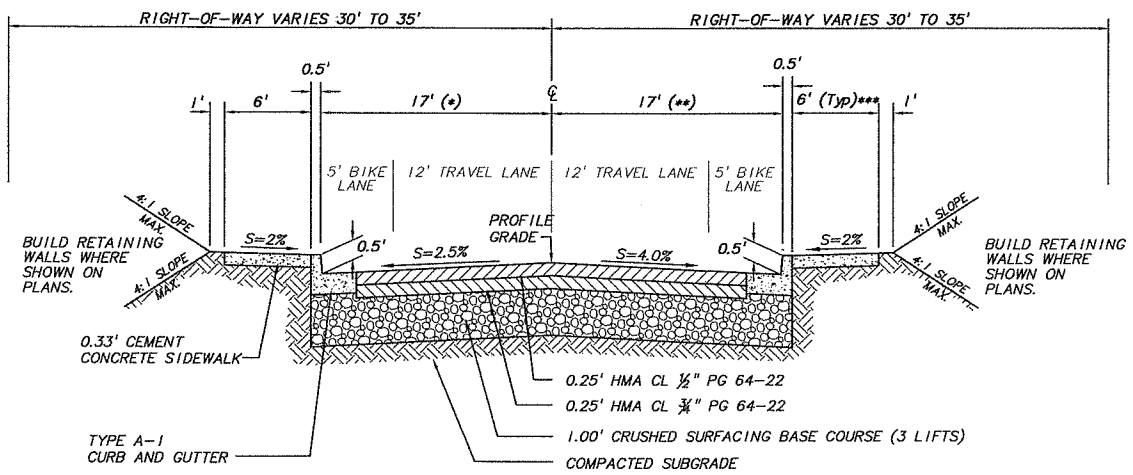

N.E. 72ND AVENUE

N.T.S.

STATION 25+38.40 TO STATION 28+20.00

SECTION NOTES:

(*) BEGIN CURB TAPER; STATION 25+38.48 23.0' LT.
END CURB TAPER; STATION 27+18.41, 17.0' LT.

(**) BEGIN CURB TAPER; STATION 25+38.44 23.0' RT.
END CURB TAPER; STATION 27+18.41, 17.0' RT.

(***) CONSTRUCT 8' SIDEWALK:
STATION 25+37.11 TO STATION 27+16.34 RT

GENERAL NOTES:

1. PLANTER AREAS TO BE BACKFILLED WITH 4" DEPTH BARK MULCH OVER 12" DEPTH TOPSOIL TYPE A.
2. ALL CURBS PER CLARK COUNTY STANDARD DETAILS. SEE SIDEWALK DETAIL, DWG. NO. D02.
3. CONTRACTOR TO MAINTAIN 5' MIN. CLEARANCE IN SIDEWALK AROUND MAILBOXES AND OTHER PERMANENT SIDEWALK OBSTRUCTIONS. SEE DETAIL ON SHEET D01
4. NE 63RD PAVEMENT SECTION TO EXTEND TO END OF CURB RETURNS ON SIDESTREETS

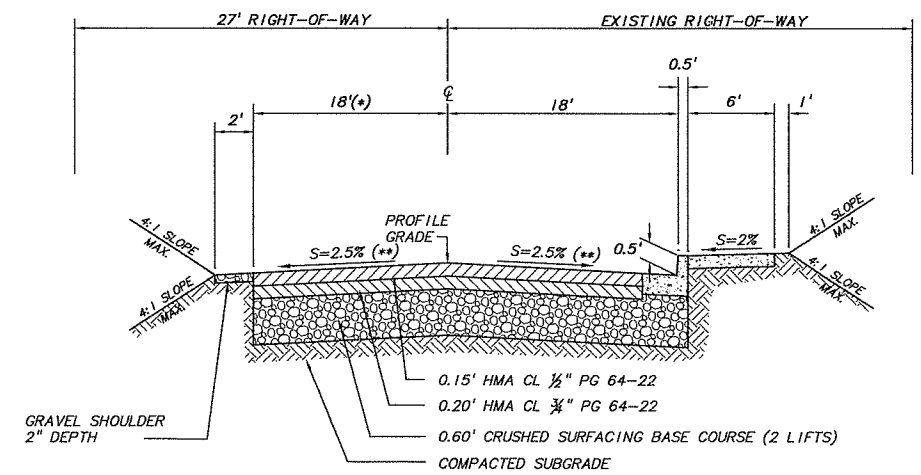

N.E. 81ST AVENUE

N.T.S.

SECTION NOTES:

(*) BEGIN EDGE OF PAVEMENT TAPER; STATION 8+64.84, 7.18' LT.
END EDGE OF PAVEMENT TAPER; STATION 9+41.64, 18.00' LT.

(**) WARP CROSS SLOPES TO MATCH EXISTING
CROSS SLOPES AT STATION 8+75.00

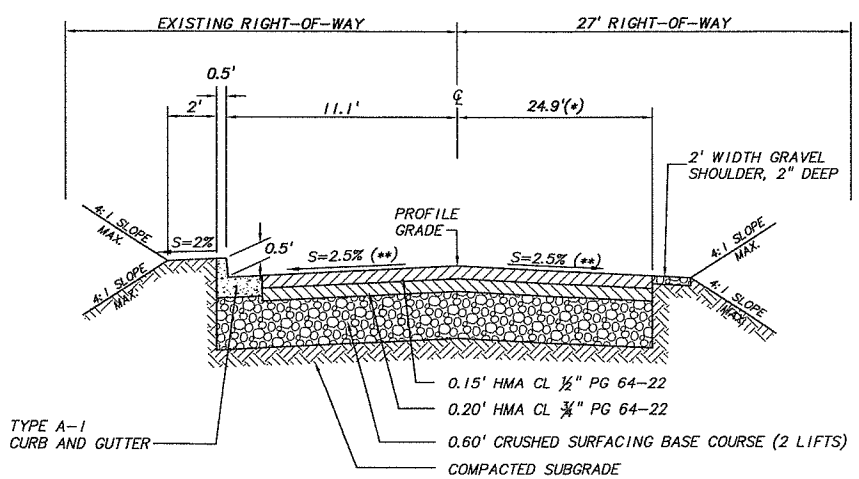

SECTION NOTES:

(*) BEGIN EDGE OF PAVEMENT TAPER; STATION 8+85.22, 8.85' RT.
END EDGE OF PAVEMENT TAPER; STATION 9+42.87, 24.87' RT.

(**) WARP CROSS SLOPES TO MATCH EXISTING
CROSS SLOPES AT STATION 9+00.00

N.E. 87TH AVENUE

N.T.S.

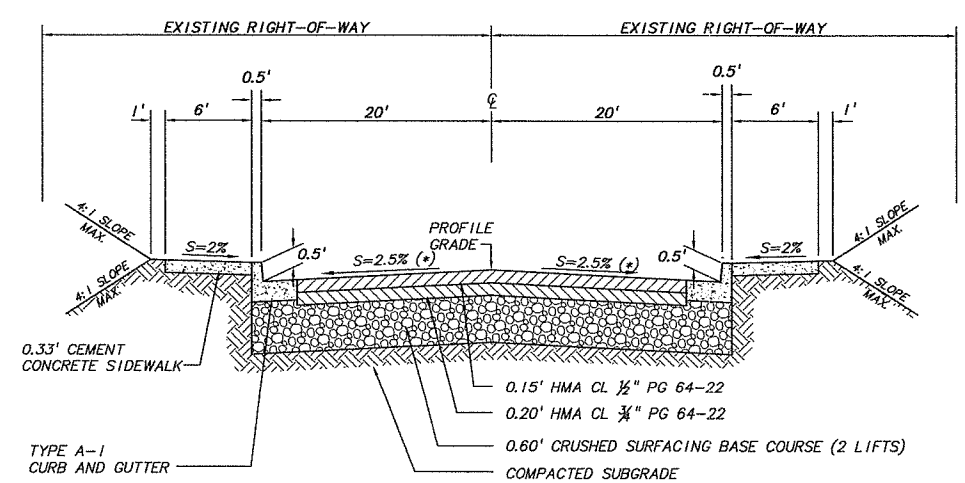

N.E. 88TH AVENUE

N.T.S.

SECTION NOTES:

(*) WARP CROSS SLOPES TO MATCH EXISTING
CROSS SLOPES AT STATION 10+75.00

NOT FOR CONSTRUCTION

DESIGN & ENGINEERING DIVISION
NE 63RD STREET IMPROVEMENTS

TYPICAL ROAD SECTIONS

DESIGNED:	SLW
DRAWN:	GME
CRP:	330422
HORIZ:	NA
VERT:	NA
DATE:	5/28/2004
DWG:	TS2
SHEET	6 OF 63

CALL 48 HOURS BEFORE YOU DIG 1-800-424-5555 "It's the Law" NORTHWEST UTILITIES NOTIFICATION CENTER

PAMELA A. WILDEMANN STATE OF WASHINGTON 22441 REGISTERED PROFESSIONAL ENGINEER
EXPIRES AUG. 31, 2005

otak Incorporated
700 Washington St. Suite 401
Vancouver, WA 98660
Phone: (360) 737-9813
FAX: (360) 737-9651

proud past, promising future
CLARK COUNTY WASHINGTON

V:\SHERYL 05/28/04 8:08am --> V:\PROJECT\11900\11944\DWG\C9445006.DWG

REF LIST
scale: 40
resolved
144x001_border
144x500
144x600
3W WASH
144B101
144b104
144b106
144B200

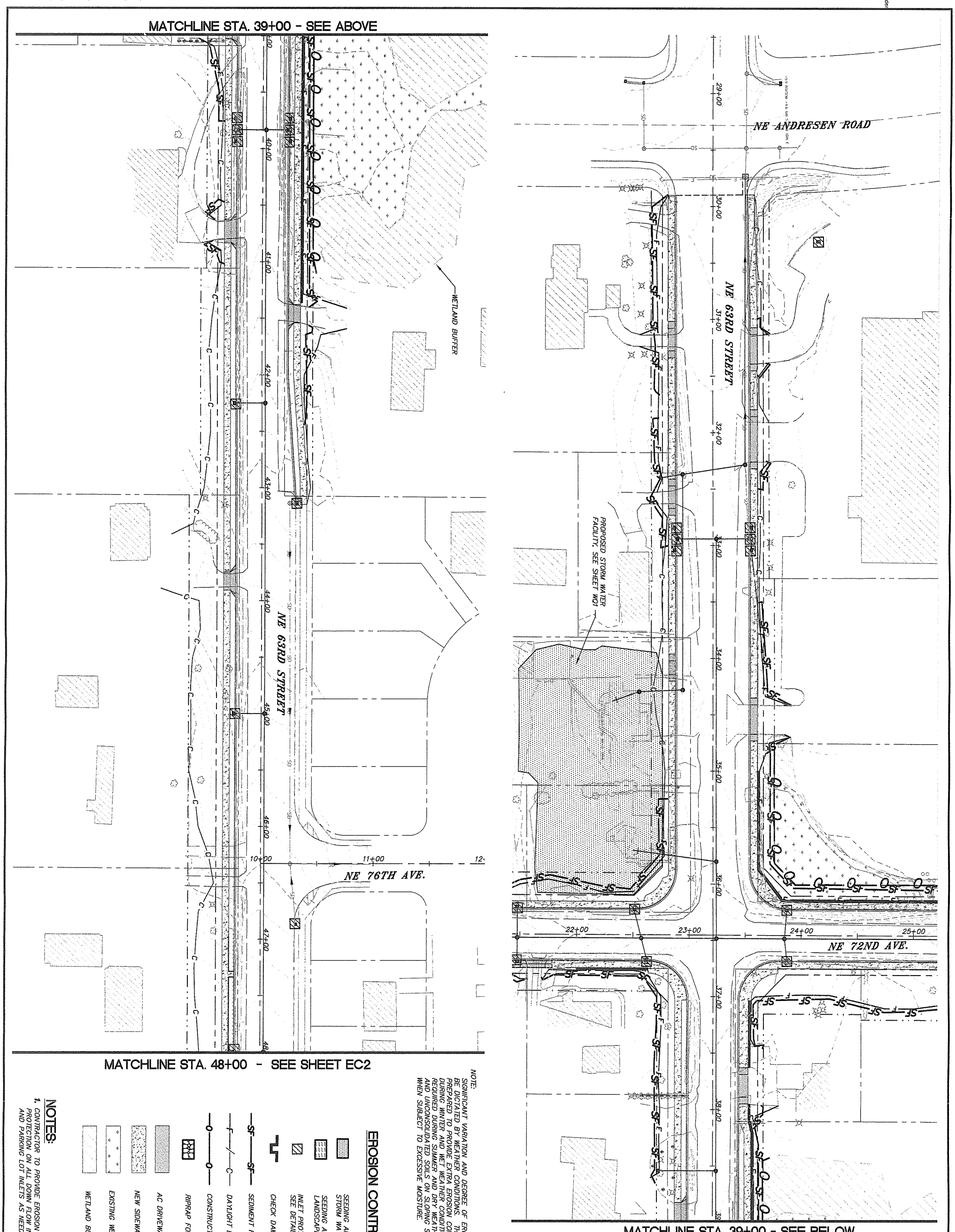

NOTE:
SIGNIFICANT VARIATION AND DEGREE OF EROSION CONTROL EFFORT WILL BE DICTATED BY WEATHER CONDITIONS. THE CONTRACTOR SHOULD BE PREPARED TO PROVIDE EXTRA EROSION CONTROL PROVISIONS AND EFFORT DURING WINTER AND WET WEATHER CONDITIONS BEYOND THAT NORMALLY REQUIRED DURING SUMMER AND DRY WEATHER CONDITIONS. FINE GRAINED AND UNCONSOLIDATED SOILS ON SLOPING SITES MAY BECOME UNSTABLE WHEN SUBJECT TO EXCESSIVE MOISTURE.

EROSION CONTROL LEGEND

- SEEDING AND MULCHING FOR STORM WATER FACILITY
- SEEDING AND MULCHING FOR LANDSCAPED AREAS.
- INLET PROTECTION SEE DETAIL ON DWG EC4.
- CHECK DAM (STRAW WADDLE OR ROCK)
- SEDIMENT FENCE
- DAYLIGHT LINE
- CONSTRUCTION FENCE
- RIPRAP FOR OUTFALL PROTECTION.
- AC DRIVEWAY APPROACH
- NEW SIDEWALK
- EXISTING WETLAND
- WETLAND BUFFER

NOTES:

1. CONTRACTOR TO PROVIDE EROSION CONTROL PROTECTION ON ALL DOWN FLOW INLETS/DITCHS AND PARKING LOT INLETS AS NEEDED OR DIRECTED.

NOT FOR CONSTRUCTION

proud past, promising future
CLARK COUNTY
WASHINGTON

DESIGN & ENGINEERING DIVISION
NE 63RD STREET IMPROVEMENTS

EROSION CONTROL PLAN

otak Incorporated
700 Washington St., Suite 401
Vancouver, WA 98660
Phone: (360) 737-9613
FAX: (360) 737-9651

PAMELA KIEL WIEDEMANN
STATE OF WASHINGTON
22440
REGISTERED PROFESSIONAL ENGINEER
EXPIRES:AUG. 31, 2005

CALL 48 HOURS BEFORE YOU DIG
1-800-424-5555
"It's the Law"
NORTHWEST UTILITIES NOTIFICATION CENTER

DESIGNED:	PKW
DRAWN:	GME
CRP:	330422
HORIZ.	1" = 40'
VERT.	NA
DATE:	5/28/2004
DWG:	EC1
SHEET	7 OF 63

V: GRANTE 05/27/04 5:03pm --> R:\DWG\C944S008.DWG

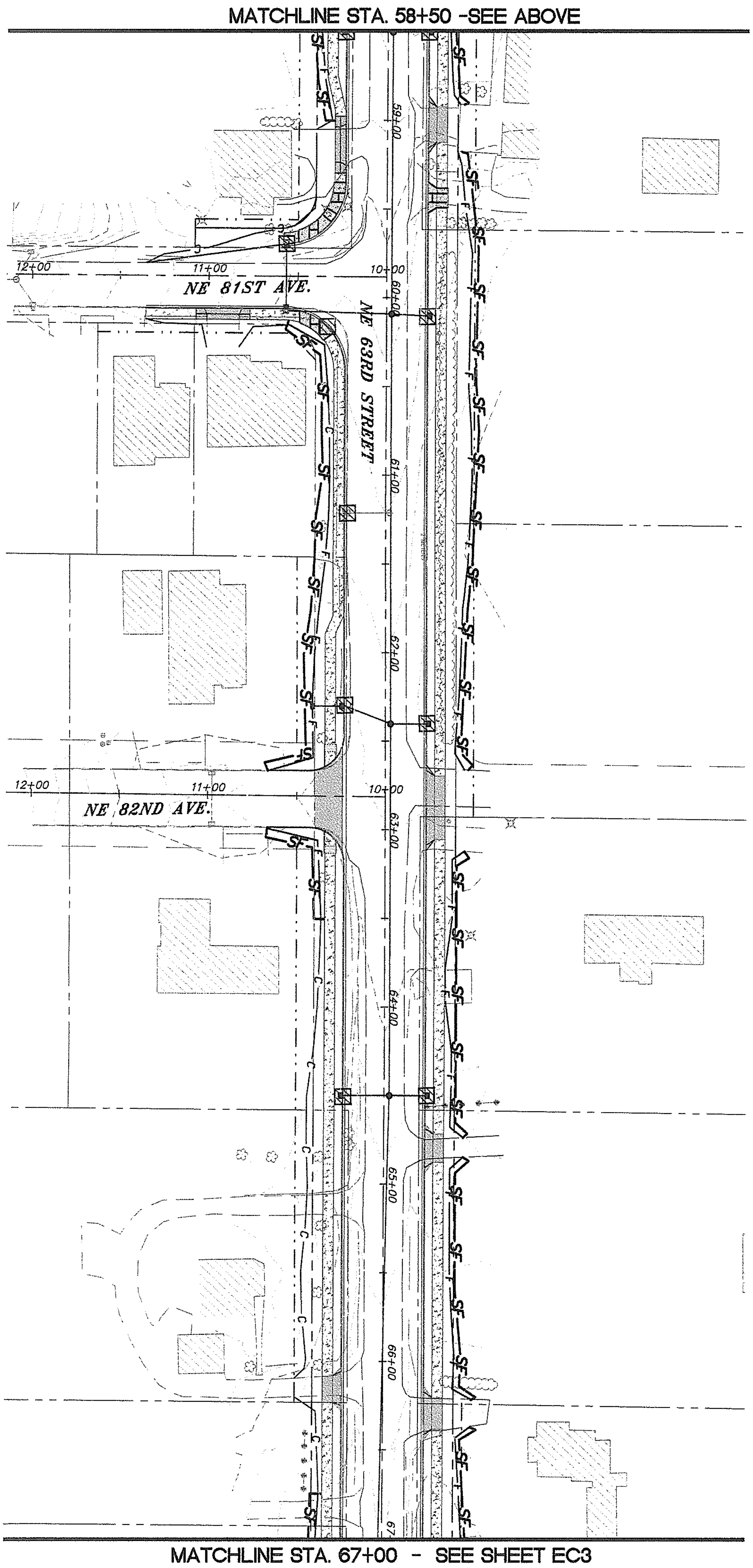

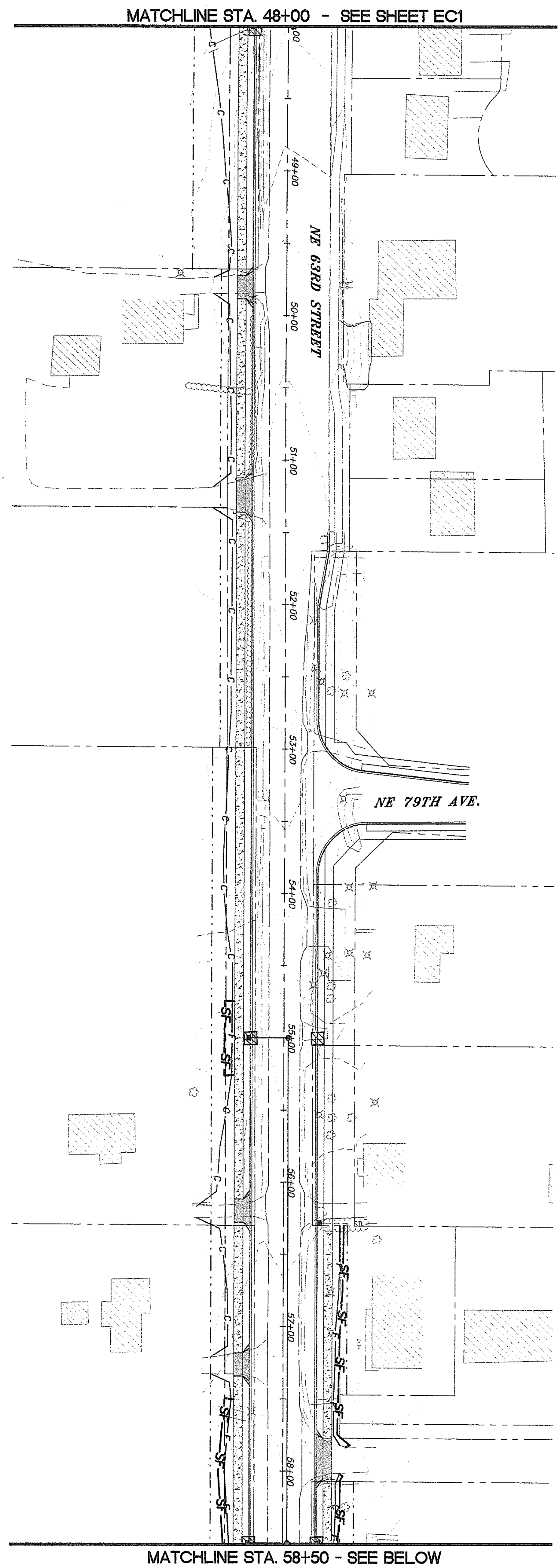

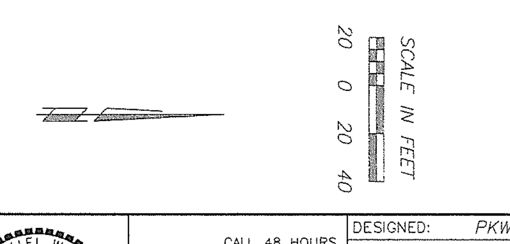

NOTE:
SIGNIFICANT VARIATION AND DEGREE OF EROSION CONTROL EFFORT WILL BE DICTATED BY WEATHER CONDITIONS. THE CONTRACTOR SHOULD BE PREPARED TO PROVIDE EXTRA EROSION CONTROL PROVISIONS AND EFFORT DURING WINTER AND WET WEATHER CONDITIONS BEYOND THAT NORMALLY REQUIRED DURING SUMMER AND DRY WEATHER CONDITIONS. FINE GRAINED AND UNCONSOLIDATED SOILS ON SLOPING SITES MAY BECOME UNSTABLE WHEN SUBJECT TO EXCESSIVE MOISTURE.

EROSION CONTROL LEGEND

- SEEDING AND MULCHING.
- INLET PROTECTION SEE DETAIL ON DWG EC4.
- CHECK DAM (STRAW WADDLE OR ROCK)
- —SF——SF— SEDIMENT FENCE
- —F—/—C— DAYLIGHT LINE
- RIPRAP FOR OUTFALL PROTECTION.
- AC DRIVEWAY APPROACH
- NEW SIDEWALK

NOTES:

1. CONTRACTOR TO PROVIDE EROSION CONTROL PROTECTION ON ALL DOWN FLOW INLETS/DITCHS AND PARKING LOT INLETS AS NEEDED OR DIRECTED.

NOT FOR CONSTRUCTION

CLARK COUNTY WASHINGTON
proud past, promising future

DESIGN & ENGINEERING DIVISION
NE 63RD STREET IMPROVEMENTS

EROSION CONTROL PLAN

otak Incorporated
700 Washington St., Suite 401
Vancouver, WA 98660
Phone: (360) 737-9613
FAX: (360) 737-9651

PAMELA KIEL WIEDEMANN
STATE OF WASHINGTON
32440
REGISTERED PROFESSIONAL ENGINEER
EXPIRES: AUG. 31, 2005

CALL 48 HOURS BEFORE YOU DIG
1-800-424-5555
"It's the Law"
NORTHWEST UTILITIES NOTIFICATION CENTER

DESIGNED:	PKW
DRAWN:	GME
CRP:	330422
HORIZ.	1" = 40'
VERT.	NA
DATE:	5/28/2004
DWG:	EC2
SHEET	8 OF 63

REF LIST
scale: 40
solved
44x001_border
44x500
CW WASH
44b101
44b104
44b106
44B200

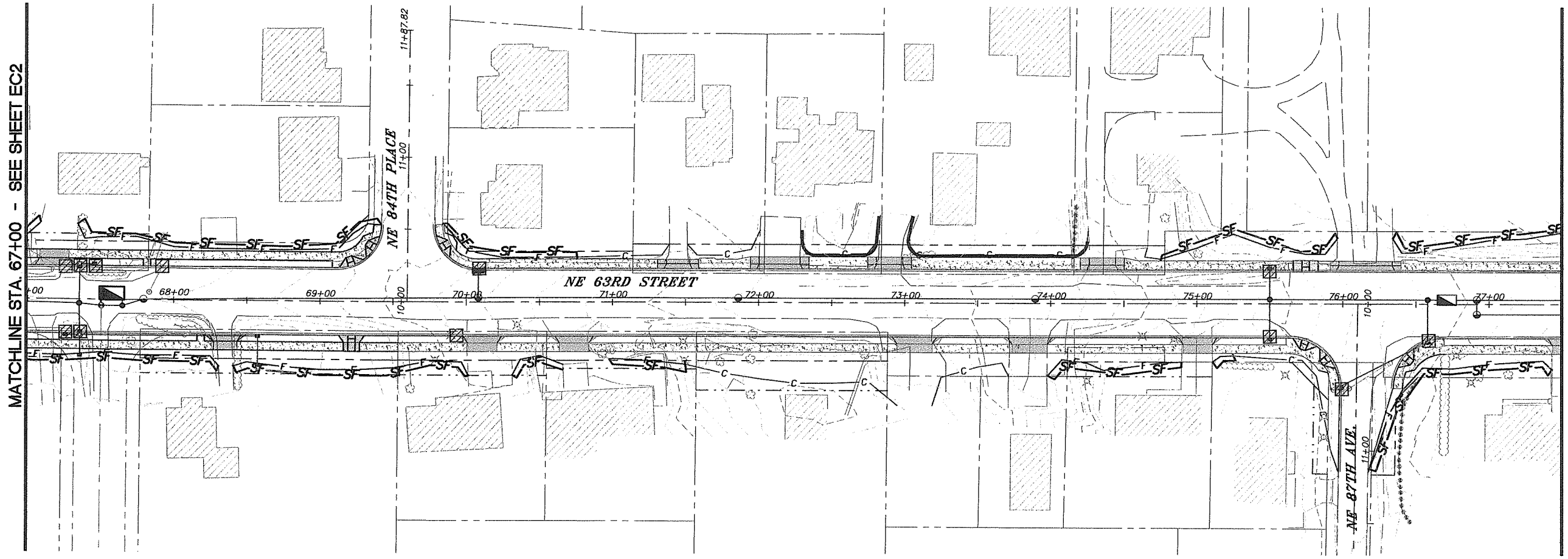

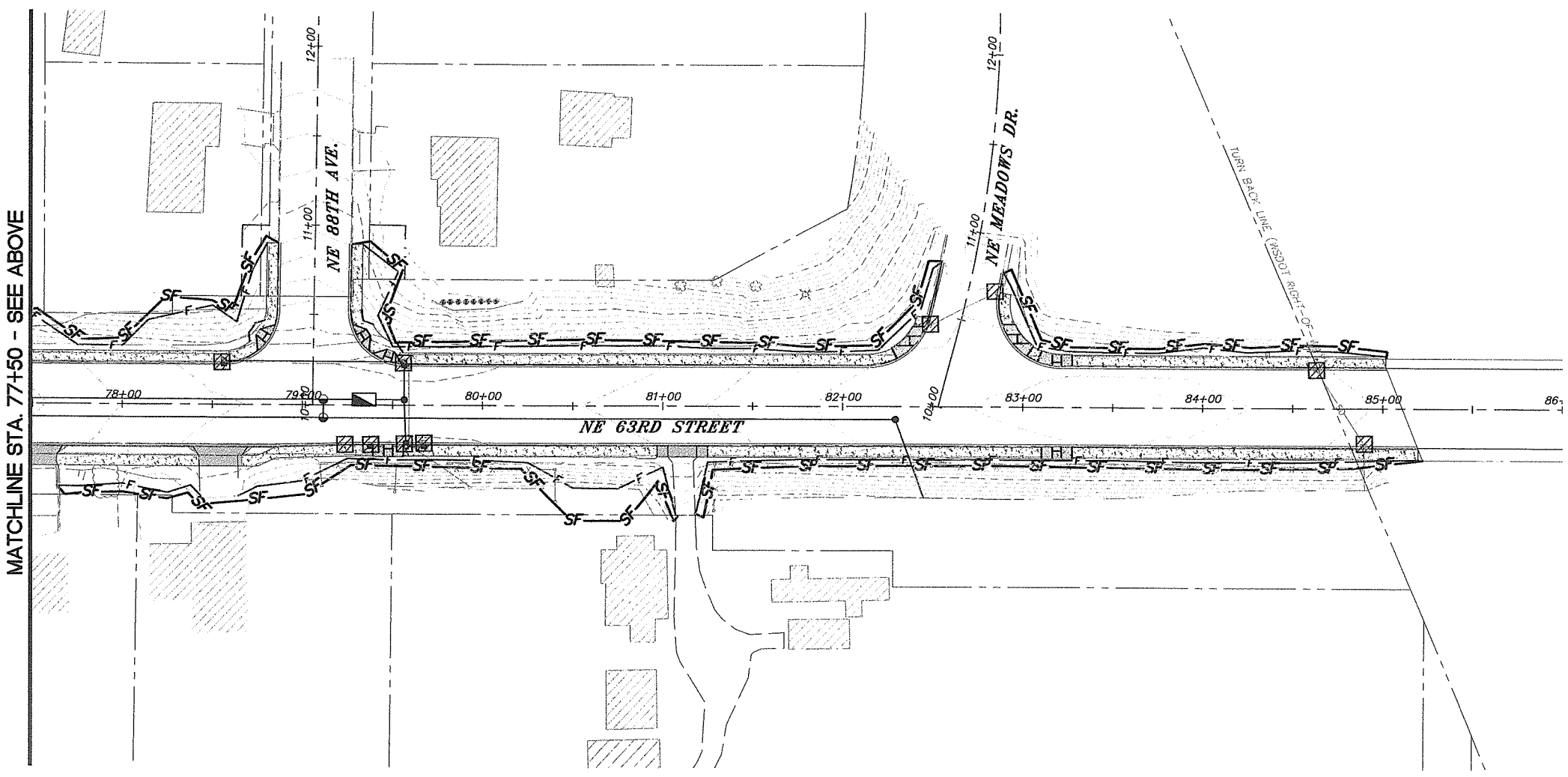

NOTE:
SIGNIFICANT VARIATION AND DEGREE OF EROSION CONTROL EFFORT WILL BE DICTATED BY WEATHER CONDITIONS. THE CONTRACTOR SHOULD BE PREPARED TO PROVIDE EXTRA EROSION CONTROL PROVISIONS AND EFFORT DURING WINTER AND WET WEATHER CONDITIONS BEYOND THAT NORMALLY REQUIRED DURING SUMMER AND DRY WEATHER CONDITIONS. FINE GRAINED AND UNCONSOLIDATED SOILS ON SLOPING SITES MAY BECOME UNSTABLE WHEN SUBJECT TO EXCESSIVE MOISTURE.

EROSION CONTROL LEGEND

- SEEDING AND MULCHING.
- INLET PROTECTION SEE DETAIL ON DWG EC4.
- CHECK DAM (STRAW WADDLE OR ROCK)
- SF — SF — SEDIMENT FENCE
- F — / — C — DAYLIGHT LINE
- RIPRAP FOR OUTFALL PROTECTION.
- AC DRIVEWAY APPROACH
- NEW SIDEWALK

NOTES:

1. CONTRACTOR TO PROVIDE EROSION CONTROL PROTECTION ON ALL DOWN FLOW INLETS/DITCHS AND PARKING LOT INLETS AS NEEDED OR DIRECTED.

NOT FOR CONSTRUCTION

DESIGN & ENGINEERING DIVISION
NE 63RD STREET IMPROVEMENTS

EROSION CONTROL PLAN

DESIGNED:	PKW
DRAWN:	GME
CRP:	330422
HORIZ.	1" = 40'
VERT.	NA
DATE:	5/28/2004
DWG:	EC3
SHEET	9 OF 63

CALL 48 HOURS BEFORE YOU DIG
1-800-424-5555
"It's the Law"
NORTHWEST UTILITIES NOTIFICATION CENTER

PAMELA W. LEDEMANN
STATE OF WASHINGTON
22445
REGISTERED PROFESSIONAL ENGINEER
EXPIRES AUG. 31, 2005

otak Incorporated
700 Washington St. Suite 401
Vancouver, WA 98660
Phone: (360) 737-8919
FAX: (360) 737-9651

proud past, promising future
CLARK COUNTY
WASHINGTON

REF LIST
scale: 40
resolved
944x001_border
944x500
CW WASH
944B101
944b104
944b106
944B200

V: SHERYL 05/27/04 5:26pm ---> V:\PROJECT\11900\11944\DWG\C944S009.DWG

STANDARD NOTES FOR EROSION CONTROL PLAN

1. The Contractor shall install and maintain BMP's as shown and perform all actions necessary to prevent erosion, and control sediment from leaving the construction site. Site Contractor shall comply with Clark County Code Chapter 40.380.050.

2. All erosion control measures shall be in-place and in working condition prior to disturbing and exposing any soil surfaces (i.e. silt fence, construction entrance, sedimentation barriers, sedimentation traps).

3. All erosion prevention and control BMP's shall be maintained and repaired as needed to insure continued performance of their intended function. Needed repairs shall be made as soon as practicable. They are to remain in place and operational during all phases of construction. Construction activities shall not continue or resume until repairs to erosion control facilities are made and the facilities are functional. Any sediment leaving the site or discharging to a sensitive area shall be stopped and controlled immediately. Contaminated areas shall be cleaned and restored.

4. Clearing limits and work area limits shall be delineated and marked. Do not disturb more area than needed for construction requirements.

5. All sensitive or critical areas (wetlands, steep slopes, natural waterways), and buffers shall all be clearly delineated and clearly marked, and protected from sediment deposition.

6. Sediment laden runoff shall be prevented from entering all existing storm water catch basins and inlets affected by construction.

7. No exposed, bare soils shall remain unstabilized for more than two days during the period October 1 thru April 30 or for more than seven days during the period of May 1 through September 30. All disturbed soil surfaces shall be stabilized by a suitable application of "Best Management Practices".

8. Where feasible, no more than 500 feet of trench shall be open at one time. Excavated material shall be placed on the up-hill side of trenches provided it does not conflict with safety requirements.

9. Dewatering devices shall discharge into a sediment trap or sediment pond. No discharge shall be made to a paved street or stormwater collection system without first removing sediment.

10. Cut and fill slopes shall be constructed in a manner that will minimize erosion. Erosion shall be controlled and prevented by such measures as roughening the surface, installation of interceptor ditches, terracing, covering with matting, mulch or plastic sheeting. Runoff shall be prevented from entering a slope and from undercutting the base of slopes.

11. Any soil or debris transported onto roadways and sidewalks shall be removed. Deposits shall be completely removed by shoveling and/or sweeping. Washing shall not be utilized unless specifically approved in writing by the County.

12. All permanent infiltration systems shall be isolated and protected from sediment laden runoff entering to avoid risk of reducing the ability of the systems to infiltrate. Isolation and protection shall not be removed until the drainage area tributary to the system is completely stabilized.

CONTINUED ON SHEET 2

DWG: ECN1.DWG — Department of Public Works, CLARK COUNTY WASHINGTON, proud past, promising future — STANDARD NOTES FOR EROSION CONTOL PLAN — APPROVED: COUNTY ENGINEER, 01/01/04 — STANDARD ECN1 — DESIGNED SCH, DRAWN SCH, DATE 08/02/02

STANDARD NOTES FOR EROSION CONTROL PLAN (CONTINUED)

13. All conveyance channels, both temporary and permanent shall be stabilized to prevent erosion of the channel. Stabilization shall extend to areas at outlets and downstream reaches vulnerable to erosion resulting from flow discharging from the channel.

14. If BMP's shown are utilized but are insufficient to prevent sediment from reaching water bodies, adjacent properties, or public rights-of-way; additional BMP's shall be implemented immediately to prevent further encroachment of sediment.

15. Stabilized areas shall be provided for employee parking and storage of construction materials. Erodeable stockpiles of earthen materials, such as topsoil, silty and clayey soils; and landscape materials, shall be covered when not being incorporated in the work. Erosion control BMP's shall be utilized as necessary to prevent sediment laden runoff from leaving or sediment being transported from these areas from vehicle activity.

16. All pollutants other than sediment that occur during construction shall be handled and disposed of in a manner that does not cause contamination of storm water.

17. The Contractor shall keep an inspection log of the condition of the erosion control facilities. Erosion control facilities shall be inspected at least weekly and after each rainfall. The inspection log shall be kept at the project site at a designated location and shall be available for review by the County. An individual that has successfully completed the County's Erosion Control Certification course shall perform inspections and maintain the log.

18. All temporary BMP's shall be removed within 30 days after final site stabilization is achieved. Trapped sediment shall be deposited and stabilized on site. Areas disturbed resulting from removal shall be permanently stabilized.

19. Construction shall not be considered complete and acceptable until all disturbed soil surfaces have been protected from erosion with permanent landscaping, covering with impervious surfaces, restored to original undisturbed condition or permanently stabilized.

20. Vegetated stabilization and landscaping shall be fertilized, watered and maintained to insure that growth of vegetation is established and sustained.

21. During dry weather construction periods the contractor shall provide project-specific dust control measures that may include: Seeding, Mulching, Matting, Water, Tackifier, or Chemical Soil Stabilizers. The contractor shall maintain the dust control measures through dry weather periods until all disturbed areas have been stabilized. Immediately re-stabilize areas disturbed by contractor's operations or other activities (wind, water, vandalism, etc.).

22. Entry onto the construction site shall be restricted to a single approved entrance as shown on the plan.

23. Maintenance and repair of heavy equipment and vehicles which involve potential contaminants (oil,solvents,hydraulic fluid, etc.) must be conducted in a manner which prevents contamination of soils, surface water and ground water. Tarps, drip pans, or other appropriate measures shall be used as necessary.

24. Stripping, topsoil, and unsuitable material stockpiles shall be hydroseeded with "regreen wheat x wheat grass hybrid" by Hobbs and Hobkins (or approved equal). Maintenance of stockpile areas and reapplication of hydroseed covering shall be required if bare soil is present. During winter and wet weather conditions, stockpiles shall be covered with plastic sheeting per detail E-16.

SHEET 2 OF 2

DWG: ECN.DWG — Department of Public Works, CLARK COUNTY WASHINGTON, proud past, promising future — STANDARD NOTES (CONTINUED) FOR EROSION CONTOL PLAN — APPROVED: COUNTY ENGINEER, 01/01/04 — STANDARD ECN2 — DESIGNED SCH, DRAWN SCH, DATE 07/22/03

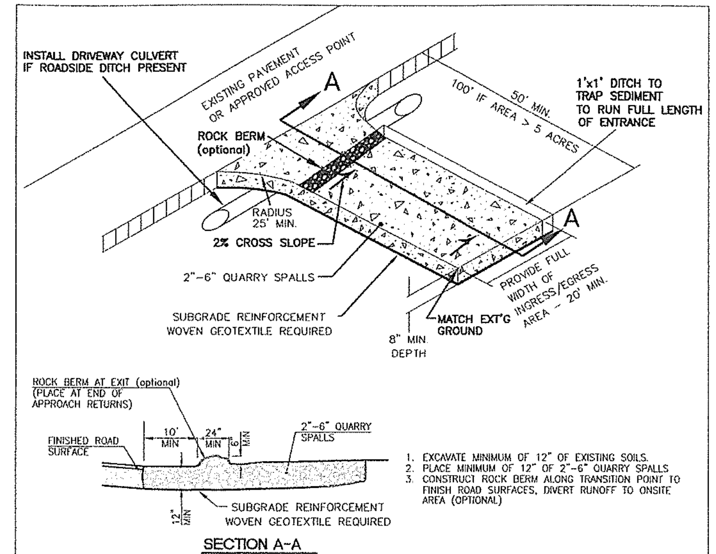

1. EXCAVATE MINIMUM OF 12" OF EXISTING SOILS.
2. PLACE MINIMUM OF 12" OF 2"-6" QUARRY SPALLS
3. CONSTRUCT ROCK BERM ALONG TRANSITION POINT TO FINISH ROAD SURFACES, DIVERT RUNOFF TO ONSITE AREA (OPTIONAL)

NOTES:

1. FOR DEVELOPMENT PROJECTS REVIEWED BY ENGINEERING SERVICES. NOT FOR USE WITH SINGLE FAMILY OR DUPLEX RESIDENTIAL BUILDING PERMITS. SEE BUILDING DEPT. FOR GRAVEL CONSTRUCTION ENTRANCE PLAN.
2. INSTALL WOVEN GEOTEXTILE FABRIC TO PREVENT SUB-SOIL PUMPING.
3. VEHICLE WASHDOWN AREA, IF REQUIRED, IS TO BE INSTALLED AND USED TO REMOVE SEDIMENT FROM VEHICLES THAT ARE ABOUT TO ENTER AN ESTABLISHED ROAD.
4. WASHDOWN AREA TO BE MADE UP OF CLEAN 2"- 6" QUARRY SPALLS, 1" DEEP (MIN) OVER WOVEN GEOTEXTILE FABRIC. WASHDOWN AREA TO BE FULL WIDTH OF ENTRANCE AND 50' (MIN.), AND 100' IF EXPOSED SOIL IS OVER 5 ACRES.
5. AT TIME OF PRECONSTRUCTION MEETING, THE COUNTY INSPECTOR MAY REQUIRE THE ENTRANCE TO BE PAVED TO THE EDGE OF THE RIGHT-OF-WAY PRIOR TO THE INSTALLATION OF A WASHDOWN ENTRANCE TO AVOID DAMAGE TO THE EXISTING ROADWAY.
6. THE RESPONSIBLE EROSION CONTROL INDIVIDUAL IS TO ENSURE THAT ALL VEHICLES USE THIS ENTRANCE AND ARE TO BE INSPECTED AND CLEANED OF SOILS BEFORE LEAVING PROJECT, AND THAT THE ENTRANCE IS TO BE KEPT CLEAN AT ALL TIMES.

DWG: E-1.DWG — Department of Public Works, CLARK COUNTY WASHINGTON, proud past, promising future — STANDARD CONSTRUCTION ENTRANCE — APPROVED: COUNTY ENGINEER, 01/01/04 — STANDARD E-1 — DESIGNED SCH, DRAWN SCH, DATE 07/07/03

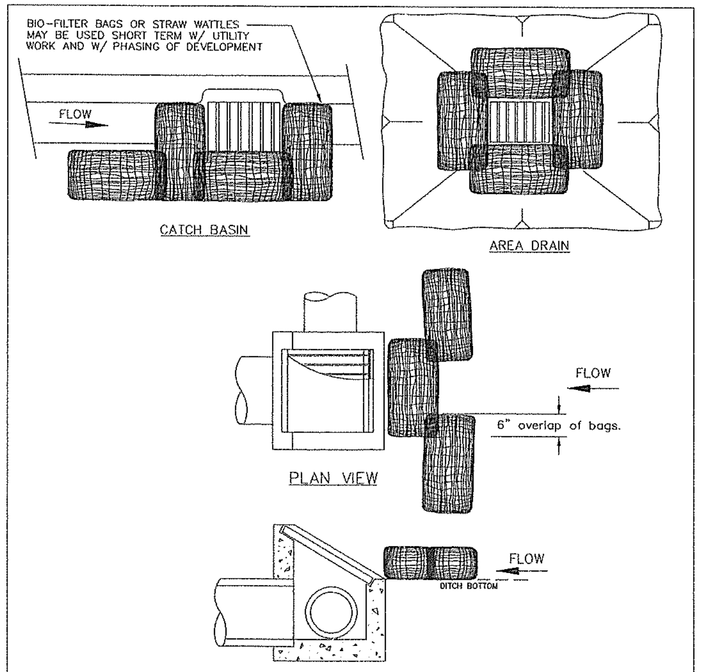

NOTES:

1. ADDITIONAL MEASURES MUST BE CONSIDERED DEPENDING ON SOIL TYPE.
2. BIO-FILTER BAGS SHOULD BE STAKED WHERE APPLICABLE USING (2) 1"x2" WOODEN STAKES OR APPROVED EQUAL PER BAG.
3. STRAW WATTLES MUST BE STABILIZED BY ATTACHING WIRE CLIPS TO THE CATCH BASIN PER MANUFACTURES SPECIFICATIONS.
4. INLET PROTECTION MUST BE REGULARLY INSPECTED BY THE EROSION CONTROL INDIVIDUAL TO INSURE PROPER PLACEMENT/FUNCTION AND MAINTENANCE.
5. SEE INLET PROTECTION NOTES STD. PLAN E-3

DWG: E-3c.DWG — Department of Public Works, CLARK COUNTY WASHINGTON, proud past, promising future — INLET PROTECTION TYPE 4 BIOFILTER BAGS — APPROVED: COUNTY ENGINEER, 01/01/04 — STANDARD E-3c — DESIGNED SCH, DRAWN SCH, DATE 08/07/02

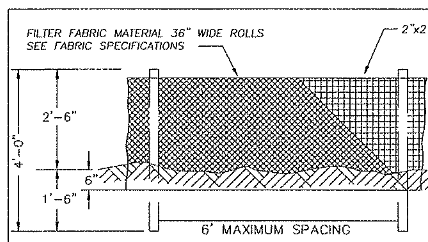

FRONT VIEW
NTS

SEDIMENT FENCE FABRIC SPECIFICATIONS
(Woven Polyproylene sediment fence fabric)

PROPERTY	TEST PROCEDURE	MIN. FABRIC VALUE
Grab Tensile Strength	ASTM D-4632	180 lbs.
Grab elongation	ASTM D-4632	15%
trapezoid Tear	ASTM D-4533	70 lbs.
Mullen Burst	ASTM D-3786	300 psi.
Puncture	ASTM D-4833	80 lbs.
Permitivity	ASTM D-4491	0.07 sec-1
Permeability	ASTM D-4491	.005 cm/sec
A.O.S.	ASTM D-4751	50 U.S. Sieve
UV Resistance(500 hrs)	ASTM D-4355	90%

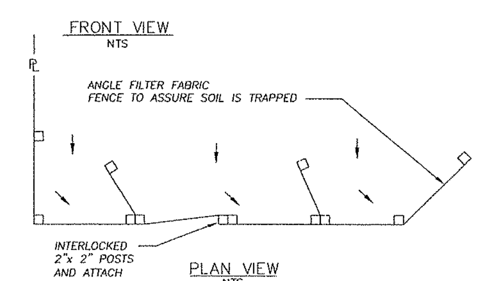

PLAN VIEW
NTS

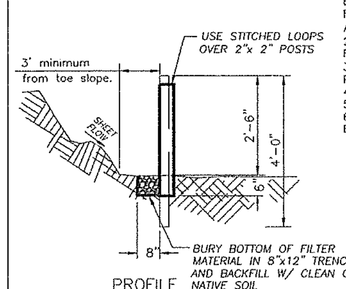

PROFILE
NTS

NOTES

1. THIS SEDIMENT BARRIER UTILIZES STANDARD STRENGTH OR EXTRA STRENGTH SYNTHETIC FILTER FABRICS, IT IS DESIGNED FOR SITUATIONS IN WHICH ONLY SHEET OR OVERLAND FLOWS ARE EXPECTED. (SEE FABRIC SPECIFICATIONS ABOVE)
2. BURY BOTTOM OF FILTER FABRIC 6" VERTICALLY BELOW FINISHED GRADE.
3. POST ARE TO BE 2"x2" FIR, PINE OR STEEL FENCE POSTS.
4. POST TO BE INSTALLED ON UPHILL SIDE OF SLOPE.
5. COMPACT BOTH SIDES OF FILTER FABRIC TRENCH.
6. SEDIMENT FENCE TO BE SPACED ON SLOPES PER TABLE BELOW.

INSTALL PARALLEL ALONG CONTOURS AS FOLLOWS		
% SLOPE	SLOPE	MAX. SPACING ON SLOPE
10% FLATTER	10:1 OR FLATTER	300 ft.
10>%<15	10:1>x<7.5:1	150 ft.
15>%<20	7.5:1>x<5:1	100 ft.
20>%<30	5:1>x<3.5:1	50 ft.
30>%<50	3.5:1>x<2:1	25 ft.

DWG: E-4.DWG — Department of Public Works, CLARK COUNTY WASHINGTON, proud past, promising future — STANDARD SEDIMENT FENCE — APPROVED: COUNTY ENGINEER, 01/01/04 — STANDARD E-4 — DESIGNED SCH, DRAWN SCH, DATE 07/07/03

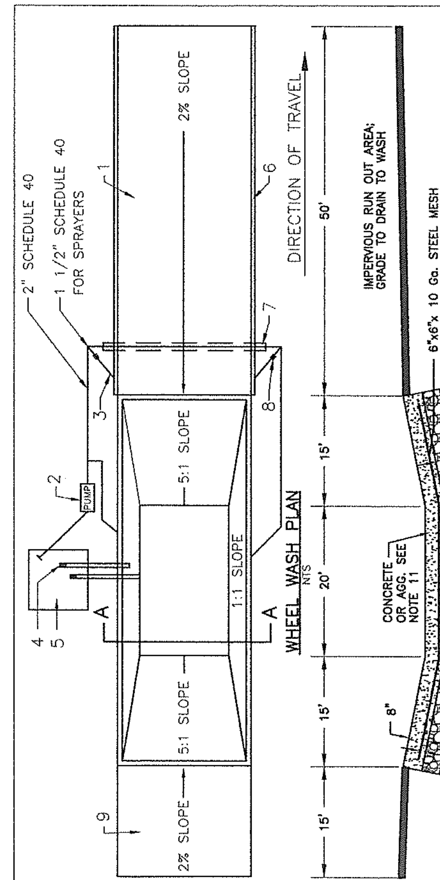

NOTES

1. ASPHALT CONSTRUCTION ENTRANCE, 6" OF ATB.
2. 3" TRASH PUMP WITH FLOATS ON SUCTION HOSE.
3. MIDPOINT SPRAY NOZZLES, IF NEEDED.
4. 6" SEWER PIPE WITH BUTTERFLY VALVES. BOTTOM PIPE IS A DRAIN. LOCATE TOP PIPE'S INVERT 1' ABOVE BOTTOM OF WHEEL WASH.
5. 8'x 8' SUMP WITH 5' OF CATCHMENT. BUILD WITH ABILITY TO CLEAN WITH BACKHOE.
6. ASPHALT CURB ON THE LOW ROAD SIDE TO DIRECT WATER BACK TO POND.
7. 6" SLEEVE UNDER ROAD.
8. BALL VALVES.
9. ATB APRON TO PROTECT FROM SPLASHING WATER.
10. CONTRACTOR TO REMOVE ACCUMULATED SEDIMENT FROM WHEEL WASH; MAY BE PIPED TO AN APPROVED SEDIMENT TRAP.
11. USE GEOTEXTILE FABRIC WITH AGGREGATE FOR A TEMPORARY WHEEL WASH.

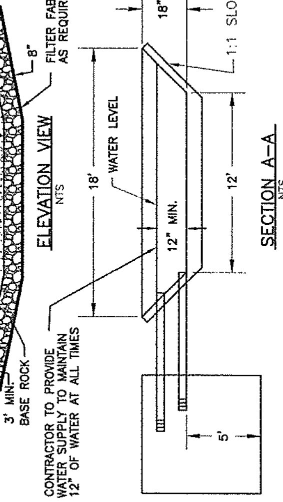

SECTION A-A
NTS

DWG: E-15 — Department of Public Works, CLARK COUNTY WASHINGTON, proud past, promising future — WHEEL WASH — APPROVED: COUNTY ENGINEER, 01/01/04 — STANDARD E-15 — DESIGNED SCH, DRAWN SCH, DATE 06/12/02

NOT FOR CONSTRUCTION

CLARK COUNTY WASHINGTON — proud past, promising future

DESIGN & ENGINEERING DIVISION
NE 63RD STREET IMPROVEMENTS

EROSION CONTROL DETAILS AND NOTES

otak Incorporated
700 Washington St., Suite 401
Vancouver, WA 98660
Phone: (360) 737-9613
FAX: (360) 737-9651

CALL 48 HOURS BEFORE YOU DIG
1-800-424-5555
"It's the Law"
NORTHWEST UTILITIES NOTIFICATION CENTER

DESIGNED:	PKW
DRAWN:	GME
CRP:	330422
HORIZ.	NA
VERT.	NA
DATE:	5/28/2004
DWG:	EC4
SHEET	10 OF 63

REF_LIST
scale: 5
resolved
944x001_border
KW WASH

V: SHERYL 05/27/04 4:53pm ---> V:\PROJECT\11900\11944\DWG\C944S011.DWG

OPEN CUT UTILITY TRENCH BACKFILL DETAIL (COLLECTOR OR ARTERIAL)

SURFACING:

1. All A.C.P. shall be saw cut to provide a straight, clean edge prior to paving.
2. The cut line shall be one continuous straight line from the outer excavation limits of manhole, valve box, etc. to manhole, valve box, etc.
3. Pave with an 0.5 ft. minimum compacted depth A.C.P., or match existing or design section, whichever is greater.
4. Lifts for A.C.P. (Class A) shall be 0.15 ft. minimum and 0.35 ft. maximum for non-surface lifts (0.25' maximum for surface lift); the temperature shall be 250 degree minimum, 350 degree maximum, compacted to 92% of the theoretical maximum.
5. All joints shall be tacked, sealed and sanded.
6. Trench shall be plated until paved.
7. For longitudinal installation, full lane width including turn lanes restoration shall be required or as directed by Clark County. For transverse installation refer to surfacing restoration of detail U6. See Section 12.20A.120.C.

BASE COURSE:

1. 0.80 ft. minimum depth (1-1/4" minus) C.S.B.C. (W.S.D.O.T. approved material).
2. Compacted to 95% of maximum density. See trench zone.
3. Equivalent depth of A.T.B. may be substituted.
4. For transverse or diagonal trenches in existing roadway pavement, CDF will be used from the bottom of full pavement section to a maximum CDF section of 3 feet or to 6" above the top of the pipe, which ever is less. See note 13 of Std. Plan UGN of this Manual.

TRENCH ZONE:

1. Granular backfill as approved by local agency or W.S.D.O.T. specifications for granular backfill. Compacted to 95% of maximum density in the trench zone using Method C compaction as per Section 2-03.3(14)C.
2. Native material may be used if approved prior to construction by Clark County.
3. Trench zone width --- see below.

PIPE ZONE:

1. Pipe zone material as specified by utility owner, and shall conform to section 9-03.12(3) WSDOT Specs.
2. 1.0 ft. max. from top of the pipe. 6" from top of pipe when CDF backfill used.

CONDITIONS:

1. A copy of the permit and requirements shall be on the job site at all times.
2. The permit holder shall be responsible for all restoration and maintenance of ditches, shoulders, driveways, landscaping, etc.
3. Call Clark County at 397-2446 twenty-four hours prior to commencing work.

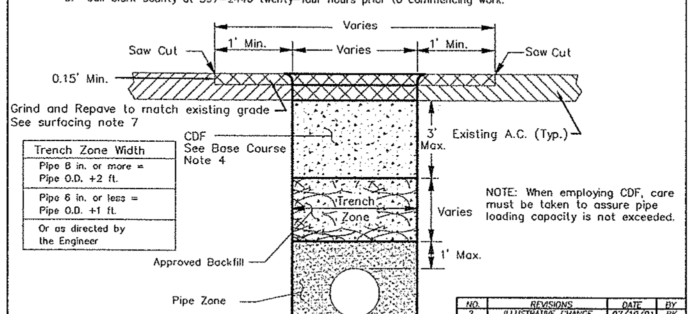

Trench Zone Width
Pipe 8 in. or more = Pipe O.D. +2 ft.
Pipe 6 in. or less = Pipe O.D. +1 ft.
Or as directed by the Engineer

NO.	REVISIONS	DATE	BY
2	ILLUSTRATIVE CHANGE	07/20/01	SCH
3	Notes: 6 Del., Rev. 7	12/07/02	SCH

Department of Public Works — CLARK COUNTY WASHINGTON — proud past, promising future
OPEN CUT UTILITY TRENCH BACKFILL DETAIL COLLECTOR OR ARTERIAL ROADWAY — APPROVED — COUNTY ENGINEER — 7/20/01 — STANDARD U1

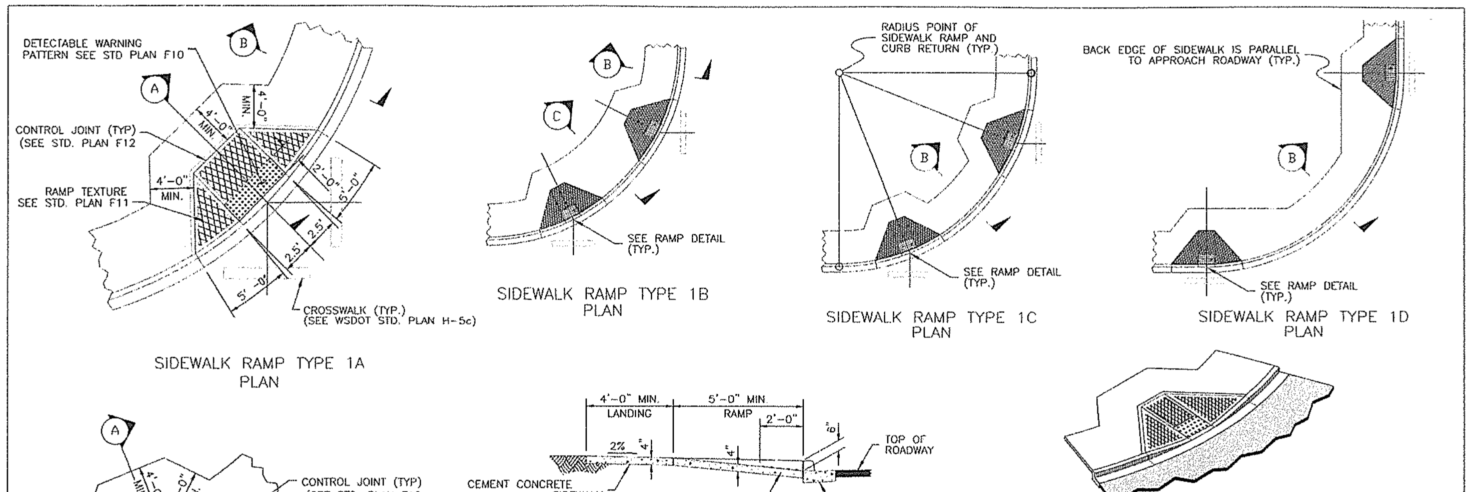

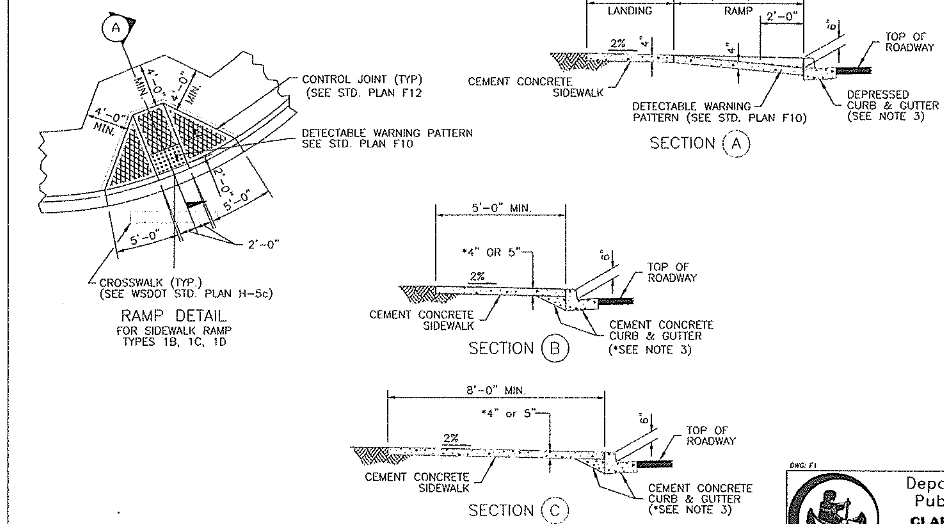

NOTES

1. Avoid placing drainage structures, junction boxes or other obstructions in front of ramp access areas.
2. Detectable warning patterns may be created by any method that will achieve the truncated dome dimensions and spacing shown.
3. Curb and gutter shown, see Construction Plans for the curb design specified. See Std. Plan F18 for standard curb details, and std. plan F18b for rolled curb & gutter with THICKENED SIDEWALK.
4. The plan views for SIDEWALK RAMP TYPES 1B, 1C & 1D are provided to define each ramp type. See the RAMP DETAIL on this sheet. See Std. Plan F12 for sidewalk joint placement and details.
5. Ramp slopes shall not be steeper than 12H:1V.
6. For Arterials and Collectors use WSDOT Standard Plan F-3a.

Department of Public Works — CLARK COUNTY WASHINGTON — proud past, promising future
SIDEWALK RAMP TYPES 1A, 1B, 1C & 1D — APPROVED — COUNTY ENGINEER — 01/01/04 — STANDARD F1

NOTES:

1. EXISTING CURB, GUTTER, AND SIDEWALK TO BE SAWCUT AND REMOVED FOR INSTALLATION OF NEW RAMP.
2. RAMPS TO BE POURED SEPARATELY FROM SIDEWALK.
3. RAMP SLOPES SHALL NOT BE STEEPER THAN 12H:1V.

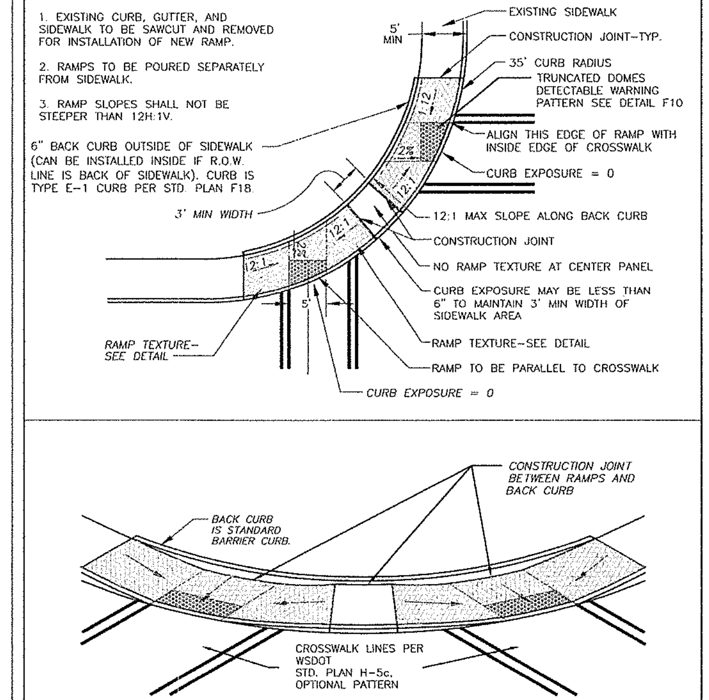

THIS TYPE OF RAMP IS ONLY TO BE USED IN EXISTING RESTRICTED RIGHT-OF-WAY AREAS, DOUBLE RAMP SHOWN-SINGLE RAMP MAY BE USED AT SOME INSTALLATIONS.

Department of Public Works — CLARK COUNTY WASHINGTON
TYPE 2 ALTERNATE RAMP - DOUBLE — APPROVED — COUNTY ENGINEER — 8/22/00 — F2b

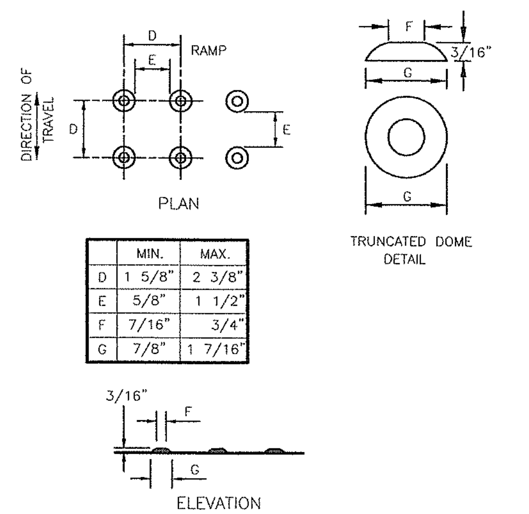

	MIN.	MAX.
D	1 5/8"	2 3/8"
E	5/8"	1 1/2"
F	7/16"	3/4"
G	7/8"	1 7/16"

TRUNCATED DOMES (SEE NOTE 2)
DETECTABLE WARNING
PATTERN DETAIL

NOTES

1. AVOID PLACING DRAINAGE STRUCTURES, JUNCTION BOXES OR OTHER OBSTRUCTIONS IN FRONT OF RAMP ACCESS AREA.
2. THE DETECTABLE WARNING PATTERNS CAN BE CREATED BY ACCEPTABLE MEANS THAT WILL ACHIEVE THE TRUNCATED DOME DIMENSIONS AND SPACING SHOWN.
3. PLACE TRUNCATED DOME DETECTABLE WARNING TEXTURE IN THE LOWER 24" OF THE THROAT OF THE RAMP ONLY. ARRANGE DOMES USING IN-LINE PATTERN ONLY AS SHOWN. COLOR OF TEXTURE (COATING) SHALL BE SAFETY YELLOW IN COMPLIANCE WITH WSDOT STD. SPEC. OR AS INSTRUCTED BY COUNTY INSPECTOR.
4. FOR CONSTRUCTION OF SIDEWALK RAMPS OUTSIDE OF PUBLIC RIGHT-OF-WAY, CHECK WITH STATE BUILDING CODES.

Department of Public Works — CLARK COUNTY WASHINGTON — proud past, promising future
TRUNCATED DOME DETECTABLE WARNING PATTERN — APPROVED — COUNTY ENGINEER — 01/01/04 — STANDARD F10

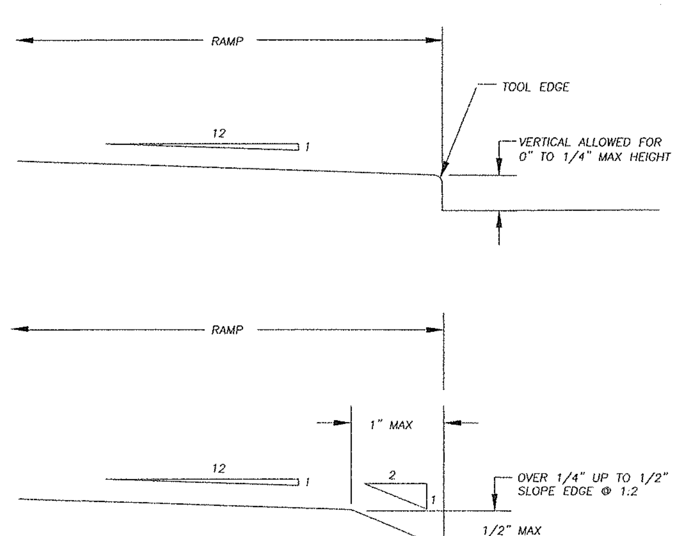

CHANGES UP TO 1/4" MAY BE VERTICAL AND WITHOUT EDGE TREATMENT. CHANGES IN LEVEL GREATER THAN 1/4" UP TO 1/2" SHALL HAVE THE WHOLE VERTICAL CHANGE BEVELED WITH A SLOPE NO GREATER THAN 2:1.

JOINT SPACING:
SURFACE JOINTS - 5'
CONTROL JOINTS - 15'
EXPANSION JOINTS AT, STRUCTURES, OBSTRUCTIONS, OR AS DIRECTED BY THE INSPECTOR.

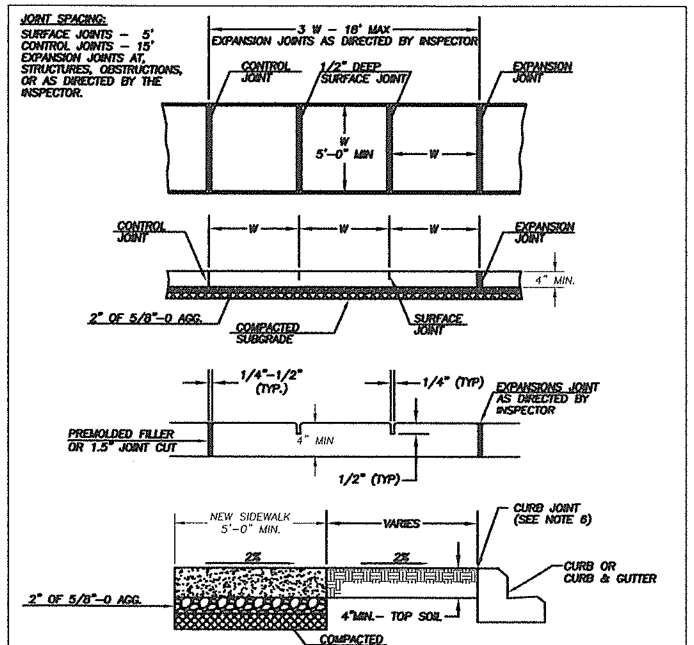

NOTES:

1. **CONCRETE SHALL BE 3,000 PSI MIN. (CLASS 3000), 3 1/2" SLUMP (± 1")**
2. **FINISH SHALL BE MEDIUM BROOM PERPENDICULAR TO PEDESTRIAN TRAFFIC UNLESS OTHERWISE DIRECTED.**
3. **ALL EXISTING EDGES SHALL BE SAWCUT.**
4. **NO FILLER REQUIRED FOR SURFACE JOINTS.**
5. **ALL JOINTS AND EDGES SHALL BE FINISHED WITH 1/4" RADIUS EDGER (3" SMOOTH EACH SIDE)**
6. **FOR SIDEWALKS ADJACENT TO THE CURB AND POURED AT THE SAME TIME AS THE CURB, THE JOINT BETWEEN THEM SHALL BE A TROWELED JOINT WITH A MIN. 1/2" RADIUS.**

Department of Public Works — CLARK COUNTY WASHINGTON — proud past, promising future
SIDEWALK DETAIL — APPROVED — COUNTY ENGINEER — 01/01/04 — STANDARD F12

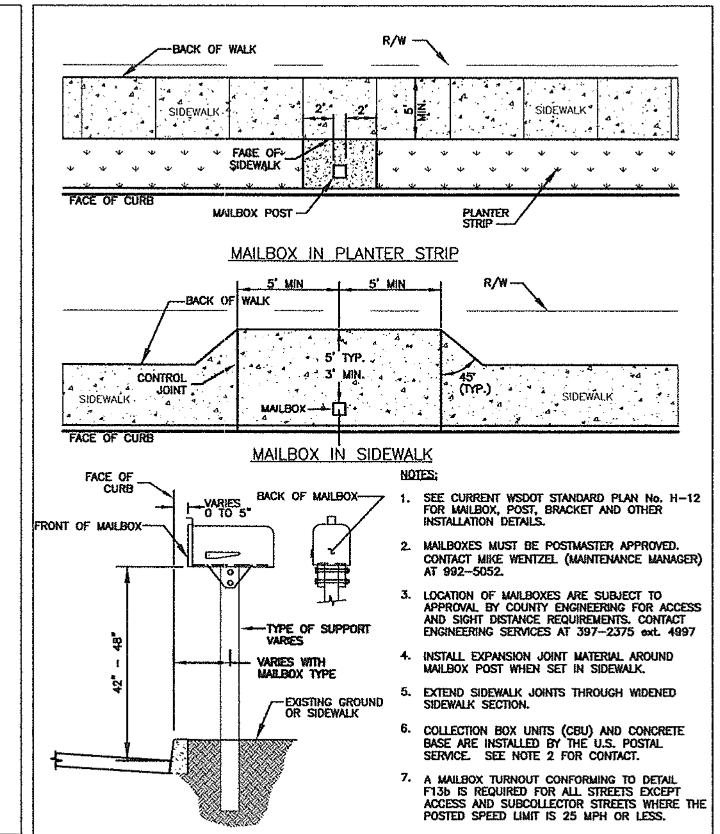

NOTES:

1. SEE CURRENT WSDOT STANDARD PLAN No. H-12 FOR MAILBOX, POST, BRACKET AND OTHER INSTALLATION DETAILS.
2. MAILBOXES MUST BE POSTMASTER APPROVED. CONTACT MIKE WENTZEL (MAINTENANCE MANAGER) AT 992-5052.
3. LOCATION OF MAILBOXES ARE SUBJECT TO APPROVAL BY COUNTY ENGINEERING FOR ACCESS AND SIGHT DISTANCE REQUIREMENTS. CONTACT ENGINEERING SERVICES AT 397-2375 ext. 4997
4. INSTALL EXPANSION JOINT MATERIAL AROUND MAILBOX POST WHEN SET IN SIDEWALK.
5. EXTEND SIDEWALK JOINTS THROUGH WIDENED SIDEWALK SECTION.
6. COLLECTION BOX UNITS (CBU) AND CONCRETE BASE ARE INSTALLED BY THE U.S. POSTAL SERVICE. SEE NOTE 2 FOR CONTACT.
7. A MAILBOX TURNOUT CONFORMING TO DETAIL F13b IS REQUIRED FOR ALL STREETS EXCEPT ACCESS AND SUBCOLLECTOR STREETS WHERE THE POSTED SPEED LIMIT IS 25 MPH OR LESS.

WSDOT STD. PLANS WEB SITE ADDRESS:
http://www.wsdot.wa.gov/eesc/design/designstandards/HTM/TOC.pdf

Department of Public Works — CLARK COUNTY WASHINGTON — proud past, promising future
SIDEWALK MAILBOX PLACEMENT — APPROVED — COUNTY ENGINEER — 01/01/04 — STANDARD F13

NOT FOR CONSTRUCTION

CLARK COUNTY WASHINGTON — proud past, promising future

DESIGN & ENGINEERING DIVISION
NE 63RD STREET IMPROVEMENTS
ROADWAY DETAILS

otak Incorporated
700 Washington St., Suite 401
Vancouver, WA 98660
Phone: (360) 737-9613
FAX: (360) 737-9651

CALL 48 HOURS BEFORE YOU DIG
1-800-424-5555
"It's the Law"
NORTHWEST UTILITIES NOTIFICATION CENTER

DESIGNED:	SLW
DRAWN:	GME
CRP:	330422
HORIZ.	NA
VERT.	NA
DATE:	5/28/2004
DWG:	D01
SHEET	11 OF 63

REF LIST
scale: 96
ssolved
944x001_border
KW WASH

NOTES:
1. A MINIMUM 3' WIDE ACCESSIBLE ROUTE SHALL BE MAINTAINED IN ALL PEDESTRIAN ACCESSIBLE AREAS.
2. CONTRACTION POINTS SHALL BE PLACED ALONG SIDEWALKS IN ACCORD WITH SIDEWALK DETAIL. ALL JOINTS SHALL BE CLEANED AND EDGED.
3. CHANGES IN LEVEL UP TO 1/4" MAY BE VERTICAL AND WITHOUT EDGE TREATMENT. CHANGES IN LEVEL BETWEEN 1/4" AND 1/2" SHALL BE BEVELED WITH A SLOPE NO GREATER THAN 2:1.
4. CEMENT CONCRETE APPROACHES SHALL BE CONSTRUCTED OF AIR-ENTRAINED CLASS 3000 AND MAY BE POURED INTEGRAL WITH CURB.
5. EXISTING CURB, GUTTER, AND SIDEWALK TO BE SAWCUT AND REMOVED FOR INSTALLATION OF APPROACH.
6. COMMERCIAL DRIVEWAY REQUIRES REINFORCING STEEL (6"x6" 10 GA WIRE MESH) MIN. 3" COVER.
7. 3" DEPTH 3/4"-0 CRUSHED AGGREGATE BASE COMPACTED TO 95% OF MAX. DRY DENSITY.
8. SUBGRADE PREPARATION PER WSDOT STD. SPEC. 2-06.3(1).

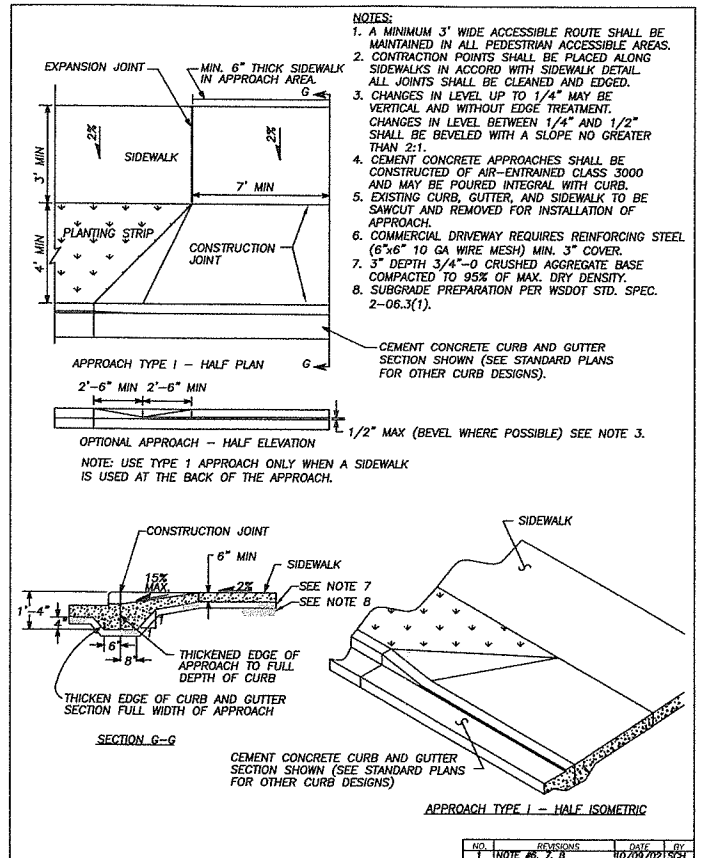

NO.	REVISIONS	DATE	BY
1	NOTE #6, 7, 8	10/09/02	SCH

DWG: F14.dwg

Department of Public Works
CLARK COUNTY WASHINGTON
DETAIL – TYPE 1
CEMENT CONCRETE APPROACH
APPROVED
PETER CAPELLI, COUNTY ENGINEER — 8/22/00 DATE
F14
DESIGNED DB DRAWN KB DATE 7/24/00

NOTES:
1. A MINIMUM 3' WIDE ACCESSIBLE ROUTE SHALL BE MAINTAINED IN ALL PEDESTRIAN ACCESSIBLE AREAS.
2. CONTRACTION JOINTS SHALL BE PLACED ALONG SIDEWALKS IN ACCORD WITH SIDEWALK DETAIL. ALL JOINTS SHALL BE CLEANED AND EDGED.
3. CHANGES IN LEVEL UP TO 1/4" MAY BE VERTICAL AND WITHOUT EDGE TREATMENT. CHANGES IN LEVEL BETWEEN 1/4" AND 1/2" SHALL BE BEVELED WITH A SLOPE NO GREATER THAN 2:1.
4. CEMENT CONCRETE APPROACHES SHALL BE CONSTRUCTED OF AIR-ENTRAINED CONCRETE CLASS 3000 AND MAY BE POURED INTEGRAL WITH CURB.
5. EXISTING CURB, GUTTER AND SIDEWALK TO BE SAWCUT AND REMOVED FOR INSTALLATION OF APPROACH.
6. COMMERCIAL DRIVEWAY REQUIRES REINFORCING STEEL (6"x6" 10 GA WIRE MESH) MIN. 3" COVER
7. 3" DEPTH 3/4"-0 CRUSHED AGGREGATE BASE COMPACTED TO 95% OF MAX. DRY DENSITY.
8. SUBGRADE PREPARATION PER WSDOT STD. SPEC. 2-06.3(1).

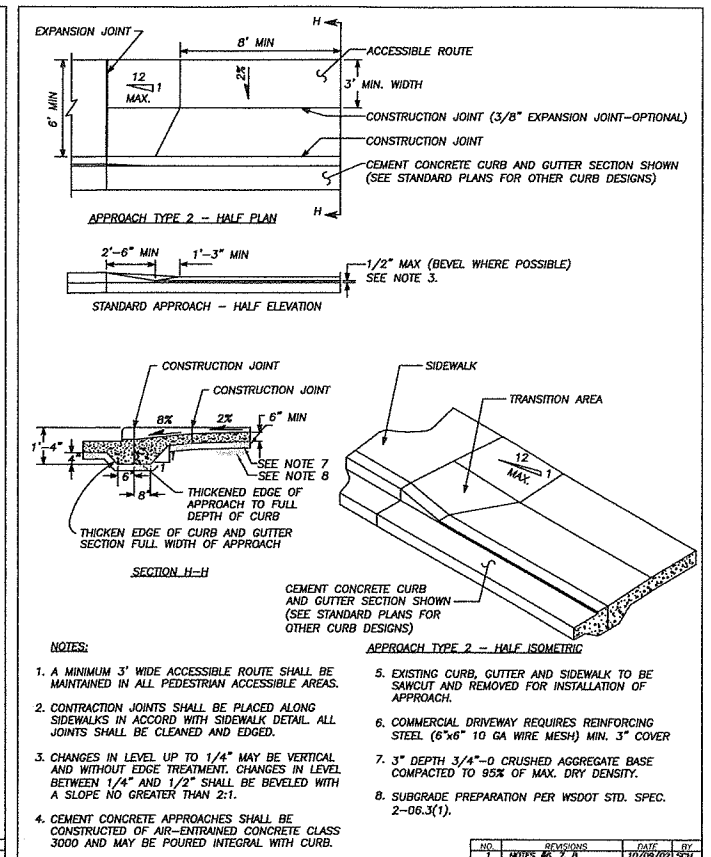

NO.	REVISIONS	DATE	BY
1	NOTES #6, 7, 8	10/09/02	SCH

DWG: F15.DWG

Department of Public Works
CLARK COUNTY WASHINGTON
CEMENT CONCRETE APPROACH
DETAIL – TYPE 2
APPROVED
PETER CAPELLI, COUNTY ENGINEER — 8/22/00 DATE
F15
DESIGNED DB DRAWN KB DATE 7/24/00

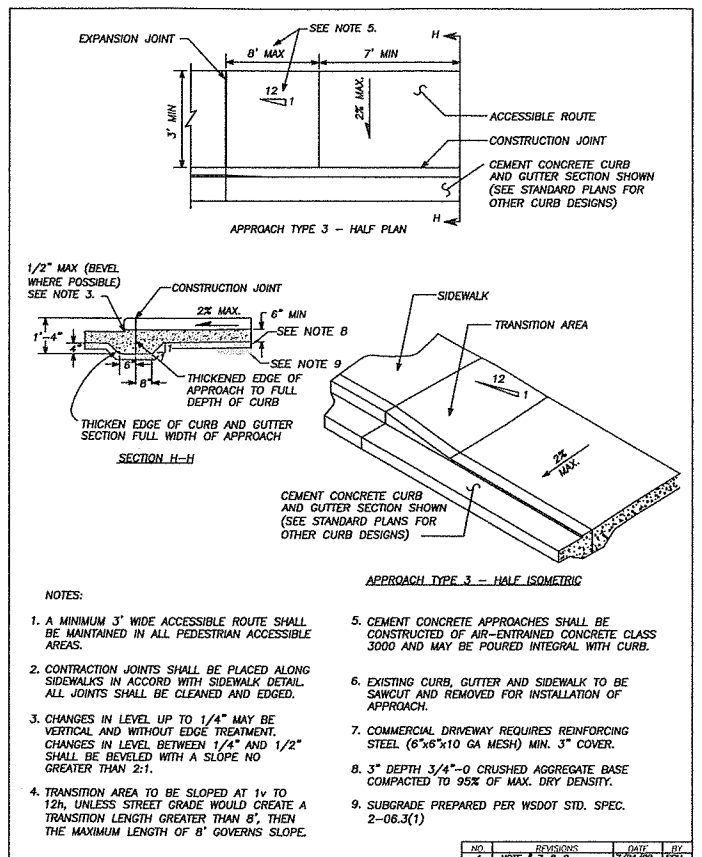

NOTES:
1. A MINIMUM 3' WIDE ACCESSIBLE ROUTE SHALL BE MAINTAINED IN ALL PEDESTRIAN ACCESSIBLE AREAS.
2. CONTRACTION JOINTS SHALL BE PLACED ALONG SIDEWALKS IN ACCORD WITH SIDEWALK DETAIL. ALL JOINTS SHALL BE CLEANED AND EDGED.
3. CHANGES IN LEVEL UP TO 1/4" MAY BE VERTICAL AND WITHOUT EDGE TREATMENT. CHANGES IN LEVEL BETWEEN 1/4" AND 1/2" SHALL BE BEVELED WITH A SLOPE NO GREATER THAN 2:1.
4. TRANSITION AREA TO BE SLOPED AT 1v TO 12h, UNLESS STREET GRADE WOULD CREATE A TRANSITION LENGTH GREATER THAN 8', THEN THE MAXIMUM LENGTH OF 8' GOVERNS SLOPE.
5. CEMENT CONCRETE APPROACHES SHALL BE CONSTRUCTED OF AIR-ENTRAINED CONCRETE CLASS 3000 AND MAY BE POURED INTEGRAL WITH CURB.
6. EXISTING CURB, GUTTER AND SIDEWALK TO BE SAWCUT AND REMOVED FOR INSTALLATION OF APPROACH.
7. COMMERCIAL DRIVEWAY REQUIRES REINFORCING STEEL (6"x6"x10 GA MESH) MIN. 3" COVER.
8. 3" DEPTH 3/4"-0 CRUSHED AGGREGATE BASE COMPACTED TO 95% OF MAX. DRY DENSITY.
9. SUBGRADE PREPARED PER WSDOT STD. SPEC. 2-06.3(1)

NO.	REVISIONS	DATE	BY
1	NOTE # 7, 8, 9	7/24/02	SCH

DWG: F16.dwg

Department of Public Works
CLARK COUNTY WASHINGTON
CEMENT CONCRETE APPROACH
DETAIL – TYPE 3
APPROVED
PETER CAPELLI, COUNTY ENGINEER — 8/22/00 DATE
F16
DESIGNED DB DRAWN KB DATE 7/24/00

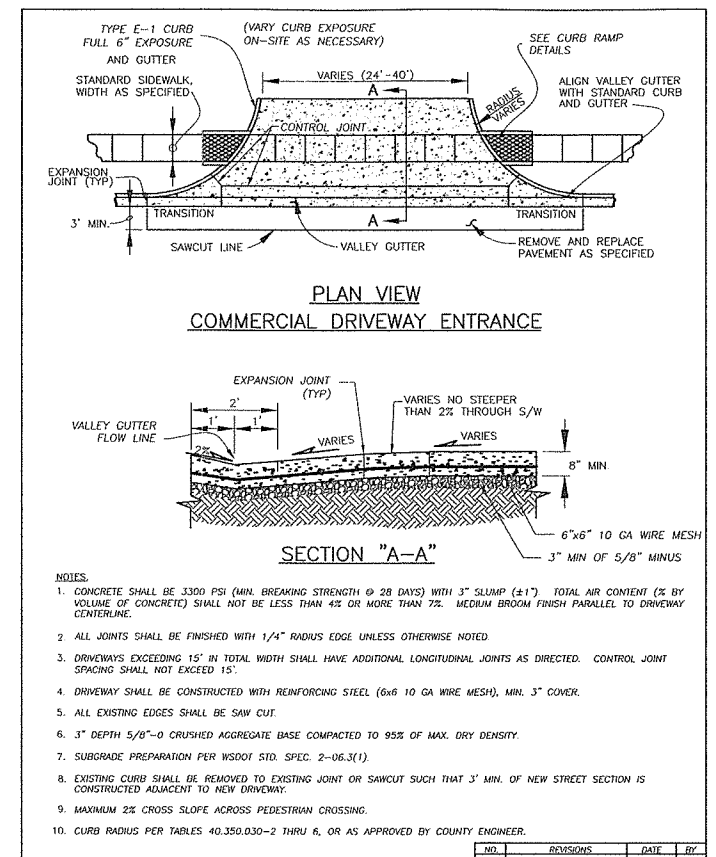

NOTES:
1. CONCRETE SHALL BE 3300 PSI (MIN. BREAKING STRENGTH @ 28 DAYS) WITH 3" SLUMP (±1") TOTAL AIR CONTENT (% BY VOLUME OF CONCRETE) SHALL NOT BE LESS THAN 4% OR MORE THAN 7%. MEDIUM BROOM FINISH PARALLEL TO DRIVEWAY CENTERLINE.
2. ALL JOINTS SHALL BE FINISHED WITH 1/4" RADIUS EDGE UNLESS OTHERWISE NOTED.
3. DRIVEWAYS EXCEEDING 15' IN TOTAL WIDTH SHALL HAVE ADDITIONAL LONGITUDINAL JOINTS AS DIRECTED. CONTROL JOINT SPACING SHALL NOT EXCEED 15'.
4. DRIVEWAY SHALL BE CONSTRUCTED WITH REINFORCING STEEL (6x6 10 GA WIRE MESH), MIN. 3" COVER.
5. ALL EXISTING EDGES SHALL BE SAW CUT.
6. 3" DEPTH 5/8"-0 CRUSHED AGGREGATE BASE COMPACTED TO 95% OF MAX. DRY DENSITY.
7. SUBGRADE PREPARATION PER WSDOT STD. SPEC. 2-06.3(1).
8. EXISTING CURB SHALL BE REMOVED TO EXISTING JOINT OR SAWCUT SUCH THAT 3' MIN. OF NEW STREET SECTION IS CONSTRUCTED ADJACENT TO NEW DRIVEWAY.
9. MAXIMUM 2% CROSS SLOPE ACROSS PEDESTRIAN CROSSING.
10. CURB RADIUS PER TABLES 40.350.030-2 THRU 6, OR AS APPROVED BY COUNTY ENGINEER.

NO.	REVISIONS	DATE	BY

DWG: F17.DWG

Department of Public Works
CLARK COUNTY WASHINGTON
proud past, promising future
MAJOR COMMERCIAL CONCRETE APPROACH
APPROVED
PETER CAPELLI, COUNTY ENGINEER — 01/01/04 DATE
F17
DESIGNED SCH DRAWN SCH DATE 10/18/03

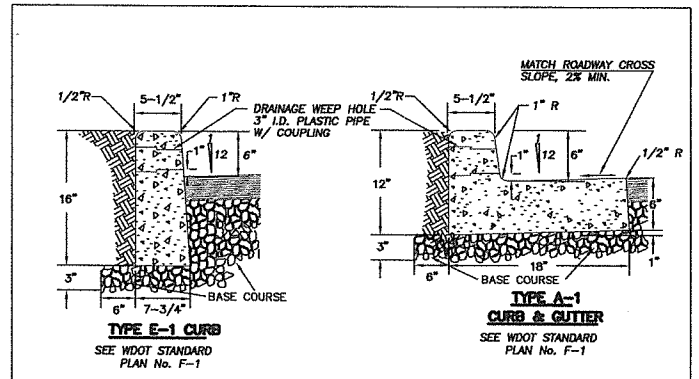

NOTES
1. CONCRETE SHALL BE 3000 PSI MIN. (CLASS 3000) 3 1/2" SLUMP (MAX.)
2. CURBS ADJACENT TO PAVEMENT OR SIDEWALK TO HAVE EXPANSION AND/OR CONTRACTION JOINTS TO MATCH EXISTING PATTERNS.
3. 3/8" EXPANSION JOINTS TO BE PROVIDED AT EACH POINT OF TANGENCY OF THE CURB, COLD JOINTS, EACH SIDE OF INLET STRUCTURES AND DRIVEWAYS. MATERIAL TO BE PRE-MOLDED, ASPHALT IMPREGNATED AND NON EXTRUDING.
4. CONTRACTION JOINT SPACING NOT TO EXCEED 15 FEET. THE DEPTH OF THE JOINT SHALL BE AT LEAST 1-1/2 INCHES. WEEP HOLES TO BE CENTERED WITH CONTRACTION JOINTS.
5. BASE COURSE SHALL BE TO SUBGRADE OF STREET SECTION OR 3 INCHES, WHICHEVER IS GREATER, AND SHALL EXTEND 6" BEHIND THE CURB.
6. DRAINAGE WEEP HOLES TO BE 3" I.D. PLASTIC PIPE WITH COUPLING. FINISH PIPE END FLUSH WITH FACE OF CURB.
7. GROUT ANY VOIDS IN CONCRETE SURROUNDING PIPE.
8. DRAINAGE ACCESS THROUGH EXISTING CURBS SHALL BE CORE DRILLED.
9. CURB TO BE BRUSH FINISHED. ALL EXISTING EDGES SHALL BE SAWCUT.
10. ALL MATERIALS AND WORKMANSHIP FOR TYPE E-1 & A-1 SHALL BE IN ACCORDANCE WITH WDOT STANDARD PLAN No. F-1, APPROVED 7/18/97 OR MOST CURRENT REVISION.

NO.	REVISIONS	DATE	BY

DWG: F18.DWG

Department of Public Works
CLARK COUNTY WASHINGTON
proud past, promising future
CONCRETE CURBS
APPROVED
PETER CAPELLI, COUNTY ENGINEER — 01/01/04 DATE
STANDARD PLAN No. F18
DESIGNED SCH DRAWN SCH DATE 07/24/03

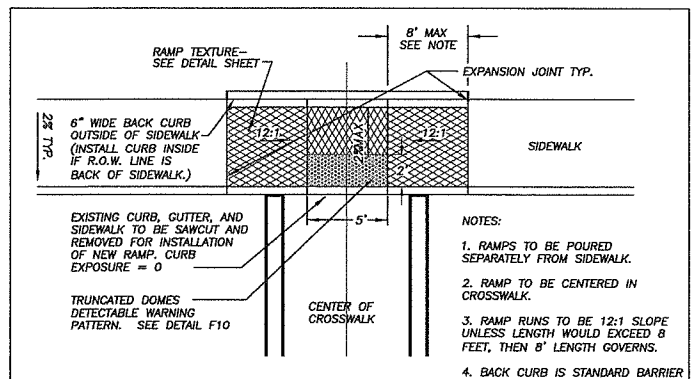

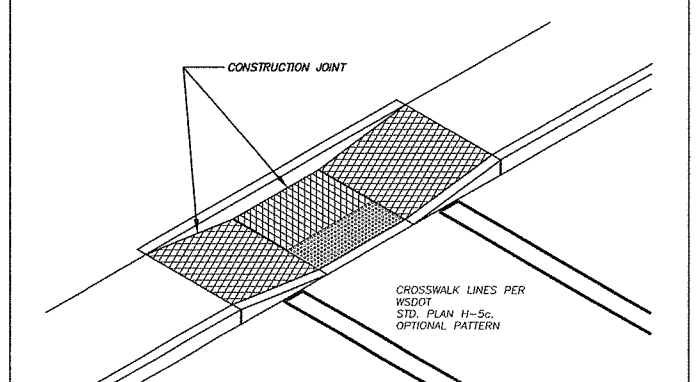

NO.	REVISIONS	DATE	BY
1	TRUNCATED DOME PATTERN	8/15/03	SCH

DWG: F3.dwg

Department of Public Works
CLARK COUNTY WASHINGTON
TYPE 3 RAMP
APPROVED
PETER CAPELLI, COUNTY ENGINEER — 8/22/00 DATE
F3
DESIGNED DB DRAWN KB DATE 7/24/00

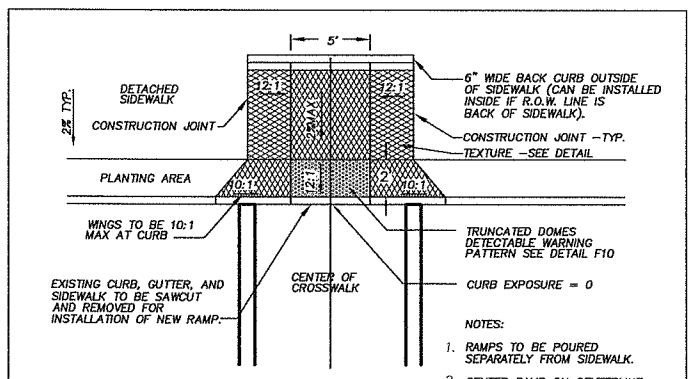

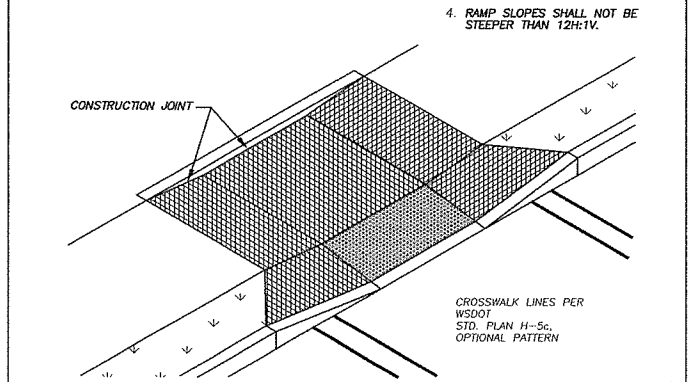

NO.	REVISIONS	DATE	BY
1	TRUNCATED DOME PATTERN	8/15/03	SCH

DWG: F4.dwg

Department of Public Works
CLARK COUNTY WASHINGTON
TYPE 4 RAMP
APPROVED
PETER CAPELLI, COUNTY ENGINEER — 8/22/00 DATE
F4
DESIGNED DB DRAWN KB DATE 7/24/00

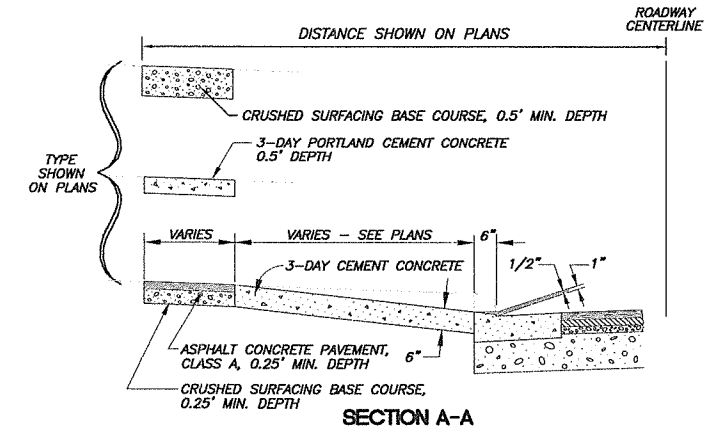

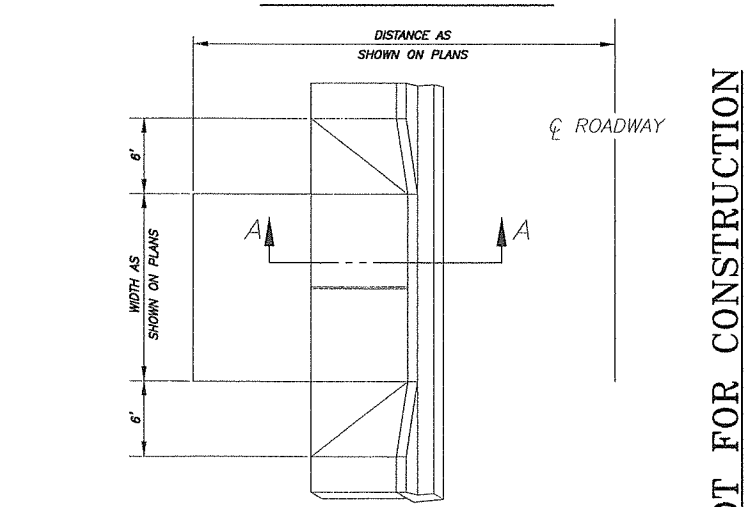

TYPICAL DRIVEWAY ENTRANCE
NTS

NOT FOR CONSTRUCTION

DESIGNED:	SLW
DRAWN:	GME
CRP:	330422
HORIZ:	NA
VERT:	NA
DATE:	5/28/2004
DWG:	D02
SHEET	12 OF 63

CALL 48 HOURS BEFORE YOU DIG
1-800-424-5555
"It's the Law"
NORTHWEST UTILITIES NOTIFICATION CENTER

otak Incorporated
700 Washington St., Suite 401
Vancouver, WA 98660
Phone: (360) 737-8053
FAX: (360) 737-9851

DESIGN & ENGINEERING DIVISION
NE 63RD STREET IMPROVEMENTS

ROADWAY DETAILS

proud past, promising future
CLARK COUNTY WASHINGTON

V: SHERYL 05/27/04 4:54pm --> V:\PROJECT\11900\11944\DWG\C9445012.DWG

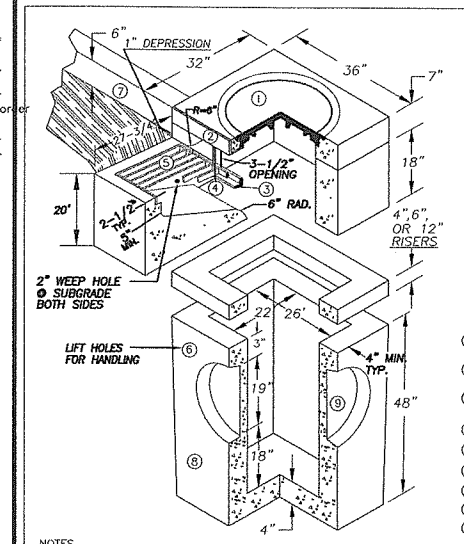

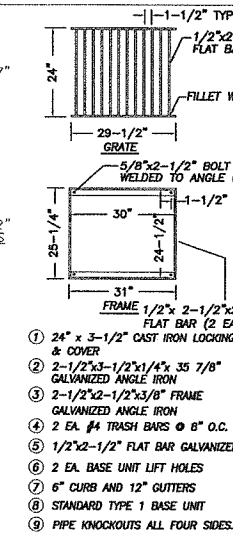

1. 24" x 3-1/2" CAST IRON LOCKING FRAME & COVER
2. 2-1/2"x3-1/2"x1/4"x 35 7/8" GALVANIZED ANGLE IRON
3. 2-1/2"x2-1/2"x3/8" FRAME GALVANIZED ANGLE IRON
4. 2 EA. #4 TRASH BARS @ 6" O.C.
5. 1/2"x2-1/2" FLAT BAR GALVANIZED GRATE
6. 2 EA. BASE UNIT LIFT HOLES
7. 6" CURB AND 12" GUTTERS
8. STANDARD TYPE 1 BASE UNIT
9. PIPE KNOCKOUTS ALL FOUR SIDES.

NOTES

1. COMBINATION CURB INLET TO BE CONSTRUCTED IN ACCORDANCE WITH ASTM C478 & C890 UNLESS SHOWN ON PLANS OR NOTED IN STANDARD SPECIFICATIONS.
2. REINFORCING FOR INLET UNIT, 3 EA. #4 HORZONTAL BARS; REINFORCING FOR TOP UNIT, 2 EA. #3 HORZONTAL BARS; REINFORCING FOR INLET SLOPED BASE, 4x4 MESH.
3. ALL REBAR TO MEET ASTM A615 GRADE 60.
4. AS AN ACCEPTABLE ALTERNATIVE TO REBAR, WELDED WIRE FABRIC HAVING A MIN. AREA OF 0.12 SQAURE INCHES PER FOOT MAY BE USED. WELDED WIRE FABRIC SHALL COMPLY TO ASTM A497. WIRE FABRIC SHALL NOT BE PLACED IN KNOCKOUTS.
5. ALL REINFORCED CAST-IN-PLACE CONCRETE SHALL BE CLASS 4,000
6 PRECAST BASES SHALL BE FURNISHED WITH CUTOUTS OR KNOCKOUTS. KNOCKOUTS SHALL HAVE A WALL THICKNESS OF 2" MIN. ALL PIPE SHALL BE INSTALLED IN FACTORY PROVIDED KNOCKOUTS. UNUSED KNOCKOUTS NEED NOT BE GROUTED IF WALL IS LEFT INTACT.
7. KNOCKOUTS OR CUTOUT HOLE SIZE IS EQUAL TO PIPE OUTER DIAM. PLUS INLET WALL THICKNESS.
8. ROUND KNOCKOUTS MAY BE ON ALL 4 SIDES WITH MAX. DIAM. OF 17".
9. THE MAX. DEPTH FROM THE FINISHED GRADE TO THE PIPE INVERT IS 5'-0".
10. ANY PROTUDING ENDS OF PIPES SHALL BE TRIMMED FLUSH WITH THE INSIDE WALLS AND GROUTED TO THE SATISFACTION OF ENGINEER.
11. GRATE TO HAVE 1" DEPRESSION AT GUTTER INLET WITH GUTTER TO BE TAPERED DOWN TO INLET.
12. INSTALL REMOVABLE APWA TYPE 80A TRAP OR EQUAL, SEE STD. PLAN D2.1.
13. CONTRACTOR SHALL HAVE THE OPTION OF FURNISHING PRECAST OR CAST-IN-PLACE INLET STRUCTURES, UNLESS SPECIFIED.
14. SEE STD. PLAN 4.1 FOR BASIN GUTTER PAN DETAIL.

DWG: D3-0.DWG

NO.	REVISIONS	DATE	BY

Department of Public Works
CLARK COUNTY WASHINGTON
proud past, promising future

STANDARD TYPE 1 COMBINATION CURB INLET
APPROVED — PETER CAPELLI, COUNTY ENGINEER — 01/01/04 DATE
STANDARD D3.0
PLAN No.
DESIGNED SCH
DRAWN SCH
DATE 09/09/02

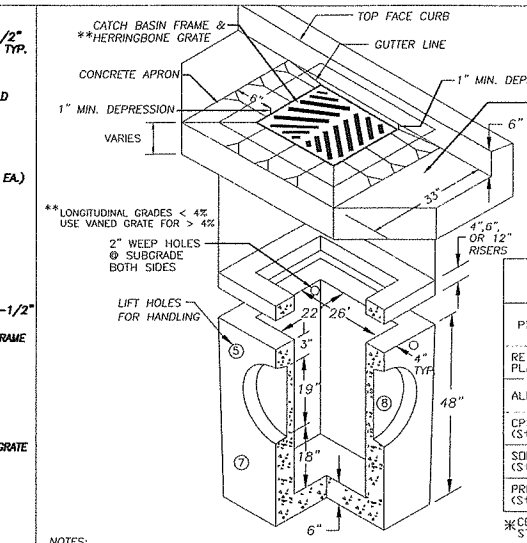

PIPE ALLOWANCES	
PIPE MATERIAL	MAXIMUM INSIDE DIAMETER
REINFORCED OR PLAIN CONCRETE	18"
ALL METAL PIPE	21"
CPSSP ✳ (Std. Spec. 9-05.20	18"
SOLID WALL PVC (Std. Spec. 9-05.12(1)	21"
PROFILE WALL PVC (Std. Spec. 9-05.12(2)	21"

✳CORRUGATED POLYETHYLENE STORM SEWER PIPE

NOTES:

1. CURB INLET TO BE CONSTRUCTED IN ACCORDANCE WITH ASTM C478 (AASHTO) M 199) & C890 UNLESS SHOWN ON PLANS OR NOTED IN STANDARD SPECIFICATIONS.
2. REINFORCING FOR INLET UNIT, 3 EA. #4 HORIZONTAL BARS.
3. REINFORCING FOR TOP UNIT, 2 EA. #3 HORIZONTAL BARS.
4. ALL REBAR TO MEET ASTM A615 GRADE 60.
5. AS AN ACCEPTABLE ALTERNATIVE TO REBAR, WELDED WIRE FABRIC HAVING A MIN. AREA OF 0.12 SQUARE INCHES PER FOOT MAY BE USED. WELDED WIRE FABRIC SHALL COMPLY TO ASTM A497. WIRE FABRIC SHALL NOT BE PLACED IN KNOCKOUTS.
6. ALL REINFORCED CAST-IN-PLACE CONCRETE SHALL BE CLASS 4,000.
7 PRECAST BASES SHALL BE FURNISHED WITH CUTOUTS OR KNOCKOUTS. KNOCKOUTS SHALL HAVE A WALL THICKNESS OF 2" MIN. ALL PIPE SHALL BE INSTALLED IN FACTORY PROVIDED KNOCKOUTS. UNUSED KNOCKOUTS NEED NOT BE GROUTED IF WALL IS LEFT INTACT.
8. KNOCKOUTS OR CUTOUT HOLE SIZE IS EQUAL TO PIPE OUTER DIAM. PLUS INLET WALL THICKNESS.
9. ROUND KNOCKOUTS MAY BE ON ALL 4 SIDES WITH MAX. DIAM. OF 20".
10. THE MAX. DEPTH FROM THE FINISHED GRADE TO THE PIPE INVERT IS 5'-0".
11. ANY PROTRUDING ENDS OF PIPES SHALL BE TRIMMED FLUSH WITH THE INSIDE WALLS AND GROUTED TO THE SATISFACTION OF ENGINEER.
12. CATCH BASIN FRAME AND GRATE SHALL BE IN ACCORDANCE WITH WDOT STANDARD SPECIFICATIONS AND MEET THE STRENGTH REQUIREMENTS OF FEDERAL SPECIFICATION RR-F-621D. MATING SURFACES SHALL BE FINISHED TO ASSURE NON-ROCKING FIT WITH ANY COVER POSITION.
13. FRAME MAY BE INSTALLED WITH FLANGE DOWN OR CAST INTO RISER.
14 INSTALL REMOVABLE APWA TYPE 60A TRAP OR EQUAL, SEE STD. PLAN D2.1.
15. CONTRACTOR SHALL HAVE THE OPTION OF FURNISHING PRECAST OR CAST-IN-PLACE INLET STRUCTURES, UNLESS SPECIFIED.

DWG: D4-0.DWG

NO.	REVISIONS	DATE	BY

Department of Public Works
CLARK COUNTY WASHINGTON
proud past, promising future

STANDARD CATCH BASIN TYPE 1
APPROVED — PETER CAPELLI, COUNTY ENGINEER — 01/01/04 DATE
STANDARD D4.0
PLAN No.
DESIGNED SCH
DRAWN SCH
DATE 07/07/03

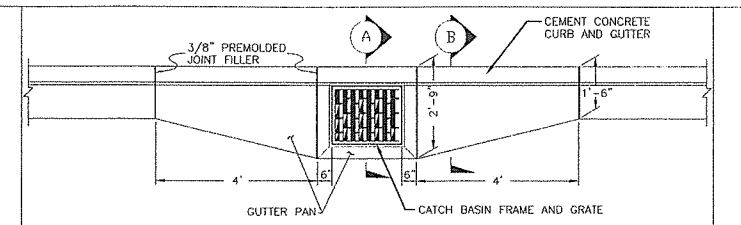

PLAN VIEW
CATCH BASIN GUTTER PAN

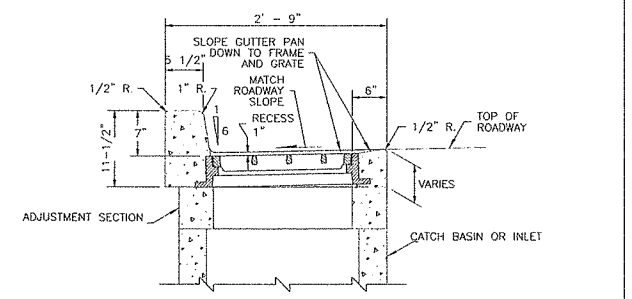

SECTION (A)

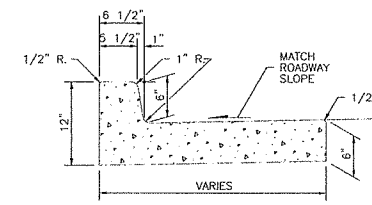

SECTION (B)

DWG: D4-1DWG

NO.	REVISIONS	DATE	BY

Department of Public Works
CLARK COUNTY WASHINGTON
proud past, promising future

CATCH BASIN GUTTER PAN
APPROVED — PETER CAPELLI, COUNTY ENGINEER — 01/01/04 DATE
STANDARD D4.1
PLAN No.
DESIGNED SCH
DRAWN SCH
DATE 01/01/03

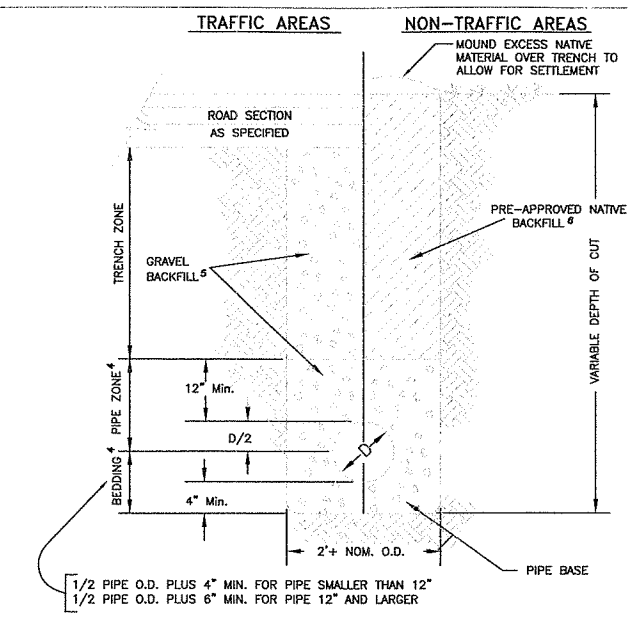

NOTES

1. FOR INSTALLATION OF DRAINAGE PIPE IN NEW DEVELOPMENT.
2. GENERAL PIPE INSTALLATION REQUIREMENTS SHALL BE PER SECTION 7-08 WSDOT SPECS.
3. TRENCH BACK FILL SHALL CONFORM TO CCC 40.350.030(C)(4)(e).
4. PIPE ZONE AND BEDDING MATERIAL SHALL CONFORM TO SECTION 9-03.12(3) WSDOT SPECS.
5. GRAVEL BACKFILL PER WSDOT SPECIFICATION SECTION 9-03.19, AND COMPACTED TO 95% MAX. DENSITY (AASHTO T-99). NATIVE SOILS MAY BE USED UPON APPROVAL BY REVIEWING AUTHORITY IF TESTING SHOWS MATERIAL IS CLASSIFIED AS A-1 OR A-3 BY AASHTO.
6. OUTSIDE THE ROADWAY PRISM, SUITABLE NATIVE BACKFILL SHALL BE COMPACTED TO 90% MAX. DENSITY (AASHTO T-99).
7. ALL COMPACTION SHALL BE IN ACCORDANCE WITH THE COMPACTION CONTROL TEST OF SECTION 2-03.3(14)D.

DWG: D14.DWG

NO.	REVISIONS	DATE	BY

Department of Public Works
CLARK COUNTY WASHINGTON
proud past, promising future

PIPE BEDDING AND BACKFILL DETAIL
APPROVED — PETER CAPELLI, COUNTY ENGINEER — 01/01/04 DATE
STANDARD D14
PLAN No.
DESIGNED SCH
DRAWN SCH
DATE 6/14/03

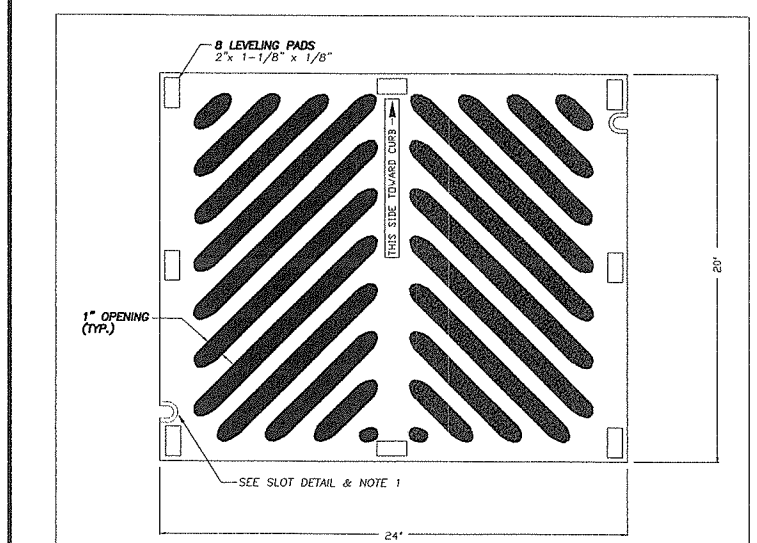

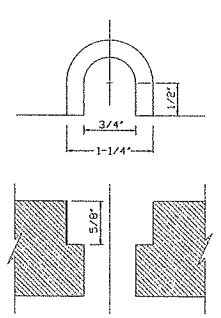

SLOT DETAIL

NOTES

1. WELDING NOT PERMITTED
2. USE VANED GRATE PER STD. PLAN D4.4 WHERE LONGITUDINAL SLOPE EXCEEDS 4%.
3. WHEN BOLT DOWN GRATES ARE SPECIFIED, PROVIDE TWO SLOTS IN THE GRATE THAT ARE VERTICALLY ALIGNED WITH THE HOLES IN THE FRAME. LOCATION OF BOLT DOWN SLOTS VARIES AMONG DIFFERENT MANUFACTURERS.
4. REFER TO WSDOT STANDARD SPECIFICATION 9-05.15(2) FOR ADDITIONAL REQUIREMENTS.
5. FOR FRAME DETAIL, SEE STD. PLAN D4.2
6. THE THICKNESS OF THE GRATE SHALL NOT EXCEED 1-5/8".

DWG: D4-3.dwg

NO.	REVISIONS	DATE	BY

Department of Public Works
CLARK COUNTY WASHINGTON
proud past, promising future

HERRINGBONE GRATE FOR CATCH BASIN
APPROVED — PETER CAPELLI, COUNTY ENGINEER — 01/01/04 DATE
STANDARD D4.3
PLAN No.
DESIGNED SCH
DRAWN SCH
DATE 07/07/03

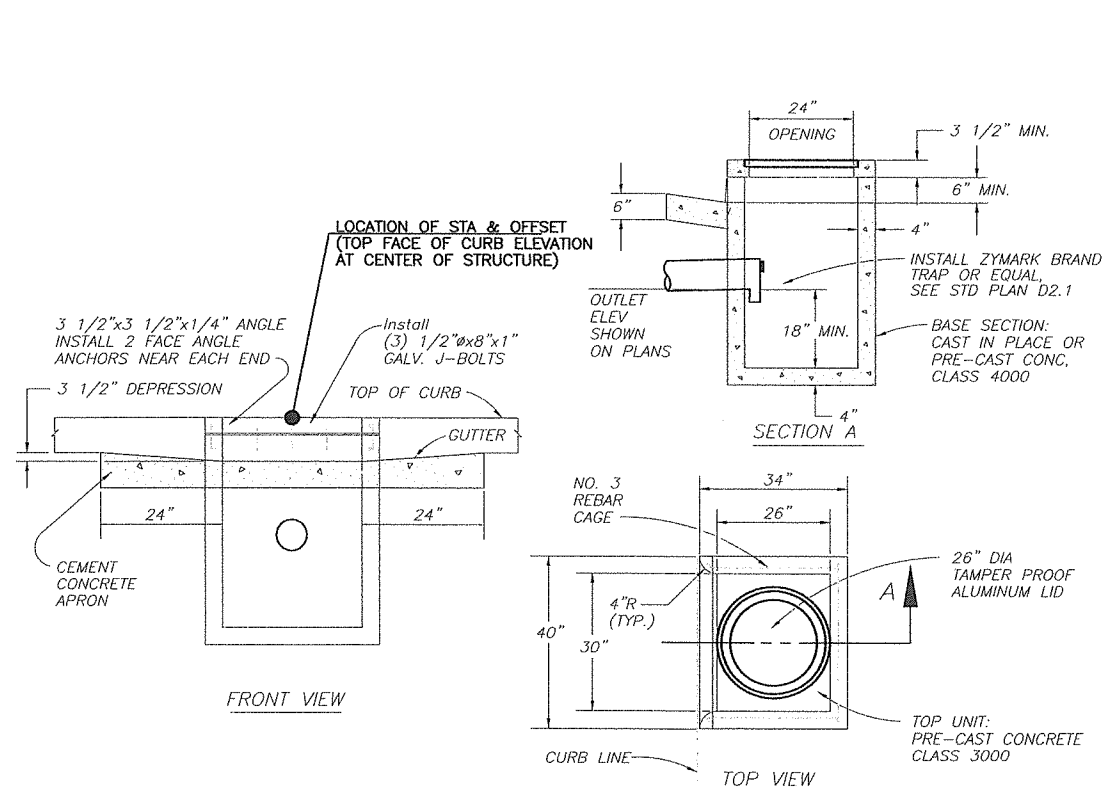

CURB INLET DETAIL
NTS

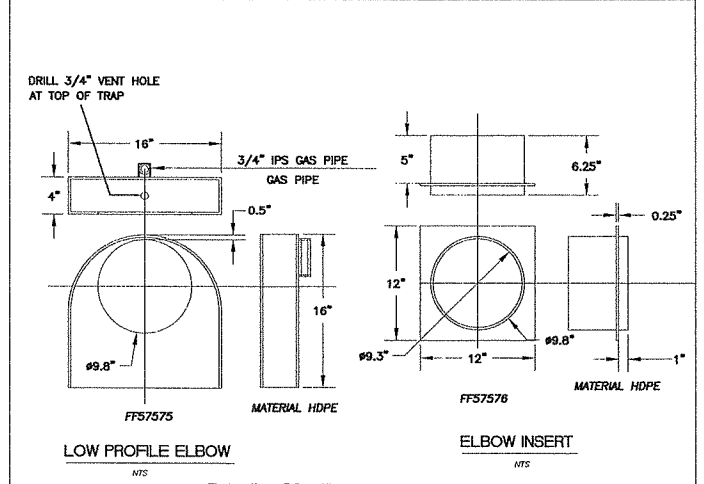

LOW PROFILE ELBOW
NTS

ELBOW INSERT
NTS

ZYMARK BRAND OR EQUIVALENT

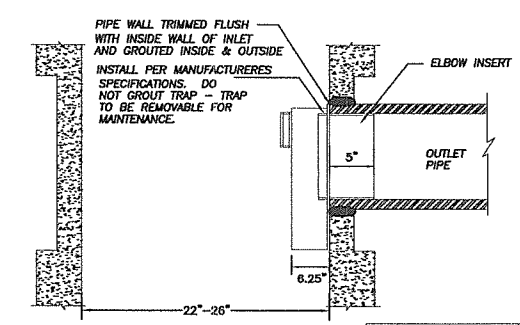

DWG: D2-1.DWG

NO.	REVISIONS	DATE	BY

Department of Public Works
CLARK COUNTY WASHINGTON
proud past, promising future

CATCH BASIN OUTLET PIPE TRAP
APPROVED — PETER CAPELLI, COUNTY ENGINEER — 01/01/04 DATE
STANDARD D2.1
PLAN No.
DESIGNED SCH
DRAWN SCH
DATE 09/23/02

XREF LIST
Ltscale: 40
Resolved
C944x001_border
PKW WASH
Unresolved
A14
C978X001

V: SHERYL 05/27/04 4:55pm ---> V:\PROJECT\11900\11944\DWG\C9944SH13.DWG

DESIGNED:	SLW
DRAWN:	GME
CRP:	330422
HORIZ.	NA
VERT.	NA
DATE:	5/28/2004
DWG:	D03
SHEET	13 OF 63

CALL 48 HOURS BEFORE YOU DIG 1-800-424-5555 "It's the Law"
NORTHWEST UTILITIES NOTIFICATION CENTER

otak Incorporated
700 Washington St., Suite 401
Vancouver, WA 98660
Phone: (360) 737-8813
FAX: (360) 737-9801

DESIGN & ENGINEERING DIVISION
NE 63RD STREET IMPROVEMENTS

ROADWAY DRAINAGE DETAILS

NOT FOR CONSTRUCTION

proud past, promising future
CLARK COUNTY WASHINGTON

V: SHERYL 05/27/04 4:57pm --> V:\PROJECT\11900\11944\DWG\C944S014.DWG

XREF LIST
Ltscale: 40
Resolved
C944X001_Border
PXW WASH
Unresolved
C978X001

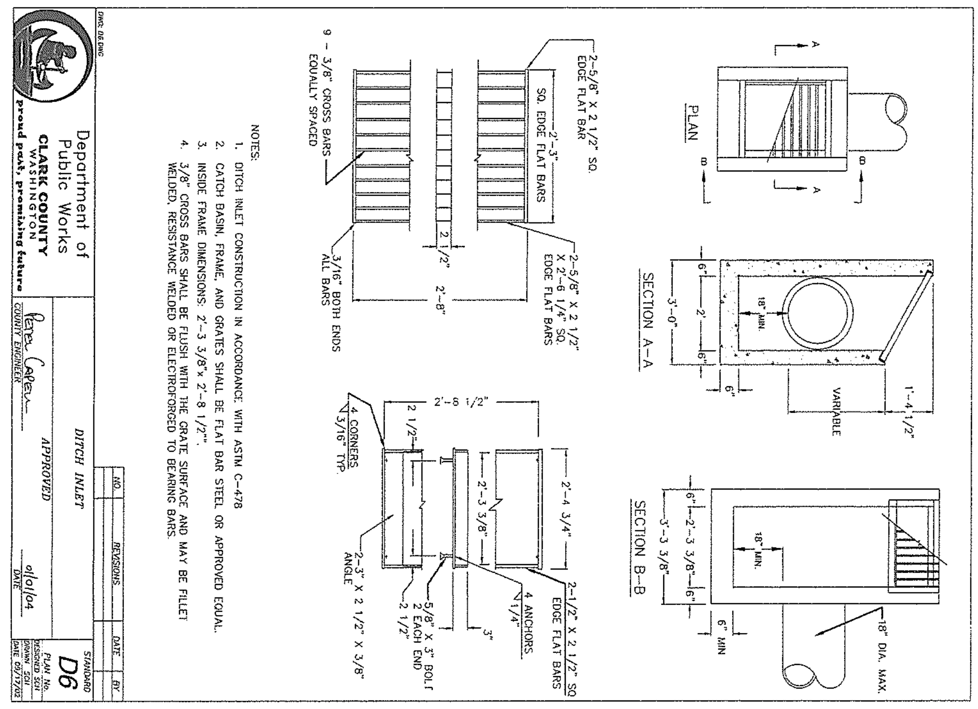

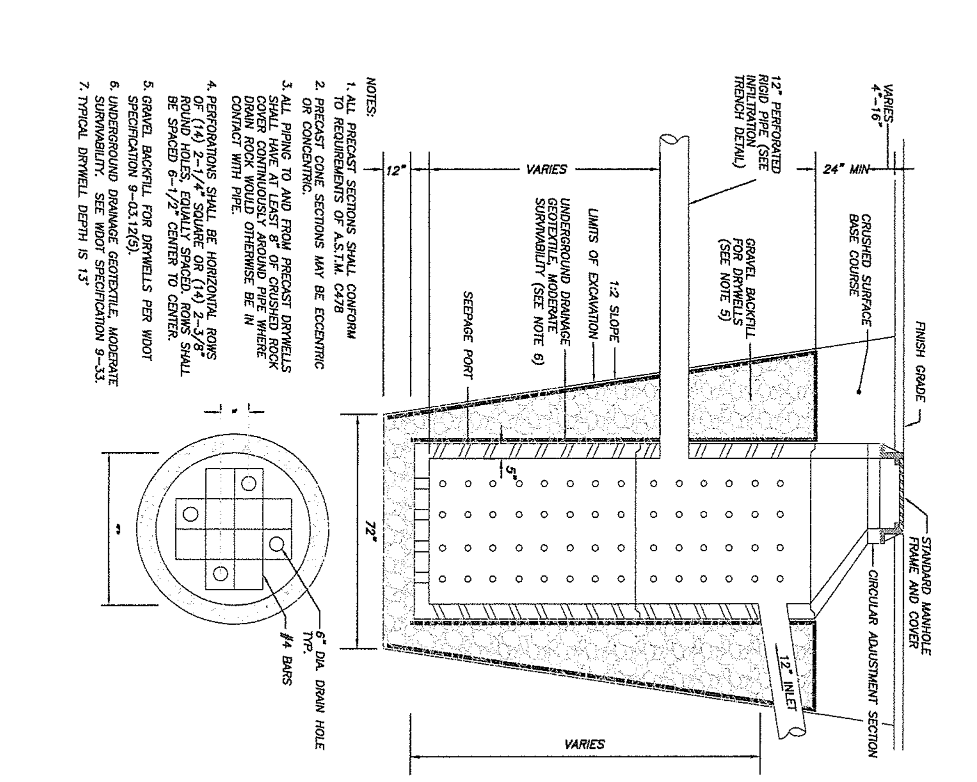

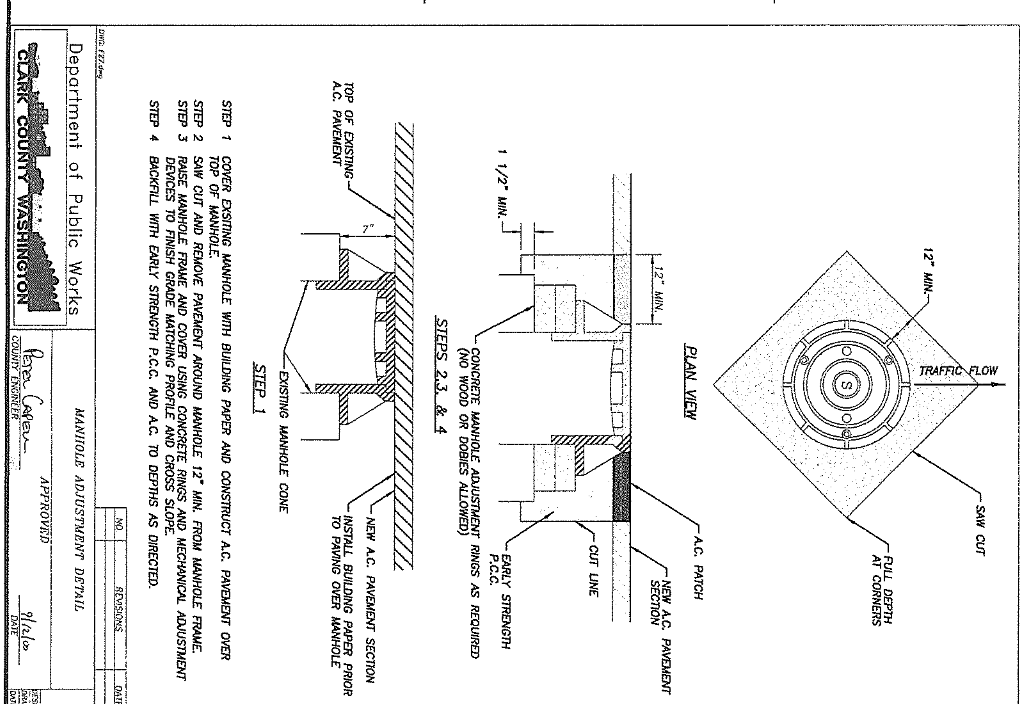

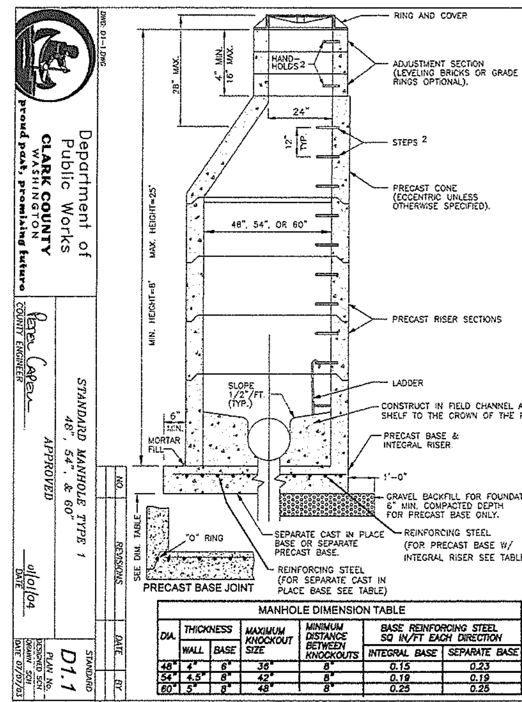

NOTES:

1. MANHOLES SHALL BE CONSTRUCTED IN ACCORDANCE WITH AASHTO M199 UNLESS OTHERWISE SHOWN ON PLANS OR NOTED IN THE WSDOT/APWA STANDARD SPECIFICATIONS.
2. HANDHOLDS IN ADJUSTMENT SECTION SHALL HAVE 3" MIN. CLEARANCE. STEPS IN MANHOLE SHALL HAVE 6" MIN. CLEARANCE. SEE PLAN NO. D1.5, "MANHOLE DETAILS." HANDHOLDS SHALL BE PLACED IN ALTERNATING GRADE RINGS OR LEVELING BRICK COURSE WITH A MIN. OF ONE HAND HOLD BETWEEN THE LAST STEP AND THE TOP OF THE MANHOLE.
3. ALL REINFORCED CAST-IN-PLACE CONCRETE SHALL BE CLASS 4000. ALL PRECAST CONCRETE SHALL BE CLASS 4000. NON-REINFORCED CONCRETE IN CHANNEL AND SHELF SHALL BE CLASS 3000.
4. PRECAST BASES SHALL BE FURNISHED WITH CUTOUTS OR KNOCKOUTS. KNOCKOUTS SHALL HAVE WALL THICKNESS OF 2" MIN. UNUSED KNOCKOUTS NEED NOT BE GROUTED IF WALL IS LEFT INTACT. PIPES SHALL BE INSTALLED ONLY IN FACTORY KNOCKOUTS UNLESS OTHERWISE APPROVED BY THE ENGINEER.
5. KNOCKOUT OR CUTOUT HOLE SIZE SHALL EQUAL PIPE OUTER DIAM. PLUS MANHOLE WALL THICKNESS. SEE MANHOLE DIMENSION TABLE BELOW.
6. MANHOLE RINGS AND COVERS SHALL BE IN ACCORDANCE WITH SEC. 7.05 AND MEET THE STRENGTH REQUIREMENTS OF FEDERAL SPECIFICATION RR-F-621D. MATING SURFACES SHALL BE FINISHED TO ASSURE NON-ROCKING FIT WITH ANY COVER POSITION.
7. ALL BASE REINFORCING STEEL SHALL HAVE A MIN. YIELD STRENGTH OF 60,000 PSI AND BE PLACED IN THE UPPER HALF OF THE BASE WITH 1" MIN. CLEARANCE.
8. FOR HEIGHTS OF 12' OR LESS, MIN. SOIL BEARING VALUE SHALL EQUAL 3,300 POUNDS PER SQUARE FOOT. FOR HEIGHTS OVER 12', MIN. SOIL BEARING VALUE SHALL EQUAL 3,800 POUNDS PER SQUARE FOOT.
9. FOR DETAILS SHOWING GRADE RING, LADDER, STEPS, HANDHOLDS, AND TOP SLABS, SEE PLAN NO. D1.5, "MANHOLE DETAILS."
10. INSIDE DROP MAXIMUM TO BE 4' VERTICAL DISTANCE I.E. TO I.E.
11. KNOCKOUTS TO BE USED WHEN STUB OUT PIPE IS 3' OR LESS.
12. MINIMUM 0.20' FALL BETWEEN INLET AND OUTLET, ANY REDUCTION IN THIS DESIGN REQUIREMENT MUST BE APPROVED BY REVIEWING AUTHORITY.
13. SEE THE WSDOT/APWA STANDARD SPECIFICATIONS SEC. 7-05.3 FOR JOINT REQUIREMENTS.

MANHOLE DIMENSION TABLE

DIA.	THICKNESS WALL	THICKNESS BASE	MAXIMUM KNOCKOUT SIZE	MINIMUM DISTANCE BETWEEN KNOCKOUTS	BASE REINFORCING STEEL SQ IN/FT EACH DIRECTION INTEGRAL BASE	SEPARATE BASE
48"	4"	6"	36"	8"	0.15	0.23
54"	4.5"	6"	42"	8"	0.19	0.19
60"	5"	8"	48"	8"	0.25	0.25

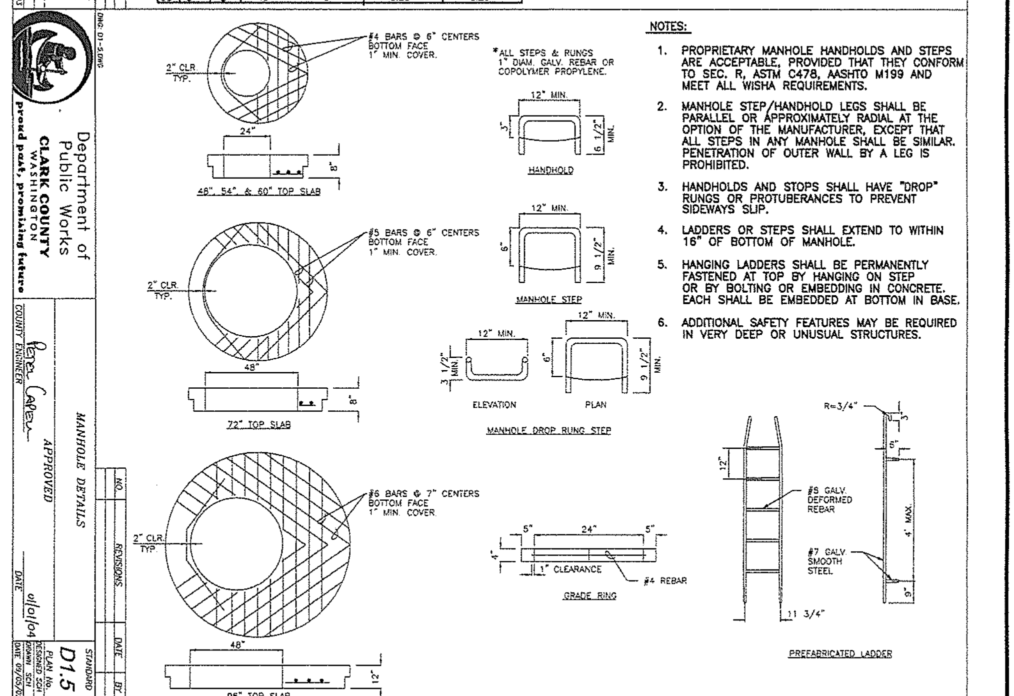

NOTES:

1. PROPRIETARY MANHOLE HANDHOLDS AND STEPS ARE ACCEPTABLE, PROVIDED THAT THEY CONFORM TO SEC. R, ASTM C478, AASHTO M199 AND MEET ALL WISHA REQUIREMENTS.
2. MANHOLE STEP/HANDHOLD LEGS SHALL BE PARALLEL OR APPROXIMATELY RADIAL AT THE OPTION OF THE MANUFACTURER, EXCEPT THAT ALL STEPS IN ANY MANHOLE SHALL BE SIMILAR. PENETRATION OF OUTER WALL BY A LEG IS PROHIBITED.
3. HANDHOLDS AND STOPS SHALL HAVE "DROP" RUNGS OR PROTUBERANCES TO PREVENT SIDEWAYS SLIP.
4. LADDERS OR STEPS SHALL EXTEND TO WITHIN 16" OF BOTTOM OF MANHOLE.
5. HANGING LADDERS SHALL BE PERMANENTLY FASTENED AT TOP BY HANGING ON STEP OR BY BOLTING OR EMBEDDING IN CONCRETE. EACH SHALL BE EMBEDDED AT BOTTOM IN BASE.
6. ADDITIONAL SAFETY FEATURES MAY BE REQUIRED IN VERY DEEP OR UNUSUAL STRUCTURES.

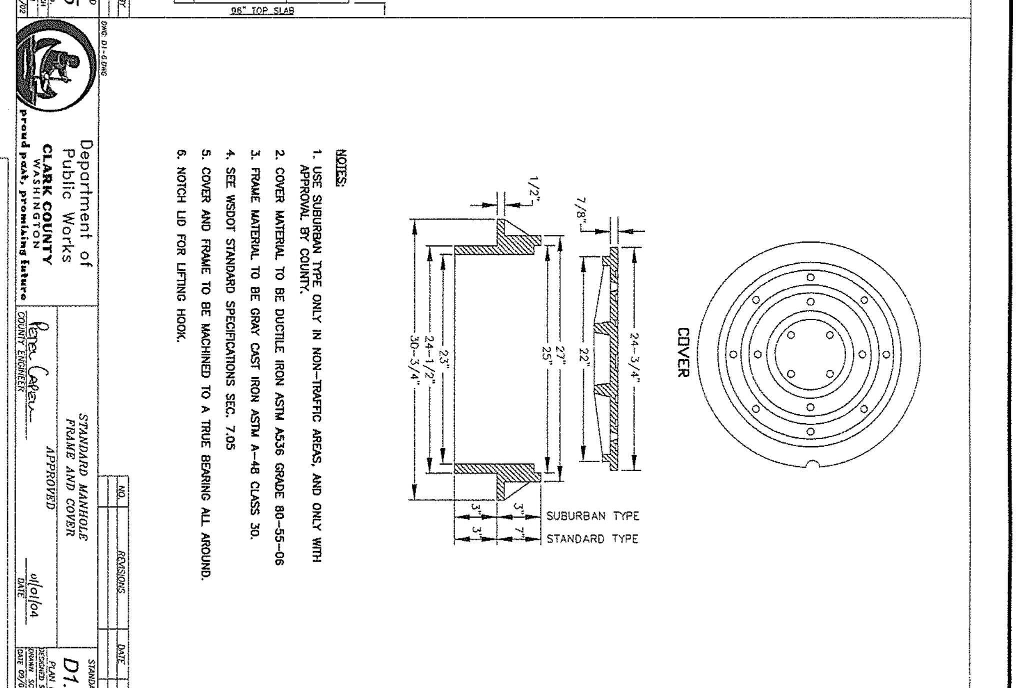

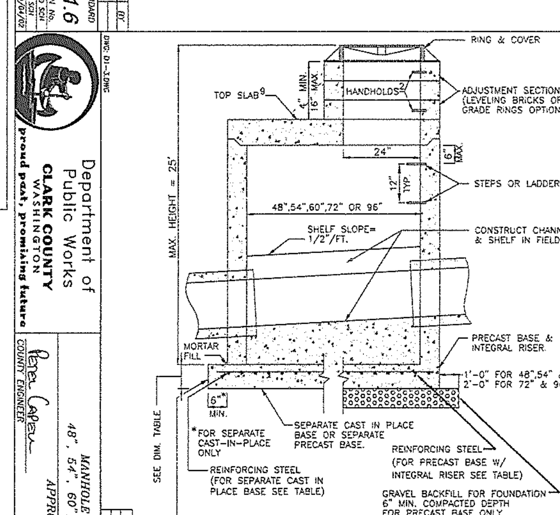

NOTES:

1. MANHOLES SHALL BE CONSTRUCTED IN ACCORDANCE WITH AASHTO M199 UNLESS OTHERWISE SHOWN ON PLANS OR NOTED IN THE WSDOT/APWA STANDARD SPECIFICATIONS.
2. HANDHOLDS IN ADJUSTMENT SECTION SHALL HAVE 3" MIN. CLEARANCE. STEPS IN MANHOLE SHALL HAVE 6" MIN. CLEARANCE. SEE PLAN D1.5, "MANHOLE DETAILS." HANDHOLDS SHALL BE PLACED IN ALTERNATING GRADE RINGS OR LEVELING BRICK COURSE WITH A MIN. OF ONE HANDHOLD BETWEEN THE LAST STEP AND THE TOP OF THE MANHOLE.
3. ALL REINFORCED CAST-IN-PLACE CONCRETE SHALL BE CLASS4000. NON-REINFORCED CONCRETE IN CHANNEL AND SHELF SHALL BE CLASS 3000. ALL PRECAST CONCRETE SHALL BE CLASS 4000.
4. PRECAST BASES SHALL BE FURNISHED WITH CUTOUTS OR KNOCKOUTS. KNOCKOUTS SHALL HAVE WALL THICKNESS OF 2" MIN. UNUSED KNOCKOUTS NEED NOT BE GROUTED IF WALL IS LEFT INTACT. PIPES SHALL BE INSTALLED ONLY IN FACTORY KNOCKOUTS UNLESS OTHERWISE APPROVED BY THE ENGINEER.
5. KNOCKOUT OR CUTOUT HOLE SIZE SHALL EQUAL PIPE OUTER DIAM. PLUS MANHOLE WALL THICKNESS. SEE MANHOLE DIMENSION TABLE BELOW.
6. MANHOLE RINGS AND COVERS SHALL BE IN ACCORDANCE WITH SEC. 7.05 AND MEET THE STRENGTH REQUIREMENTS OF FEDERAL SPECIFICATION RR-F-621D. MATING SURFACES SHALL BE FINISHED TO ASSURE NON-ROCKING FIT WITH ANY COVER POSITION.
7. ALL BASE REINFORCING STEEL SHALL HAVE A MIN. YIELD STRENGTH OF 60,000 PSI AND BE PLACED IN THE UPPER HALF OF THE BASE WITH 1" MIN. CLEARANCE.
8. FOR HEIGHTS OF 12' OR LESS, MIN. SOIL BEARING VALUE SHALL EQUAL 3,300 POUNDS PER SQUARE FOOT. FOR HEIGHTS OVER 12', MIN. SOIL BEARING VALUE SHALL EQUAL 3,800 POUNDS PER SQUARE FOOT.
9. FOR DETAILS SHOWING GRADE RING, LADDER, STEPS, HANDHOLDS, AND TOP SLABS. SEE PLAN D1.5, "MANHOLE DETAILS."
10. INSIDE DROP MAXIMUM TO BE 4' VERTICAL DISTANCE I.E. TO I.E.
11. KNOCKOUTS TO BE USED WHEN STUB OUT PIPE IS 3' OR LESS.
12. MINIMUM 0.20' FALL BETWEEN INLET AND OUTLET, ANY REDUCTION IN THIS DESIGN REQUIREMENT MUST BE APPROVED BY REVIEWING AUTHORITY.
13. SEE THE WSDOT/APWA STANDARD SPECIFICATIONS SEC. 7-05.3 FOR JOINT REQUIREMENTS.

MANHOLE DIMENSION TABLE

DIA.	THICKNESS WALL	THICKNESS BASE	MAXIMUM KNOCKOUT SIZE	MINIMUM DISTANCE BETWEEN KNOCKOUTS	BASE REINFORCING STEEL SQ IN/FT EACH DIRECTION INTEGRAL BASE	SEPARATE BASE
48"	4"	6"	36"	6"	0.15	0.23
54"	4.5"	8"	42"	8"	0.19	0.19
60"	5"	8"	48"	8"	0.25	0.25
72"	6"	8"	60"	12"	0.24	0.35
96"	8"	12"	84"	12"	0.29	0.39

NOT FOR CONSTRUCTION

proud past, promising future
CLARK COUNTY
WASHINGTON

DESIGN & ENGINEERING DIVISION
NE 63RD STREET IMPROVEMENTS

ROADWAY DRAINAGE DETAILS

otak Incorporated
700 Washington St., Suite 401
Vancouver, WA 98660
Phone: (360) 737-9613
FAX: (360) 737-9651

CALL 48 HOURS BEFORE YOU DIG
1-800-424-5555
"It's the Law"
NORTHWEST UTILITIES NOTIFICATION CENTER

DESIGNED:	SLW
DRAWN:	GME
CRP:	330422
HORIZ.	NA
VERT.	NA
DATE:	5/28/2004
DWG:	D04
SHEET	14 OF 63

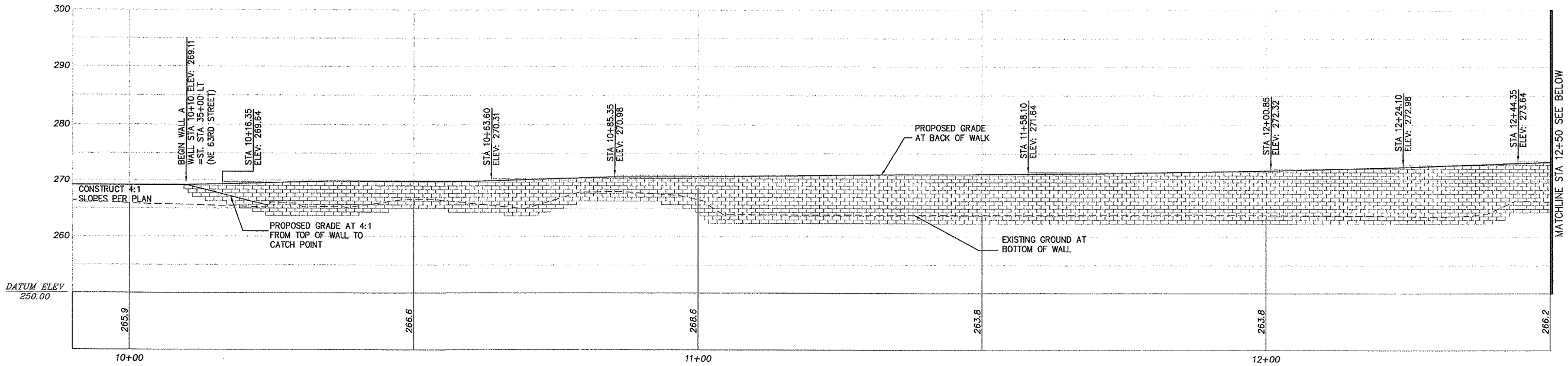

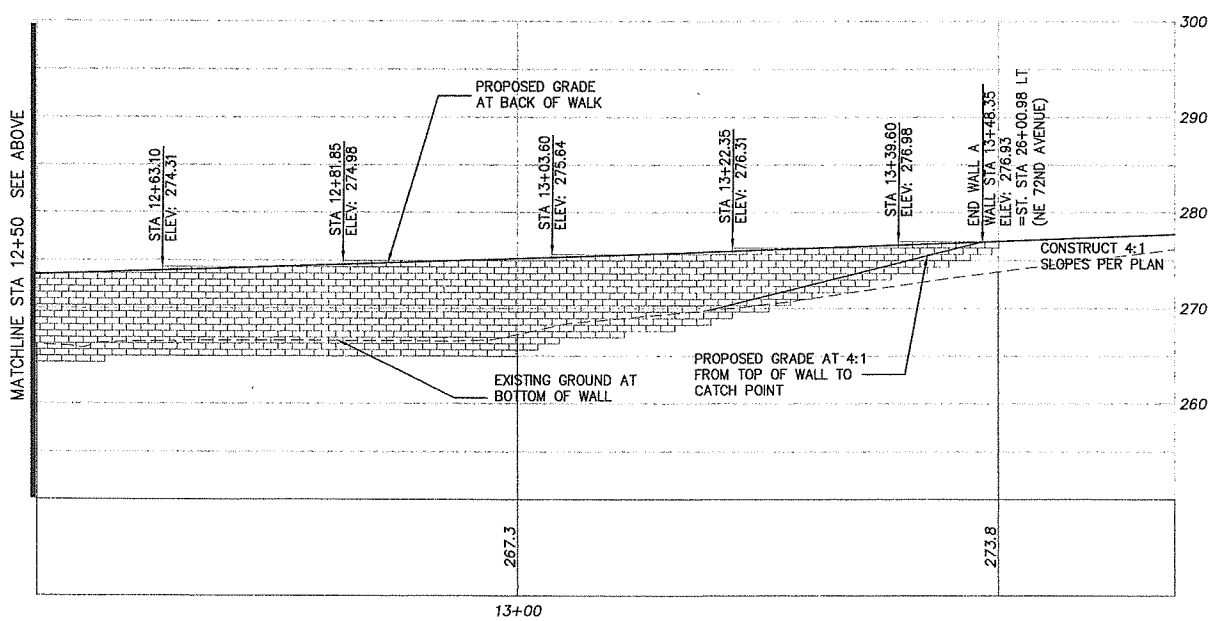

MODULAR BLOCK WALL "A"

SCALE: 1"=10' HORIZONTAL AND VERTICAL

NOTES:

1. SEE SHEET RW5 FOR WALL DETAILS
2. OFFSETS SHOWN IN PROFILE ARE FROM PROPOSED CENTERLINE TO BACK OF SIDEWALK.
3. INSTALL CHAIN LINK FENCE TYPE 6 (BLACK VINYL COATED) PER DETAIL SHEET RW5, FOR LENGTH OF WALL.

NOT FOR CONSTRUCTION

DESIGN & ENGINEERING DIVISION
NE 63RD STREET IMPROVEMENTS

RETAINING WALL PROFILES

DESIGNED: SLW
DRAWN: GME
CRP: 330422
HORIZ. 1" = 10'
VERT. 1" = 10'
DATE: 5/28/2004
DWG: RW1
SHEET 15 OF 63

CALL 48 HOURS BEFORE YOU DIG
1-800-424-5555
"It's the Law"
NORTHWEST UTILITIES NOTIFICATION CENTER

PAMELA J. LEDEMANN
STATE OF WASHINGTON
22440
REGISTERED PROFESSIONAL ENGINEER
EXPIRES AUG. 31, 2005

otak Incorporated
700 Washington St. Suite 401
Vancouver, WA. 98660
Phone: (360) 737-8593
FAX: (360) 737-9651

proud past, promising future
CLARK COUNTY
WASHINGTON

REF LIST
scale: 10
resolved
944x001_border
944x511
CW WASH

V: SHERYL 05/27/04 5:27pm --> V:\PROJECT\11900\11944\DWG\G9445015.DWG

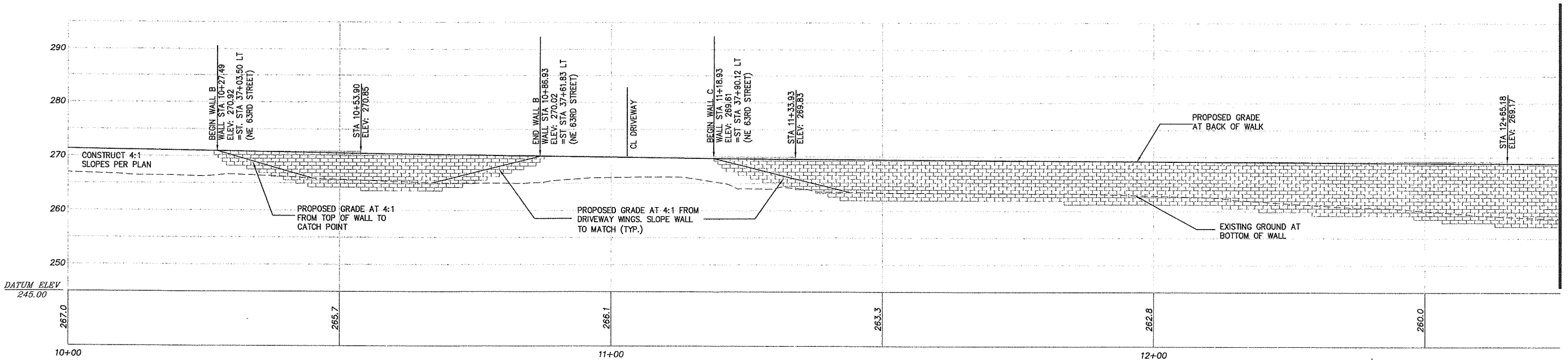

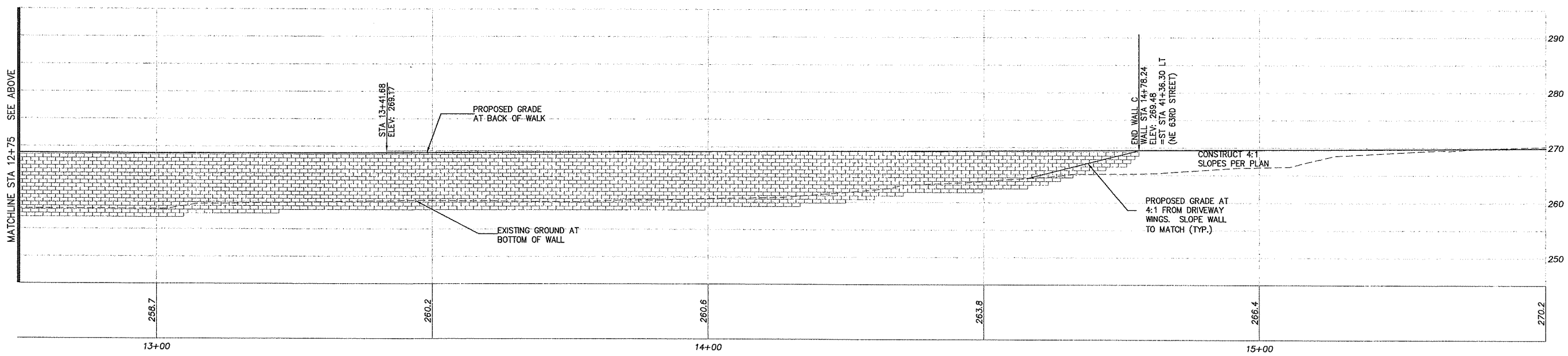

MODULAR BLOCK WALL "B" AND "C"

SCALE: 1"=10' HORIZONTAL AND VERTICAL

NOTES:

1. SEE SHEET RW5 FOR WALL DETAILS
2. OFFSETS SHOWN IN PROFILE ARE FROM PROPOSED CENTERLINE TO BACK OF SIDEWALK.
3. INSTALL CHAIN LINK FENCE TYPE 6 (BLACK VINYL COATED) PER DETAIL SHEET RW5, FOR LENGTH OF WALL.

NOT FOR CONSTRUCTION

DESIGN & ENGINEERING DIVISION
NE 63RD STREET IMPROVEMENTS

RETAINING WALL PROFILES

DESIGNED:	SLW
DRAWN:	GME
CRP:	330422
HORIZ.	1" = 10'
VERT.	1" = 10'
DATE:	5/28/2004
DWG:	RW2
SHEET	16 OF 63

CALL 48 HOURS BEFORE YOU DIG
1-800-424-5555
"It's the Law"
NORTHWEST UTILITIES NOTIFICATION CENTER

PAMELA J. WIEDEMANN
STATE OF WASHINGTON
22448
REGISTERED PROFESSIONAL ENGINEER
EXPIRES AUG. 31, 2005

otak Incorporated
700 Washington St. Suite 401
Vancouver, WA 98660
Phone: (360) 737-8610
FAX: (360) 737-8651

proud past, promising future
CLARK COUNTY
WASHINGTON

REF LIST
scale: 10
resolved
944x001_border
944x511
KW WASH

V: SHERYL 05/28/04 8:22am --> V:\PROJECT\11900\11944\DWG\C944S016.DWG

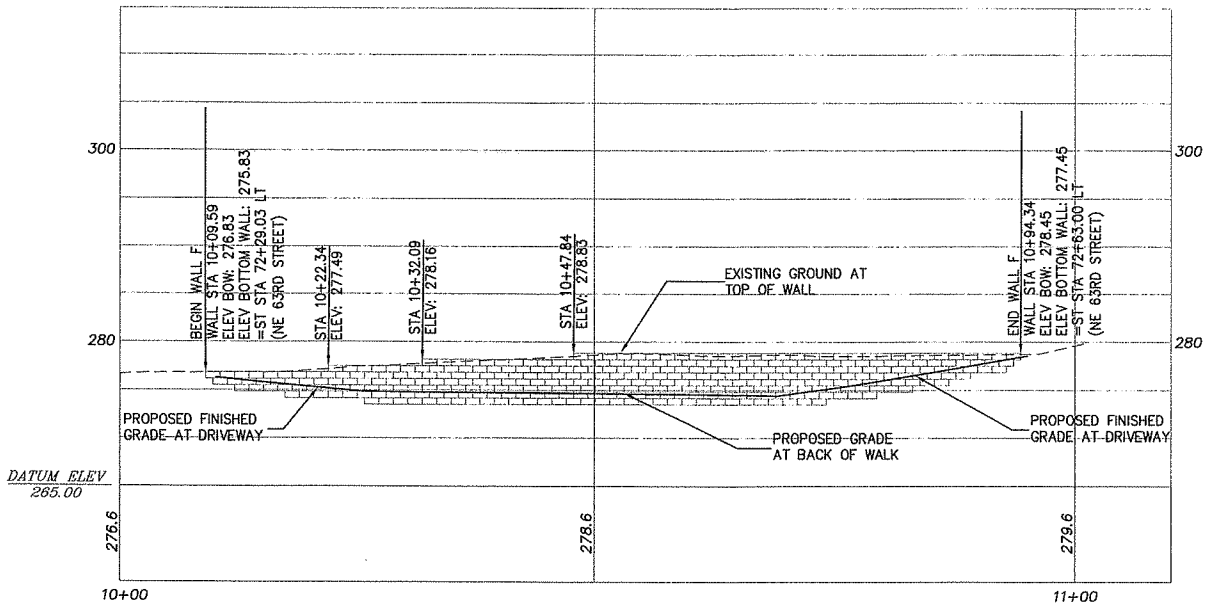

MODULAR BLOCK WALL "F"

SCALE: 1"=10' HORIZONTAL AND VERTICAL

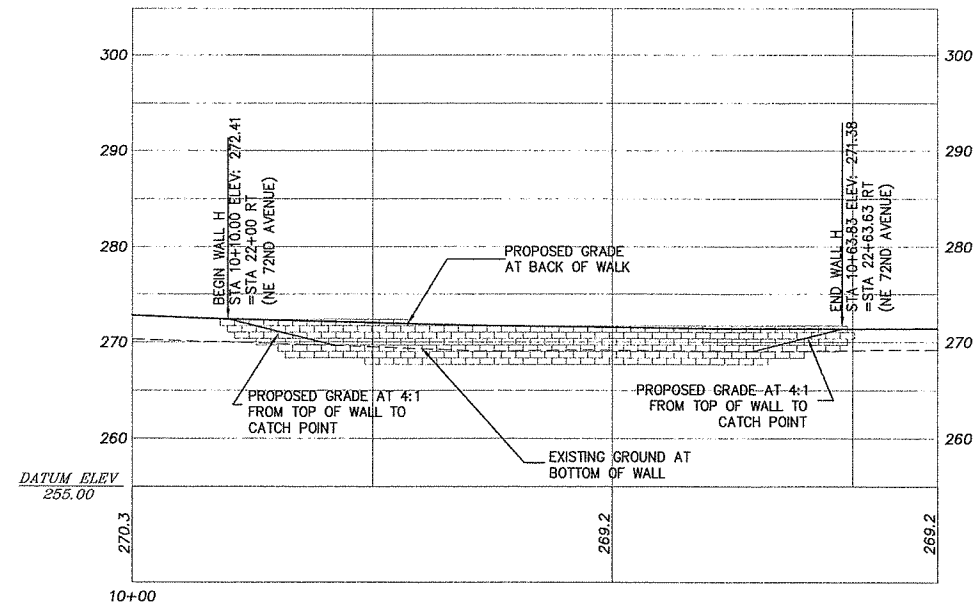

MODULAR BLOCK WALL "H"

SCALE: 1"=10' HORIZONTAL AND VERTICAL

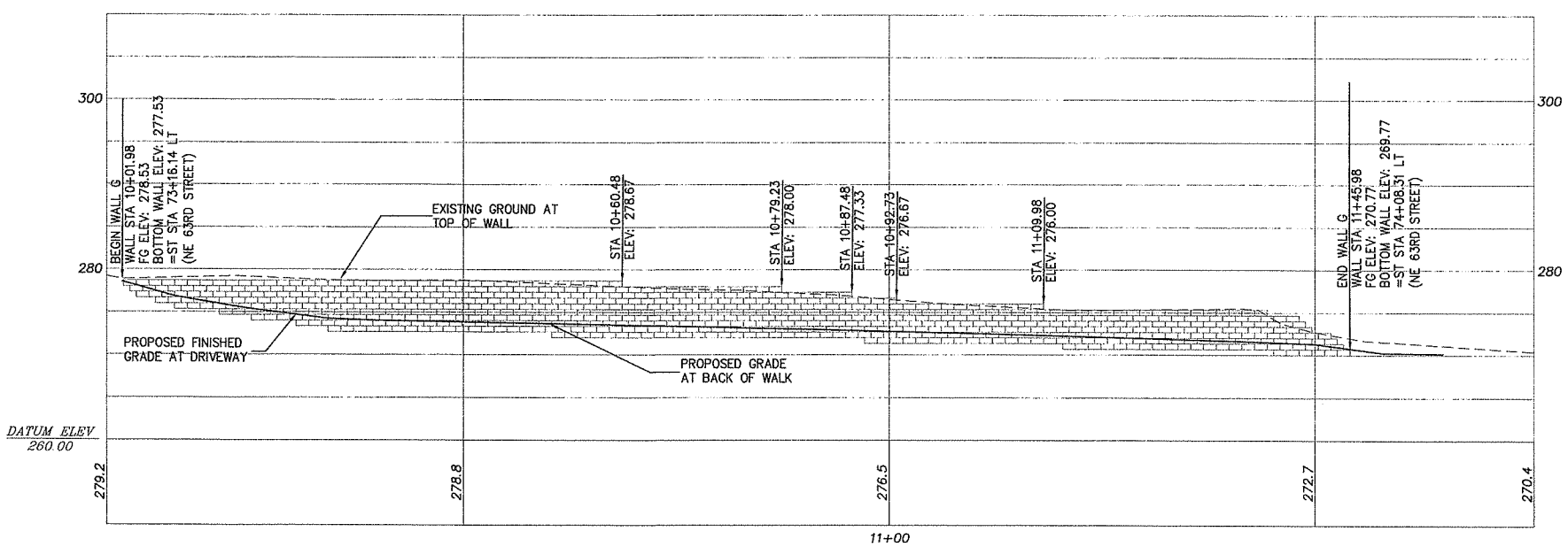

MODULAR BLOCK WALL "G"

SCALE: 1"=10' HORIZONTAL AND VERTICAL

NOTES:

1. SEE SHEET RW5 FOR WALL DETAILS
2. OFFSETS SHOWN IN PROFILE ARE FROM PROPOSED CENTERLINE TO BACK OF SIDEWALK.
3. INSTALL CHAIN LINK FENCE TYPE 6 (BLACK VINYL COATED) PER DETAIL SHEET RW5, FOR LENGTH OF WALL.

NOT FOR CONSTRUCTION

DESIGN & ENGINEERING DIVISION
NE 63RD STREET IMPROVEMENTS

RETAINING WALL PROFILES

DESIGNED: SLW
DRAWN: GME
CRP: 330422
HORIZ. 1" = 10'
VERT. 1" = 10'
DATE: 5/28/2004
DWG: RW3
SHEET 17 OF 63

CALL 48 HOURS BEFORE YOU DIG
1-800-424-5555
"It's the Law"
NORTHWEST UTILITIES NOTIFICATION CENTER

PAMELA WEDEMANN
STATE OF WASHINGTON
22440
REGISTERED PROFESSIONAL ENGINEER
EXPIRES AUG. 31, 2005

otak Incorporated
700 Washington St., Suite 401
Vancouver, WA 98660
Phone: (360) 737-8613
FAX: (360) 737-8651

proud past, promising future
CLARK COUNTY
WASHINGTON

:EF LIST
scale: 10
:solved
l44x001_border
l44x511
:W WASH

V: SHERYL 05/27/04 5:29pm --> V:\PROJECT\11900\11944\DWG\G445017.DWG

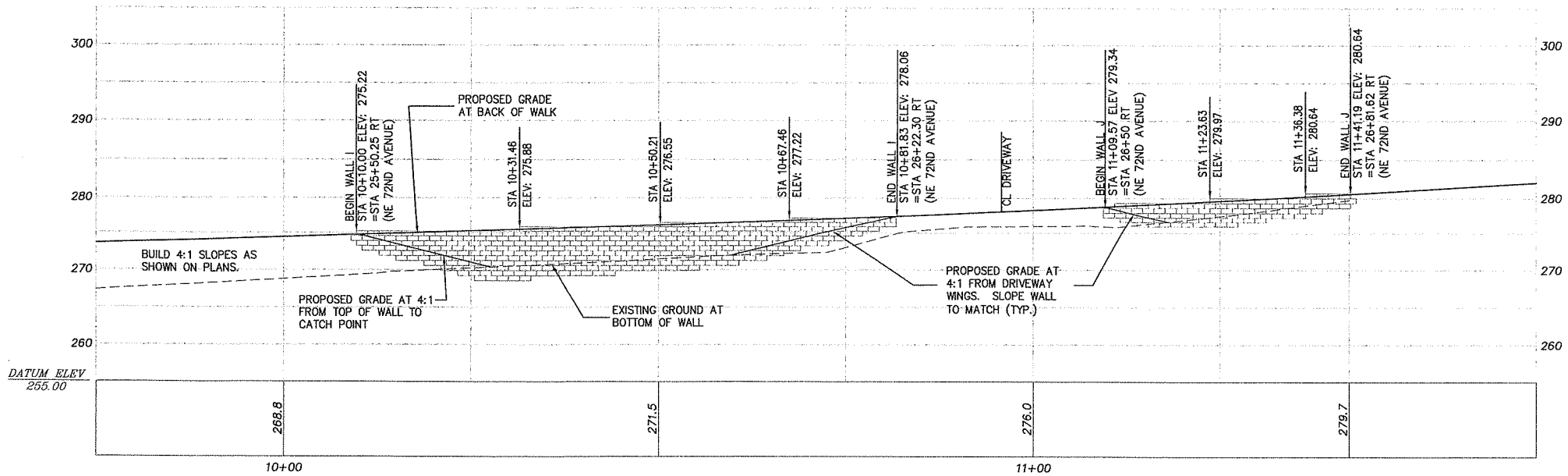

MODULAR BLOCK WALL "I," AND "J"

SCALE: 1"=10' HORIZONTAL AND VERTICAL

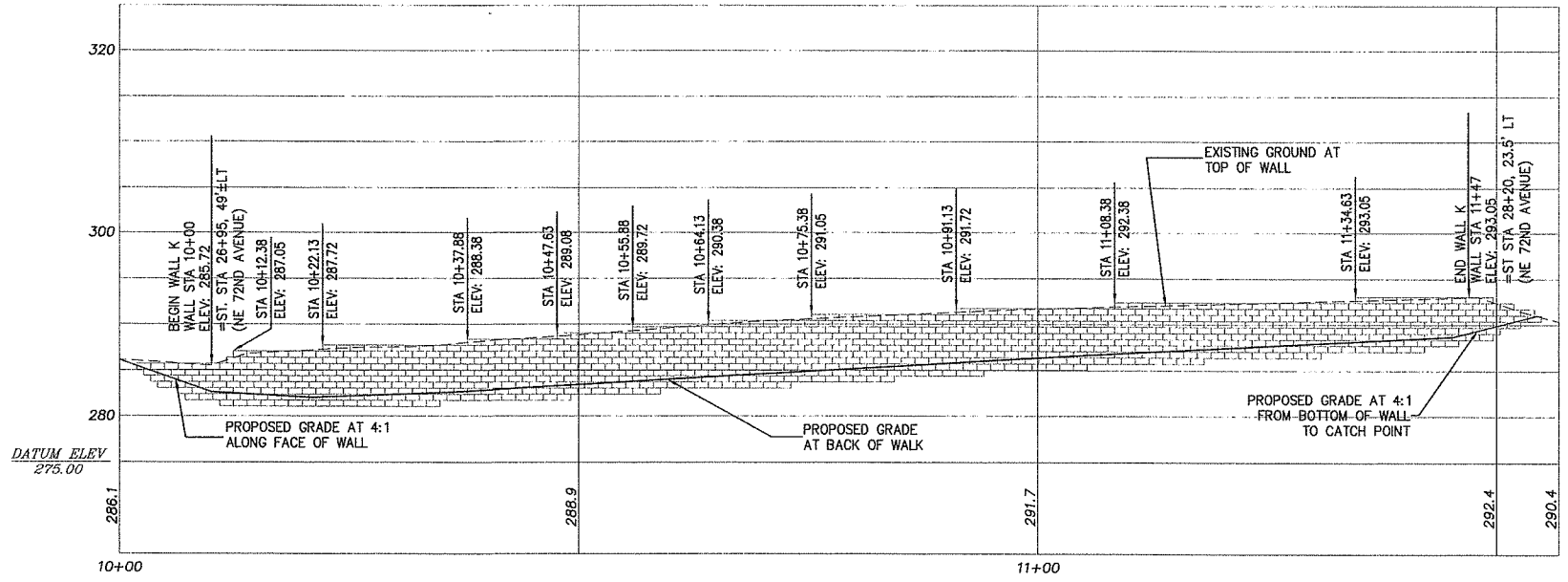

MODULAR BLOCK WALL "K"

SCALE: 1"=10' HORIZONTAL AND VERTICAL

NOTES:

1. SEE SHEET RW5 FOR WALL DETAILS
2. OFFSETS SHOWN IN PROFILE ARE FROM PROPOSED CENTERLINE TO BACK OF SIDEWALK.
3. INSTALL CHAIN LINK FENCE TYPE 6 (BLACK VINYL COATED) PER DETAIL SHEET RW5, FOR LENGTH OF WALL.

NOT FOR CONSTRUCTION

DESIGN & ENGINEERING DIVISION
NE 63RD STREET IMPROVEMENTS

RETAINING WALL PROFILES

proud past, promising future
CLARK COUNTY WASHINGTON

otak Incorporated
700 Washington St. Suite 401
Vancouver, WA 98660
Phone: (360) 737-9613
FAX: (360) 737-9651

DESIGNED: SLW
DRAWN: GME
CRP: 330422
HORIZ. 1" = 10'
VERT. 1" = 10'
DATE: 5/28/2004
DWG: RW4
SHEET 18 OF 63

CALL 48 HOURS BEFORE YOU DIG
1-800-424-5555
"It's the Law"
NORTHWEST UTILITIES NOTIFICATION CENTER

PAMELA M. EDDMANN
STATE OF WASHINGTON
22440
REGISTERED PROFESSIONAL ENGINEER
EXPIRES AUG. 31, 2005

REF LIST
scale: 10
resolved
H44x001_border
H44x511
SW WASH

V: SHERYL 05/27/04 5:29pm --> V:\PROJECT\11900\11944\DWG\C944S018.DWG

EF_LIST
scale: 1
solved
44x001_border
W WASH

GENERAL NOTES

Design criteria:

1. AASHTO Standard Specifications for Highway Bridges, 17th Ed., 2002
2. Factors of safety– Pullout 1.5
   Sliding 1.5
   Overturning 2.0
   Bearing 2.5
3. Wall foundations shall be designed for a maximum allowable bearing capacity of 2500 psf
4. Soil Properties– Retained Soil UW = 130 pcf, phi = 30 deg
   Granular Reinforced Backfill UW = 140 pcf phi = 35 deg
   Foundation Soil UW = 130 pcf phi = 30 deg
   Foundation soil in wetland areas UW = 120 pcf phi = 20 deg
5. Traffic live load surcharge on walls 6.5' or higher in a fill shall be 60 psf lateral pressure acting horizontally on back face of wall
6. Pedestrian live load surcharge shall be 85 psf acting vertically on sidewalk uniform for all walls in a fill situation.

Construction Methods:

1. All work shall conform to the Washington Department of Transportation Standard Specifications, 2004 Edition
2. The contractor shall verify the existence of utilities in the field prior to commencement of retaining wall work
3. The contractor is responsible to coordinate all construction of obstructions/appurtences/utilities/drainage systems with the construction of the retaining walls
4. Foundations of walls located in a wetland area shall be overexcavated approximately 18" below required embedment depth and backfilled with compacted crushed rock (WSDOT Standard Specifications Gravel Backfill for Walls 9–03.12(2)).
5. Walls not requiring soil reinforcement shall have a minimum 12" layer of crushed surfacing base course placed directly behind the back face of wall
6. All walls shall have a 6" dia PVC drainpipe wrapped in a geotextile fabric located as shown in cross section. Pipes to daylight at end of wall or be connected to storm drain system as shown in Plans.

Materials

1. Provide a minimum service life of 75 years for all components

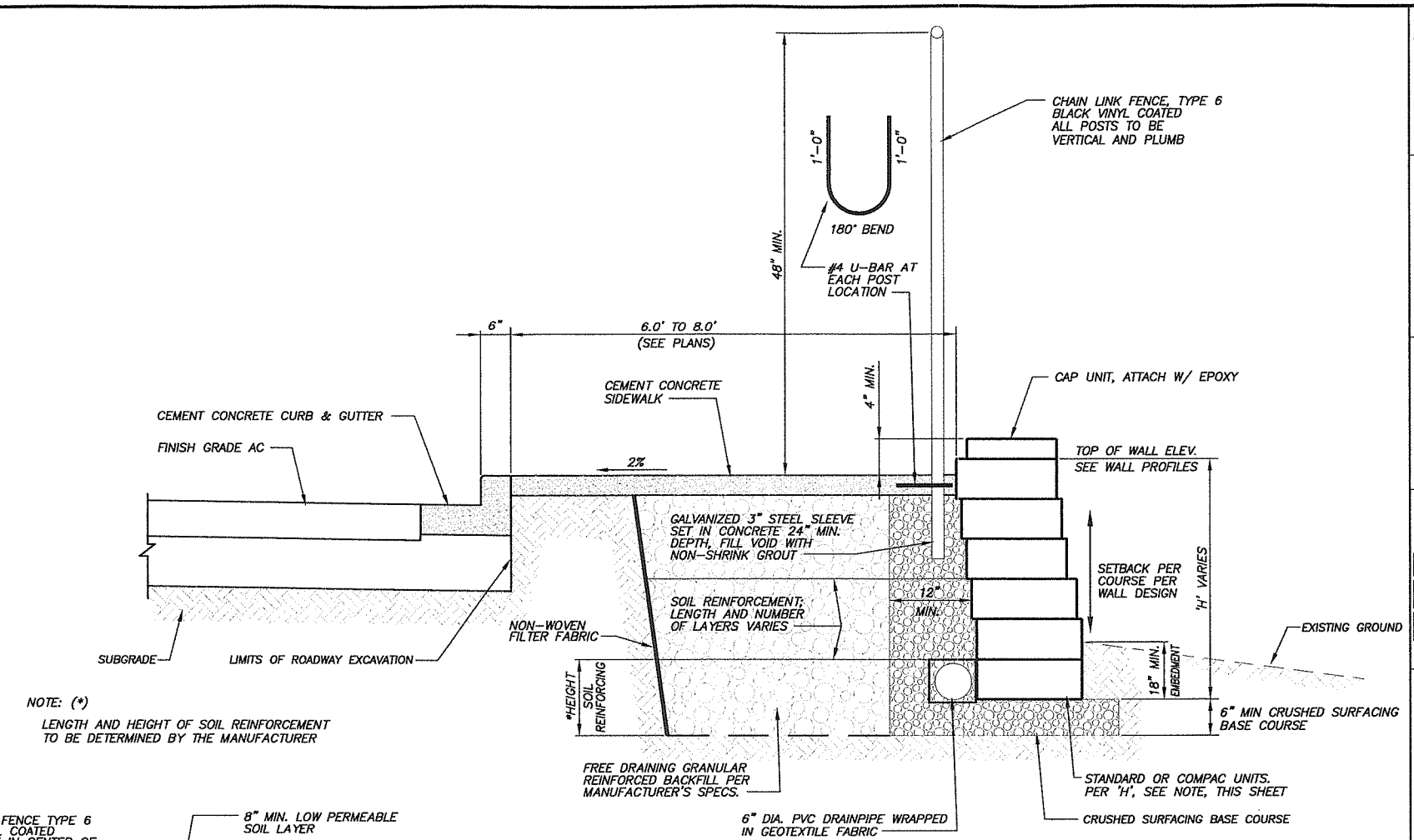

NOTE: (*)
LENGTH AND HEIGHT OF SOIL REINFORCEMENT TO BE DETERMINED BY THE MANUFACTURER

TYPICAL MODULAR BLOCK WALL (FILL)

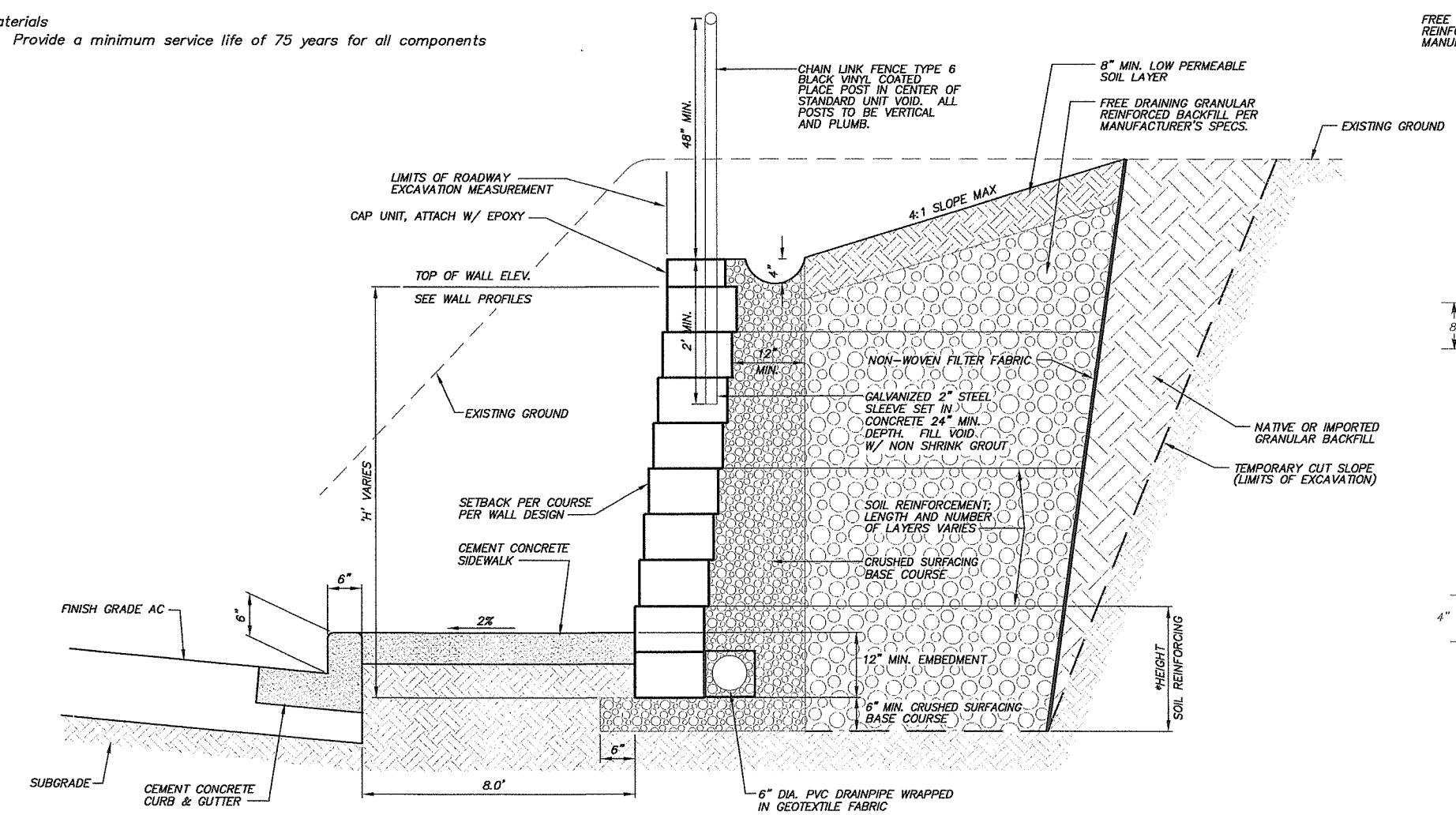

TYPICAL MODULAR BLOCK WALL (CUT)

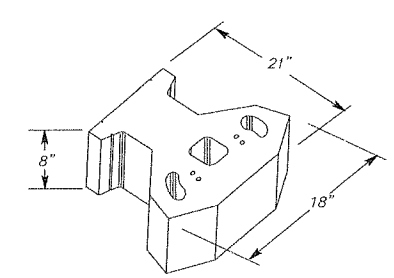

STANDARD UNIT

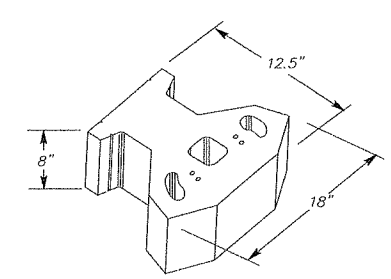

COMPAC UNIT

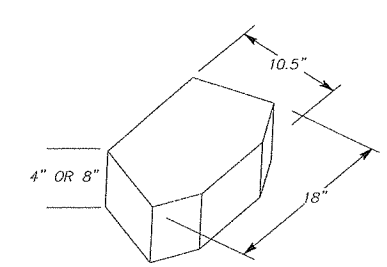

CAP UNIT

NOTES:
1. USE COMPAC UNITS WHERE "H"=3.0' MAX.
2. USE STANDARD UNITS WHERE "H" EXCEEDS 3.0'.

MASONRY BLOCKS
(KEYSTONE OR EQUIVALENT)

NOT FOR CONSTRUCTION

DESIGNED: SLW
DRAWN: JRM
CRP: 330422
HORIZ. NA
VERT. NA
DATE: 5/28/2004
DWG: RW5
SHEET 19 OF 63

CALL 48 HOURS BEFORE YOU DIG 1-800-424-5555 "It's the Law" NORTHWEST UTILITIES NOTIFICATION CENTER

PAMELA M. LEDEMANN STATE OF WASHINGTON 22440 REGISTERED PROFESSIONAL ENGINEER EXPIRES AUG. 31, 2006

otak Incorporated
700 Washington St. Suite 401
Vancouver, WA 98660
Phone: (360) 737-9813
FAX: (360) 737-9651

DESIGN & ENGINEERING DIVISION
NE 63RD STREET IMPROVEMENTS

RETAINING WALL DETAILS

proud past, promising future
CLARK COUNTY WASHINGTON

V: SHERYL 05/27/04 5:30pm --> V:\PROJECT\11900\11944\DWG\C9445019.DWG

XREF LIST
Ltscale: 1
Resolved
C944X001_BORDER
C944X500
C944X600
MJRROADS
PKW WASH
ROADS
S944B101
S944B104
S944B106
TAXLOTS

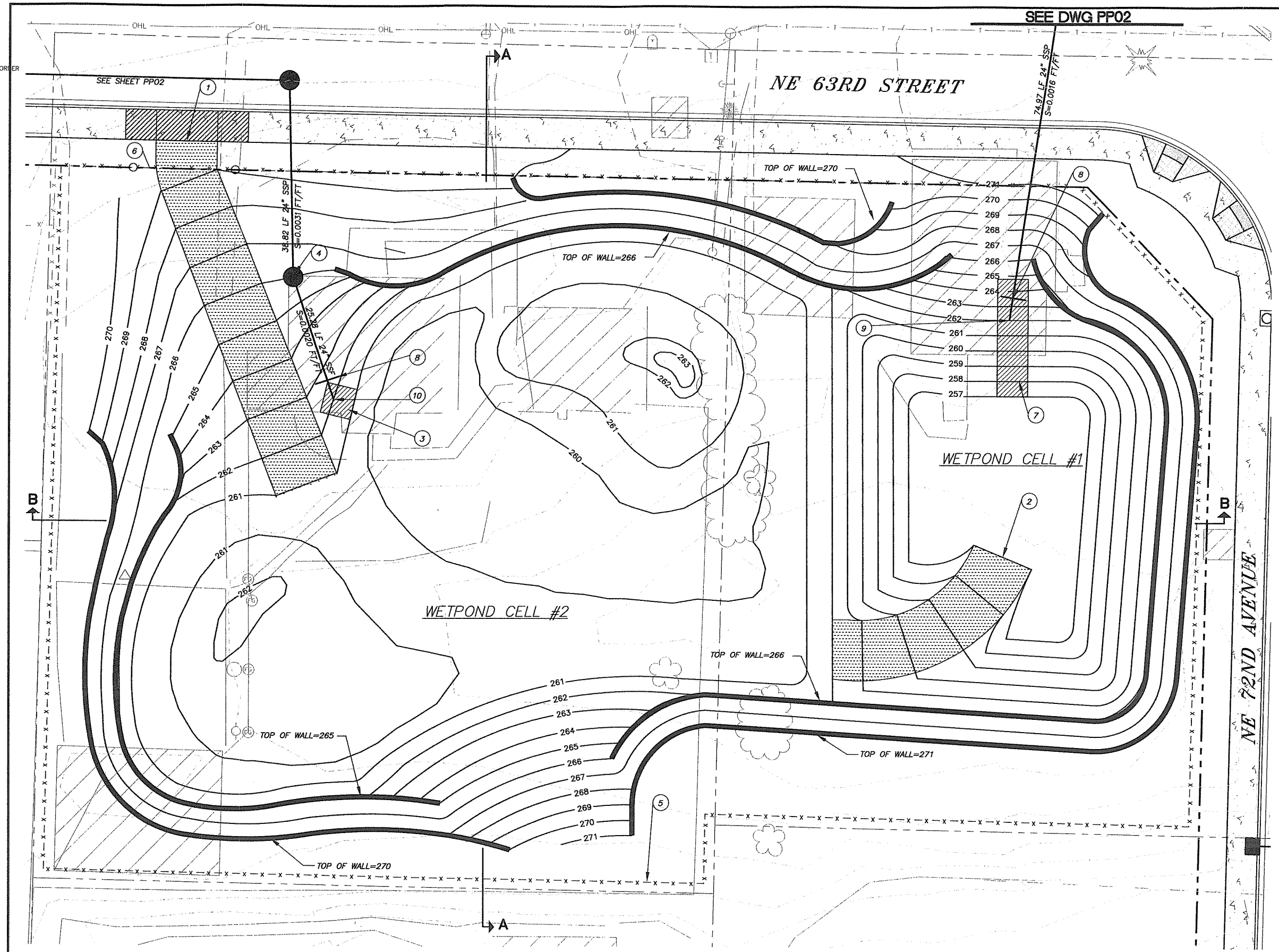

SCALE IN FEET
10 0 10 20

CONSTRUCTION NOTES

1. N.E. 63RD ST. STA. 34+08.07, 39.50' RT BEGIN MAINTENANCE ROAD AT 14.3% MAX GRADE (7H:1V) FROM SLOPE TO POND BOTTOM. CONSTRUCT TO LIMITS SHOWN. SEE MAINTENANCE ROAD DETAIL THIS SHEET.
2. END MAINTENANCE ROAD N.E. 63RD ST. STA. 35+69.52, 117.96' RT
3. 6' X 6' OUTFALL, CONSTRUCT OPEN CELL MASONRY GRID.
4. OUTLET CONTROL MANHOLE. SEE SHEET WQ2 FOR DETAILS.
5. INSTALL 710 LF± CHAIN LINK FENCE TYPE I (BLACK VINYL COATED), 2' INSIDE PROPERTY LINE.
6. 20' TYPE 1 CHAIN LINK GATE.
7. 23' X 6' OUTFALL, CONSTRUCT OPEN CELL MASONRY GRID.
8. CONCRETE PIPE ANCHOR. SEE SHEET WQ6.
9. POND INLET STA 35+69.93, 71.32' RT I.E. = 262.05
10. POND OUTET STA 34+37.84, 89.62' RT I.E. = 262.05

GENERAL NOTES

1. SEE SPECIAL PROVISIONS FOR CONSTRUCTION REQUIREMENTS. WETPOND CONSTRUCTION TO BE PERFORMED IN ACCORDANCE WITH SECTION V OF THE STORM WATER MANAGEMENT MANUAL FOR WESTERN WASHINGTON DATED AUGUST 2001.
2. REMOVE ALL TREES WITHIN FENCED LIMITS OF STORMWATER FACILITY.
3. SEE SHEET WQ2 FOR SECTION A–A AND B–B.
4. DEMOLISH AND REMOVE HOUSE AND OUT–BUILDINGS. DECOMMISSION UTILITIES AS DIRECTED.

PRELIMINARY DESIGN. GRADES TO BE VERIFIED AFTER SITE SPECIFIC GEOTECHNICAL INVESTIGATION IS PERFORMED IN JUNE 2004.

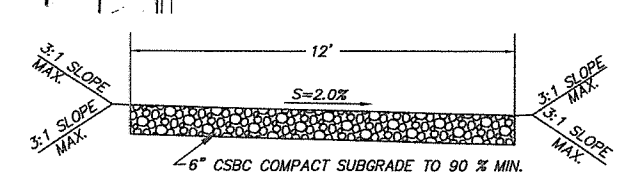

MAINTENANCE ROAD
N.T.S.

NOT FOR CONSTRUCTION

DESIGNED:	SC
DRAWN:	KW
CRP.	330422
HORIZ.	1" = 20'
VERT.	NA
DATE:	5/28/2004
DWG:	WQ1
SHEET	20 OF 63

CALL 48 HOURS BEFORE YOU DIG
1–800–424–5555
"It's the Law"
NORTHWEST UTILITY NOTIFICATION CENTER

PAUL A. WIEDEMANN
STATE OF WASHINGTON
22440
REGISTERED PROFESSIONAL ENGINEER
EXPIRES AUG. 31, 2005

oak Incorporated
700 Washington St., Suite 401
Vancouver, WA 98660
Phone: (360) 737-9613
FAX: (360) 737-9651

DESIGN & ENGINEERING DIVISION
NE 63RD STREET IMPROVEMENTS
STORMWATER FACILITY PLAN

proud past, promising future
CLARK COUNTY WASHINGTON

V: SHERYL 05/28/04 8:28am --> V:\PROJECT\11900\11944\DWG\C944S020.DWG

XREF LIST
Ltscale: 1
Resolved
C944X001_BORDER
PKW WASH

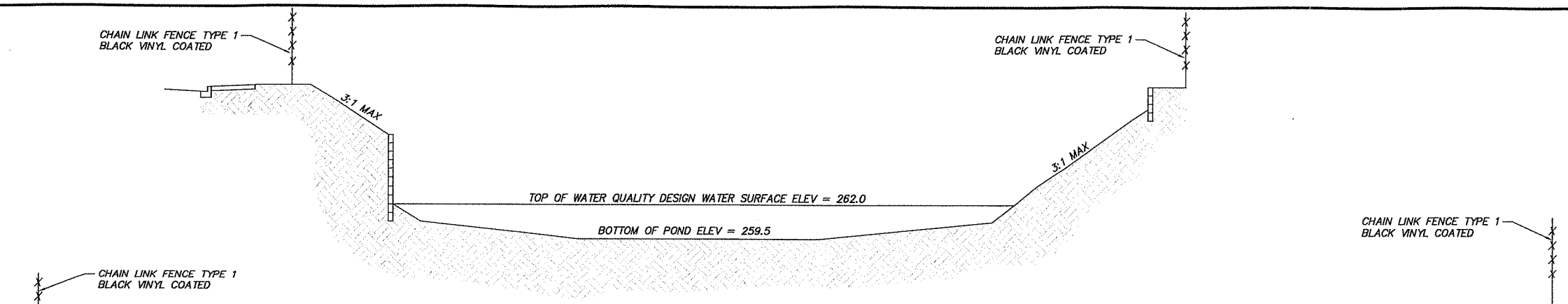

SECTION A-A

SCALE:
1"=10' HORIZONTAL
1"=4' VERTICAL

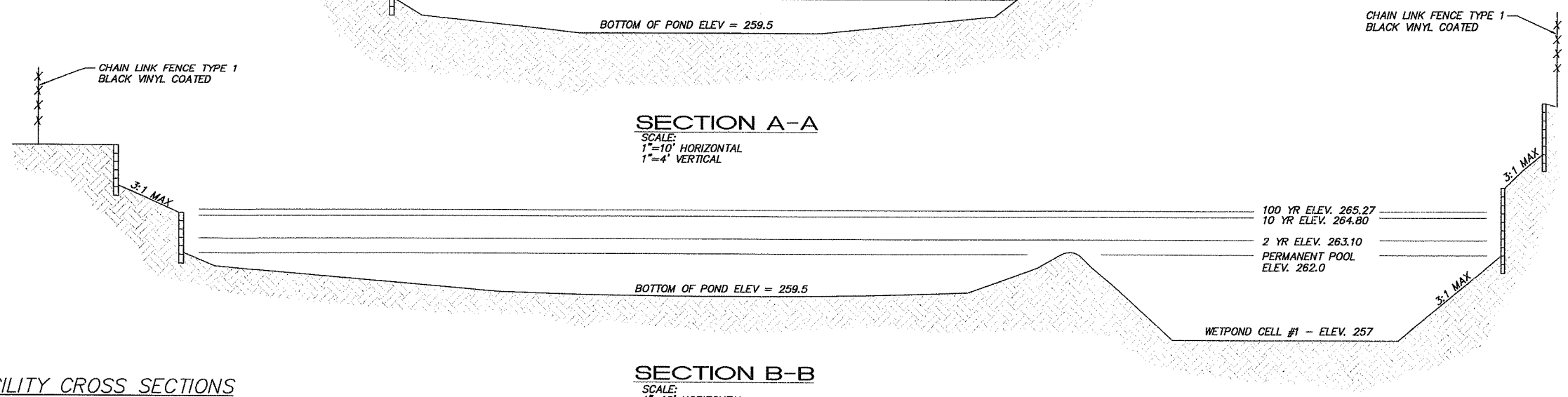

SECTION B-B

SCALE:
1"=10' HORIZONTAL
1"=4' VERTICAL

STORMWATER FACILITY CROSS SECTIONS

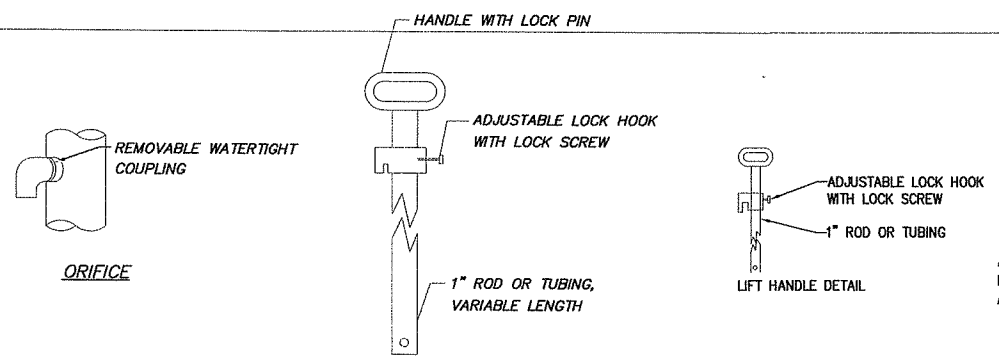

ORIFICE

LIFT HANDLE

LIFT HANDLE DETAIL

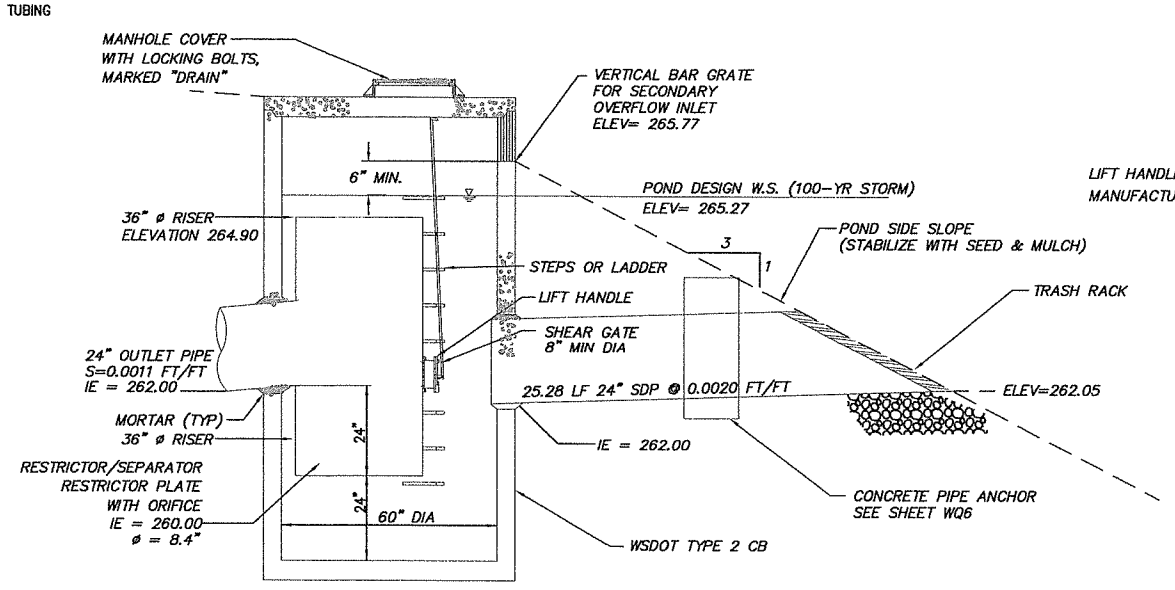

SECTION A-A

OUTLET CONTROL MANHOLE

NTS

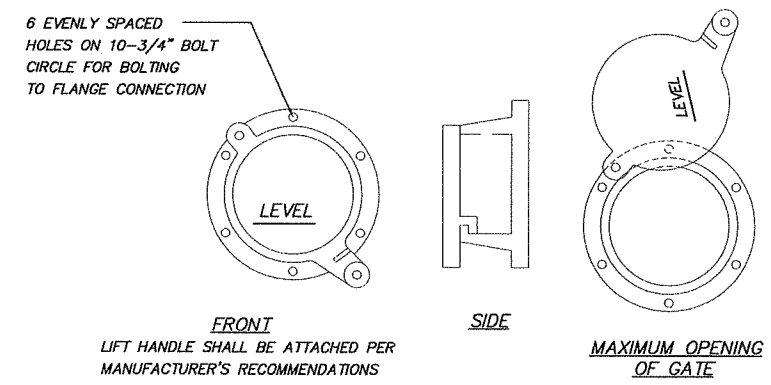

FRONT

LIFT HANDLE SHALL BE ATTACHED PER MANUFACTURER'S RECOMMENDATIONS

SIDE

MAXIMUM OPENING OF GATE

CLEANOUT/SHEAR GATE

N.T.S.

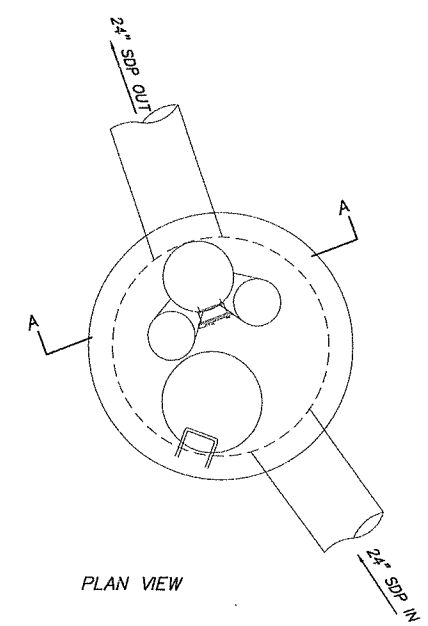

PLAN VIEW

NOTES

1. PIPE SUPPORTS AND RESTRICTOR/SEPARATOR SHALL BE CONSTRUCTED OF THE SAME MATERIAL AND BE ANCHORED AT A MAXIMUM SPACING OF 36". ATTACH PIPE SUPPORTS TO MANHOLE WITH 5/8" STAINLESS STEEL EXPANSION BOLTS OR EMBED SUPPORTS 2" INTO MANHOLE WALL.
2. THE VERTICAL RISER STEM OF THE RESTRICTOR/SEPARATOR SHALL BE THE SAME DIAMETER AS THE HORIZONTAL OUTLET PIPE, WITH A MINIMUM 8" DIAMETER.
3. THE FLOW RESTRICTOR/SEPARATOR SHALL BE FABRICATED FROM ONE OF THE FOLLOWING MATERIALS:
   0.60" CORRUGATED ALUMINUM ALLOY DRAIN PIPE
   0.64" CORRUGATED GALVANIZED OR ALUMINIZED STEEL DRAIN PIPE
   0.60" ALUMINUM ALLOY FLAT SHEET, IN ACCORDANCE WITH ASTM B 209M, 5052 H32 OR EPS GALVANIZED STEEL SHAL HAVE TREATMENT 1.
4. MULTI-ORIFICE ELBOWS MAY BE LOCATED AS SHOWN OR ALL ON ONE SIDE OF RISER TO ASSURE LADDER CLEARANCE. SIZE OF ELBOWS AND PLACEMENT TO BE SPECIFIED IN THE CONTRACT.
5. RESTRICTOR PLATE WITH ORIFICE AS SPECIFIED IN THE CONTRACT. OPENING IS TO BE CUT ROUND AND SMOOTH.
6. SHEAR GATE SHALL BE MADE OF ALUMINUM ALLOY IN ACCORDANCE WITH ASTM B 26M AND ASTM B 275, DESIGNATION ZG32A OR CAST IRON IN ACCORDANCE WITH ASTM A 48, CLASS 30B.
   LIFT HANDLE MAY BE SOLID ROD OR HOLLOW TUBING WITH ADJUSTABLE HOOK AS REQUIRED.
   NEOPRENE RUBBER GASKET REQUIRED BETWEEN RISER MOUNTING FLANGE AND GATE FLANGE.
   MATING SURFACES OF LID AND BODY SHALL BE MACHINED FOR PROPER FIT.
   FLANGE MOUNTING BOLTS SHALL BE 3/8" DIAMETER STAINLESS STEEL.
7. SHEAR GATE MAXIMUM OPENING SHALL BE CONTROLLED BY LIMITED HINGE MOVEMENT, STOP TAB OR SOME OTHER DEVICE.
8. ALTERNATE SHEAR GATE DESIGNS ARE ACCEPTABLE, IF MATERIAL SPECIFICATIONS ARE MET AND FLANGE BOLT PATTERN MATCHES.

DESIGNED:	SC
DRAWN:	KW
CRP:	330422
HORIZ.	NA
VERT.	NA
DATE:	5/28/2004
DWG:	WQ2
SHEET	21 OF 63

CALL 48 HOURS BEFORE YOU DIG
1-800-424-5555
"It's the Law"
NORTHWEST UTILITIES NOTIFICATION CENTER

STATE OF WASHINGTON
PAMELA K. WEIDEMANN
22440
REGISTERED PROFESSIONAL ENGINEER
EXPIRES AUG. 31, 2005

oak Incorporated
700 Washington St., Suite 401
Vancouver, WA 98660
Phone: (360) 737-9613
FAX: (360) 737-9651

DESIGN & ENGINEERING DIVISION
NE 63RD STREET IMPROVEMENTS

STORMWATER FACILITY DETAILS

NOT FOR CONSTRUCTION

proud past, promising future
CLARK COUNTY
WASHINGTON

V: SHERYL 05/27/04 5:32pm --> V:\PROJECT\11900\11944\DWG\C9445021.DWG

XREF LIST
Ltscale: 1
Resolved
C944x001_border
C944x500
C944x510
L944x701
Lasketch-2
PKW WASH
S944b101
S944b104
S944b106
S944B200

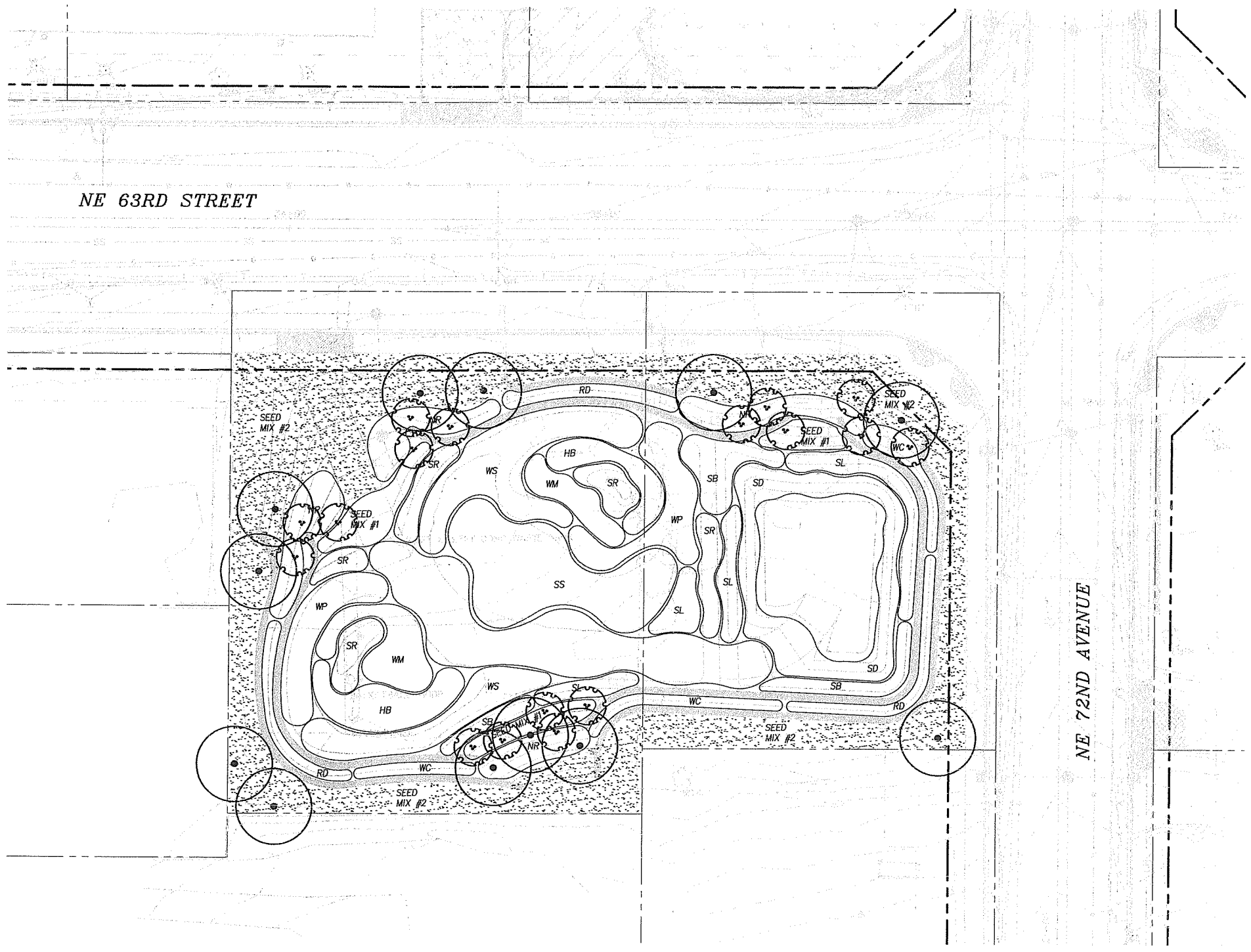

SCALE IN FEET
20 0 20 40

WETPOND PLANT LIST

CODE/ SYMBOL	COMMON NAME / Botanical name	SIZE / SPACING REMARKS
	DOUGLAS FIR *Pseudostuga menziesii*	6 FT. HT., B&B
	VINE MAPLE *Acer circinatum*	5 FT. HT., MULTI-STEM, B&B
HB	HARDSTEM BULRUSH *Scirpus acutus*	TUBER
NR	NOOTKA ROSE *Rosa nutkana*	2 GAL., 3 FT. O.C.
RC	RED FLOWERING CURRANT *Ribes sanguineum*	2 GAL., 3 FT. O.C.
RD	RED OSIER DOGWOOD *Cornus stolonifera*	2 GAL., 3 FT. O.C.
SB	SAWBEAK SEDGE *Carex stipata*	12 IN. O.C.
SD	SPATTERDOCK *Nuphar polysepalum*	12 IN. O.C.
SG	SPIKE BENT GRASS *Agrostis exarata*	SEED
SL	SLENDER RUSH *Juncus tenuis*	12 IN. O.C.
SR	SOFT RUSH *Juncus effusus*	12 IN. O.C.
SS	SLOUGH SEDGE *Carex obnupta*	12 IN. O.C.
WM	WESTERN MANNAGRASS *Glyceria occidentalis*	SEED
WP	WATER PARSLEY *Oenanthe sarmentosa*	12 IN. O.C.
WS	WESTERN SLOUGHGRASS *Beckmania syzigachne*	SEED

SEED MIX #1:

MEADOW FOXTAIL	40% BY WEIGHT
ALTA FESCUE	25%
REDTOP BENTGRASS	20%
REDTOP FESCUE	15%

SEED MIX #2:

RED FESCUE	35% BY WEIGHT
TALL FESCUE	35%
SILVERADO DWARF FESCUE	30%

SEEDING NOTE:
HYDROSEED APPLICATION PER 1000 S.F. TO INCLUDE 5 LBS. SEED, 7 LBS. FERTILIZER (10-20-20 NPK), 50 LBS. WOOD CELLULOSE FIBER MULCH.

NOT FOR CONSTRUCTION

DESIGN & ENGINEERING DIVISION
NE 63RD STREET IMPROVEMENTS
STORMWATER FACILITY
LANDSCAPE PLAN

CLARK COUNTY WASHINGTON
proud past, promising future

otak Incorporated
700 Washington St., Suite 401
Vancouver, WA 98660
Phone: (360) 737-9813
FAX: (360) 737-9851

STATE OF WASHINGTON REGISTERED LANDSCAPE ARCHITECT
DAVID D. HAYNES
CERTIFICATE NO. 824

CALL 48 HOURS BEFORE YOU DIG
1-800-424-5555
"It's the Law"
NORTHWEST UTILITIES NOTIFICATION CENTER

DESIGNED:	SC
DRAWN:	KW
CRP:	330422
HORIZ.	1" = 20'
VERT.	NA
DATE:	5/28/2004
DWG:	WO4
SHEET	23 OF 63

V: SHERYL 05/28/04 9:07am --> V:\PROJECT\11900\01944\DWG\C944S023.DWG

XREF LIST
Ltscale: 1
Resolved
C944X001_BORDER
PKW WASH

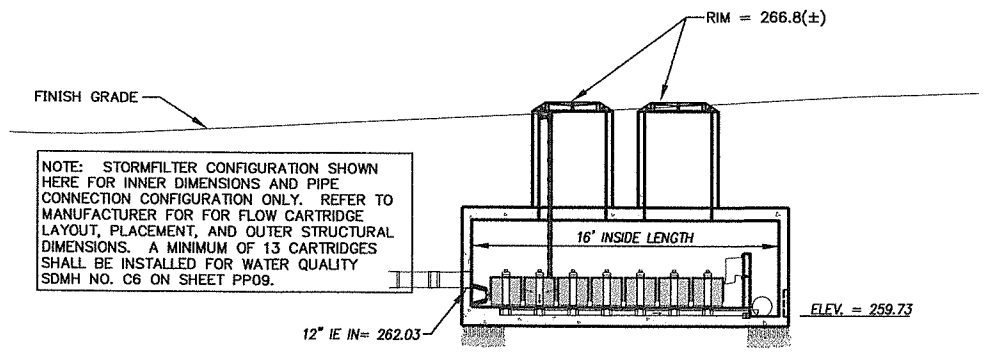

SECTION B–B

STORM FILTER™ WATER QUALITY SDMH NO. C6

NTS

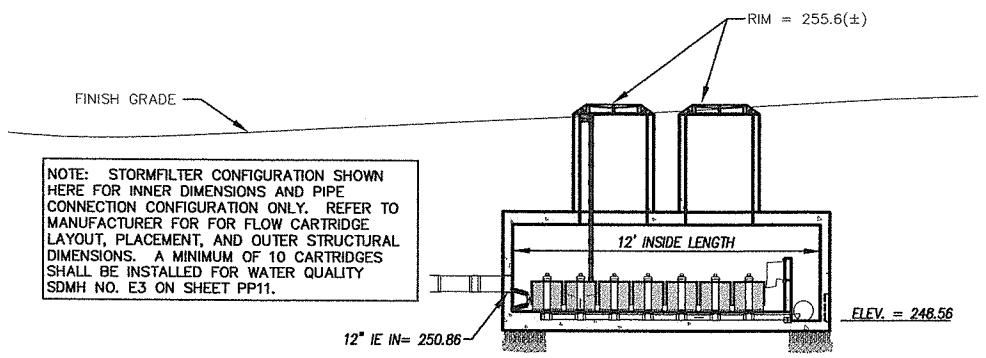

SECTION B–B

STORM FILTER™ WATER QUALITY SDMH NO. E3

NTS

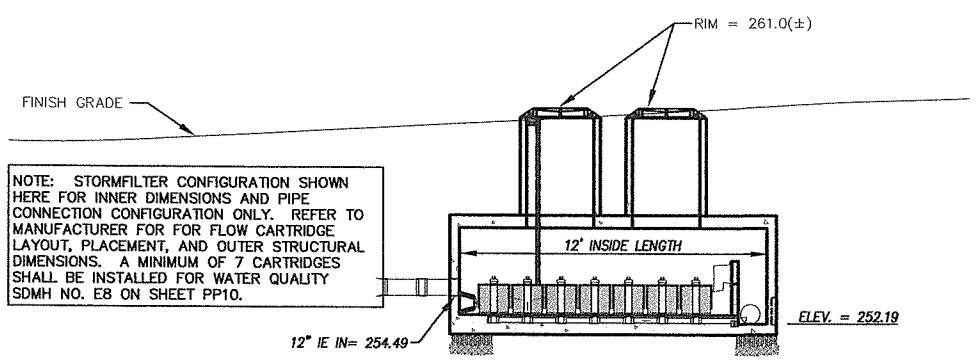

SECTION B–B

STORM FILTER™ WATER QUALITY SDMH NO. E8

NTS

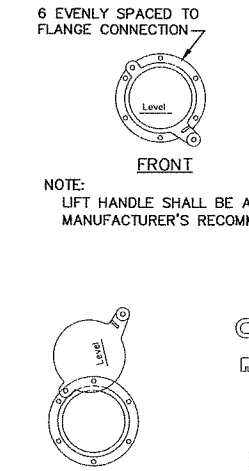

CLEANOUT/SHEAR GATE

NOT TO SCALE

ALTERNATIVES ARE ACCEPTABLE PROVIDED MATERIAL SPECIFICATIONS ARE MET AND FLANGE BOLT PATTERN MATCHES.

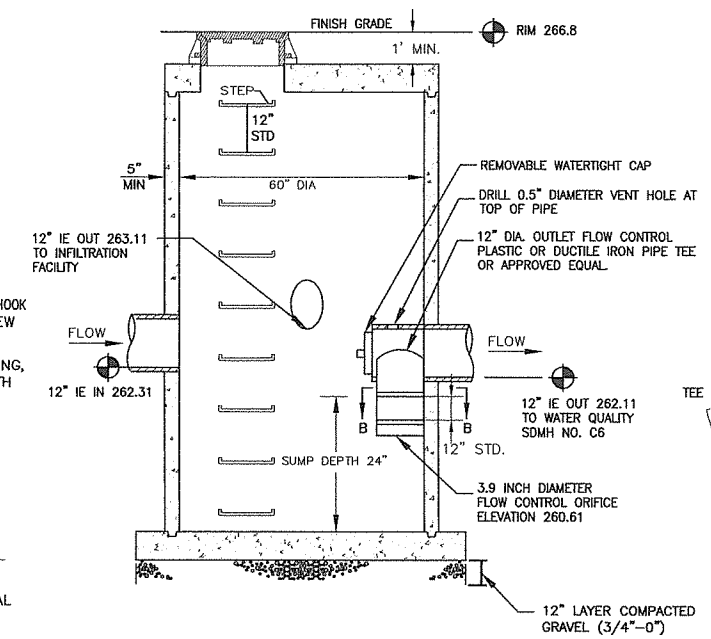

FLOW SPLITTER SDMH C7 TYPE 2 MANHOLE

NOT TO SCALE

SEE DWG PP09 FOR PLAN VIEW

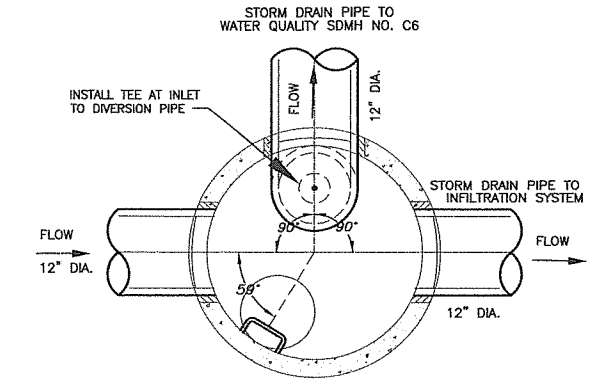

PLAN VIEW

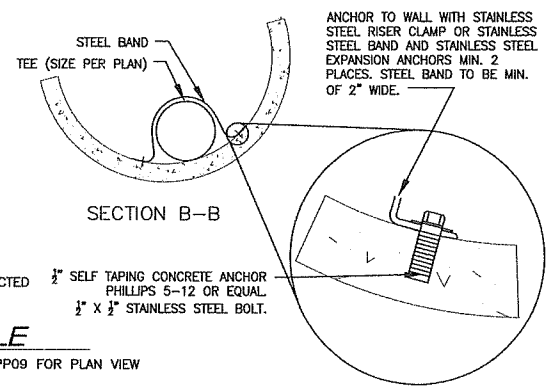

SECTION B–B

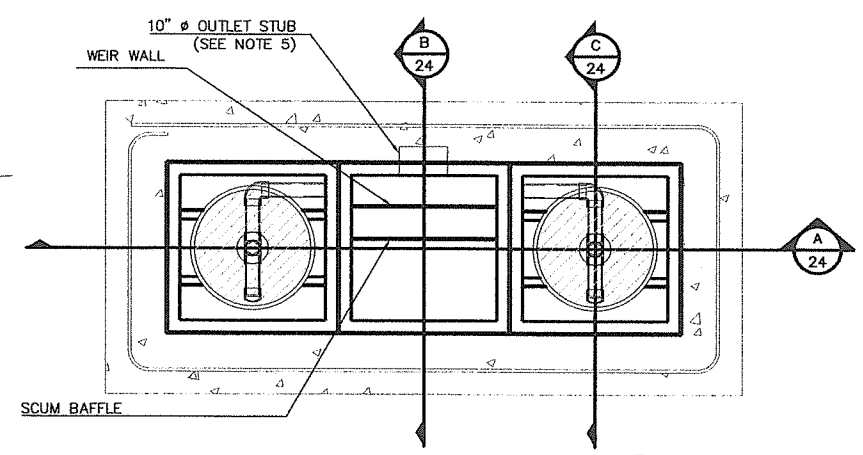

2–CART. CATCHBASIN – PLAN VIEW (1/24)

SCALE: N.T.S.

GENERAL NOTES

1.) STORMFILTER BY STORMWATER MANAGEMENT INC., PORTLAND, OREGON 800/548–4667.
2.) FILTERS TO BE SIPHON–ACTUATED AND SELF–CLEANING.
3.) STEEL STRUCTURE TO BE MANUFACTURED OF ¼" STEEL PLATE.
4.) STORMFILTER REQUIRES 2.3' OF DROP FROM RIM TO OUTLET. INLET (IF APPLICABLE) AND OUTLET PIPING TO BE SPECIFIED BY ENGINEER AND PROVIDED BY CONTRACTOR.
5.) CBSF EQUIPPED WITH 4" LONG STUBS FOR INLET (IF APPLICABLE) AND OUTLET PIPING. STANDARD OUTLET STUB IS 8" IN DIAMETER. CONNECTION TO COLLECTION PIPING CAN BE MADE USING FLEXIBLE COUPLING BY CONTRACTOR.
6.) FOR H–20 LOAD RATING, CONCRETE COLLAR IS REQUIRED. CONCRETE COLLAR WITH QUANTITY (2) #4 REINFORCING BARS TO BE PROVIDED BY CONTRACTOR.
7.) ALL STORMFILTERS REQUIRE REGULAR MAINTENANCE. REFER TO OPERATION AND MAINTENANCE GUIDELINES FOR DETAILS.
8.) STANDARD DETAIL SHOWS MAXIMUM NUMBER OF CARTRIDGES. EXACT NUMBER REQUIRED TO BE SPECIFIED ON SITE PLANS.

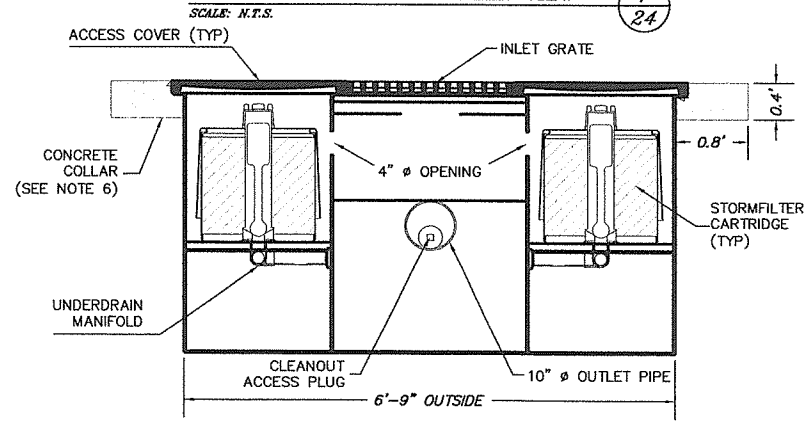

2–CART. CATCHBASIN – SECTION VIEW (A–A/24)

SCALE: N.T.S.

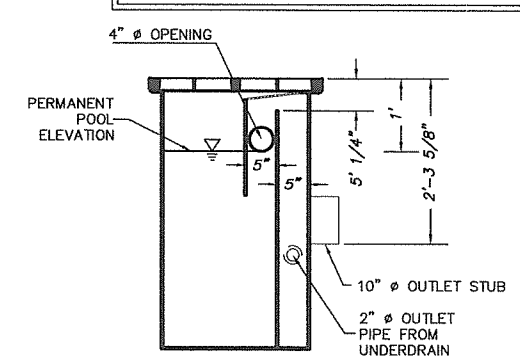

2–CART. CATCHBASIN – SECTION VIEW (B–B/24)

SCALE: N.T.S.

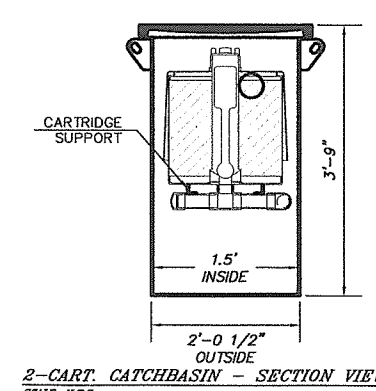

2–CART. CATCHBASIN – SECTION VIEW (C–C/24)

SCALE: N.T.S.

NOT FOR CONSTRUCTION

DESIGN & ENGINEERING DIVISION
NE 63RD STREET IMPROVEMENTS

WATER QUALITY CARTRIDGE DETAILS

DESIGNED:	SC
DRAWN:	KW
CRP:	330422
HORIZ.	1" = 20'
VERT.	NA
DATE:	5/28/2004
DWG:	W05
SHEET	24 OF 63

CALL 48 HOURS BEFORE YOU DIG 1–800–424–5555 "It's the Law" NORTHWEST UTILITIES NOTIFICATION CENTER

STATE OF WASHINGTON PAMELA K. E. WEIDEMANN REGISTERED PROFESSIONAL ENGINEER 22440 EXPIRES AUG. 31, 2005

oak Incorporated
700 Washington St., Suite 401
Vancouver, WA 98660
Phone: (360) 737–8613
FAX: (360) 737–9651

proud past, promising future
CLARK COUNTY WASHINGTON

V: SHERYL 05/27/04 5:33pm --> V:\PROJECT\11900\11944\DWG\C944S024.DWG

XREF LIST
Ltscale: 1
Resolved
C944X001_BORDER
PKW WASH

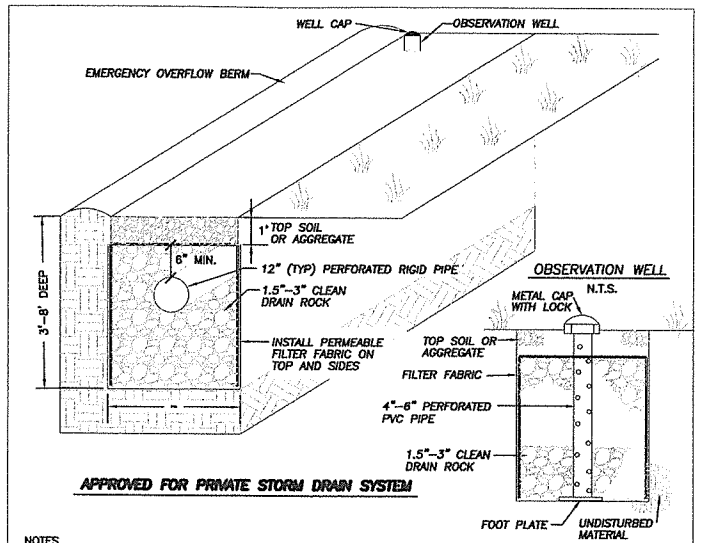

APPROVED FOR PRIVATE STORM DRAIN SYSTEM

NOTES
1. AGGREGATE SHALL BE COMPLETELY ENCASED IN ENGINEERING GEOTEXTILE MATERIAL. IN THE CASE OF AN AGGREGATE SURFACE, GEOTEXTILE SHOULD SURROUND ALL OF THE AGGREGATE FILL MATERIAL EXCEPT FOR THE TOP ONE-FOOT, WHICH IS PLACED OVER THE GEOTEXTILE.

2. THE INFILTRATION TRENCH IS GENERALLY USED FOR SMALL DRAINAGE AREAS, AN EMERGENCY SPILLWAY MAY NOT BE NECESSARY. HOWEVER, AN OVERFLOW OUTLET MAY BE REQUIRED TO BE PROVIDED.

3. AN OBSERVATION WELL SHOULD BE INSTALLED AT THE LOWER END OF THE INFILTRATION TRENCH TO CHECK WATER LEVELS, DRAWDOWN TIME, SEDIMENT ACCUMULATION, AND CONDUCT WATER QUALITY MONITORING. FOR LARGER TRENCHES A 12"-36" WELL CAN BE INSTALLED TO FACILITATE MAINTENANCE OPERATIONS SUCH AS PUMPING OUT OF SEDIMENT. THE TOP OF THE WELL IS TO BE CAPPED TO DISCOURAGE VANDALISM AND TAMPERING. PUBLIC INFILTRATION TRENCH REQUIRES A CLEANOUT TO BE INSTALLED AT END OF PERFORATED PIPE.

4. THE STONE AGGREGATE IS TO BE PLACED IN LIFTS AND COMPACTED USING PLATE COMPACTORS. THE MAXIMUM LOOSE LIFT THICKNESS IS TO BE 12".

5. FOLLOWING THE STONE AGGREGATE PLACEMENT, THE GEOTEXTILE MUST BE FOLDED OVER THE TOP TO FORM A 12" MINIMUM LONGITUDINAL OVERLAP. THE UPSTREAM ROLL SHALL OVERLAP A MINIMUM OF 2' OVER THE DOWNSTREAM ROLL. (PROVIDE SHINGLE AFFECT).

6. VOIDS BETWEEN THE GEOTEXTILE AND THE EXCAVATION SIDES MUST BE AVOIDED.

7. IF VERTICALLY EXCAVATED WALLS BECOME DIFFICULT TO MAINTAIN, USE TRAPEZOIDAL SECTION.

NO.	REVISIONS	DATE	BY

DWG: D12.DWG

Department of Public Works
CLARK COUNTY WASHINGTON
proud past, promising future

INFILTRATION TRENCH PRIVATE
APPROVED
COUNTY ENGINEER — DATE 01/01/04
STANDARD D12
PLAN No.
DESIGNED SCH
DRAWN SCH
DATE 10/03/02

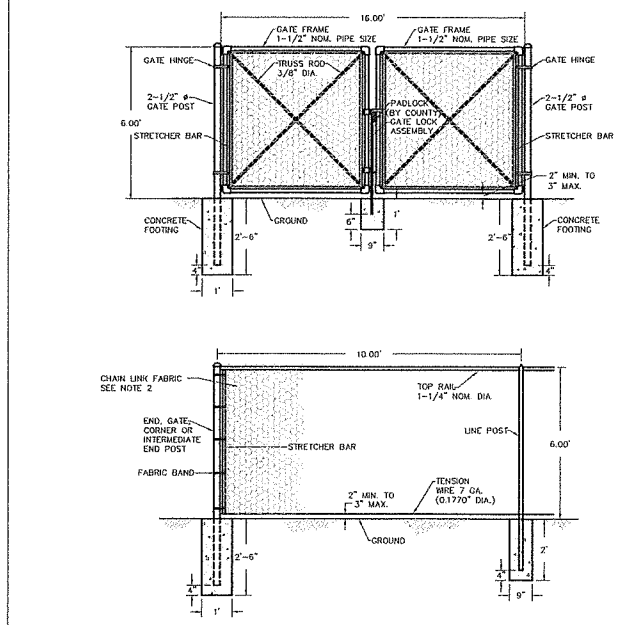

NOTES:
1. ALL MATERIAL AND WORKMANSHIP SHALL BE IN ACCORDANCE WITH THE CURRENT STATE OF WASHINGTON STANDARD SPECIFICATIONS FOR ROAD, BRIDGE, AND MUNICIPAL CONSTRUCTION
2. CHAIN LINK FENCE FABRIC TO MEET OR EXCEED REQUIREMENTS OF WSDOT SPECIFICATION 9.16.1(7) FOR TYPE 1 FENCE (9 GA) 2" DIAMOND.

NO.	REVISIONS	DATE	BY

ENG: D26.DWG

Department of Public Works
CLARK COUNTY WASHINGTON
proud past, promising future

STORMWATER FACILITY CHAIN LINK FENCE
APPROVED
COUNTY ENGINEER — DATE 01/01/04
STANDARD D26
PLAN No.
DESIGNED SCH
DRAWN SCH
DATE 10/04/02

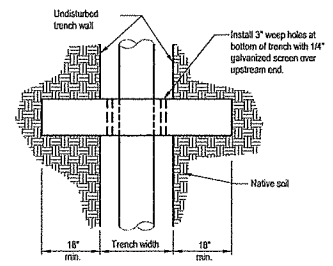

PLAN

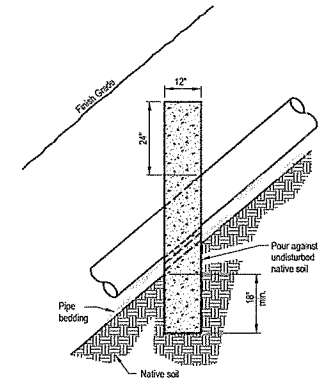

SECTION

NOTES:

1. Concrete anchor walls (Commercial Grade Concrete) shall be constructed using forms when sewers, storm drains and other pipelines are constructed with slopes 20% or greater. Remove forms prior to backfilling trench.

CONCRETE PIPE ANCHOR DETAIL

N.T.S.

DESIGNED:	SC
DRAWN:	KW
CRP:	330422
HORIZ.	
VERT.	NA
DATE:	5/28/2004
DWG:	W06
SHEET	25 OF 63

CALL 48 HOURS BEFORE YOU DIG
1-800-424-5555
"It's the Law"
NORTHWEST UTILITIES NOTIFICATION CENTER

PAMELA K. MIEDEMANN — STATE OF WASHINGTON — 22440 — PROFESSIONAL ENGINEER
EXPIRES AUG. 31, 2005

otak Incorporated
700 Washington St., Suite 401
Vancouver, WA 98660
Phone: (360) 737-8613
FAX: (360) 737-9601

DESIGN & ENGINEERING DIVISION
NE 63RD STREET IMPROVEMENTS
STORMWATER FACILITY DETAILS

NOT FOR CONSTRUCTION

proud past, promising future
CLARK COUNTY WASHINGTON

V: SHERYL 05/27/04 5:34pm --> V:\PROJECT\11900\11944\DWG\C9445025.DWG

V: SHERYL 05/27/04 4:40pm --> V:\PROJECT\11900\11944\DWG\C944S026.DWG

REF LIST
tscale: 20
esolved
944x001_border
944x500
944x510
KW WASH
944b104
944b106
944B200

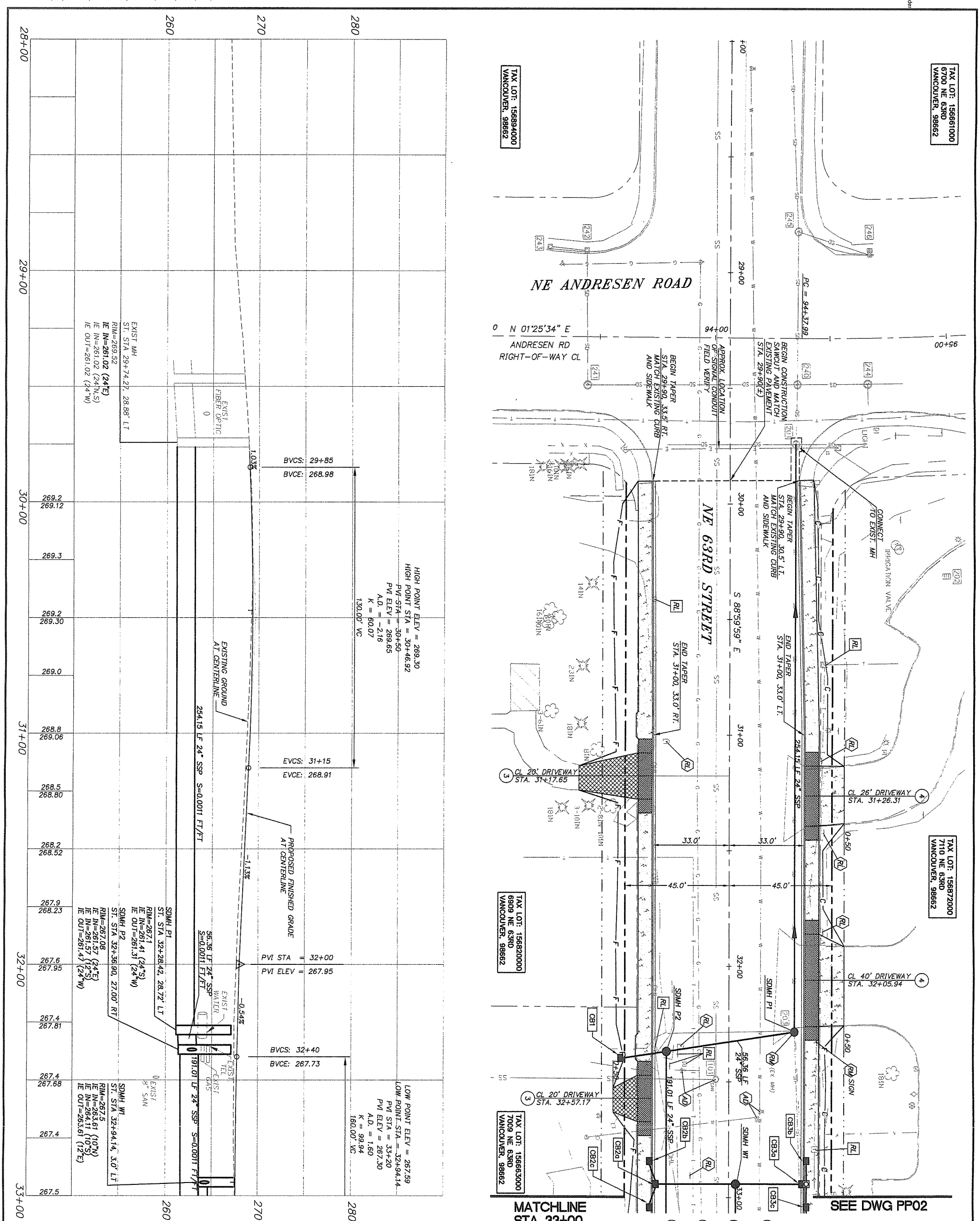

CONSTRUCTION NOTES

1. CONSTRUCT TYPE 1 CEMENT CONCRETE DRIVEWAY APPROACH PER CLARK COUNTY STD. PLAN NO. F14
2. CONSTRUCT TYPE 2 CEMENT CONCRETE DRIVEWAY APPROACH PER CLARK COUNTY STD. PLAN NO. F15
3. CONSTRUCT TYPE 3 CEMENT CONCRETE DRIVEWAY APPROACH PER CLARK COUNTY STD. PLAN NO. F16
4. CONSTRUCT 6" THICK REINFORCED CONCRETE APPROACH W/ #4 REBAR AT 6" O.C.

CURB INLET INFORMATION

CB1 DITCH INLET
ST. STA. 32+39.74, 46.83' RT
RIM ELEV. = 266.05
I.E. (OUT) = 262.55
19 LF 12" STM. PIPE
S=0.0516 FT/FT

CB2a TYPE 1 CATCH BASIN
ST. STA. 32+94.14, 33.00' RT
T.C. ELEV. = 267.27
I.E. (IN) = 264.42
I.E. (OUT) = 264.42
36 LF 10" DIP
S=0.0086 FT/FT

CB2b CURB INLET
ST. STA. 32+84.18, 33.00' RT
T.C. ELEV. = 267.27
I.E. (OUT) = 264.52
10 LF 10" STM. PIPE
S=0.0100 FT/FT

CB2c CURB INLET
ST. STA. 33+04.18, 33.00' RT
T.C. ELEV. = 267.27
I.E. (OUT) = 264.52
10 LF 10" STM. PIPE
S=0.0100 FT/FT

CB3a COMBINATION CURB INLET
ST. STA. 32+94.14, 33.00' LT
T.C. ELEV. = 267.27
I.E. (IN) = 263.92
I.E. (OUT) = 263.92
30 LF 10" DIP
S=0.0103 FT/FT

CB3b CURB INLET
ST. STA. 32+84.18, 33.00' LT
T.C. ELEV. = 267.27
I.E. (OUT) = 264.02
10 LF 10" STM. PIPE
S=0.0100 FT/FT

CB3c CURB INLET
ST. STA. 33+04.17, 33.00' LT
T.C. ELEV. = 267.27
I.E. (IN) = 264.02
I.E. (OUT) = 264.02
10 LF 10" STM. PIPE
S=0.0100 FT/FT

SCALE IN FEET: 20 0 20 40

BY: CONTRACTOR; CITY/COUNTY FORCES; OTHERS

REMOVED	= RM
RELOCATED	= RL
ABANDONED	= AB
REPLACED & RELOCATED	= RP
RELOCATED & ADJUSTED TO GRADE	= RA
ADJUSTED TO GRADE	= AD
TRIMMED	= T
OBJECT TO BE:	

NOT FOR CONSTRUCTION

CLARK COUNTY WASHINGTON — proud past, promising future

DESIGN & ENGINEERING DIVISION
NE 63RD STREET IMPROVEMENTS

PLAN AND PROFILE – NE 63RD STREET
STA. 28+00 TO STA. 33+00

otak Incorporated
700 Washington St., Suite 401
Vancouver, WA 98660
Phone: (360) 737-9613
FAX: (360) 737-9651

PAMELA KIEL WIEDEMANN — STATE OF WASHINGTON — 22440 — REGISTERED PROFESSIONAL ENGINEER — EXPIRES: AUG. 31, 2005

CALL 48 HOURS BEFORE YOU DIG 1-800-424-5555 "It's the Law"
NORTHWEST UTILITIES NOTIFICATION CENTER

DESIGNED:	SLW
DRAWN:	JRM
CRP:	330422
HORIZ.	1" = 20'
VERT.	1" = 5'
DATE:	5/28/2004
DWG:	PP01
SHEET	26 OF 63

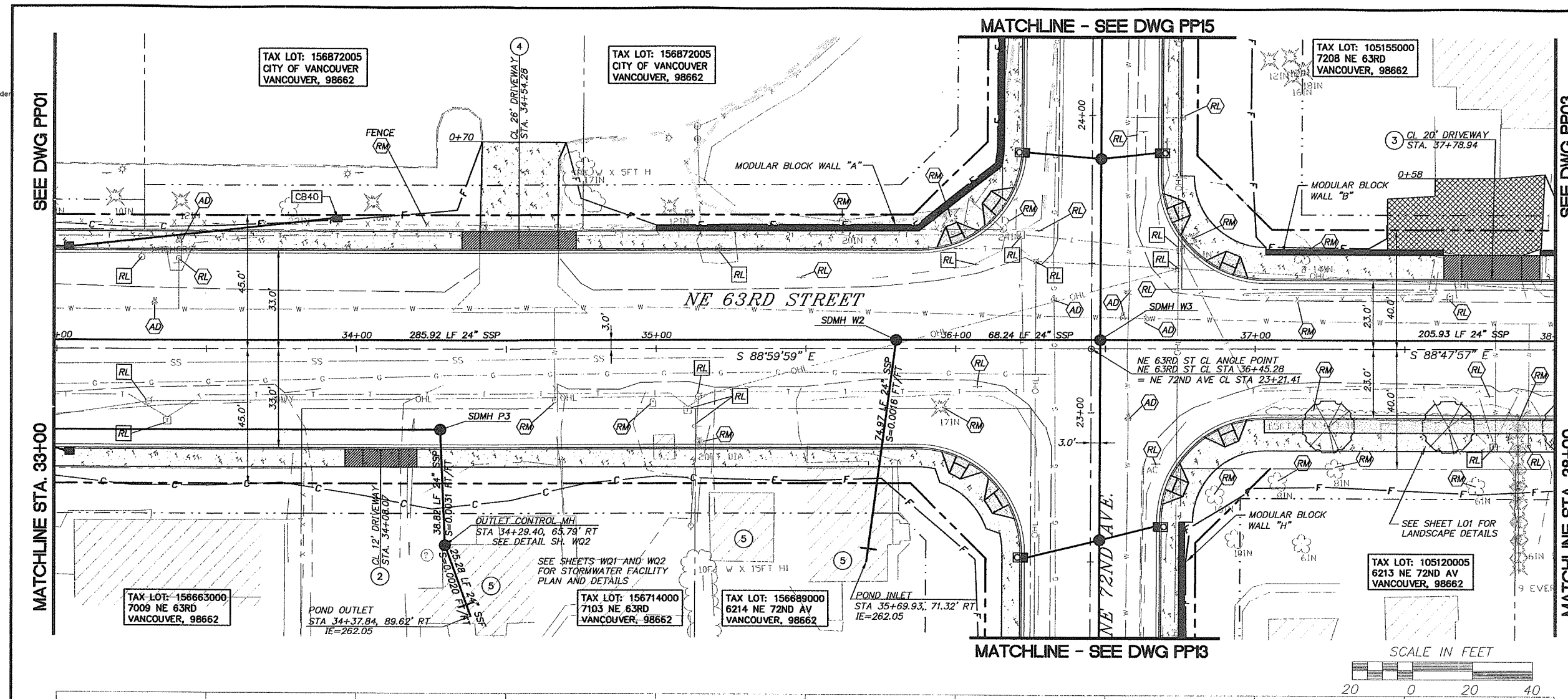

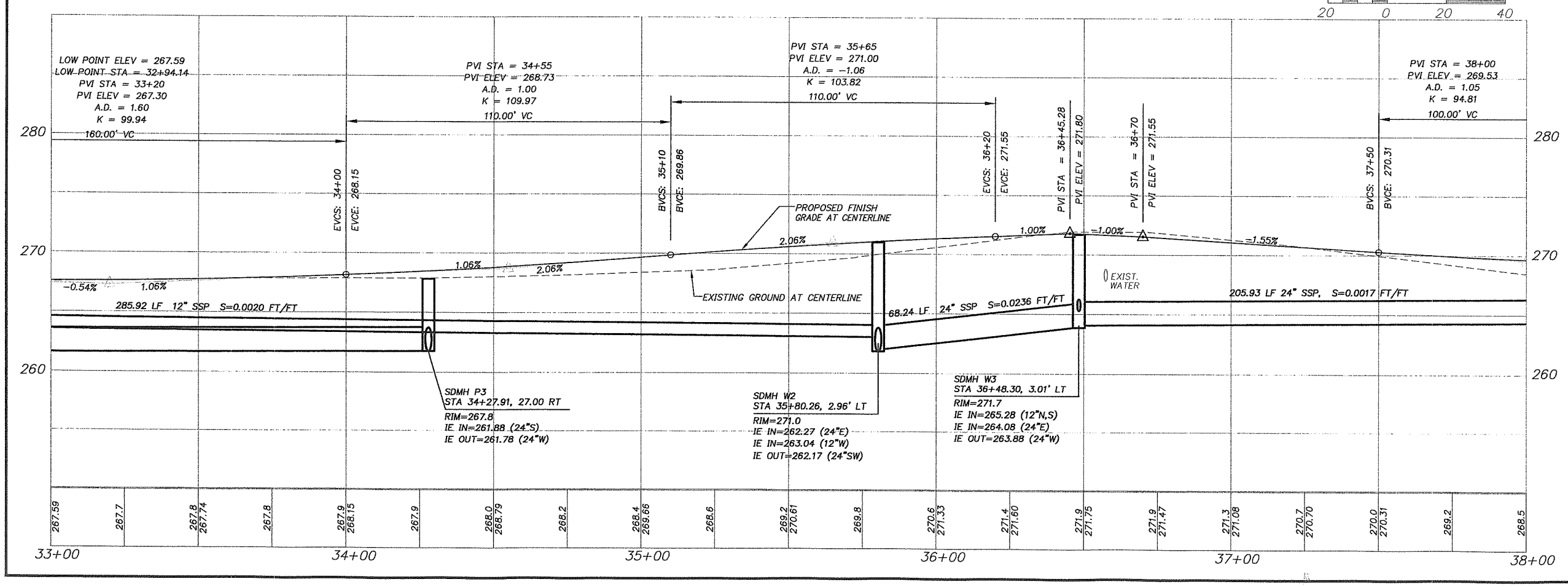

CONSTRUCTION NOTES

1. CONSTRUCT TYPE 1 CEMENT CONCRETE DRIVEWAY APPROACH PER CLARK COUNTY STD. PLAN NO. F14
2. CONSTRUCT TYPE 2 CEMENT CONCRETE DRIVEWAY APPROACH PER CLARK COUNTY STD. PLAN NO. F15
3. CONSTRUCT TYPE 3 CEMENT CONCRETE DRIVEWAY APPROACH PER CLARK COUNTY STD. PLAN NO. F16
4. CONSTRUCT 6" THICK REINFORCED CONCRETE APPROACH W/ #4 REBAR @ 6" O.C.
5. DEMOLISH AND REMOVE HOUSES AND OUT BUILDINGS. DECOMMISSION UTILITIES AS DIRECTED.

CURB INLET INFORMATION

SEE SHEETS PP01 AND PP14 FOR CURB INLET INFORMATION

CB40 DITCH INLET
ST. STA. 33+93.66, 43.88' LT
RIM ELEV. = 267.10
I.E. (OUT) = 264.45
90 LF 10" STM. PIPE
S=0.0048 FT/FT

OBJECT TO BE:

REMOVED	= RM
RELOCATED	= RL
ABANDONED	= AB
REPLACED & RELOCATED	= RP
RELOCATED & ADJUSTED TO GRADE	= RA
ADJUSTED TO GRADE	= AD
TRIMMED	= T

BY: CONTRACTOR / CITY/COUNTY FORCES / OTHERS

NOT FOR CONSTRUCTION

DESIGNED:	SLW
DRAWN:	JRM
CRP:	330422
HORIZ.	1" = 20'
VERT.	1" = 5'
DATE:	5/28/2004
DWG:	PP02
SHEET	27 OF 63

CALL 48 HOURS BEFORE YOU DIG 1-800-424-5555 "It's the Law" NORTHWEST UTILITIES NOTIFICATION CENTER

PAMELA K. WIEDEMANN STATE OF WASHINGTON 22440 REGISTERED PROFESSIONAL ENGINEER EXPIRES JULY 31, 2005

otak Incorporated
700 Washington St., Suite 401
Vancouver, WA 98660
Phone: (360) 797-9613
FAX: (360) 737-9501

DESIGN & ENGINEERING DIVISION
NE 63RD STREET IMPROVEMENTS
PLAN AND PROFILE - NE 63RD STREET
STA. 33+00 TO STA. 38+00

proud past, promising future
CLARK COUNTY WASHINGTON

V: SHERYL 05/27/04 4:52pm --> V:\PROJECT\11900\11944\DWG\C9944S027.DWG

REF LIST
tscale: 20
resolved
944x001_border
944x500
944x510
KW WASH
944b104
944b106
944B200

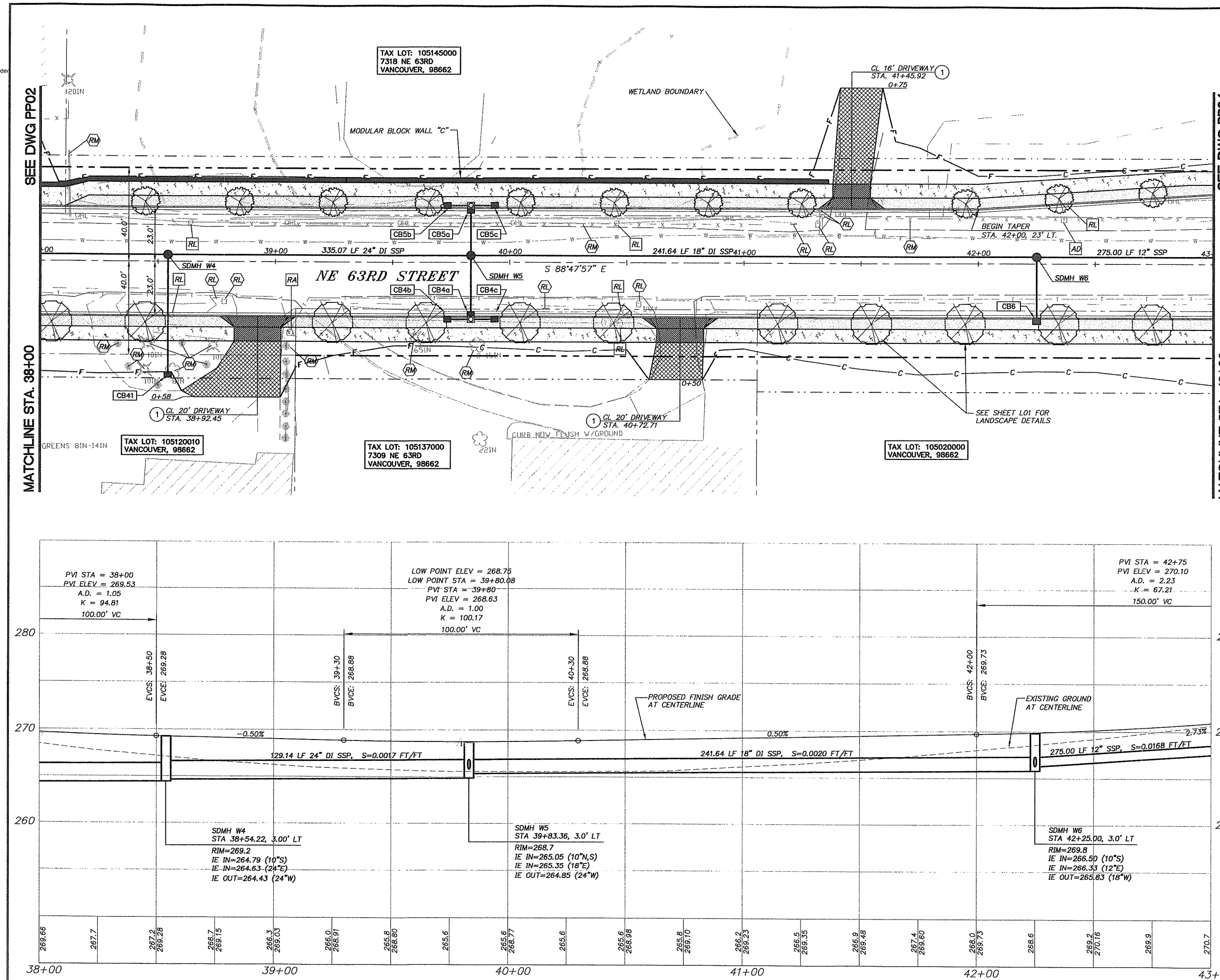

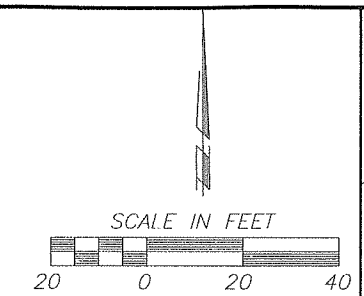

CONSTRUCTION NOTES

1. CONSTRUCT TYPE 1 CEMENT CONCRETE DRIVEWAY APPROACH PER CLARK COUNTY STD. PLAN NO. F14

CURB INLET INFORMATION

CB4a COMBINATION CURB INLET
ST. STA. 39+83.36, 23.00' RT
T.C. ELEV. = 268.68
I.E. (IN) = 265.18
I.E. (OUT) = 265.18
26 LF 10" DIP
S=0.0050 FT/FT

CB4b CURB INLET
ST. STA. 39+73.32, 23.00' RT
T.C. ELEV. = 268.69
I.E. (OUT) = 265.28
10 LF 10" STM. PIPE
S=0.0100 FT/FT

CB4c CURB INLET
ST. STA. 39+93.43, 23.00' RT
T.C. ELEV. = 268.69
I.E. (OUT) = 265.28
10 LF 10" STM. PIPE
S=0.0100 FT/FT

CB5a COMBINATION CURB INLET
ST. STA. 39+83.36, 23.00' LT
T.C. ELEV. = 268.68
I.E. (IN) = 265.18
I.E. (OUT) = 265.18
20 LF 10" DIP
S=0.0065 FT/FT

CB5b CURB INLET
ST. STA. 39+73.40, 23.00' LT
T.C. ELEV. = 268.69
I.E. (OUT) = 265.28
10 LF 10" DIP
S=0.0100 FT/FT

CB5c CURB INLET
ST. STA. 39+93.53, 23.00' LT
T.C. ELEV. = 268.69
I.E. (OUT) = 265.28
10 LF 10" STM. PIPE
S=0.0100 FT/FT

CB6 CURB INLET
ST. STA. 42+25, 23.00' RT
T.C. ELEV. = 269.83
I.E. (OUT) = 266.63
26 LF 10" DIP
S=0.0050 FT/FT

CB41 DITCH INLET
ST. STA. 38+54.22, 48.50' RT
RIM ELEV. = 266.30
I.E. (OUT) = 265.02
52 LF 10" STM. PIPE
S=0.0044 FT/FT

OBJECT TO BE:

REMOVED	= RM
RELOCATED	= RL
ABANDONED	= AB
REPLACED & RELOCATED	= RP
RELOCATED & ADJUSTED TO GRADE	= RA
ADJUSTED TO GRADE	= AD
TRIMMED	= T

BY: CONTRACTOR / CITY/COUNTY FORCES / OTHERS

NOT FOR CONSTRUCTION

DESIGNED:	SLW
DRAWN:	JRM
CRP:	330422
HORIZ.	1" = 20'
VERT.	1" = 5'
DATE:	5/28/2004
DWG:	PP03
SHEET	28 OF 63

CALL 48 HOURS BEFORE YOU DIG
1-800-424-5555
"It's the Law"
NORTHWEST UTILITIES NOTIFICATION CENTER

FRANCIS W. WESTERMANN
STATE OF WASHINGTON
22446
REGISTERED PROFESSIONAL ENGINEER
EXPIRES AUG. 31, 2005

oak Incorporated
700 Washington St., Suite 401
Vancouver, WA 98660
Phone: (360) 696-7313
FAX: (360) 737-9851

DESIGN & ENGINEERING DIVISION
NE 63RD STREET IMPROVEMENTS
PLAN AND PROFILE – NE 63RD STREET
STA. 38+00 TO STA. 43+00

proud past, promising future
CLARK COUNTY WASHINGTON

V: SHERYL 05/27/04 4:59pm --> V:\PROJECT\11900\11944\DWG\C9445028.DWG

V: SHERYL 05/28/04 8:58am --> V:\PROJECT\11900\11944\DWG\C944S029.DWG

REF LIST
scale: 20
resolved
344x001_border
344x500
344x510
XW WASH
34b104
34b106
34B200

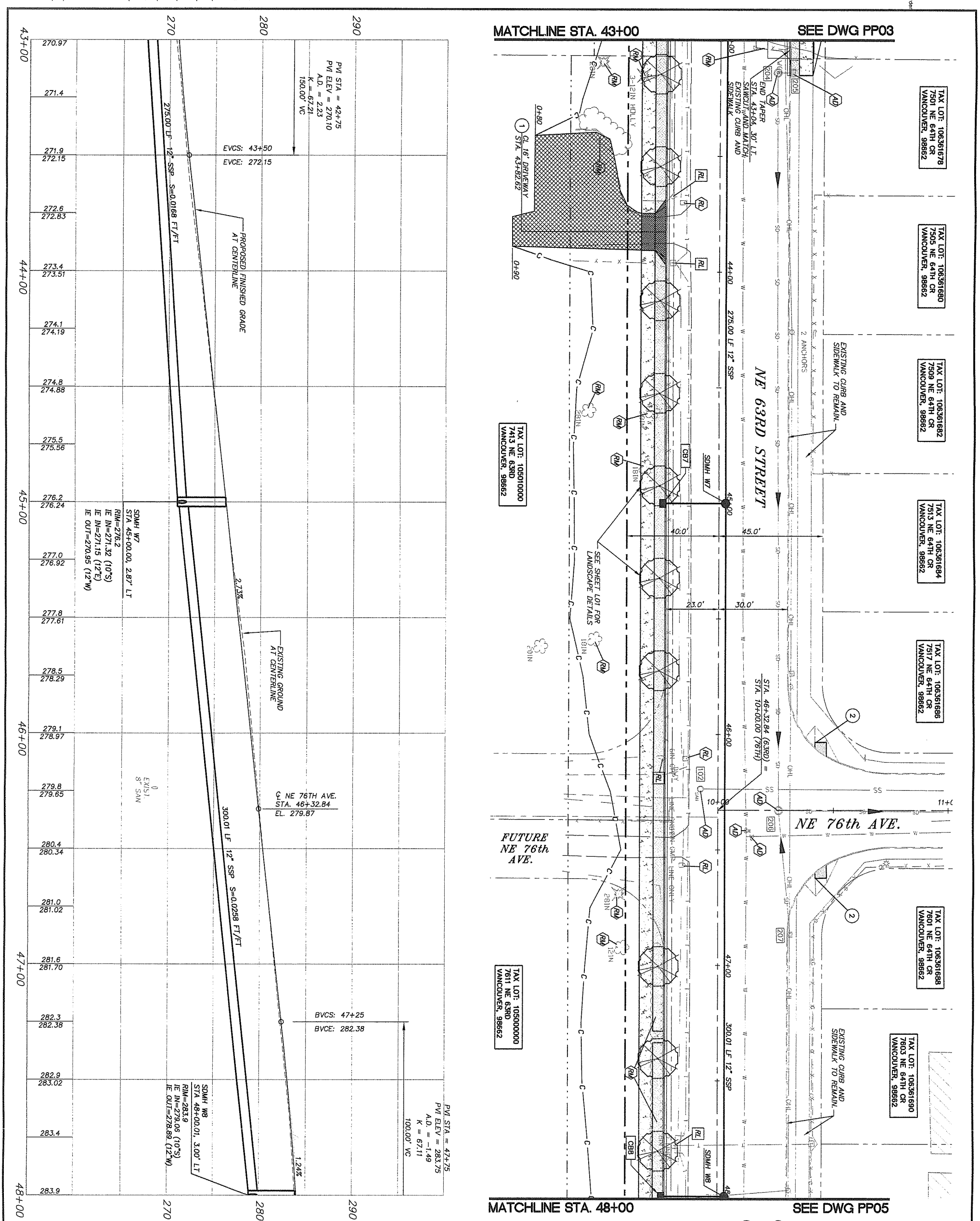

CURB INLET INFORMATION

CB7 — CURB INLET
ST. STA. 45+00.00, 23.00' RT
T.C. ELEV. = 276.17
I.E. (OUT) = 271.67
26 LF 10" STM. PIPE
S=0.0135 FT/FT

CB8 — CURB INLET
ST. STA. 48+00.01, 23.00' RT
T.C. ELEV. = 283.94
I.E. (OUT) = 279.44
26 LF 10" STM. PIPE
S=0.0146 FT/FT

CONSTRUCTION NOTES

1. CONSTRUCT TYPE 1 CEMENT CONCRETE DRIVEWAY APPROACH PER CLARK COUNTY STD. PLAN NO. F14
2. INSTALL DETECTABLE WARNING PATTERN IN EXISTING RAMPS PER DETAILS ON SHEET D01

SCALE IN FEET: 20 0 20 40

OBJECT TO BE:	
REMOVED	= RM
RELOCATED	= RL
ABANDONED	= AB
REPLACED & RELOCATED	= RP
RELOCATED & ADJUSTED TO GRADE	= RA
ADJUSTED TO GRADE	= AD
TRIMMED	= T

BY: CONTRACTOR, CITY/COUNTY FORCES, OTHERS

NOT FOR CONSTRUCTION

proud past, promising future
CLARK COUNTY WASHINGTON

DESIGN & ENGINEERING DIVISION
NE 63RD STREET IMPROVEMENTS

PLAN AND PROFILE – NE 63RD STREET
STA. 43+00 TO STA. 48+00

Otak Incorporated
700 Washington St., Suite 401
Vancouver, WA 98660
Phone: (360) 737-9613
FAX: (360) 737-9651

PAMELA KIEL WIEDEMANN, STATE OF WASHINGTON, 22440, REGISTERED PROFESSIONAL ENGINEER
EXPIRES: AUG. 31, 2005

CALL 48 HOURS BEFORE YOU DIG
1-800-424-5555
"It's the Law"
NORTHWEST UTILITIES NOTIFICATION CENTER

DESIGNED:	SLW
DRAWN:	JRM
CRP:	330422
HORIZ.	1" = 20'
VERT.	1" = 5'
DATE:	5/28/2004
DWG:	PP04
SHEET	29 OF 63

V: GRANTE 01/26/04 4:59pm --> R:\DWG\C944S023.DWG

REF LIST
scale: 20
resolved
944x001_border
944x500
944x510
KW WASH
344b104
344b106
344B200

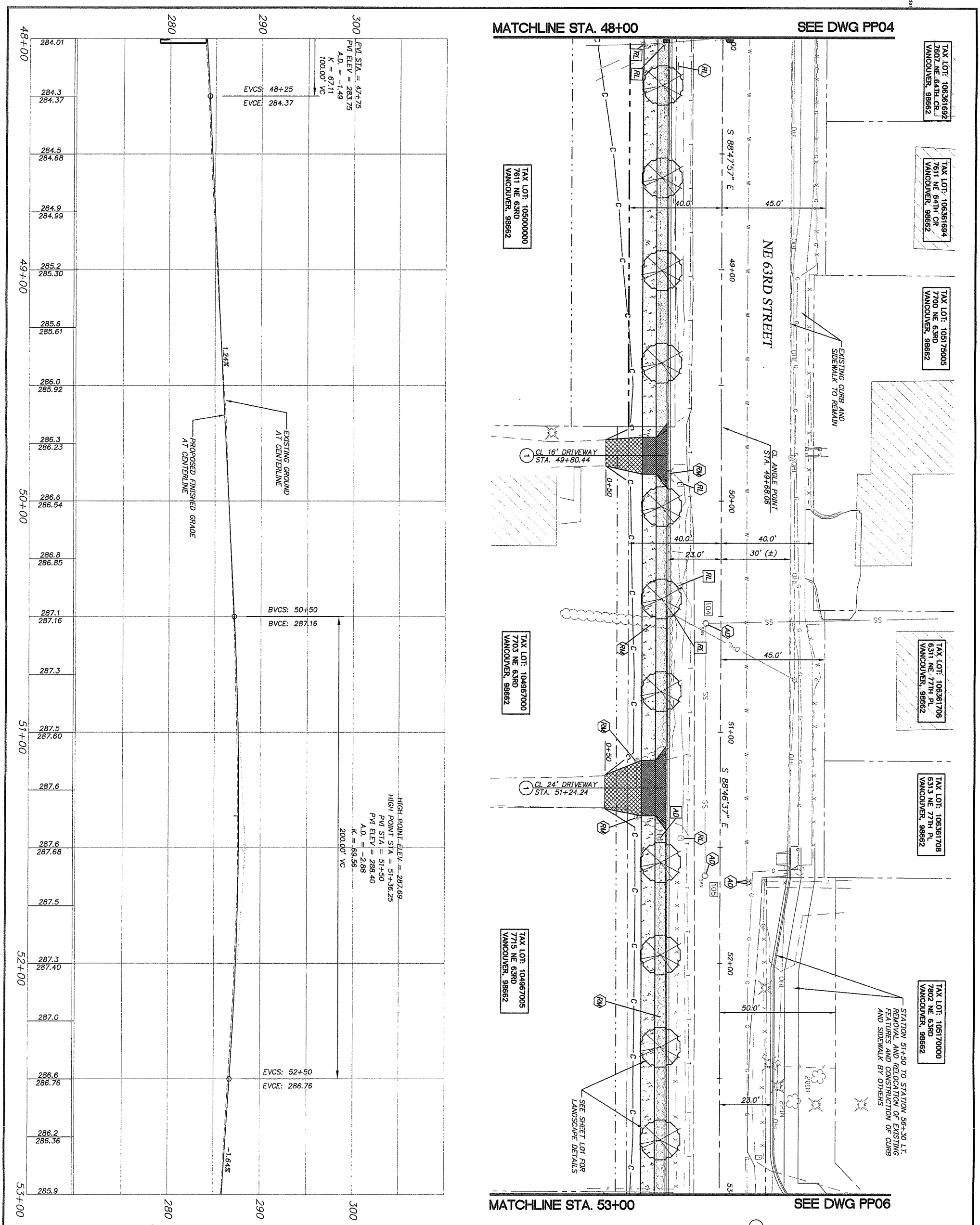

NOT FOR CONSTRUCTION

proud past, promising future
CLARK COUNTY
WASHINGTON

DESIGN & ENGINEERING DIVISION
NE 63RD STREET IMPROVEMENTS

PLAN AND PROFILE – NE 63RD STREET
STA. 48+00 TO STA. 53+00

otak Incorporated
700 Washington St., Suite 401
Vancouver, WA 98660
Phone: (360) 737-9613
FAX: (360) 737-9651

PAMELA KIEL WIEDEMANN
STATE OF WASHINGTON
22440
REGISTERED PROFESSIONAL ENGINEER
EXPIRES: AUG. 31, 2005

CALL 48 HOURS BEFORE YOU DIG
1-800-424-5555
"It's the Law"
NORTHWEST UTILITIES NOTIFICATION CENTER

DESIGNED:	SLW
DRAWN:	JRM
CRP:	330422
HORIZ.	1" = 20'
VERT.	1" = 5'
DATE:	5/28/2004
DWG:	PP05
SHEET	30 OF 63

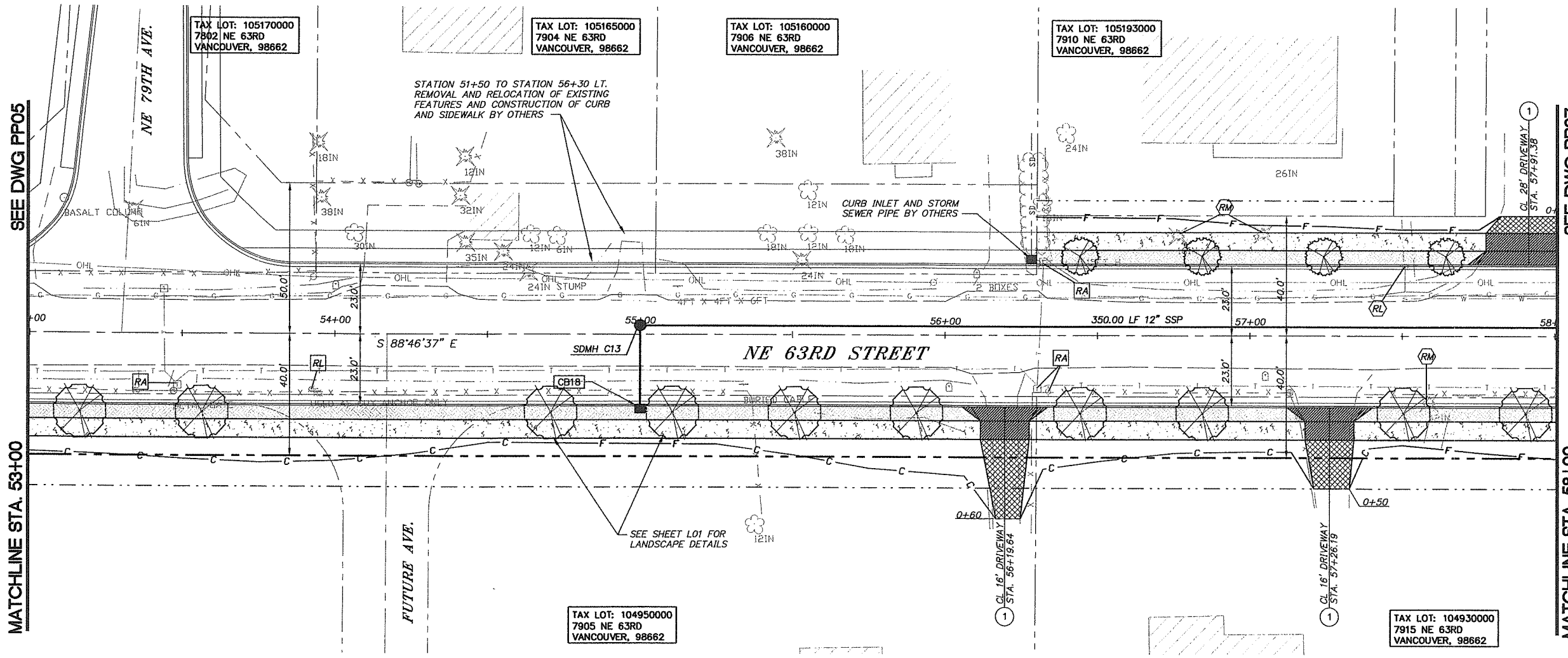

SCALE IN FEET

20 0 20 40

CONSTRUCTION NOTES

1. CONSTRUCT TYPE 1 CEMENT CONCRETE DRIVEWAY APPROACH PER CLARK COUNTY STD. PLAN NO. F14

CURB INLET INFORMATION

CB18 CURB INLET
ST. STA. 55+00.00, 23.00' RT
T.C. ELEV. = 282.61
I.E. (OUT) = 278.88
26 LF 10" STM. PIPE
S=0.0100 FT/FT

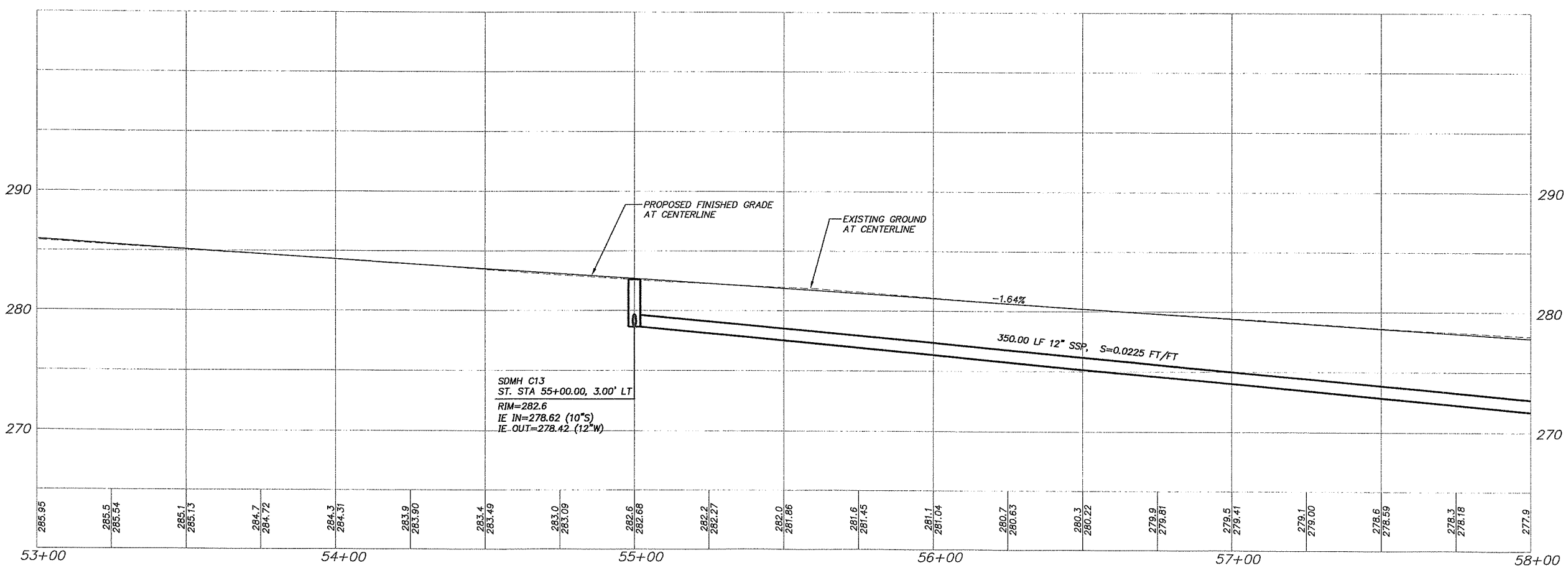

OBJECT TO BE:

REMOVED	= RM
RELOCATED	= RL
ABANDONED	= AB
REPLACED & RELOCATED	= RP
RELOCATED & ADJUSTED TO GRADE	= RA
ADJUSTED TO GRADE	= AD
TRIMMED	= T

BY: ⬡ CONTRACTOR ⬭ CITY/COUNTY FORCES ☐ OTHERS

NOT FOR CONSTRUCTION

DESIGNED:	SLW
DRAWN:	JRM
CRP:	330422
HORIZ.	1" = 20'
VERT.	1" = 5'
DATE:	5/28/2004
DWG:	PP06
SHEET	31 OF 63

CALL 48 HOURS BEFORE YOU DIG 1-800-424-5555 "It's the Law" NORTHWEST UTILITIES NOTIFICATION CENTER

PAMELA R. WIEDEMANN, STATE OF WASHINGTON, 23440, REGISTERED PROFESSIONAL ENGINEER, EXPIRES AUG. 31, 2005

otak Incorporated
700 Washington St., Suite 401
Vancouver, WA 98660
Phone: (360) 737-9613
FAX: (360) 737-9651

DESIGN & ENGINEERING DIVISION
NE 63RD STREET IMPROVEMENTS
PLAN AND PROFILE – NE 63RD STREET
STA. 53+00 TO STA. 58+00

proud past, promising future

CLARK COUNTY WASHINGTON

REF LIST
scale: 20
esolved
944x001_border
944x500
944x510
CW WASH
944b104
944b106
944B200

V: SHERYL 05/27/04 5:05pm --> V:\PROJECT\11900\11944\DWG\G944S031.DWG

REF LIST
scale: 20
resolved
944x001_border
944x500
944x510
CW WASH
944b104
944b106
944B200

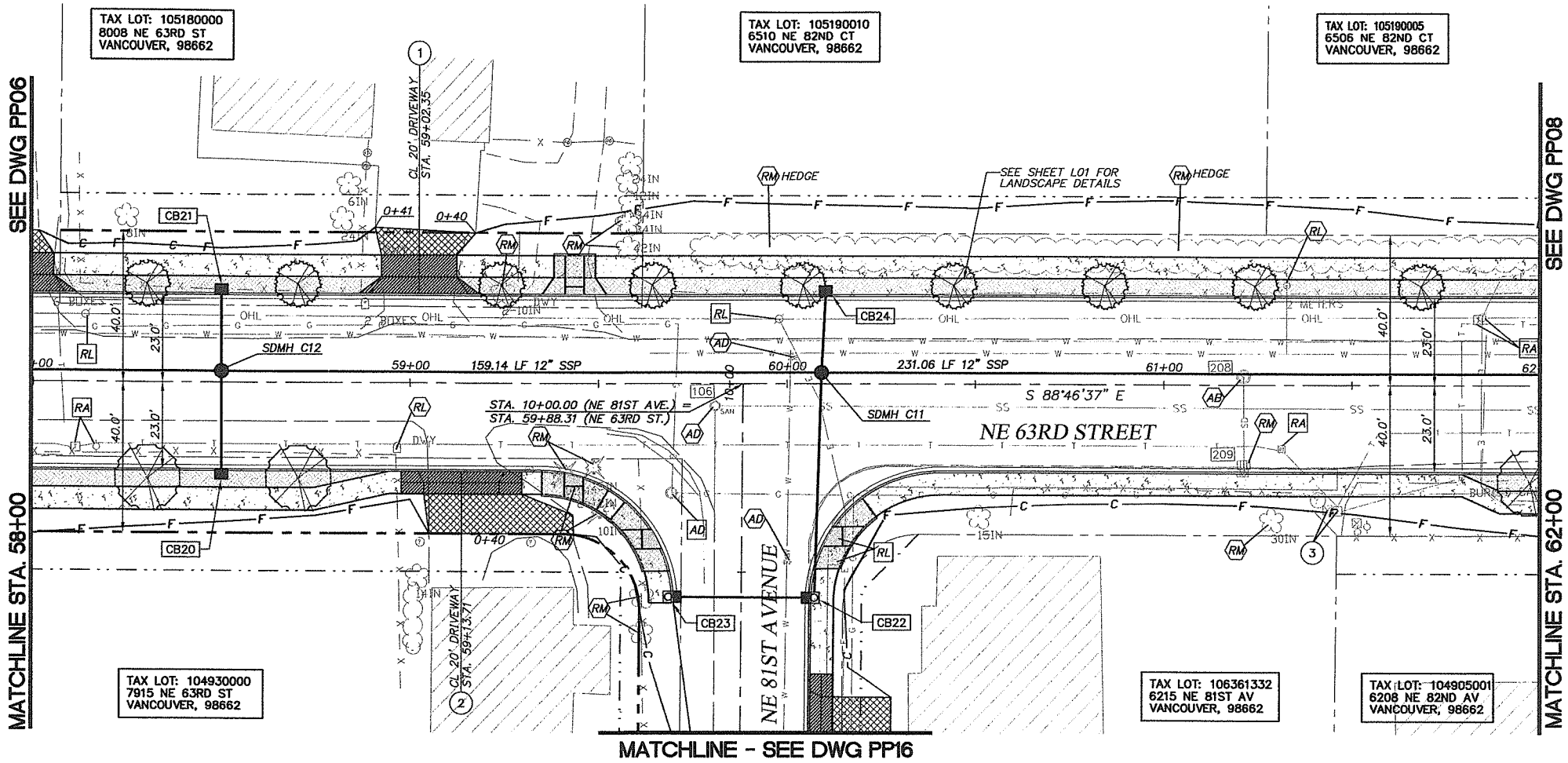

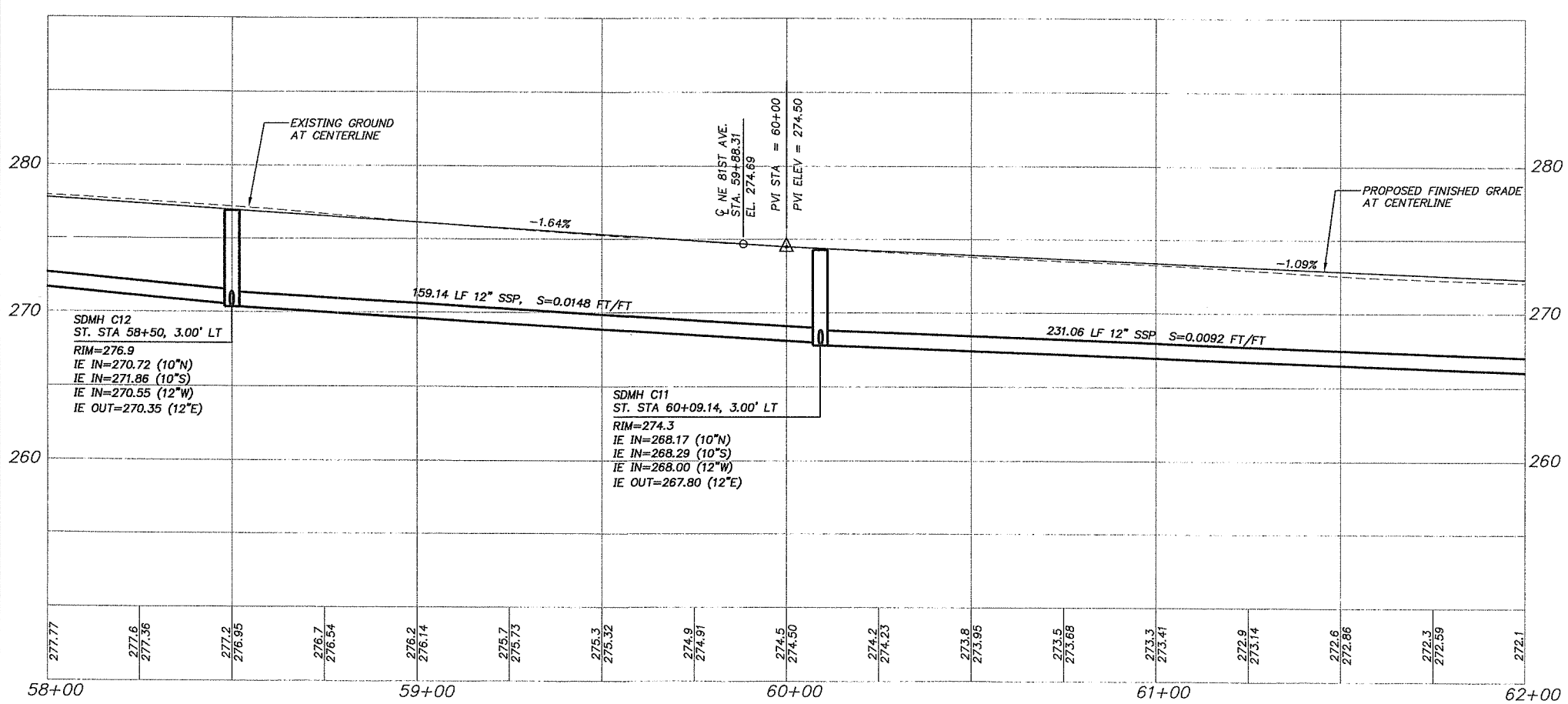

SCALE IN FEET

20 0 20 40

CONSTRUCTION NOTES

1. CONSTRUCT TYPE 1 CEMENT CONCRETE DRIVEWAY APPROACH PER CLARK COUNTY STD. PLAN NO. F14
2. CONSTRUCT TYPE 2 CEMENT CONCRETE DRIVEWAY APPROACH PER CLARK COUNTY STD. PLAN NO. F15
3. PROTECT EXISTING UTILITY VAULTS.

CURB INLET INFORMATION

CB20 CURB INLET
ST. STA. 58+50.00, 23.00' RT
T.C. ELEV. = 276.88
I.E. (OUT) = 272.38
26 LF 10" STM. PIPE
S=0.0200 FT/FT

CB21 CURB INLET
ST. STA. 58+50.00, 23.00' LT
T.C. ELEV. = 276.88
I.E. (OUT) = 271.38
20 LF 10" STM. PIPE
S=0.0330 FT/FT

CB22 COMBINATION CURB INLET
ST. STA. 9+43.31, 18.00' RT
T.C. ELEV. = 274.33
I.E. (IN) = 269.33
I.E. (OUT) = 269.33
60 LF 10" STM. PIPE
S=0.0173 FT/FT

CB23 COMBINATION CURB INLET
ST. STA. 9+43.31, 18.00' LT
T.C. ELEV. = 274.35
I.E. (OUT) = 270.05
39 LF 10" STM. PIPE
S=0.0185 FT/FT

CB24 CURB INLET
ST. STA. 60+10.19, 23.00' LT
T.C. ELEV. = 274.32
I.E. (OUT) = 268.82
20 LF 10" STM. PIPE
S=0.0325 FT/FT

OBJECT TO BE:

REMOVED	= RM
RELOCATED	= RL
ABANDONED	= AB
REPLACED & RELOCATED	= RP
RELOCATED & ADJUSTED TO GRADE	= RA
ADJUSTED TO GRADE	= AD
TRIMMED	= T

BY: ⬡ CONTRACTOR ◯ CITY/COUNTY FORCES ☐ OTHERS

NOT FOR CONSTRUCTION

DESIGNED:	SLW
DRAWN:	JRM
CRP:	330422
HORIZ.	1" = 20'
VERT.	1" = 5'
DATE:	5/28/2004
DWG:	PP07
SHEET	32 OF 63

CALL 48 HOURS BEFORE YOU DIG 1-800-424-5555 "It's the Law" NORTHWEST UTILITIES NOTIFICATION CENTER

PAMELA R. WEDEMANN STATE OF WASHINGTON 22440 REGISTERED PROFESSIONAL ENGINEER
EXPIRES: AUG. 31, 2005

otak Incorporated
700 Washington St. Suite 401
Vancouver, WA 98660
Phone: (360) 737-9613
FAX: (360) 737-9651

DESIGN & ENGINEERING DIVISION
NE 63RD STREET IMPROVEMENTS

PLAN AND PROFILE – NE 63RD STREET
STA. 58+00 TO STA. 62+00

proud past, promising future
CLARK COUNTY WASHINGTON

V: SHERYL 05/28/04 9:02am --> V:\PROJECT\11900\11944\DWG\C9445032.DWG

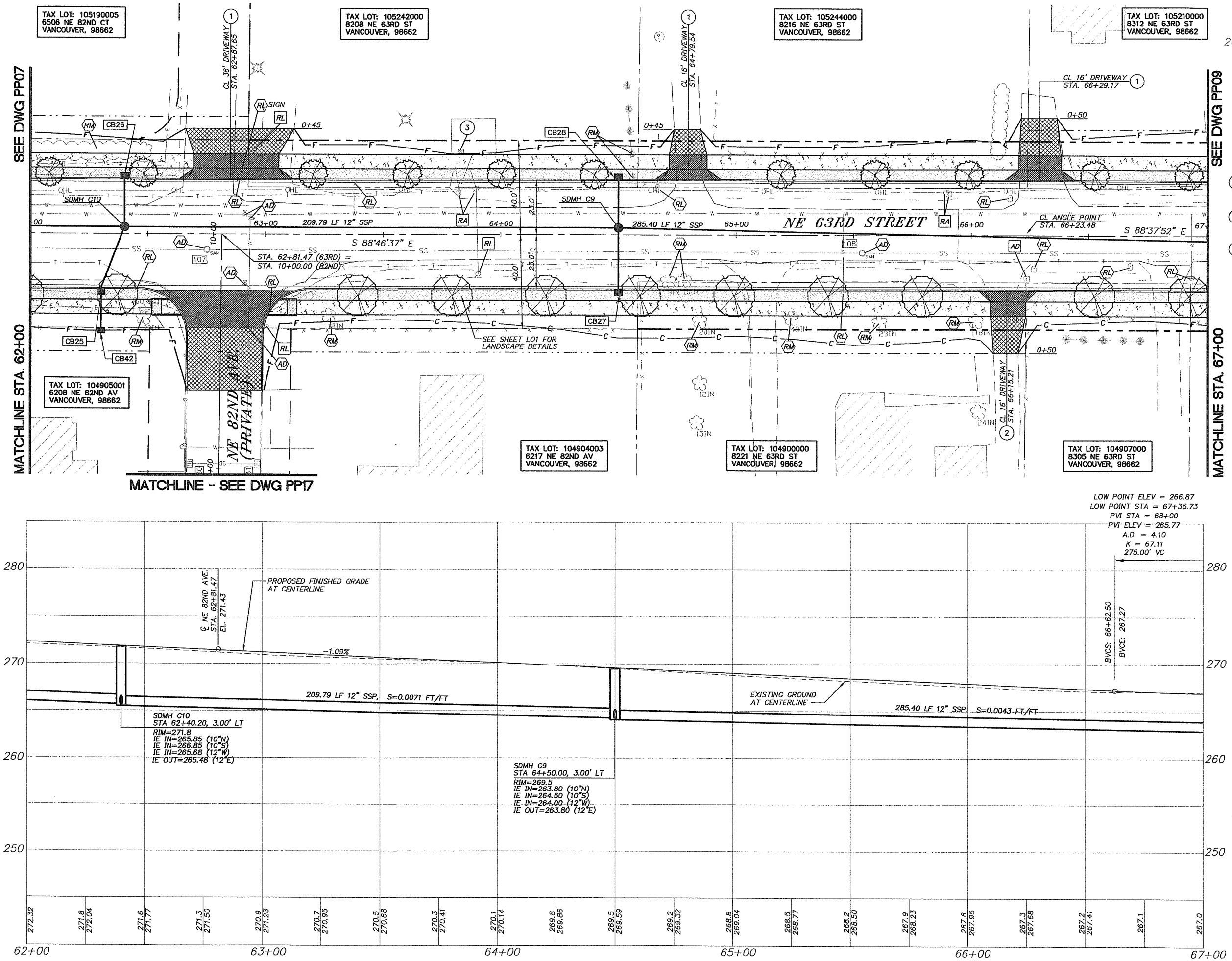

CONSTRUCTION NOTES

1. CONSTRUCT TYPE 1 CEMENT CONCRETE DRIVEWAY APPROACH PER CLARK COUNTY STD. PLAN NO. F14
2. CONSTRUCT TYPE 2 CEMENT CONCRETE DRIVEWAY APPROACH PER CLARK COUNTY STD. PLAN NO. F15
3. PROTECT EXISTING UTILITY VAULTS.

CURB INLET INFORMATION

CB25 CURB INLET
ST. STA. 62+30.18, 23.00' RT.
T.C. ELEV. = 271.92
I.E. (IN) = 267.42
I.E. (OUT) = 267.42
28 LF 10" STM. PIPE
S=0.0204 FT/FT

CB26 CURB INLET
ST. STA. 62+40.19, 23.00' LT.
T.C. ELEV. = 271.81
I.E. (OUT) = 266.31
20 LF 10" STM. PIPE
S=0.0230 FT/FT

CB27 CURB INLET
ST. STA. 64+50.00, 23.00' RT.
T.C. ELEV. = 269.52
I.E. (OUT) = 265.02
26 LF 10" STM. PIPE
S=0.0200 FT/FT

CB28 CURB INLET
ST. STA. 64+50.00, 23.00' LT.
T.C. ELEV. = 269.52
I.E. (OUT) = 263.90
20 LF 10" STM. PIPE
S=0.0050 FT/FT

CB42 DITCH INLET
ST. STA. 62+30.18, 41.12' RT.
RIM ELEV. = 270.50
I.E. (OUT) = 267.75
16 LF 10" STM. PIPE
S=0.0206 FT/FT

OBJECT TO BE:

REMOVED	= RM
RELOCATED	= RL
ABANDONED	= AB
REPLACED & RELOCATED	= RP
RELOCATED & ADJUSTED TO GRADE	= RA
ADJUSTED TO GRADE	= AD
TRIMMED	= T

BY: ⬡ CONTRACTOR ◯ CITY/COUNTY FORCES ☐ OTHERS

NOT FOR CONSTRUCTION

DESIGNED:	SLW
DRAWN:	JRM
CRP:	330422
HORIZ.	1" = 20'
VERT.	1" = 5'
DATE:	5/28/2004
DWG:	PP08
SHEET	33 OF 63

CALL 48 HOURS BEFORE YOU DIG 1-800-424-5555 "It's the Law" NORTHWEST UTILITIES NOTIFICATION CENTER

PAUL R. WEDEMANN STATE OF WASHINGTON 22440 REGISTERED PROFESSIONAL ENGINEER EXPIRES AUG. 31, 2005

otak Incorporated
720 Washington St. Suite 401
Vancouver, WA. 98660
Phone: (360) 737-9613
FAX: (360) 737-9651

DESIGN & ENGINEERING DIVISION
NE 63RD STREET IMPROVEMENTS
PLAN AND PROFILE - NE 63RD STREET
STA. 62+00 TO STA. 67+00

proud past, promising future
CLARK COUNTY WASHINGTON

V: JOHNKA 11/11/03 2:21pm --> R:\DWG\C9445026.DWG

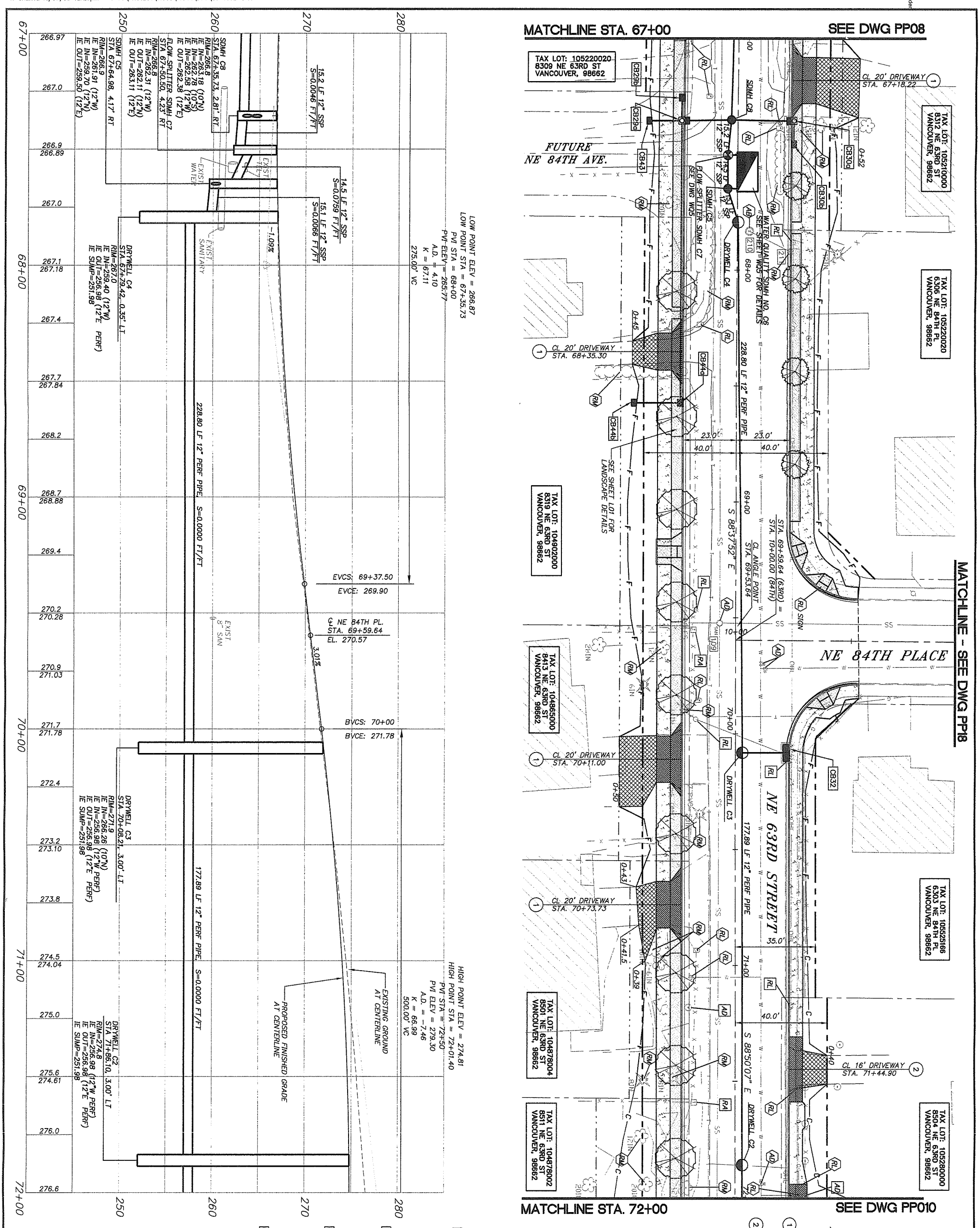

NOT FOR CONSTRUCTION

CLARK COUNTY WASHINGTON
proud past, promising future

DESIGN & ENGINEERING DIVISION
NE 63RD STREET IMPROVEMENTS

PLAN AND PROFILE – NE 63RD STREET
STA. 67+00 TO STA. 72+00

otak Incorporated
700 Washington St., Suite 401
Vancouver, WA 98660
Phone: (360) 737-9613
FAX: (360) 737-9651

PAMELA KIEL WIEDEMANN, STATE OF WASHINGTON, 22440, REGISTERED PROFESSIONAL ENGINEER
EXPIRES: AUG. 31, 2005

CALL 48 HOURS BEFORE YOU DIG
1-800-424-5555
"It's the Law"
NORTHWEST UTILITIES NOTIFICATION CENTER

DESIGNED:	SLW
DRAWN:	JRM
CRP:	330422
HORIZ.	1" = 20'
VERT.	1" = 5'
DATE:	5/28/2004
DWG:	PP09
SHEET	34 OF 63

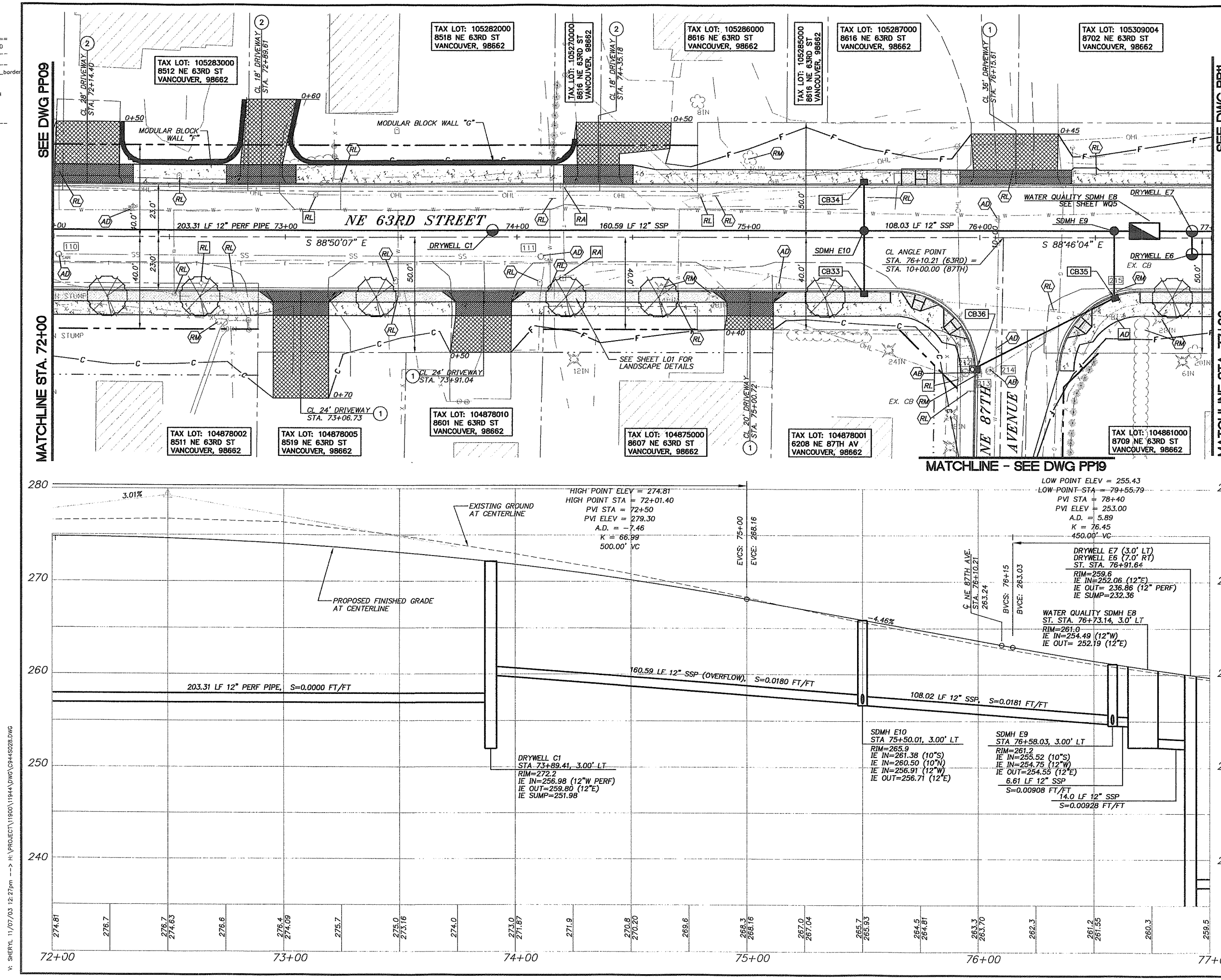

CONSTRUCTION NOTES

1. CONSTRUCT TYPE 1 CEMENT CONCRETE DRIVEWAY APPROACH PER CLARK COUNTY STD. PLAN NO. F14
2. CONSTRUCT TYPE 2 CEMENT CONCRETE DRIVEWAY APPROACH PER CLARK COUNTY STD. PLAN NO. F15

CURB INLET INFORMATION

CB33 CURB INLET
ST. STA.75+50.00, 23.00' RT.
T.C. ELEV. = 265.86
I.E. (OUT) = 261.86
26 LF 10" STM. PIPE
S=0.0185 FT/FT

CB34 CURB INLET
ST. STA. 75+50.00, 23.00' LT.
T.C. ELEV. = 265.86
I.E. (OUT) = 260.86
20 LF 10" STM. PIPE
S=0.0180 FT/FT

CB35 CURB INLET
ST. STA. 76.58.04, 24.84' RT.
T.C. ELEV. = 261.29
I.E. (IN) = 256.04
I.E. (OUT) = 256.04
28 LF 10" STM. PIPE
S=0.0186 FT/FT

CB36 COMBINATION CURB INLET
ST. STA. 9+42.79, 11.16' LT.
T.C. ELEV. = 262.55
I.E. (OUT) = 258.55
67 LF 10" STM. PIPE
S=0.0048 FT/FT

OBJECT TO BE:

REMOVED	= RM
RELOCATED	= RL
ABANDONED	= AB
REPLACED & RELOCATED	= RP
RELOCATED & ADJUSTED TO GRADE	= RA
ADJUSTED TO GRADE	= AD
TRIMMED	= T

BY: ⬡ CONTRACTOR ◯ CITY/COUNTY FORCES ☐ OTHERS

NOT FOR CONSTRUCTION

DESIGNED:	SLW
DRAWN:	GME
CRP:	330422
HORIZ.	1" = 20'
VERT.	1" = 5'
DATE:	5/28/2004
DWG:	PP10
SHEET	35 OF 63

CALL 48 HOURS BEFORE YOU DIG 1-800-424-5555 "It's the Law" NORTHWEST UTILITIES NOTIFICATION CENTER

PAMELA J. WILLEMANN STATE OF WASHINGTON 22440 PROFESSIONAL ENGINEER EXPIRES AUG. 31, 2005

otak Incorporated
700 Washington St. Suite 401
Vancouver, WA 98660
Phone: (360) 737-8053
FAX: (360) 737-9851

DESIGN & ENGINEERING DIVISION
NE 63RD STREET IMPROVEMENTS
PLAN AND PROFILE - NE 63RD STREET
STA. 72+00 TO STA. 77+00

proud past, promising future
CLARK COUNTY WASHINGTON

REF LIST
tscale: 20
resolved
944x001_border
944x500
944x510
KW WASH
944b104
944b106
944B200

V: SHEPTL 11/07/03 12:27pm --> H:\PROJECT\11900\11944\DWG\C9445028.DWG

REF LIST
tscale: 20
resolved
944x001_border
944x500
944x510
KW WASH
944b104
944b106
944B200

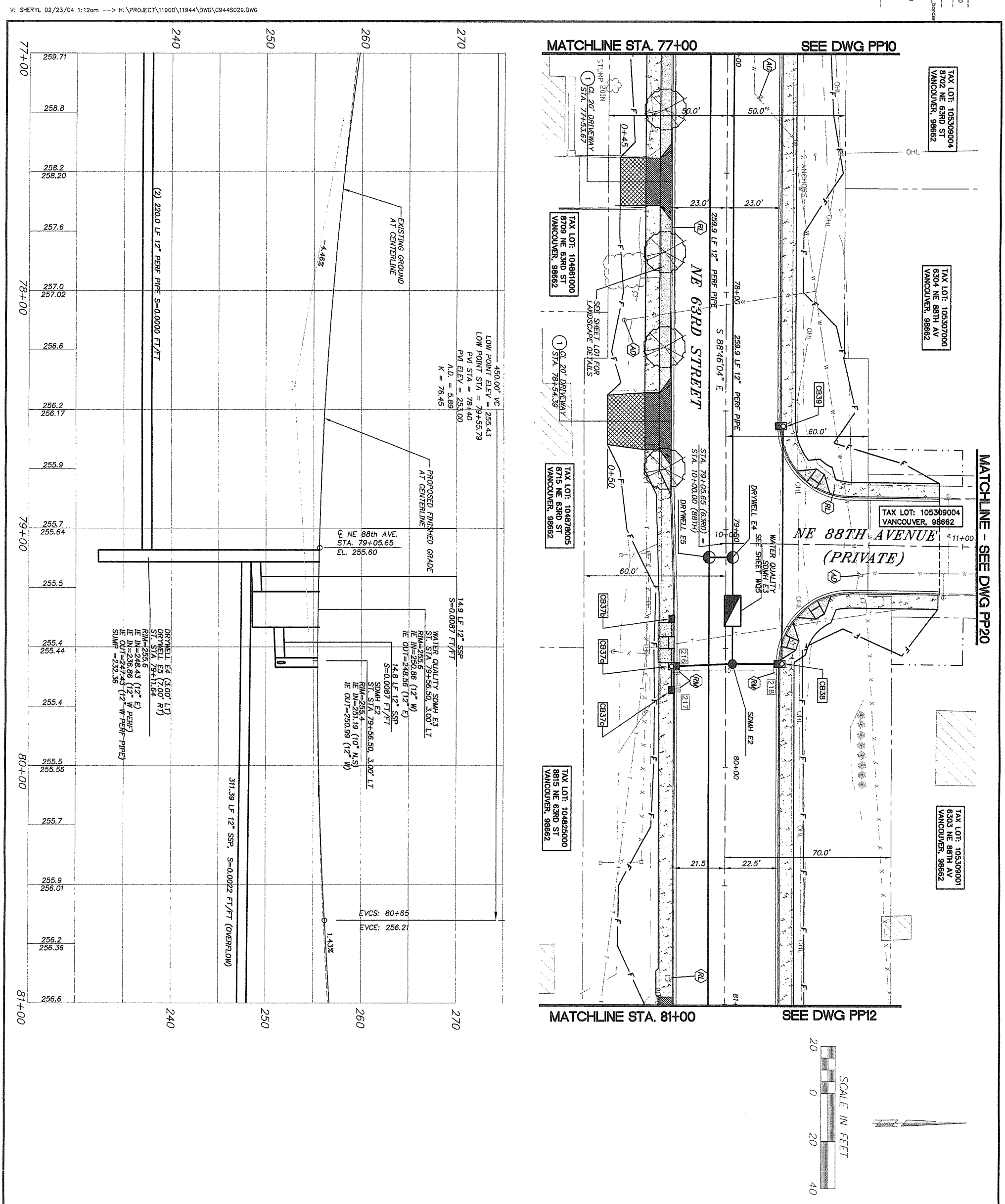

CONSTRUCTION NOTES

1. CONSTRUCT TYPE 1 CEMENT CONCRETE DRIVEWAY APPROACH PER CLARK COUNTY STD. PLAN NO. F14

CURB INLET INFORMATION

CB37a COMBINATION CURB INLET
ST. STA. 79+57.54, 21.50' RT.
T.C. ELEV. = 255.38
I.E. (IN) = 251.38
I.E. (OUT) = 251.38
25 LF 10" STM. PIPE
S=0.0076 FT/FT

CB37b CURB INLET
ST. STA. 79+37.54, 21.50' RT
T.C. ELEV. = 255.40
I.E. (OUT) = 251.58
20 LF 10" STM. PIPE
S=0.0100 FT/FT

CB37c CURB INLET
ST. STA. 79+67.50, 21.50' RT.
T.C. ELEV. = 255.38
I.E. (OUT) = 251.58
10 LF 10" STM. PIPE
S=0.0200 FT/FT

CB38 COMBINATION CURB INLET
ST. STA. 79+56.49, 22.50' LT.
T.C. ELEV. = 255.36
I.E. (IN) = 251.36
I.E. (OUT) = 251.36
21 LF 10" STM. PIPE
S=0.0081 FT/FT

CB39 COMBINATION CURB INLET
ST. STA. 78+56.38, 23.00' LT.
T.C. ELEV. = 256.03
I.E. (OUT) = 252.03
100 LF 10" STM. PIPE
S=0.0067 FT/FT

OBJECT TO BE:

REMOVED	= RM
RELOCATED	= RL
ABANDONED	= AB
REPLACED & RELOCATED	= RP
RELOCATED & ADJUSTED TO GRADE	= RA
ADJUSTED TO GRADE	= AD
TRIMMED	= T

BY: ⬡ CONTRACTOR ○ CITY/COUNTY FORCES □ OTHERS

NOT FOR CONSTRUCTION

CLARK COUNTY WASHINGTON
proud past, promising future

DESIGN & ENGINEERING DIVISION
NE 63RD STREET IMPROVEMENTS

PLAN AND PROFILE – NE 63RD STREET
STA. 77+00 TO STA. 81+00

otak Incorporated
700 Washington St., Suite 401
Vancouver, WA 98660
Phone: (360) 737-9613
FAX: (360) 737-9651

PAMELA KIEL WIEDEMANN
STATE OF WASHINGTON
22440
REGISTERED PROFESSIONAL ENGINEER
EXPIRES: AUG. 31, 2005

CALL 48 HOURS BEFORE YOU DIG
1-800-424-5555
"It's the Law"
NORTHWEST UTILITIES NOTIFICATION CENTER

DESIGNED:	SLW
DRAWN:	JRM
CRP:	330422
HORIZ.	1" = 20'
VERT.	1" = 5'
DATE:	5/28/2004
DWG:	PP11
SHEET	36 OF 63

V: SHERYL 02/23/04 1:09am --> H:\PROJECT\11900\11944\DWG\C944S030.DWG

REF LIST
tscale: 20
esolved
944x001_border
944x500
944x510
arcelNames
KW WASH
944b104
944b106
944b200

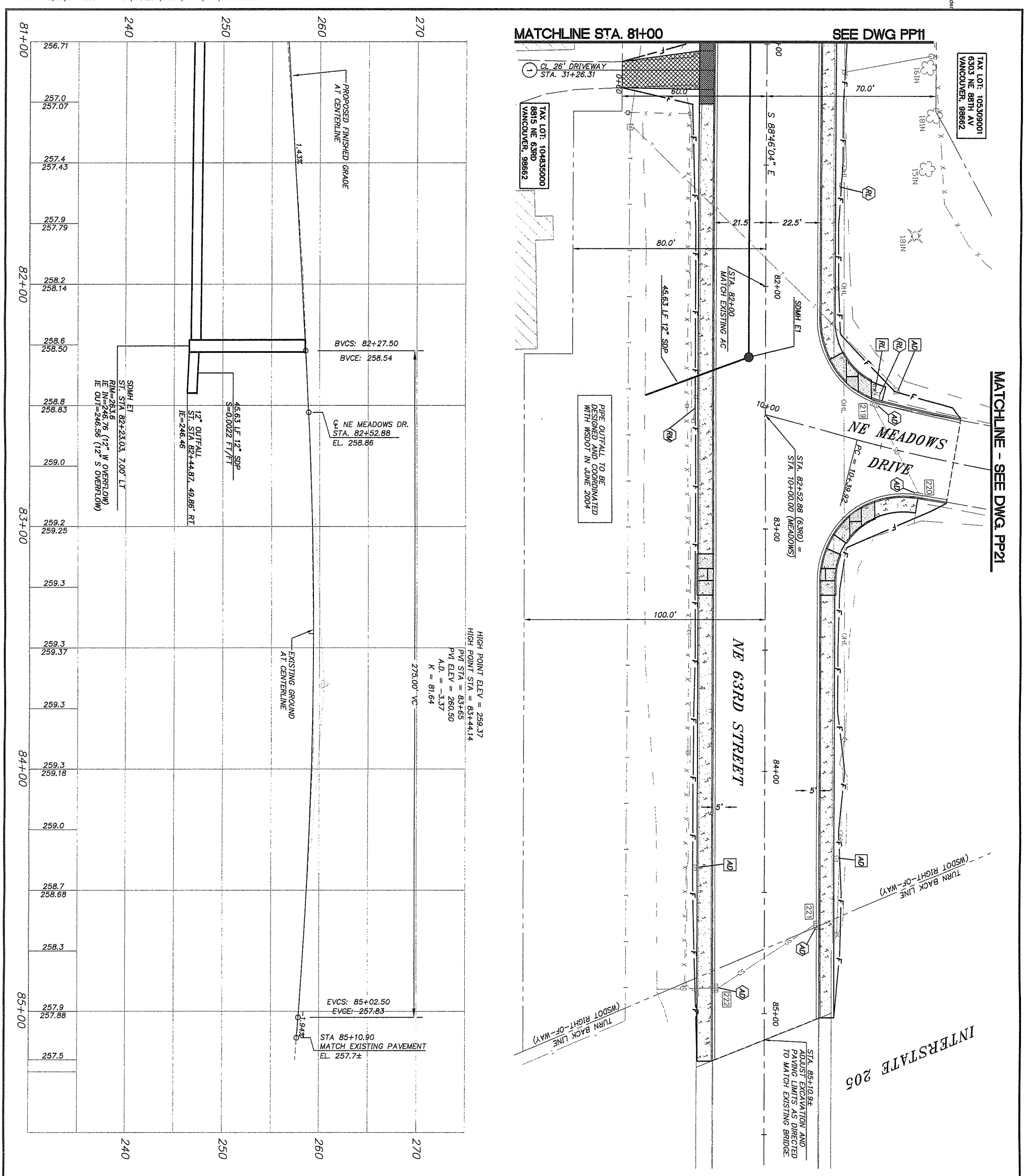

CONSTRUCTION NOTES

1. CONSTRUCT TYPE 3 CEMENT CONCRETE DRIVEWAY APPROACH PER CLARK COUNTY STD. PLAN NO. F14

SCALE IN FEET
20 0 20 40

OBJECT TO BE:

REMOVED	= RM
RELOCATED	= RL
ABANDONED	= AB
REPLACED & RELOCATED	= RP
RELOCATED & ADJUSTED TO GRADE	= RA
ADJUSTED TO GRADE	= AD
TRIMMED	= T

BY: ⬡ CONTRACTOR ○ CITY/COUNTY FORCES □ OTHERS

NOT FOR CONSTRUCTION

proud past, promising future
CLARK COUNTY
WASHINGTON

DESIGN & ENGINEERING DIVISION
NE 63RD STREET IMPROVEMENTS

PLAN AND PROFILE – NE 63RD STREET
STA. 81+00 TO STA. 85+25

otak Incorporated
700 Washington St., Suite 401
Vancouver, WA 98660
Phone: (360) 737-9613
FAX: (360) 737-9651

PAMELA KIEL WIEDEMANN
STATE OF WASHINGTON
22440
REGISTERED PROFESSIONAL ENGINEER
EXPIRES: AUG. 31, 2005

CALL 48 HOURS BEFORE YOU DIG
1-800-424-5555
"It's the Law"
NORTHWEST UTILITIES NOTIFICATION CENTER

DESIGNED:	SLW
DRAWN:	JRM
CRP:	330422
HORIZ.	1" = 20'
VERT.	1" = 5'
DATE:	5/28/2004
DWG:	PP12
SHEET	37 OF 63

REF LIST
tscale: 20
esolved
944x001_border
944x500
944x510
KW WASH
944b104
944b106
944B200

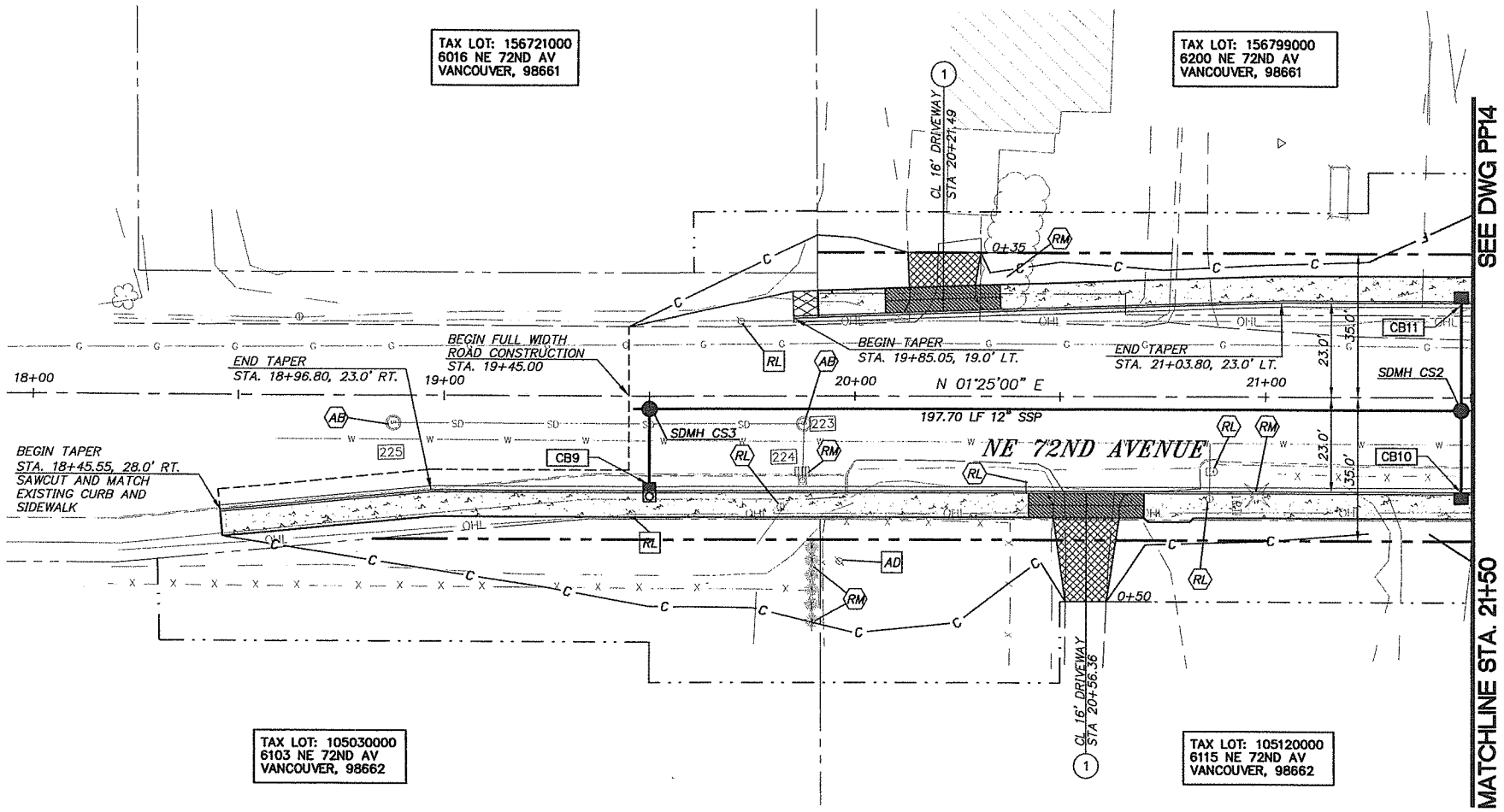

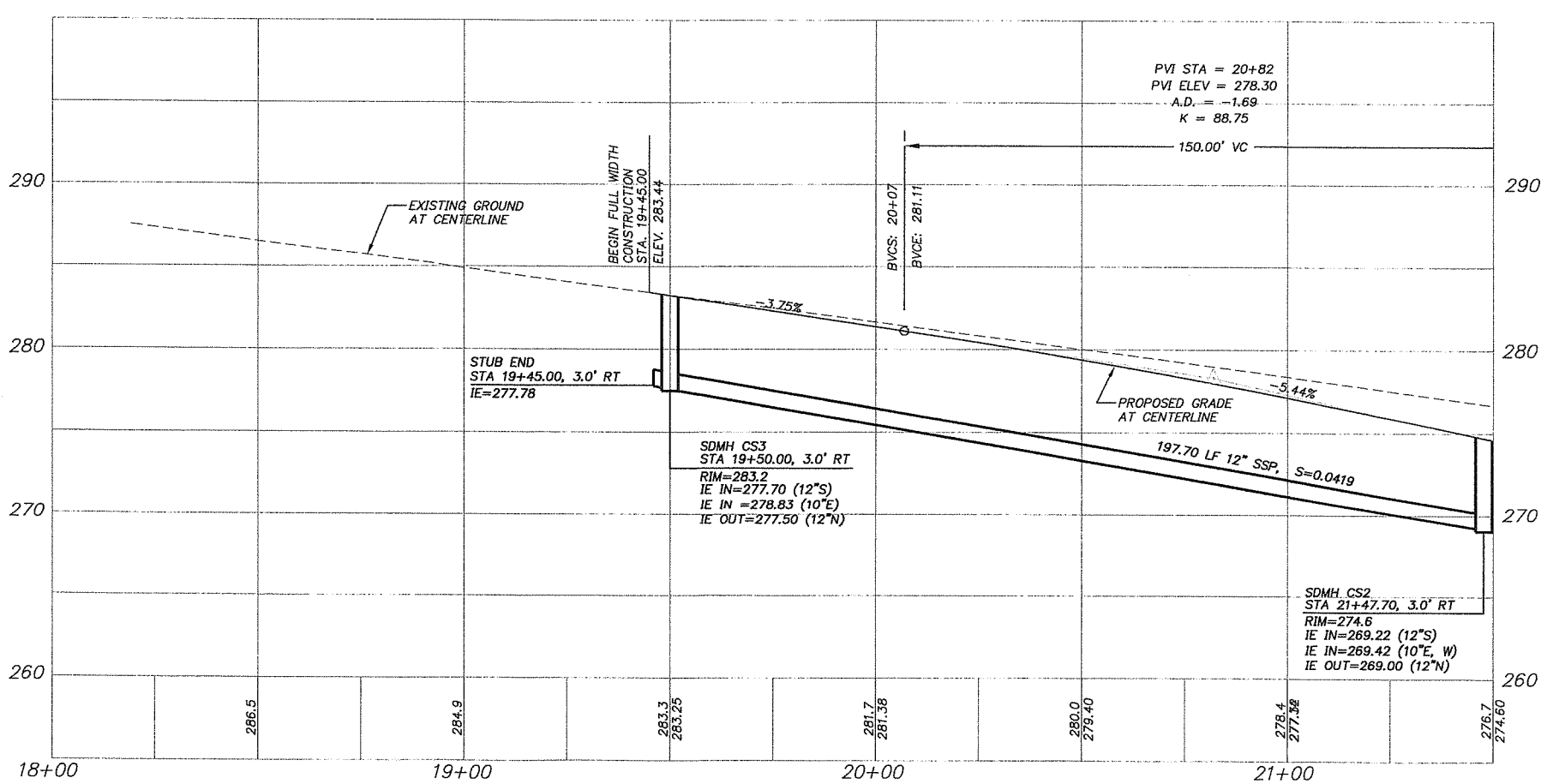

SCALE IN FEET
20 0 20 40

CONSTRUCTION NOTES

1. CONSTRUCT TYPE 2 CEMENT CONCRETE DRIVEWAY APPROACH PER CLARK COUNTY STD. PLAN NO. F15

CURB INLET INFORMATION

CB9 COMBINATION CURB INLET
ST. STA. 19+50.00, 23.00' RT
T.C. ELEV. = 283.23
I.E. (OUT) = 279.23
20 LF 10" STM. PIPE
S=0.0200 FT/FT

CB10 CURB INLET
ST. STA. 21+47.70, 23.00' RT
T.C. ELEV. = 274.65
I.E. (OUT) = 270.65
20 LF 10" STM. PIPE
S=0.0615 FT/FT

CB11 CURB INLET
ST. STA. 21+47.70, 23.00' LT
T.C. ELEV. = 274.65
I.E. (OUT) = 270.65
26 LF 10" STM. PIPE
S=0.0473 FT/FT

OBJECT TO BE:

REMOVED	= RM
RELOCATED	= RL
ABANDONED	= AB
REPLACED & RELOCATED	= RP
RELOCATED & ADJUSTED TO GRADE	= RA
ADJUSTED TO GRADE	= AD
TRIMMED	= T

BY: ⬡ CONTRACTOR ◯ CITY/COUNTY FORCES ☐ OTHERS

NOT FOR CONSTRUCTION

DESIGNED:	SLW
DRAWN:	JRM
CRP:	330422
HORIZ.	1" = 20'
VERT.	1" = 5'
DATE:	5/28/2004
DWG:	PP13
SHEET	38 OF 63

CALL 48 HOURS BEFORE YOU DIG 1-800-424-5555 "It's the Law" NORTHWEST UTILITIES NOTIFICATION CENTER

PAMELA A. EDELMANN STATE OF WASHINGTON 22440 REGISTERED PROFESSIONAL ENGINEER EXPIRES AUG. 31, 2005

otak Incorporated
700 Washington St., Suite 401
Vancouver, WA 98660
PHONE: (360) 737-8651
FAX: (360) 737-9651

DESIGN & ENGINEERING DIVISION
NE 63RD STREET IMPROVEMENTS

PLAN AND PROFILE – NE 72ND AVENUE
STA. 18+00 TO STA. 21+50

proud past, promising future
CLARK COUNTY WASHINGTON

V: SHERYL 05/27/04 5:12pm --> V:\PROJECT\11900\11944\DWG\C9445038.DWG

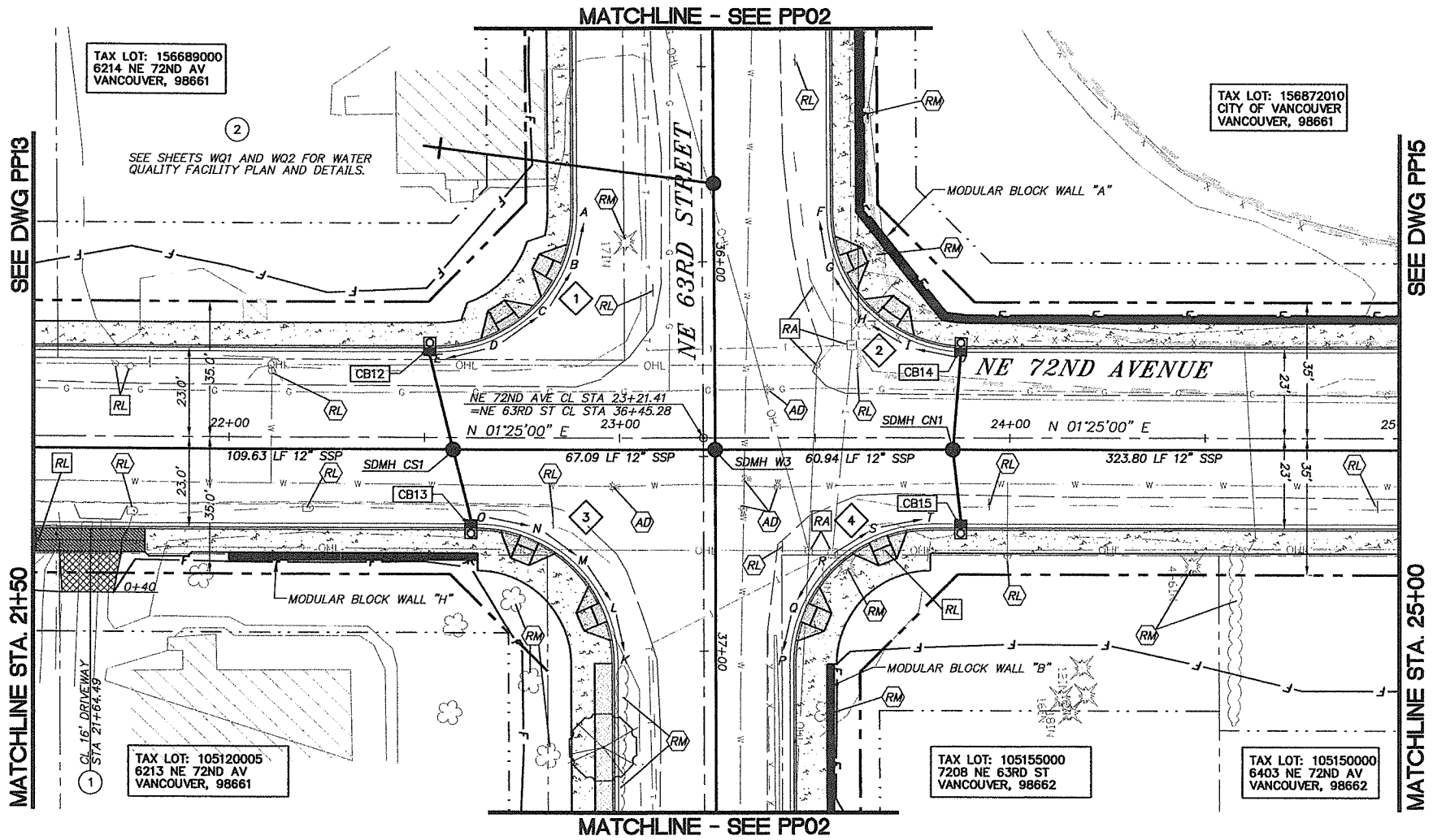

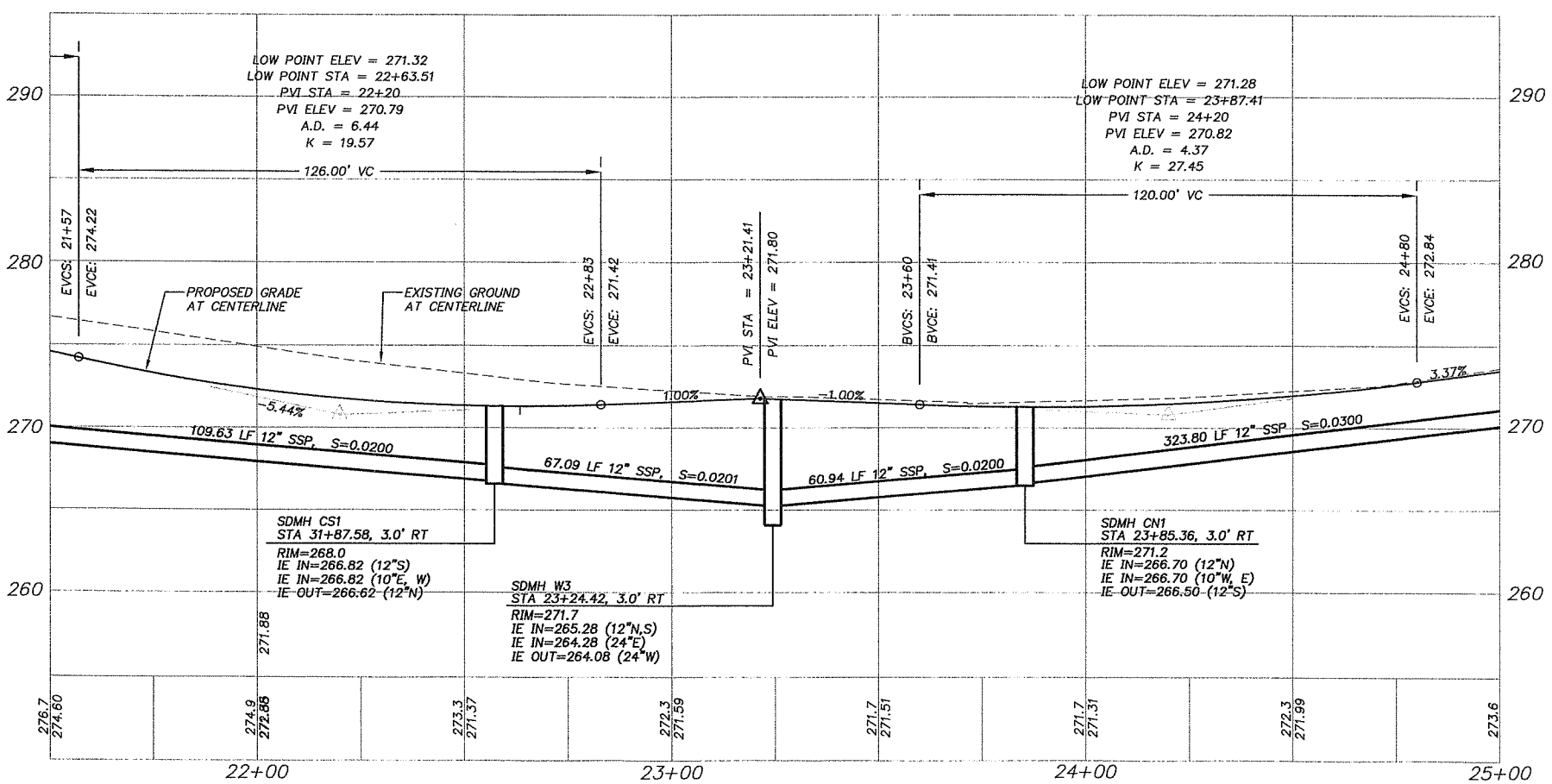

SCALE IN FEET

20 0 20 40

CURB RETURN TABLE

CURVE	STATION/OFFSET	SYMBOL Δ/4	T.O.C. ELEV.
1	BCR 35+86.78	A	270.84
	33.0' RT	B	271.02
		C	271.10
Δ = 90°24'59"			
R = 35.00'	ECR 22+53.00	D	271.18
L = 55.23'	23.0' LT	E	271.28
2	BCR 35+87.77	F	270.85
	33.00' LT	G	270.95
		H	271.08
Δ = 89°35'01"			
R = 35.00'	ECR 23+89.00	I	271.15
L = 54.72'	23.0' LT	J	271.21
3	BCR 37+03.06	K	270.97
	23.0' RT	L	271.04
		M	271.11
Δ = 89°47'03"			
R = 35.00'	ECR 22+63.63	N	271.18
L = 54.85'	23.0' RT	O	271.25
4	BCR 37+03.50	P	270.99
	23.0' LT	Q	271.22
		R	271.36
Δ = 90°12'57"			
R = 35.00'	ECR 23+79.63	S	271.29
L = 55.11'	23.0' RT	T	271.22

CONSTRUCTION NOTES

1. CONSTRUCT TYPE 2 CEMENT CONCRETE DRIVEWAY APPROACH PER CLARK COUNTY STD. PLAN NO. F15
2. SEE SHEET WQ1 FOR STORMWATER FACILITY PLAN AND DETAILS.

CURB INLET INFORMATION

CB12 COMBINATION CURB INLET
ST. STA. 22+51.32, 23.00' LT
T.C. ELEV. = 271.20
I.E. (OUT) = 267.36
27 LF 10" STM. PIPE
S=0.0200 FT/FT

CB13 COMBINATION CURB INLET
ST. STA. 22+61.96 , 23.00' RT
T.C. ELEV. = 271.25
I.E. (OUT) = 267.24
21 LF 10" STM. PIPE
S=0.0205 FT/FT

CB14 COMBINATION CURB INLET
ST. STA. 23+87.41, 23.04' LT
T.C. ELEV. = 271.21
I.E. (OUT) = 267.24
27 LF 10" STM. PIPE
S=0.0200 FT/FT

CB15 COMBINATION CURB INLET
ST. STA. 23+87.41, 23.00' RT
T.C. ELEV. = 271.21
I.E. (OUT) = 267.21
20 LF 10" STM. PIPE
S=0.0255 FT/FT

OBJECT TO BE:

REMOVED	= RM
RELOCATED	= RL
ABANDONED	= AB
REPLACED & RELOCATED	= RP
RELOCATED & ADJUSTED TO GRADE	= RA
ADJUSTED TO GRADE	= AD
TRIMMED	= T

BY: CONTRACTOR / CITY/COUNTY FORCES / OTHERS

NOT FOR CONSTRUCTION

DESIGNED:	SLW
DRAWN:	JRM
CRP:	330422
HORIZ.	1" = 20'
VERT.	1" = 5'
DATE:	5/28/2004
DWG:	PP14
SHEET	39 OF 63

CALL 48 HOURS BEFORE YOU DIG 1-800-424-5555 "It's the Law" NORTHWEST UTILITIES NOTIFICATION CENTER

PAMELA J. WEDEMAN, NW STATE OF WASHINGTON 22446 REGISTERED PROFESSIONAL ENGINEER EXPIRES AUG. 31, 2005

otak Incorporated
700 Washington St. Suite 401
Vancouver, WA 98660
Phone: (360) 737-8613
FAX: (360) 737-9651

DESIGN & ENGINEERING DIVISION
NE 63RD STREET IMPROVEMENTS
PLAN AND PROFILE - NE 72ND STREET
STA. 21+50 TO STA. 25+00

proud past, promising future

CLARK COUNTY WASHINGTON

REF LIST
scale: 20
resolved
944x001_border
944x500
944x510
XW WASH
944b104
944b106
944B200

V: SHERYL 05/28/04 8:57am ---> V:\PROJECT\11900\11944\DWG\C9445039.DWG

REF LIST
scale: 20
resolved
944x001_border
944x500
944x510
CW WASH
944b104
944b106
944B200

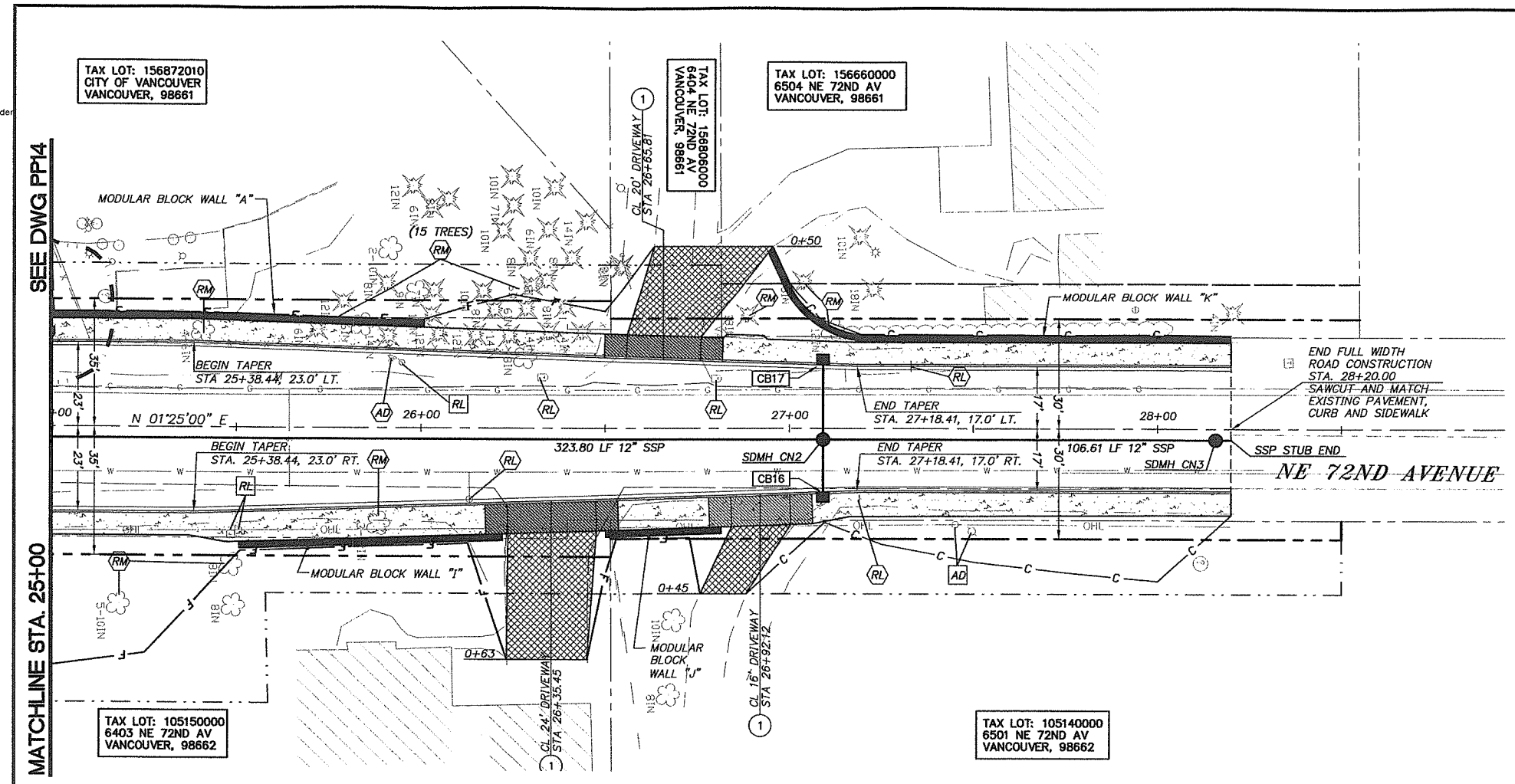

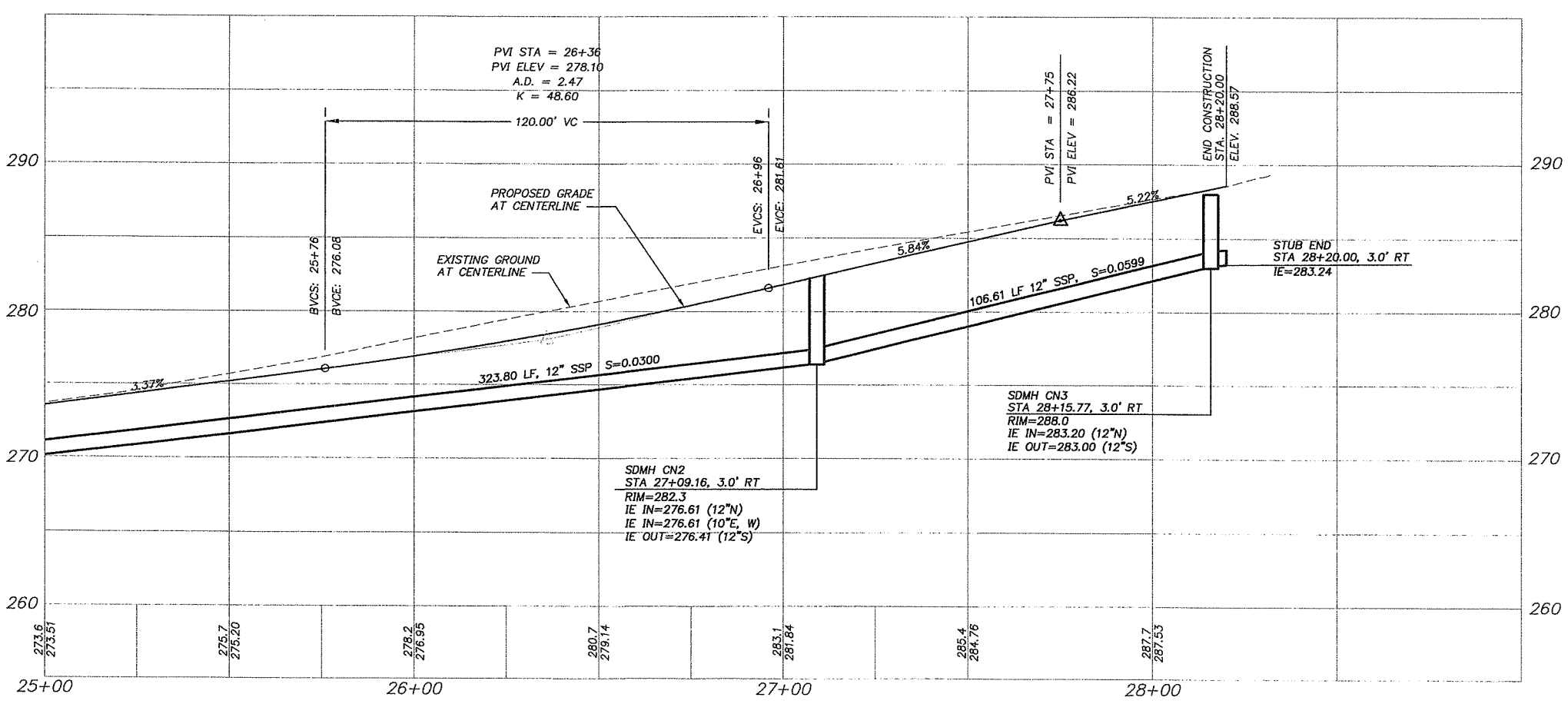

SCALE IN FEET

20 0 20 40

CONSTRUCTION NOTES

1. CONSTRUCT TYPE 3 CEMENT CONCRETE DRIVEWAY APPROACH PER CLARK COUNTY STD. PLAN NO. F16

CURB INLET INFORMATION

CB16
CURB INLET
ST. STA. 27+09.16, 17.31' RT
T.C. ELEV. = 282.30
I.E. (OUT) = 277.30
15 LF 10" STM. PIPE
S=0.0460 FT/FT

CB17
CURB INLET
ST. STA. 27+09.16, 17.31' LT
T.C. ELEV. = 282.52
I.E. (OUT) = 277.52
21 LF 10" STM. PIPE
S=0.0433 FT/FT

OBJECT TO BE:

REMOVED	= RM
RELOCATED	= RL
ABANDONED	= AB
REPLACED & RELOCATED	= RP
RELOCATED & ADJUSTED TO GRADE	= RA
ADJUSTED TO GRADE	= AD
TRIMMED	= T

BY: ⬡ CONTRACTOR ◯ CITY/COUNTY FORCES ☐ OTHERS

NOT FOR CONSTRUCTION

DESIGNED:	SLW
DRAWN:	JRM
CRP:	330422
HORIZ.	1" = 20'
VERT.	1" = 5'
DATE:	5/28/2004
DWG:	PP15
SHEET	40 OF 63

CALL 48 HOURS BEFORE YOU DIG 1-800-424-5555 "It's the Law" NORTHWEST UTILITIES NOTIFICATION CENTER

PAUL E. WEIDEMANN STATE OF WASHINGTON 22445 REGISTERED PROFESSIONAL ENGINEER EXPIRES AUG. 31, 2005

otak Incorporated
700 Washington St. Suite 401
Vancouver, WA 98660
Phone: (360) 737-9613
FAX: (360) 737-9651

DESIGN & ENGINEERING DIVISION
NE 63RD STREET IMPROVEMENTS

PLAN AND PROFILE – NE 72ND STREET
STA. 25+00 TO STA. 28+50

proud past, promising future
CLARK COUNTY WASHINGTON

V: SHERYL 05/27/04 5:14pm --> V:\PROJECT\11900\11944\DWG\C944S040.DWG

REF LIST
tscale: 20
esolved
944x001_border
944x500
944x510
arcelNumbers
KW WASH
944b104
944b106
944B200

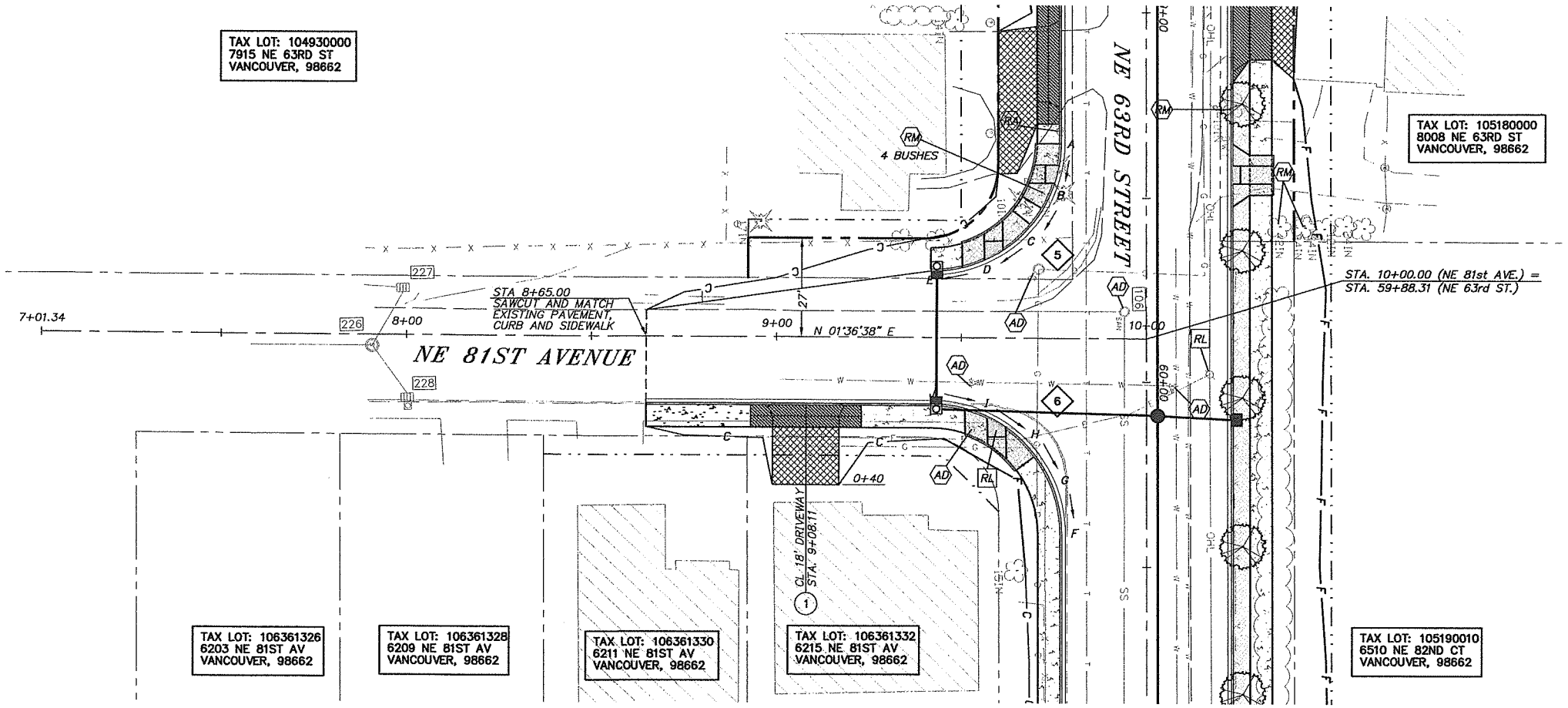

SCALE IN FEET
20 0 20 40

CURB RETURN TABLE

CURVE	STATION/OFFSET	SYMBOL △/4	T.O.C. ELEV.
5	BCR 59+34.92	A	275.50
	23.0' RT	B	275.16
		C	274.60
Δ = 90°23'23"			
R = 35.00'	ECR 9+41.64	D	274.48
L = 55.22'	18.0' RT	E	274.35
6	BCR 60+40.92	F	273.98
	23.0 RT	G	274.08
Δ = 89°36'37"		H	274.16
R = 35.00'	ECR 9+42.36	I	274.24
L = 54.74'	18.0' LT	J	274.33

CONSTRUCTION NOTES

1. CONSTRUCT TYPE 2 CEMENT CONCRETE DRIVEWAY APPROACH PER CLARK COUNTY STD. PLAN NO. F15

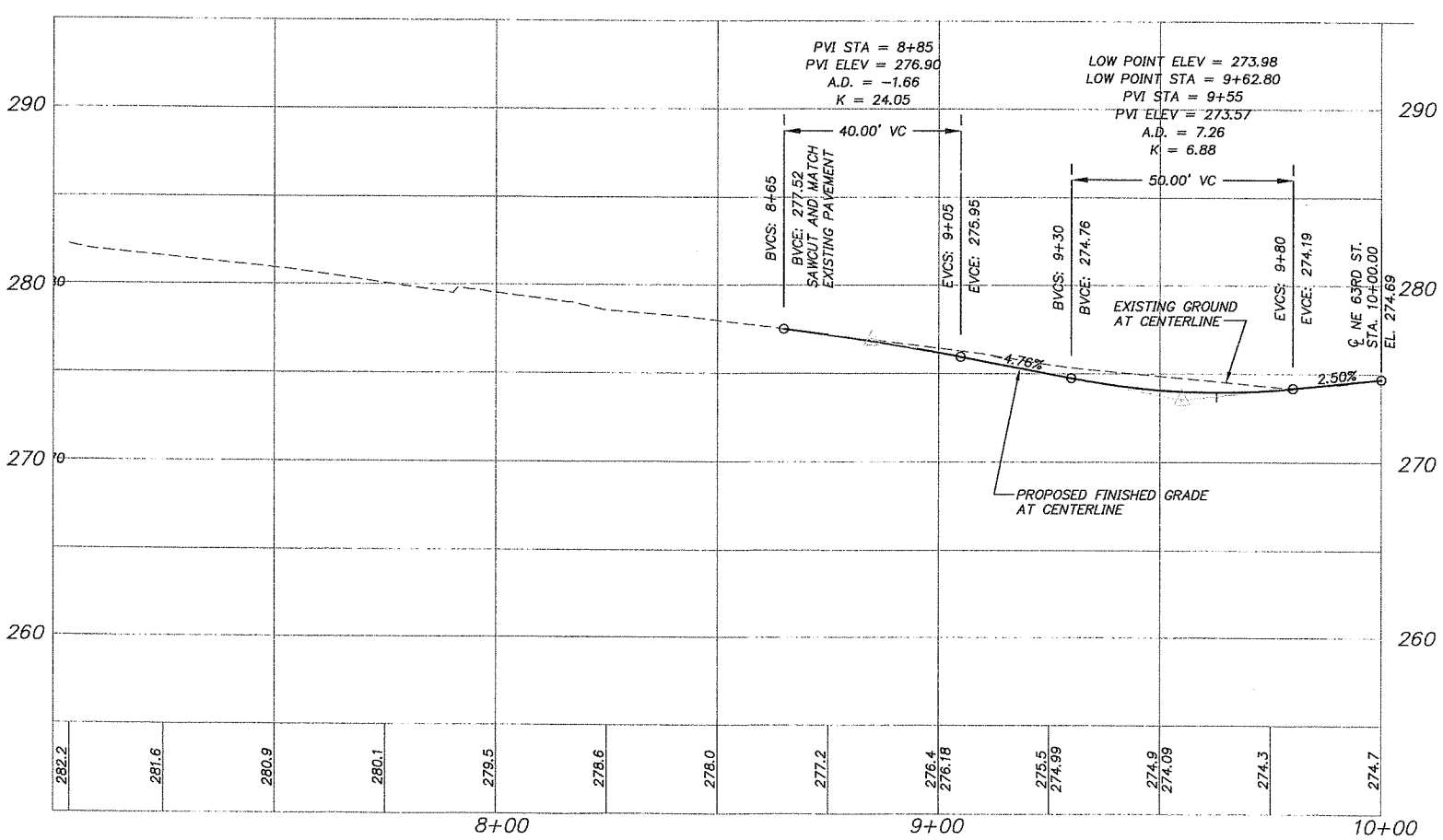

OBJECT TO BE:

REMOVED	= RM
RELOCATED	= RL
ABANDONED	= AB
REPLACED & RELOCATED	= RP
RELOCATED & ADJUSTED TO GRADE	= RA
ADJUSTED TO GRADE	= AD
TRIMMED	= T

BY: ⬡ CONTRACTOR ○ CITY/COUNTY FORCES □ OTHERS

NOT FOR CONSTRUCTION

DESIGNED:	SLW
DRAWN:	JRM
CRP:	330422
HORIZ.	1" = 20'
VERT.	1" = 5'
DATE:	5/28/2004
DWG:	PP16
SHEET	41 OF 63

CALL 48 HOURS BEFORE YOU DIG 1-800-424-5555 "It's the Law" NORTHWEST UTILITIES NOTIFICATION CENTER

PAMELA E. EDEMANN, STATE OF WASHINGTON, 22440, REGISTERED PROFESSIONAL ENGINEER, EXPIRES AUG. 31, 2005

oak Incorporated
700 Washington St., Suite 401
Vancouver, WA 98660
Phone: (360) 737-8663
FAX: (360) 737-8651

DESIGN & ENGINEERING DIVISION
NE 63RD STREET IMPROVEMENTS

PLAN AND PROFILE
NE 81ST AVENUE

proud past, promising future
CLARK COUNTY WASHINGTON

V: SADIE 02/24/04 2:59pm --> R:\DWG\G944S036.DWG

REF LIST
tscale: 20
esolved
944x001_border
944x500
944x510
KW WASH
944b104
944b106
944B200

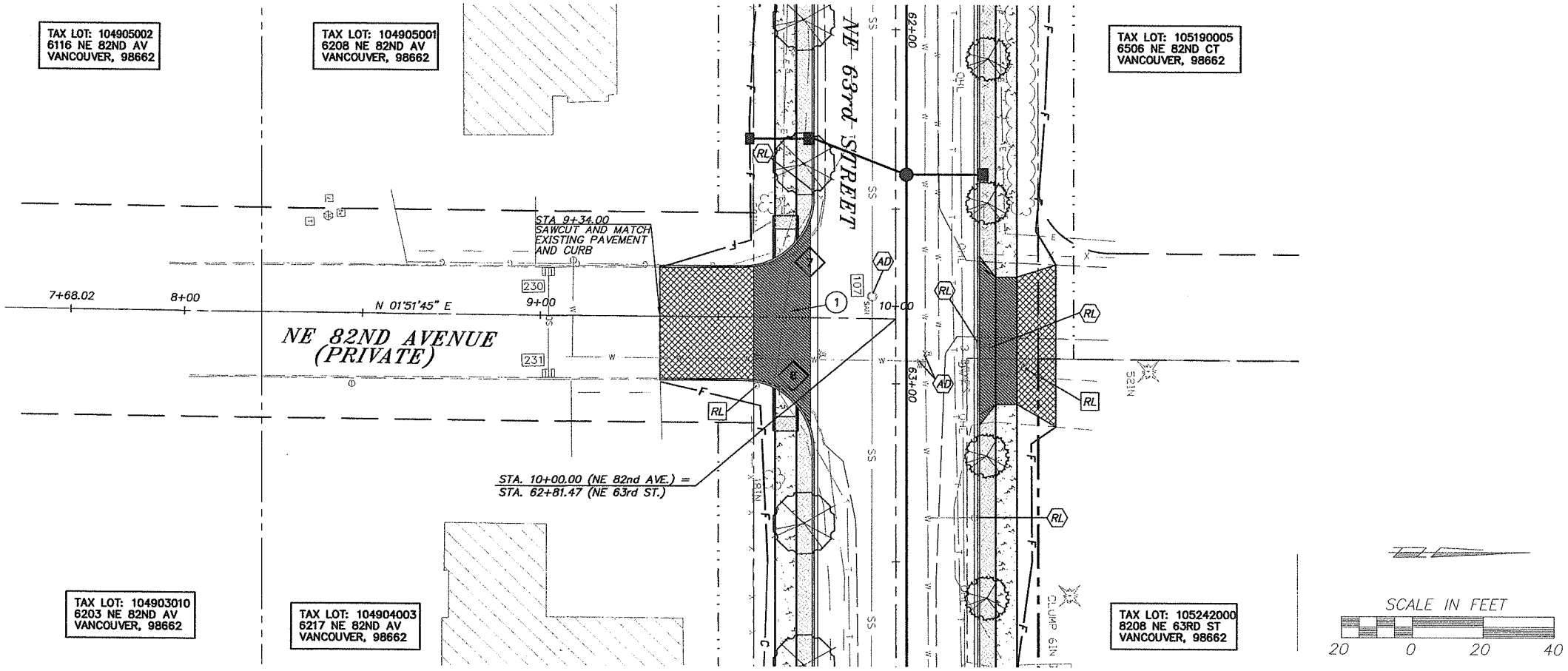

CURB RETURN TABLE

CURVE	STATION/OFFSET
7 Δ = 90°16'57" R = 20.00' L = 28.35'	BCR 62+46.93 23.0' RT ECR 9+56.75 14.0' LT
8 Δ =89°30'51" R = 20.00' L = 28.16'	BCR 63+18.52 23.0' RT ECR 9+57.37 17.6' RT

CONSTRUCTION NOTES

1. CONSTRUCT COMMERCIAL CONCRETE DRIVEWAY APPROACH PER CLARK COUNTY STD. PLAN NO. F17 ON SHEET D02.

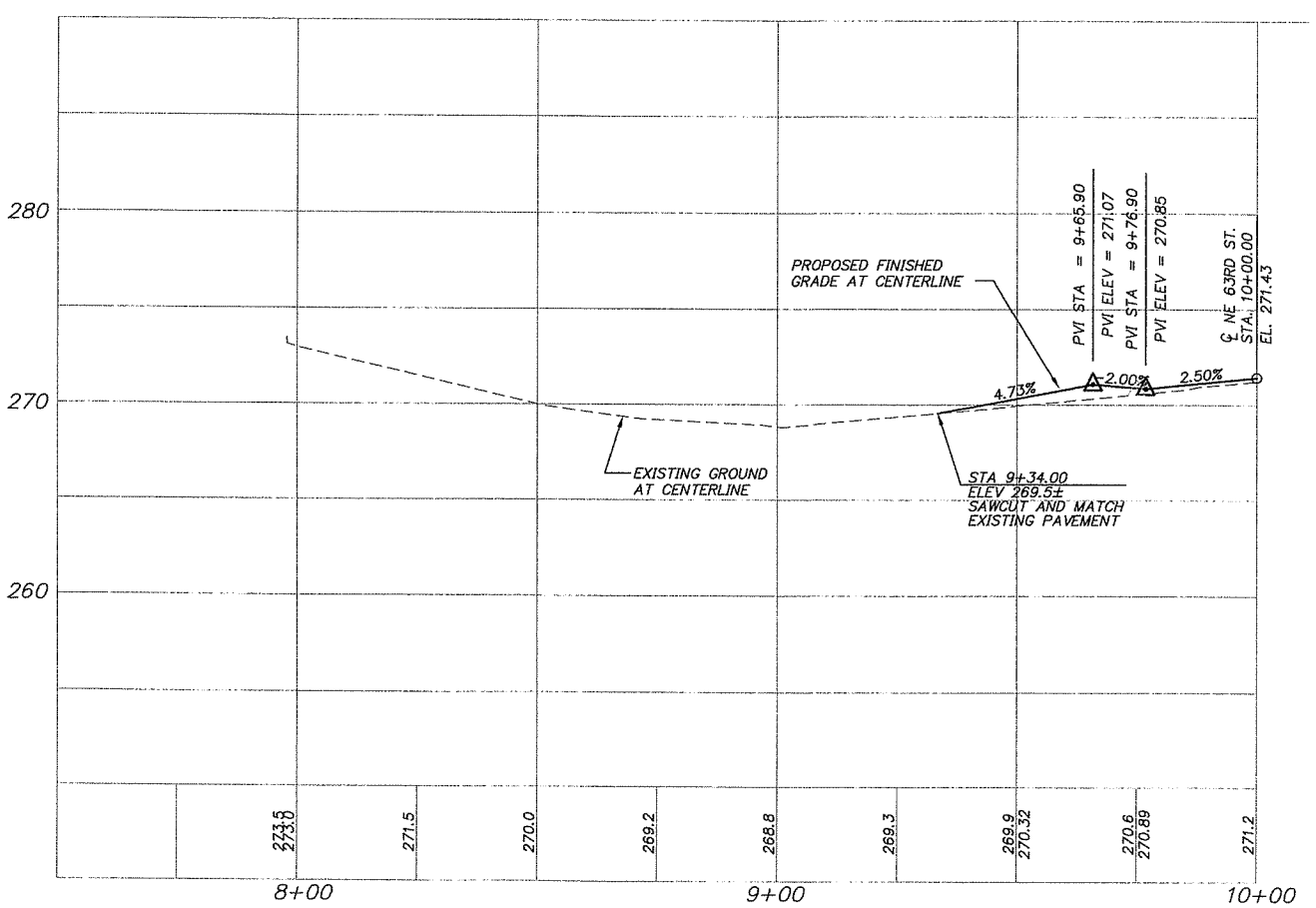

OBJECT TO BE:

REMOVED	= RM
RELOCATED	= RL
ABANDONED	= AB
REPLACED & RELOCATED	= RP
RELOCATED & ADJUSTED TO GRADE	= RA
ADJUSTED TO GRADE	= AD
TRIMMED	= T

BY: CONTRACTOR / CITY/COUNTY FORCES / OTHERS

NOT FOR CONSTRUCTION

DESIGNED:	SLW
DRAWN:	JRM
CRP:	330422
HORIZ.	1" = 20'
VERT.	1" = 5'
DATE:	5/28/2004
DWG:	PP17
SHEET	42 OF 63

CALL 48 HOURS BEFORE YOU DIG
1-800-424-5555
"It's the Law"
NORTHWEST UTILITIES NOTIFICATION CENTER

PAUL E. LEHMANN
STATE OF WASHINGTON
22440
PROFESSIONAL ENGINEER
EXPIRES AUG. 31, 2005

oak Incorporated
700 Washington St. Suite 401
Vancouver, WA 98660
Phone: (360) 737-8863
FAX: (360) 737-9851

DESIGN & ENGINEERING DIVISION
NE 63RD STREET IMPROVEMENTS

PLAN AND PROFILE
NE 82ND AVENUE

proud past, promising future
CLARK COUNTY
WASHINGTON

V: SADIE 02/24/04 3:00pm --> R:\DWG\C944S037.DWG

:REF LIST
tscale: 20
:esolved
:944x001_border
:944x500
:944x510
944X700
:KW WASH
:944b104
:944b106
:944B200

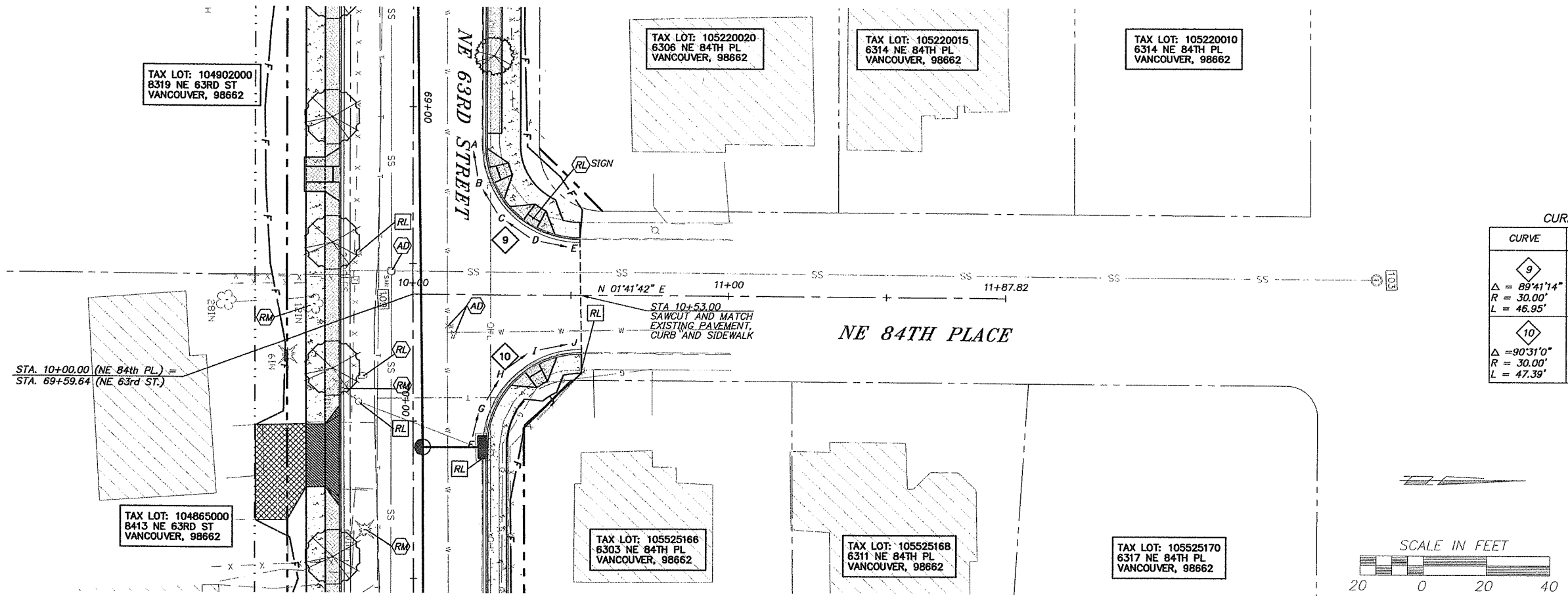

CURB RETURN TABLE

CURVE	STATION/OFFSET	SYMBOL Δ/4	T.O.C. ELEV.
9	BCR 69+12.13 23.0' LT	A	269.05
		B	269.36
Δ = 89°41'14"		C	269.50
R = 30.00'	ECR 10+52.71 17.8' LT	D	269.60
L = 46.95'		E	269.47
10	BCR 70+08.32 23.0' LT	F	271.95
		G	271.45
Δ =90°31'0"		H	270.65
R = 30.00'	ECR 10+53.44 18.2' RT	I	269.87
L = 47.39'		J	269.46

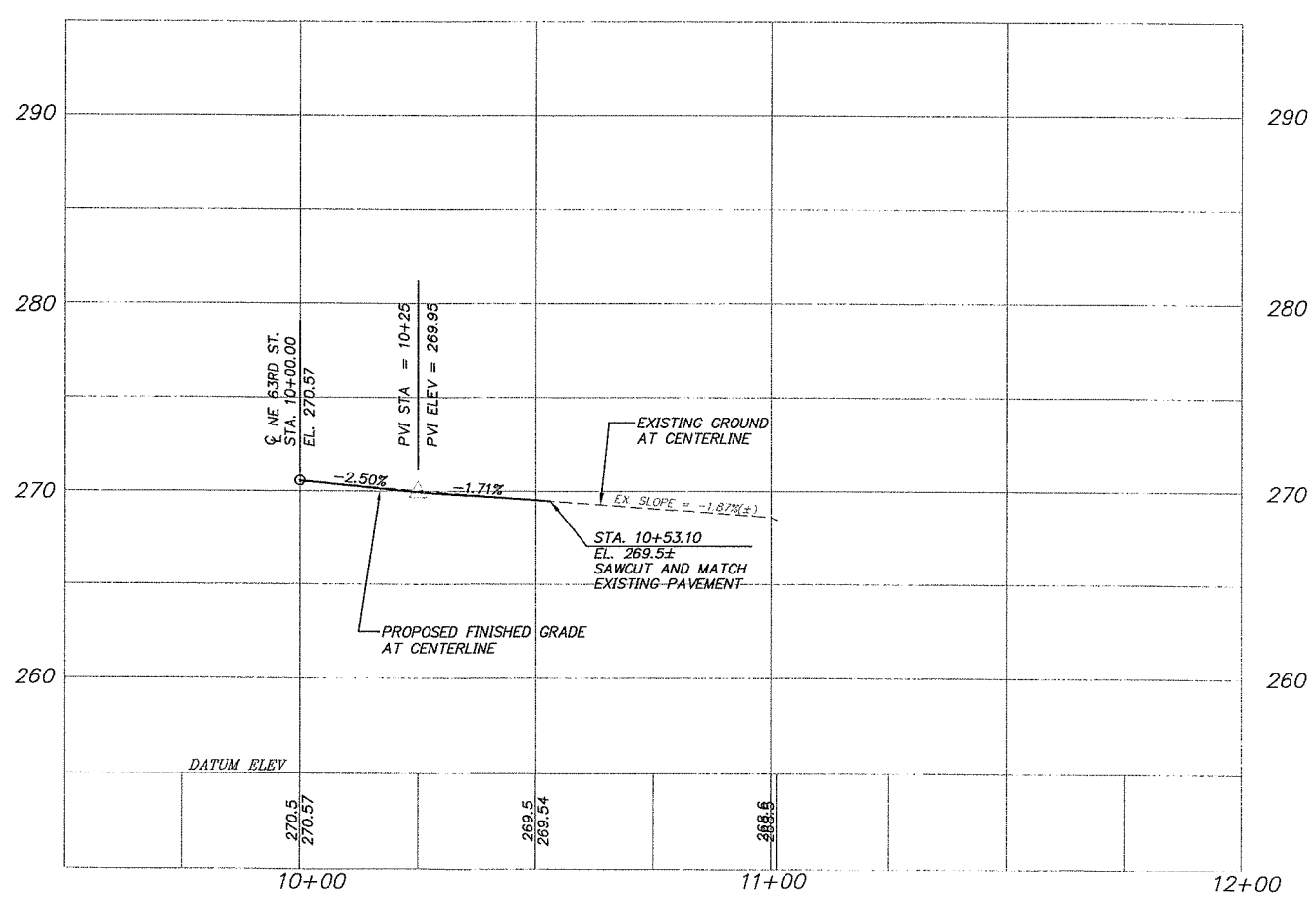

OBJECT TO BE:

REMOVED	= RM
RELOCATED	= RL
ABANDONED	= AB
REPLACED & RELOCATED	= RP
RELOCATED & ADJUSTED TO GRADE	= RA
ADJUSTED TO GRADE	= AD
TRIMMED	= T

BY: CONTRACTOR / CITY/COUNTY FORCES / OTHERS

NOT FOR CONSTRUCTION

DESIGN & ENGINEERING DIVISION
NE 63RD STREET IMPROVEMENTS

PLAN AND PROFILE
NE 84TH PLACE

DESIGNED:	SLW
DRAWN:	JRM
CRP:	330422
HORIZ	1" = 20'
VERT:	1" = 5'
DATE:	5/28/2004
DWG:	PP18
SHEET	4.3 OF 63

CALL 48 HOURS BEFORE YOU DIG
1-800-424-5555
"It's the Law"
NORTHWEST UTILITIES NOTIFICATION CENTER

PAMELA K. EDMANN
STATE OF WASHINGTON
22440
REGISTERED PROFESSIONAL ENGINEER
EXPIRES AUG. 31, 2005

otak Incorporated
700 Washington St., Suite 401
Vancouver, WA 98660
Phone: (360) 737-8953
FAX: (360) 737-9851

proud past, promising future
CLARK COUNTY
WASHINGTON

V: SHERYL 05/27/04 5:18pm ---> V:\PROJECT\11900\11944\DWG\C944S043.DWG

REF LIST
scale: 20
resolved
944x001_border
944x500
944x510
944X700
CW WASH
944b104
944b106
944B200

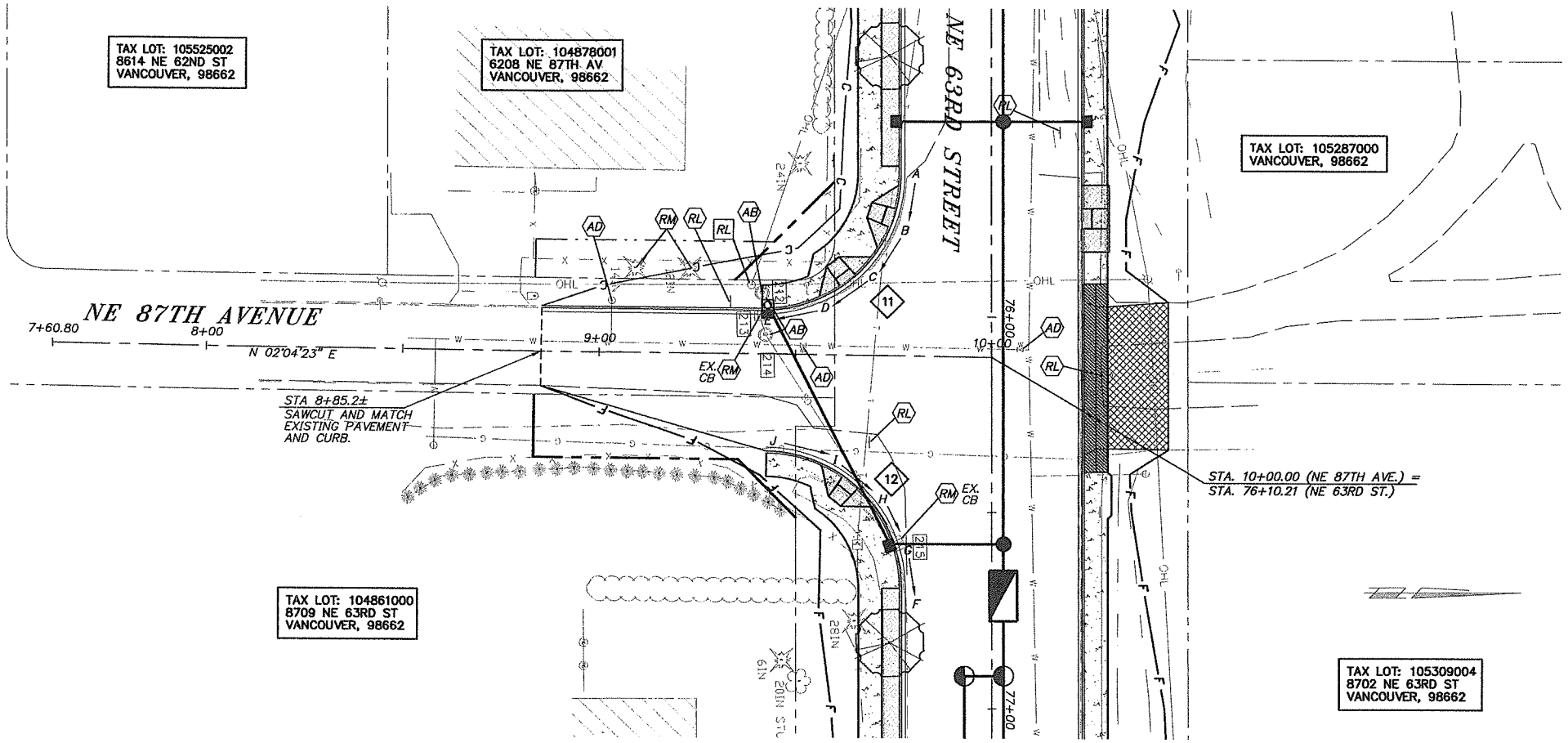

SCALE IN FEET

20 0 20 40

CURB RETURN TABLE

CURVE	STATION/OFFSET	SYMBOL	T.O.C. ELEV.
11	BCR 75+63.16	A	265.26
	23.0' RT	B	264.52
Δ = 90°52'25"		C	263.54
R = 35.00'	ECR 9+41.29	D	262.75
L = 55.51'	11.2' RT	E	262.55
12	BCR 76+69.24	F	260.72
	23.0' RT	G	261.29
Δ = 89°11'38"		H	261.73
R = 35.00'	ECR 9+42.87	I	262.04
L = 54.49'	24.9' LT	J	262.21

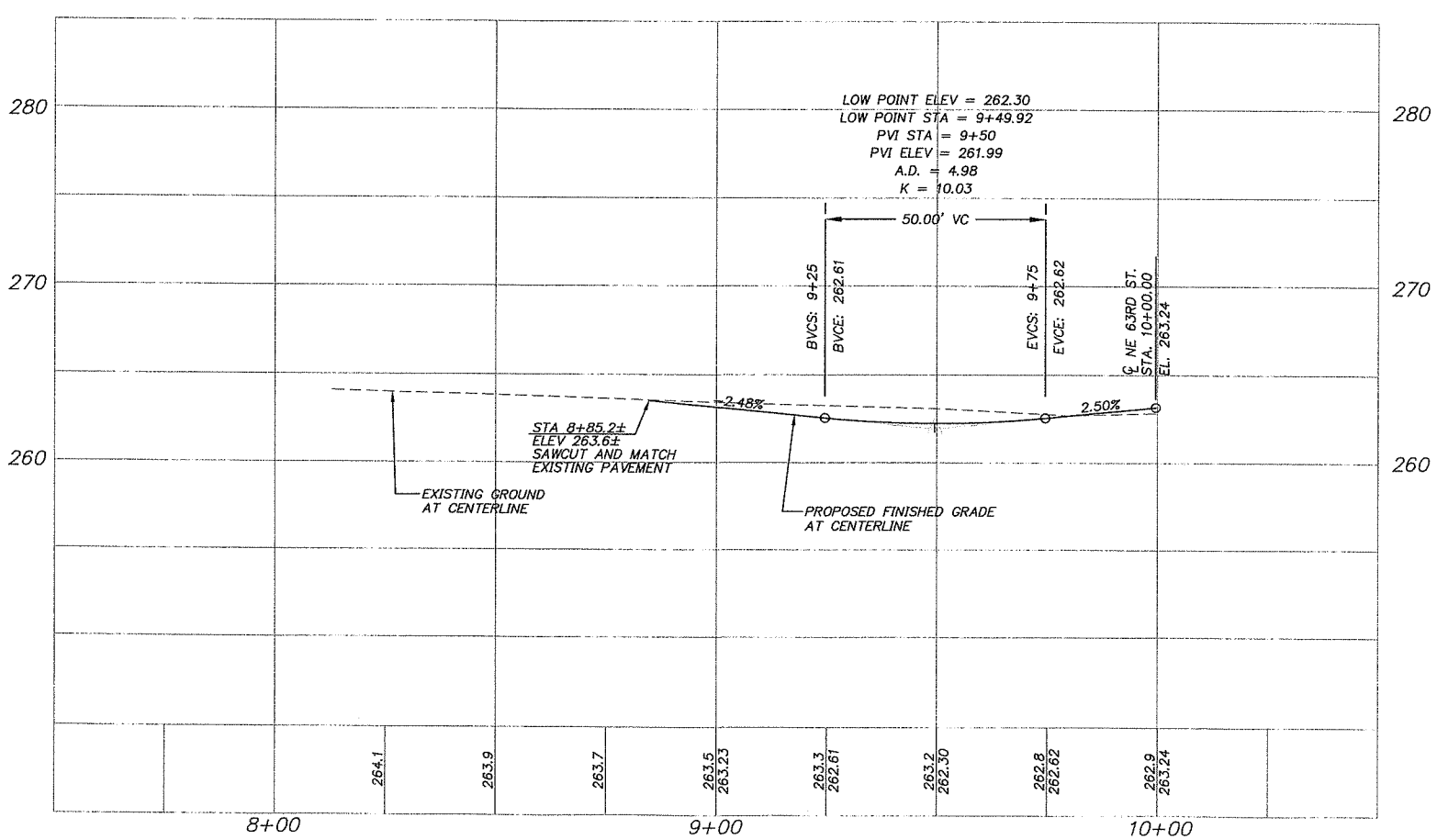

OBJECT TO BE:

REMOVED	=	RM
RELOCATED	=	RL
ABANDONED	=	AB
REPLACED & RELOCATED	=	RP
RELOCATED & ADJUSTED TO GRADE	=	RA
ADJUSTED TO GRADE	=	AD
TRIMMED	=	T

BY: ⬡ CONTRACTOR ◯ CITY/COUNTY FORCES ☐ OTHERS

NOT FOR CONSTRUCTION

DESIGNED: SLW
DRAWN: GME
CRP: 330422
HORIZ. 1" = 20'
VERT. 1" = 5'
DATE: 5/28/2004
DWG: PP19
SHEET 44 OF 63

CALL 48 HOURS BEFORE YOU DIG 1-800-424-5555 "It's the Law" NORTHWEST UTILITIES NOTIFICATION CENTER

PAMELA J. WIEDEMANN STATE OF WASHINGTON 22440 REGISTERED PROFESSIONAL ENGINEER
EXPIRES AUG. 31, 2005

oak Incorporated
700 Washington St., Suite 401
Vancouver, WA 98660
Phone: (360) 737-9613
FAX: (360) 737-9651

DESIGN & ENGINEERING DIVISION
NE 63RD STREET IMPROVEMENTS

PLAN AND PROFILE
NE 87TH AVENUE

proud past, promising future
CLARK COUNTY WASHINGTON

V: SHERYL 05/27/04 5:19pm --> V:\PROJECT\11900\11944\DWG\C944S044.DWG

REF LIST
tscale: 20
esolved
944x001_border
944x500
944x510
944X700
KW WASH
944b104
944b106
944B200

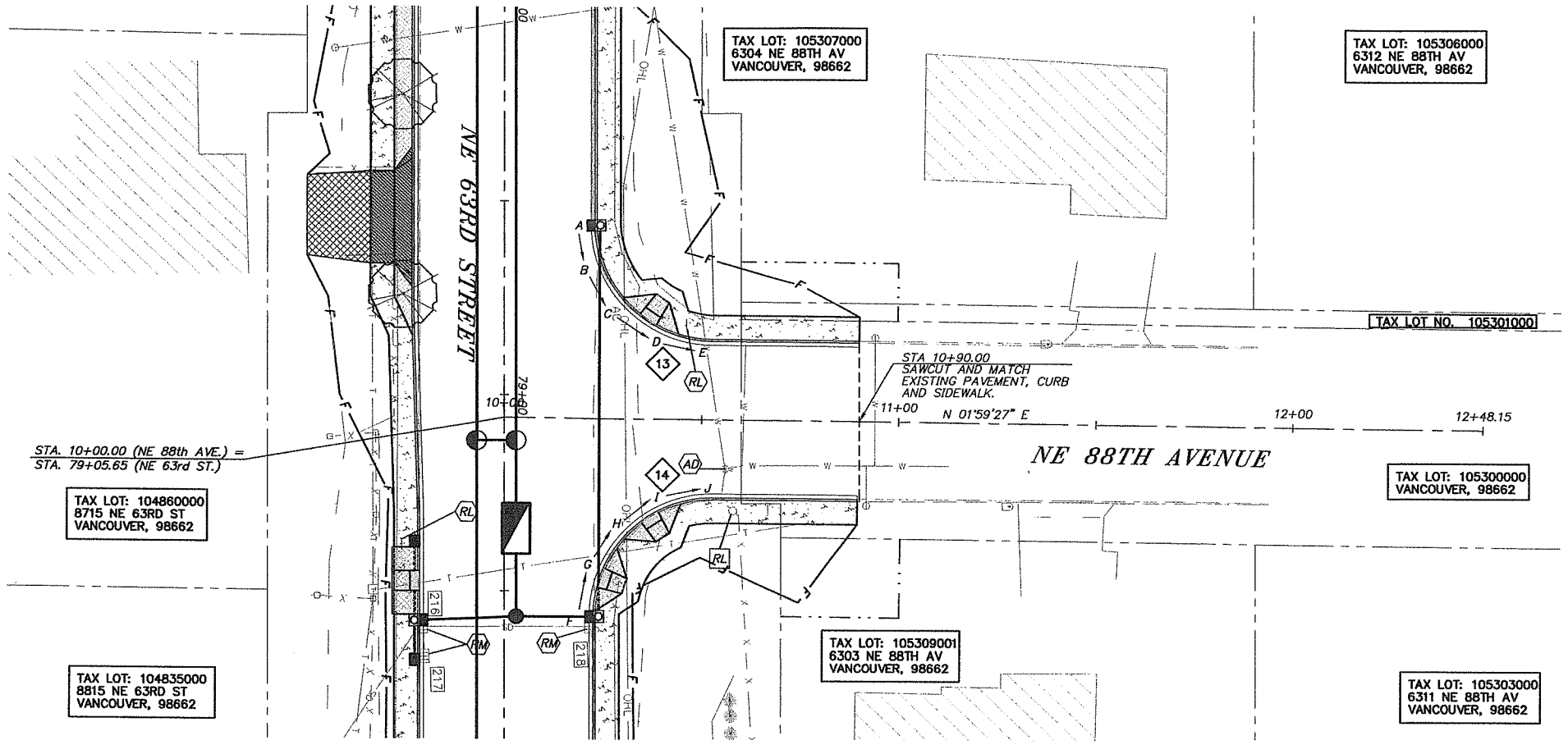

CURB RETURN TABLE

CURVE	STATION/OFFSET	SYMBOL Δ/4	T.O.C. ELEV.
13	BCR 78+56.38	A	256.03
	23.0' LT	B	255.72
Δ = 89°15'46"		C	255.16
R = 30.00'	ECR 10+52.35	D	254.56
L = 46.74'	20.0' LT	E	253.97
14	BCR 79+56.38	F	255.36
	22.5' LT	G	255.00
Δ =90°44'14"		H	254.65
R = 30.00'	ECR 10+53.16	I	254.29
L = 47.51'	20.0' RT	J	253.93

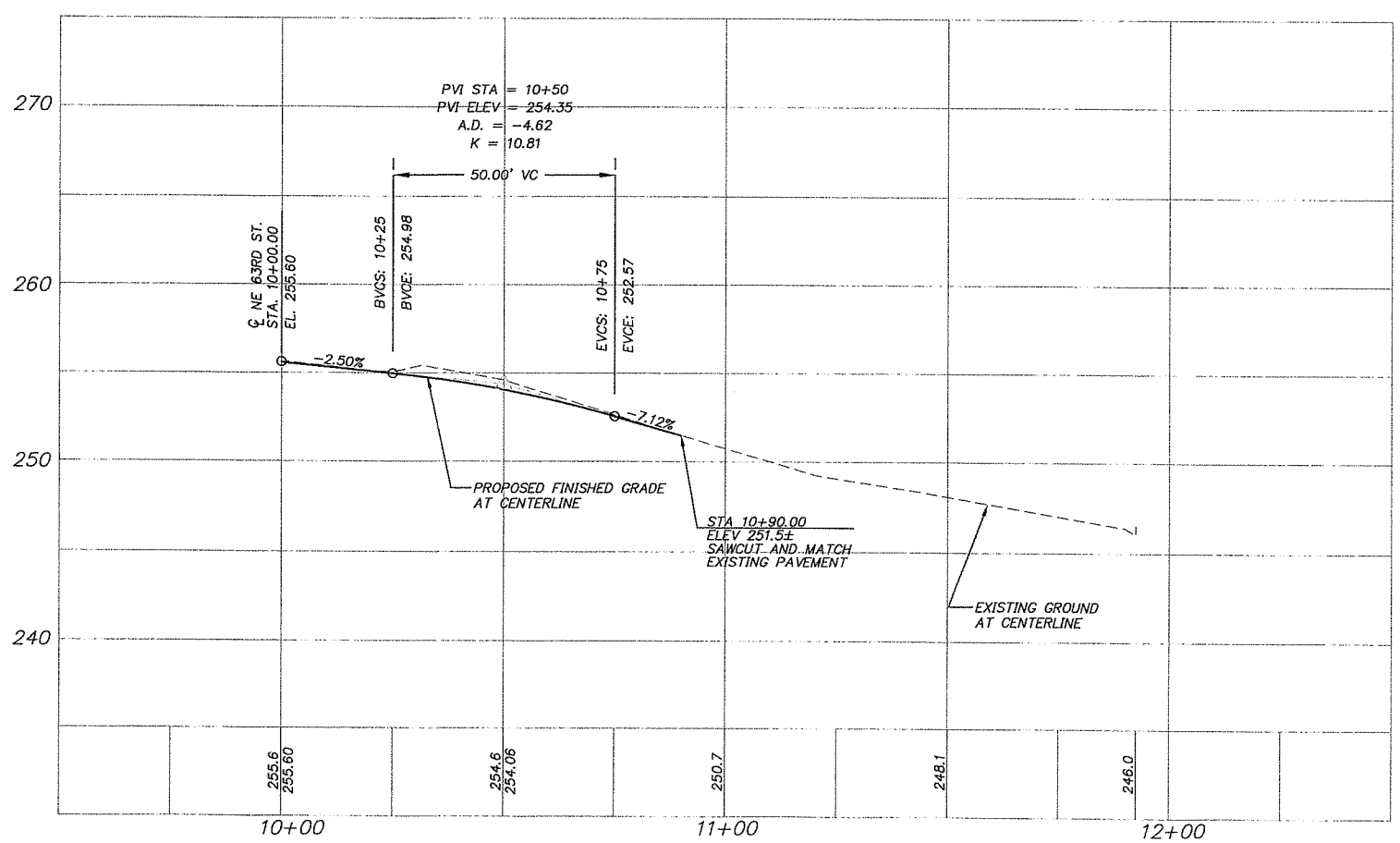

OBJECT TO BE:

REMOVED	= RM
RELOCATED	= RL
ABANDONED	= AB
REPLACED & RELOCATED	= RP
RELOCATED & ADJUSTED TO GRADE	= RA
ADJUSTED TO GRADE	= AD
TRIMMED	= T

BY: CONTRACTOR / CITY/COUNTY FORCES / OTHERS

NOT FOR CONSTRUCTION

DESIGNED:	SLW
DRAWN:	JRM
CRP:	330422
HORIZ.	1" = 20'
VERT.	1" = 5'
DATE:	5/28/2004
DWG:	PP20
SHEET	45 OF 63

CALL 48 HOURS BEFORE YOU DIG
1-800-424-5555
"It's the Law"
NORTHWEST UTILITIES NOTIFICATION CENTER

PAMELA A. LEDEMANN
STATE OF WASHINGTON
22440
PROFESSIONAL ENGINEER
EXPIRES AUG. 31, 2005

Oak Incorporated
700 Washington St., Suite 401
Vancouver, WA 98660
Phone: (360) 737-8661
FAX: (360) 737-9651

DESIGN & ENGINEERING DIVISION
NE 63RD STREET IMPROVEMENTS

PLAN AND PROFILE
NE 88TH AVENUE

proud past, promising future
CLARK COUNTY
WASHINGTON

V: SHERYL 05/27/04 5:20pm --> V:\PROJECT\11900\11944\DWG\C9445045.DWG

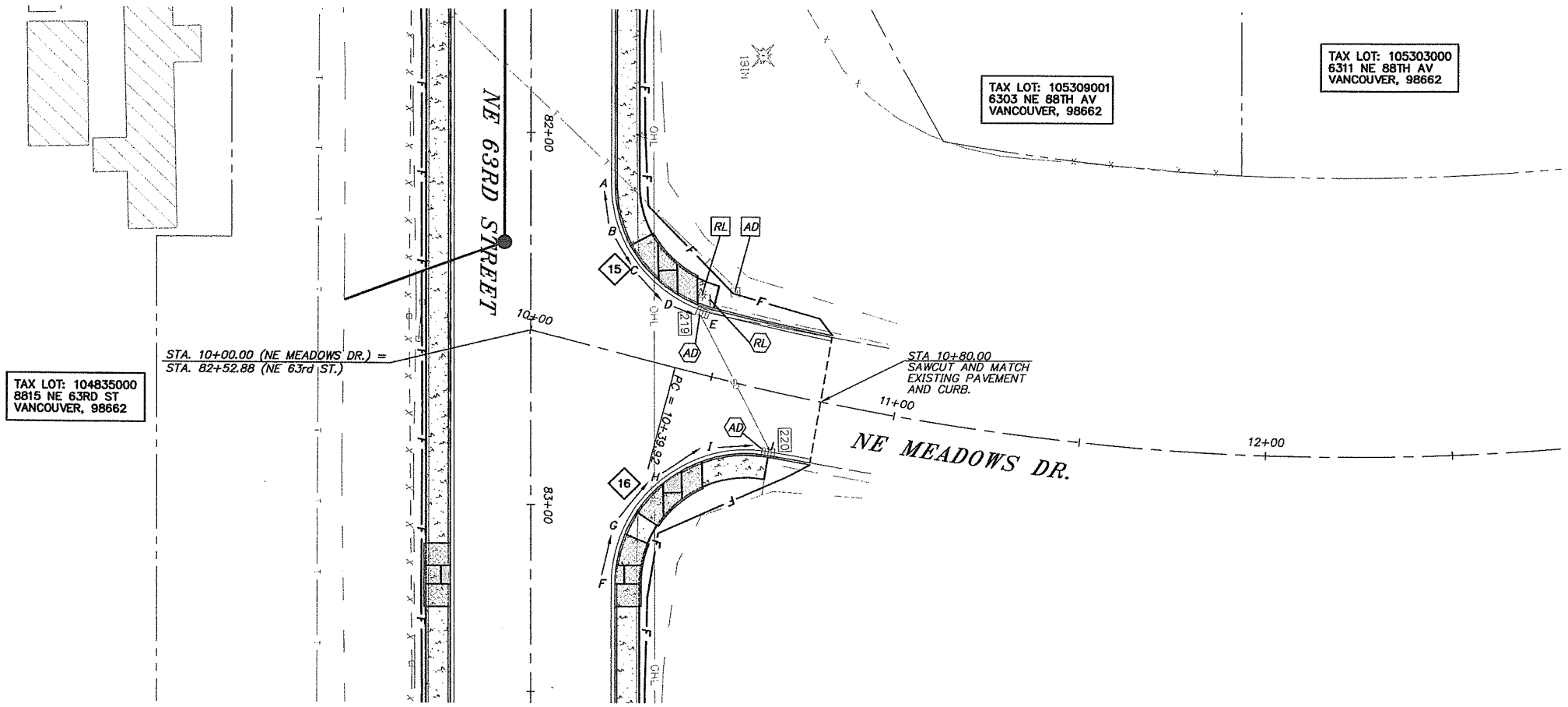

SCALE IN FEET

20 0 20 40

CURB RETURN TABLE

CURVE	STATION/OFFSET	SYMBOL Δ/4	T.O.C. ELEV.
15	BCR 82+13+74	A	258.36
	22.5' LT	B	258.42
Δ = 75°29'10"		C	258.32
R = 35.00'	ECR 10+45.86	D	258.06
L = 46.11'	17.66' LT	E	257.67
16	BCR 83+21.32	F	259.23
	22.5' LT	G	258.83
Δ =99°50'41"		H	258.14
R = 35.00'	ECR 10+69.40	I	257.45
L = 60.99'	17.0' RT	J	256.76

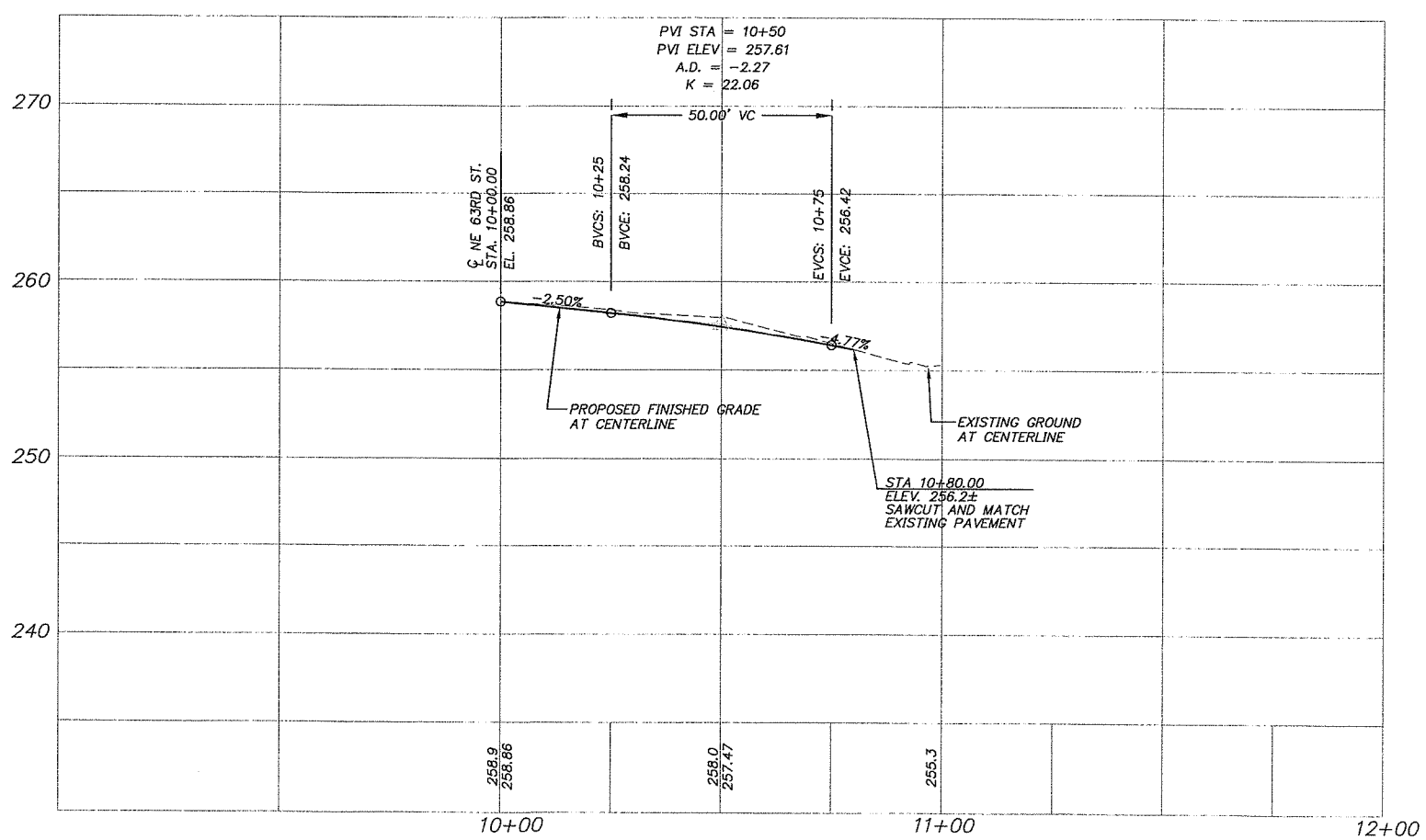

OBJECT TO BE:

REMOVED	= RM
RELOCATED	= RL
ABANDONED	= AB
REPLACED & RELOCATED	= RP
RELOCATED & ADJUSTED TO GRADE	= RA
ADJUSTED TO GRADE	= AD
TRIMMED	= T

BY: CONTRACTOR / CITY/COUNTY FORCES / OTHERS

NOT FOR CONSTRUCTION

DESIGN & ENGINEERING DIVISION
NE 63RD STREET IMPROVEMENTS

PLAN AND PROFILE
NE MEADOWS DRIVE

CLARK COUNTY WASHINGTON
proud past, promising future

oak Incorporated
700 Washington St. Suite 401
Vancouver, WA 98660
Phone: (360) 797-9613
FAX: (360) 797-9801

PAMELA J. LEDEMANN — STATE OF WASHINGTON — 22440 — PROFESSIONAL ENGINEER
EXPIRES AUG. 31, 2005

CALL 48 HOURS BEFORE YOU DIG
1-800-424-5555
"It's the Law"
NORTHWEST UTILITIES NOTIFICATION CENTER

DESIGNED:	SLW
DRAWN:	JRM
CRP:	330422
HORIZ.	1" = 20'
VERT.	1" = 5'
DATE:	5/28/2004
DWG:	PP21
SHEET	46 OF 63

REF LIST
tscale: 20
tesolved
944x001_border
944x500
944x510
944X700
KW WASH
944b104
944b106
944B200

V: SHERYL 05/27/04 5:21pm --> V:\PROJECT\11900\11944\DWG\S944S046.DWG

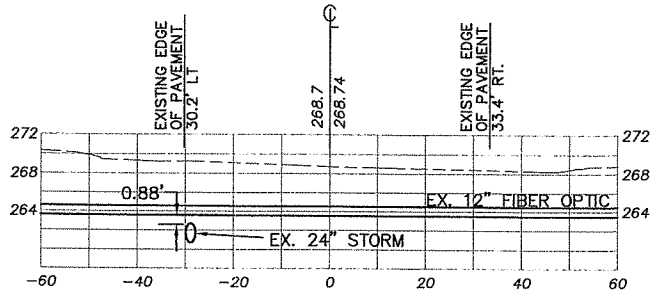

29+64
(63rd ST)

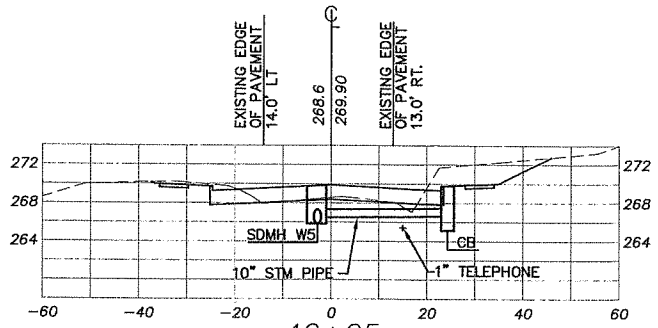

42+25
(63rd ST)

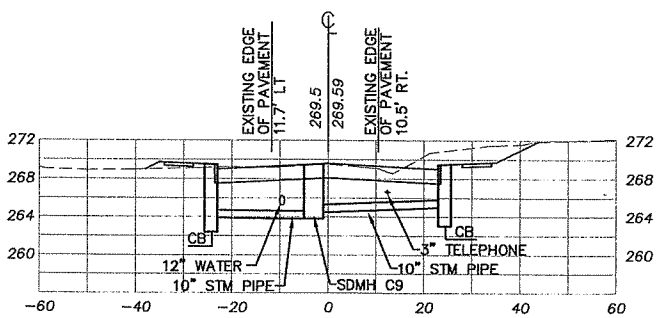

64+50
(63rd ST)

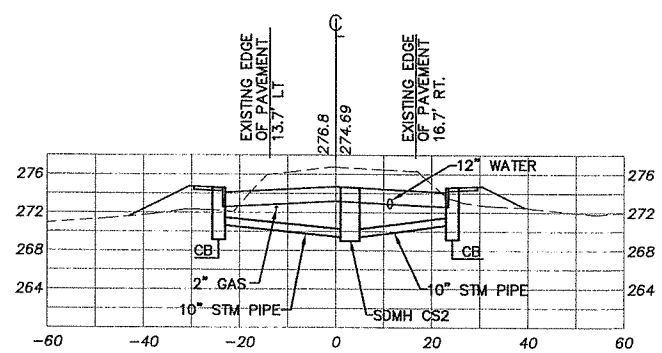

21+48.32
(72nd AVE)

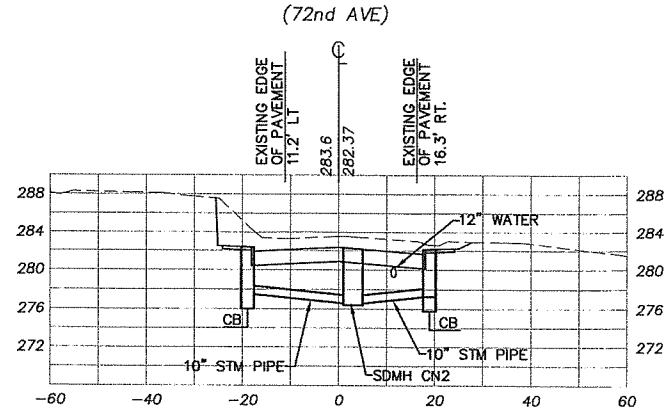

27+09.16
(72nd AVE)

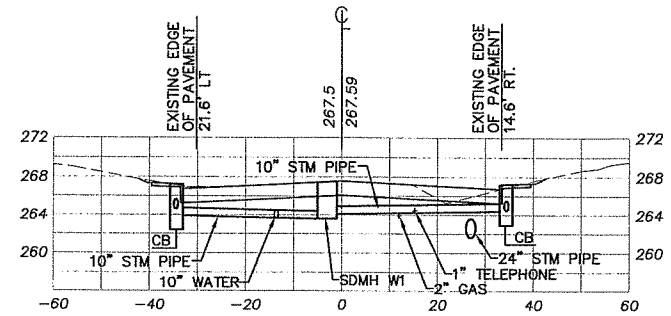

33+00
(63rd ST)

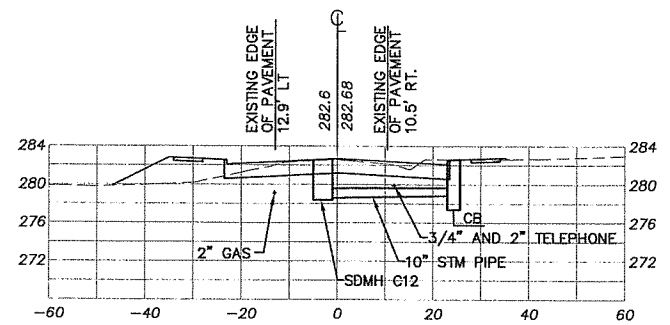

55+00
(63rd ST)

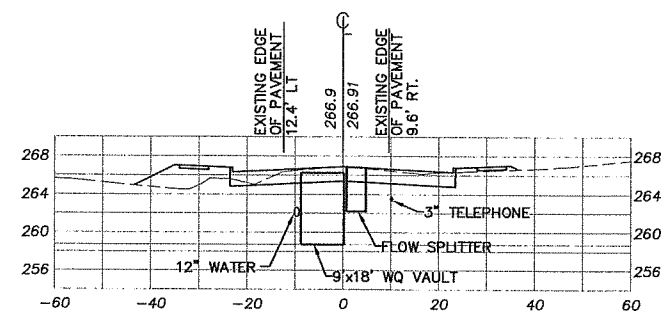

67+57.85
(63rd ST)

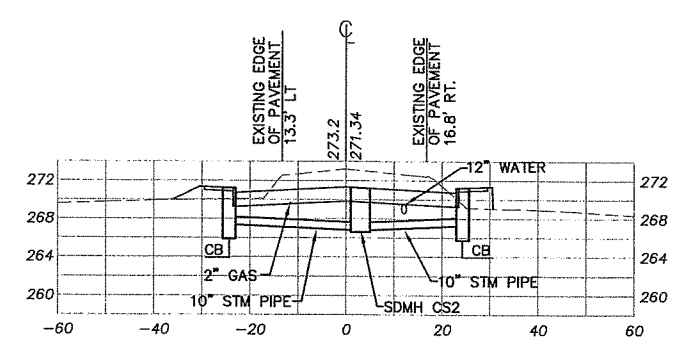

22+55
(72nd AVE)

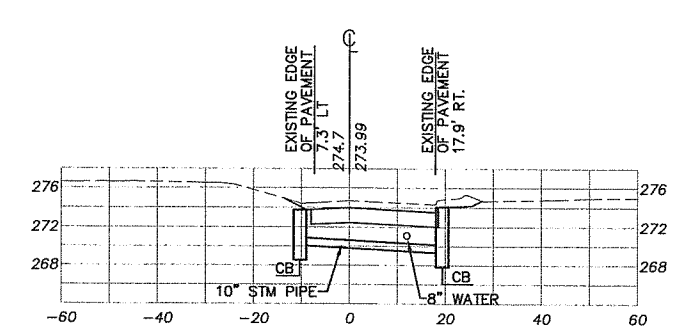

9+57.75
(81st AVE)

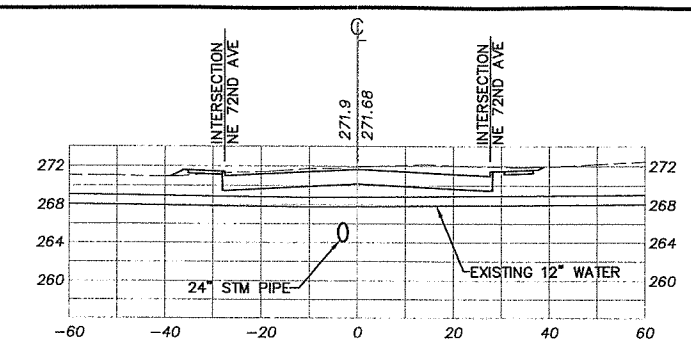

36+57
(63rd ST)

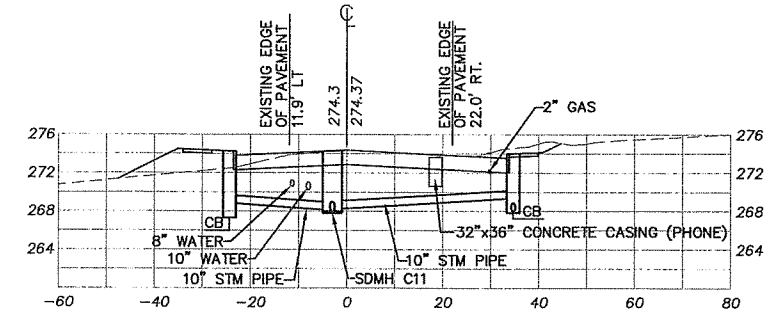

60+12
(63rd ST)

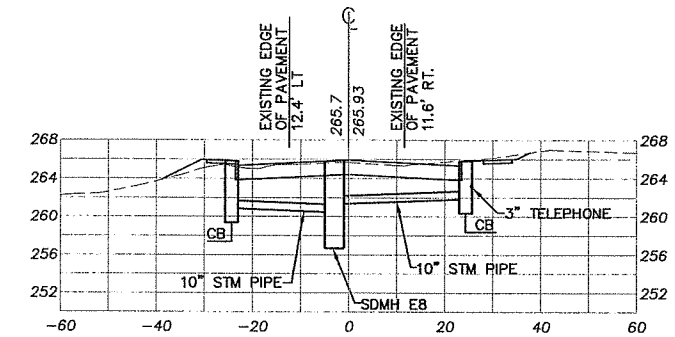

75+50
(63rd ST)

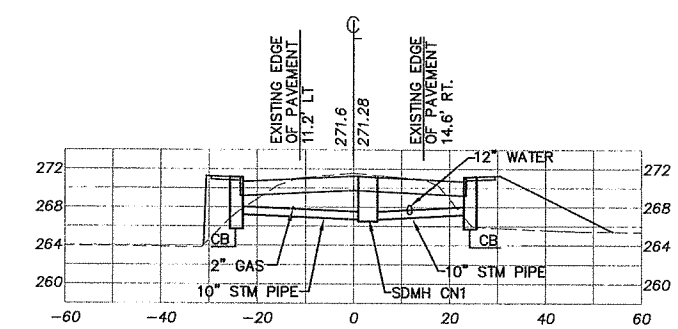

23+86.26
(72nd AVE)

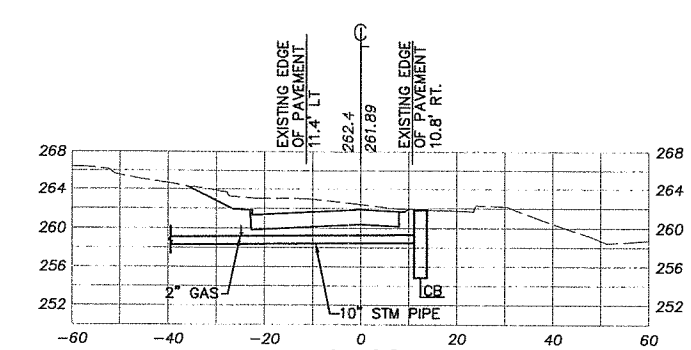

9+62
(87th AVE)

NOT FOR CONSTRUCTION

DESIGN & ENGINEERING DIVISION
NE 63RD STREET IMPROVEMENTS

POTHOLE DATA CROSS SECTIONS

proud past, promising future
CLARK COUNTY WASHINGTON

DESIGNED:	PKW
DRAWN:	GME
CRP:	330422
HORIZ.	1" = 20'
VERT.	1" = 10'
DATE:	5/28/2004
DWG:	PH01
SHEET	4 OF 63

CALL 48 HOURS BEFORE YOU DIG
1-800-424-5555
"It's the Law"
NORTHWEST UTILITIES NOTIFICATION CENTER

PAUL A. EDEMANN
STATE OF WASHINGTON
22440
REGISTERED PROFESSIONAL ENGINEER
EXPIRES AUG. 31, 2005

otak Incorporated
700 Washington St., Suite 401
Vancouver, WA. 98660
Phone: (360) 737-8069
FAX: (360) 737-9651

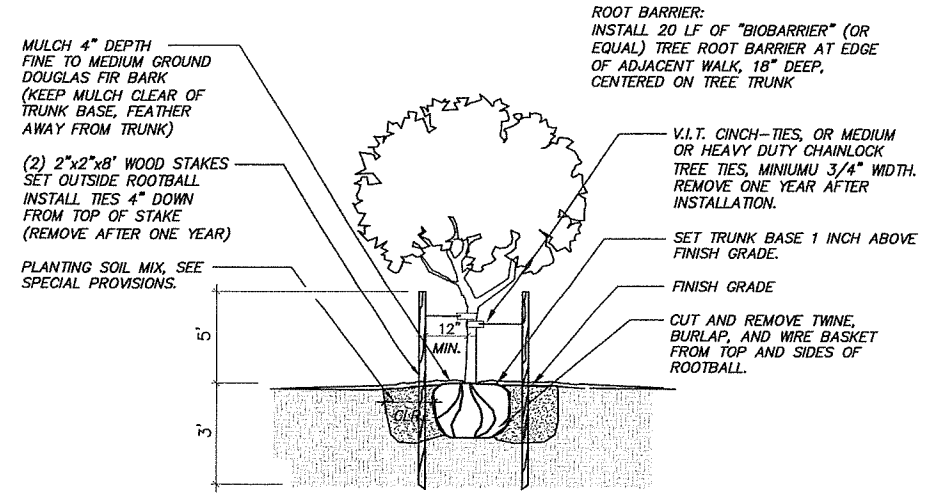

TREE STAKING DETAIL

(NOT TO SCALE)

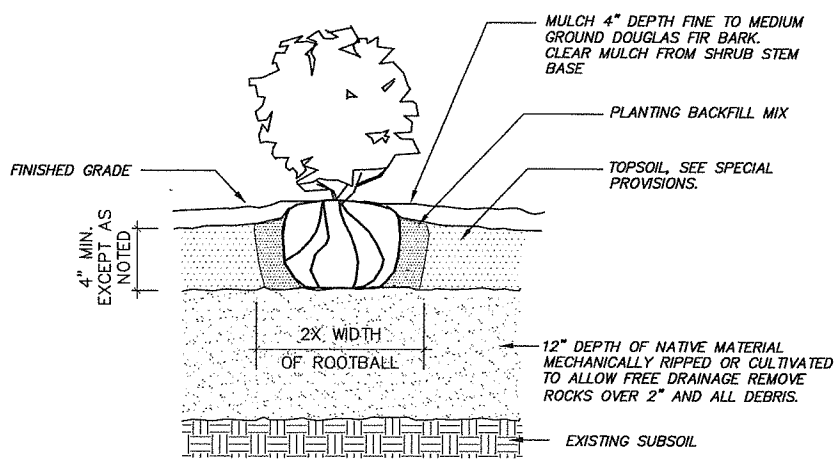

SHRUB & GROUND COVER PLANTING DETAIL

(NOT TO SCALE)

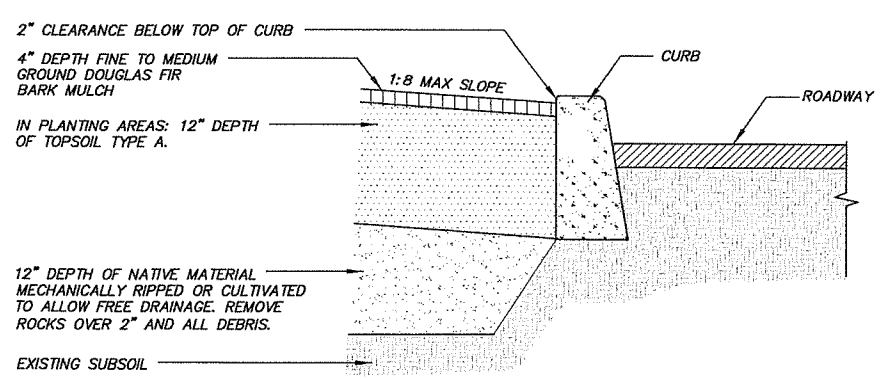

PLANTING AREA SECTION AT CURB

(NOT TO SCALE)

PLANT MATERIAL LEGEND

SYMBOL	QTY (TOTAL ALL SHTS)	COMMON NAME	BOTANICAL NAME	SPACING	SIZE AND DESCRIPTION
TREES					
	123	CORINTHIAN LINDEN	TILIA CORDATA 'CORZAM'	40' O.C. OR AS SHOWN	2" CALIPER
	xx	AMERICAN HORNBEAM	CARPINUS CAROLINIANA	30' O.C. OR AS SHOWN	1.5" CALIPER
SHRUBS / GROUND COVERS					
	xx	WARMINSTER BROOM	CYTISUS PRAECOX	48 IN. O.C.	2 GALLON
	xx	ORCHID ROCKROSE	CISTUS PURPUREOUS	48 IN. O.C.	2 GALLON
	xx	SUNROSE	HELIANTHEMUM NUMMULARIUM	30 IN. O.C. 2 STAGGERED ROWS	1 GALLON
	xx	KINNIKINNICK	ARCOSTAPHYLOS UVA-URSI 'MASSACHUSETTS'	30 IN. O.C.	1 GALLON

PLANTING NOTES

1. TREES IN PLANTING STRIPS TO BE CENTERED IN PLANTER WITH SPACING SHOWN ON PLAN.

2. INSTALL STREET TREES PER TREE STAKING DETAIL. OPTIONAL PERFORATED PIPE FOR MANUAL IRRIGATION IS NOT REQUIRED AS PART OF THIS WORK.

3. LEAVE PLANT NAME IDENTIFICATION TAGS ON TEN PERCENT OF ALL TREES AND SHRUBS INSTALLED TO AID COUNTY INSPECTORS IN VERIFYING THAT SPECIFIED PLANTS HAVE BEEN INSTALLED.

4. PLANT CENTER OF SHRUBS A MINIMUM OF 24 INCHES FROM STREET CURBS. PLANT CENTER OF GROUND COVERS A MINIMUM OF 18" FROM STREET CURBS.

5. INSTALL 4-INCH MIN. DEPTH OF MEDIUM FIR BARK MULCH LAYER OVER ALL PLANTING AREAS AFTER INSTALLATION OF TREES, SHRUBS, AND GROUND COVERS.

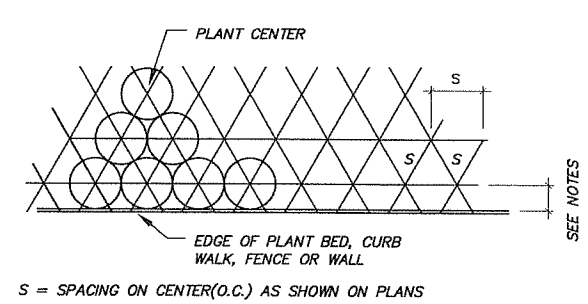

TRIANGULAR PLANT SPACING

(NOT TO SCALE)

NOT FOR CONSTRUCTION

DESIGN & ENGINEERING DIVISION
NE 63RD STREET IMPROVEMENTS

LANDSCAPE DETAILS AND NOTES

DESIGNED: SLW
DRAWN: SLN
CRP: 330422
HORIZ: NA
VERT: NA
DATE: 5/28/2004
DWG: L01
SHEET 48 OF 63

CALL 48 HOURS BEFORE YOU DIG 1-800-424-5555 "It's the Law" NORTHWEST UTILITIES NOTIFICATION CENTER

STATE OF WASHINGTON REGISTERED LANDSCAPE ARCHITECT
DAVID D. HAYNES CERTIFICATE NO. 824

otak Incorporated
700 Washington St. Suite 401
Vancouver, WA 98660
Phone: (360) 737-8593
FAX: (360) 737-9851

proud past, promising future
CLARK COUNTY WASHINGTON

V: SHERYL 05/28/04 7:36am ---> V:\PROJECT\11900\11944\DWG\C9445048.DWG

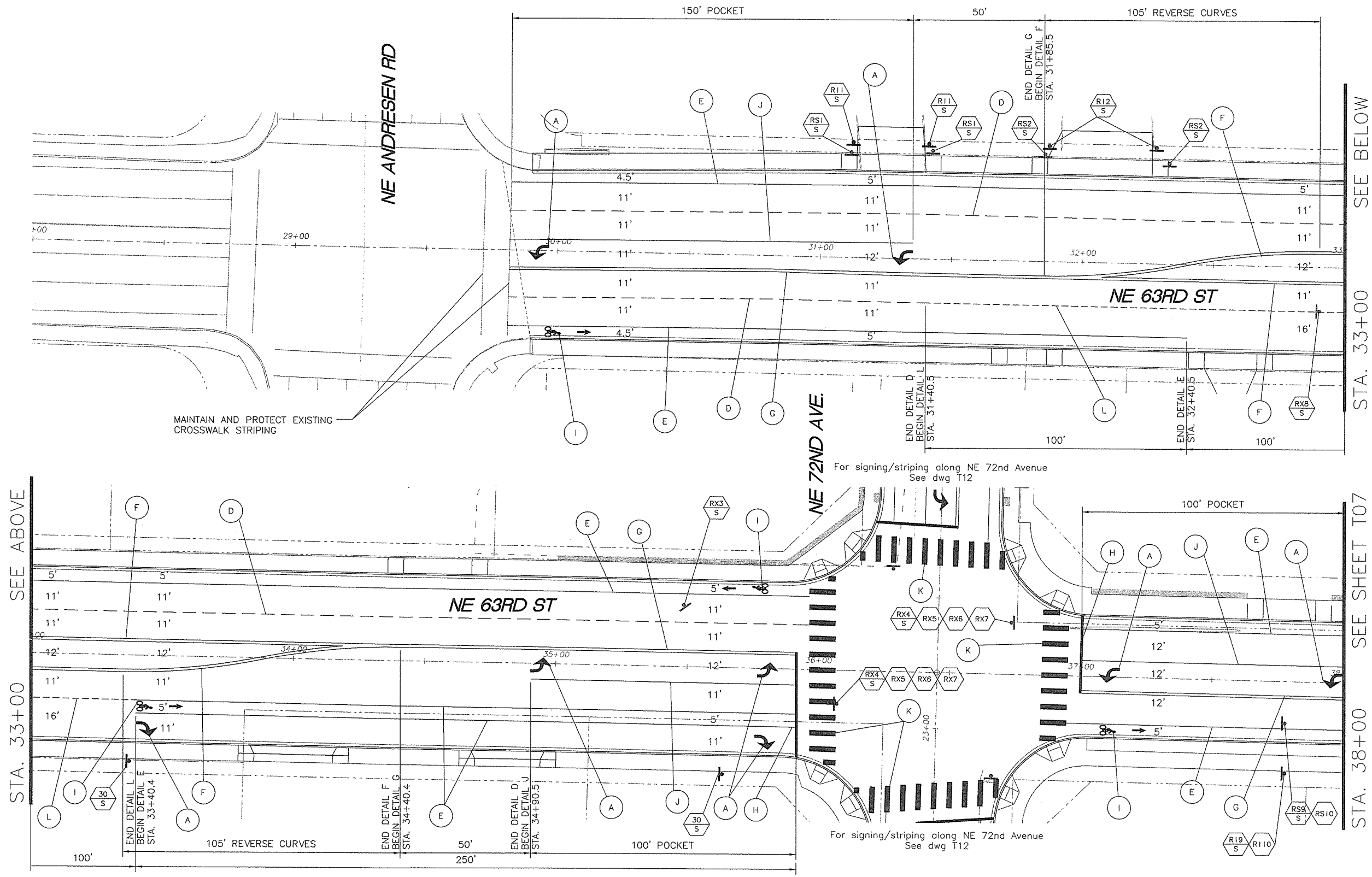

GENERAL NOTES

1. All signing and pavement markings shall conform to the requirements and specifications of the Manual on Uniform Traffic Control Devices (MUTCD), latest edition, and the 2004 WSDOT Standard Specifications for Road, Bridge and Municipal Construction.
2. Dimensions are approximate. All traffic sign positions and pavement markings shall be approved in the field by the engineer prior to installation. For restripe conditions, if dimensions for existing striping vary from those shown on plans, contractor will provide engineer the existing dimensions and gain engineer approval prior to restriping.
3. The County's accepted practice of removal of existing painted pavement markings is by shot blasting. All other markings are removed by grinding. The contractor shall have a written approval by the engineer for any other method of removal.
4. All materials and workmanship shall conform to the 2004 WSDOT Standard Specifications for Road, Bridge and Municipal Construction.
5. Crosswalks, stop bars, and arrows shall be thermoplastic.
6. Refer to signing, striping and pavement marking details on dwgs T13 to T15.
7. Contractor to coordinate with C-Tran two weeks in advance for bus stop sign removal/installation.
8. The contractor shall maintain existing permanent signing in accordance with 2004 WSDOT Standard Specifications for Road, Bridge and Municipal Construction Section 1-07.23(1).

SHEET LEGEND

- (X) Striping detail, see dwg T13 for details.
- (N/M) Install new sign (N) on new sign support (M).
- (RSN/M) Remove and save existing sign (N) and sign support (M).
- (RXN/M) Remove and salvage existing sign (N) and sign support (M).
- (RIN/M) Reinstall existing sign (N) on new/existing sign support (M). See sign schedule for details.
- (EXN) Retain and protect existing sign (N) and support.
- New sign on new steel breakaway sign post.
- Existing sign on existing support.

M = Material: (W) = Wood
(S) = Steel
(LP) = Light Pole

PERMANENT STRIPING NOT IN CONTRACT
Work to be performed by County Forces

20' 10' 0' 20' 40'
SCALE: 1" = 20'

90% SUBMITTAL
NOT FOR CONSTRUCTION

DESIGN & ENGINEERING DIVISION
NE 63RD STREET IMPROVEMENTS

NE 63RD STREET
SIGNING/STRIPING PLAN

CLARK COUNTY WASHINGTON
proud past, promising future

DKS Associates
TRANSPORTATION SOLUTIONS
1400 SW Fifth Avenue, Suite 501
Portland, Oregon 97201-5535
Telephone (503) 243-3500
Fax (503) 243-1934

PAUL F. FOLEY
STATE OF WASHINGTON
27235
REGISTERED PROFESSIONAL ENGINEER
EXPIRES JAN 20, 2005

CALL 48 HOURS BEFORE YOU DIG
1-800-424-5555
"It's the Law"
NORTHWEST UTILITIES NOTIFICATION CENTER

DESIGNED:	CTS
DRAWN:	JCLD
CRP:	330422
HORIZ.	
VERT.	
DATE:	05/28/2004
DWG:	T06
SHEET	54 OF 63

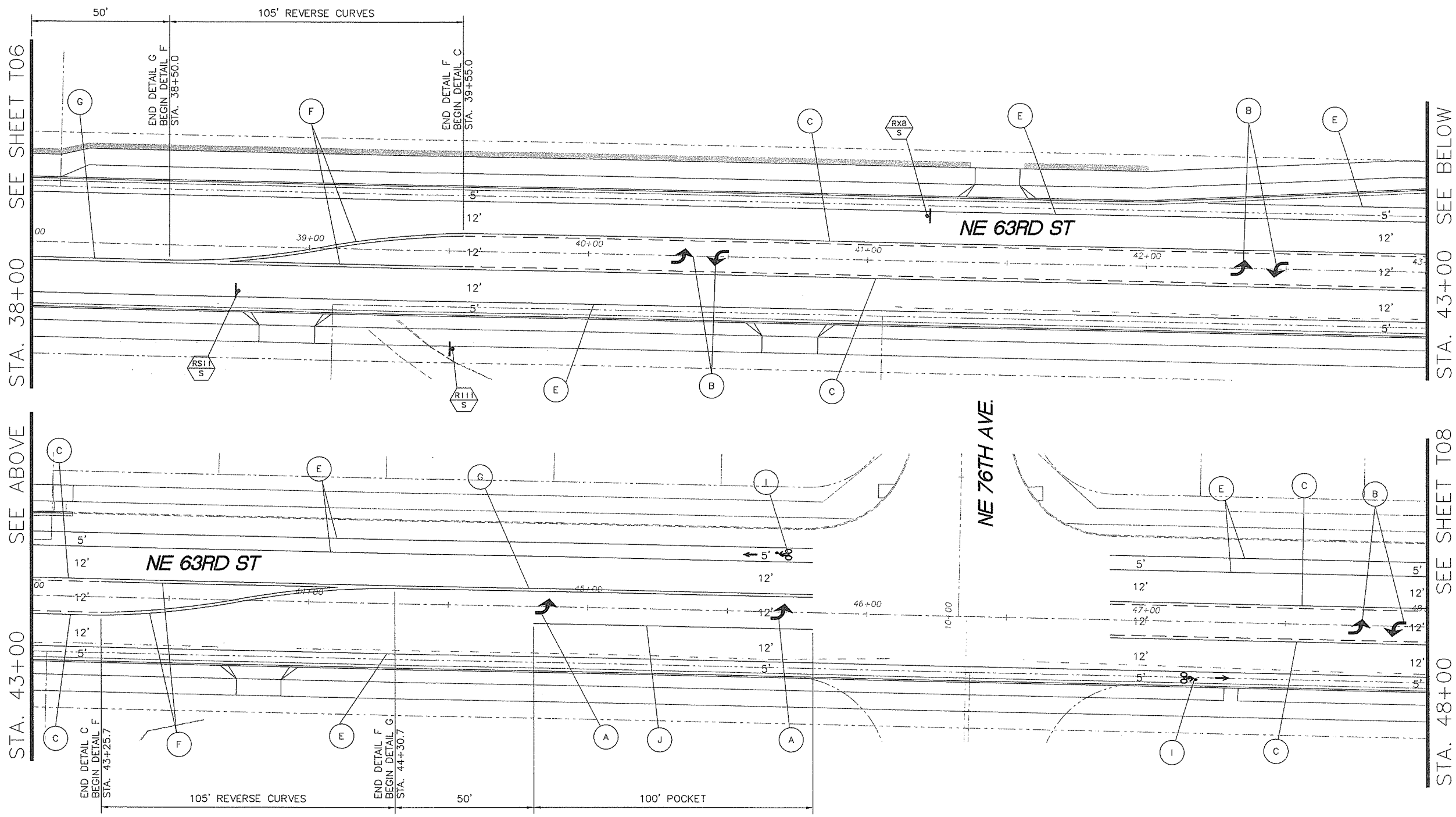

GENERAL NOTES

1. All signing and pavement markings shall conform to the requirements and specifications of the Manual on Uniform Traffic Control Devices (MUTCD), latest edition, and the 2004 WSDOT Standard Specifications for Road, Bridge and Municipal Construction.
2. Dimensions are approximate. All traffic sign positions and pavement markings shall be approved in the field by the engineer prior to installation. For restripe conditions, if dimensions for existing striping vary from those shown on plans, contractor will provide engineer the existing dimensions and gain engineer approval prior to restriping.
3. The County's accepted practice of removal of existing painted pavement markings is by shot blasting. All other markings are removed by grinding. The contractor shall have a written approval by the engineer for any other method of removal.
4. All materials and workmanship shall conform to the 2004 WSDOT Standard Specifications for Road, Bridge and Municipal Construction.
5. Crosswalks, stop bars, and arrows shall be thermoplastic.
6. Refer to signing, striping and pavement marking details on dwgs T13 to T15.
7. Contractor to coordinate with C–Tran two weeks in advance for bus stop sign removal/installation.
8. The contractor shall maintain existing permanent signing in accordance with 2004 WSDOT Standard Specifications for Road, Bridge and Municipal Construction Section 1–07.23(1).

SHEET LEGEND

- (X) Striping detail, see dwg T13 for details.
- (N/M) Install new sign (N) on new sign support (M).
- (RSN/M) Remove and save existing sign (N) and sign support (M).
- (RXN/M) Remove and salvage existing sign (N) and sign support (M).
- (RIN/M) Reinstall existing sign (N) on new/existing sign support (M). See sign schedule for details.
- (EXN) Retain and protect existing sign (N) and support.
- New sign on new steel breakaway sign post.
- Existing sign on existing support.

M = Material: (W) = Wood
(S) = Steel
(LP) = Light Pole

PERMANENT STRIPING NOT IN CONTRACT
Work to be performed by County Forces

20' 10' 0' 20' 40'
SCALE: 1" = 20'

90% SUBMITTAL
NOT FOR CONSTRUCTION

DESIGNED:	CTS
DRAWN:	JCLD
CRP:	330422
HORIZ.	
VERT.	
DATE:	05/28/2004
DWG:	T07
SHEET	55 OF 63

CALL 48 HOURS BEFORE YOU DIG
1-800-424-5555
"It's the Law"
NORTHWEST UTILITIES NOTIFICATION CENTER

PAUL L. COREY
STATE OF WASHINGTON
21735
REGISTERED PROFESSIONAL ENGINEER
EXPIRES: JAN. 30, 2005

DKS Associates
TRANSPORTATION SOLUTIONS
1400 SW Fifth Ave, Suite 900
Portland, Oregon 97201-5702
Telephone (503) 243-3500
Fax (503) 243-1934

DESIGN & ENGINEERING DIVISION
NE 63RD STREET IMPROVEMENTS

NE 63RD STREET
SIGNING/STRIPING PLAN

proud past, promising future
CLARK COUNTY
WASHINGTON

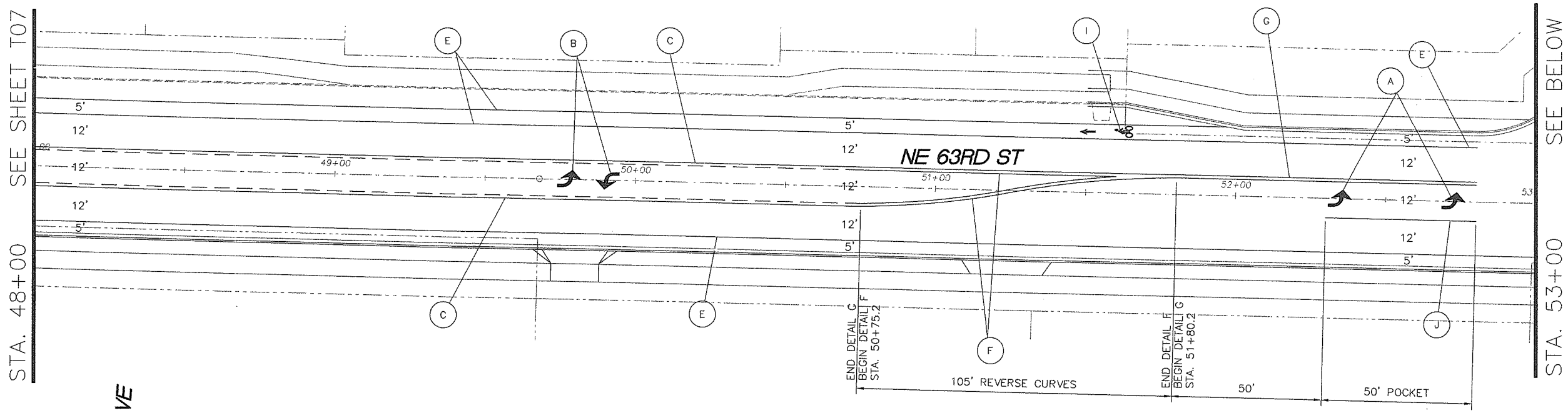

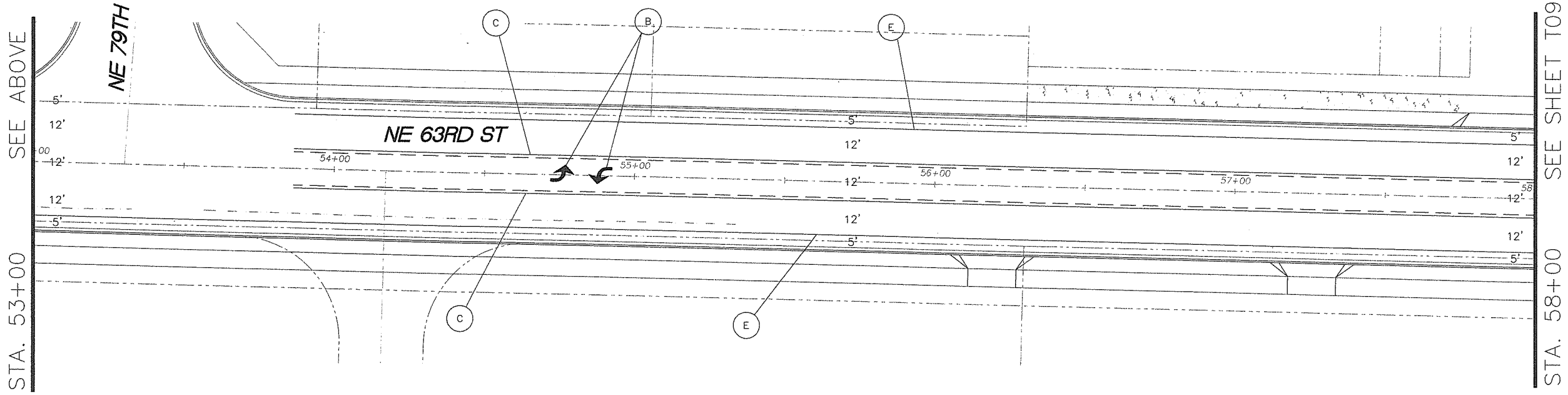

GENERAL NOTES

1. All signing and pavement markings shall conform to the requirements and specifications of the Manual on Uniform Traffic Control Devices (MUTCD), latest edition, and the 2004 WSDOT Standard Specifications for Road, Bridge and Municipal Construction.
2. Dimensions are approximate. All traffic sign positions and pavement markings shall be approved in the field by the engineer prior to installation. For restripe conditions, if dimensions for existing striping vary from those shown on plans, contractor will provide engineer the existing dimensions and gain engineer approval prior to restriping.
3. The County's accepted practice of removal of existing painted pavement markings is by shot blasting. All other markings are removed by grinding. The contractor shall have a written approval by the engineer for any other method of removal.
4. All materials and workmanship shall conform to the 2004 WSDOT Standard Specifications for Road, Bridge and Municipal Construction.
5. Crosswalks, stop bars, and arrows shall be thermoplastic.
6. Refer to signing, striping and pavement marking details on dwgs T13 to T15.
7. Contractor to coordinate with C-Tran two weeks in advance for bus stop sign removal/installation.
8. The contractor shall maintain existing permanent signing in accordance with 2004 WSDOT Standard Specifications for Road, Bridge and Municipal Construction Section 1-07.23(1).

SHEET LEGEND

- (X) Striping detail, see dwg T13 for details.
- (N/M) Install new sign (N) on new sign support (M).
- (RSN/M) Remove and save existing sign (N) and sign support (M).
- (RXN/M) Remove and salvage existing sign (N) and sign support (M).
- (RIN/M) Reinstall existing sign (N) on new/existing sign support (M). See sign schedule for details.
- (EXN) Retain and protect existing sign (N) and support.
- New sign on new steel breakaway sign post.
- Existing sign on existing support.

M = Material: (W) = Wood
(S) = Steel
(LP) = Light Pole

PERMANENT STRIPING NOT IN CONTRACT
Work to be performed by County Forces

20' 10' 0' 20' 40'
SCALE: 1" = 20'

90% SUBMITTAL
NOT FOR CONSTRUCTION

DESIGNED: CTS
DRAWN: JCLD
CRP: 330422
HORIZ.
VERT.
DATE: 05/28/2004
DWG: T08
SHEET 56 OF 63

CALL 48 HOURS BEFORE YOU DIG
1-800-424-5555
"It's the Law"
NORTHWEST UTILITIES NOTIFICATION CENTER

PRELIMINARY
STATE OF WASHINGTON
JAMES C. TOMPKINS
PROFESSIONAL ENGINEER
EXPIRES JAN. 30, 2005

DKS Associates
TRANSPORTATION SOLUTIONS
1400 SW 5th Avenue, Suite 900
Portland, Oregon 97201-5622
Telephone (503) 243-3500
Fax (503) 243-1934

DESIGN & ENGINEERING DIVISION
NE 63RD STREET IMPROVEMENTS

NE 63RD STREET
SIGNING/STRIPING PLAN

proud past, promising future
CLARK COUNTY
WASHINGTON

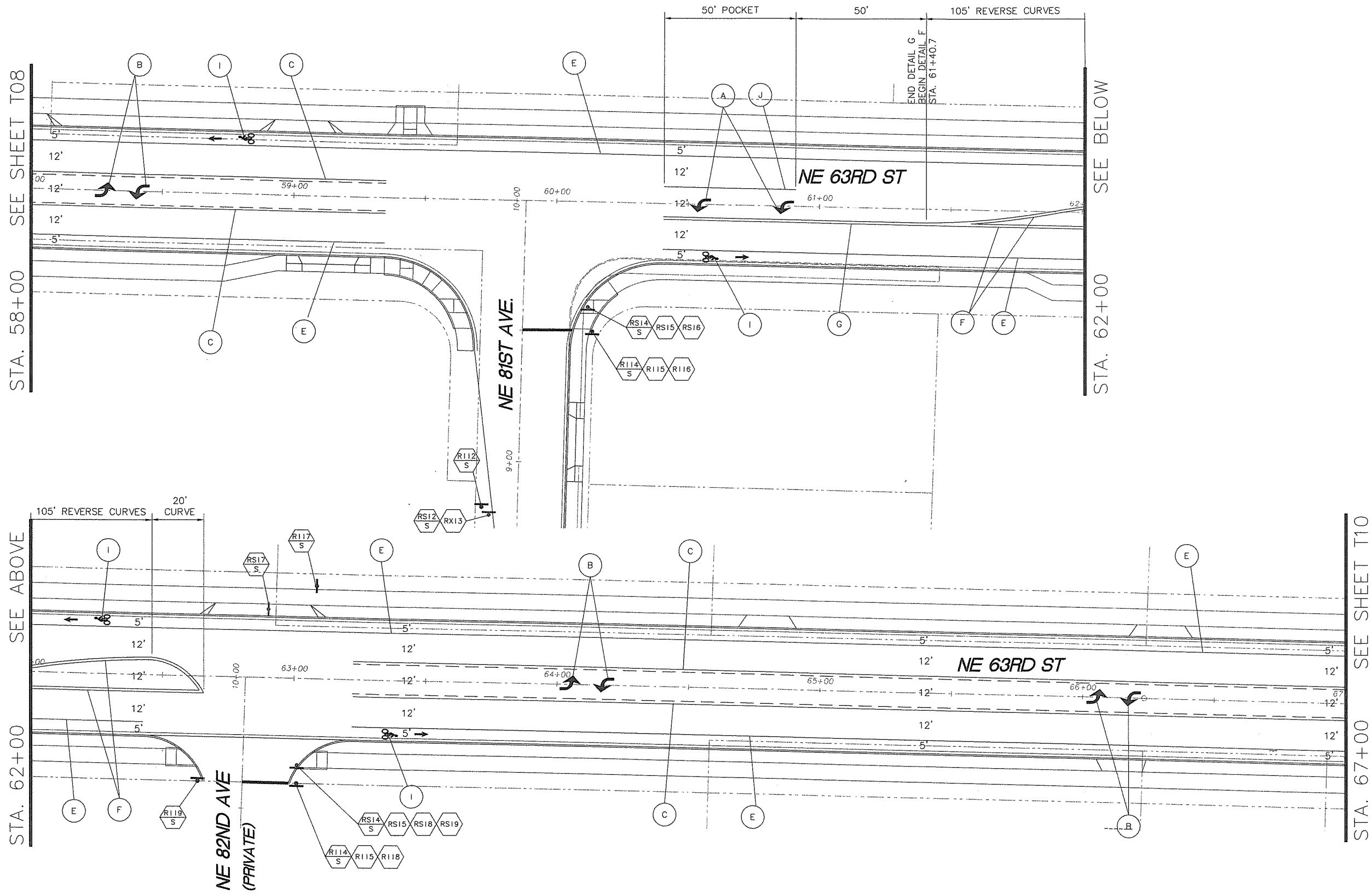

GENERAL NOTES

1. All signing and pavement markings shall conform to the requirements and specifications of the Manual on Uniform Traffic Control Devices (MUTCD), latest edition, and the 2004 WSDOT Standard Specifications for Road, Bridge and Municipal Construction.
2. Dimensions are approximate. All traffic sign positions and pavement markings shall be approved in the field by the engineer prior to installation. For restripe conditions, if dimensions for existing striping vary from those shown on plans, contractor will provide engineer the existing dimensions and gain engineer approval prior to restriping.
3. The County's accepted practice of removal of existing painted pavement markings is by shot blasting. All other markings are removed by grinding. The contractor shall have a written approval by the engineer for any other method of removal.
4. All materials and workmanship shall conform to the 2004 WSDOT Standard Specifications for Road, Bridge and Municipal Construction.
5. Crosswalks, stop bars, and arrows shall be thermoplastic.
6. Refer to signing, striping and pavement marking details on dwgs T13 to T15.
7. Contractor to coordinate with C-Tran two weeks in advance for bus stop sign removal/installation.
8. The contractor shall maintain existing permanent signing in accordance with 2004 WSDOT Standard Specifications for Road, Bridge and Municipal Construction Section 1-07.23(1).

SHEET LEGEND

- (X) Striping detail, see dwg T13 for details.
- (N / M) Install new sign (N) on new sign support (M).
- (RSN / M) Remove and save existing sign (N) and sign support (M).
- (RXN / M) Remove and salvage existing sign (N) and sign support (M).
- (RIN / M) Reinstall existing sign (N) on new/existing sign support (M). See sign schedule for details.
- (EXN) Retain and protect existing sign (N) and support.
- New sign on new steel breakaway sign post.
- Existing sign on existing support.

M = Material: (W) = Wood
(S) = Steel
(LP) = Light Pole

PERMANENT STRIPING NOT IN CONTRACT
Work to be performed by County Forces

20' 10' 0' 20' 40'
SCALE: 1" = 20'

90% SUBMITTAL
NOT FOR CONSTRUCTION

DESIGNED: CTS
DRAWN: JCLD
CRP: 330422
HORIZ.
VERT.
DATE: 05/28/2004
DWG: T09
SHEET 57 OF 63

CALL 48 HOURS BEFORE YOU DIG
1-800-424-5555
"It's the Law"
NORTHWEST UTILITIES NOTIFICATION CENTER

PROFESSIONAL ENGINEER
STATE OF WASHINGTON
27235
PAUL R. SCHMIDT
EXPIRES JAN. 16, 2005

DKS Associates
TRANSPORTATION SOLUTIONS
1400 SW Fifth Avenue, Suite 500 Portland, Oregon 97201-5522
Telephone (503) 243-3500
Fax (503) 243-1934

DESIGN & ENGINEERING DIVISION
NE 63RD STREET IMPROVEMENTS

NE 63RD STREET
SIGNING/STRIPING PLAN

proud past, promising future
CLARK COUNTY
WASHINGTON

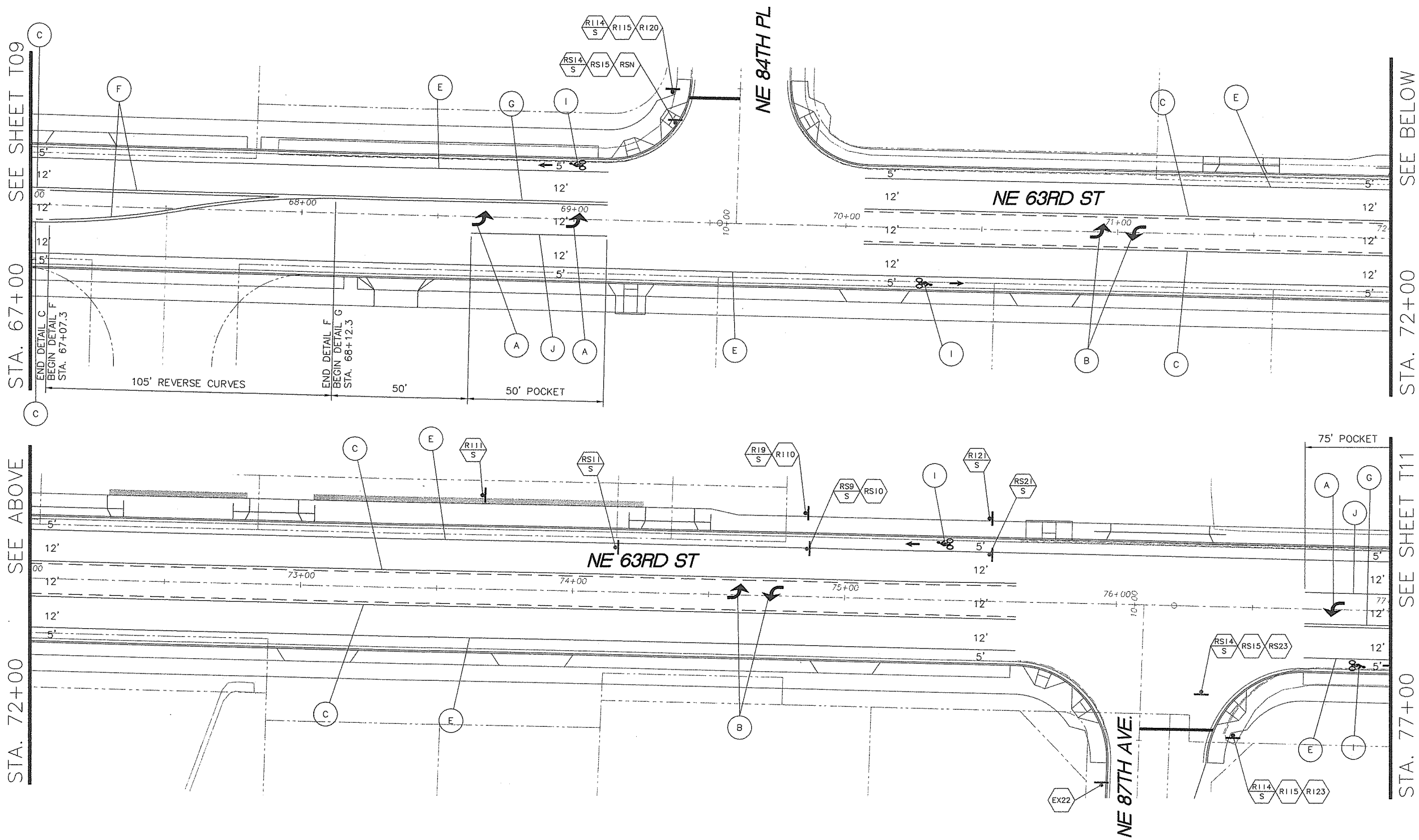

GENERAL NOTES

1. All signing and pavement markings shall conform to the requirements and specifications of the Manual on Uniform Traffic Control Devices (MUTCD), latest edition, and the 2004 WSDOT Standard Specifications for Road, Bridge and Municipal Construction.
2. Dimensions are approximate. All traffic sign positions and pavement markings shall be approved in the field by the engineer prior to installation. For restripe conditions, if dimensions for existing striping vary from those shown on plans, contractor will provide engineer the existing dimensions and gain engineer approval prior to restriping.
3. The County's accepted practice of removal of existing painted pavement markings is by shot blasting. All other markings are removed by grinding. The contractor shall have a written approval by the engineer for any other method of removal.
4. All materials and workmanship shall conform to the 2004 WSDOT Standard Specifications for Road, Bridge and Municipal Construction.
5. Crosswalks, stop bars, and arrows shall be thermoplastic.
6. Refer to signing, striping and pavement marking details on dwgs T13 to T15.
7. Contractor to coordinate with C-Tran two weeks in advance for bus stop sign removal/installation.
8. The contractor shall maintain existing permanent signing in accordance with 2004 WSDOT Standard Specifications for Road, Bridge and Municipal Construction Section 1-07.23(1).

SHEET LEGEND

- (X) Striping detail, see dwg T13 for details.
- (N/M) Install new sign (N) on new sign support (M).
- (RSN/M) Remove and save existing sign (N) and sign support (M).
- (RXN/M) Remove and salvage existing sign (N) and sign support (M).
- (RIN/M) Reinstall existing sign (N) on new/existing sign support (M). See sign schedule for details.
- (EXN) Retain and protect existing sign (N) and support.
- New sign on new steel breakaway sign post.
- Existing sign on existing support.

M = Material: (W) = Wood
(S) = Steel
(LP) = Light Pole

PERMANENT STRIPING NOT IN CONTRACT
Work to be performed by County Forces

SCALE: 1" = 20'

90% SUBMITTAL
NOT FOR CONSTRUCTION

DESIGNED:	CTS
DRAWN:	JCLD
CRP:	330422
HORIZ.	
VERT.	
DATE:	05/28/2004
DWG:	T10
SHEET	58 OF 63

CALL 48 HOURS BEFORE YOU DIG
1-800-424-5555
"It's the Law"
NORTHWEST UTILITIES NOTIFICATION CENTER

PROFESSIONAL ENGINEER
STATE OF WASHINGTON
RICHARD J. SAYLOR
EXPIRES: JAN. 30, 2005

DKS Associates
TRANSPORTATION SOLUTIONS

DESIGN & ENGINEERING DIVISION
NE 63RD STREET IMPROVEMENTS

NE 63RD STREET
SIGNING/STRIPING PLAN

proud past, promising future
CLARK COUNTY
WASHINGTON

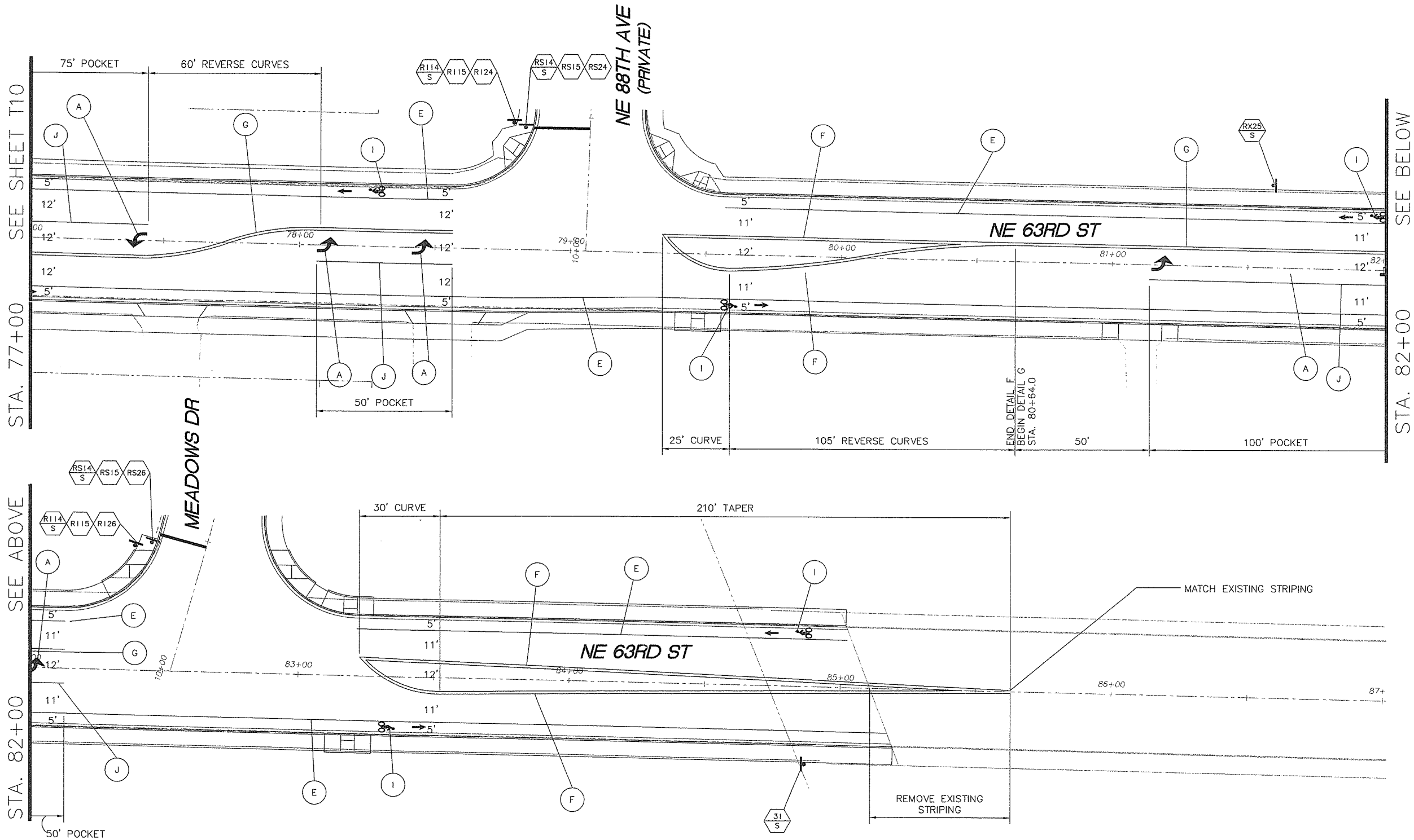

GENERAL NOTES

1. All signing and pavement markings shall conform to the requirements and specifications of the Manual on Uniform Traffic Control Devices (MUTCD), latest edition, and the 2004 WSDOT Standard Specifications for Road, Bridge and Municipal Construction.
2. Dimensions are approximate. All traffic sign positions and pavement markings shall be approved in the field by the engineer prior to installation. For restripe conditions, if dimensions for existing striping vary from those shown on plans, contractor will provide engineer the existing dimensions and gain engineer approval prior to restriping.
3. The County's accepted practice of removal of existing painted pavement markings is by shot blasting. All other markings are removed by grinding. The contractor shall have a written approval by the engineer for any other method of removal.
4. All materials and workmanship shall conform to the 2004 WSDOT Standard Specifications for Road, Bridge and Municipal Construction.
5. Crosswalks, stop bars, and arrows shall be thermoplastic.
6. Refer to signing, striping and pavement marking details on dwgs T13 to T15.
7. Contractor to coordinate with C-Tran two weeks in advance for bus stop sign removal/installation.
8. The contractor shall maintain existing permanent signing in accordance with 2004 WSDOT Standard Specifications for Road, Bridge and Municipal Construction Section 1-07.23(1).

SHEET LEGEND

- (X) Striping detail, see dwg T13 for details.
- (N / M) Install new sign (N) on new sign support (M).
- (RSN / M) Remove and save existing sign (N) and sign support (M).
- (RXN / M) Remove and salvage existing sign (N) and sign support (M).
- (RIN / M) Reinstall existing sign (N) on new/existing sign support (M). See sign schedule for details.
- (EXN) Retain and protect existing sign (N) and support.
- New sign on new steel breakaway sign post.
- Existing sign on existing support.
- M = Material: (W) = Wood, (S) = Steel, (LP) = Light Pole

PERMANENT STRIPING NOT IN CONTRACT
Work to be performed by County Forces

20' 10' 0' 20' 40'
SCALE: 1" = 20'

90% SUBMITTAL
NOT FOR CONSTRUCTION

DESIGNED: CTS
DRAWN: JCLD
CRP: 330422
HORIZ.
VERT.
DATE: 05/28/2004
DWG: T11
SHEET 59 OF 63

CALL 48 HOURS BEFORE YOU DIG
1-800-424-5555
"It's the Law"
NORTHWEST UTILITIES NOTIFICATION CENTER

PETER L. COFFEY
STATE OF WASHINGTON
27236
PROFESSIONAL ENGINEER
EXPIRES JAN. 30, 2005

DKS Associates
TRANSPORTATION SOLUTIONS
1400 SW Fifth Avenue, Suite 500 Portland, Oregon 97201-5622
Telephone: (503) 243-3500
Fax: (503) 243-1934

DESIGN & ENGINEERING DIVISION
NE 63RD STREET IMPROVEMENTS

NE 63RD STREET
SIGNING/STRIPING PLAN

CLARK COUNTY WASHINGTON
proud past. promising future

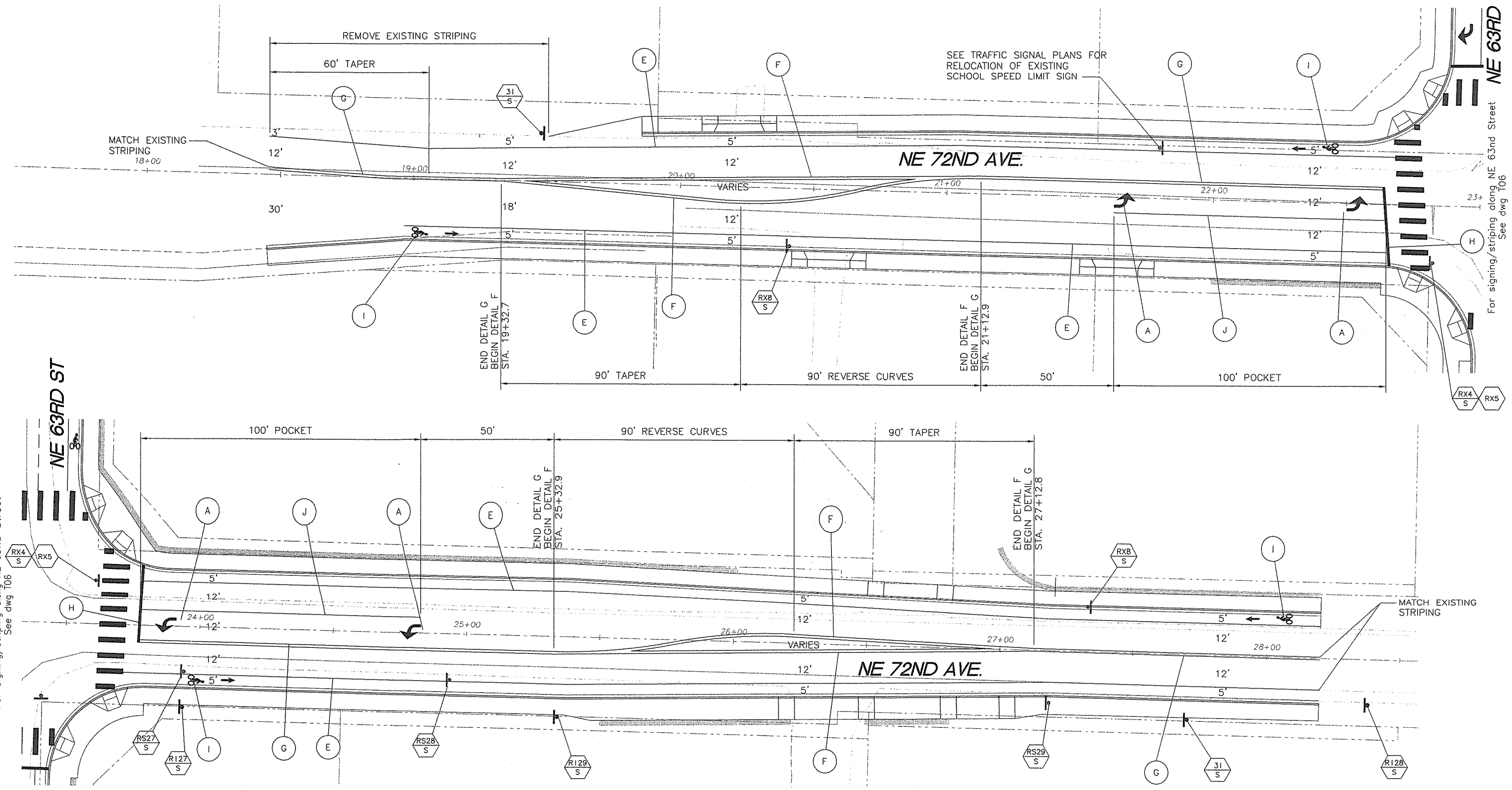

GENERAL NOTES

1. All signing and pavement markings shall conform to the requirements and specifications of the Manual on Uniform Traffic Control Devices (MUTCD), latest edition, and the 2004 WSDOT Standard Specifications for Road, Bridge and Municipal Construction.
2. Dimensions are approximate. All traffic sign positions and pavement markings shall be approved in the field by the engineer prior to installation. For restripe conditions, if dimensions for existing striping vary from those shown on plans, contractor will provide engineer the existing dimensions and gain engineer approval prior to restriping.
3. The County's accepted practice of removal of existing painted pavement markings is by shot blasting. All other markings are removed by grinding. The contractor shall have a written approval by the engineer for any other method of removal.
4. All materials and workmanship shall conform to the 2004 WSDOT Standard Specifications for Road, Bridge and Municipal Construction.
5. Crosswalks, stop bars, and arrows shall be thermoplastic.
6. Refer to signing, striping and pavement marking details on dwgs T13 to T15.
7. Contractor to coordinate with C-Tran two weeks in advance for bus stop sign removal/installation.
8. The contractor shall maintain existing permanent signing in accordance with 2004 WSDOT Standard Specifications for Road, Bridge and Municipal Construction Section 1-07.23(1).

SHEET LEGEND

- (X) Striping detail, see dwg T13 for details.
- (N/M) Install new sign (N) on new sign support (M).
- (RSN/M) Remove and save existing sign (N) and sign support (M).
- (RXN/M) Remove and salvage existing sign (N) and sign support (M).
- (RIN/M) Reinstall existing sign (N) on new/existing sign support (M). See sign schedule for details.
- (EXN) Retain and protect existing sign (N) and support.
- New sign on new steel breakaway sign post.
- Existing sign on existing support.
- M = Material: (W) = Wood, (S) = Steel, (LP) = Light Pole

PERMANENT STRIPING NOT IN CONTRACT
Work to be performed by County Forces

20' 10' 0' 20' 40'
SCALE: 1" = 20'

90% SUBMITTAL
NOT FOR CONSTRUCTION

DESIGNED: CTS
DRAWN: JCLD
CRP: 330422
HORIZ.
VERT.
DATE: 05/28/2004
DWG: T12
SHEET 60 OF 63

CALL 48 HOURS BEFORE YOU DIG 1-800-424-5555 "It's the Law" NORTHWEST UTILITIES NOTIFICATION CENTER

PRELIMINARY — EXPIRES: JAN. 30, 2005

DKS Associates TRANSPORTATION SOLUTIONS

DESIGN & ENGINEERING DIVISION
NE 63RD STREET IMPROVEMENTS

NE 72ND AVENUE
SIGNING/STRIPING PLAN

proud past, promising future
CLARK COUNTY WASHINGTON

STRIPING LEGEND

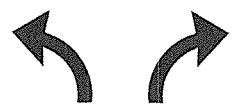

ARROWS SHALL BE TYPE 2L OR 2R (SEE WSDOT STANDARD PLAN H-5c). ARROWS SHALL BE THERMOPLASTIC PAVEMENT MARKING MATERIAL.

PAVEMENT ARROW MARKINGS (A)
NTS

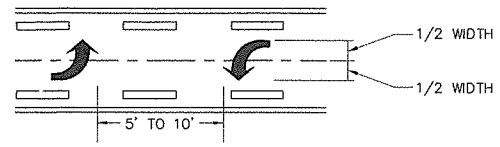

ARROWS SHALL BE TYPE 2L (SEE WSDOT STANDARD PLAN H-5c). ARROWS SHALL BE THERMOPLASTIC PAVEMENT MARKING MATERIAL, CENTERED IN TURN LANE.

TWO WAY LEFT TURN ARROWS (B)
NTS

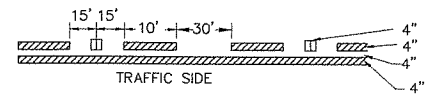

4" YELLOW LINES (PAINT) WITH TYPE 2YY RPMS AT 80' O.C. OUTSIDE LINE IS SOLID.

TWO WAY LEFT TURN STRIPE (C)
NTS

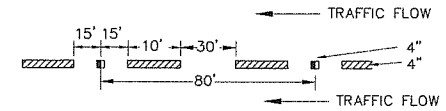

4" WHITE LINE (PAINT) WITH TYPE 2W RPM'S PLACED AT 80' INTERVALS ON TANGENTS AND 40' INTERVALS ON HORIZONTAL CURVES.

LANE LINE (D)
NTS

8" WHITE LINE (PAINT).

BIKE LANE STRIPE (E)
NTS

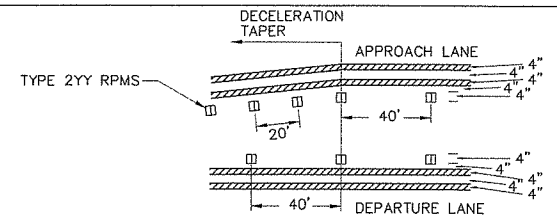

DOUBLE YELLOW CENTER STRIPE (F)
NTS

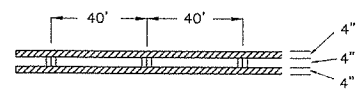

TWO 4"YELLOW LINES (PAINT) WITH 2YY RPMS AT 40' O.C.

ALTERNATE DOUBLE YELLOW CENTER (G)
NTS

STOPBAR SHALL BE THERMOPLASTIC PAVEMENT MARKING MATERIAL. PLACE STOPBAR 4' FROM EDGE OF LADDER CROSSWALK WHEN APPLICABLE.

STOPBAR (H)
NTS

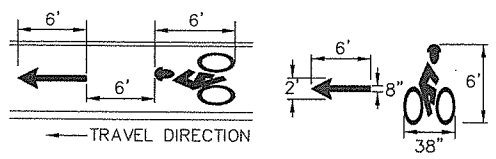

BIKE LANE SYMBOL SHALL BE WHITE THERMOPLASTIC PAVEMENT MARKING MATERIAL

BIKE LANE SYMBOL (I)
NTS

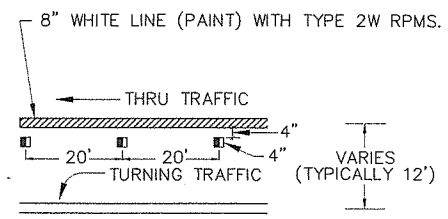

GORE STRIPE (J)
NTS

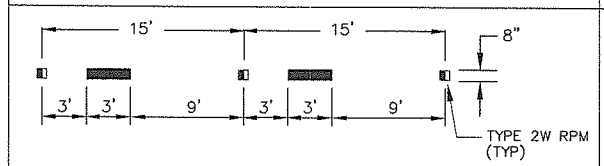

8" WHITE LINE (PAINT) WITH 2 TYPE 2W BI-DIRECTIONAL PAVEMENT MARKERS SIDE BY SIDE.

DROP LANE LINE (L)
NTS

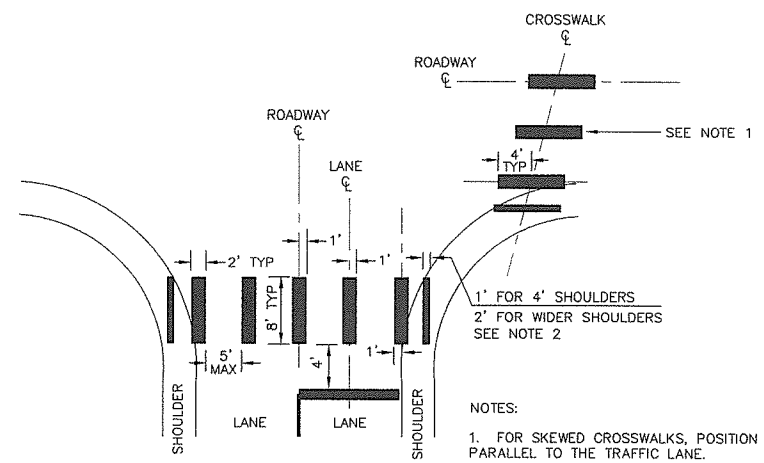

NOTES:

1. FOR SKEWED CROSSWALKS, POSITION THE LINES PARALLEL TO THE TRAFFIC LANE.
2. INSTALL CROSSWALK LINE IN SHOULDER AREA ONLY WHEN ADJACENT TO SIDEWALK OR SEPARATE WALKWAY.
3. CROSSWALK SHALL BE WHITE THERMOPLASTIC PAVEMENT MARKING MATERIAL.

CROSSWALK (K)
NTS

PERMANENT STRIPING NOT IN CONTRACT
Work to be performed by County Forces

90% SUBMITTAL
NOT FOR CONSTRUCTION

DESIGNED:	CTS
DRAWN:	JCLD
CRP:	330422
HORIZ.	
VERT.	
DATE:	05/28/2004
DWG:	T13
SHEET	61 OF 63

CALL 48 HOURS BEFORE YOU DIG
1-800-424-5555
"It's the Law"
NORTHWEST UTILITY NOTIFICATION CENTER

PROFESSIONAL ENGINEER
STATE OF WASHINGTON
27235
REGISTERED
PROFESSIONAL ENGINEER
EXPIRES: JAN. 20, 2005

DKS Associates
TRANSPORTATION SOLUTIONS
1000 SW Broadway, Suite 910
Portland, Oregon 97205-1022
Telephone (503) 243-3500
Fax (503) 274-1412

DESIGN & ENGINEERING DIVISION
NE 63RD STREET IMPROVEMENTS

NE 63RD STREET
STRIPING DETAILS

proud past, promising future
CLARK COUNTY
WASHINGTON

FS
E-BLOCK.dwg

LAYOUT NAME
9312.dwg

SCALE:
1

PLOT UPDATE:
4 am
day
24 2004

PLOT TIME:
4 am
day
24 2004

SIGN SCHEDULE

NO.	CODE	QTY	LEGEND/ DESCRIPTION	SIZE	REMARKS	RESPONSIBLE FOR INSTALLATION
1		2	PUBLIC ENTRANCE		REINSTALL EXISTING SIGN ON NEW STEEL SUPPORT.	
2		2	DO NOT ENTER		REINSTALL EXISTING SIGN ON NEW STEEL SUPPORT.	
3		1	NO PARKING		REMOVE AND SALVAGE EXISTING SIGN AND SUPPORT.	
4		4	STOP		REMOVE AND SALVAGE EXISTING SIGN AND SUPPORT.	
5		4	ALL WAY		REMOVE AND SALVAGE EXISTING SIGN.	
6		2	NE 63RD ST		REMOVE AND SALVAGE EXISTING SIGN.	
7		2	NE 72ND AV		REMOVE AND SALVAGE EXISTING SIGN.	
8		4	STOP AHEAD (SYMBOL)		REMOVE AND SALVAGE EXISTING SIGN AND SUPPORT.	
9		2	ENTERING GLENWOOD HILLS		REINSTALL EXISTING SIGN ON NEW STEEL SUPPORT.	
10		2	SLOW DOWN!		REINSTALL EXISTING SIGN.	
11		2	SPEED LIMIT 35		REINSTALL EXISTING SIGN ON NEW STEEL SUPPORT.	
12		1	SPEED LIMIT 25		REINSTALL EXISTING SIGN ON NEW STEEL SUPPORT.	
13		1	CALL BEFORE YOU DIG		REMOVE AND SALVAGE EXISTING SIGN.	
14		6	STOP		REINSTALL EXISTING SIGN ON NEW STEEL SUPPORT.	
15		6	NE 63RD ST		REINSTALL EXISTING SIGN.	
16		1	NE 81ST AV		REINSTALL EXISTING SIGN.	
17		1	NE 82ND CT PRIVATE ROAD		REINSTALL EXISTING SIGN ON NEW STEEL SUPPORT.	
18		1	NE 82ND AV PRIVATE ROAD		REINSTALL EXISTING SIGN.	
19		1	DEAD END		REINSTALL EXISTING SIGN ON NEW STEEL SUPPORT.	
20		1	NE 84TH PL		REINSTALL EXISTING SIGN.	
21		1	SCHOOL BUS STOP AHEAD		REINSTALL EXISTING SIGN ON NEW STEEL SUPPORT.	
22		1	SPEED LIMIT 25		RETAIN AND PROTECT EXISTING SIGN AND SUPPORT.	
23		1	NE 87TH AV		REINSTALL EXISTING SIGN.	
24		1	NE 88TH AV PRIVATE ROAD		REINSTALL EXISTING SIGN.	
25		1	ROAD NARROWS		REMOVE AND SALVAGE EXISTING SIGN AND SUPPORT.	
26		1	NE MEADOWS DR		REINSTALL EXISTING SIGN.	
27		1	END SCHOOL ZONE		REINSTALL EXISTING SIGN ON NEW STEEL SUPPORT.	
28		1	PEDESTRIAN (SYMBOL)		REINSTALL EXISTING SIGN ON NEW STEEL SUPPORT.	
29		1	SPEED LIMIT 30		REINSTALL EXISTING SIGN ON NEW STEEL SUPPORT.	
30	R3-8b	2	"ONLY"	48" x 30"	INSTALL NEW SIGN ON NEW STEEL SUPPORT.	
31	R3-16A	3	(BIKE SYMBOL) LANE ENDS	24" x 30"	INSTALL NEW SIGN ON NEW STEEL SUPPORT.	
32						
33						
34						
35						

GENERAL SIGNING NOTES:

1. ALL SIGNING SHALL CONFORM TO WASHINGTON STATE DEPARTMENT OF TRANSPORTATION'S SPECIFICATIONS (2004) AND THE MANUAL ON UNIFORM TRAFFIC CONTROL DEVICES.

2. ALL POSTS SHALL BE PERFORATED TUBULAR POSTS OR "UNISTRUT'S TELESPAR" POSTS UNLESS OTHERWISE SPECIFIED. SEE NOTES UNDER INSTALLATION DETAIL.

90% SUBMITTAL
NOT FOR CONSTRUCTION

DESIGNED: CTS
DRAWN: JCLD
CRP: 330422
HORIZ.
VERT.
DATE: 05/28/2004
DWG: T14
SHEET 62 OF 63

CALL 48 HOURS BEFORE YOU DIG
1-800-424-5555
"It's the Law"
NORTHWEST UTILITIES NOTIFICATION CENTER

PAUL L. COMPLEY
STATE OF WASHINGTON
27235
PROFESSIONAL ENGINEER
EXPIRES JAN 20, 2005

DKS Associates
TRANSPORTATION SOLUTIONS
1400 SW Fifth Avenue, Suite 500
Portland, Oregon 97201-5601
Phone: (503) 243-3500
Fax: (503) 274-1412

DESIGN & ENGINEERING DIVISION
NE 63RD STREET IMPROVEMENTS

NE 63RD STREET
SIGN SCHEDULE

proud past, promising future
CLARK COUNTY
WASHINGTON

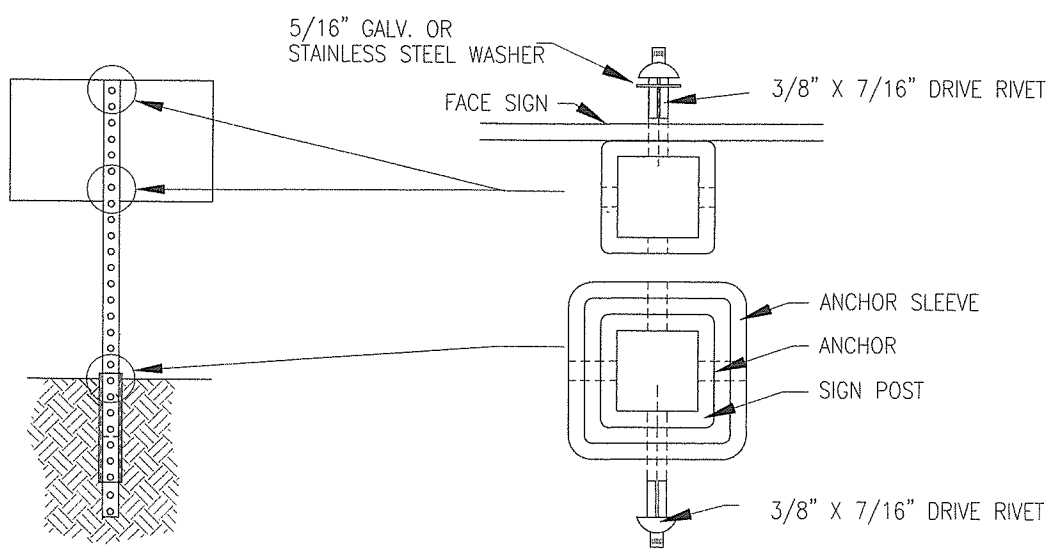

TYPICAL SIGN INSTALLATION

NTS

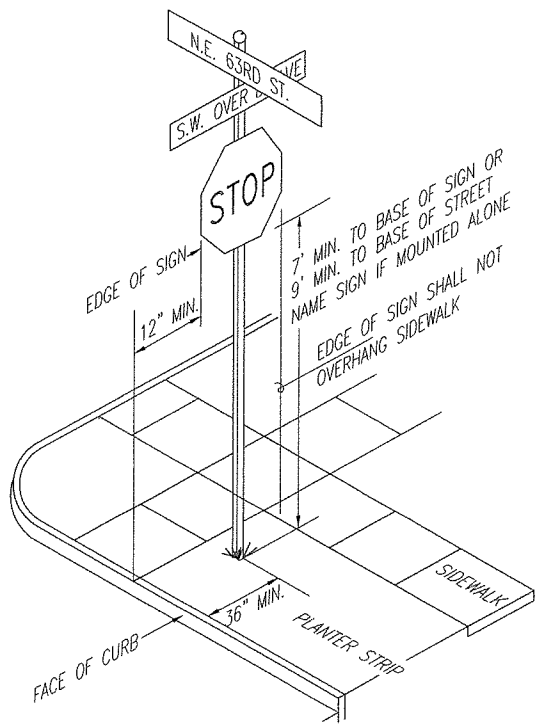

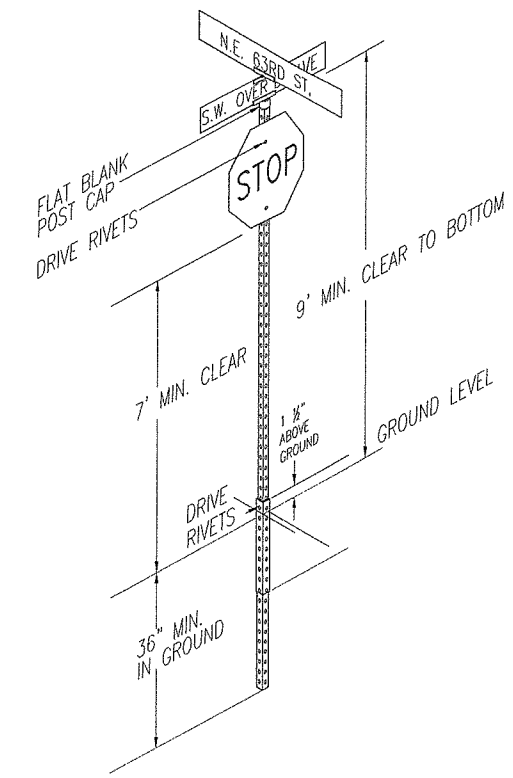

TYPICAL SIGN ASSEMBLY

NTS

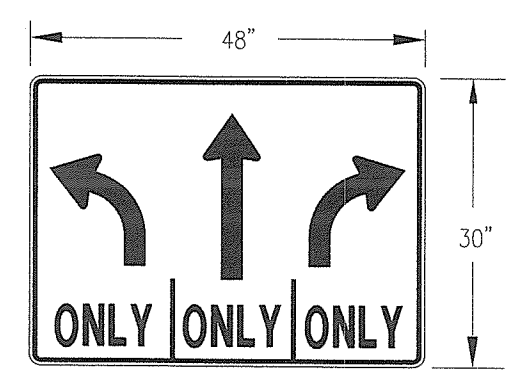

R3-8b (MUTCD)

GENERAL SIGNING NOTES:

1. ALL SIGNING SHALL CONFORM TO WASHINGTON STATE DEPARTMENT OF TRANSPORTATION'S SPECIFICATIONS (2004) AND THE MANUAL ON UNIFORM TRAFFIC CONTROL DEVICES.

90% SUBMITTAL
NOT FOR CONSTRUCTION

DESIGN & ENGINEERING DIVISION
NE 63RD STREET IMPROVEMENTS

NE 63RD STREET
SIGNING DETAILS

CLARK COUNTY WASHINGTON
proud past, promising future

DKS Associates
TRANSPORTATION SOLUTIONS
1400 SW Fifth Avenue, Suite 500 Portland, Oregon 97201-5702 Telephone: (503) 243-3500 Fax: (503) 243-1934

PROFESSIONAL ENGINEER
STATE OF WASHINGTON
JOHN C. LEIGHTON
EXPIRES: JAN. 30, 2005

CALL 48 HOURS BEFORE YOU DIG
1-800-424-5555
"It's the Law"
NORTHWEST UTILITIES NOTIFICATION CENTER

DESIGNED:	CTS
DRAWN:	JCLD
CRP:	330422
HORIZ.	
VERT.	
DATE:	05/28/2004
DWG:	T15
SHEET	63 OF 63