CAPITAL IMPROVEMENTS PROGRAM
COUNTY ROAD PROJECT # 311022

NE 76TH STREET

FROM SR-503 TO NE 147TH AVE

PLANS FOR THE CONSTRUCTION OF
ROADWAYS, STORM DRAINAGE, AND SIGNALIZATION

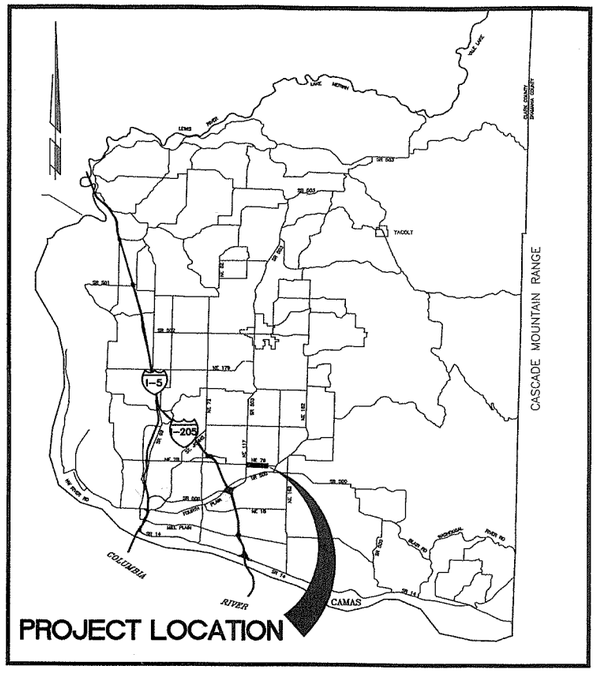

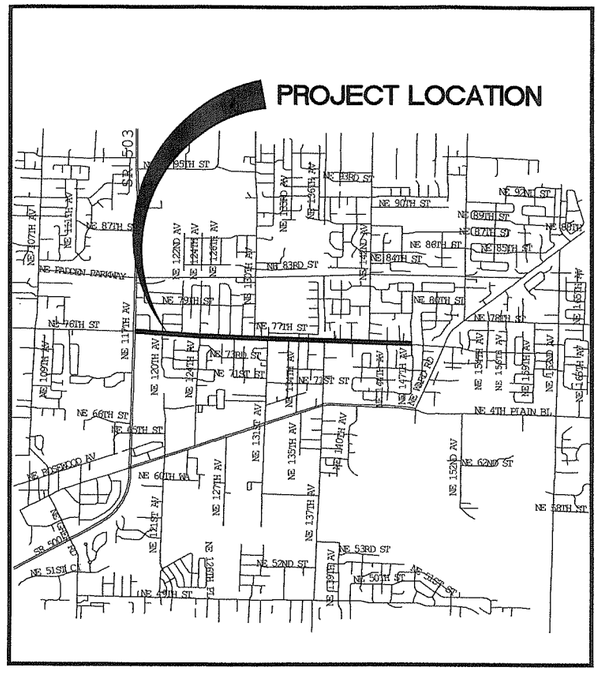

INDEX OF SHEETS

1	CV1	COVER SHEET
2	SQ1	SUMMARY OF QUANITITIES AND LEGEND
3	TS1	TYPICAL SECTIONS
4	TS2	TYPICAL SECTIONS
5	HV1	HORIZONTAL & VERTICAL CONTROL
6	SWF1	STORMWATER FACILITY #1
7	SWF2	STORMWATER FACILITY #2
8	SWF3	STORMWATER FACILITY #3
9	SWF4	STORMWATER FACILITY #3 DETAILS
10	SWF5	STORMWATER FACILITY #3 DETAILS
11	SWF6	STORMWATER FACILITY #4
12	SWF7	STORMWATER FACILITY #4 DETAILS
13	SWF8	STORMWATER FACILITY #4 DETAILS
14	SWF9	STORMWATER FACILITY #5
15	SWF10	STORMWATER FILTER DETAIL
16	SWF11	STORMWATER FACILITY WALLS
17	DO1	DRAINAGE DETAILS
18	DO2	DRAINAGE DETAILS
19	DO3	ROADWAY DETAILS
20	DO4	ROADWAY DETAILS
21	EC1	EROSION CONTROL PLAN
22	EC2	EROSION CONTROL PLAN
23	EC3	EROSION CONTROL DETAILS
24	W01	RETAINING WALL PROFILES
25	W02	RETAINING WALL DETAILS
26	PP1	PLAN & PROFILE (B.O.P. TO 15+00)
27	PP2	PLAN & PROFILE (STA 15+00 TO 20+00)
28	PP3	PLAN & PROFILE (STA 20+00 TO 25+00)
29	PP4	PLAN & PROFILE (STA 25+00 TO 30+00)
30	PP5	PLAN & PROFILE (STA 30+00 TO 35+00)
31	PP6	PLAN & PROFILE (STA 35+00 TO 40+00)
32	PP7	PLAN & PROFILE (STA 40+00 TO 45+00)
33	PP8	PLAN & PROFILE (STA 45+00 TO 50+00)
34	PP9	PLAN & PROFILE (STA 50+00 TO 55+00)
35	PP10	PLAN & PROFILE (STA 55+00 TO 60+00)
36	PP11	PLAN & PROFILE (STA 60+00 TO 65+00)
37	PP12	PLAN & PROFILE (STA 65+00 TO 70+00)
38	PP13	PLAN & PROFILE (STA 70+00 TO 75+00)
39	PP14	PLAN & PROFILE (STA 75+00 TO 80+00)
40	PP15	PLAN & PROFILE (STA 80+00 TO 85+00)
41	PP16	PLAN & PROFILE (STA 85+00 TO 90+00)
42	PP17	PROFILES (124TH, 127TH, 130TH, 131ST, 133RD, 134TH, 135TH)
43	PP18	PROFILES (137TH, 142ND, 144TH)
44	DP1	DRAINAGE PLAN (B.O.P. TO 15+00)
45	DP2	DRAINAGE PLAN (STA 15+00 TO 20+00)
46	DP3	DRAINAGE PLAN (STA 20+00 TO 25+00)
47	DP4	DRAINAGE PLAN (STA 25+00 TO 30+00)
48	DP5	DRAINAGE PLAN (STA 30+00 TO 35+00)
49	DP6	DRAINAGE PLAN (STA 35+00 TO 40+00)
50	DP7	DRAINAGE PLAN (STA 40+00 TO 45+00)
51	DP8	DRAINAGE PLAN (STA 45+00 TO 50+00)
52	DP9	DRAINAGE PLAN (STA 50+00 TO 55+00)
53	DP10	DRAINAGE PLAN (STA 55+00 TO 60+00)
54	DP11	DRAINAGE PLAN (STA 60+00 TO 65+00)
55	DP12	DRAINAGE PLAN (STA 65+00 TO 70+00)
56	DP13	DRAINAGE PLAN (STA 70+00 TO 75+00)
57	DP14	DRAINAGE PLAN (STA 75+00 TO 80+00)
58	DP15	DRAINAGE PLAN (STA 80+00 TO 85+00)
59	DP16	DRAINAGE PLAN (STA 85+00 TO 90+00)
60	DP17	DRAINAGE PLAN (NE 137TH AVE STA 0+50 TO 4+50)
61	I01	INTERSECTION PLAN (SR503, 120TH, 122ND, 124TH)
62	I02	INTERSECTION PLAN (126TH, 127TH, 128TH)
63	I03	INTERSECTION PLAN (131ST, 133RD, 134TH)
64	I04	INTERSECTION PLAN (135TH, 137TH, 142ND)
65	I05	INTERSECTION PLAN (144TH, 147TH)
66	SS1	SIGNING & STRIPING PLAN
67	SS2	SIGNING & STRIPING PLAN
68	SS3	SIGNING & STRIPING PLAN
69	SS4	SIGNING & STRIPING PLAN
70	TRS1	TRAFFIC SIGNAL MODIFICATION (NE 76TH ST-NE 124TH AVE)
71	TRS2	TRAFFIC SIGNAL PLAN (NE 76TH ST-NE 124TH AVE)
72	TRS3	NE 130TH @ NE 76TH ST LOOP REPLACEMENT
73	TRS4	NE 137TH @ NE 76TH ST LOOP REPLACEMENT
74	TRS5	TRAFFIC SIGNAL SYSTEM MODIFICATION (NE 76TH ST @ SR-503)
75	SP1	SEWER PLAN (B.O.P. TO 20+00)
76	SP2	SEWER PLAN (STA 20+00 TO 25+00)
77	SP3	SEWER PLAN (STA 25+00 TO 30+00)
78	SP4	SEWER PLAN (STA 30+00 TO 35+00)
79	SP5	SEWER PLAN (STA 35+00 TO 40+00)
80	SP6	SEWER PLAN (STA 40+00 TO 45+00)
81	SP7	SEWER PLAN (STA 45+00 TO 50+00)
82	SP8	SEWER PLAN (STA 50+00 TO 55+00)
83	SP9	SEWER PLAN (STA 55+00 TO 60+00)
84	SP10	SEWER PLAN (STA 60+00 TO 65+00)
85	SP11	SEWER PLAN (STA 65+00 TO 70+00)
86	SP12	SEWER PLAN (STA 70+00 TO 75+00)
87	SP13	SEWER PLAN (STA 75+00 TO 80+00)
88	SP14	SEWER PLAN (STA 80+00 TO 85+00)
89	SP15	SEWER PLAN (STA 85+00 TO 90+00)
90	SD1	SEWER DETAILS 1
91	SD2	SEWER DETAILS 2
92	LSC1	LANDSCAPING PLAN
93	LSC2	LANDSCAPING PLAN

THOMAS D. GRANGE
STATE OF WASHINGTON
32068
REGISTERED PROFESSIONAL ENGINEER
EXPIRES: JANUARY 20, 2006
2-19-04

BRUCE A. ELLIS
STATE OF WASHINGTON
39868
REGISTERED PROFESSIONAL ENGINEER
EXPIRES: APRIL 7, 2004
2-17-04

ENG #2002-00058

COMMISSIONERS:

BETTY SUE MORRIS, Chair
JUDIE STANTON, Commissioner
CRAIG PRIDEMORE, Commissioner

proud past, promising future
CLARK COUNTY
WASHINGTON

DEPARTMENT OF
PUBLIC WORKS

Quality Assurance	Project Manager	PW Director/ County Engineer
2/23/04 DATE:	2/23/04 DATE:	2/18/04 DATE:
Greg Shafer, P.E.	Scott Sawyer, P.E.	Peter Capell, P.E.

proud past, promising future
CLARK COUNTY
WASHINGTON

Recommended for Approval

Grading WCW 2-19-04 Erosion WCW 2-19-04

Storm Water Plan WCW 2-19-04

Development Review Manager (2/19/2004) Date

DESIGN AND ENGINEERING DIVISION- DESIGN SECTION

SUMMARY OF QUANTITIES

ITEM NUM	BID ITEM	QUANTITY	UNIT	DESCRIPTION
1	109.07	1	L.S.	MOBILIZATION
2	109.10	1	CALC.	MINOR CHANGE
3	109.13	5	HOUR	REPLACEMENT STAKING SERVICES
4	109.15	1	L.S.	TEMPORARY CONSTRUCTION PERMIT/PROPERTY OWNER AGREEMENT WORK
5	109.20	20	DAY	INCENTIVE
6	110.00	4000	HOUR	TRAFFIC CONTROL LABOR
7	110.10	1400	HOUR	TRAFFIC CONTROL SUPERVISOR
8	110.30	1	L.S.	TEMPORARY TRAFFIC CONTROL DEVICES
9	110.31	2	EACH	PORTABLE CHANGEABLE MESSAGE SIGN
10	110.32	288	HOUR	OPERATION OF PORTABLE CHANGEABLE MESSAGE SIGN
11	110.40	600	S.F.	CONSTRUCTION SIGNS - CLASS "A"
12	110.41	82	S.F.	INSTALL PROJECT IDENTIFICATION SIGN
13	110.61	1	EACH	TYPE III BARRICADE (Permanent)
14	201.00	1	L.S.	CLEARING AND GRUBBING
15	201.20	1	EST.	ROADSIDE CLEANUP
16	202.00	1	L.S.	REMOVAL OF STRUCTURE AND OBSTRUCTION
17	203.10	18351	C.Y.	ROADWAY EXCAVATION (INCL. HAUL)
18	203.15	795	C.Y.	STORMWATER FACILITY EXCAVATION (INCL. HAUL)
19	207.00	1500	MGAL	WATER
20	212.10	787	S.Y.	IMPERMEABLE LINER
21	404.50	8980	TON	CRUSHED SURFACING BASE COURSE
22	404.52	688	TON	CRUSHED SURFACING TOP COURSE
23	504.02	7655	TON	ASPHALT CONCRETE PAVEMENT CL. A
24	504.03	8677	TON	ASPHALT CONCRETE PAVEMENT CL. E
25	504.11	1877	L.F.	SAWCUT EXISTING PAVEMENT
26	504.14	1620	S.Y.	PLANING BITUMIOUS PAVEMENT
27	504.21	1386	S.Y.	ASPHALT CONCRETE APPROACH CL. A
28	606.05	125	LF	HANDRAIL FOR WALL
29	612.41	138	S.Y.	GEOGRID SOIL REINFORCEMENT FABRIC
30	612.51	1964	S.F.	MODULAR/SEGMENTAL BLOCK RETAINING WALL (INCL. CAP UNIT)
31	701.06	40	L.F.	UNDERDRAIN PIPE 6 IN. DIAM.
32	701.12	305	L.F.	UNDERDRAIN PIPE 12 IN. DIAM.
33	701.66	40	L.F.	DRAIN PIPE 6 IN. DIAM.
34	702.70	345	L.F.	DUCTILE IRON PIPE 10 IN. DIAM.
35	704.10	1504	L.F.	STORM SEWER PIPE, 10 IN. DIAM.
36	704.12	3876	L.F.	STORM SEWER PIPE, 12 IN. DIAM.
37	704.18	2634	L.F.	STORM SEWER PIPE, 18 IN. DIAM.
38	705.01	9	EACH	MANHOLE 48 IN. DIAM. TYPE 1
39	705.14	31	EACH	MANHOLE 48 IN. DIAM. TYPE 3
40	705.35	19	EACH	CATCH BASIN TYPE 1
41	705.39	3	EACH	CATCH BASIN TYPE 2, 72 IN (w/ manhole ring)
42	705.60	12	EACH	PRECAST CONCRETE DRYWELL
43	705.62	12	EACH	CONCRETE CURB INLET
44	705.63	35	EACH	CONCRETE COMBINATION CURB INLET
45	705.64	3	EACH	CONCRETE DITCH INLET
46	705.65	70	EACH	LOW PROFILE DEBRIS TRAP
47	705.70	4	EACH	AREA DRAIN
48	705.72	1	EACH	CONC. SETTLEMENT BASIN W/ ENERGY DISSIPATER (SWF #3)
49	705.72	1	EACH	CONC. SETTLEMENT BASIN W/ ENERGY DISSIPATER (SWF #4)
50	705.74	33	L.F.	CEMENT CONCRETE OUTLET TROUGH
51	705.77	2	EACH	ABANDON EXISTING DRYWELL
52	705.80	33	EACH	ADJUST MANHOLE/ CATCH BASIN/ INLET/ DRYWELL METHOD 1
53	705.86	13	EACH	CONNECTION TO DRAINAGE STRUCTURE
54	706.00	1	EACH	STANDARD PRECAST STORMFILTER TM UNIT (SWF #1) (13 CART.)
55	706.00	1	EACH	STANDARD PRECAST STORMFILTER TM UNIT (SWF #2) (26 CART.)
56	706.00	1	EACH	STANDARD PRECAST STORMFILTER TM UNIT (SWF #5) (21 CART.)
57	708.00	8399	L.F.	TRENCH SAFETY SYSTEM
58	708.03	23	EACH	PLUGGING EXISTING PIPE
59	709.00	65	EACH	ADJUST GAS VALVE RIM, COVER OR FRAME
60	715.09	51	EACH	RELOCATE WATER METER BOX AND SERVICE
61	801.20	130	DAY	ESC LEAD
62	801.22	20	S.Y.	EROSION CONTROL BLANKET
63	801.40	3	EACH	STABILIZED CONSTRUCTION ENTRANCE
64	801.41	3	EACH	TIRE WASH (RE-CIRCULATING)
65	801.50	85	EACH	INLET PROTECTION
66	801.51	5300	L.F.	SILT FENCE
67	801.53	1	EACH	EROSION CONTROL AND SPILL PREVENTION REINSPECTION FEE
68	801.57	1	L.S.	SPCC PLAN
69	802.82	750	C.Y.	COMPOST AMENDED TOPSOIL
70	802.89	1	ACRE	SEEDING, FERTILIZING, AND MULCHING
71	802.90	0.16	ACRE	STORMWATER FACILITY SEEDING AND MULCHING
72	802.98	1680	S.Y.	SOD INSTALLATION
73	804.01	12079	L.F.	CEMENT CONC. TRAFFIC CURB AND GUTTER
74	804.09	74	L.F.	FLOW SPREADER CURB
75	806.00	2443	S.Y.	CEMENT CONC. APPROACH 3 DAY
76	807.10	210	L.F.	TYPE C PRECAST TRAFFIC CURB
77	811.00	143	L.F.	BEAM GUARDRAIL TYPE 1
78	811.04	4	EACH	BEAM GUARDRAIL ANCHOR TYPE 5
79	811.20	85	L.F.	REMOVING GUARDRAIL
80	812.11	139	L.F.	CHAIN LINK FENCE TYPE 3
81	812.13	354	L.F.	CHAIN LINK FENCE TYPE 6
82	812.18	2	EACH	DOUBLE 20 FT. CHAIN LINK GATE
83	812.23	1	EACH	SINGLE 6 FT. CHAIN LINK GATE
84	812.30	236	L.F.	WIRE FENCE TYPE 1
85	812.51	230	L.F.	WIRE FENCE RELOCATION, (INCL. GATE)
86	812.53	1798	L.F.	FENCE REMOVAL
87	812.85	2149	L.F.	CONSTRUCT 6 FOOT CEDAR FENCE
88	812.93	770	L.F.	TEMPORARY FENCING PER PROPERTY OWNER AGREEMENT
89	813.00	13	EACH	MONUMANT CASE AND COVER
90	813.01	8	EACH	ADJUST SURVEY MONUMANT CASE AND COVER
91	814.01	6670	S.Y.	CEMENT CONCRETE SIDEWALK
92	814.05	87	EACH	DETECTABLE WARNING PATTERN
93	814.20	4	EACH	RAMP IN EXIST SIDEWALK TYPE 2 – SINGLE
94	814.22	5	EACH	RAMP IN EXIST SIDEWALK TYPE 2 – DOUBLE
95	814.31	9	EACH	RAMP IN EXIST SIDEWALK TYPE 4 – SINGLE
96	818.00	19	EACH	MAILBOX SUPPORT TYPE 1
97	818.20	7	EACH	MAILBOX SUPPORT TYPE 2
98	818.30	4	EACH	NBU MAILBOX, 8 UNIT TYPE 1
99	820.25	1	L.S.	TRAFFIC SIGNAL SYSTEM LOOP REPLACEMENT (NE 76th St. at SR-503)
100	820.25	1	L.S.	TRAFFIC SIGNAL SYSTEM LOOP REPLACEMENT (NE 76th St. at NE 124th Ave.)
101	820.25	1	L.S.	TRAFFIC SIGNAL SYSTEM LOOP REPLACEMENT (NE 76th St. at NE 130th Ave.)
102	820.25	1	L.S.	TRAFFIC SIGNAL SYSTEM LOOP REPLACEMENT (NE 76th St. at NE 137th Ave.)
103	820.35	1	L.S.	TRAFFIC SIGNAL MODIFICATION (NE 76th St. at NE 124th Ave.)
104	821.10	3	EACH	RELOCATE PRIVATE SIGN
105	822.20	1400	L.F.	REMOVING PAINT LINE
106	822.21	3	EACH	REMOVING PAINTED TRAFFIC MARKING

CITY OF VANCOUVER BID QUANTITIES (SEWER)

ITEM NUM	BID ITEM	QUANTITY	UNIT	DESCRIPTION
107	109.07	1	L.S.	MOBILIZATION (Sewer)
108	708.00	5335	L.F.	TRENCH SAFETY SYSTEM (Sewer)
109	708.20	12797	TON	SELECT GRANULAR BACKFILL (IMPORT MATERIAL)
110	709.92	2671	L.F.	TRENCH EXCAVA., BACKFILL & COMP. LESS 10 FT.
111	709.92	435	L.F.	TRENCH EXCAVA., BACKFILL & COMP. 10 FT. TO 12 FT.
112	709.92	191	L.F.	TRENCH EXCAVA., BACKFILL & COMP. 12 FT. TO 14 FT.
113	709.92	562	L.F.	TRENCH EXCAVA., BACKFILL & COMP. OVER 14 FT.
114	717.11	1113	L.F.	4-INCH PVC SEWER PIPE LATERALS
115	717.12	315	L.F.	6-INCH PVC SEWER PIPE LATERALS
116	717.13	3253	L.F.	8-INCH PVC SEWER PIPE AND BEDDING
117	717.20	108	L.F.	4-INCH DUCTILE IRON PIPE LATERALS
118	717.21	39	L.F.	6-INCH DUCTILE IRON PIPE LATERALS
119	717.22	507	L.F.	8-INCH DUCTILE IRON PIPE AND BEDDING
120	717.43	32	EACH	8-INCH PVC TEES OR WYES
121	717.44	6	EACH	8-INCH DUCTILE IRON TEES OR WYES
122	717.49	9	EACH	LATERAL TAP (CONNECTION TO EXISTING SEWER)
123	717.50	2	EACH	CONNECTION TO EXISTING MANHOLE
124	717.50	2	EACH	LATERAL CONNECTION TO MANHOLE
125	717.51	13	EACH	SANITARY MANHOLES LESS THAN 10 FEET (DEPTH)
126	717.51	3	EACH	SANITARY MANHOLES 10 FEET TO 14 FEET (DEPTH)
127	717.51	1	EACH	SANITARY MANHOLES OVER 14 FEET (DEPTH)
128	719.01	17	EACH	CLEANOUT

CITY OF VANCOUVER BID QUANTITIES (WATER)

ITEM NUM	BID ITEM	QUANTITY	UNIT	DESCRIPTION
129	708.00	120	L.F.	TRENCH SAFETY SYSTEM (Water)
130	709.00	72	EACH	ADJUST WATER VALVE RIM, COVER OR FRAME
131	709.04	120	L.F.	CL. 52 D.I. PIPE FOR WATER MAIN, 6 IN. DIAM.
132	709.92	120	L.F.	TRENCH AND BACKFILL
133	714.02	6	EACH	MOVING EXISTING HYDRANTS
134	715.09	5	EACH	WATER SERVICE EXTENSION OR RELOCATION

LEGEND

- ROW LINE
- NEW EDGE OF PAVEMENT
- NEW CURB FACE LINE
- NEW CURB BACK LINE
- NEW SIDEWALK
- NEW CENTER LINE
- — X — X — NEW FENCE LINE
- NEW STORM DRAIN OR CULVERT
- · F · · · F · NEW FILL LIMITS
- — C — C — NEW CUT LIMITS
- SAWCUT LINE
- PERMANENT SLOPE EASEMENT
- — SF — SF — NEW SILT FENCE
- EXISTING EDGE OF PAVEMENT
- EXISTING CURB LINE
- EXISTING CENTER LINE
- — X — X — EXISTING FENCE LINE
- —— T —— EXISTING TELEPHONE LINE
- —— W —— EXISTING WATER LINE
- —— E —— EXISTING UNDERGROUND ELECTRIC
- —— S —— EXISTING SANITARY SEWER LINE
- —— STM —— EXISTING STORM DRAINAGE
- —— G —— EXISTING GAS LINE
- EXISTING CULVERT
- EXISTING DITCH CENTER LINE
- EXISTING GUARDRAIL

SYMBOLS

- NEW CATCH BASIN (CB)
- NEW MANHOLE (MH)
- NEW CURB INLET (CI)
- NEW COMBINATION CURB INLET (CCI)
- MB NEW MAIL BOX
- NEW HANDICAP RAMP
- C100 CURVE TABLE
- EXISTING TRANSFORMER
- EXISTING ELEC TOWER
- SAN EXISTING SANITARY SEWER MH
- EXISTING FIRE HYDRANT
- CL EXISTING CLEAN OUT
- EXISTING GAS VALVE
- EXISTING WATER METER
- EXISTING WATER VALVE
- EXISTING SIGNAL POLE
- T EXISTING TELEPHONE VAULT
- tv EXISTING TELEVISION BOX
- EXISTING WELL
- EXISTING BRUSH LINE
- EXISTING HEDGE
- EXISTING CURB INLET (CI)
- EXISTING CATCH BASIN (CB)
- S EXISTING STORM MH
- EXISTING MISC MH
- EXISTING SHRUB
- EXISTING CONIFEROUS TREE
- EXISTING DECIDUOUS TREE
- EXISTING SIGN
- EXISTING DECIDUOUS TREE
- J EXISTING J BOX
- T EXISTING TELEPHONE MANHOLE
- EXISTING TELEPHONE POLE
- EXISTING LIGHT
- EXISTING GUY ANCHOR
- EXISTING POWER POLE
- MB EXISTING MAIL BOX
- T EXISTING TELEPHONE PEDESTAL
- EXISTING SPRINKLER HEAD
- TRAVERSE POINT
- TEST HOLE

DESIGNED	BAK
DRAWN	KB
CRP	311022
HOR.	NA
VERT.	NA
DATE	1/23/04
DWG:	SQ1
SHEET 2	OF 93

CALL 48 HOURS BEFORE YOU DIG
1-800-553-4344
"It's the Law"
NORTHWEST UTILITIES NOTIFICATION CENTER

BRUCE A. KLUG
STATE OF WASHINGTON
39868
REGISTERED PROFESSIONAL ENGINEER
EXPIRES: APRIL 7, 2004
2-19-04

DESIGN & ENGINEERING DIVISION
DESIGN SECTION

NE 76TH ST (SR-503 TO NE 147TH AVE)
SUMMARY OF QUANTITIES & LEGEND

CLARK COUNTY WASHINGTON
proud past, promising future

Contractor to construct sidewalks as shown per plans, additionally contractor must provide minimum 5' width clear of any obstructions to said sidewalk. When widening or adjustment of sidewalk is required to new or existing sidewalk to accommodate conditions, contractor is to notify and have approval by engineer, expect 10 locations.

NOTE:
SEE PLAN & PROFILE SHEETS FOR ROW WIDTHS

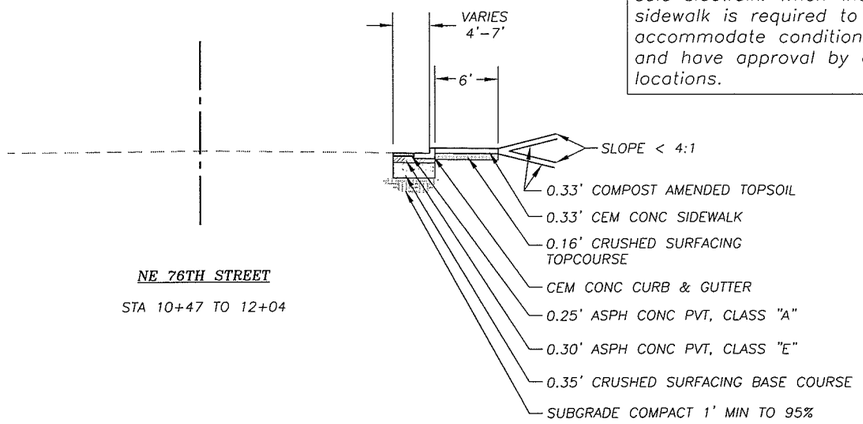

NE 76TH STREET

STA 10+47 TO 12+04

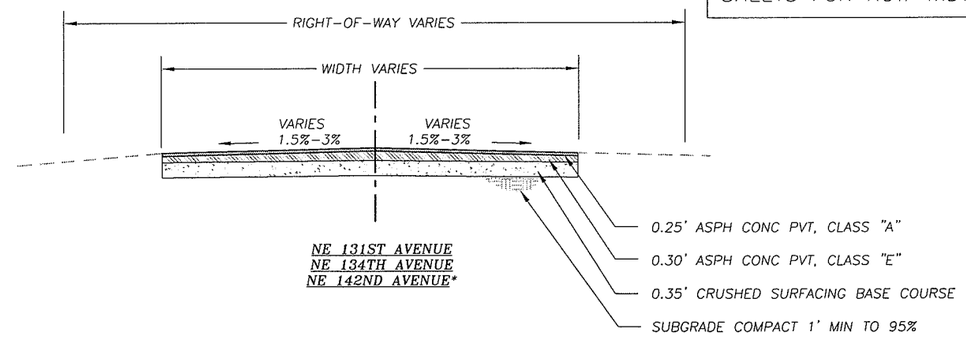

NE 131ST AVENUE
NE 134TH AVENUE
NE 142ND AVENUE*

* SEE DP14 FOR DITCH/SLOPE CONSTRUCTION.

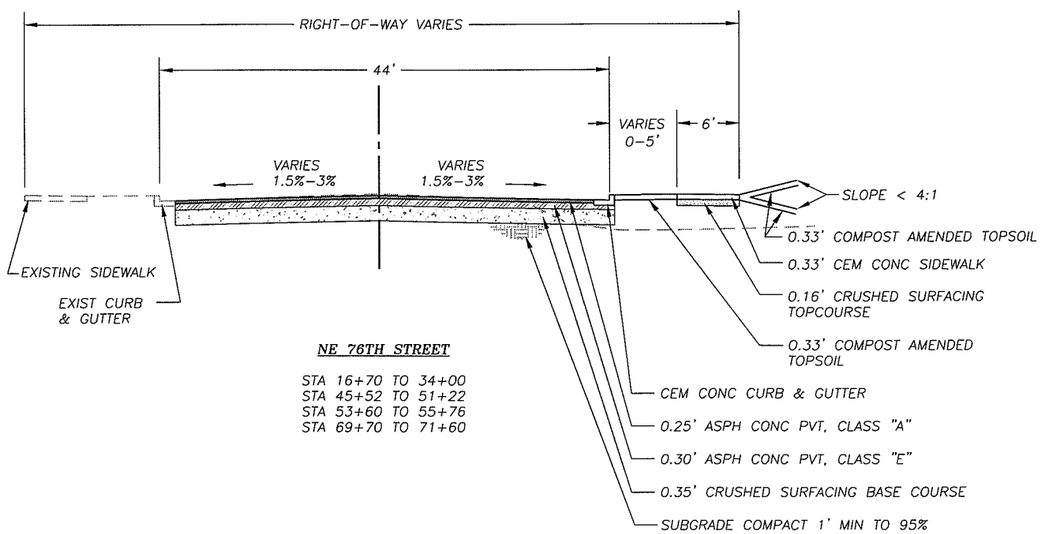

NE 76TH STREET

STA 16+70 TO 34+00
STA 45+52 TO 51+22
STA 53+60 TO 55+76
STA 69+70 TO 71+60

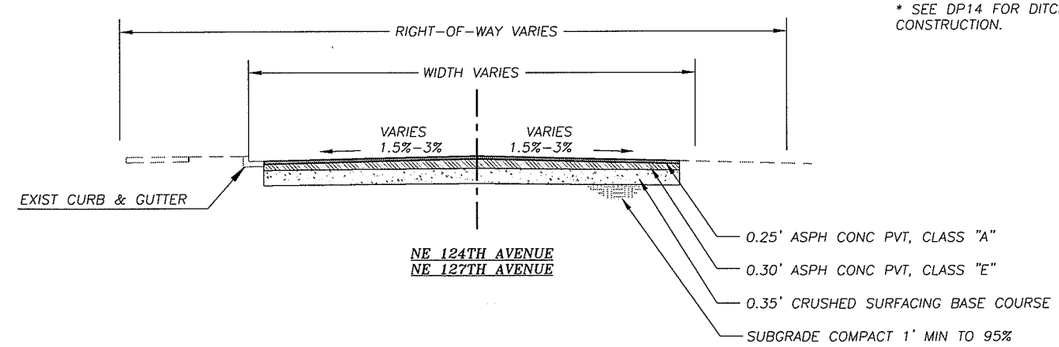

NE 124TH AVENUE
NE 127TH AVENUE

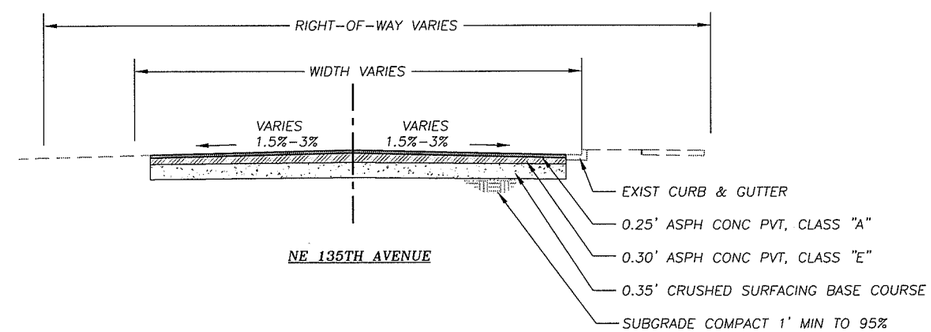

NE 135TH AVENUE

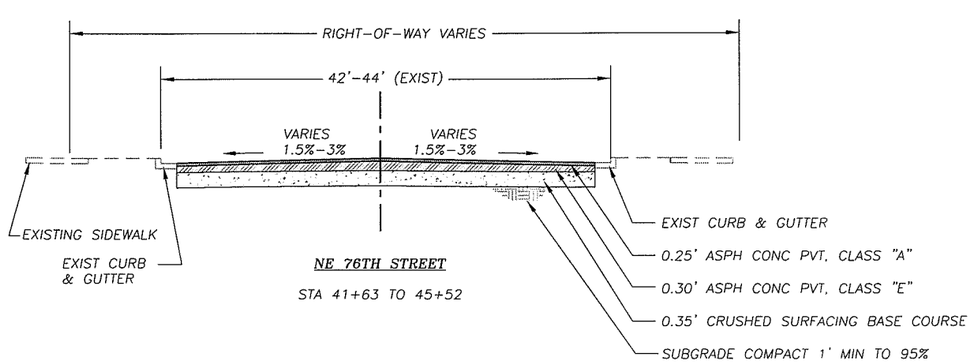

NE 76TH STREET

STA 41+63 TO 45+52

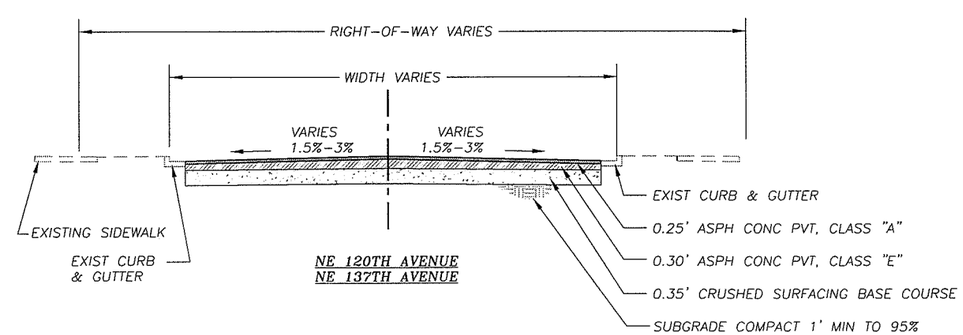

NE 120TH AVENUE
NE 137TH AVENUE

DESIGNED	BAK
DRAWN	KB
CRP	311022
HOR.	NA
VERT.	NA
DATE	3/4/04
DWG:	TS1
SHEET 3	OF 93

CALL 48 HOURS BEFORE YOU DIG
1-800-553-4344
"It's the Law"
NORTHWEST UTILITIES NOTIFICATION CENTER

STATE OF WASHINGTON
BRUCE A. KLUG
19886
REGISTERED PROFESSIONAL ENGINEER
EXPIRES 3/5/2004
3-4-04

DESIGN & ENGINEERING DIVISION
DESIGN SECTION

NE 76TH ST (SR-503 TO NE 147TH AVE)
TYPICAL SECTIONS

proud past, promising future
CLARK COUNTY
WASHINGTON

N:\CIP\PROJECTS\311022-76thEtal\DESIGN\DWGS\76TS01-2.dwg, 3/3/2004 1:09:17 PM, klugb

NOTE:
SEE PLAN & PROFILE
SHEETS FOR ROW WIDTHS

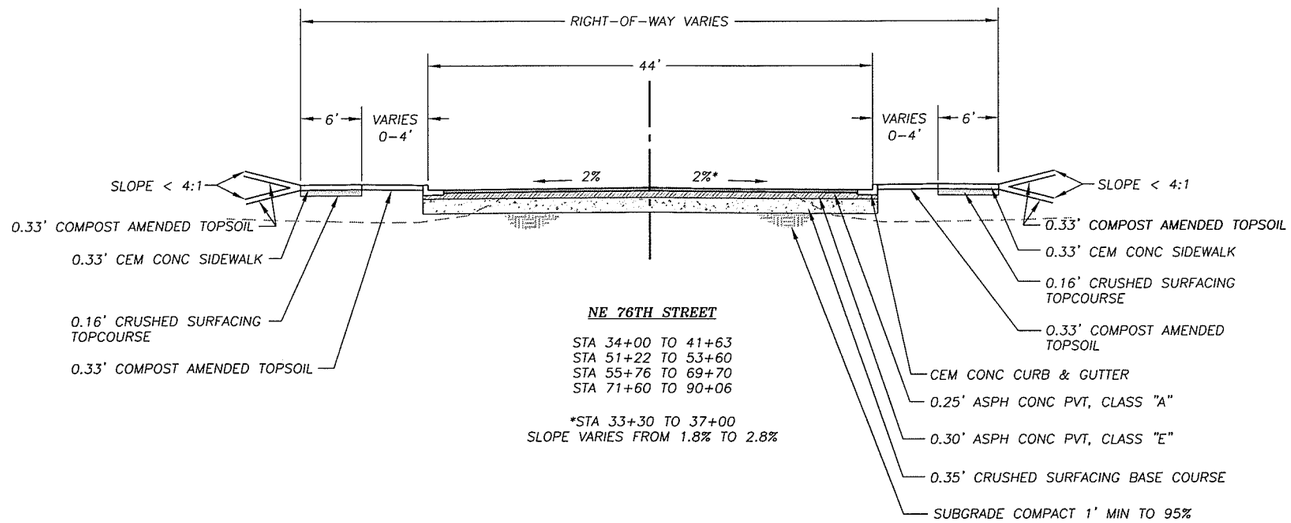

Contractor to construct sidewalks as shown per plans, additionally contractor must provide minimum 5' width clear of any obstructions to said sidewalk. When widening or adjustment of sidewalk is required to new or existing sidewalk to accommodate conditions, contractor is to notify and have approval by engineer, expect 10 locations.

DESIGNED	BAK
DRAWN	KB
CRP	311022
HOR.	NA
VERT.	NA
DATE	3/4/04
DWG:	TS2
SHEET 4	OF 93

CALL 48 HOURS BEFORE YOU DIG
1-800-553-4344
"It's the Law"
NORTHWEST UTILITIES NOTIFICATION CENTER

BRUCE A. KLUG
STATE OF WASHINGTON
20888
REGISTERED PROFESSIONAL ENGINEER
EXPIRES APRIL 2, 2004
3-4-04

DESIGN & ENGINEERING DIVISION
DESIGN SECTION

NE 76TH ST (SR-503 TO NE 147TH AVE)
TYPICAL SECTIONS

proud past, promising future
CLARK COUNTY
WASHINGTON

N:\CIP\PROJECTS\311022-76thEast\DESIGN\DWGS\76TS01-2.dwg, 3/3/2004 1:09:29 PM, Klugb

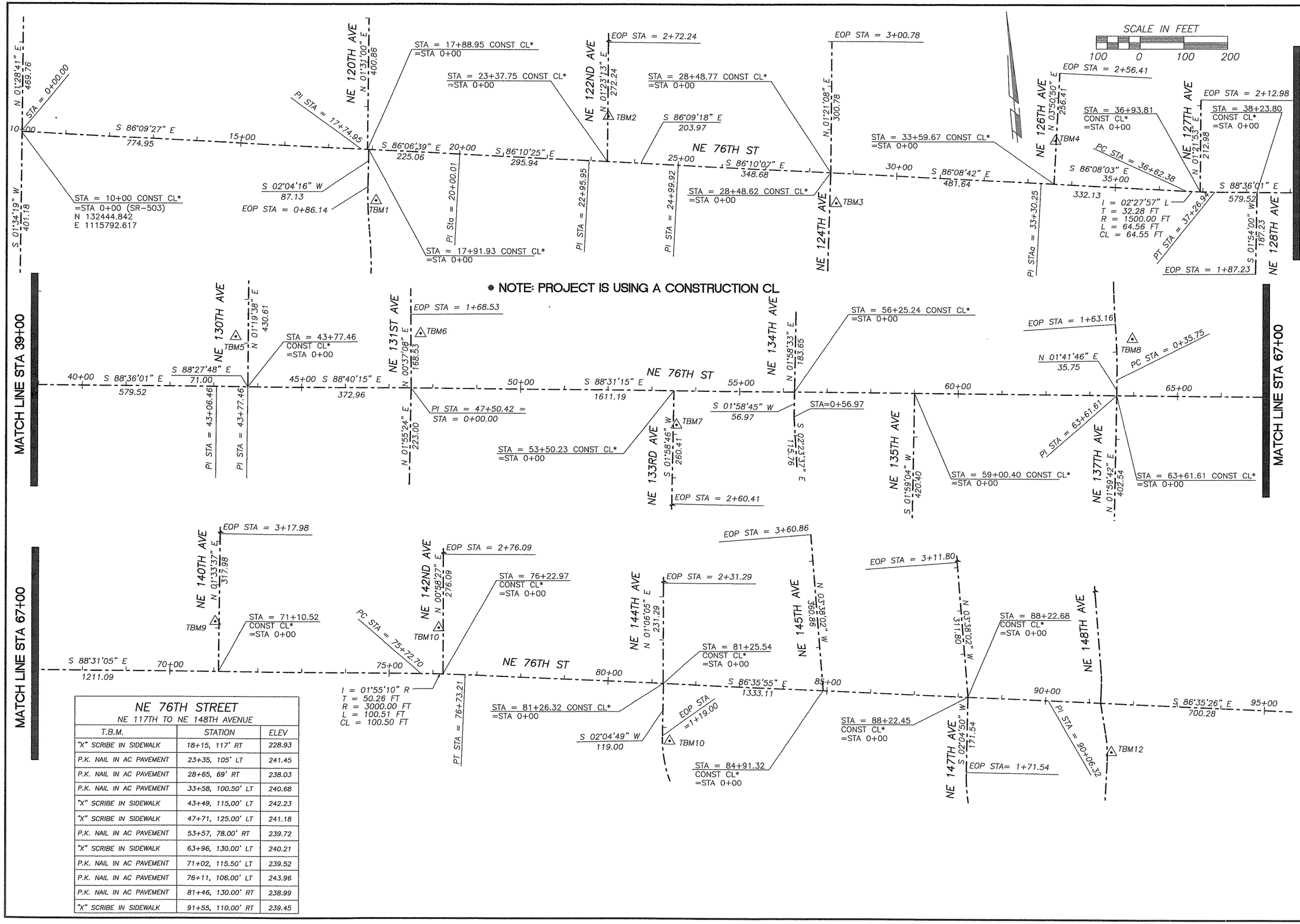

NE 76TH STREET

NE 117TH TO NE 148TH AVENUE

T.B.M.	STATION	ELEV
"X" SCRIBE IN SIDEWALK	18+15, 117' RT	228.93
P.K. NAIL IN AC PAVEMENT	23+35, 105' LT	241.45
P.K. NAIL IN AC PAVEMENT	28+65, 69' RT	238.03
P.K. NAIL IN AC PAVEMENT	33+58, 100.50' LT	240.68
"X" SCRIBE IN SIDEWALK	43+49, 115,00' LT	242.23
"X" SCRIBE IN SIDEWALK	47+71, 125.00' LT	241.18
P.K. NAIL IN AC PAVEMENT	53+57, 78.00' RT	239.72
"X" SCRIBE IN SIDEWALK	63+96, 130.00' LT	240.21
P.K. NAIL IN AC PAVEMENT	71+02, 115.50' LT	239.52
P.K. NAIL IN AC PAVEMENT	76+11, 106.00' LT	243.96
P.K. NAIL IN AC PAVEMENT	81+46, 130.00' RT	238.99
"X" SCRIBE IN SIDEWALK	91+55, 110.00' RT	239.45

DESIGNED	BAK
DRAWN	RK
CRP	311022
HOR.	1"=100'
VERT.	NA
DATE	1/16/04
DWG:	HV1
SHEET 5	OF 93

CALL 48 HOURS BEFORE YOU DIG
1-800-553-4344
"It's the Law"
NORTHWEST UTILITIES NOTIFICATION CENTER

STATE OF WASHINGTON
GARY A. KLUG
36868
REGISTERED PROFESSIONAL ENGINEER
EXPIRES APRIL 7, 2004
2-17-04

DESIGN & ENGINEERING DIVISION
DESIGN SECTION

NE 76TH ST (SR-503 TO NE 147TH AVE)
HORIZONTAL & VERTICAL CONTROL

proud past, promising future
CLARK COUNTY
WASHINGTON

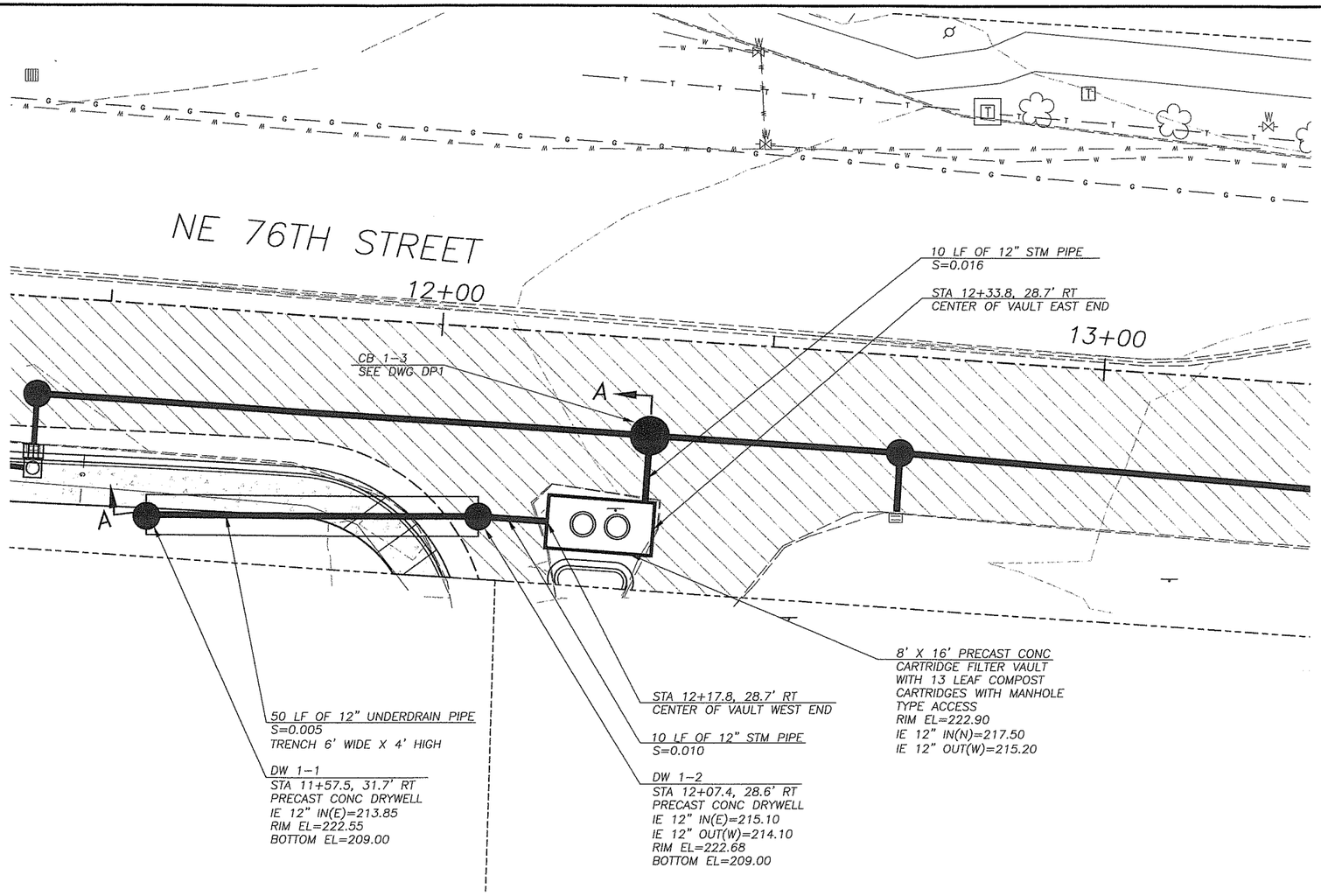

SEE DWG DP1 FOR ADDITIONAL DRAINAGE INFORMATION

SCALE IN FEET

10 0 10 20

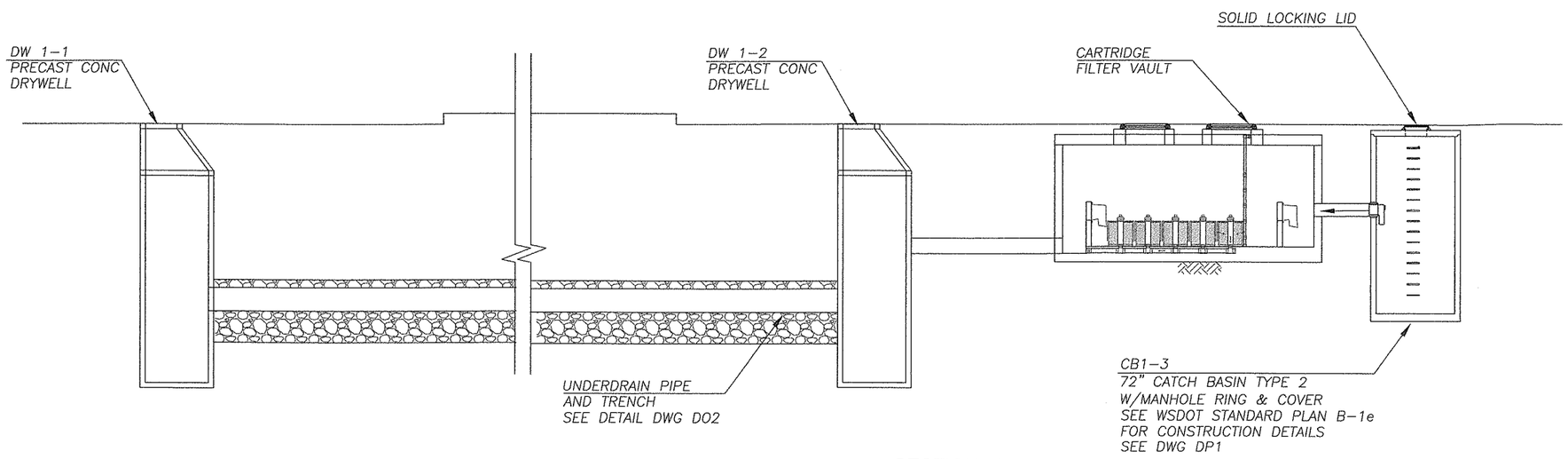

SECTION A

DESIGNED	TG
DRAWN	BK
CRP	311022
HOR.	NA
VERT.	NA
DATE	1/16/04
DWG:	SWF1
SHEET 6	OF 93

CALL 48 HOURS BEFORE YOU DIG 1-800-553-4344 "It's the Law" NORTHWEST UTILITIES NOTIFICATION CENTER

STATE OF WASHINGTON THOMAS D. GRANGE 32084 REGISTERED PROFESSIONAL ENGINEER EXPIRES: JANUARY 20, 2005

DESIGN & ENGINEERING DIVISION
DESIGN SECTION

NE 76TH ST (SR-503 TO NE 147TH AVE)
STORMWATER FACILITY #1

proud past, promising future
CLARK COUNTY WASHINGTON

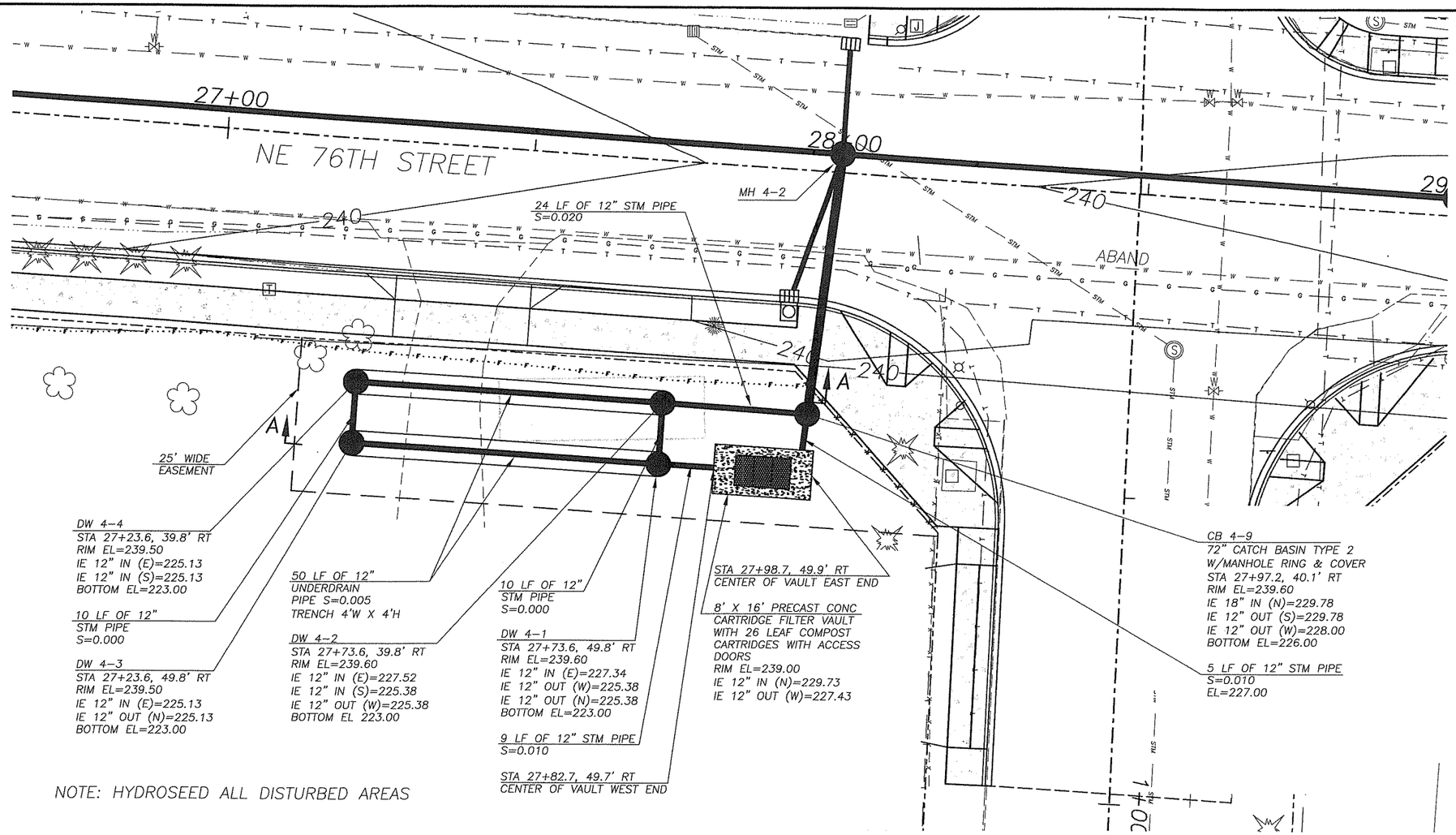

NOTE: HYDROSEED ALL DISTURBED AREAS

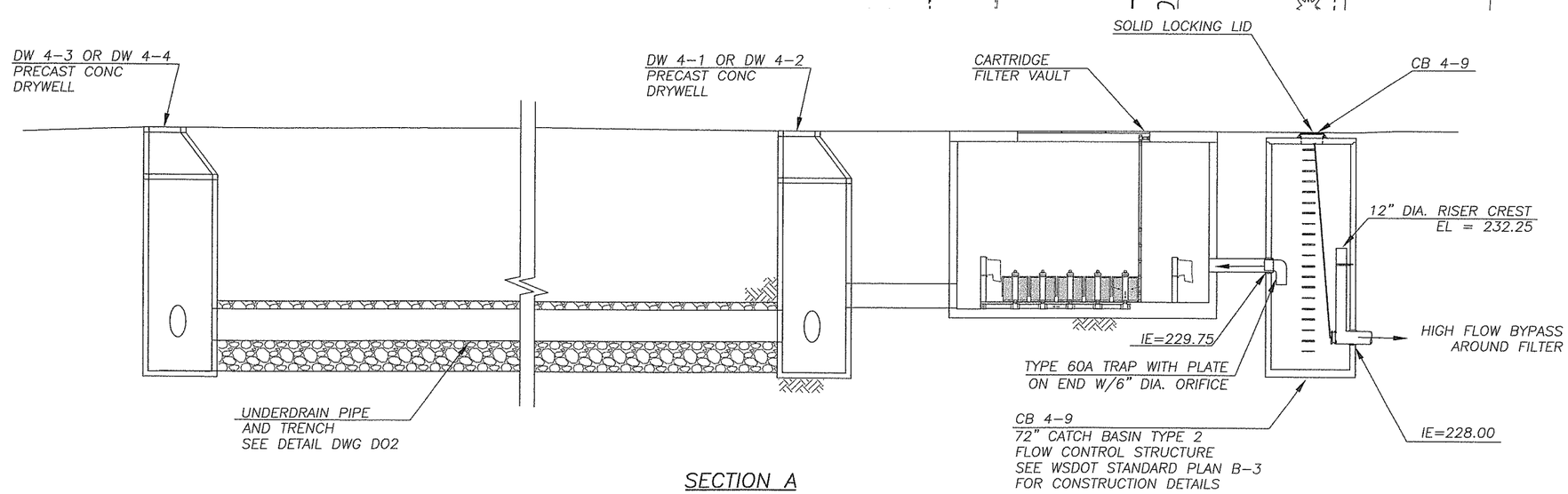

SECTION A

DESIGNED	TG
DRAWN	BK
CRP	311022
HOR.	1"=10'
VERT.	NA
DATE	1/16/04
DWG:	SWF2
SHEET 7	OF 93

CALL 48 HOURS BEFORE YOU DIG 1-800-553-4344 "It's the Law" NORTHWEST UTILITIES NOTIFICATION CENTER

STATE OF WASHINGTON BRIAN K. SEMONES 32068 REGISTERED PROFESSIONAL ENGINEER EXPIRES JANUARY 20, 2006 1-16-04

DESIGN & ENGINEERING DIVISION
DESIGN SECTION

NE 76TH ST (SR-503 TO NE 147TH AVE)
STORMWATER FACILITY #2

proud past, promising future
CLARK COUNTY WASHINGTON

SEE DWG DP7 FOR ADDITIONAL DRAINAGE INFORMATION

SCALE IN FEET
10 0 10 20

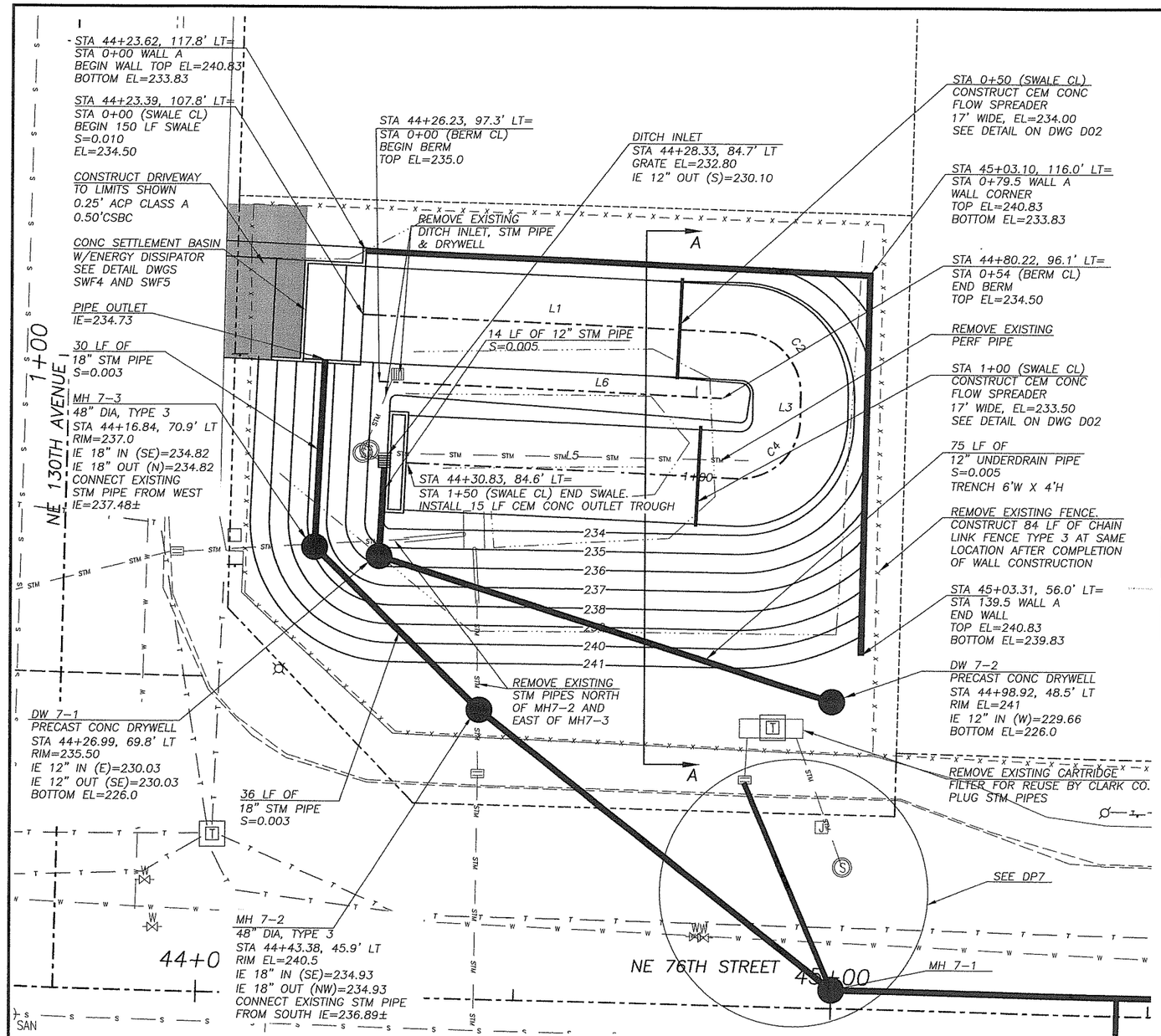

NOTES:
ALL DISTURBED AREAS OF
STORMWATER FACILITY TO BE SODDED.

BIOFILTRATION SWALE ALIGNMENT

ITEM	CONTROL POINT	STATION	NORTHING	EASTING	DIRECTION	DISTANCE	DELTA ANGLE	TANGENT	RADIUS	ARC LENGTH	CHORD LENGTH
L1	BOP	0+00	132353.83	1119212.22	S 87°20'54" E	60.00					
	PC	0+60	132351.06	1119272.16							
	RADIUS	N/A	132341.57	1119271.72			88°13'36"	9.21	9.50	14.63	13.23
C2	PI	0+69	132350.63	1119281.36							
L3	PT	0+75	132341.42	1119281.21	S 00°52'42" W	4.00					
	PC	0+79	132337.42	1119281.15							
	RADIUS	N/A	132337.57	1119271.65			91°46'24"	9.80	9.50	15.22	13.64
C4	PI	0+88	132327.62	1119281.00							
L5	PT	0+94	132328.08	1119271.21	N 87°20'54" W	52.15					
	EOP	1+46	132330.49	1119219.12							

BIOFILTRATION SWALE BERM ALIGNMENT

ITEM	CONTROL POINT	STATION	NORTHING	EASTING	DIRECTION	DISTANCE
L6	BOP	0+00	132343.26	1119214.82	S 87°20'54" E	54.00
	EOP	0+54	132340.76	1119268.76		

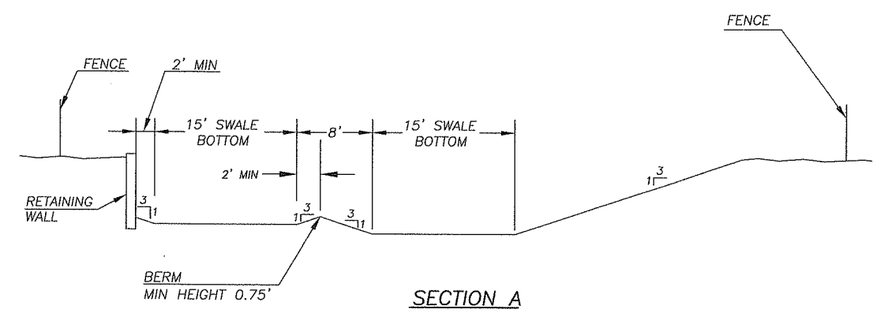

SECTION A
NTS

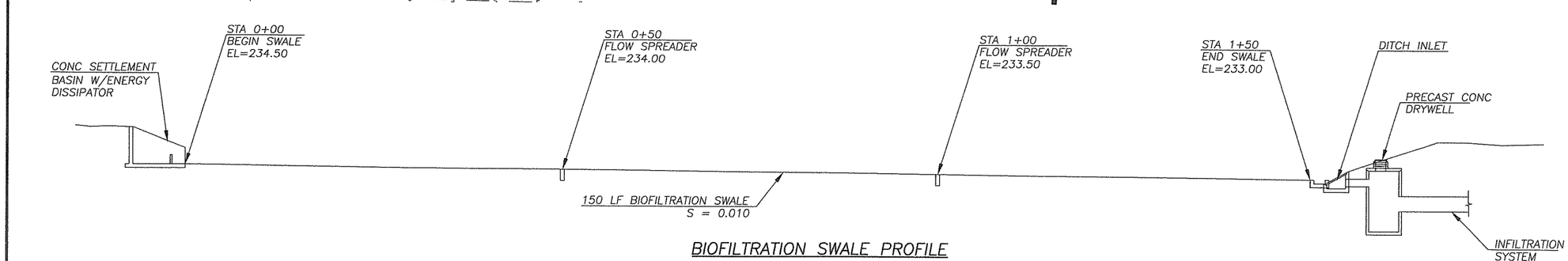

BIOFILTRATION SWALE PROFILE
NTS

DESIGNED	TG
DRAWN	BK
CRP	311022
HOR.	NA
VERT.	NA
DATE	1/16/04
DWG.	SWF3
SHEET 8	OF 93

CALL 48 HOURS BEFORE YOU DIG
1-800-553-4344
"It's the Law"
NORTHWEST UTILITIES NOTIFICATION CENTER

STATE OF WASHINGTON
BRIAN K. DRAKE
32085
REGISTERED PROFESSIONAL ENGINEER
EXPIRES: JANUARY 20, 2005
1-19-04

DESIGN & ENGINEERING DIVISION
DESIGN SECTION

NE 76TH ST (SR-503 TO NE 147TH AVE)
STORMWATER FACILITY #3

proud past, promising future
CLARK COUNTY
WASHINGTON

NOTE: ALL STATIONS AND OFFSETS ARE FROM NE 76TH STREET UNLESS NOTED OTHERWISE.

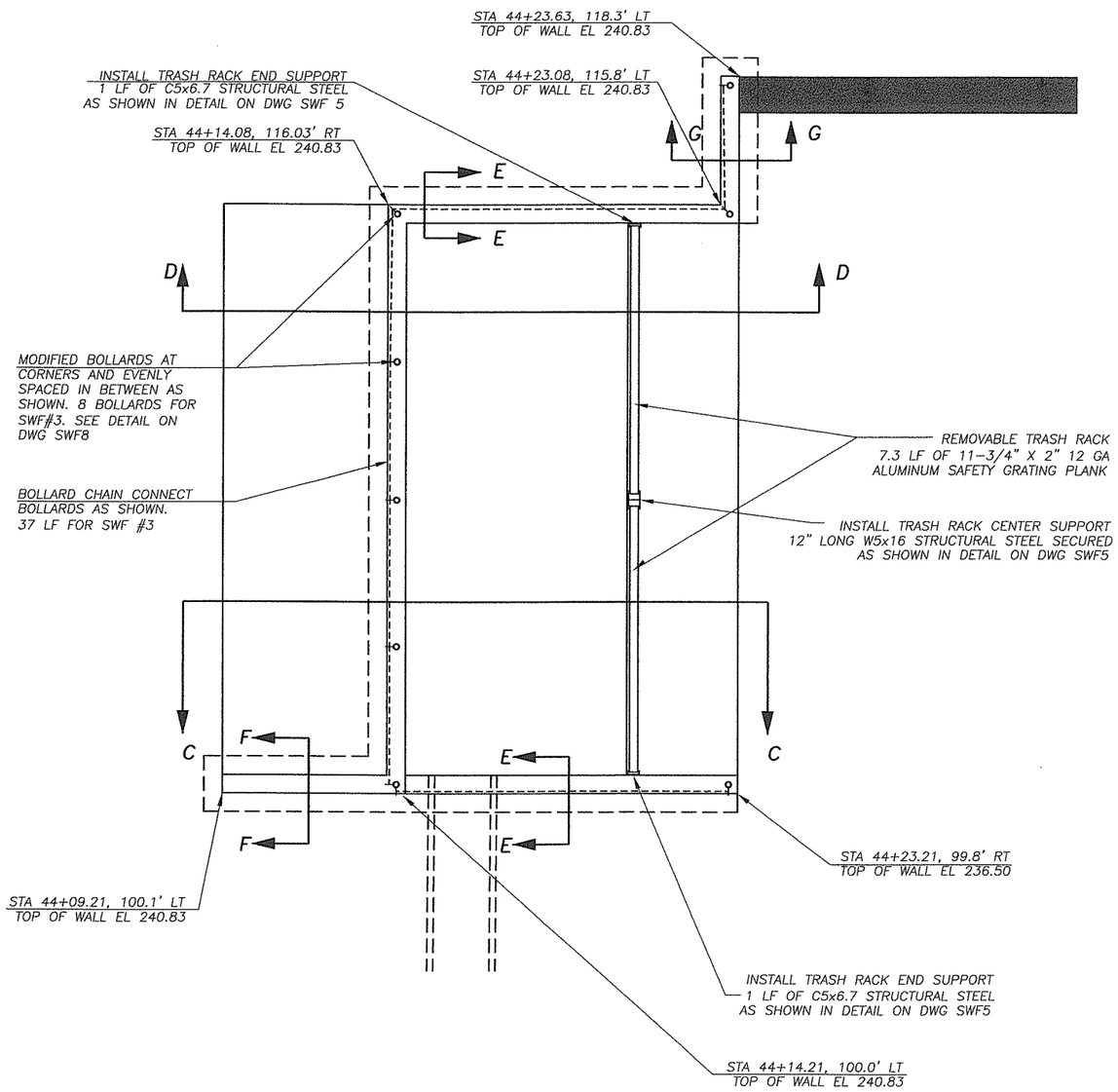

CONC SETTLEMENT BASIN
W/ENERGY DISSIPATOR DETAIL

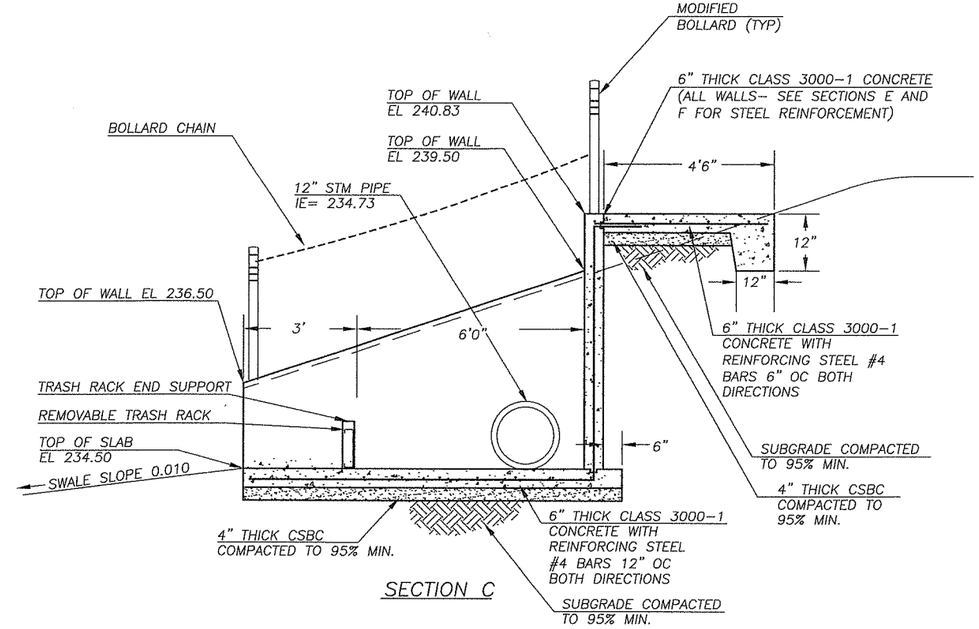

SECTION C

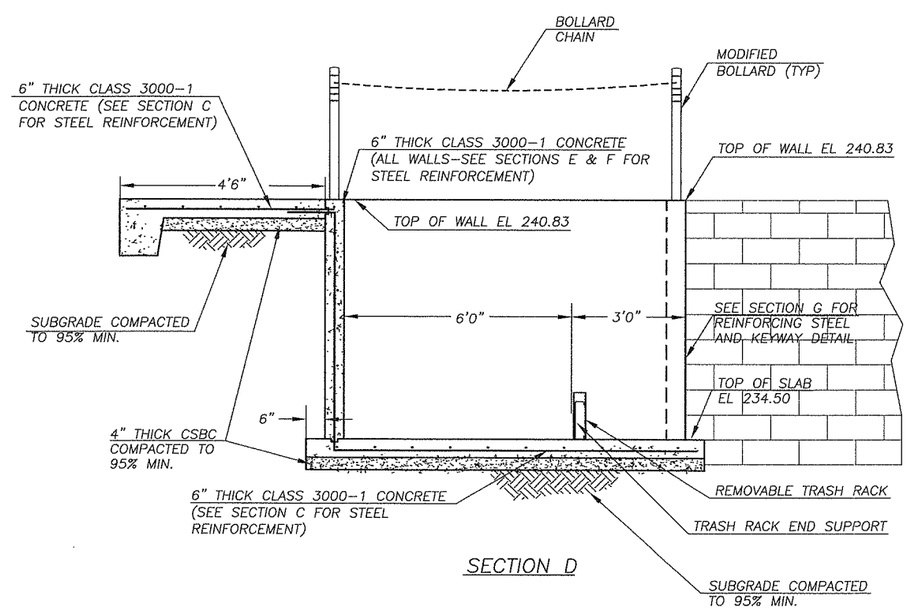

SECTION D

DESIGNED TG
DRAWN BK
CRP 311022
HOR. NA
VERT. NA
DATE 1/16/04
DWG. SWF4
SHEET 9 OF 93

CALL 48 HOURS BEFORE YOU DIG
1-800-553-4344
"It's the Law"
NORTHWEST UTILITIES NOTIFICATION CENTER

STATE OF WASHINGTON
JOHN D. BRADSHAW
23068
REGISTERED PROFESSIONAL ENGINEER
EXPIRES JANUARY 20, 2005
1-19-04

DESIGN & ENGINEERING DIVISION
DESIGN SECTION

NE 76TH ST (SR-503 TO NE 147TH AVE)
STORMWATER FACILITY #3 DETAILS

proud past, promising future
CLARK COUNTY
WASHINGTON

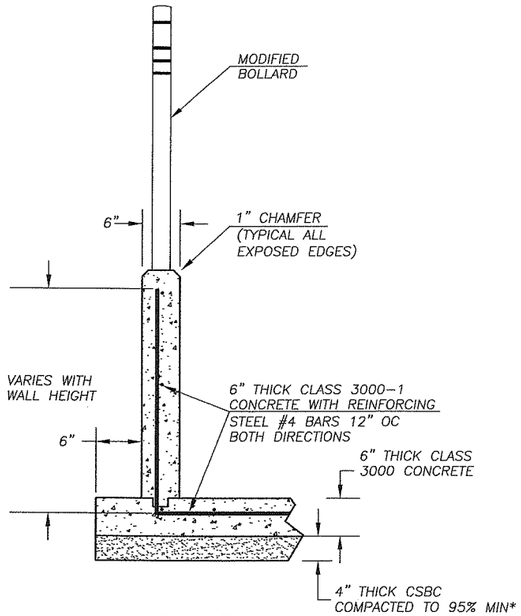

SECTION E

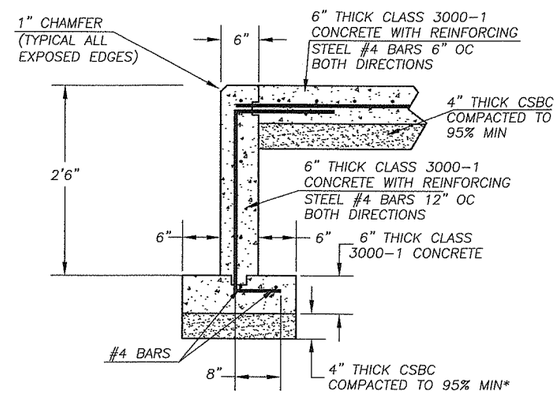

SECTION F

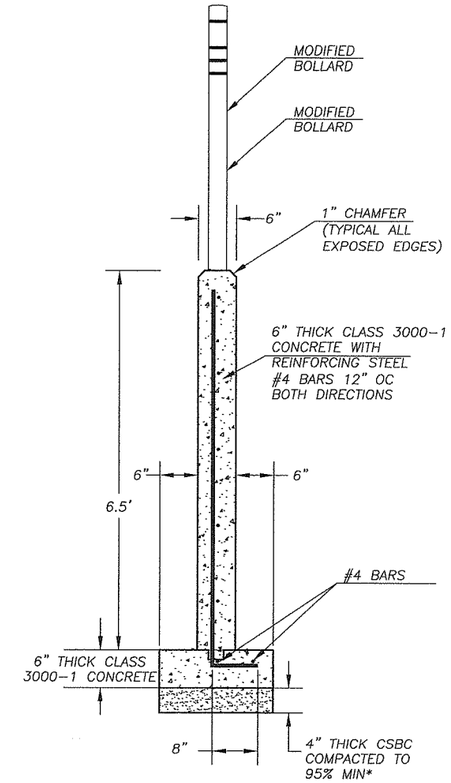

SECTION G

* SUBGRADE BELOW CSBC COMPACTED TO 95% MIN.

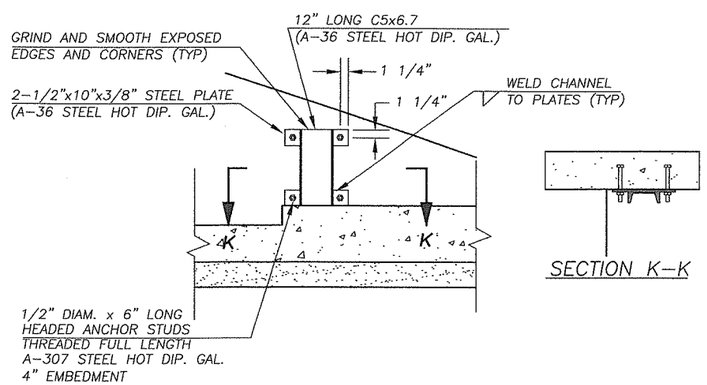

SECTION K-K

TRASH RACK END SUPPORT

1"=1'

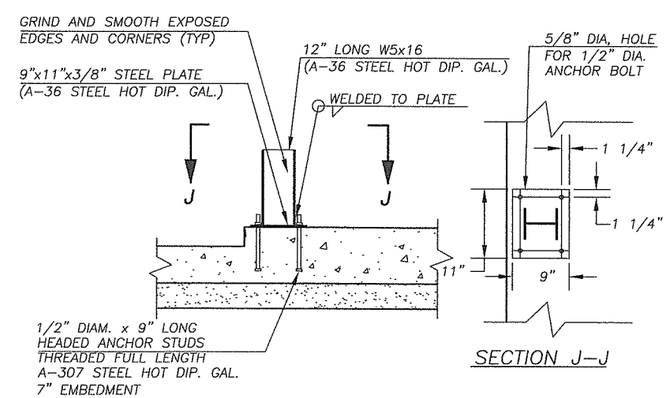

SECTION J-J

TRASH RACK CENTER SUPPORT

1"=1'

DESIGNED	TG
DRAWN	BK
CRP	311022
HOR.	NA
VERT.	NA
DATE	1/16/04
DWG:	SWF5
SHEET 10	OF 93

CALL 48 HOURS BEFORE YOU DIG 1-800-553-4344 "It's the Law" NORTHWEST UTILITIES NOTIFICATION CENTER

THOMAS D. GRANGE STATE OF WASHINGTON 32068 REGISTERED PROFESSIONAL ENGINEER EXPIRES: JANUARY 20, 2005

2-12-04

DESIGN & ENGINEERING DIVISION
DESIGN SECTION

NE 76TH ST (SR-503 TO NE 147TH AVE)
STORMWATER FACILITY #3 DETAILS

proud past, promising future

CLARK COUNTY WASHINGTON

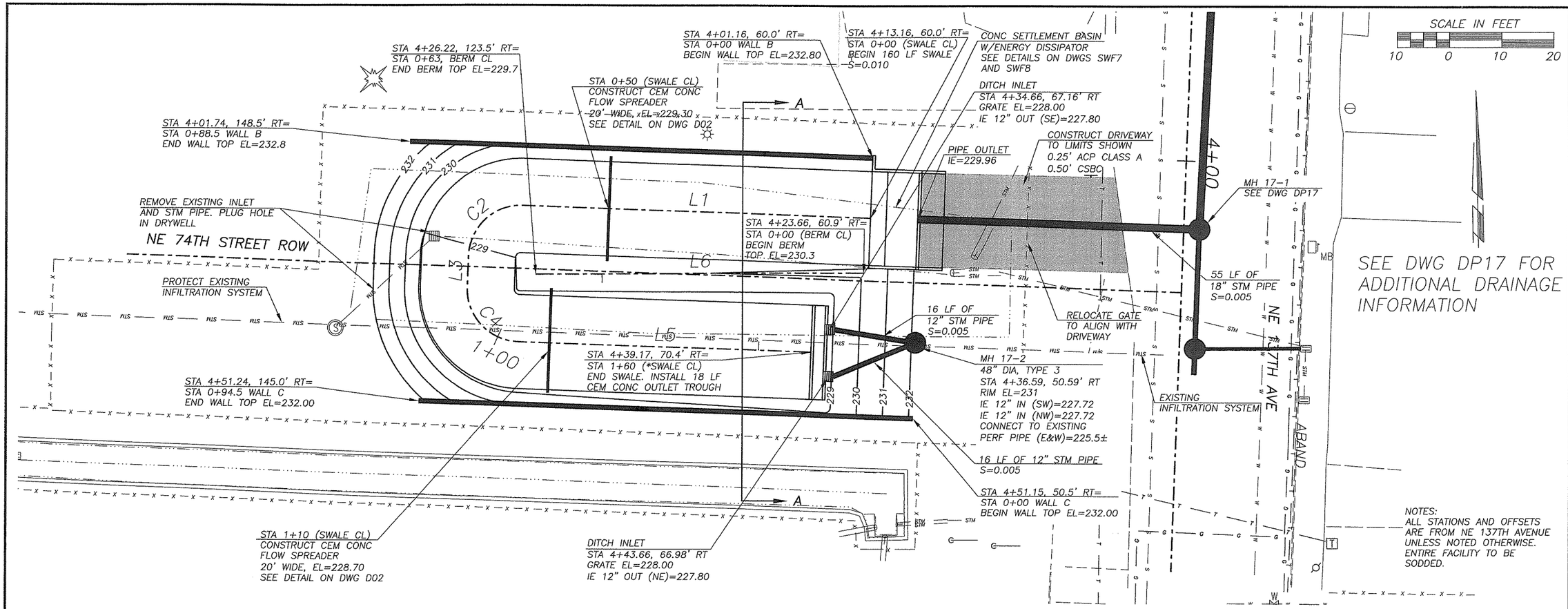

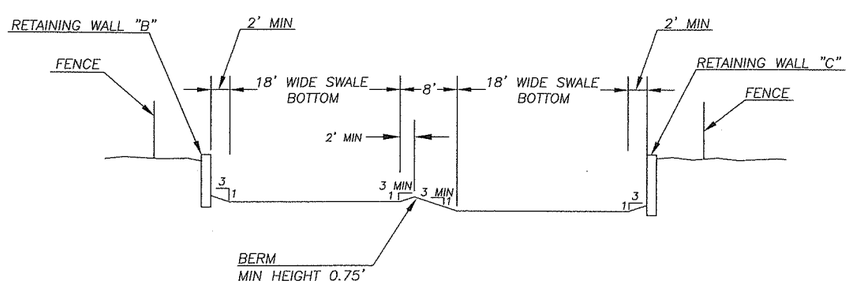

SECTION A

NTS

BIOFILTRATION SWALE ALIGNMENT

ITEM	CONTROL POINT	STATION	NORTHING	EASTING	DIRECTION	DISTANCE	DELTA ANGLE	TANGENT	RADIUS	ARC LENGTH	CHORD LENGTH
L1	BOP	0+00	131786.06	1121072.96	N 88°03'36" W	66.51					
	PC	0+67	131788.31	1121006.49							
	RADIUS	N/A	131778.31	1121006.15			89°56'42"	9.99	10.00	15.70	14.14
C2	PI	0+77	131788.65	1120996.51							
L3	PT	0+82	131778.66	1120996.16	S 01°59'42" W	6.00					
	PC	0+88	131772.66	1120995.95							
	RADIUS	N/A	131772.32	1121005.95			90°03'18"	10.01	10.00	15.72	14.15
C4	PI	0+98	131762.66	1120995.60							
L5	PT	1+04	131762.32	1121005.61	S 88°03'36" E	56.07					
	EOP	1+60	131760.42	1121061.65							

BIOFILTRATION SWALE BERM ALIGNMENT

ITEM	CONTROL POINT	STATION	NORTHING	EASTING	DIRECTION	DISTANCE
L6	BOP	0+00	131775.59	1121071.69	S 89°39'10" W	62.64
	EOP	0+63	131775.21	1121009.05		

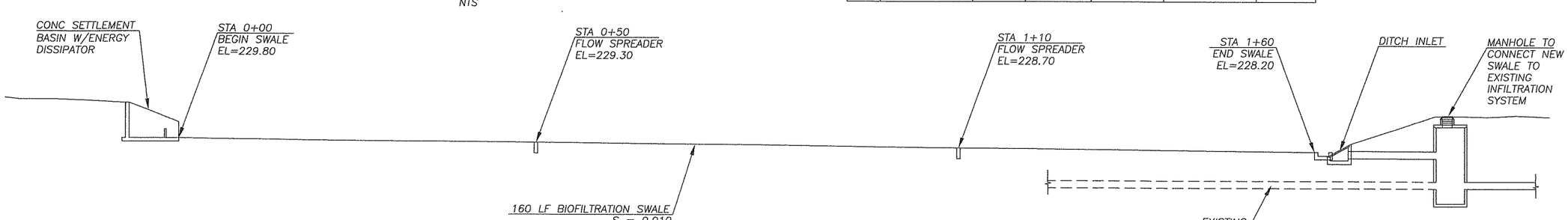

BIOFILTRATION SWALE PROFILE

NTS

DESIGNED TG
DRAWN BK
CRP 311022
HOR. NA
VERT. NA
DATE 1/16/04
DWG: SWF6
SHEET 11 OF 93

CALL 48 HOURS BEFORE YOU DIG 1-800-553-4344 "It's the Law" NORTHWEST UTILITIES NOTIFICATION CENTER

EXPIRES JANUARY 20, 2005

DESIGN & ENGINEERING DIVISION
DESIGN SECTION

NE 76TH ST (SR-503 TO NE 147TH AVE)
STORMWATER FACILITY #4

proud past, promising future
CLARK COUNTY WASHINGTON

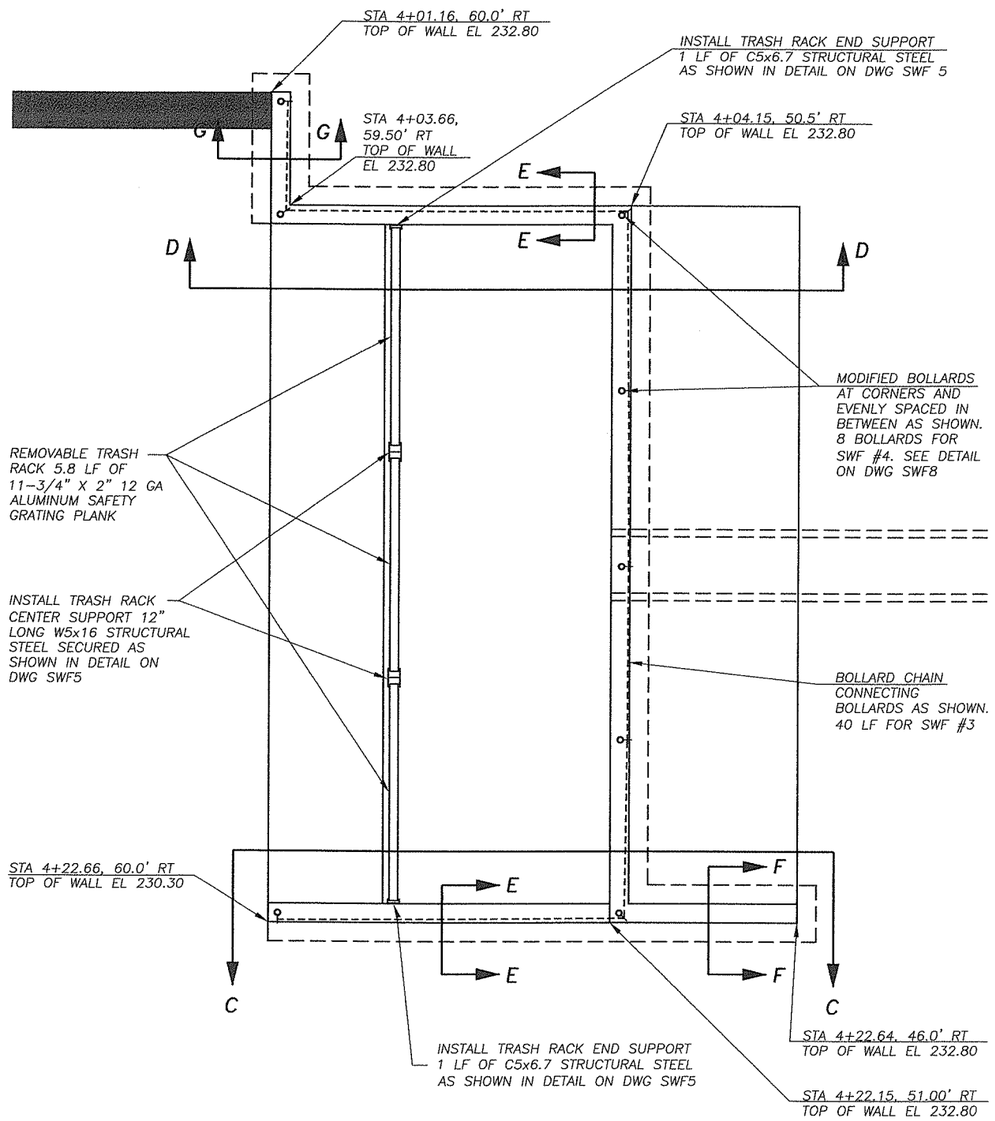

CONC SETTLEMENT BASIN
ENERGY DISSIPATOR DETAIL

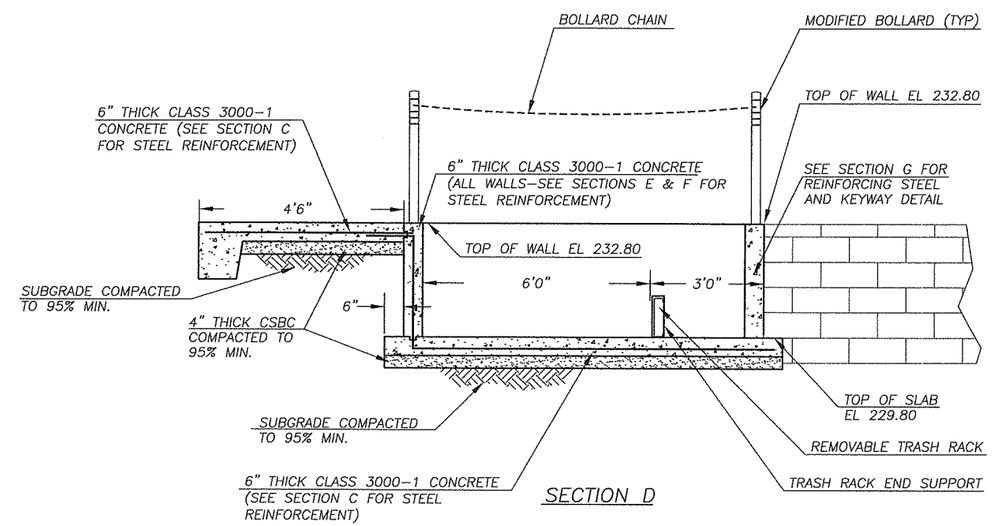

SECTION D

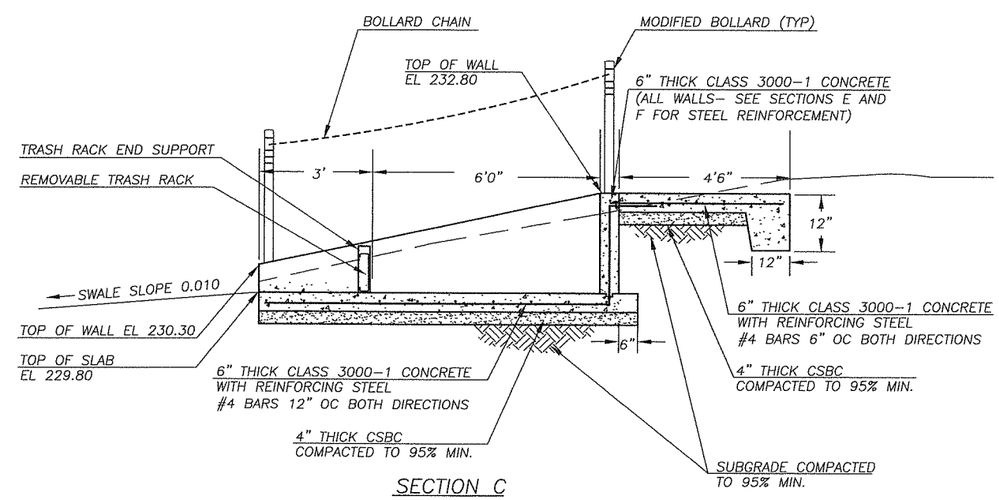

SECTION C

DESIGNED	TG
DRAWN	BK
CRP	311022
HOR.	2
VERT.	NA
DATE	1/16/04
DWG:	SWF7
SHEET 12	OF 93

CALL 48 HOURS BEFORE YOU DIG
1-800-553-4344
"It's the Law"
NORTHWEST UTILITIES NOTIFICATION CENTER

THOMAS D. GRANGE
STATE OF WASHINGTON
32059
REGISTERED PROFESSIONAL ENGINEER
EXPIRES: JANUARY 20, 2006
1-20-04

DESIGN & ENGINEERING DIVISION
DESIGN SECTION

NE 76TH ST (SR-503 TO NE 147TH AVE)
STORMWATER FACILITY #4 DETAILS

proud past, promising future
CLARK COUNTY
WASHINGTON

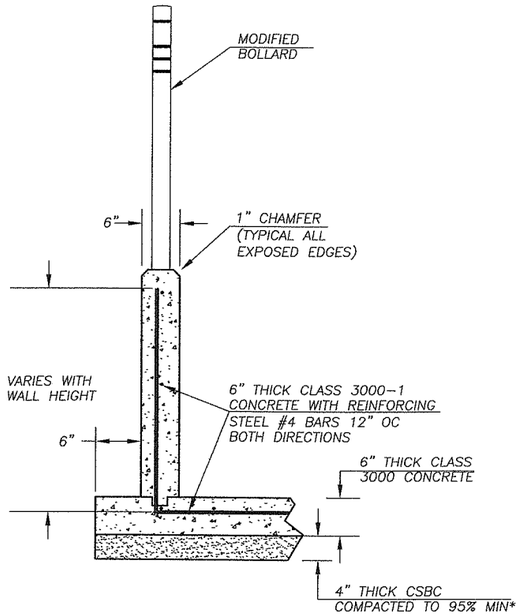

SECTION E

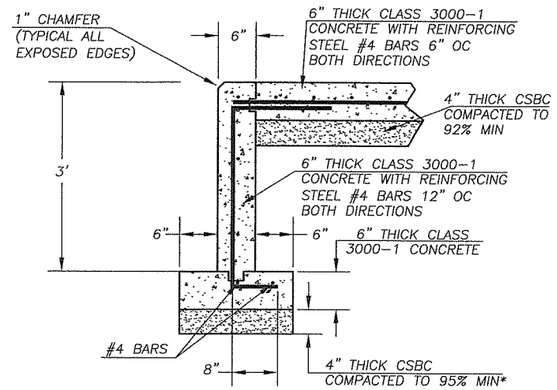

SECTION F

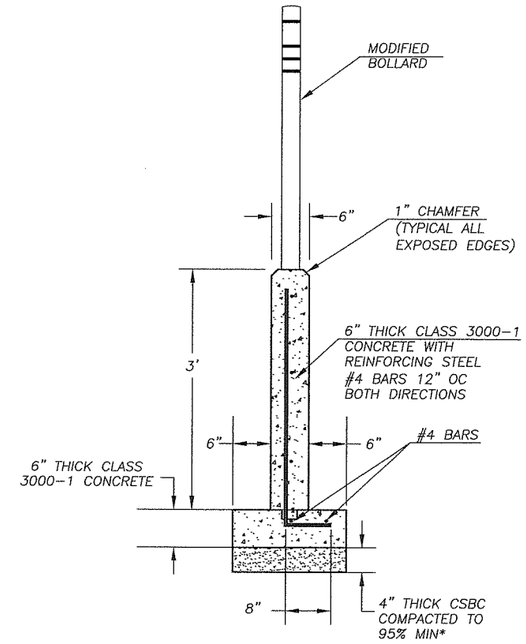

SECTION G

* SUBGRADE BELOW CSBC COMPACTED TO 95% MIN.

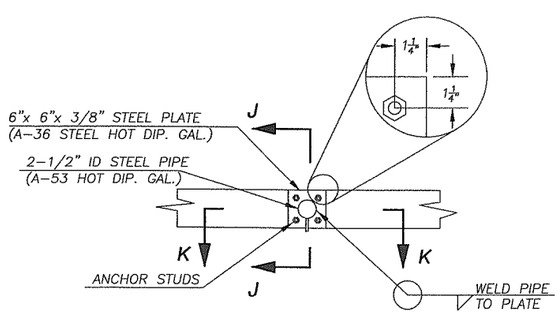

MODIFIED BOLLARD

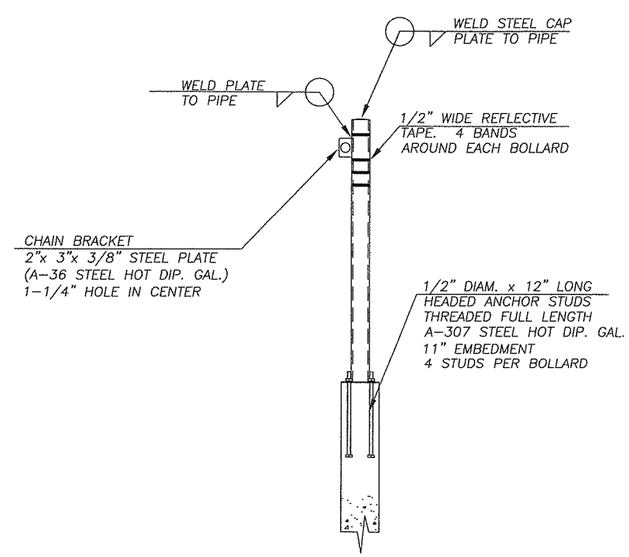

SECTION J-J

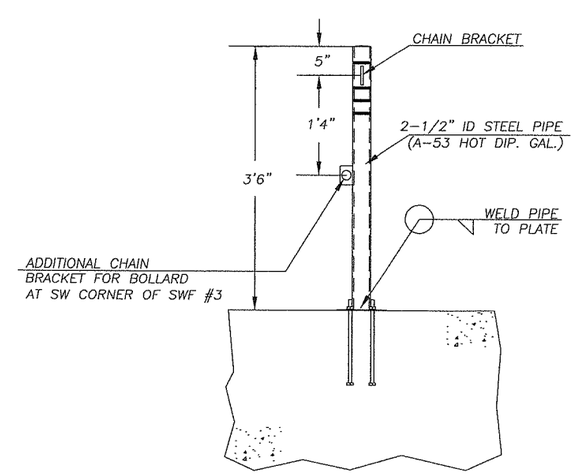

SECTION K-K

DESIGNED	TG
DRAWN	BK
CRP	311022
HOR.	NA
VERT.	NA
DATE	1/16/04
DWG.	SWF8
SHEET 13	OF 93

CALL 48 HOURS BEFORE YOU DIG 1-800-553-4344 "It's the Law" NORTHWEST UTILITIES NOTIFICATION CENTER

STEVEN D. ROBANGE STATE OF WASHINGTON 23068 REGISTERED PROFESSIONAL ENGINEER EXPIRES JANUARY 20, 2005 1-16-04

DESIGN & ENGINEERING DIVISION
DESIGN SECTION

NE 76TH ST (SR-503 TO NE 147TH AVE)
STORMWATER FACILITY #4 DETAILS

proud past, promising future
CLARK COUNTY WASHINGTON

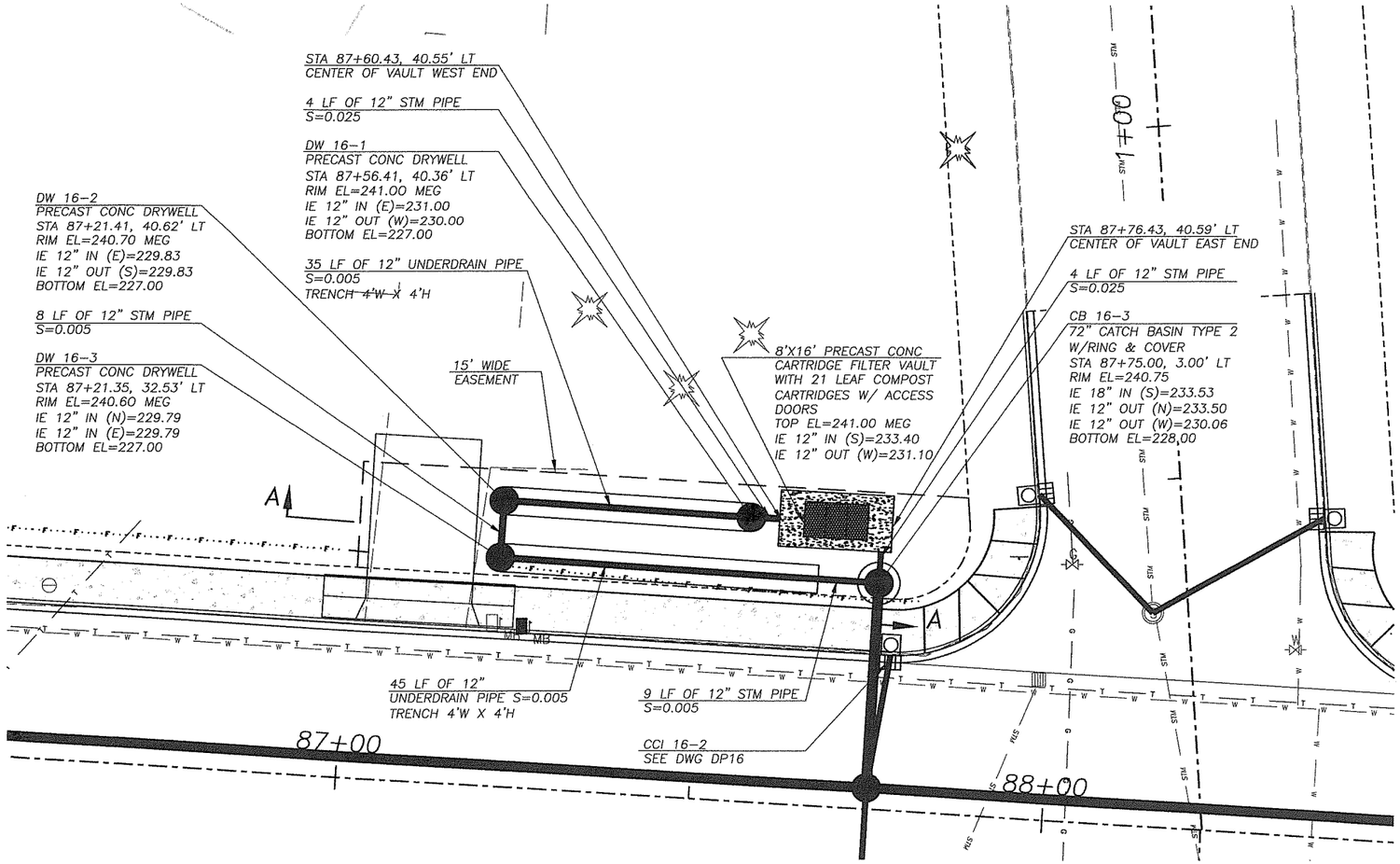

SEE DWG DP16 FOR ADDITIONAL DRAINAGE INFORMATION

SCALE IN FEET

10 0 10 20

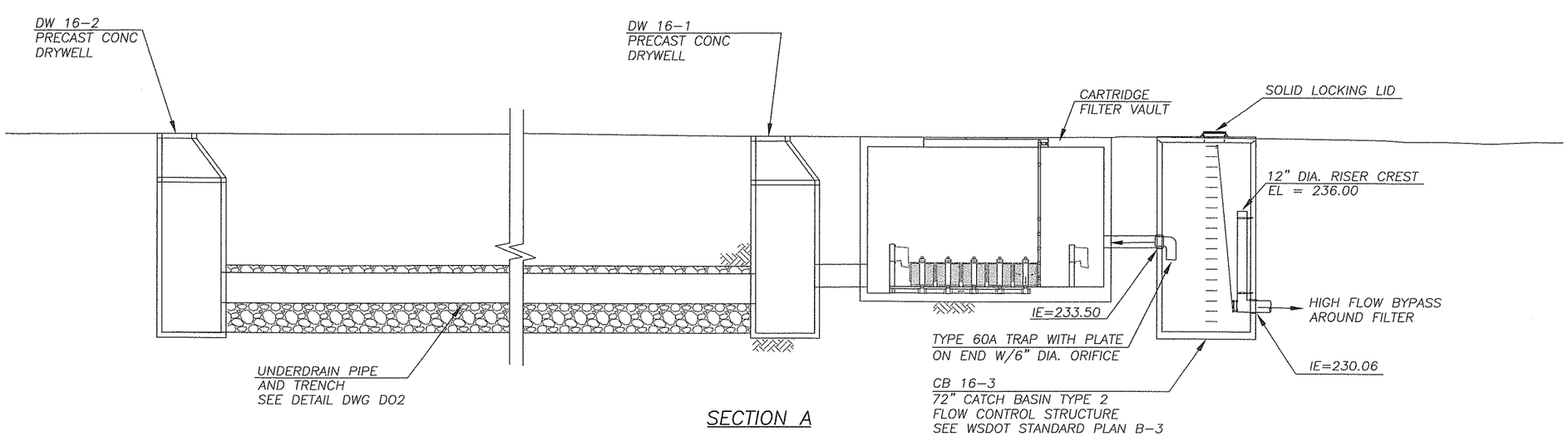

SECTION A

DESIGNED	TG
DRAWN	BK
CRP	311022
HOR.	NA
VERT.	NA
DATE	1/16/04
DWG:	SWF9
SHEET 14	OF 93

CALL 48 HOURS BEFORE YOU DIG 1-800-553-4344 "It's the Law" NORTHWEST UTILITIES NOTIFICATION CENTER

THOMAS W. GRANGE STATE OF WASHINGTON 32098 REGISTERED PROFESSIONAL ENGINEER EXPIRES: JANUARY 20, 2005

7-19-04

DESIGN & ENGINEERING DIVISION
DESIGN SECTION

NE 76TH ST (SR-503 TO NE 147TH AVE)
STORMWATER FACILITY #5

proud past, promising future

CLARK COUNTY WASHINGTON

GENERAL NOTES

8' X 16' PRECAST STORMFILTER™ DATA

DESIGN WATER QUALITY FLOW (cfs)			0.43
PEAK FLOW (cfs)			1.31
RETURN PERIOD OF PEAK FLOW (yrs)			100
# OF CARTRIDGES REQUIRED			13
MEDIA TYPE			COMPOST
(In-Out)=2.3' Min.	I.E.	MATERIAL	DIAMETER
INLET PIPE #1	217.50		12"
INLET PIPE #2			
OUTLET PIPE	215.20		12"

RIM ELEVATION(S): 1 = 222.83, 2 = 222.83, 3 = 223.00, 4 = 223.00

DOOR OPENING DIRECTION: (FACING DOWNSTREAM – SEE FIGURE ABOVE) EXAMPLE: '2 TO 1' OR '1 TO 2.'

ADJUSTABLE LID		YES/NO
LADDER		YES/NO
ANTI-FLOATATION BALLAST (USE N/A IF NOT REQUIRED)	WIDTH	HEIGHT
	N/A	N/A

NOTES/SPECIAL REQUIREMENTS: SWF #1

8' X 16' PRECAST STORMFILTER™ DATA

DESIGN WATER QUALITY FLOW (cfs)			0.86
PEAK FLOW (cfs)			2.62
RETURN PERIOD OF PEAK FLOW (yrs)			100
# OF CARTRIDGES REQUIRED			26
MEDIA TYPE			COMPOST
(In-Out)=2.3' Min.	I.E.	MATERIAL	DIAMETER
INLET PIPE #1	229.73		12"
INLET PIPE #2			
OUTLET PIPE	227.43		12"

NOTES/SPECIAL REQUIREMENTS: SWF #2

RIM ELEVATION(S): 1 = 239.00, 2 = 239.00, 3 = 239.00, 4 = 239.00

DOOR OPENING DIRECTION: (FACING DOWNSTREAM – SEE FIGURE ABOVE) EXAMPLE: '2 TO 1' OR '1 TO 2.'

ADJUSTABLE LID		YES/NO
LADDER		YES/NO
ANTI-FLOATATION BALLAST (USE N/A IF NOT REQUIRED)	WIDTH	HEIGHT
	N/A	N/A

8' X 16' PRECAST STORMFILTER™ DATA

DESIGN WATER QUALITY FLOW (cfs)			0.70
PEAK FLOW (cfs)			2.13
RETURN PERIOD OF PEAK FLOW (yrs)			100
# OF CARTRIDGES REQUIRED			21
MEDIA TYPE			COMPOST
(In-Out)=2.3' Min.	I.E.	MATERIAL	DIAMETER
INLET PIPE #1	233.40		12"
INLET PIPE #2			
OUTLET PIPE	231.10		12"

NOTES/SPECIAL REQUIREMENTS: SWF #5

RIM ELEVATION(S): 1 = 241.00, 2 = 241.00, 3 = 241.00, 4 = 241.00

DOOR OPENING DIRECTION: (FACING DOWNSTREAM – SEE FIGURE ABOVE) EXAMPLE: '2 TO 1' OR '1 TO 2.'

ADJUSTABLE LID		YES/NO
LADDER		YES/NO
ANTI-FLOATATION BALLAST (USE N/A IF NOT REQUIRED)	WIDTH	HEIGHT
	N/A	N/A

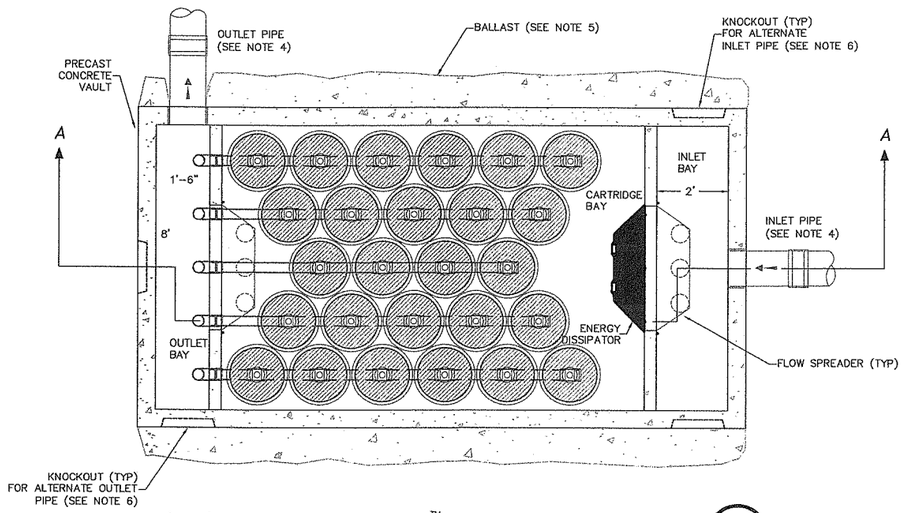

8'x16' PRECAST STORMFILTER™– PLAN VIEW (1/1)

SCALE: N.T.S.

STORM FILTER VAULT FOR SWF#1 SHALL HAVE MANHOLE TYPE ACCESS. STORM FILTER VAULTS FOR SWF#2 AND SWF#5 SHALL HAVE ACCESS DOORS

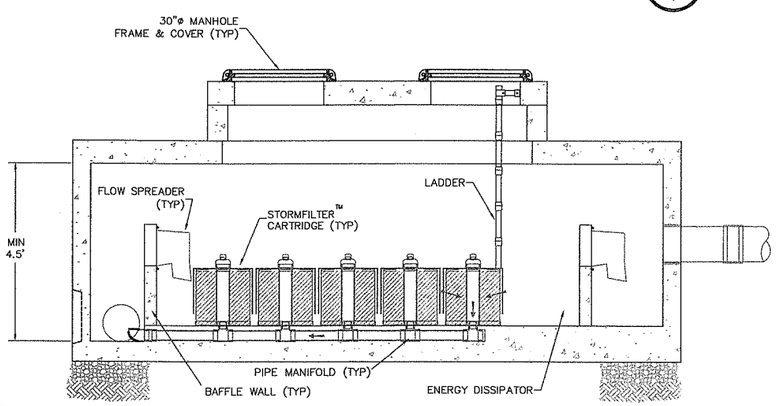

8'x16' PRECAST STORMFILTER™– SECTION VIEW (A–A / 1)

SCALE: N.T.S.

The STORMWATER MANAGEMENT *StormFilter*® U.S. PATENT No. 5,322,629, No. 5,624,576, No. 5,707,527 AND OTHER U.S. AND FOREIGN PATENTS PENDING

SHEET	DESIGNED BY: JHL	CHECKED BY:	CHECK DATE:
1/1	DRAWN BY: MJG	APPROVED BY:	APPR. DATE:

DATE	BY	REVISION	QCD	APPR.
04/18/01	ARG	DRAWING UPDATE		

1

8'X16' PRECAST STORMFILTER™ PLAN AND SECTION VIEW STANDARD DETAIL

SCALE: AS SHOWN | PROJECT NO. | DRAWING FILE NAME: 816.DWG

STORMWATER MANAGEMENT INC.

LAST EDIT: ARG PLOT DATE: 04/18/01

DESIGNED TG
DRAWN BK
CRP 311022
HOR. NA
VERT. NA
DATE 1/16/04
DWG: SWF10
SHEET 15 OF 93

CALL 48 HOURS BEFORE YOU DIG 1-800-553-4344 "It's the Law" NORTHWEST UTILITIES NOTIFICATION CENTER

STATE OF WASHINGTON LYLE D. GERAGE 32008 REGISTERED PROFESSIONAL ENGINEER EXPIRES JANUARY 20, 2005

DESIGN & ENGINEERING DIVISION
DESIGN SECTION

NE 76TH ST (SR-503 TO NE 147TH AVE)
STORMWATER FILTER DETAILS

proud past, promising future
CLARK COUNTY WASHINGTON

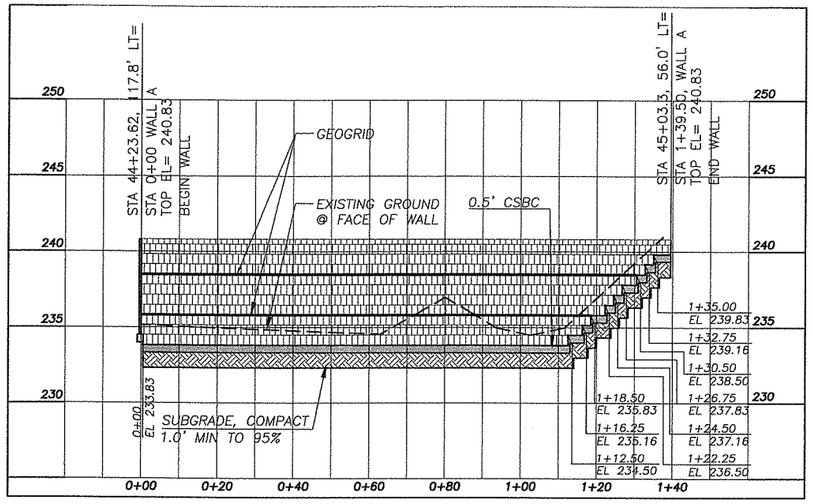

WALL A PROFILE

WALL A GEOGRID SCHEDULE

STATION RANGE	ELEVATION	LENGTH
0+00 TO 1+18	235.83	4.5'
0+00 TO 1+30	238.50	5.5'

NOTE: BATTER FOR ALL WALLS 8.8°

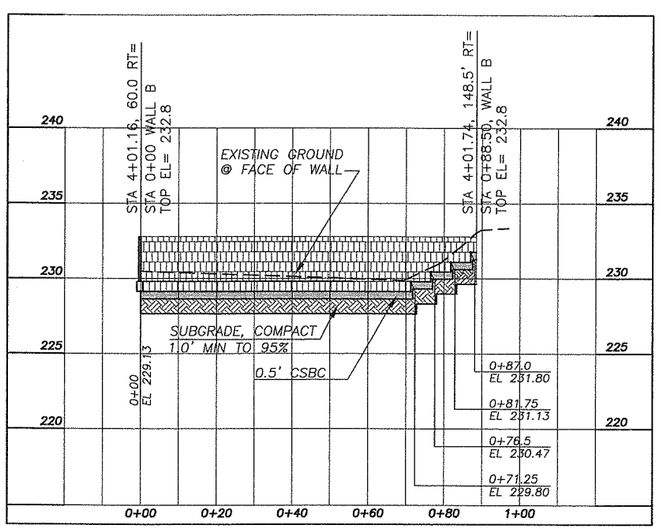

WALL B PROFILE

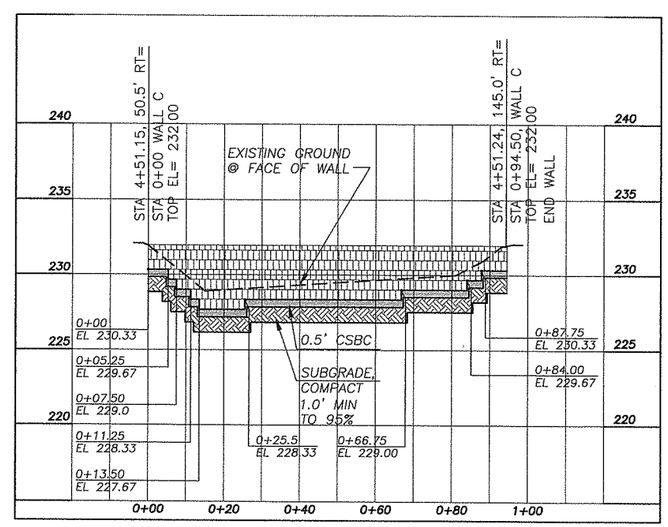

WALL C PROFILE

DESIGNED TG
DRAWN BK
CRP 311022
HOR. NA
VERT. NA
DATE 1/16/04
DWG: SWF11
SHEET 16 OF 93

CALL 48 HOURS BEFORE YOU DIG
1-800-553-4344
"It's the Law"
NORTHWEST UTILITIES NOTIFICATION CENTER

STATE OF WASHINGTON
LANCE D. BOGANES
32648
REGISTERED PROFESSIONAL ENGINEER
EXPIRES JANUARY 20, 2005
1-16-04

DESIGN & ENGINEERING DIVISION
DESIGN SECTION

NE 76TH ST (SR-503 TO NE 147TH AVE)
STORMWATER FACILITY WALLS

proud past, promising future
CLARK COUNTY
WASHINGTON

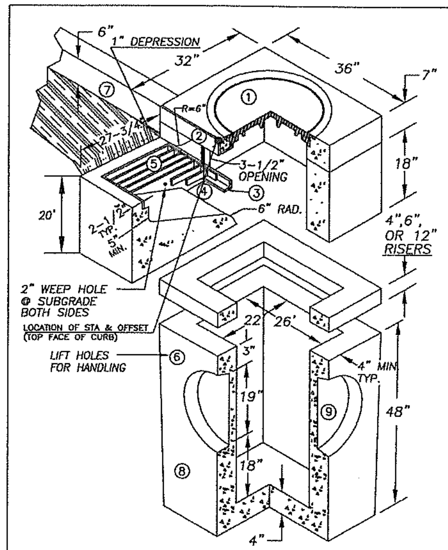

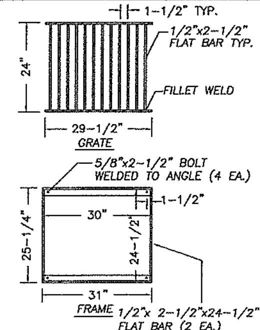

1. 24" x 3-1/2" CAST IRON LOCKING FRAME & COVER
2. 2-1/2"x3-1/2"x1/4"x 35 7/8" GALVANIZED ANGLE IRON
3. 2-1/2"x2-1/2"x3/8" FRAME GALVANIZED ANGLE IRON
4. 2 EA. #4 TRASH BARS @ 8" O.C.
5. 1/2"x2-1/2" FLAT BAR GALVANIZED GRATE
6. 2 EA. BASE UNIT LIFT HOLES
7. 6" CURB AND 12" GUTTERS
8. STANDARD TYPE 1 BASE UNIT
9. PIPE KNOCKOUTS ALL FOUR SIDES.

NOTES

1. COMBINATION CURB INLET TO BE CONSTRUCTED IN ACCORDANCE WITH ASTM C478 & C890 UNLESS SHOWN ON PLANS OR NOTED IN STANDARD SPECIFICATIONS.
2. REINFORCING FOR INLET UNIT, 3 EA. #4 HORZONTAL BARS; REINFORCING FOR TOP UNIT, 2 EA. #3 HORZONTAL BARS; REINFORCING FOR INLET SLOPED BASE, 4x4 MESH.
3. ALL REBAR TO MEET ASTM A615 GRADE 60.
4. AS AN ACCEPTABLE ALTERNATIVE TO REBAR, WELDED WIRE FABRIC HAVING A MIN. AREA OF 0.12 SQAURE INCHES PER FOOT MAY BE USED. WELDED WIRE FABRIC SHALL COMPLY TO ASTM A497. WIRE FABRIC SHALL NOT BE PLACED IN KNOCKOUTS.
5. ALL REINFORCED CAST-IN-PLACE CONCRETE SHALL BE CLASS 4,000.
6 PRECAST BASES SHALL BE FURNISHED WITH CUTOUTS OR KNOCKOUTS. KNOCKOUTS SHALL HAVE A WALL THICKNESS OF 2" MIN. ALL PIPE SHALL BE INSTALLED IN FACTORY PROVIDED KNOCKOUTS. UNUSED KNOCKOUTS NEED NOT BE GROUTED IF WALL IS LEFT INTACT.
7. KNOCKOUTS OR CUTOUT HOLE SIZE IS EQUAL TO PIPE OUTER DIAM. PLUS INLET WALL THICKNESS.
8. ROUND KNOCKOUTS MAY BE ON ALL 4 SIDES WITH MAX. DIAM. OF 17".
9. THE MAX. DEPTH FROM THE FINISHED GRADE TO THE PIPE INVERT IS 5'-0".
10. ANY PROTUDING ENDS OF PIPES SHALL BE TRIMMED FLUSH WITH THE INSIDE WALLS AND GROUTED TO THE SATISFACTION OF ENGINEER.
11. GRATE TO HAVE 1" DEPRESSION AT GUTTER INLET WITH GUTTER TO BE TAPERED DOWN TO INLET.
12. INSTALL REMOVABLE APWA TYPE 60A TRAP OR EQUAL, SEE STD. PLAN D2.1.
13. CONTRACTOR SHALL HAVE THE OPTION OF FURNISHING PRECAST OR CAST-IN-PLACE INLET STRUCTURES, UNLESS SPECIFIED.

NO.	REVISIONS	DATE	BY

DWG: D3-0.DWG

Department of Public Works
CLARK COUNTY WASHINGTON
proud past, promising future

CONCRETE COMBINATION CURB INLET
APPROVED
COUNTY ENGINEER — DATE
STANDARD D3.0 PLAN No.
DESIGNED SCH
DRAWN SCH
DATE 09/09/02

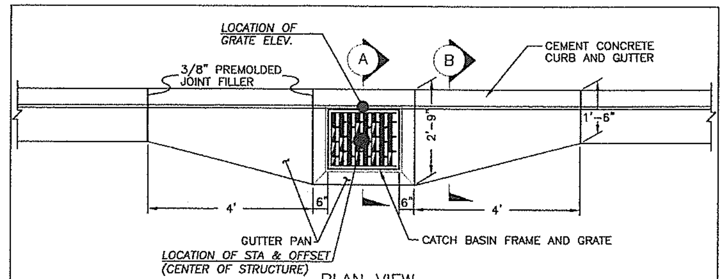

PLAN VIEW
CATCH BASIN GUTTER PAN

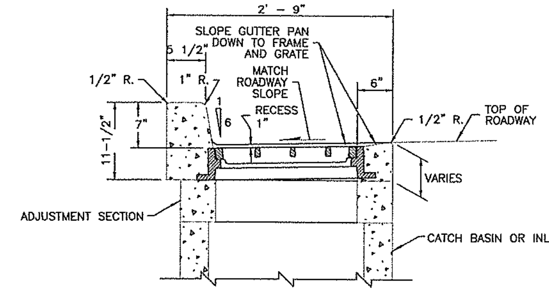

SECTION (A)

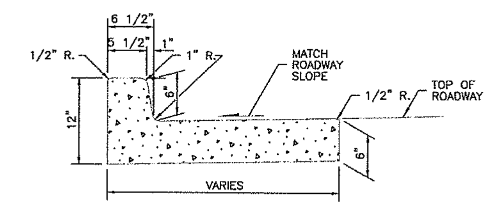

SECTION (B)

NO.	REVISIONS	DATE	BY

DWG: D4-0_1.DWG

Department of Public Works
CLARK COUNTY WASHINGTON
proud past, promising future

CATCH BASIN GUTTER PAN
APPROVED
COUNTY ENGINEER — DATE
STANDARD D4-1 PLAN No.
DESIGNED SCH
DRAWN SCH
DATE 07/01/03

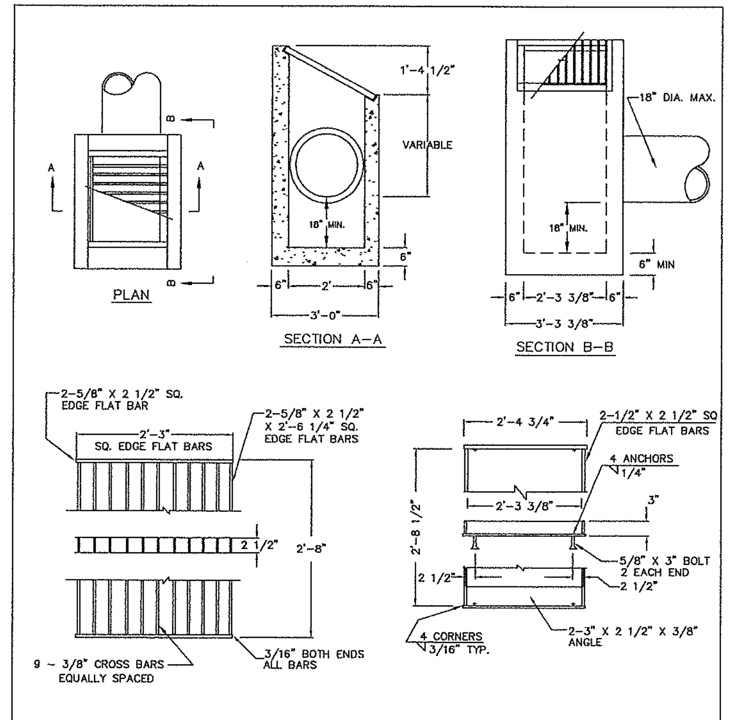

NOTES:

1. DITCH INLET CONSTRUCTION IN ACCORDANCE WITH ASTM C-478
2. CATCH BASIN, FRAME, AND GRATES SHALL BE FLAT BAR STEEL OR APPROVED EQUAL.
3. INSIDE FRAME DIMENSIONS: 2'-3 3/8"x 2'-8 1/2"".
4. 3/8" CROSS BARS SHALL BE FLUSH WITH THE GRATE SURFACE AND MAY BE FILLET WELDED, RESISTANCE WELDED OR ELECTROFORGED TO BEARING BARS.

NO.	REVISIONS	DATE	BY

DWG: D6.DWG

Department of Public Works
CLARK COUNTY WASHINGTON
proud past, promising future

DITCH INLET
APPROVED
COUNTY ENGINEER — DATE
STANDARD D6 PLAN No.
DESIGNED SCH
DRAWN SCH
DATE 09/17/02

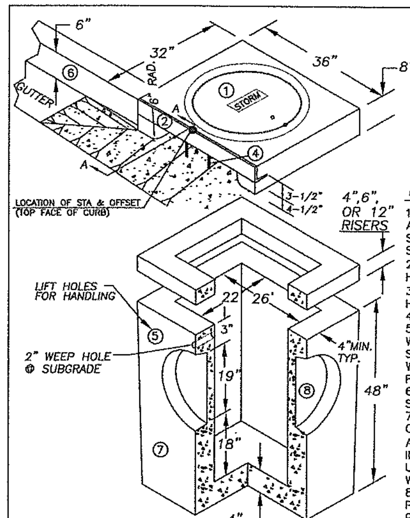

TYPE 1 CURB INLET
NTS

1. 24" CAST IRON LOCKING FRAME & COVER
2. 2 1/2"x3 1/2"x1/4"x 35 7/8" GALVANIZED ANGLE IRON
3. 2"x2 1/2"x1/4"x33" GALVANIZED ANGLE IRON
4. 2 EA. #4 TRASH BARS @ 9" O.C.
5. 2 EA. BASE UNIT LIFT HOLES
6. 6" CURB AND 12" GUTTERS
7. STANDARD TYPE 1 BASE UNIT
8. PIPE KNOCKOUTS ALL FOUR SIDES.

NOTES:

1. CURB INLET TO BE CONSTRUCTED IN ACCORDANCE WITH ASTM C478 & C890 UNLESS SHOWN ON PLANS OR NOTED IN STANDARD SPECIFICATIONS.
2. REINFORCING FOR INLET UNIT, 3 EA. #4 HORZONTAL BARS.
3. REINFORCING FOR TOP UNIT, 2 EA. #3 HORZONTAL BARS.
4. ALL REBAR TO MEET ASTM A615 GRADE 60.
5. AS AN ACCEPTABLE ALTERNATIVE TO REBAR, WELDED WIRE FABRIC HAVING A MIN. AREA OF 0.12 SQAURE INCHES PER FOOT MAY BE USED. WELDED WIRE FABRIC SHALL COMPLY TO ASTM A497. WIRE FABRIC SHALL NOT BE PLACED IN KNOCKOUTS.
6. ALL REINFORCED CAST-IN-PLACE CONCRETE SHALL BE CLASS 4,000.
7. PRECAST BASES SHALL BE FURNISHED WITH CUTOUTS OR KNOCKOUTS. KNOCKOUTS SHALL HAVE A WALL THICKNESS OF 2" MIN. ALL PIPE SHALL BE INSTALLED IN FACTORY PROVIDED KNOCKOUTS. UNUSED KNOCKOUTS NEED NOT BE GROUTED IF WALL IS LEFT INTACT.
8. KNOCKOUTS OR CUTOUT HOLE SIZE IS EQUAL TO PIPE OUTER DIAM. PLUS INLET WALL THICKNESS.
9. ROUND KNOCKOUTS MAY BE ON ALL 4 SIDES WITH MAX. DIAM. OF 17".
10. THE MAX. DEPTH FROM THE FINISHED GRADE TO THE PIPE INVERT IS 5'-0".
11. ANY PROTUDING ENDS OF PIPES SHALL BE TRIMMED FLUSH WITH THE INSIDE WALLS AND GROUTED TO THE SATISFACTION OF ENGINEER.
12. GUTTER IS TAPERED DOWN TO INLET.
13. INSTALL REMOVABLE APWA TYPE 60A TRAP OR EQUAL, SEE STD. PLAN D2.1.
14. CONTRACTOR SHALL HAVE THE OPTION OF FURNISHING PRECAST OR CAST-IN-PLACE INLET STRUCTURES, UNLESS SPECIFIED.

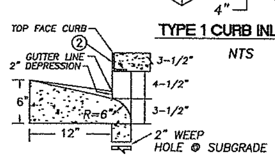

SECTION A-A

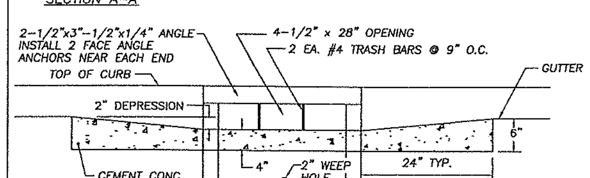

FRONT VIEW

NO.	REVISIONS	DATE	BY

DWG: D2-0.DWG

Department of Public Works
CLARK COUNTY WASHINGTON
proud past, promising future

CONCRETE CURB INLET
APPROVED
COUNTY ENGINEER — DATE
STANDARD D2.0 PLAN No.
DESIGNED SCH
DRAWN SCH
DATE 09/09/02

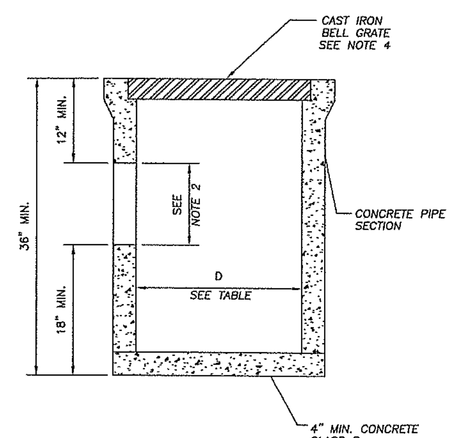

AREA INLET APPROVED FOR USE IN PRIVATE STORM DRAIN SYSTEMS ONLY

1. AREA INLETS TO BE CONSTRUCTED FROM CONCRETE PIPE, IN ACCORDANCE WITH ASTM C 14 UNLESS OTHER WISE SHOWN ON THE PLANS OR NOTED IN THE STANDARD SPECIFICATIONS.
2. CUTOUT HOLE SIZE IS EQUAL TO THE OUTLET PIPE OUTSIDE DIAMETER PLUS AREA INLET WALL THICKNESS. INSTALL TYPE 60A TRAP OR APPROVED EQUAL.
3. CONNECTION TO OUTLET PIPE TO BE MORTARED AND MADE FLUSH WITH INSIDE OF THE AREA INLET WALL.
4. CAST IRON BELL GRATE SHALL MEET THE STRENGH REQUIREMENTS OF FEDERAL SPECIFICATIONS RR-F-621D. THE GRATE SHALL HAVE SLOTS (HOLES) THAT CONSTITUTE 50% OPEN AREA FOR DRAINAGE. INLET BELL SURFACE SHALL BE FINISHED TO ASSURE NON-ROCKING FIT WITH ANY COVER POSITION.
4. AREA INLET TO BE USED FOR PRIVATE STORM SYSTEMS ONLY.

TABLE 1

OUTLET PIPE DIA. ø	INLET DIA. ø
6"	12"
8"	18"
12"	24"

NO.	REVISIONS	DATE	BY

DWG: D5.DWG

Department of Public Works
CLARK COUNTY WASHINGTON
proud past, promising future

STANDARD AREA INLET PRIVATE
APPROVED
COUNTY ENGINEER — DATE
STANDARD D5 PLAN No.
DESIGNED SCH
DRAWN SCH
DATE 09/17/02

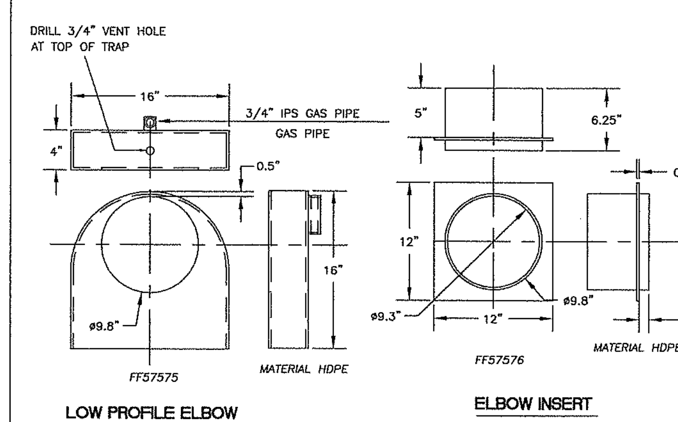

LOW PROFILE ELBOW
NTS

ELBOW INSERT
NTS

ZYMARK BRAND OR EQUIVALENT

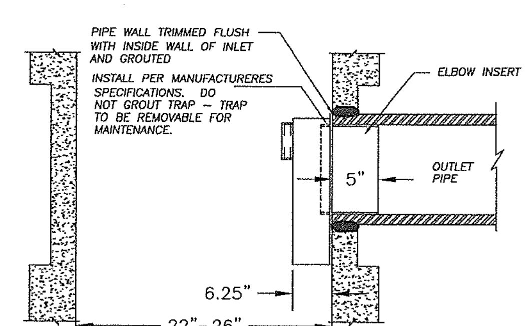

NO.	REVISIONS	DATE	BY

DWG: D2-1.DWG

Department of Public Works
CLARK COUNTY WASHINGTON
proud past, promising future

LOW PROFILE DEBRIS TRAP
APPROVED
COUNTY ENGINEER — DATE
STANDARD D2.1 PLAN No.
DESIGNED SCH
DRAWN SCH
DATE 09/23/02

DESIGNED	BAK
DRAWN	BAK
CRP	311022
HOR.	NA
VERT.	NA
DATE	1/16/04
DWG:	D01
SHEET 17	OF 93

CALL 48 HOURS BEFORE YOU DIG
1-800-553-4344
"It's the Law"
NORTHWEST UTILITIES NOTIFICATION CENTER

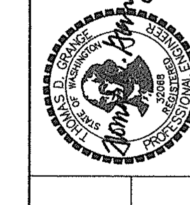

DESIGN & ENGINEERING DIVISION
DESIGN SECTION

NE 76TH ST (SR-503 TO NE 147TH AVE)
DRAINAGE DETAILS

CLARK COUNTY WASHINGTON
proud past, promising future

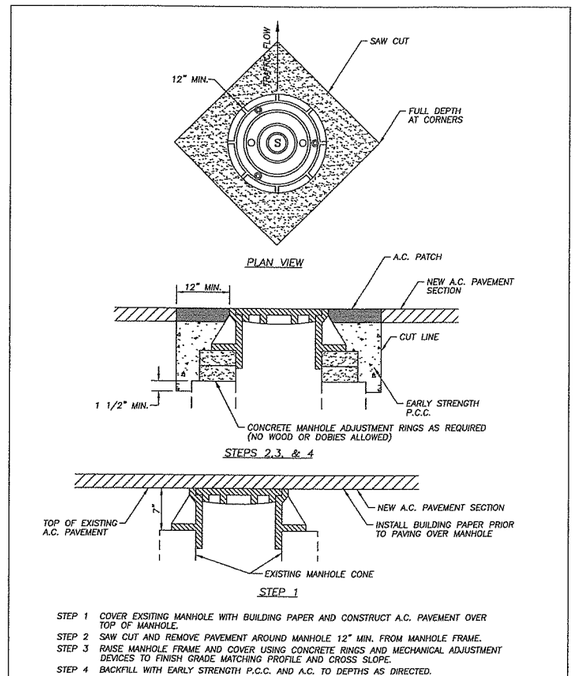

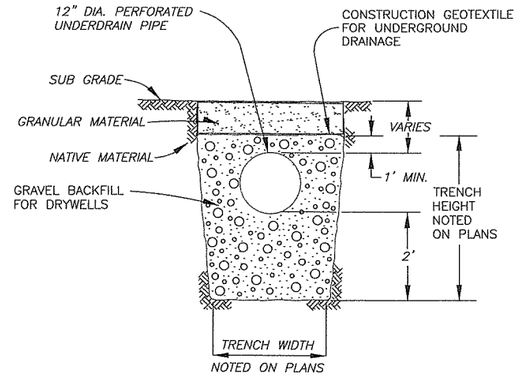

12" UNDERDRAIN PIPE DETAIL

NTS

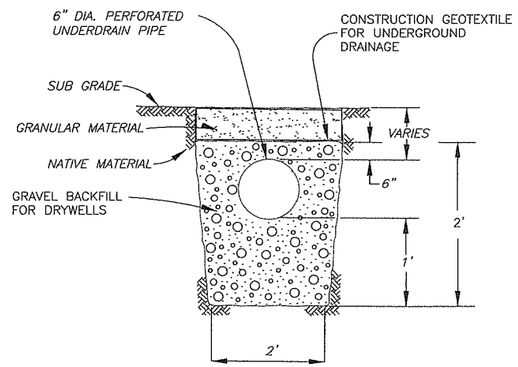

6" UNDERDRAIN PIPE DETAIL

NTS

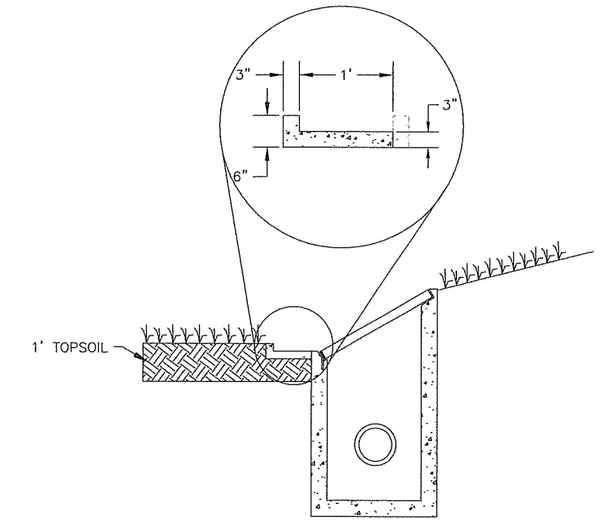

CEMENT CONCRETE OUTLET TROUGH DETAIL

NTS

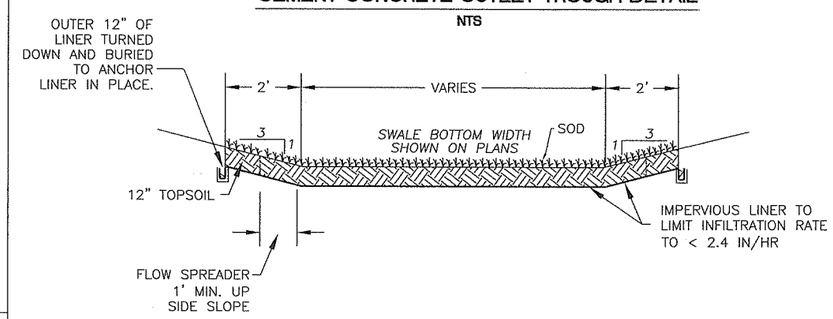

BIOFILTRATION SWALE

NTS

NOTES

1. TOP SOIL TO BE TYPE A. (INCL IN PAYMENT OF SWALE).
2. INSTALL SOD ON SWALE BOTTOM ALL DISTURBED AREAS. WITHIN THE SWALE.
3. SWALE VEGETATION TO BE WELL ESTABLISHED PRIOR TO PAVING.
4. SEED MIX FOR BIOFILTRATION SWALE

PERENNIAL RYEGRASS	20%
KENTUCKY BLUEGRASS	30%
TALL FESCUE, ALTA FESCUE	30%
RED FESCUE	20%

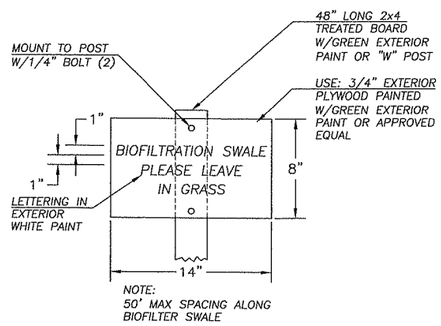

BIOFILTRATION SWALE PROTECTION SIGN

NTS

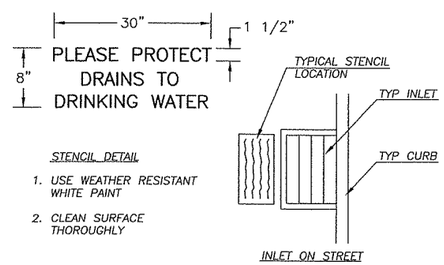

INLET STENCIL DETAIL

NTS

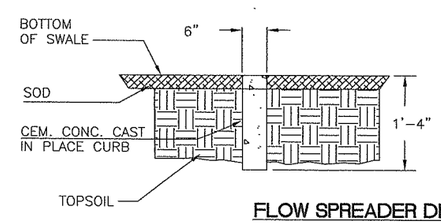

FLOW SPREADER DETAIL

NOTES:

1. POUR SPREADER LEVEL AND FLUSH WITH SWALE BOTTOM TO PROVIDE UNIFORM DISTRIBUTION OF FLOW OVER THE TOP THE SPREADER.
2. EMBED SPREADER 1' INTO SIDESLOPES

DESIGNED	BAK
DRAWN	BAK
CRP	311022
HOR.	NA
VERT.	NA
DATE	1/16/04
DWG:	D02
SHEET	18 OF 93

CALL 48 HOURS BEFORE YOU DIG 1-800-553-4344 "It's the Law" NORTHWEST UTILITIES NOTIFICATION CENTER

LUKAS D. GRANGE STATE OF WASHINGTON 38486 REGISTERED PROFESSIONAL ENGINEER
EXPIRES: JANUARY 20, 2005
12-2-04

DESIGN & ENGINEERING DIVISION
DESIGN SECTION

NE 76TH ST (SR-503 TO NE 147TH AVE)
DRAINAGE DETAILS

proud past, promising future
CLARK COUNTY WASHINGTON

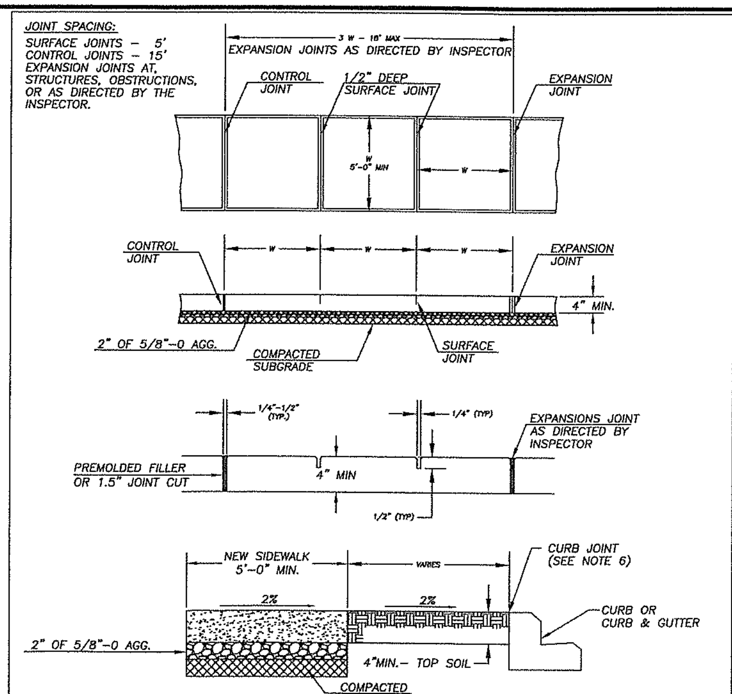

NOTES:

1. CONCRETE SHALL BE 3,000 PSI MIN. (CLASS 3000), 3 1/2" SLUMP (± 1")
2 FINISH SHALL BE MEDIUM BROOM PERPENDICULAR TO PEDESTRIAN TRAFFIC UNLESS OTHERWISE DIRECTED.
3. ALL EXISTING EDGES SHALL BE SAWCUT.
4. NO FILLER REQUIRED FOR SURFACE JOINTS.
5. ALL JOINTS AND EDGES SHALL BE FINISHED WITH 1/4" RADIUS EDGER (3" SMOOTH EACH SIDE)
6. FOR SIDEWALKS ADJACENT TO THE CURB AND POURED AT THE SAME TIME AS THE CURB, THE JOINT BETWEEN THEM SHALL BE A TROWELED JOINT WITH A MIN. 1/2" RADIUS.

NO.	REVISIONS	DATE	BY
1	CHANGE SUBGRADE &	03/28/02	KB
2	+ 2" BASE AGG. & NOTES	10/07/02	SCH

DWG: F12.dwg

Department of Public Works
CLARK COUNTY WASHINGTON
proud past, promising future

SIDEWALK DETAIL

APPROVED
COUNTY ENGINEER — DATE 01/01/04

STANDARD F12 PLAN No.
DESIGNED DB
DRAWN KB
DATE 10/08/02

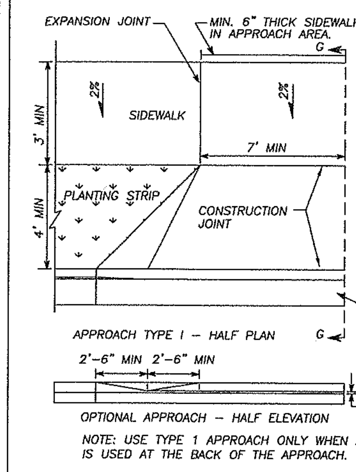

NOTES:
1. A MINIMUM 3' WIDE ACCESSIBLE ROUTE SHALL BE MAINTAINED IN ALL PEDESTRIAN ACCESSIBLE AREAS.
2. CONTRACTION POINTS SHALL BE PLACED ALONG SIDEWALKS IN ACCORD WITH SIDEWALK DETAIL. ALL JOINTS SHALL BE CLEANED AND EDGED.
3. CHANGES IN LEVEL UP TO 1/4" MAY BE VERTICAL AND WITHOUT EDGE TREATMENT. CHANGES IN LEVEL BETWEEN 1/4" AND 1/2" SHALL BE BEVELED WITH A SLOPE NO GREATER THAN 2:1.
4. CEMENT CONCRETE APPROACHES SHALL BE CONSTRUCTED OF AIR–ENTRAINED CLASS 3000 AND MAY BE POURED INTEGRAL WITH CURB.
5. EXISTING CURB, GUTTER, AND SIDEWALK TO BE SAWCUT AND REMOVED FOR INSTALLATION OF APPROACH.
6. COMMERCIAL DRIVEWAY REQUIRES REINFORCING STEEL (6"x6" 10 GA WIRE MESH) MIN. 3" COVER.
7. 3" DEPTH 3/4"–0 CRUSHED AGGREGATE BASE COMPACTED TO 95% OF MAX. DRY DENSITY.
8. SUBGRADE PREPARATION PER WSDOT STD. SPEC. 2–06.3(1).

CEMENT CONCRETE CURB AND GUTTER SECTION SHOWN (SEE STANDARD PLANS FOR OTHER CURB DESIGNS).

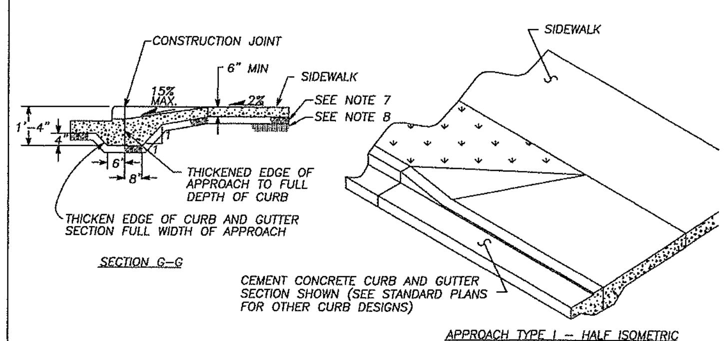

NO.	REVISIONS	DATE	BY
1	NOTE #6, 7, 8	10/09/02	SCH

DWG: 7/24/00

Department of Public Works
CLARK COUNTY WASHINGTON
proud past, promising future

DETAIL – TYPE 1
CEMENT CONCRETE APPROACH

APPROVED
COUNTY ENGINEER — DATE 8/22/00

F14
DESIGNED DB
DRAWN KB
DATE

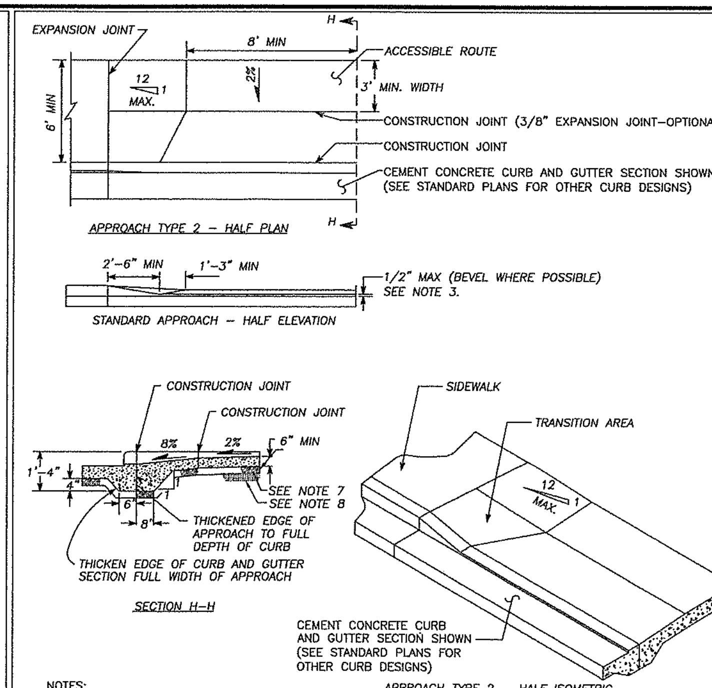

NOTES:

1. A MINIMUM 3' WIDE ACCESSIBLE ROUTE SHALL BE MAINTAINED IN ALL PEDESTRIAN ACCESSIBLE AREAS.
2. CONTRACTION JOINTS SHALL BE PLACED ALONG SIDEWALKS IN ACCORD WITH SIDEWALK DETAIL. ALL JOINTS SHALL BE CLEANED AND EDGED.
3. CHANGES IN LEVEL UP TO 1/4" MAY BE VERTICAL AND WITHOUT EDGE TREATMENT. CHANGES IN LEVEL BETWEEN 1/4" AND 1/2" SHALL BE BEVELED WITH A SLOPE NO GREATER THAN 2:1.
4. CEMENT CONCRETE APPROACHES SHALL BE CONSTRUCTED OF AIR–ENTRAINED CONCRETE CLASS 3000 AND MAY BE POURED INTEGRAL WITH CURB.
5. EXISTING CURB, GUTTER AND SIDEWALK TO BE SAWCUT AND REMOVED FOR INSTALLATION OF APPROACH.
6. COMMERCIAL DRIVEWAY REQUIRES REINFORCING STEEL (6"x6" 10 GA WIRE MESH) MIN. 3" COVER
7. 3" DEPTH 3/4"–0 CRUSHED AGGREGATE BASE COMPACTED TO 95% OF MAX. DRY DENSITY.
8. SUBGRADE PREPARATION PER WSDOT STD. SPEC. 2–06.3(1).

NO.	REVISIONS	DATE	BY
1	NOTES #6, 7, 8	10/09/02	

DWG: F15.DWG

Department of Public Works
CLARK COUNTY WASHINGTON
proud past, promising future

CEMENT CONCRETE APPROACH
DETAIL – TYPE 2

APPROVED
COUNTY ENGINEER — DATE 8/22/00

F15
DESIGNED KB
DRAWN DB
DATE 7/24/00

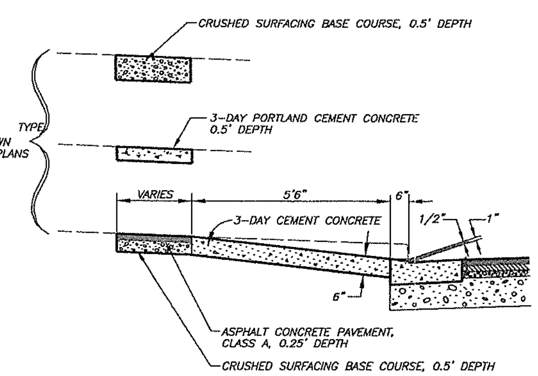

SECTION A-A

NTS

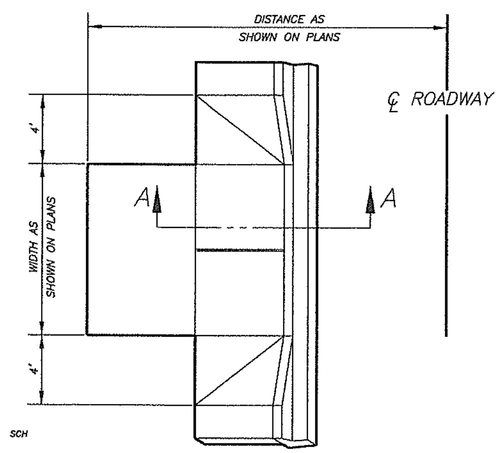

TYPICAL DRIVEWAY ENTRANCE

NTS

OPEN CUT UTILITY TRENCH BACKFILL DETAIL (COLLECTOR OR ARTERIAL)

SURFACING:
1. All A.C.P. shall be saw cut to provide a straight, clean edge prior to paving.
2. The cut line shall be one continuous straight line from the outer excavation limits of manhole, valve box, etc. to manhole, valve box, etc.
3. Pave with an 0.5 ft. minimum compacted depth A.C.P., or match existing or design section, whichever is greater.
4. Lifts for A.C.P. (Class A) shall be 0.15 ft. minimum and 0.35 ft. maximum for non-surface lifts (0.25' maximum for surface lift); the temperature shall be 250 degree minimum, 350 degree maximum, compacted to 92% of the theoretical maximum.
5. All joints shall be tacked, sealed and sanded.
6. Trench shall be plated until paved.
7. For longitudinal installation, full lane width including turn lanes restoration shall be required or as directed by Clark County. For transverse installation refer to surfacing restoration of detail U6. See Section 12.20A.120.C.

BASE COURSE:
1. 0.80 ft. minimum depth (1–1/4" minus) C.S.B.C. (W.S.D.O.T. approved material).
2. Compacted to 95% of maximum density. See trench zone.
3. Equivalent depth of A.T.B. may be substituted.
4. For transverse or diagonal trenches in existing roadway pavement, CDF (as defined in the standard specifications section 2–09.3(1)E) will be used for a minimum of 3' in depth or from 6" above the top of the pipe to the bottom of full pavement section which ever is less.

TRENCH ZONE:
1. Granular backfill as approved by local agency or W.S.D.O.T. specifications for granular backfill. Compacted to 95% of maximum density in the trench zone using Method C compaction as per Section 2–03.3(14)C.
2. Native material may be used if approved prior to construction by Clark County.
3. Trench zone width –– see below.

PIPE ZONE:
1. Pipe zone material as specified by utility owner, and shall conform to section 9–03.12(3) WSDOT Specs.
2. 1.0 ft. max. from top of the pipe. 6" from top of pipe when CDF backfill used.

CONDITIONS:
1. A copy of the permit and requirements shall be on the job site at all times.
2. The permit holder shall be responsible for all restoration and maintenance of ditches, shoulders, driveways, landscaping, etc.
3. Call Clark County at 397–2446 twenty-four hours prior to commencing work.

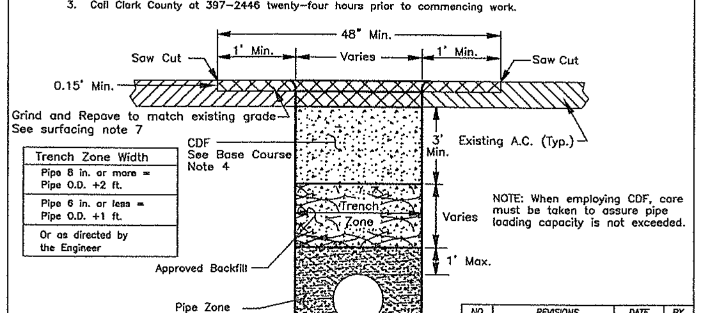

NO.	REVISIONS	DATE	BY
2	ILLUSTRATIVE CHANGE	07/10/01	BK
3	Notes: 6 Del., Rev. 7	10/07/02	SCH

DWG: U1.DWG

Department of Public Works
CLARK COUNTY WASHINGTON
proud past, promising future

OPEN CUT UTILITY TRENCH BACKFILL DETAIL
COLLECTOR OR ARTERIAL ROADWAY

APPROVED
COUNTY ENGINEER — DATE 7/20/01

STANDARD U1 PLAN No.
DATE 04/29/03

ROADWAY SHOULDER INCLUDES LAWN AND LANDSCAPE

SHOULDER ROCK:
1. 0.50 ft. minimum depth (1 1/4" minus) crushed rock. (Clark County Approved Material).
2. Compacted to 95% of maximum density. See trench zone.
3. Rock shall extend from E.O.P. to the back of trench at approx. .05 Ft./Ft. slope.

LAWN & LANDSCAPE AREAS:
1. A County approved top soil shall be placed 0.50 Ft. in depth.
2. Area to be restored to match existing.

TRENCH ZONE:

Where the distance from E.O.T. to E.O.P. is less than or equal to the depth of the trench; these conditions shall apply:

1. Granular backfill as approved by local agency or W.S.D.O.T. specifications for granular backfill. Compacted to 95% of maximum density in the trench zone using Method C compaction as per Section 2–03.3 (14)C.
2. Native material may be used if approved prior to construction.
3. Trench zone width –– see below.
4. Shoulder rock or landscaped sections as applicable.

PIPE ZONE:
1. Pipe zone material as specified by utility owner, and shall conform to section 9–03.12(3) WSDOT Specs.
2. 1.0 ft. max. from top of the pipe.

CONDITIONS:
1. A copy of the permit and requirements shall be on the job site at all times.
2. The permit holder shall be responsible for all restoration and maintence of ditches, shoulders, driveways, landscaping, ect.
3. Call Clark County at 397–2446 twenty-four hours prior to commencing work.

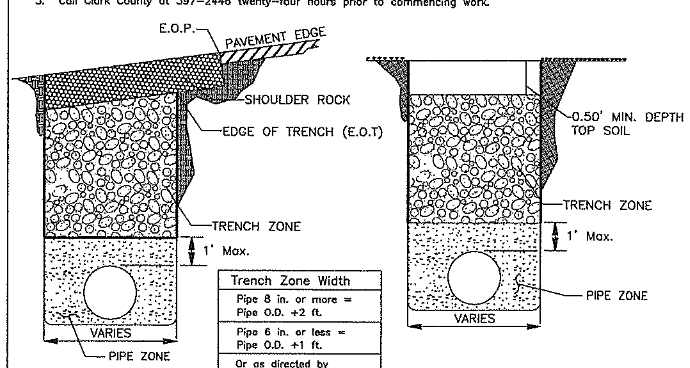

NO.	REVISIONS	DATE	BY
1	NOTE: FIG #	05/02/01	DS
2	Pipe Zone Notes	10/07/02	SCH

DWG: U5.DWG

Department of Public Works
CLARK COUNTY WASHINGTON
proud past, promising future

ROADWAY SHOULDER
INCLUDES LAWN & LANDSCAPE

APPROVED
COUNTY ENGINEER — DATE 5/4/01

STANDARD U5 PLAN No.
DATE 04/29/03

THE TOP AND BOTTOM WOOD CROSS BRACES SHALL BE PLACED 6" FROM THE END OF THE WOOD PICKETS. THE MIDDLE BRACE SHALL BE CENTERED WITHIN THE FENCE.

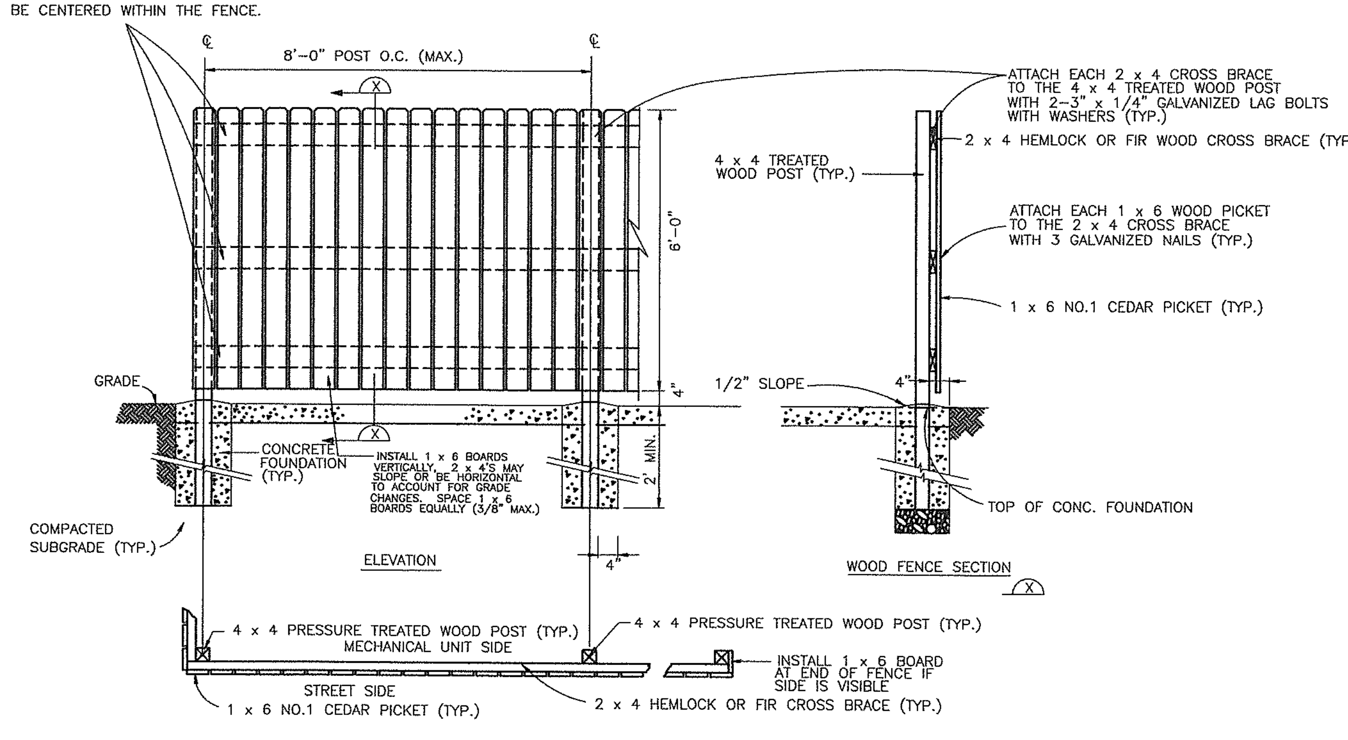

WOOD FENCE DETAILS

NTS

DESIGN & ENGINEERING DIVISION
DESIGN SECTION

NE 76TH ST (SR–503 TO NE 147TH AVE)
ROADWAY DETAILS

CLARK COUNTY WASHINGTON
proud past, promising future

BRUCE A. KLUG, STATE OF WASHINGTON, 39868 REGISTERED PROFESSIONAL ENGINEER
EXPIRES: APRIL 7, 2004

CALL 48 HOURS BEFORE YOU DIG
1–800–553–4344
"It's the Law"
NORTHWEST UTILITIES NOTIFICATION CENTER

DESIGNED	BAK
DRAWN	KB
CRP	311022
HOR.	9
VERT.	NA
DATE	1/16/04
DWG:	D03
SHEET 19	OF 93

NEW CONSTRUCTION
FOR USE WITH SIDEWALKS LOCATED ANYWHERE IN THE RIGHT-OF-WAY

NOTES:

RAMPS TO BE POURED SEPARATELY FROM SIDEWALK.

CROSSWALKS TO BE CENTERED ON SIGNAL POLE TO POLE CENTERLINES. CURB RAMP TO BE CENTERED WITHIN CROSSWALK.

SIDEWALK SLOPE TO BE 2% MAXIMUM RADIALLY AROUND CORNER SECTION. SINGLE RAMPS CAN BE INSTALLED.

TRAFFIC SIGNAL POLE LOCATED ON RP-RP LINE AT 11' IN FROM CURB FACE.

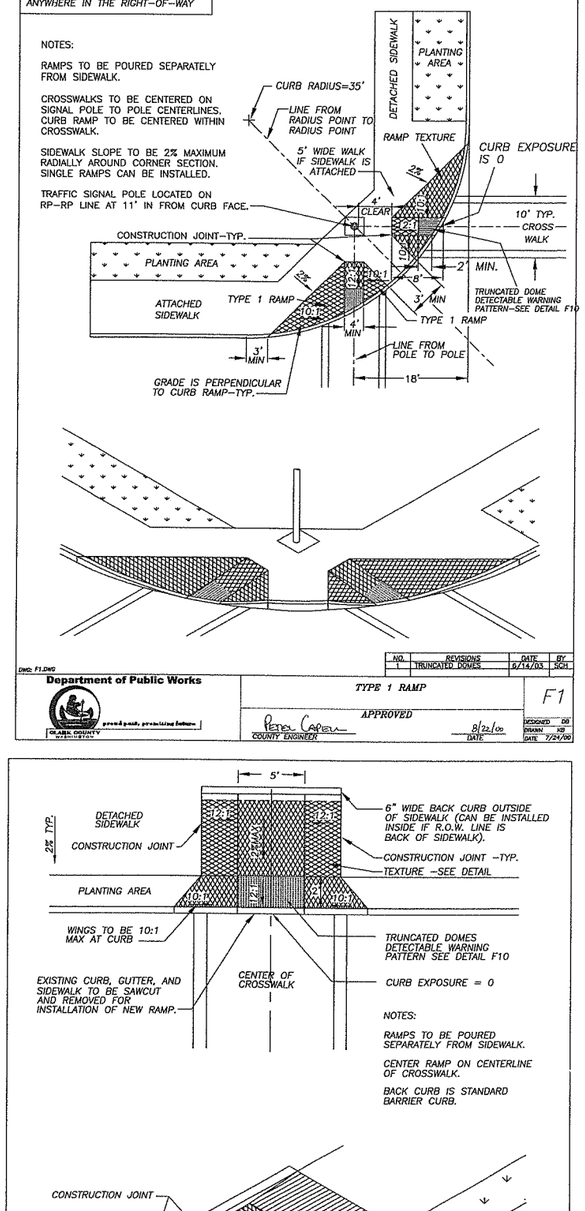

DWG: F1.DWG

NO.	REVISIONS	DATE	BY
1	TRUNCATED DOMES	6/14/03	SCH

Department of Public Works — CLARK COUNTY WASHINGTON — proud past, promising future

TYPE 1 RAMP — F1

APPROVED — Peter Capell, COUNTY ENGINEER — 8/22/00 DATE

DESIGNED DB; DRAWN KB; DATE 7/24/00

NOTES:

EXISTING CURB, GUTTER, AND SIDEWALK TO BE SAWCUT AND REMOVED FOR INSTALLATION OF NEW RAMP.

RAMPS TO BE POURED SEPARATELY FROM SIDEWALK.

6" BACK CURB OUTSIDE OF SIDEWALK (CAN BE INSTALLED INSIDE IF R.O.W. LINE IS BACK OF SIDEWALK). BACK CURB IS ST. BARRIER CURB.

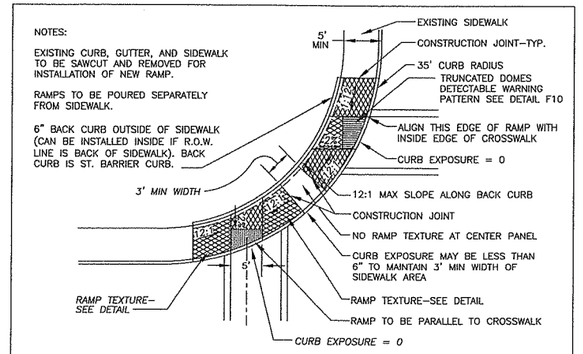

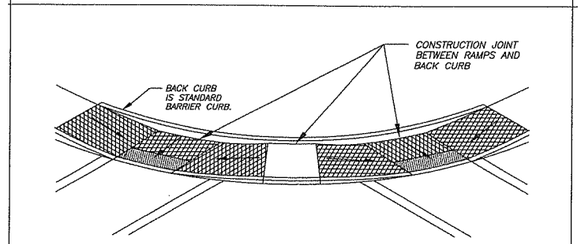

THIS TYPE OF RAMP IS ONLY TO BE USED IN EXISTING RESTRICTED RIGHT-OF-WAY AREAS, DOUBLE RAMP SHOWN-SINGLE RAMP MAY BE USED AT SOME INSTALLATIONS.

DWG: F2.DWG

NO.	REVISIONS	DATE	BY
1	TRUNCATED DOMES	6/14/03	SCH

Department of Public Works — CLARK COUNTY WASHINGTON — proud past, promising future

TYPE 2 RAMP - DOUBLE — F2

APPROVED — Peter Capell, COUNTY ENGINEER — 8/22/00 DATE

DESIGNED DB; DRAWN KB; DATE 7/24/00

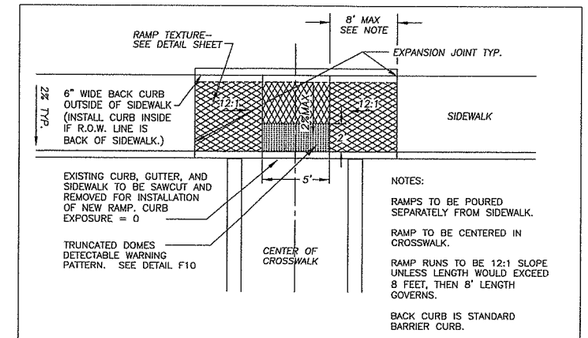

NOTES:

RAMPS TO BE POURED SEPARATELY FROM SIDEWALK.

RAMP TO BE CENTERED IN CROSSWALK.

RAMP RUNS TO BE 12:1 SLOPE UNLESS LENGTH WOULD EXCEED 8 FEET, THEN 8' LENGTH GOVERNS.

BACK CURB IS STANDARD BARRIER CURB.

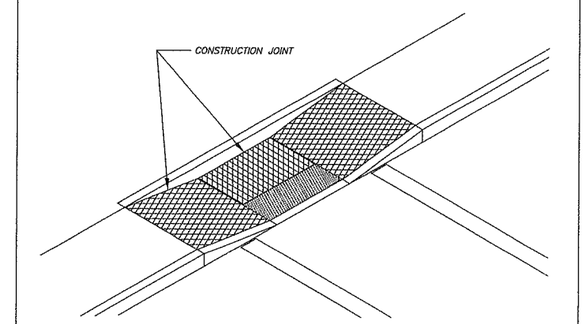

DWG: F3.DWG

NO.	REVISIONS	DATE	BY
1	TRUNCATED DOME PATTERN	6/15/03	SCH

Department of Public Works — CLARK COUNTY WASHINGTON — proud past, promising future

TYPE 3 RAMP — F3

APPROVED — Peter Capell, COUNTY ENGINEER — 8/22/00 DATE

DESIGNED DB; DRAWN KB; DATE 7/24/00

NOTES:

RAMPS TO BE POURED SEPARATELY FROM SIDEWALK.

CENTER RAMP ON CENTERLINE OF CROSSWALK.

BACK CURB IS STANDARD BARRIER CURB.

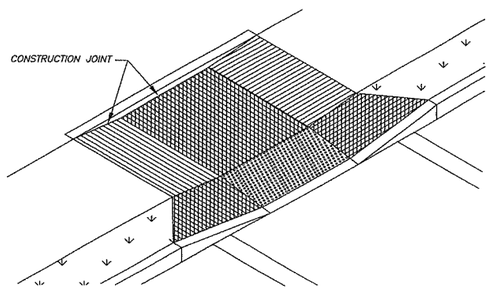

DWG: F4.DWG

NO.	REVISIONS	DATE	BY
1	TRUNCATED DOME PATTERN	6/14/03	SCH

Department of Public Works — CLARK COUNTY WASHINGTON — proud past, promising future

TYPE 4 RAMP — F4

APPROVED — Peter Capell, COUNTY ENGINEER — 8/22/00 DATE

DESIGNED DB; DRAWN KB; DATE 7/24/00

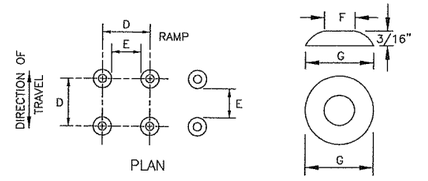

PLAN

TRUNCATED DOME DETAIL

	MIN.	MAX.
D	1 5/8"	2 3/8"
E	5/8"	1 1/2"
F	7/16"	3/4"
G	7/8"	1 7/16"

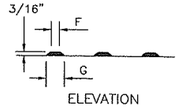

ELEVATION

TRUNCATED DOMES (SEE NOTE 2) DETECTABLE WARNING PATTERN DETAIL

NOTES

1. AVOID PLACING DRAINAGE STRUCTURES, JUNCTION BOXES OR OTHER OBSTRUCTIONS IN FRONT OF RAMP ACCESS AREA.

2. THE DETECTABLE WARNING PATTERNS CAN BE CREATED BY ACCEPTABLE MEANS THAT WILL ACHIEVE THE TRUNCATED DOME DIMENSIONS AND SPACING SHOWN.

3. PLACE TRUNCATED DOME DETECTABLE WARNING TEXTURE IN THE LOWER 24" OF THE THROAT OF THE RAMP ONLY. ARRANGE DOMES USING IN-LINE PATTERN ONLY AS SHOWN. COLOR OF TEXTURE (COATING) SHALL BE SAFETY YELLOW IN COMPLIANCE WITH WSDOT STD. SPEC. OR AS INSTRUCTED BY COUNTY INSPECTOR.

4. FOR CONSTRUCTION OF SIDEWALK RAMPS OUTSIDE OF PUBLIC RIGHT-OF-WAY, CHECK WITH STATE BUILDING CODES.

DWG: F10.DWG

NO.	REVISIONS	DATE	BY

Department of Public Works — CLARK COUNTY WASHINGTON — proud past, promising future

TRUNCATED DOME DETECTABLE WARNING PATTERN — STANDARD F10 — PLAN No.

APPROVED — Peter Capell, COUNTY ENGINEER — 01/01/04 DATE

DESIGNED SCH; DRAWN SCH; DATE 6/15/03

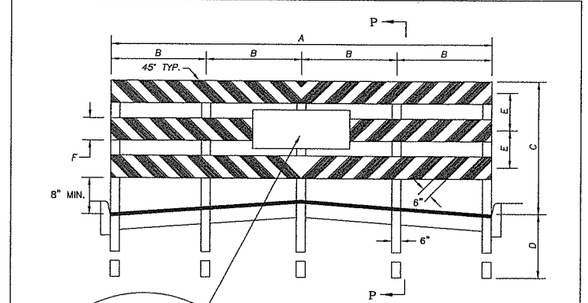

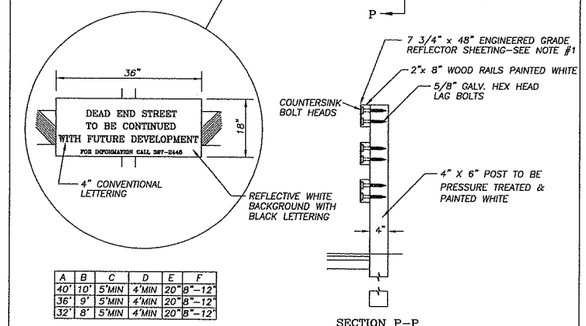

SECTION P-P

A	B	C	D	E	F
40"	10'	5'MIN	4'MIN	20"	8"-12"
36"	9'	5'MIN	4'MIN	20"	8"-12"
32"	8'	5'MIN	4'MIN	20"	8"-12"

NOTES:

1. ENGINEERED GRADE REFLECTOR SHEETING TO BE .040 GAUGE H38 ALLOY WITH ALODINE 1200 CONVERSION COATING. STRIPING SHALL BE ALTERNATING ORANGE AND WHITE STRIPES 6" IN WIDTH AT A 45° ANGLE. REFLECTIVE SHEETING MUST BE SECURELY FASTENED TO THE 2x8 PLANKS USING GALVANIZED NAILS OR SCREWS.
2. THIS BARRICADE SHALL CONFORM TO SECTION 6F-60, MANUAL OF UNIFORM TRAFFIC CONTROL DEVICES.

DWG: F22.DWG

NO.	REVISIONS	DATE	BY

Department of Public Works — CLARK COUNTY WASHINGTON — proud past, promising future

STREET BARRICADE — STANDARD F22 — PLAN No.

APPROVED — Peter Capell, COUNTY ENGINEER — 01/01/04 DATE

DESIGNED SCH; DRAWN SCH; DATE 07/07/03

DESIGNED	BAK
DRAWN	KB
CRP	311022
HOR.	NA
VERT.	NA
DATE	1/16/04
DWG:	D04
SHEET 20	OF 93

CALL 48 HOURS BEFORE YOU DIG 1-800-553-4344 "It's the Law" NORTHWEST UTILITIES NOTIFICATION CENTER

STATE OF WASHINGTON — GARY A. KLUG — 19868 — REGISTERED PROFESSIONAL ENGINEER — EXPIRES: APRIL 2004

DESIGN & ENGINEERING DIVISION
DESIGN SECTION

NE 76TH ST (SR-503 TO NE 147TH AVE)
ROADWAY DETAILS

proud past, promising future — CLARK COUNTY WASHINGTON

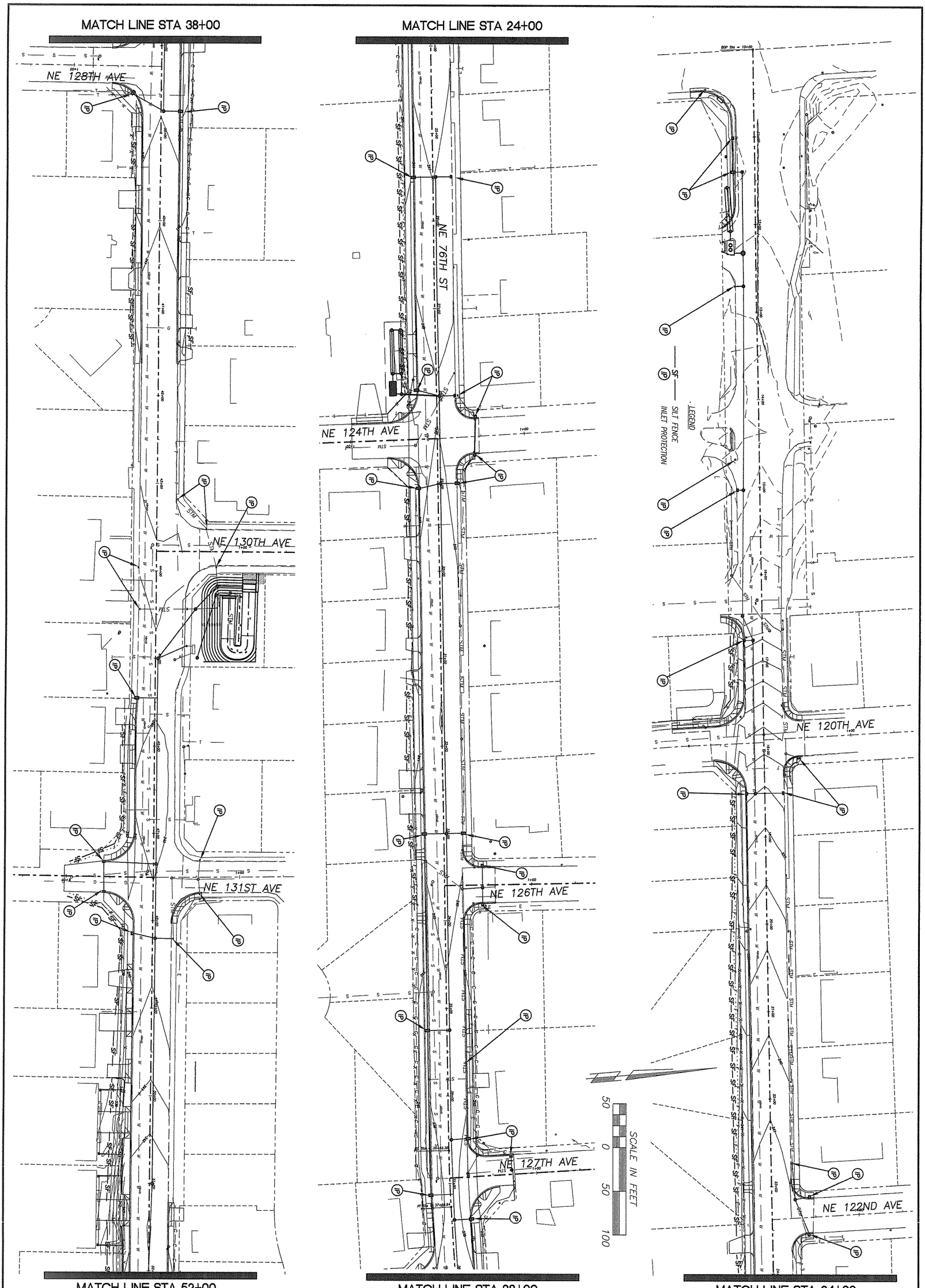

proud past, promising future

CLARK COUNTY
WASHINGTON

DESIGN & ENGINEERING DIVISION
DESIGN SECTION

NE 76TH ST (SR-503 TO NE 147TH AVE)
EROSION CONTROL PLAN

BRUCE A. ROSS
STATE OF WASHINGTON
30868
REGISTERED
PROFESSIONAL ENGINEER
EXPIRES: APRIL 7, 2004
2-17-04

CALL 48 HOURS BEFORE YOU DIG
1-800-553-4344
"It's the Law"
NORTHWEST UTILITIES NOTIFICATION CENTER

DESIGNED	BAK
DRAWN	BAK
CRP	311022
HOR.	1"=50'
VERT.	NA
DATE	1/16/04
DWG:	EC1
SHEET 21	OF 93

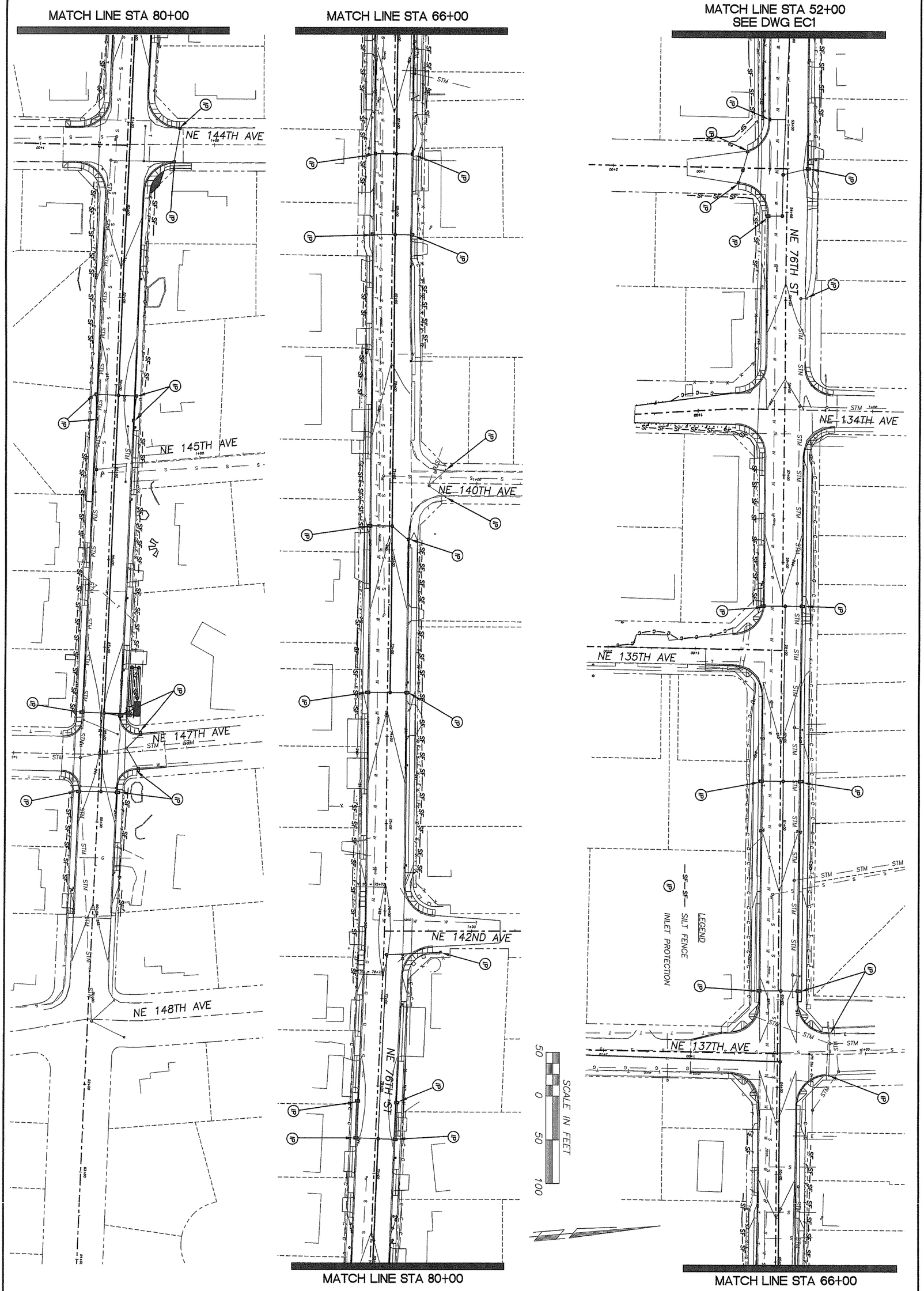

proud past, promising future

CLARK COUNTY
WASHINGTON

DESIGN & ENGINEERING DIVISION
DESIGN SECTION

NE 76TH ST (SR-503 TO NE 147TH AVE)
EROSION CONTROL PLAN

BRUCE A. ALLEN
STATE OF WASHINGTON
30868
REGISTERED
PROFESSIONAL ENGINEER
EXPIRES: APRIL 7, 2004
2-17-04

CALL 48 HOURS BEFORE YOU DIG
1-800-553-4344
"It's the Law"
NORTHWEST UTILITIES NOTIFICATION CENTER

DESIGNED	BAK
DRAWN	BAK
CRP	311022
HOR.	1"=50'
VERT.	NA
DATE	1/16/04
DWG:	EC2
SHEET 22	OF 93

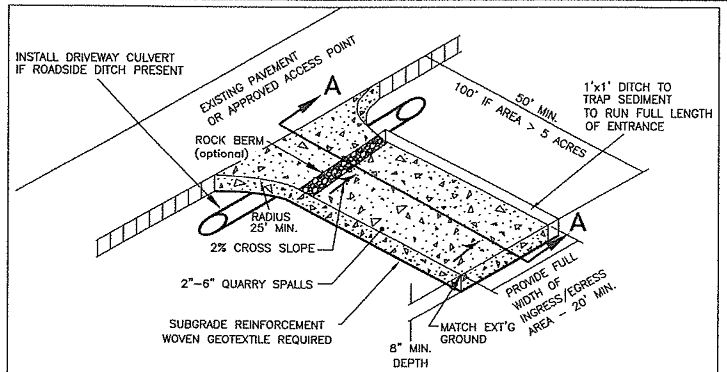

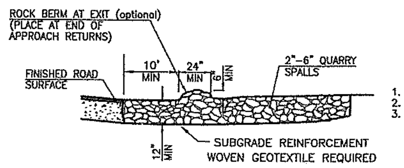

1. EXCAVATE MINIMUM OF 12" OF EXISTING SOILS.
2. PLACE MINIMUM OF 12" OF 2"-6" QUARRY SPALLS
3. CONSTRUCT ROCK BERM ALONG TRANSITION POINT TO FINISH ROAD SURFACES, DIVERT RUNOFF TO ONSITE AREA (OPTIONAL).

SECTION A-A

NOTES:

1. FOR DEVELOPMENT PROJECTS REVIEWED BY ENGINEERING SERVICES. NOT FOR USE WITH SINGLE FAMILY OR DUPLEX RESIDENTIAL BUILDING PERMITS. SEE BUILDING DEPT. FOR GRAVEL CONSTRUCTION ENTRANCE PLAN.
2. INSTALL WOVEN GEOTEXTILE FABRIC TO PREVENT SUB-SOIL PUMPING.
3. VEHICLE WASHDOWN AREA, IF REQUIRED, IS TO BE INSTALLED AND USED TO REMOVE SEDIMENT FROM VEHICLES THAT ARE ABOUT TO ENTER AN ESTABLISHED ROAD.
4. WASHDOWN AREA TO BE MADE UP OF CLEAN 2"- 6" QUARRY SPALLS, 1" DEEP (MIN) OVER WOVEN GEOTEXTILE FABRIC. WASHDOWN AREA TO BE FULL WIDTH OF ENTRANCE AND 50' (MIN.), AND 100' IF EXPOSED SOIL IS OVER 5 ACRES.
5. AT TIME OF PRECONSTRUCTION MEETING, THE COUNTY INSPECTOR MAY REQUIRE THE ENTRANCE TO BE PAVED TO THE EDGE OF THE RIGHT-OF-WAY PRIOR TO THE INSTALLATION OF A WASHDOWN ENTRANCE TO AVOID DAMAGE TO THE EXISTING ROADWAY.
6. THE RESPONSIBLE EROSION CONTROL INDIVIDUAL IS TO ENSURE THAT ALL VEHICLES USE THIS ENTRANCE AND ARE TO BE INSPECTED AND CLEANED OF SOILS BEFORE LEAVING PROJECT, AND THAT THE ENTRANCE IS TO BE KEPT CLEAN AT ALL TIMES.

NO.	REVISIONS	DATE	BY

DWG: E-1.DWG

Department of Public Works — CLARK COUNTY WASHINGTON — proud past, promising future

STANDARD CONSTRUCTION ENTRANCE — APPROVED — COUNTY ENGINEER — DATE

STANDARD E-1 — PLAN No. — DESIGNED SCH — DRAWN SCH — DATE 07/07/03

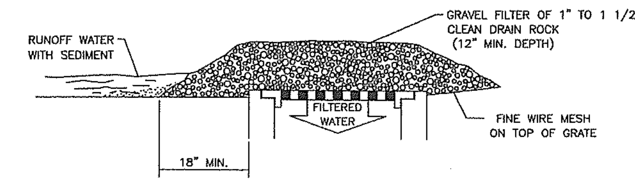

GRAVEL & WIRE MESH

NOT TO BE USED IN TRAVELED WAY IF IT MAY RESULT IN A TRAFFIC HAZARD

INLET PROTECTION NOTES:

1. INLET PROTECTION IS INTENDED TO PREVENT COARSE SEDIMENT FROM ENTERING STORM DRAINAGE SYSTEMS BY FILTERING RUNOFF AND RETAINING SEDIMENT BEFORE IT REACHES A DRAINAGE OR STORM SEWER SYSTEM.
2. PLACE INLET PROTECTION IN AREAS WHERE WATER CAN POND, AND WHERE PONDING WILL NOT HAVE ADVERSE IMPACTS.
3. INLET PROTECTION MUST ALLOW FOR OVERFLOW IN A SEVERE STORM EVENT.
4. INLET PROTECTION TYPES INCLUDE: TYPE 1 – GRAVEL AND WIRE MESH
TYPE 2 – MASONRY AND ROCK
TYPE 3 – SEDIMENT FENCE
TYPE 4 – BIOFILTER BAGS
TYPE 5 – CATCH BASIN INSERT
5. INSPECT ONCE PER WEEK ON ACTIVE SITES, ONCE EVERY TWO WEEKS ON INACTIVE SITES, AND WITHIN 24 HOURS FOLLOWING A 0.5 INCH RAIN EVENT.
6. CLEAN INLET PROTECTION DURING AND AFTER EACH SIGNIFICANT STORM AND REMOVE SEDIMENT FROM BEHIND STRUCTURE AFTER EVERY STORM.
7. IF ROCK BECOMES CLOGGED WITH SEDIMENT, IT MUST BE CAREFULLY REMOVED FROM THE INLET AND EITHER CLEANED OR REPLACED.
8. ASSESS THE IMPACT OF ALLOWING WATER TO POND AT THE INLET AND PROVIDE AN OVERFLOW WEIR OR SOME OTHER TYPE OF RELIEF AS NEEDED.
9. CONSIDER THE EFFECT OF PLACING OBSTRUCTIONS AT INLETS ON GRADE MAY HAVE ON THEIR EFFICIENCY.
10. USE MECHANICAL MEANS TO REMOVE SEDIMENT DEPOSITS (SHOVEL, BROOM, SWEEPER/VACTOR UNIT).
11. REMOVE SEDIMENT ACCUMULATED ON OR AROUND THE PROTECTION AS NEEDED TO MAINTAIN INTENDED FUNCTION.
12. REPAIR OR REPLACE MATERIALS AS NEEDED TO ENSURE PROPER FUNCTION.

NO.	REVISIONS	DATE	BY

DWG: E-3.DWG

Department of Public Works — CLARK COUNTY WASHINGTON — proud past, promising future

INLET PROTECTION TYPE 1 GRAVEL AND WIRE MESH — APPROVED — COUNTY ENGINEER — DATE

STANDARD E-3 — PLAN No. — DESIGNED SCH — DRAWN SCH — DATE 08/07/02

STANDARD NOTES FOR EROSION CONTROL PLAN

1. The Contractor shall install and maintain BMP's as shown and perform all actions necessary to prevent erosion, and control sediment from leaving the construction site. Site Contractor shall comply with Clark County Code Chapter 13 .29, Article IV.

2. All erosion control measures shall be in-place and in working condition prior to disturbing and exposing any soil surfaces (i.e. silt fence, construction entrance, sedimentation barriers, sedimentation traps).

3. All erosion prevention and control BMP's shall be maintained and repaired as needed to insure continued performance of their intended function. Needed repairs shall be made as soon as practicable. They are to remain in place and operational during all phases of construction. Construction activities shall not continue or resume until repairs to erosion control facilities are made and the facilities are functional. Any sediment leaving the site or discharging to a sensitive area shall be stopped and controlled immediately. Contaminated areas shall be cleaned and restored.

4. Clearing limits and work area limits shall be delineated and marked. Do not disturb more area than needed for construction requirements.

5. All sensitive or critical areas (wetlands, steep slopes, natural waterways), and buffers shall all be clearly delineated and clearly marked, and protected from sediment deposition.

6. Sediment laden runoff shall be prevented from entering all existing storm water catch basins and inlets affected by construction.

7. No exposed, bare soils shall remain unstabilized for more than two days during the period October 1 thru April 30 or for more than seven days during the period of May 1 through September 30. All disturbed soil surfaces shall be stabilized by a suitable application of "Best Management Practices".

8. Where feasible, no more than 500 feet of trench shall be open at one time. Excavated material shall be placed on the up-hill side of trenches provided it does not conflict with safety requirements.

9. Dewatering devices shall discharge into a sediment trap or sediment pond. No discharge shall be made to a paved street or stormwater collection system without first removing sediment.

10. Cut and fill slopes shall be constructed in a manner that will minimize erosion. Erosion shall be controlled and prevented by such measures as roughening the surface, installation of interceptor ditches, terracing, covering with matting, mulch or plastic sheeting. Runoff shall be prevented from entering a slope and from undercutting the base of slopes.

11. Any soil or debris transported onto roadways and sidewalks shall be removed. Deposits shall be completely removed by shoveling and/or sweeping. Washing shall not be utilized unless specifically approved in writing by the County.

12. All permanent infiltration systems shall be isolated and protected from sediment laden runoff entering to avoid risk of reducing the ability of the systems to infiltrate. Isolation and protection shall not be removed until the drainage area tributary to the system is completely stabilized.

CONTINUED ON SHEET 2

NO.	REVISIONS	DATE	BY

DWG: ECN1.DWG

Department of Public Works — CLARK COUNTY WASHINGTON — proud past, promising future

STANDARD NOTES FOR EROSION CONTOL PLAN — APPROVED — COUNTY ENGINEER — DATE

STANDARD ECN1 — PLAN No. — DESIGNED SCH — DRAWN SCH — DATE 06/05/02

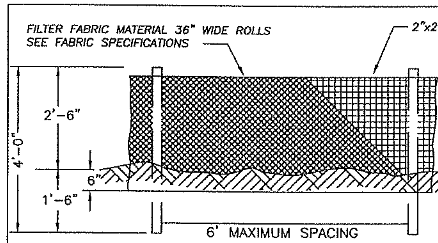

FRONT VIEW
NTS

SEDIMENT FENCE FABRIC SPECIFICATIONS
(Woven Polyproylene sediment fence fabric)

PROPERTY	TEST PROCEDURE	MIN. FABRIC VALUE
Grab Tensile Strength	ASTM D-4632	180 lbs.
Grab elongation	ASTM D-4632	15%
trapezoid Tear	ASTM D-4533	70 lbs.
Mullen Burst	ASTM D-3786	300 psi.
Puncture	ASTM D-4833	80 lbs.
Permitivity	ASTM D-4491	0.07 sec-1
Permeability	ASTM D-4491	.005 cm/sec
A.O.S.	ASTM D-4751	50 U.S. Sieve
UV Resistance(500 hrs)	ASTM D-4355	90%

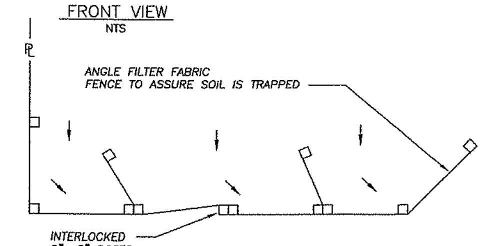

PLAN VIEW
NTS

NOTES
1. THIS SEDIMENT BARRIER UTILIZES STANDARD STRENGTH OR EXTRA STRENGTH SYNTHETIC FILTER FABRICS, IT IS DESIGNED FOR SITUATIONS IN WHICH ONLY SHEET OR OVERLAND FLOWS ARE EXPECTED. (SEE FABRIC SPECIFICATIONS ABOVE)
2. BURY BOTTOM OF FILTER FABRIC 6" VERTICALLY BELOW FINISHED GRADE.
3. POST ARE TO BE 2"x2" FIR, PINE OR STEEL FENCE POSTS.
4. POST TO BE INSTALLED ON UPHILL SIDE OF SLOPE.
5. COMPACT BOTH SIDES OF FILTER FABRIC TRENCH.
6. SEDIMENT FENCE TO BE SPACED ON SLOPES PER TABLE BELOW.

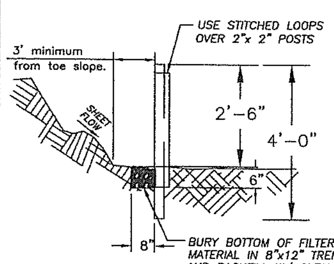

PROFILE
NTS

INSTALL PARALLEL ALONG CONTOURS AS FOLLOWS		
% SLOPE	SLOPE	MAX. SPACING ON SLOPE
10% FLATTER	10:1 OR FLATTER	300 ft.
10>%<15	10:1>x<7.5:1	150 ft.
15>%<20	7.5:1>x<5:1	100 ft.
20>%<30	5:1>x<3.5:1	50 ft.
30>%<50	3.5:1>x<2:1	25 ft.

NO.	REVISIONS	DATE	BY

DWG: E-4.DWG

Department of Public Works — CLARK COUNTY WASHINGTON — proud past, promising future

SILT FENCE — APPROVED — COUNTY ENGINEER — DATE

STANDARD E-4 — PLAN No. — DESIGNED SCH — DRAWN SCH — DATE 07/07/03

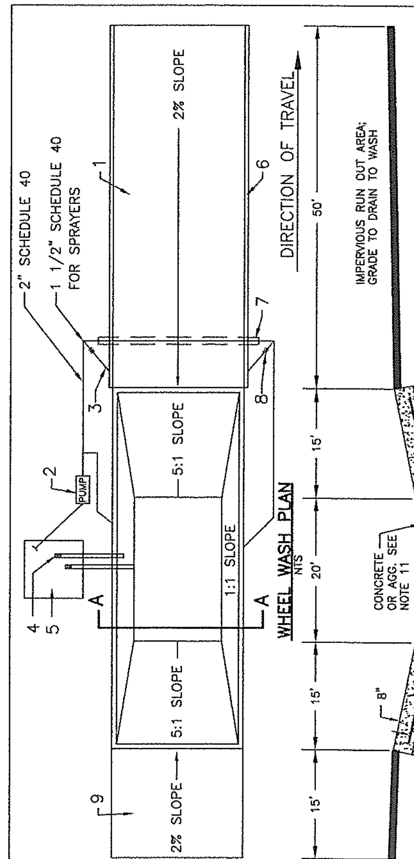

NOTES
1. ASPHALT CONSTRUCTION ENTRANCE, 6" OF ATB.
2. 3" TRASH PUMP WITH FLOATS ON SUCTION HOSE.
3. MIDPOINT SPRAY NOZZLES, IF NEEDED.
4. 6" SEWER PIPE WITH BUTTERFLY VALVES. BOTTOM PIPE IS A DRAIN. LOCATE TOP PIPE'S INVERT 1' ABOVE BOTTOM OF WHEEL WASH.
5. 8'x 8' SUMP WITH 5' OF CATCHMENT. BUILD WITH ABILITY TO CLEAN WITH BACKHOE.
6. ASPHALT CURB ON THE LOW ROAD SIDE TO DIRECT WATER BACK TO POND.
7. 6" SLEEVE UNDER ROAD.
8. BALL VALVES.
9. ATB APRON TO PROTECT FROM SPLASHING WATER.
10. CONTRACTOR TO REMOVE ACCUMULATED SEDIMENT FROM WHEEL WASH; MAY BE PIPED TO AN APPROVED SEDIMENT TRAP.
11. USE GEOTEXTILE FABRIC WITH AGGREGATE FOR A TEMPORARY WHEEL WASH.

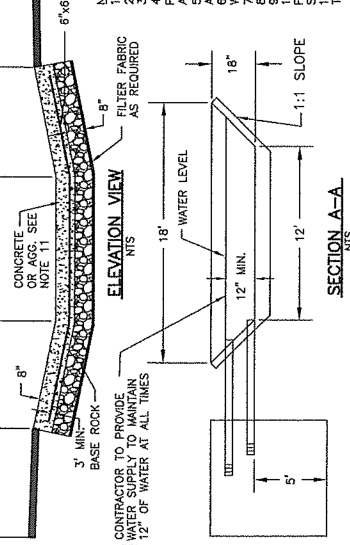

NO.	REVISIONS	DATE	BY

DWG: E-15

Department of Public Works — CLARK COUNTY WASHINGTON — proud past, promising future

WHEEL WASH — APPROVED — COUNTY ENGINEER — DATE

STANDARD E-15 — PLAN No. — DESIGNED SCH — DRAWN SCH — DATE 08/15/02

STANDARD NOTES FOR EROSION CONTROL PLAN (CONTINUED)

13. All conveyance channels, both temporary and permanent shall be stabilized to prevent erosion of the channel. Stabilization shall extend to areas at outlets and downstream reaches vulnerable to erosion resulting from flow discharging from the channel.

14. If BMP's shown are utilized but are insufficient to prevent sediment from reaching water bodies, adjacent properties, or public rights-of-way; additional BMP's shall be implemented immediately to prevent further encroachment of sediment.

15. Stabilized areas shall be provided for employee parking and storage of construction materials. Erodeable stockpiles of earthen materials, such as topsoil, silty and clayey soils; and landscape materials, shall be covered when not being incorporated in the work. Erosion control BMP's shall be utilized as necessary to prevent sediment laden runoff from leaving or sediment being transported from these areas from vehicle activity.

16. All pollutants other than sediment that occur during construction shall be handled and disposed of in a manner that does not cause contamination of storm water.

17. The Contractor shall keep an inspection log of the condition of the erosion control facilities. Erosion control facilities shall be inspected at least weekly and after each rainfall. The inspection log shall be kept at the project site at a designated location and shall be available for review by the County. An individual that has successfully completed the County's Erosion Control Certification course shall perform inspections and maintain the log.

18. All temporary BMP's shall be removed within 30 days after final site stabilization is achieved. Trapped sediment shall be deposited and stabilized on site. Areas disturbed resulting from removal shall be permanently stabilized.

19. Construction shall not be considered complete and acceptable until all disturbed soil surfaces have been protected from erosion with permanent landscaping, covering with impervious surfaces, restored to original undisturbed condition or permanently stabilized.

20. Vegetated stabilization and landscaping shall be fertilized, watered and maintained to insure that growth of vegetation is established and sustained.

21. During dry weather construction periods the contractor shall provide project-specific dust control measures that may include: Seeding, Mulching, Matting, Water, Tackifier, or Chemical Soil Stabilizers. The contractor shall maintain the dust control measures through dry weather periods until all disturbed areas have been stabilized. Immediately re-stabilize areas disturbed by contractor's operations or other activities (wind, water, vandalism, etc.).

NOTE:
SIGNIFICANT VARIATION AND DEGREE OF EROSION CONTROL EFFORT IS DICTATED BY WEATHER CONDITIONS. THE DEVELOPER AND CONTRACTOR SHOULD BE PREPARED TO PROVIDE EXTRA EROSION CONTROL PROVISIONS AND EFFORT DURING WINTER AND WET WEATHER CONDITIONS BEYOND THAT NORMALLY REQUIRED DURING SUMMER AND DRY WEATHER CONDITIONS. FINE GRAINED AND UNCONSOLIDATED SOILS ON SLOPING SITES MAY BECOME UNSTABLE WHEN SUBJECT TO EXCESSIVE MOISTURE.

NO.	REVISIONS	DATE	BY

DWG: ECN2.DWG

Department of Public Works — CLARK COUNTY WASHINGTON — proud past, promising future

STANDARD NOTES (CONTINUED) FOR EROSION CONTOL PLAN — APPROVED — COUNTY ENGINEER — DATE

STANDARD ECN2 — PLAN No. — DESIGNED SCH — DRAWN SCH — DATE 07/07/03

DESIGNED	BAK
DRAWN	BAK
CRP	311022
HOR.	NA
VERT.	NA
DATE	1/16/04
DWG:	EC3
SHEET 23	OF 93

CALL 48 HOURS BEFORE YOU DIG
1-800-553-4344
"It's the Law"
NORTHWEST UTILITIES NOTIFICATION CENTER

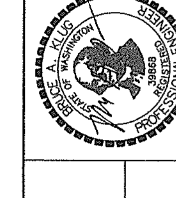

EXPIRES: APRIL 7, 2004
2-17-04

DESIGN & ENGINEERING DIVISION
DESIGN SECTION

NE 76TH ST (SR-503 TO NE 147TH AVE)
EROSION CONTROL DETAILS

CLARK COUNTY WASHINGTON — proud past, promising future

WALL 1

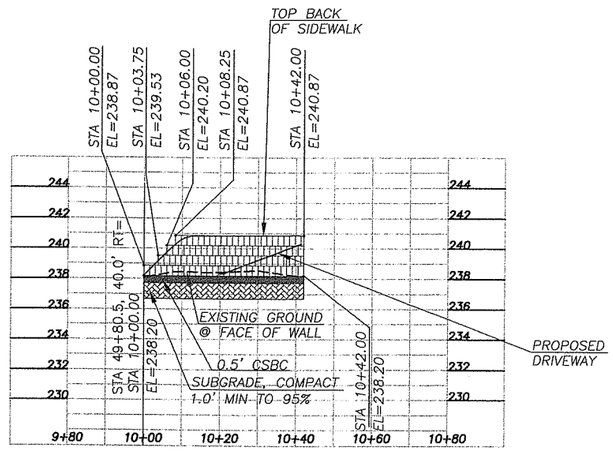

WALL 2

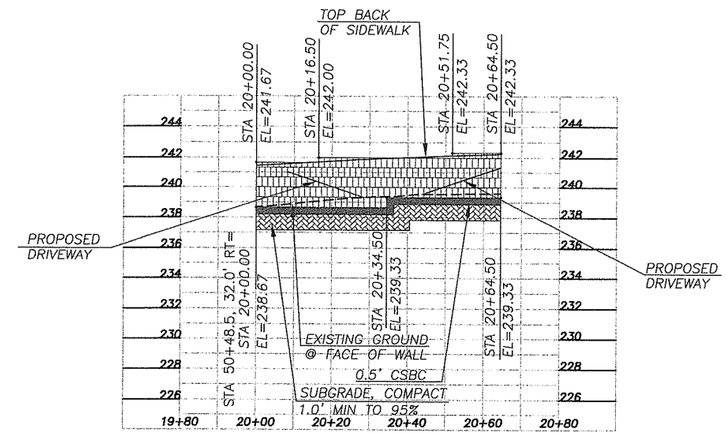

NOTE:
USE COMPACT BLOCKS FOR TOP 2 LAYERS
TO ALLOW FOR SIDEWALK CONSTRUCTION

WALL 3

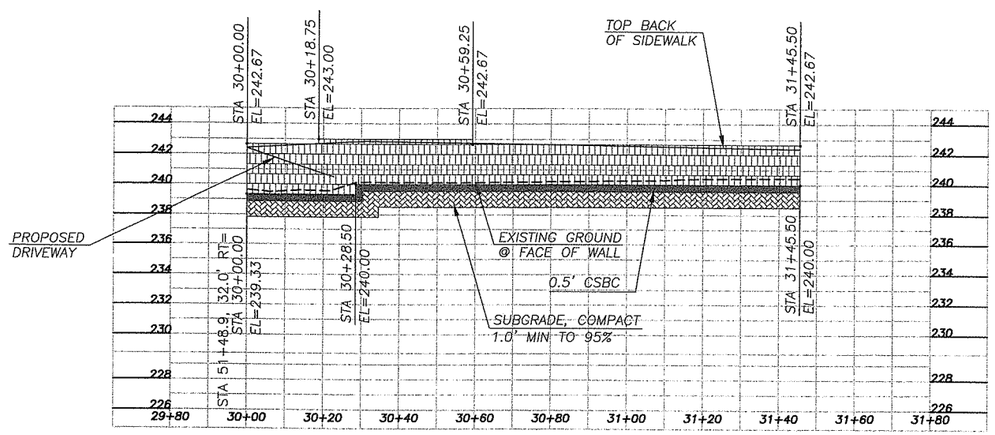

WALL 4

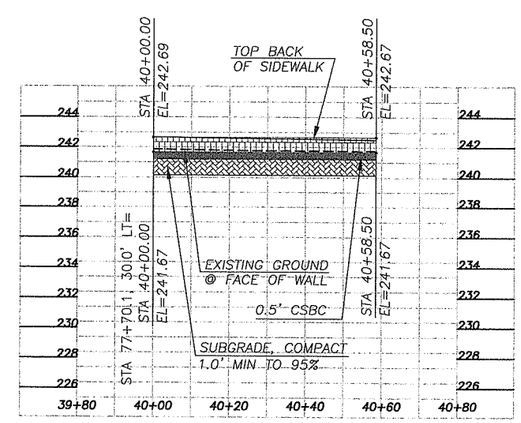

SCALE

HOR. 1"=20'
VER. 1"=5'

DESIGNED	BAK
DRAWN	BAK
CRP	311022
HOR.	1"=20'
VERT.	1"=5'
DATE	1/16/04
DWG:	W01
SHEET 24	OF 93

CALL 48 HOURS BEFORE YOU DIG
1-800-553-4344
"It's the Law"
NORTHWEST UTILITIES NOTIFICATION CENTER

STATE OF WASHINGTON
JAMES A. KLEE
38688
REGISTERED PROFESSIONAL ENGINEER
EXPIRES APRIL 7, 2004
2-17-04

DESIGN & ENGINEERING DIVISION
DESIGN SECTION

NE 76TH ST (SR-503 TO NE 147TH AVE)
RETAINING WALL PROFILES

proud past, promising future
CLARK COUNTY
WASHINGTON

Base Leveling Pad Notes:

1. The leveling pad is to be constructed of crushed stone or 2,000 psi± unreinforced concrete
2. The base foundation is to be approved by the site geotechnical engineer prior to placement of the leveling pad.

Standard Unit	
Width:	18"
*Depth:	21 1/2"
Height:	8"
*Weight:	125 lbs

Cap Unit	
Width:	18"
*Depth:	10 1/2"
Height:	4"
*Weight:	50 lbs

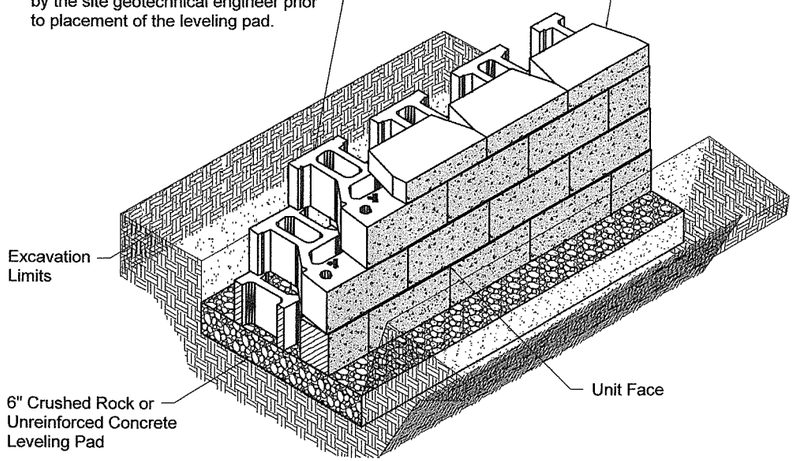

Standard Unit/Base Pad Isometric Section View

*Dimensions & Weight May Vary by Region

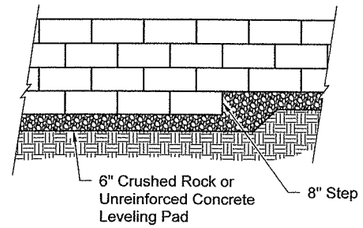

Elevation

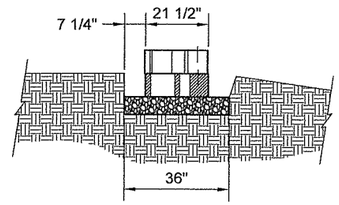

Section

Leveling Pad Detail

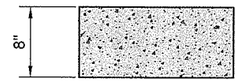

Standard Elevation

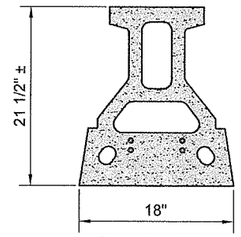

Standard Plan

Standard Unit

*Dimensions May Vary by Region

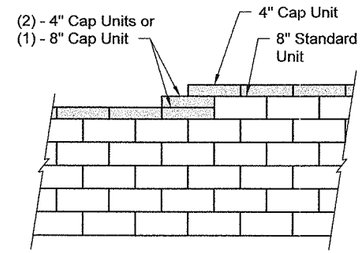

Top of Wall Steps

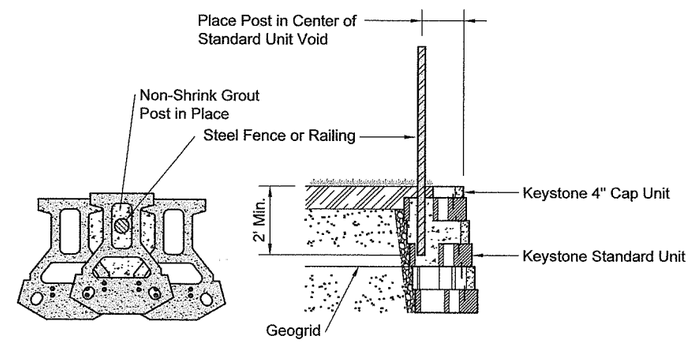

Fence Section & Plan Detail

Standard Unit - 1" Setback

Note:

1. Check with manufacturer specifications on correct direction of orientation for geogrid to obtain proper strength.

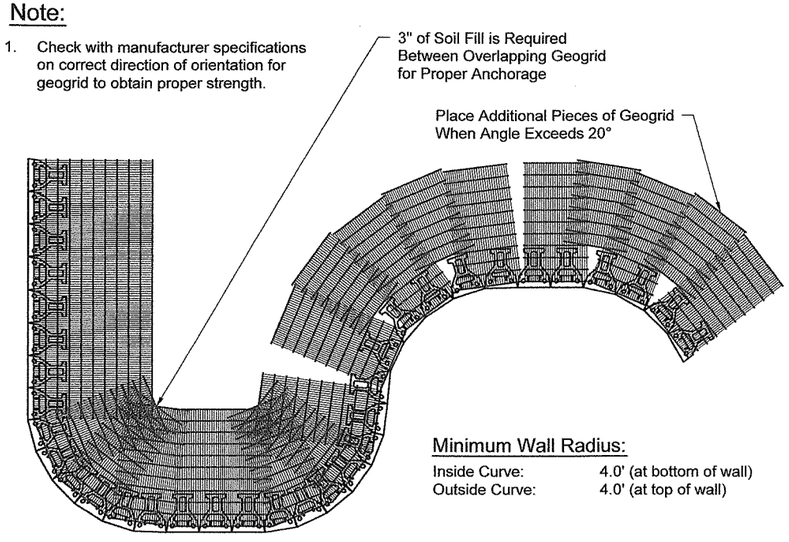

Minimum Wall Radius:

Inside Curve:	4.0' (at bottom of wall)
Outside Curve:	4.0' (at top of wall)

Geogrid Installation on Curves

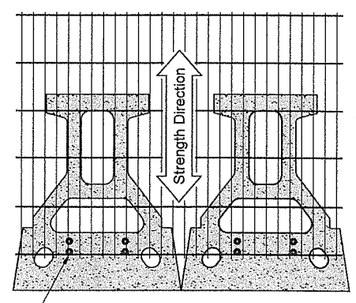

Geogrid is to be Placed on Level Backfill and Extended Over the Fiberglass Pins. Place Next Unit. Pull Grid Taught and Backfill. Stake as required.

Grid & Pin Connection

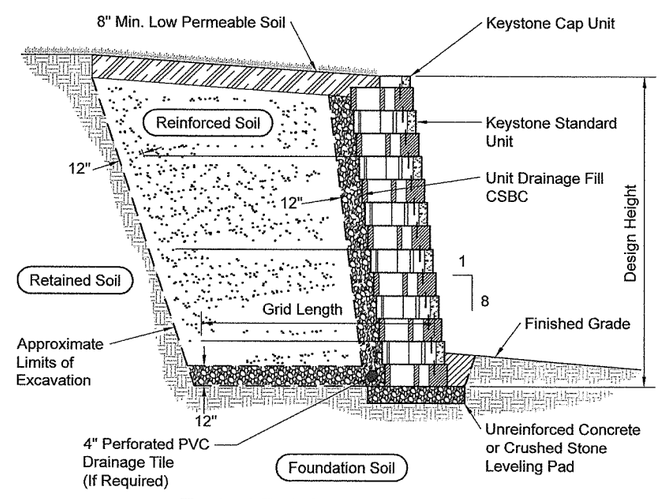

Typical Reinforced Wall Section

Standard Unit - 1" Setback

Keystone or Equivalent

DESIGNED	BAK
DRAWN	BAK
CRP	311022
HOR.	NA
VERT.	NA
DATE	1/16/04
DWG:	W02
SHEET 25	OF 93

CALL 48 HOURS BEFORE YOU DIG 1-800-553-4344 "It's the Law" NORTHWEST UTILITIES NOTIFICATION CENTER

EXPIRES APRIL 7, 2004 2-17-04

DESIGN & ENGINEERING DIVISION
DESIGN SECTION

NE 76TH ST (SR-503 TO NE 147TH AVE)
RETAINING WALL DETAILS

proud past, promising future
CLARK COUNTY WASHINGTON

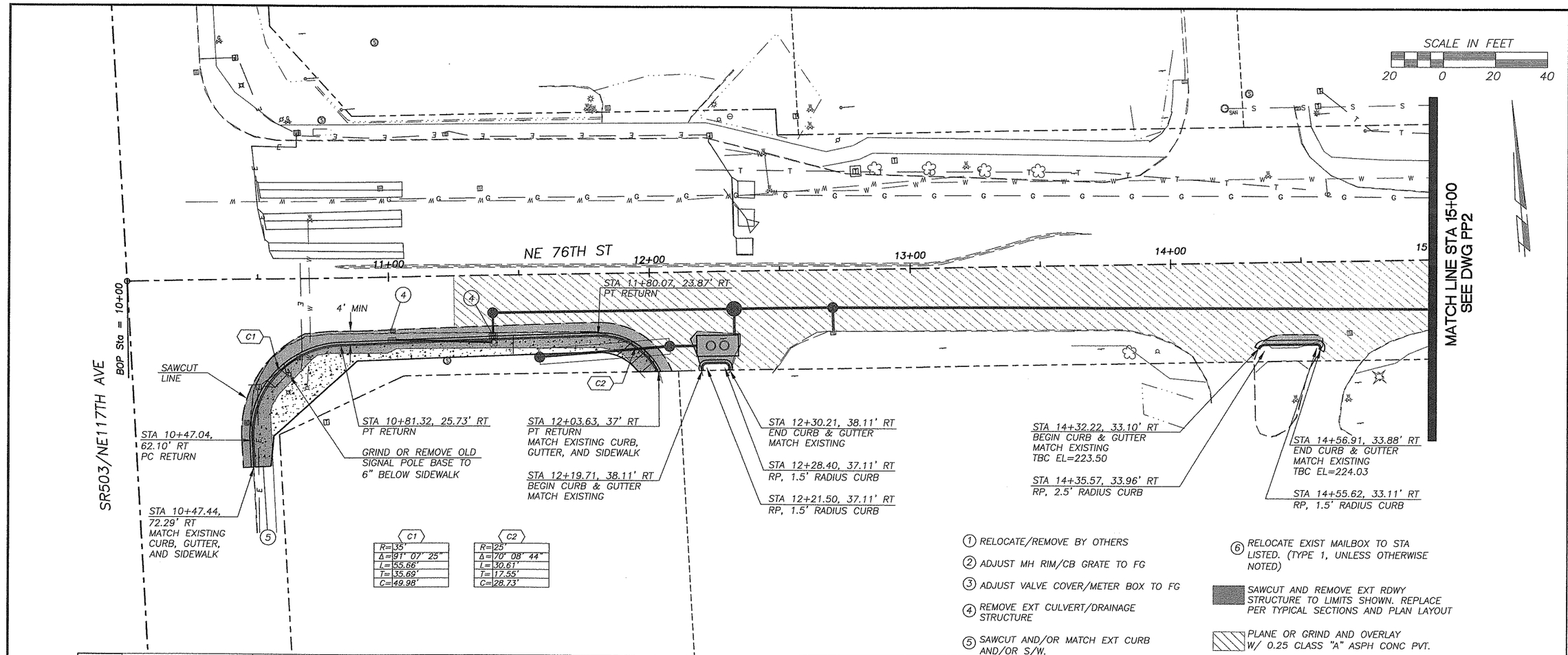

C1	
R=	35'
Δ=	91° 07' 25"
L=	55.66'
T=	35.69'
C=	49.98'

C2	
R=	25'
Δ=	70° 08' 44"
L=	30.61'
T=	17.55'
C=	28.73'

UNADJUSTED EARTHWORK QUANTITIES

EXCAVATION	250 CY
EMBANKMENT	2 CY

DESIGNED	BAK
DRAWN	BAK
CRP	311022
HOR.	1"=20'
VERT.	1"=5'
DATE	1/16/04
DWG:	PP1
SHEET 26 OF 93	

CALL 48 HOURS BEFORE YOU DIG 1-800-553-4344 "It's the Law" NORTHWEST UTILITIES NOTIFICATION CENTER

STATE OF WASHINGTON BRUCE A. KILGO 36868 REGISTERED PROFESSIONAL ENGINEER EXPIRES: APRIL 7, 2004 2-17-04

DESIGN & ENGINEERING DIVISION
DESIGN SECTION

NE 76TH ST (SR-503 TO NE 147TH AVE)
PLAN & PROFILE B.O.P. TO STA 15+00

proud past, promising future
CLARK COUNTY WASHINGTON

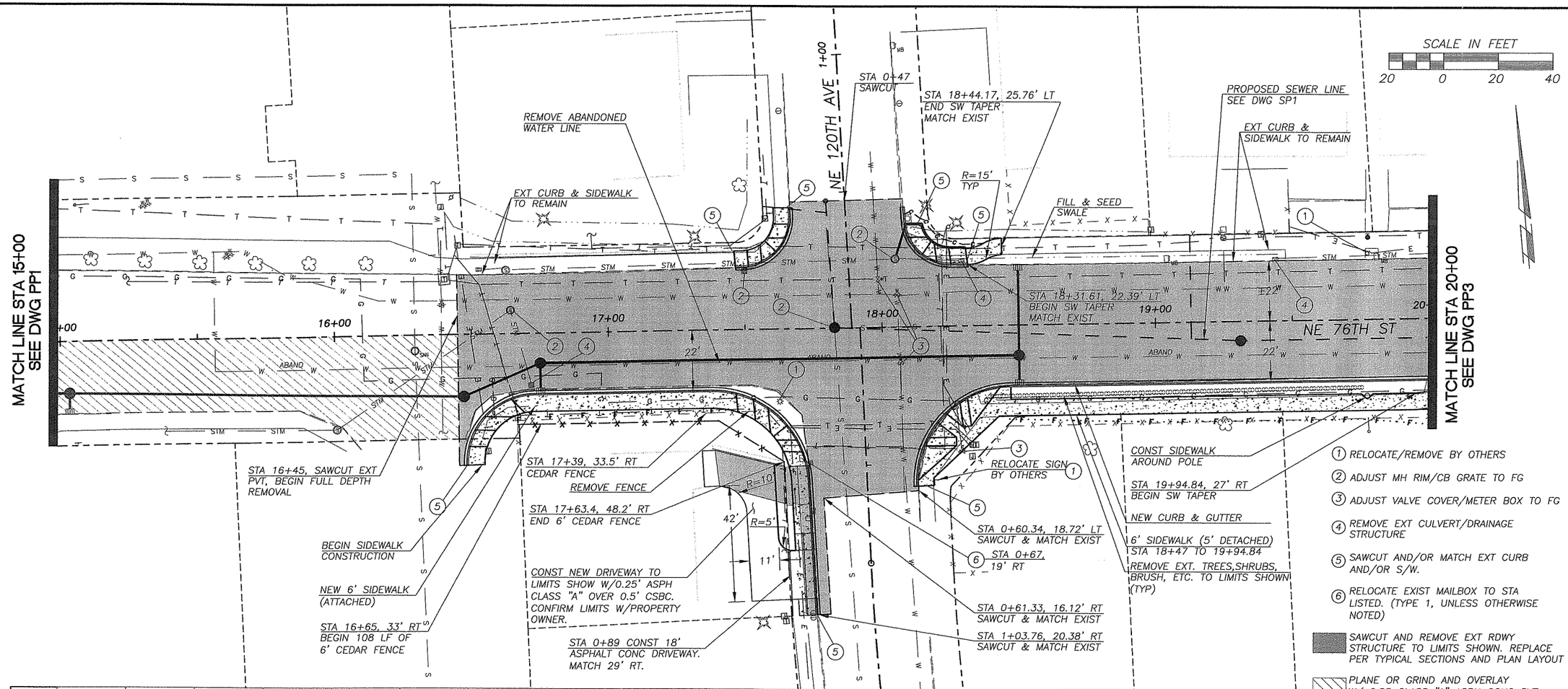

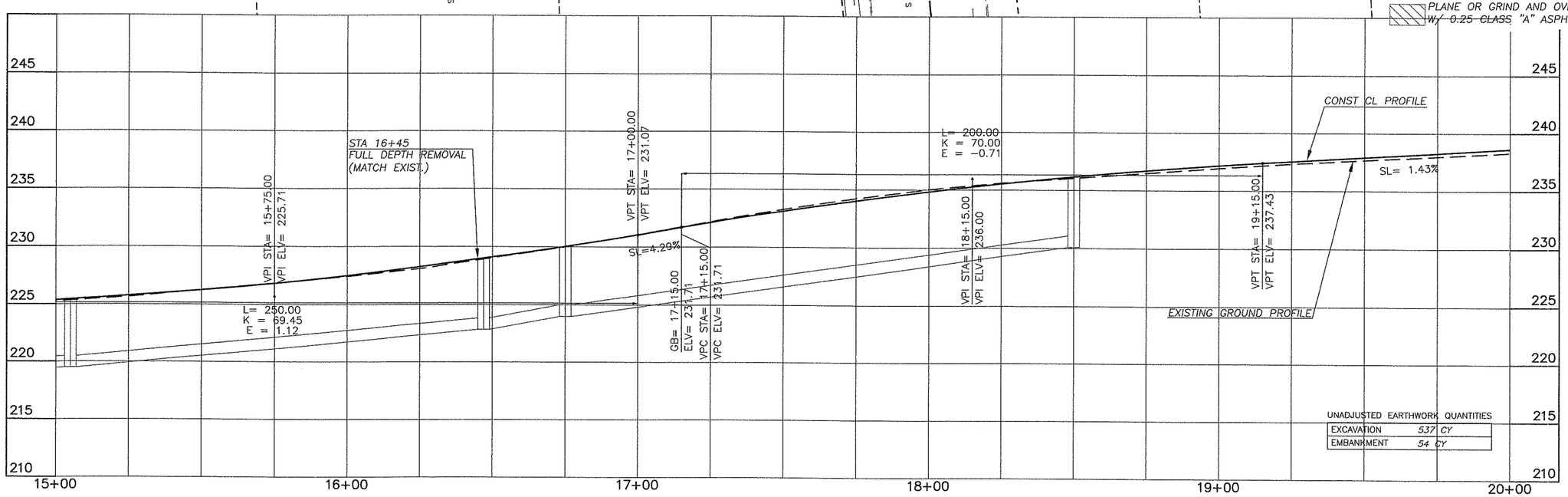

UNADJUSTED EARTHWORK QUANTITIES

EXCAVATION	537 CY
EMBANKMENT	54 CY

DESIGNED BAK
DRAWN BAK
CRP 311022
HOR. 1"=20'
VERT. 1"=5'
DATE 1/16/04
DWG: PP2
SHEET 27 OF 93

CALL 48 HOURS BEFORE YOU DIG 1-800-553-4344 "It's the Law" NORTHWEST UTILITIES NOTIFICATION CENTER

STATE OF WASHINGTON KELLY J. BROWN 32868 REGISTERED PROFESSIONAL ENGINEER EXPIRES APRIL 7, 2004

DESIGN & ENGINEERING DIVISION
DESIGN SECTION

NE 76TH ST (SR-503 TO NE 147TH AVE)
PLAN & PROFILE STA 15+00 TO STA 20+00

proud past, promising future
CLARK COUNTY WASHINGTON

1. RELOCATE/REMOVE BY OTHERS
2. ADJUST MH RIM/CB GRATE TO FG
3. ADJUST VALVE COVER/METER BOX TO FG
4. REMOVE EXT CULVERT/DRAINAGE STRUCTURE
5. SAWCUT AND/OR MATCH EXT CURB AND/OR S/W.
6. RELOCATE EXIST MAILBOX TO STA LISTED. (TYPE 1, UNLESS OTHERWISE NOTED)

SAWCUT AND REMOVE EXT RDWY STRUCTURE TO LIMITS SHOWN. REPLACE PER TYPICAL SECTIONS AND PLAN LAYOUT

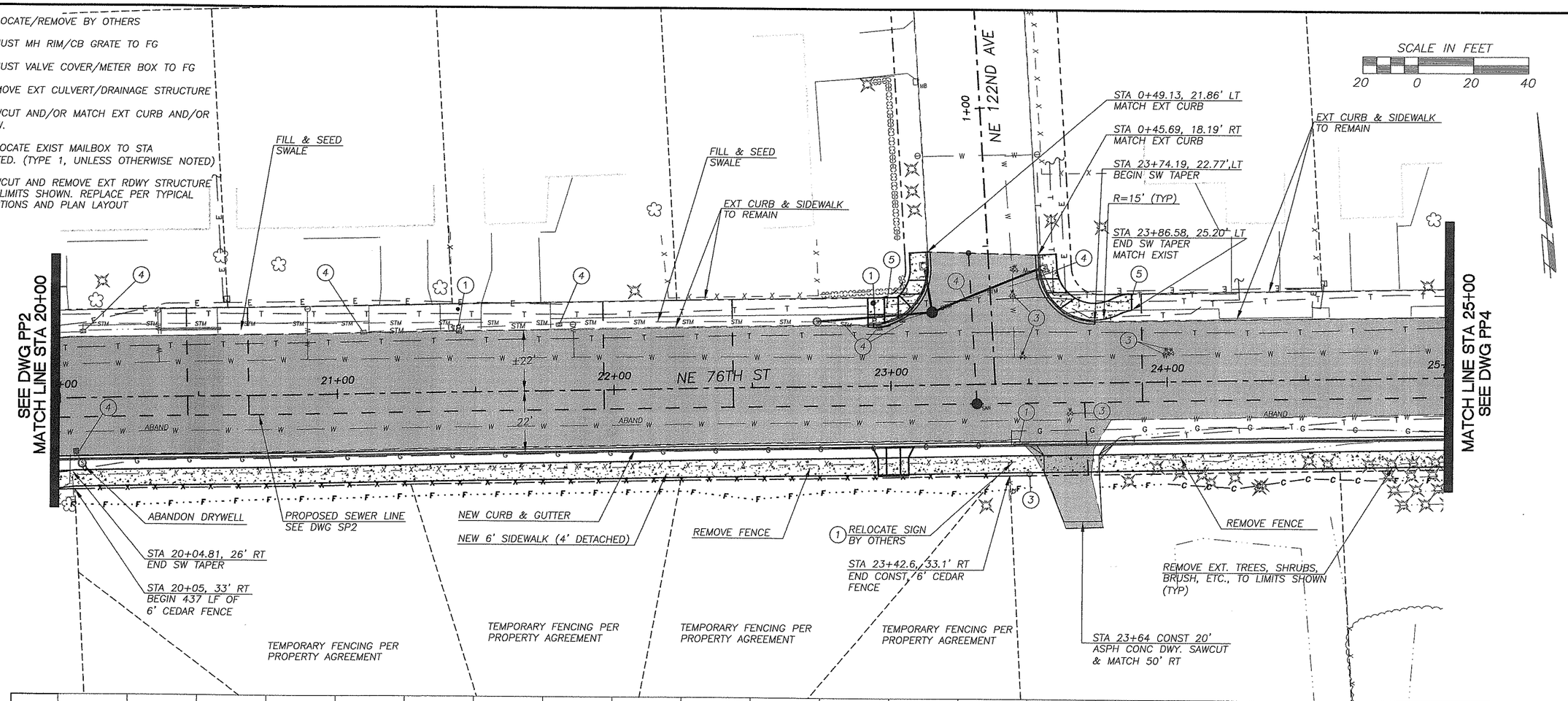

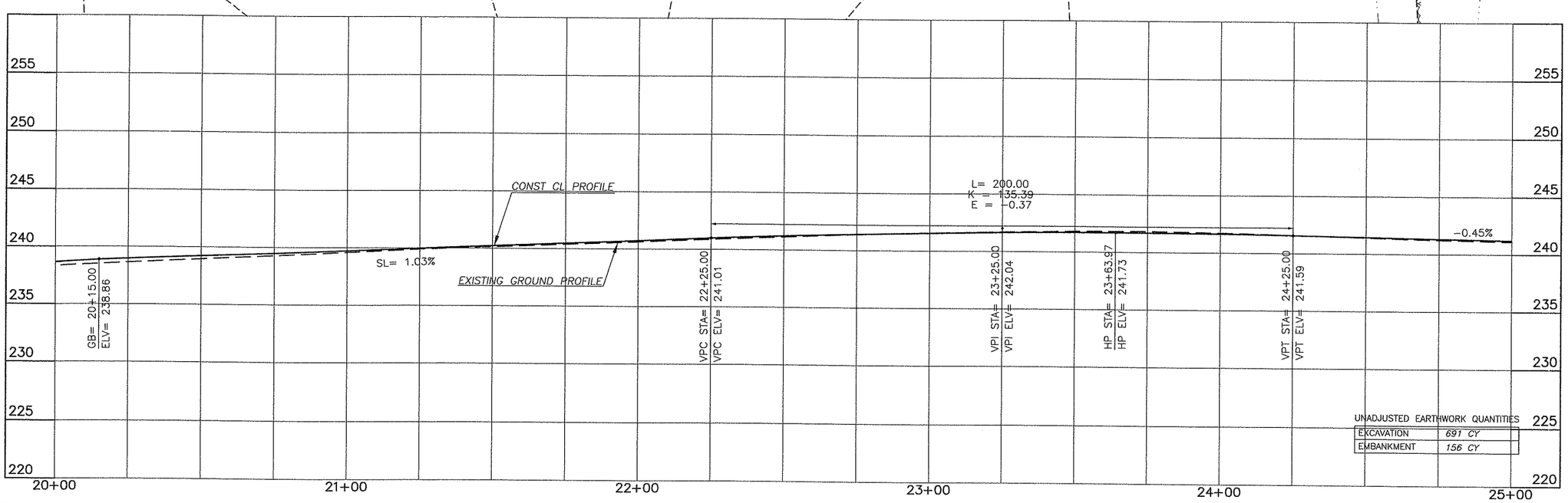

UNADJUSTED EARTHWORK QUANTITIES

EXCAVATION	691 CY
EMBANKMENT	156 CY

DESIGNED	BAK
DRAWN	BAK
CRP	31/1022
HOR.	1"=20'
VERT.	1"=5'
DATE	1/16/04
DWG.	PP3
SHEET 28	OF 93

CALL 48 HOURS BEFORE YOU DIG 1-800-553-4344 "It's the Law" NORTHWEST UTILITIES NOTIFICATION CENTER

DAVID A. KILLIG STATE OF WASHINGTON 13868 REGISTERED PROFESSIONAL ENGINEER EXPIRES: APRIL 7, 2004 7-17-04

DESIGN & ENGINEERING DIVISION
DESIGN SECTION

NE 147TH AVE)
NE 76TH ST (SR-503 TO NE
PLAN & PROFILE STA 20+00 TO STA 25+00

proud past, promising future
CLARK COUNTY WASHINGTON

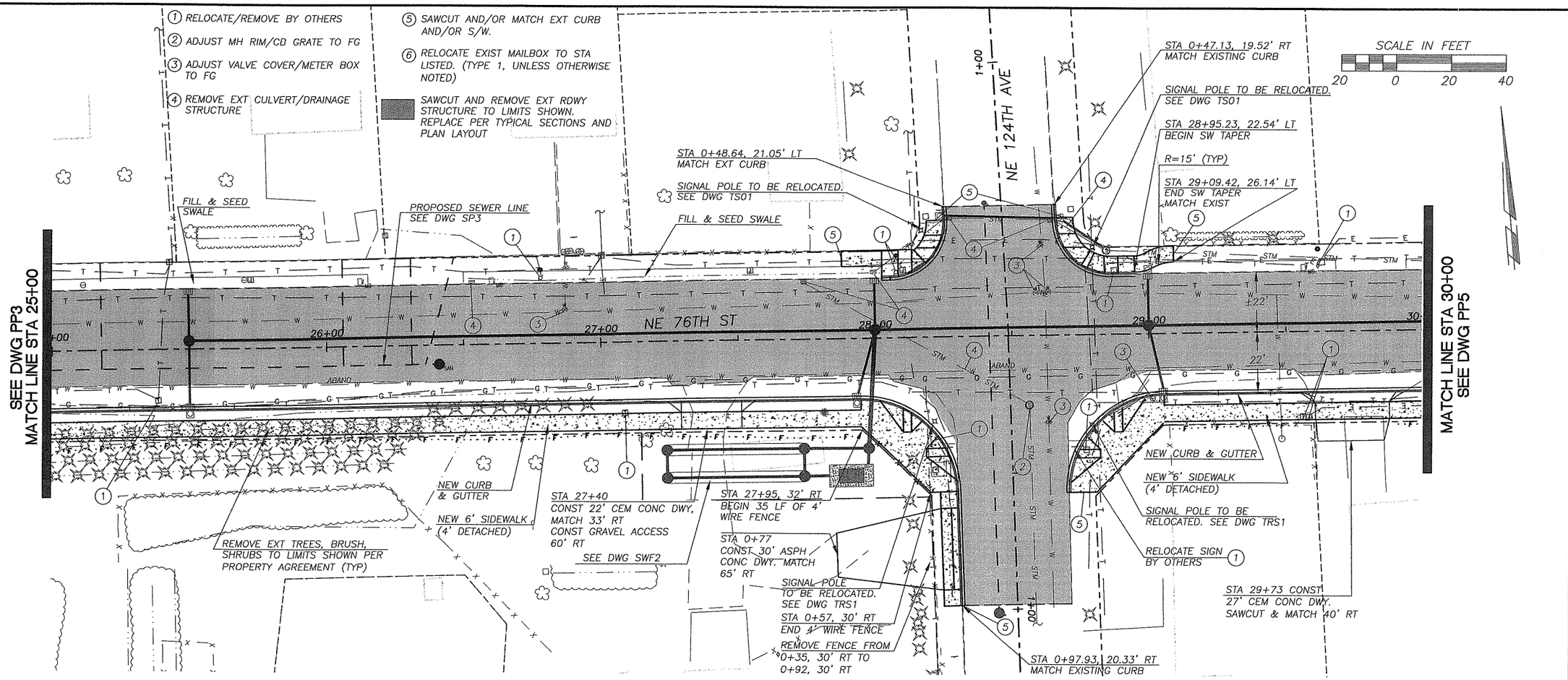

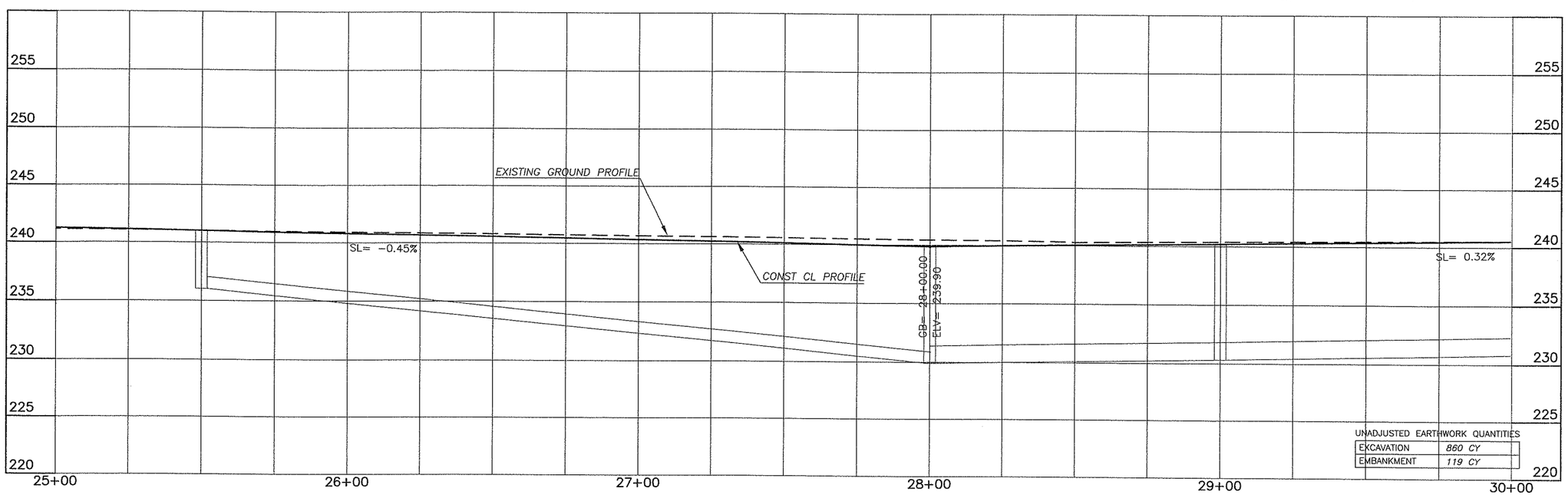

UNADJUSTED EARTHWORK QUANTITIES

EXCAVATION	860 CY
EMBANKMENT	119 CY

DESIGNED	BAK
DRAWN	BAK
CRP	311022
HOR.	1"=20'
VERT.	1"=5'
DATE	1/16/04
DWG:	PP4
SHEET 29	OF 93

CALL 48 HOURS BEFORE YOU DIG 1-800-553-4344 "It's the Law" NORTHWEST UTILITIES NOTIFICATION CENTER

STEVEN G. KILLEN WASHINGTON 39588 REGISTERED PROFESSIONAL ENGINEER EXPIRES: APRIL 7, 2004 2-17-04

DESIGN & ENGINEERING DIVISION
DESIGN SECTION

NE 76TH ST (SR-503 TO NE 147TH AVE)
PLAN & PROFILE STA 25+00 TO STA 30+00

proud past, promising future
CLARK COUNTY WASHINGTON

1. RELOCATE/REMOVE BY OTHERS
2. ADJUST MH RIM/CB GRATE TO FG
3. ADJUST VALVE COVER/METER BOX TO FG
4. REMOVE EXT CULVERT/DRAINAGE STRUCTURE
5. SAWCUT AND/OR MATCH EXT CURB AND/OR S/W.
6. RELOCATE EXIST MAILBOX TO STA LISTED. (TYPE 1, UNLESS OTHERWISE NOTED)

SAWCUT AND REMOVE EXT RDWY STRUCTURE TO LIMITS SHOWN. REPLACE PER TYPICAL SECTIONS AND PLAN LAYOUT

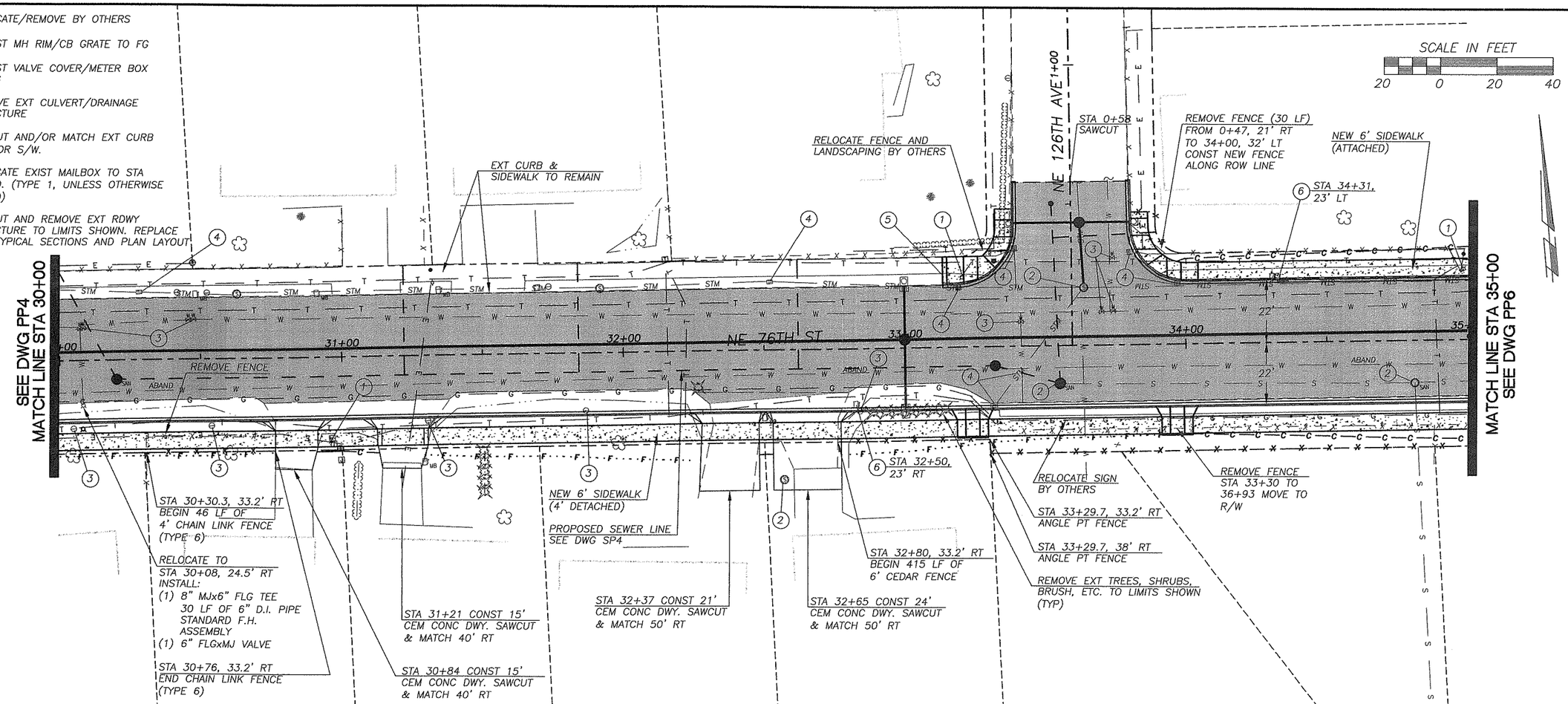

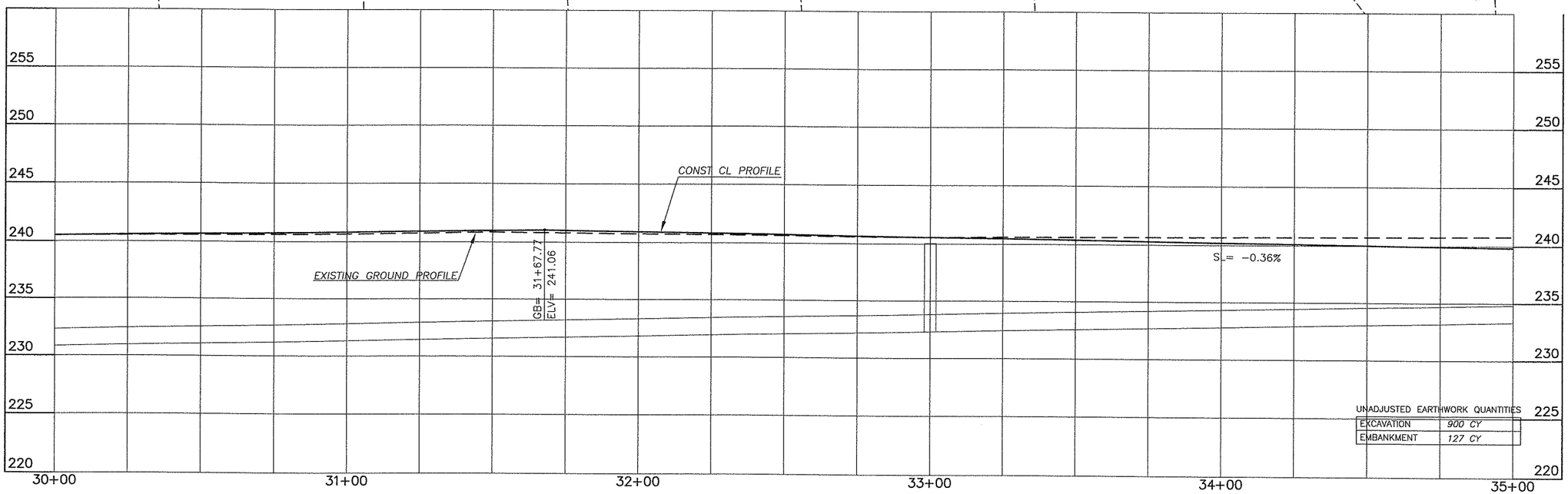

UNADJUSTED EARTHWORK QUANTITIES

EXCAVATION	900 CY
EMBANKMENT	127 CY

DESIGNED	BAK
DRAWN	BAK
CRP	311022
HOR.	1"=20'
VERT.	1"=5'
DATE	1/16/04
DWG.	PP5
SHEET 30	OF 93

CALL 48 HOURS BEFORE YOU DIG 1-800-553-4344 "It's the Law" NORTHWEST UTILITIES NOTIFICATION CENTER

BRUCE A. KILLIS WASHINGTON 36688 REGISTERED PROFESSIONAL ENGINEER
EXPIRES: APRIL 7, 2004
2-17-04

DESIGN & ENGINEERING DIVISION
DESIGN SECTION

NE 76TH ST (SR-503 TO NE 147TH AVE)
PLAN & PROFILE STA 30+00 TO STA 35+00

proud past, promising future
CLARK COUNTY WASHINGTON

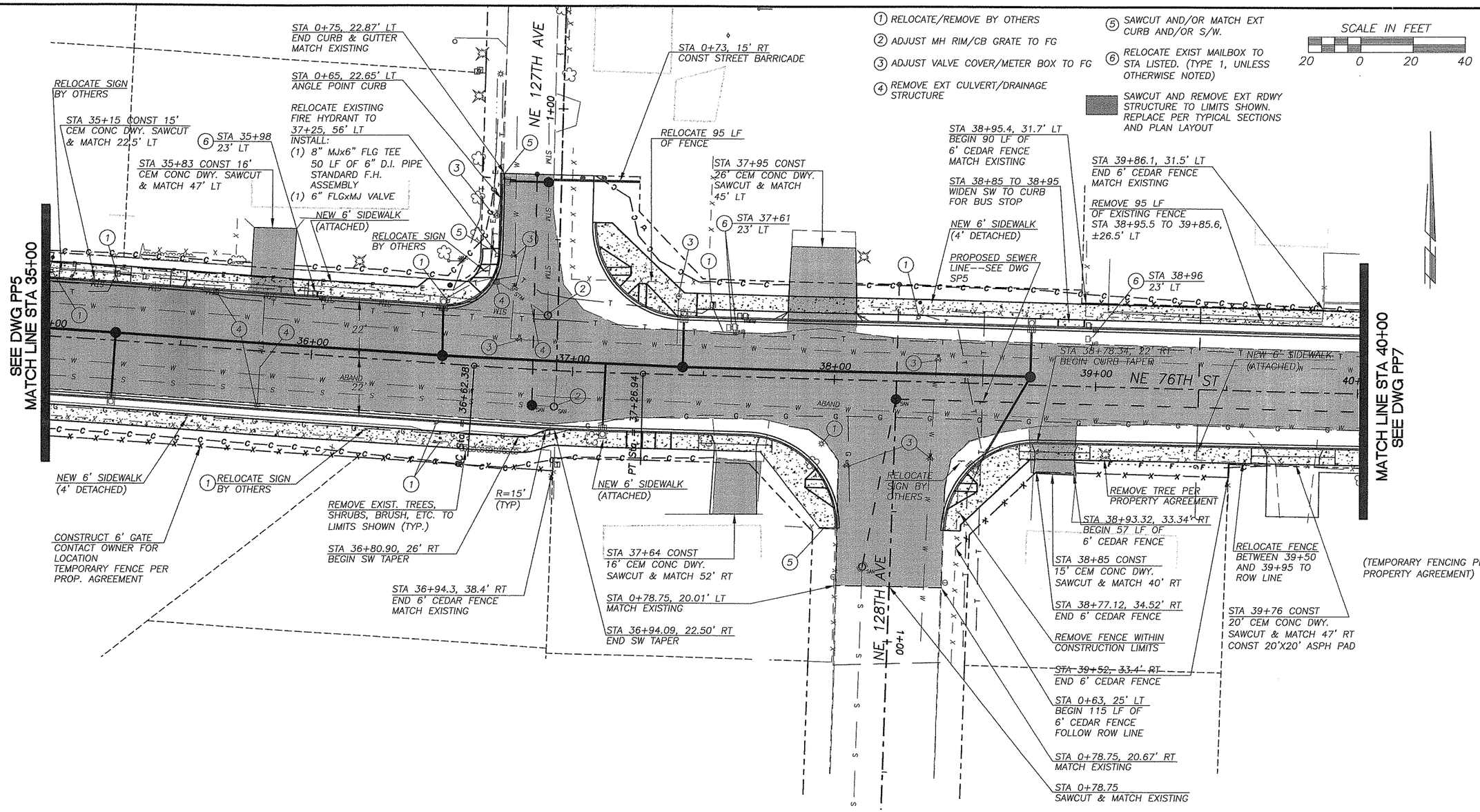

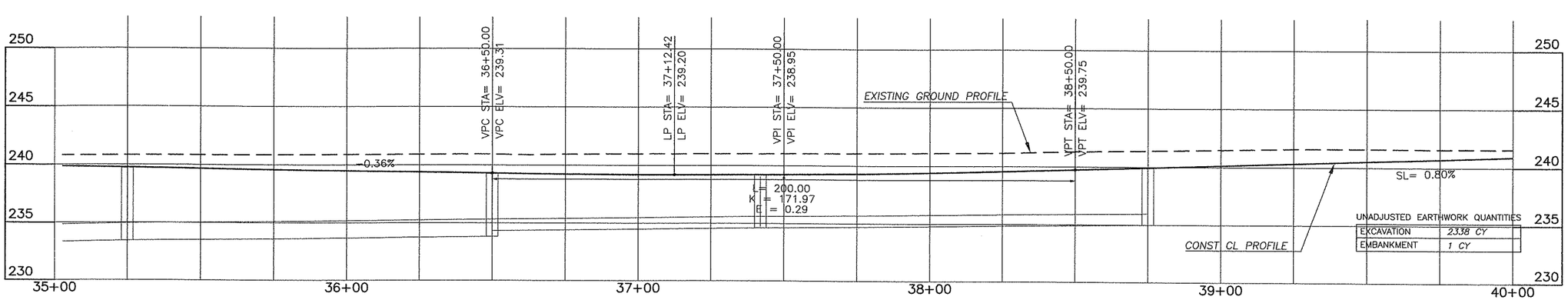

UNADJUSTED EARTHWORK QUANTITIES

EXCAVATION	2338 CY
EMBANKMENT	1 CY

DESIGNED	BAK
DRAWN	BAK
CRP	311022
HOR.	1"=20'
VERT.	1"=5'
DATE	1/16/04
DWG:	PP6
SHEET 31	OF 93

CALL 48 HOURS BEFORE YOU DIG
1-800-553-4344
"It's the Law"
NORTHWEST UTILITIES NOTIFICATION CENTER

GEORGE A. ALLEN
STATE OF WASHINGTON
21883
REGISTERED PROFESSIONAL ENGINEER
EXPIRES APRIL 7, 2004
7-7-04

DESIGN & ENGINEERING DIVISION
DESIGN SECTION

NE 76TH ST (SR-503 TO NE 147TH AVE)
PLAN & PROFILE STA 35+00 TO STA 40+00

proud past, promising future
CLARK COUNTY
WASHINGTON

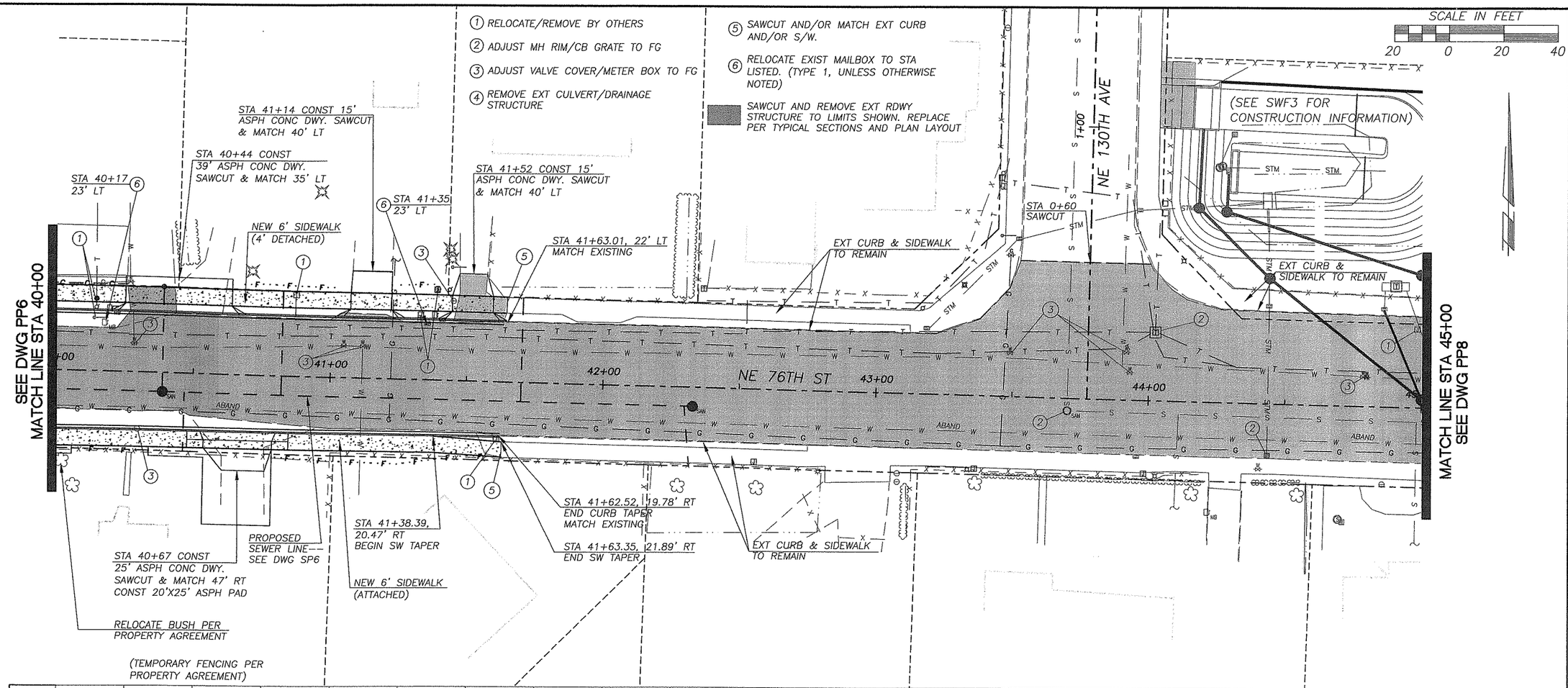

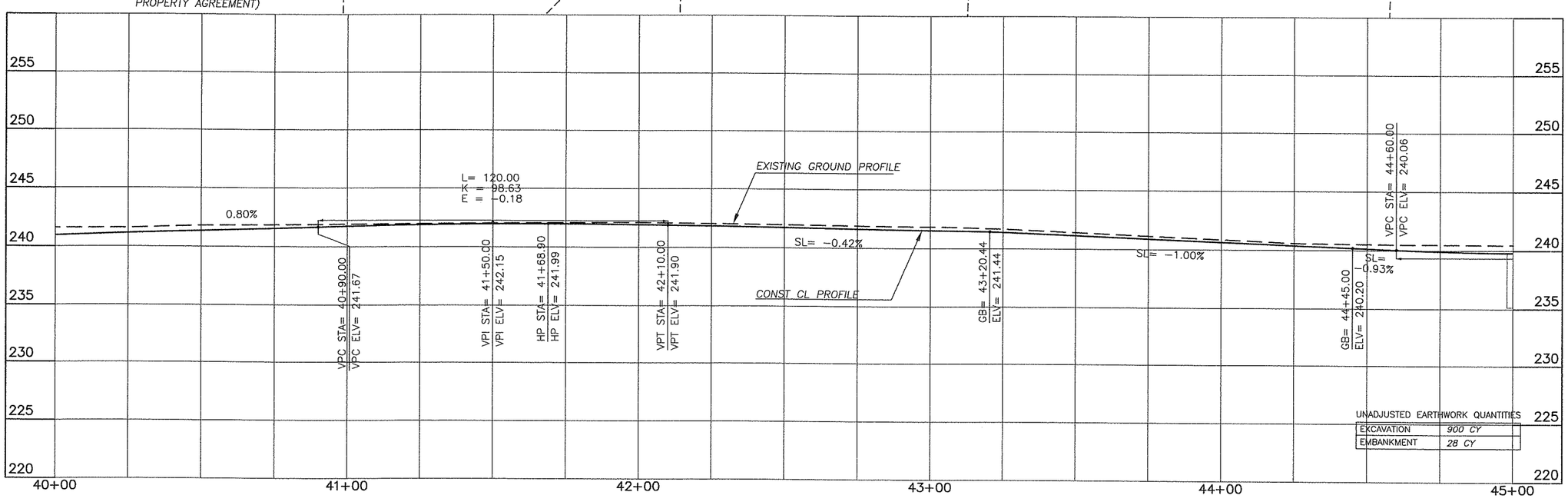

UNADJUSTED EARTHWORK QUANTITIES

EXCAVATION	900 CY
EMBANKMENT	28 CY

DESIGNED	BAK
DRAWN	BAK
CRP	311022
HOR.	1"=20'
VERT.	1"=5'
DATE	1/16/04
DWG:	PP7
SHEET 32	OF 93

CALL 48 HOURS BEFORE YOU DIG 1-800-553-4344 "It's the Law" NORTHWEST UTILITIES NOTIFICATION CENTER

STEVE A. KLIG STATE OF WASHINGTON 19868 REGISTERED PROFESSIONAL ENGINEER
EXPIRES APRIL 7, 2004
2-17-04

DESIGN & ENGINEERING DIVISION
DESIGN SECTION

NE 76TH ST (SR-503 TO NE 147TH AVE)
PLAN & PROFILE STA 40+00 TO STA 45+00

proud past, promising future
CLARK COUNTY WASHINGTON

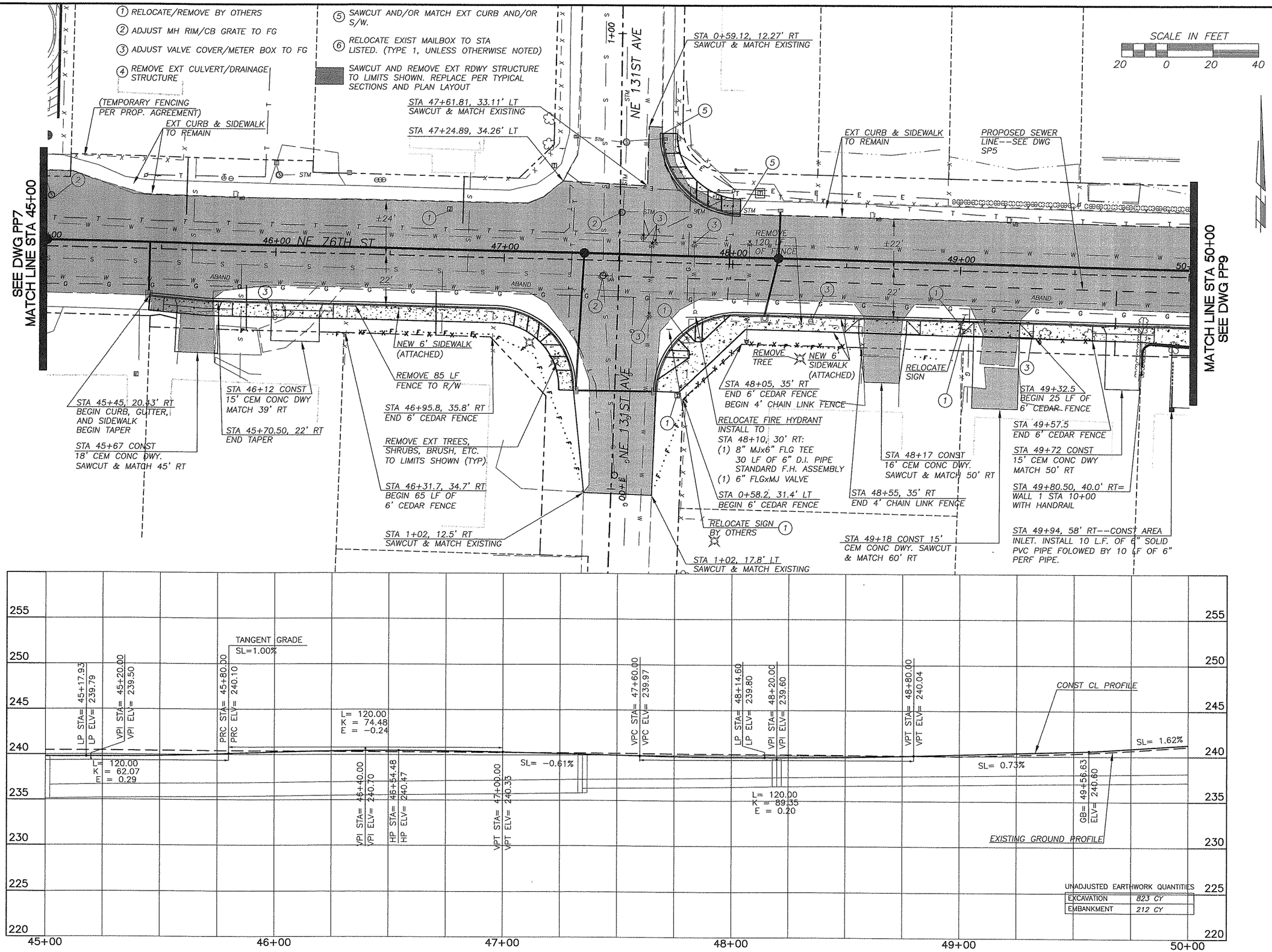

UNADJUSTED EARTHWORK QUANTITIES

EXCAVATION	823 CY
EMBANKMENT	212 CY

DESIGNED	BAK
DRAWN	BAK
CRP	311022
HOR.	1"=20'
VERT.	1"=5'
DATE	1/16/04
DWG:	PP8
SHEET 33	OF 93

CALL 48 HOURS BEFORE YOU DIG 1-800-553-4344 "It's the Law" NORTHWEST UTILITIES NOTIFICATION CENTER

GARY A. KLOG STATE OF WASHINGTON 29885 REGISTERED PROFESSIONAL ENGINEER EXPIRES: APRIL 7, 2004

2-17-04

DESIGN & ENGINEERING DIVISION
DESIGN SECTION

NE 76TH ST (SR-503 TO NE 147TH AVE)
PLAN & PROFILE STA 45+00 TO STA 50+00

proud past, promising future
CLARK COUNTY WASHINGTON

(1) RELOCATE/REMOVE BY OTHERS
(2) ADJUST MH RIM/CB GRATE TO FG
(3) ADJUST VALVE COVER/METER BOX TO FG
(4) REMOVE EXT CULVERT/DRAINAGE STRUCTURE
(5) SAWCUT AND/OR MATCH EXT CURB AND/OR S/W.
(6) RELOCATE EXIST MAILBOX TO STA LISTED. (TYPE 1, UNLESS OTHERWISE NOTED)

SAWCUT AND REMOVE EXT RDWY STRUCTURE TO LIMITS SHOWN. REPLACE PER TYPICAL SECTIONS AND PLAN LAYOUT

SCALE IN FEET
20 0 20 40

SEE DWG PP8
MATCH LINE STA 50+00

MATCH LINE STA 55+00
SEE DWG PP10

NE 76TH ST

NE 133RD AVE

EXT CURB & SIDEWALK TO REMAIN

PROTECT FENCE

STA 51+21.7, 22.3' LT
BEGIN CURB & GUTTER, SIDEWALK. MATCH EXISTING

STA 51+35 CONST 26'
ASPH CONC DWY. SAWCUT & MATCH 40' LT

STA 51+72
23.4' LT

STA 52+51 CONST 35'
CEM CONC DWY. SAWCUT & MATCH 38' LT

REMOVE MAPLE TREE
PER PROPERTY AGREEMENT

STA 52+26
23.4' LT

NEW 6' SIDEWALK
(ATTACHED)

STA 53+31 CONST 15'
ASPH CONC DWY. SAWCUT & MATCH 40' LT

STA 53+10
23.6' LT

STA 53+60.00, 22.73' LT
END CURB & GUTTER
MATCH EXISTING CURB
BEGIN SW TAPER

R=15'
(TYP)

STA 53+76.50, 28.29' LT
END SW TAPER
MATCH EXISTING

EXISTING CURB & GUTTER AND SIDEWALK TO REMAIN

REMOVE 160 LF
OF FENCE

WALL 3–SEE
DWGS W01 & W02
FOR DETAILS

NEW 6' SIDEWALK
(ATTACHED)

STA 51+80.23, 30' RT
WALL 3 ANGLE POINT
END HANDRAIL. BEGIN
CHAIN LINK FENCE

STA 52+94.18, 30' RT
WALL 3 STA 52+94.18
FENCE ANGLE POINT
@ 29.5' RT

STA 52+94.7, 35' RT
FENCE ANGLE POINT

REMOVE EXT TREES,
SHRUBS, BRUSH, ETC.
TO LIMITS SHOWN (TYP)

STA 53+07.6, 48' RT
END FENCE

STA 0+67
27' RT

REMOVE EXT TREES, SHRUBS,
BRUSH, ETC. TO LIMITS
SHOWN (TYP)

NEW 6' SIDEWALK
(ATTACHED)

RELOCATE SIGN
BY OTHERS

STA 54+87.42, 35' RT
BEGIN 173 LF OF 6'
CEDAR FENCE

HOUSE TO BE
REMOVED BY
OTHERS

SEE PP17 FOR
PROFILE

STA 1+15, 8.7' RT & 10' LT
SAWCUT & MATCH EXISTING

STA 50+30 CONST
24' ASPH CONC DWY.
SAWCUT & MATCH 58' RT.

STA 50+48.49, 32' RT
BEGIN WALL 2, STA 20+00
BEGIN HANDRAIL @ 31' RT

STA 50+66, 59' RT
CONST AREA INLET
INSTALL 10 L.F. OF 6"
SOLID PVC PIPE FOLLOWED
BY 10 LF OF 6" PERF PIPE.

WALL 2--SEE DWGS W01 &
W02 FOR DETAILS

STA 50+12.50, 32' RT
END WALL 1 @ 31' RT
END HANDRAIL

STA 51+12.87,
32' RT
END WALL 2
END HANDRAIL @
31' RT

STA 50+92, 58' RT
CONST AREA INLET
INSTALL 10 L.F. OF
6" SOLID PVC PIPE
FOLOWED BY 10 LF
OF 6" PERF PIPE.

STA 51+71, 55' RT CONST AREA INLET
INSTALL 10 LF OF 6" SOLID PVC PIPE
FOLLOWED BY 10 LF OF 6" PERF PIPE.

STA 51+48.87, 32' RT
BEGIN WALL 3, STA 30+00
BEGIN HANDRAIL @ 31' RT

STA 51+31 CONST 24' ASPH CONC
DWY. SAWCUT & MATCH 58' RT.

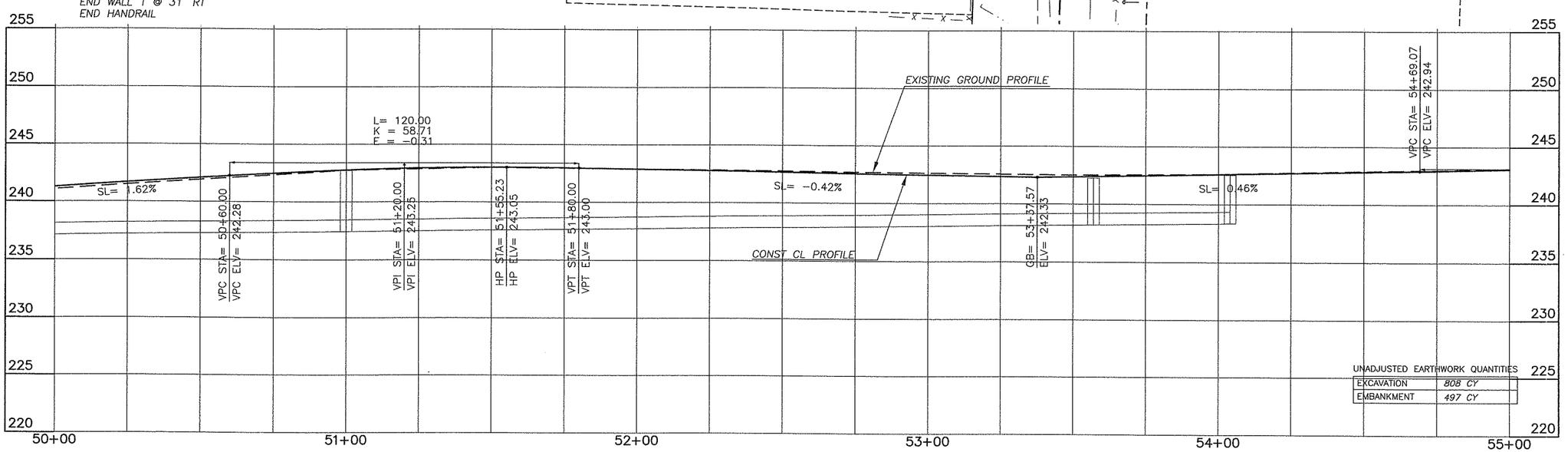

UNADJUSTED EARTHWORK QUANTITIES

EXCAVATION	808 CY
EMBANKMENT	497 CY

DESIGNED	BAK
DRAWN	BAK
CRP	311022
HOR.	1"=20'
VERT.	1"=5'
DATE	1/16/04
DWG:	PP9
SHEET 34	OF 93

CALL 48 HOURS BEFORE YOU DIG
1-800-553-4344
"It's the Law"
NORTHWEST UTILITIES NOTIFICATION CENTER

STATE OF WASHINGTON
JULIE A. SCHMIDT
36885
REGISTERED PROFESSIONAL ENGINEER
EXPIRES: APRIL 7, 2004
2-19-04

DESIGN & ENGINEERING DIVISION
DESIGN SECTION

NE 76TH ST (SR-503 TO NE 147TH AVE)
PLAN & PROFILE STA 50+00 TO STA 55+00

proud past, promising future
CLARK COUNTY
WASHINGTON

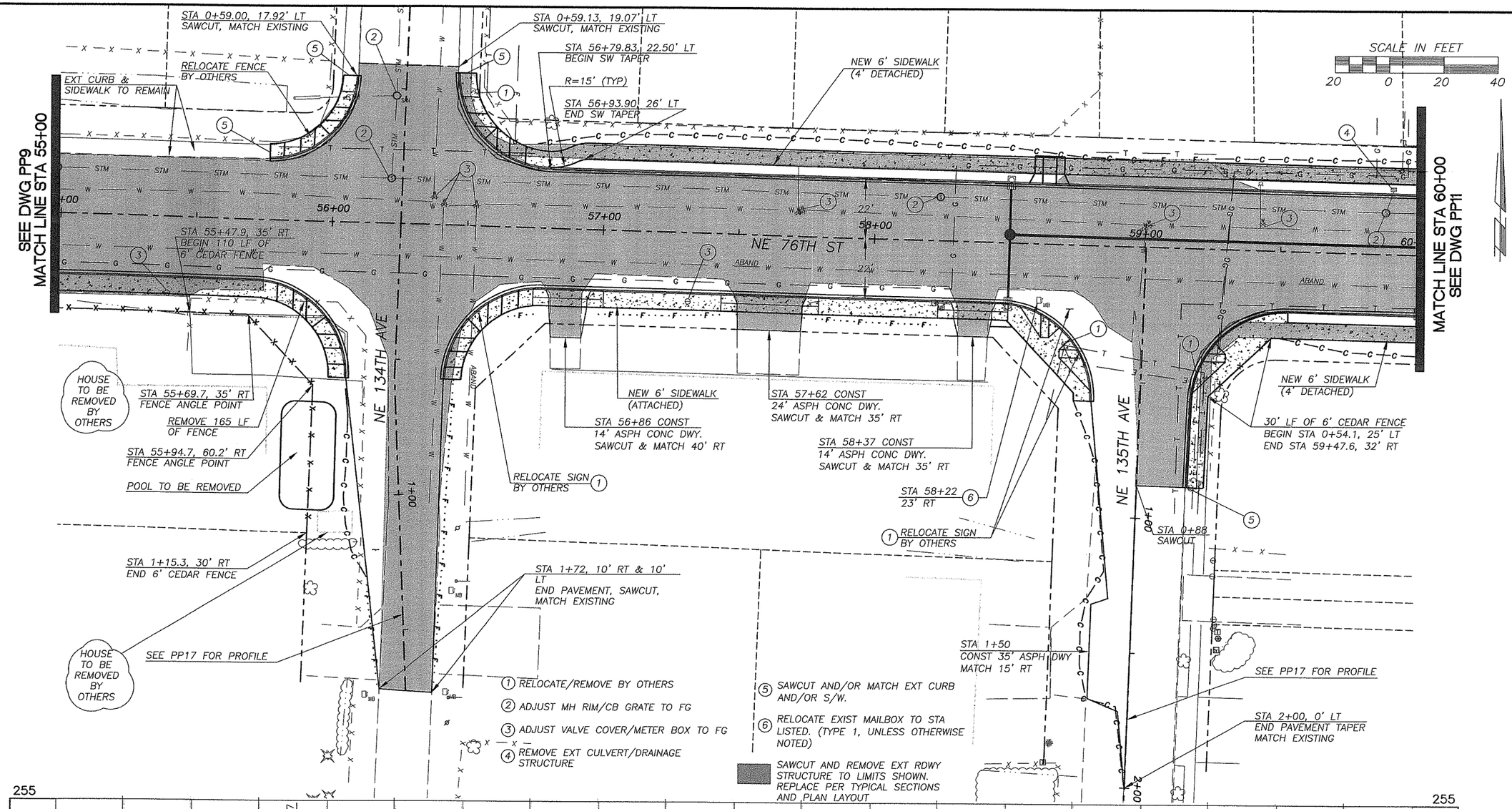

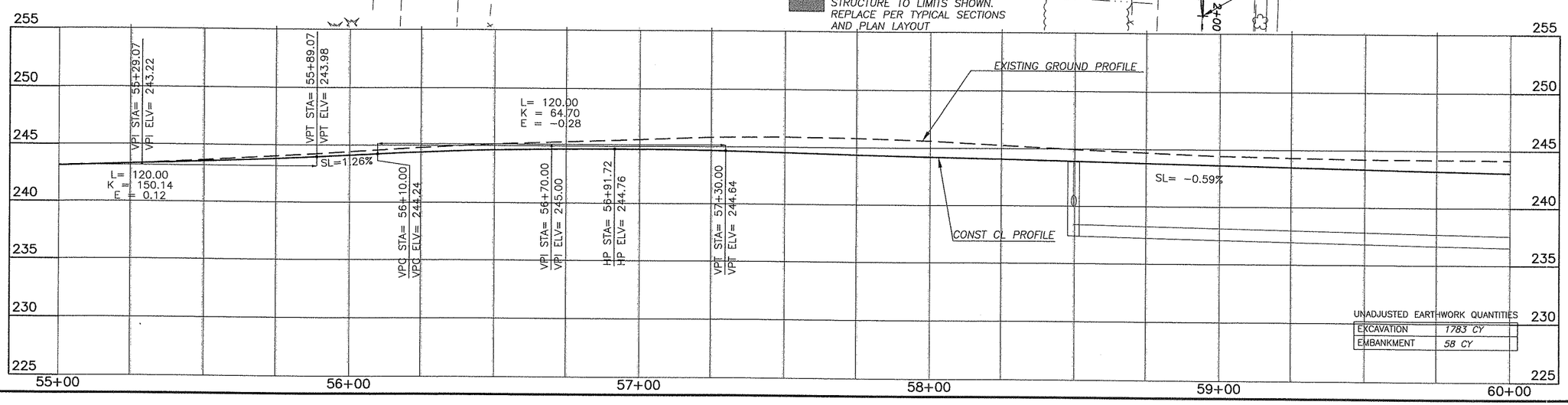

UNADJUSTED EARTHWORK QUANTITIES

EXCAVATION	1783 CY
EMBANKMENT	58 CY

DESIGNED BAK
DRAWN BAK
CRP 311022
HOR. 1"=20'
VERT. 1"=5'
DATE 1/16/04
DWG: PP10
SHEET 35 OF 93

CALL 48 HOURS BEFORE YOU DIG
1-800-553-4344
"It's the Law"
NORTHWEST UTILITIES NOTIFICATION CENTER

STATE OF WASHINGTON
KLAS
REINHOLD
38688
REGISTERED PROFESSIONAL ENGINEER
EXPIRES APRIL 7, 2004
2-19-04

DESIGN & ENGINEERING DIVISION
DESIGN SECTION

NE 76TH ST (SR-503 TO NE 147TH AVE)
PLAN & PROFILE STA 55+00 TO STA 60+00

proud past, promising future
CLARK COUNTY
WASHINGTON

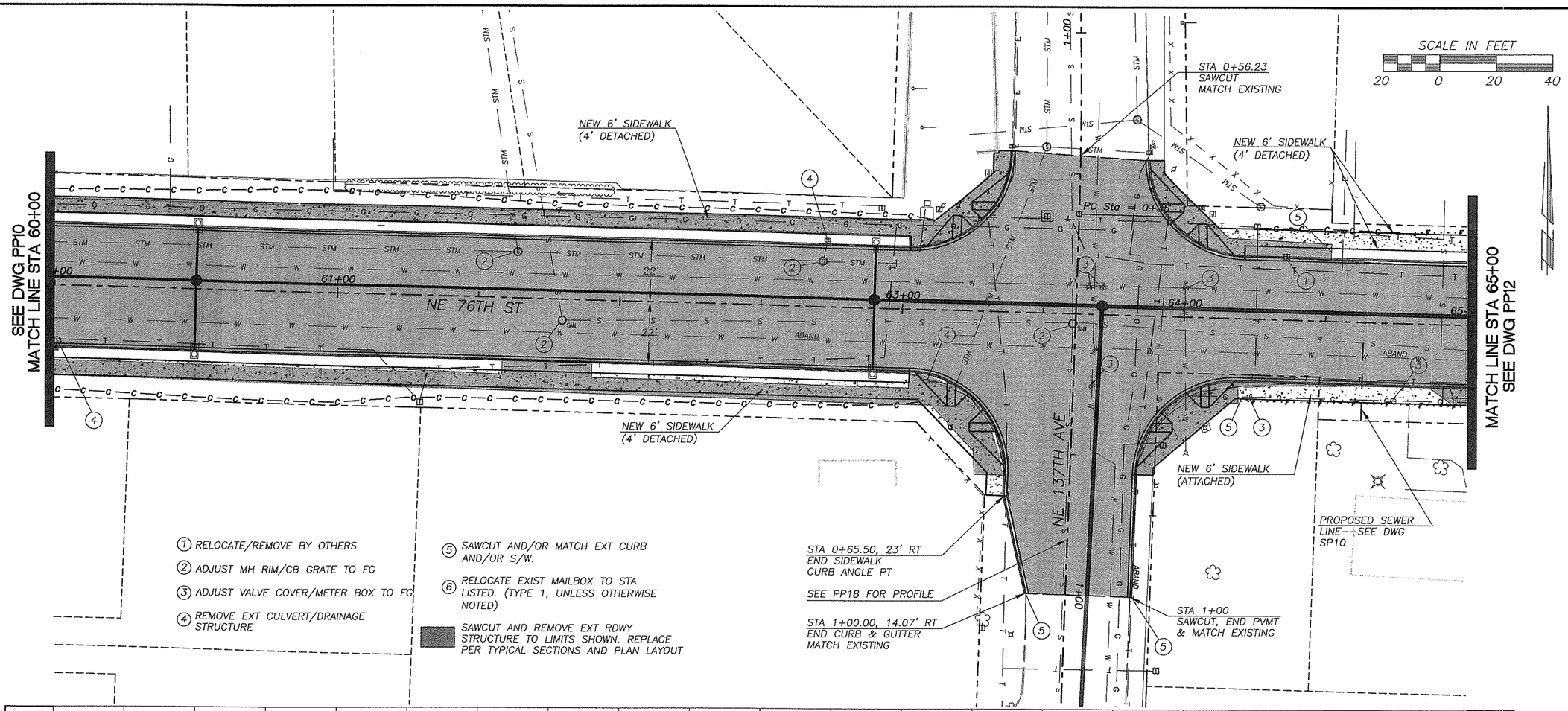

1. RELOCATE/REMOVE BY OTHERS
2. ADJUST MH RIM/CB GRATE TO FG
3. ADJUST VALVE COVER/METER BOX TO FG
4. REMOVE EXT CULVERT/DRAINAGE STRUCTURE
5. SAWCUT AND/OR MATCH EXT CURB AND/OR S/W.
6. RELOCATE EXIST MAILBOX TO STA LISTED. (TYPE 1, UNLESS OTHERWISE NOTED)

SAWCUT AND REMOVE EXT RDWY STRUCTURE TO LIMITS SHOWN. REPLACE PER TYPICAL SECTIONS AND PLAN LAYOUT

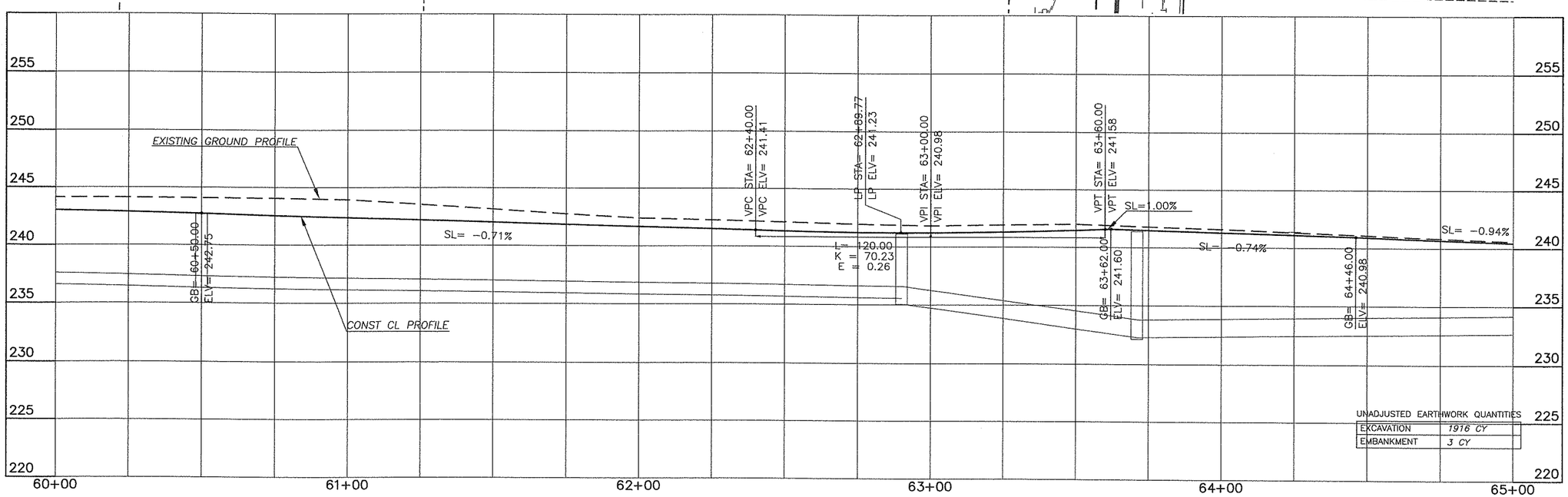

UNADJUSTED EARTHWORK QUANTITIES

EXCAVATION	1916 CY
EMBANKMENT	3 CY

DESIGNED	BAK
DRAWN	KB
CRP	311022
HOR.	1"=20'
VERT.	1"=5'
DATE	1/16/04
DWG.	PP11
SHEET 36	OF 93

CALL 48 HOURS BEFORE YOU DIG 1-800-553-4344 "It's the Law" NORTHWEST UTILITIES NOTIFICATION CENTER

STATE OF WASHINGTON BRUCE A. KLOS REGISTERED PROFESSIONAL ENGINEER 34868 EXPIRES APRIL 7, 2004 2-17-04

DESIGN & ENGINEERING DIVISION
DESIGN SECTION

NE 76TH ST (SR-503 TO NE 142ND AVE)
PLAN & PROFILE STA 60+00 TO STA 65+00

proud past, promising future
CLARK COUNTY WASHINGTON

(1) RELOCATE/REMOVE BY OTHERS

(2) ADJUST MH RIM/CB GRATE TO FG

(3) ADJUST VALVE COVER/METER BOX TO FG

(4) REMOVE EXT CULVERT/DRAINAGE STRUCTURE

(5) SAWCUT AND/OR MATCH EXT CURB AND/OR S/W.

(6) RELOCATE EXIST MAILBOX TO STA LISTED. (TYPE 1, UNLESS OTHERWISE NOTED)

SAWCUT AND REMOVE EXT RDWY STRUCTURE TO LIMITS SHOWN. REPLACE PER TYPICAL SECTIONS AND PLAN LAYOUT

SCALE IN FEET

20 0 20 40

SEE DWG PP11
MATCH LINE STA 65+00

MATCH LINE STA 70+00
SEE DWG PP13

NE 76TH ST

66+00 67+00 68+00 69+00 70+

REMOVE EXT TREES, SHRUBS BRUSH, ETC. TO LIMITS SHOWN (TYP)

STA 67+28.00, 35' LT
END 4' WIRE FENCE (TYPE 1)

STA 66+91.2, 35' LT
BEGIN 37 LF OF 4' WIRE FENCE (TYPE 1)

STA 66+53 CONST
74' ASPH-CONC DWY.
SAWCUT & MATCH 35' LT

STA 66+43, 23' LT

STA 66+06, 23' LT

R=15' (TYP)

STA 67+21.48, 26' LT
BEGIN SW TAPER

REMOVE 65 LF FENCE

PROTECT SUMP PUMP AND TREE PER PROP. AGREEMENT

STA 67+36.10, 22.50' LT
END SW TAPER

STA 67+59 CONST 35'
CEM CONC DWY. SAWCUT
& MATCH 40' LT. EXTEND
DWY WEST TO FENCE

STA 67+76.9, 35' LT
BEGIN 55 LF OF
6' CHAIN LINK
FENCE (TYPE 3)

REMOVE 65 LF FENCE

(3) STA 67+23, 23' LT

REMOVE EXT TREES, SHRUBS BRUSH, ETC. TO LIMITS SHOWN (TYP)

STA 68+27.5, 35' LT
END 6' CHAIN LINK FENCE
(TYPE 3)

STA 68+43 CONST 15'
ASPH CONC DWY. SAWCUT
& MATCH 40' LT

STA 68+52.54,
22.50' LT
BEGIN SW TAPER

R=15' (TYP)

STA 68+60,
23' LT

STA 69+67.06, 27.41' LT
END SW
MATCH EXISTING

STA 68+66.55, 26' LT
END SW TAPER

RELOCATE 115 LF OF
FENCE TO ROW LINE

NEW 6' SIDEWALK
(4' DETACHED)

STA 69+19.94, 22' LT
BEGIN CURB TAPER

STA 69+69.94,
23.78' LT
END CURB TAPER
MATCH EXISTING

REMOVE 80 LF OF FENCE

NEW 6' SIDEWALK
(4' DETACHED)

STA 65+45.36, 26' RT
END SW TAPER

R=15' (TYP)

STA 65+30.90, 22.50' RT
BEGIN SW TAPER

STA 65+28.6, 35' RT
BEGIN 75 LF OF
4' CHAIN LINK FENCE
(TYPE 6)

STA 65+08 CONST 24'
ASPH CONC DWY. SAWCUT
& MATCH 35' RT

PROTECT TREES

STA 66+13 CONST 15'
ASPH CONC DWY. SAWCUT
& MATCH 35' RT

STA 66+00.9, 35' RT
END 4' CHAIN LINK FENCE
(TYPE 6)

(TEMPORARY FENCING PER
PROPERTY AGREEMENT)

PROTECT
TREES

STA 66+76 CONST 18'
ASPH CONC DWY. SAWCUT
& MATCH 35' RT

PROPOSED SEWER
LINE--SEE DWG SP11

STA 67+92 CONST 26'
ASPH CONC DWY. SAWCUT
& MATCH 40' RT

STA 68+37.97, 26' RT
BEGIN SW TAPER

R=15' (TYP)

STA 68+51.66, 22.50' RT
END SW TAPER

NEW 6' SIDEWALK
(ATTACHED)

STA 68+70 CONST 24'
ASPH CONC DWY. SAWCUT
& MATCH 35' RT

STA 69+44 CONST 18'
ASPH CONC DWY. SAWCUT
& MATCH 40' RT

REMOVE TREE
PER PROPERTY
AGREEMENT

REMOVE 74 LF
OF FENCE

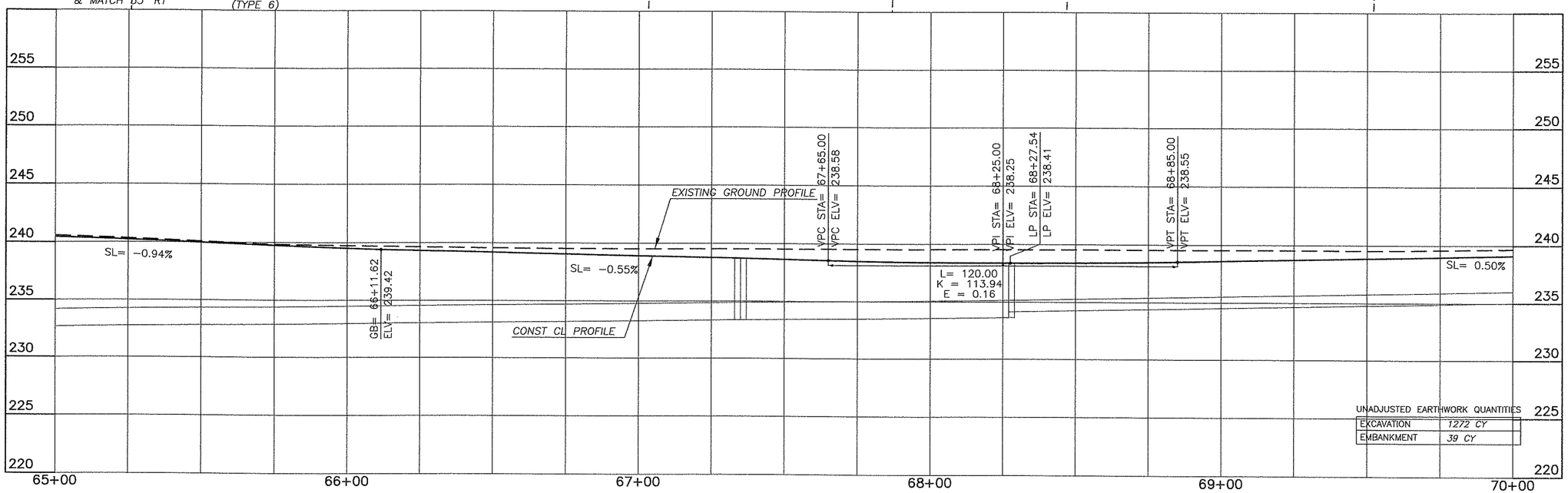

UNADJUSTED EARTHWORK QUANTITIES

EXCAVATION	1272 CY
EMBANKMENT	39 CY

DESIGNED	BAK
DRAWN	BAK
CRP	311022
HOR.	1"=20'
VERT.	1"=5'
DATE	1/16/04
DWG:	PP12
SHEET 37	OF 93

CALL 48 HOURS BEFORE YOU DIG
1-800-553-4344
"It's the Law"
NORTHWEST UTILITIES NOTIFICATION CENTER

EXPIRES APRIL 7, 2004

2-19-04

DESIGN & ENGINEERING DIVISION
DESIGN SECTION

NE 76TH ST (SR-503 TO NE 147TH AVE)
PLAN & PROFILE STA 65+00 TO STA 70+00

proud past, promising future

CLARK COUNTY
WASHINGTON

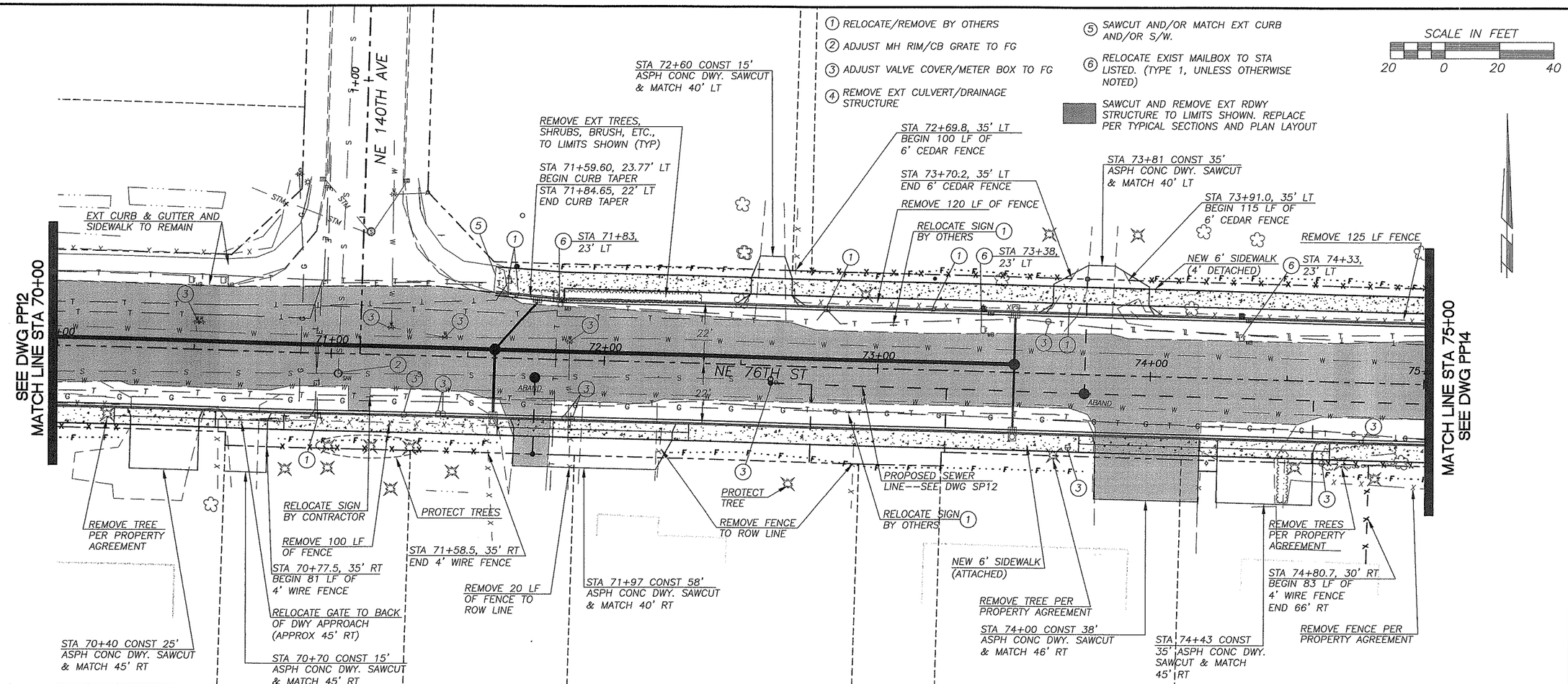

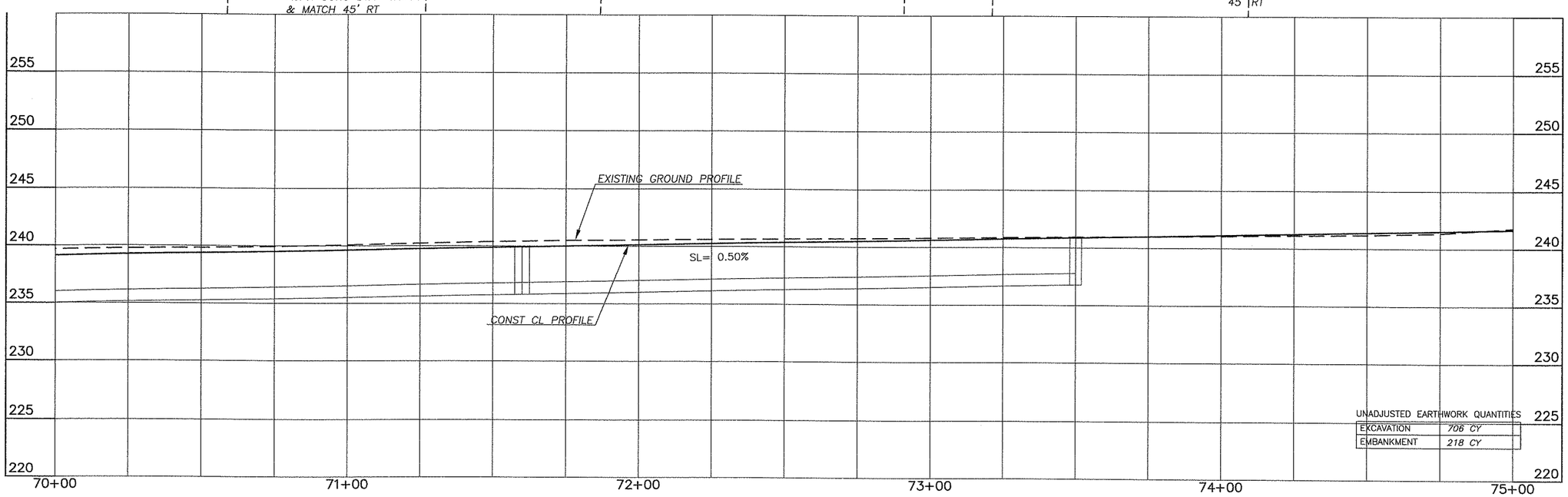

UNADJUSTED EARTHWORK QUANTITIES

EXCAVATION	706 CY
EMBANKMENT	218 CY

DESIGNED	BAK
DRAWN	BAK
CRP	311022
HOR.	1"=20'
VERT.	1"=5'
DATE	1/16/04
DWG.	PP13
SHEET 38	OF 93

CALL 48 HOURS BEFORE YOU DIG 1-800-553-4344 "It's the Law" NORTHWEST UTILITIES NOTIFICATION CENTER

CLARK A. KLUG STATE OF WASHINGTON 33869 PROFESSIONAL ENGINEER EXPIRES APRIL 7, 2004 2-17-04

DESIGN & ENGINEERING DIVISION
DESIGN SECTION

NE 76TH ST (SR-503 TO NE 147TH AVE)
PLAN & PROFILE STA 70+00 TO STA 75+00

proud past, promising future
CLARK COUNTY WASHINGTON

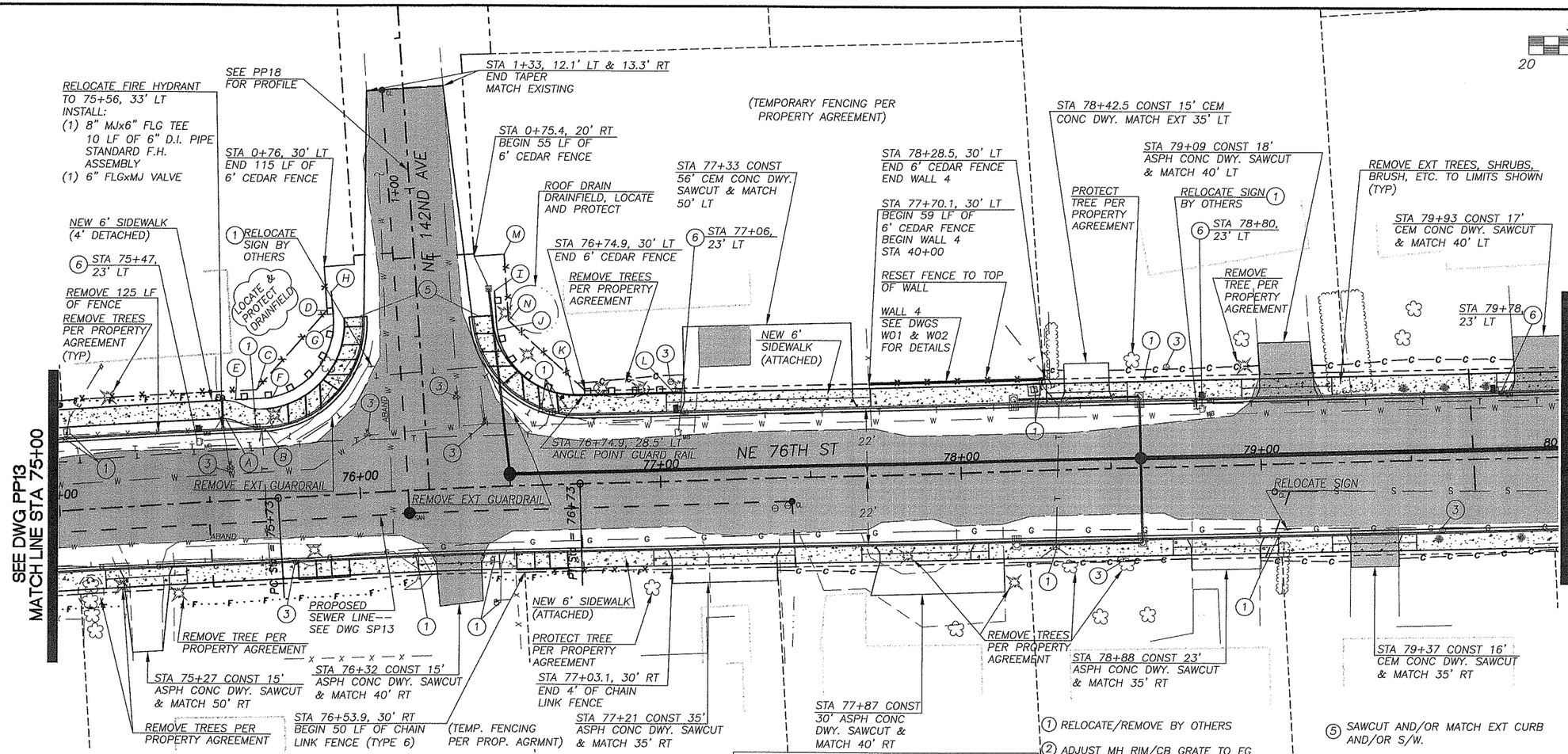

PT	STA	OFFSET	DESCRIPTION
A	75+55.57	26.0 L	BEGIN SW TAPER
B	75+69.45	22.5 L	END SW TAPER
C	75+67.43	35.0 L	ANGLE PT FENCE
D	0+60.91	30.0 L	ANGLE PT FENCE
E	75+60.21	32.01 L	BEGIN GUARDRAIL
F	75+68.86	32.0 L	PC GUARDRAIL
G	0+58.83	28.06 L	PT GUARDRAIL
H	0+67.14	28.21 L	END GUARDRAIL
I	0+63.45	26.0 R	BEGIN GUARDRAIL
J	0+53.36	25.91 R	PC GUARDRAIL
K	76+72.58	28.85 L	PT GUARDRAIL
L	77+07.75	28.85 L	END GUARDRAIL
M	0+75.42	30.0 R	ANGLE PT FENCE
N	0+53.14	30.0 R	ANGLE PT FENCE

(1) RELOCATE/REMOVE BY OTHERS

(2) ADJUST MH RIM/CB GRATE TO FG

(3) ADJUST VALVE COVER/METER BOX TO FG

REMOVE EXT CULVERT/DRAINAGE STRUCTURE

(5) SAWCUT AND/OR MATCH EXT CURB AND/OR S/W.

(6) RELOCATE EXIST MAILBOX TO STA LISTED. (TYPE 1, UNLESS OTHERWISE NOTED)

SAWCUT AND REMOVE EXT RDWY STRUCTURE TO LIMITS SHOWN. REPLACE PER TYPICAL SECTIONS AND PLAN LAYOUT

UNADJUSTED EARTHWORK QUANTITIES

EXCAVATION	2486 CY
EMBANKMENT	62 CY

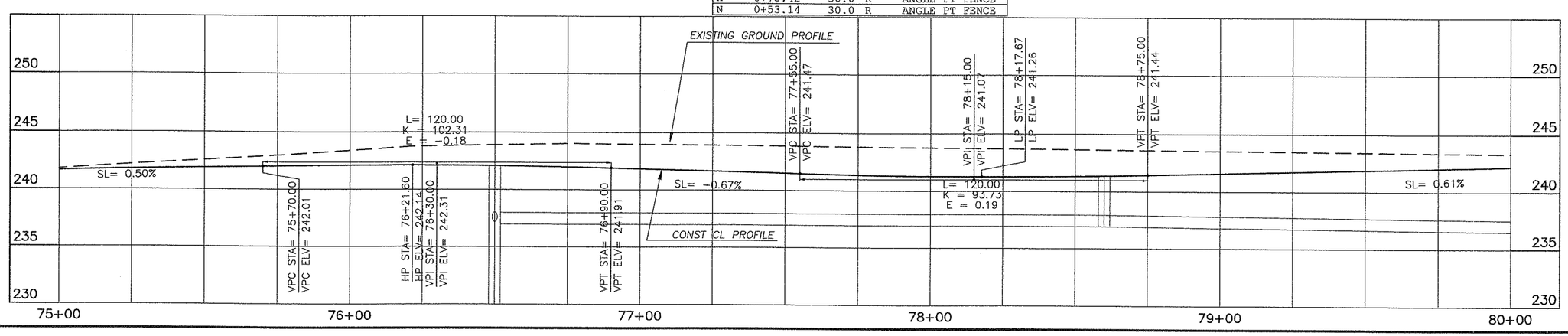

DESIGNED	BAK
DRAWN	BAK
CRP	311022
HOR.	1"=20'
VERT.	1"=5'
DATE	1/16/04
DWG:	PP14
SHEET 39	OF 93

CALL 48 HOURS BEFORE YOU DIG
1-800-553-4344
"It's the Law"
NORTHWEST UTILITIES NOTIFICATION CENTER

GEORGE A. KILIS
STATE OF WASHINGTON
37588
REGISTERED PROFESSIONAL ENGINEER
EXPIRES: APRIL 7, 2004
2-14-04

DESIGN & ENGINEERING DIVISION
DESIGN SECTION

NE 76TH ST (SR-503 TO NE 147TH AVE)
PLAN & PROFILE STA 75+00 TO STA 80+00

proud past, promising future
CLARK COUNTY
WASHINGTON

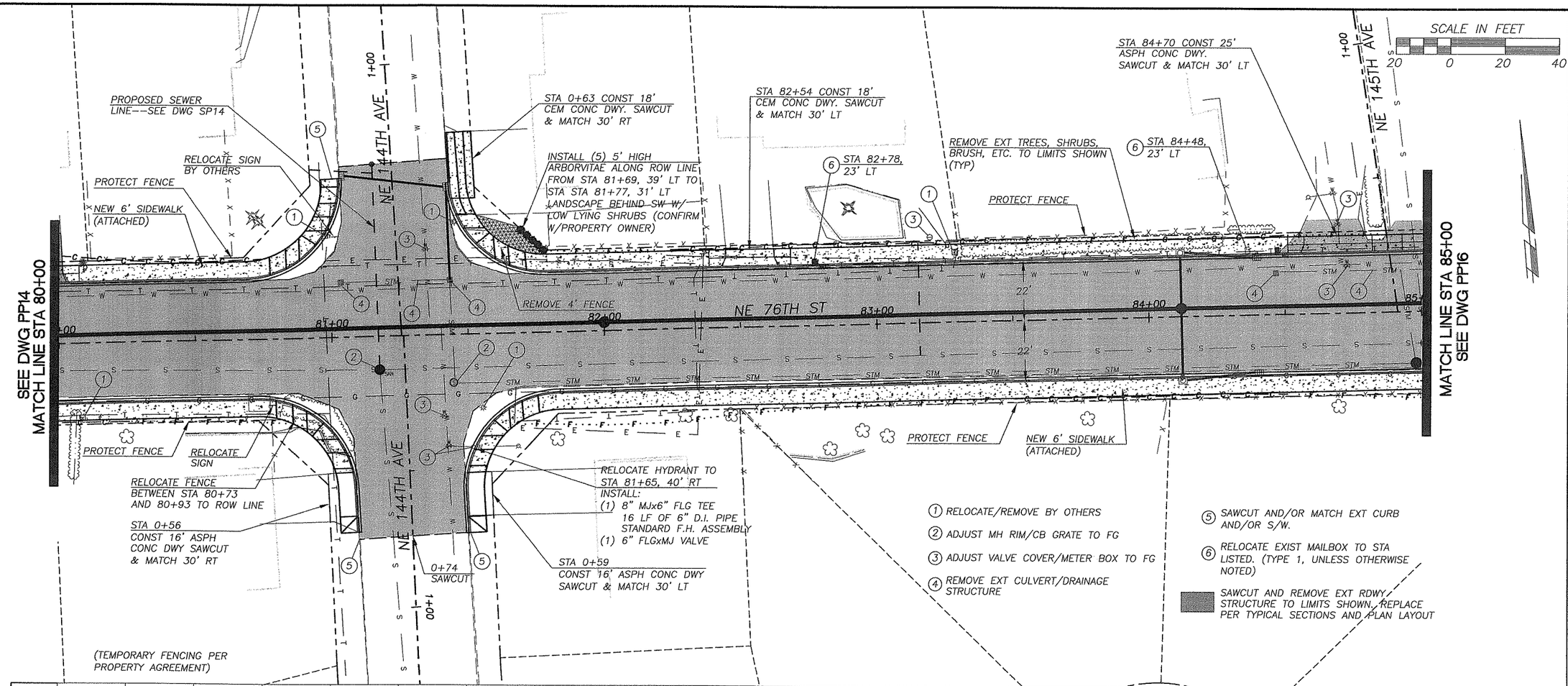

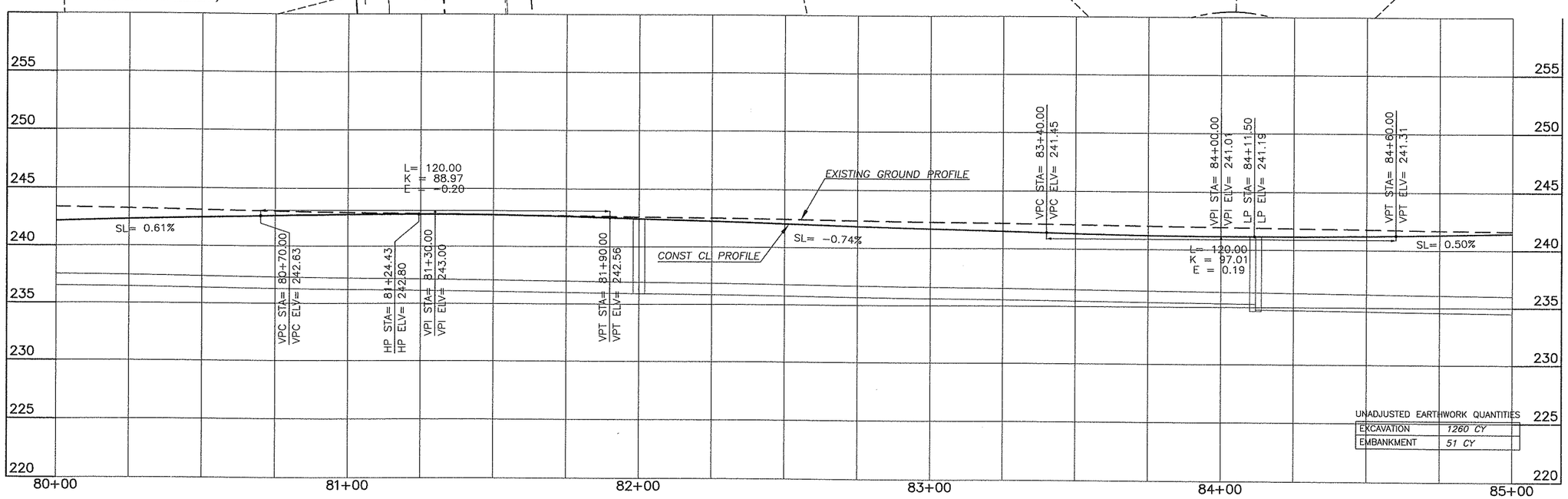

UNADJUSTED EARTHWORK QUANTITIES

EXCAVATION	1260 CY
EMBANKMENT	51 CY

DESIGNED	BAK
DRAWN	BAK
CRP	311022
HOR.	1"=20'
VERT.	1"=5'
DATE	1/16/04
DWG.	PP15
SHEET 40	OF 93

CALL 48 HOURS BEFORE YOU DIG 1-800-553-4344 "It's the Law" NORTHWEST UTILITIES NOTIFICATION CENTER

STATE OF WASHINGTON BLAKE A. KLUG REGISTERED PROFESSIONAL ENGINEER EXPIRES APRIL 2004

2-17-04

DESIGN & ENGINEERING DIVISION
DESIGN SECTION

NE 76TH ST (SR-503 TO NE 147TH AVE)
PLAN & PROFILE STA 80+00 TO STA 85+00

proud past, promising future

CLARK COUNTY WASHINGTON

SEE DWG PP15
MATCH LINE STA 85+00

STA 85+06
CONST 25' ASPH
CONC DWY
MATCH 30' LT

STA 85+07.1, 30' LT
BEGIN 103 LF OF 4'
CHAIN LINK FENCE
(TYPE 6)

STA 86+17 CONST 15'
CEM CONC DWY. SAWCUT
& MATCH 40' LT

STA 86+09.4, 30' LT
END 4' CHAIN LINK
FENCE (TYPE 6)

REMOVE 110 LF
OF FENCE

STA (5) 85+30,
23' LT

NEW 6' SIDEWALK
(ATTACHED)

STA 86+45,
23' LT

(TEMPORARY FENCING PER
PROPERTY AGREEMENT)

STA 87+10 CONST 15'
ASPH CONC DWY. SAWCUT
& MATCH 49' LT

STA 0+75, 20.22' LT
MATCH EXISTING CURB

RELOCATE SIGN
BY OTHERS

STA 87+25,
23' LT

NE 147TH AVE
STM 1+00

STA 0+75
SAWCUT

STA 0+75, 20.16' RT
MATCH EXISTING CURB

STA 89+39 CONST 20' ASPH
CONC DWY. SAWCUT & MATCH 30' LT

REMOVE EXT TREES, SHRUBS,
BRUSH, ETC. TO LIMITS SHOWN
(TYP)

NEW 6' SIDEWALK
(ATTACHED)

RELOCATE SPRINKLERS
PER PROPERTY
AGREEMENT

STA 89+57,
23' LT

SCALE IN FEET
20 0 20 40

STA 90+03.16, 22' LT
END CURB, GUTTER,
AND SIDEWALK.
MATCH EXISTING

STA 90+10
SAWCUT, END FULL
DEPTH CONSTRUCTION,
MATCH EXISTING

86+00 87+00 76TH ST 88+00 89+00 90+00

22' 22'

PROTECT
FENCE

REMOVE TREE
PER PROP.
AGREEMENT

PROPOSED SEWER
LINE--SEE DWG
SP15

STA 85+96 CONST 16'
CEM CONC DWY. SAWCUT
& MATCH 35' RT

STA 86+39 CONST 17'
CEM CONC DWY. SAWCUT
& MATCH 30' RT

NEW 6' SIDEWALK
(ATTACHED)

PROTECT TREE PER
PROPERTY AGREEMENT

STA 0+43
SAWCUT

NE 147TH AVE
1+00

RELOCATE SIGN
BY OTHERS

NEW 6' SIDEWALK
(ATTACHED)

STA 89+76,
23' RT

RELOCATE FIRE HYDRANT TO
STA 88+50, 40' RT
INSTALL:
(1) 8" MJx6" FLG TEE
30 LF OF 6" D.I. PIPE
STANDARD F.H. ASSEMBLY
(1) 6" FLGxMJ VALVE

STA 89+92 CONST 16'
CEM CONC DWY. SAWCUT
& MATCH 35' RT

STA 90+06.32,
22' RT
END CURB, GUTTER,
AND SIDEWALK.
MATCH EXISTING

(1) RELOCATE/REMOVE BY OTHERS
(2) ADJUST MH RIM/CB GRATE TO FG
(3) ADJUST VALVE COVER/METER BOX TO FG
(4) REMOVE EXT CULVERT/DRAINAGE STRUCTURE

(5) SAWCUT AND/OR MATCH EXT CURB AND/OR S/W.
(6) RELOCATE EXIST MAILBOX TO STA LISTED. (TYPE 1, UNLESS OTHERWISE NOTED)

SAWCUT AND REMOVE EXT RDWY STRUCTURE TO LIMITS SHOWN. REPLACE PER TYPICAL SECTIONS AND PLAN LAYOUT

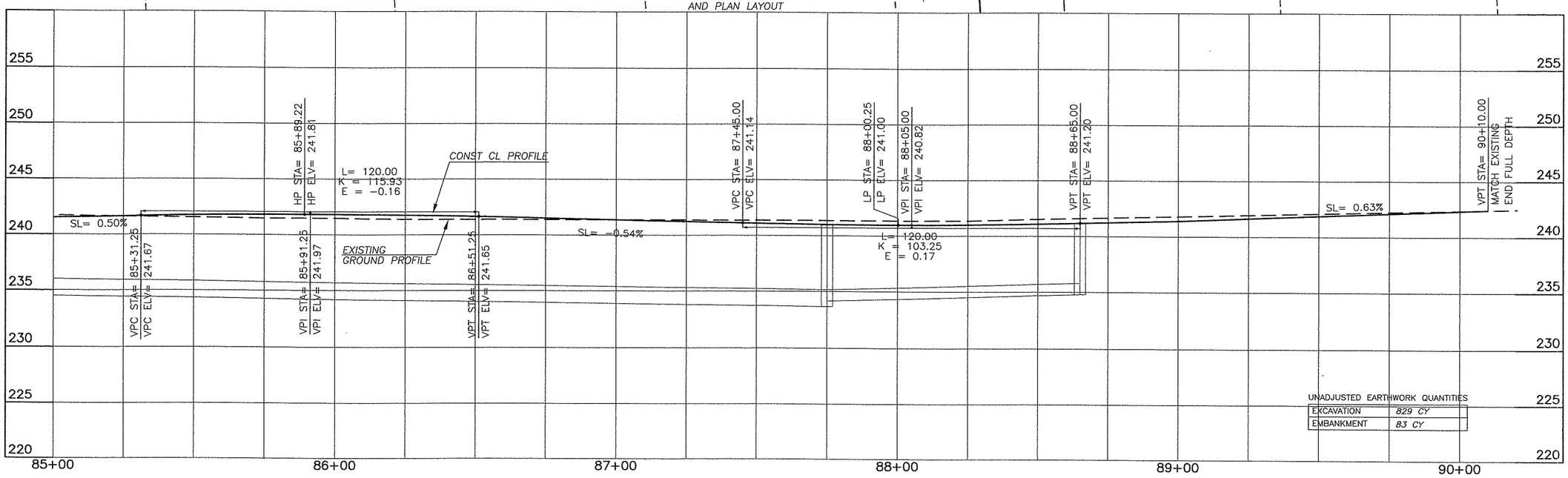

UNADJUSTED EARTHWORK QUANTITIES

EXCAVATION	829 CY
EMBANKMENT	83 CY

DESIGNED	BAK
DRAWN	KB
CRP	311022
HOR.	1"=20'
VERT.	1"=5'
DATE	1/16/04
DWG.	PP16
SHEET 41	OF 93

CALL 48 HOURS BEFORE YOU DIG
1-800-553-4344
"It's the Law"
NORTHWEST UTILITIES NOTIFICATION CENTER

STEVE KLIS
STATE OF WASHINGTON
30588
REGISTERED PROFESSIONAL ENGINEER
EXPIRES: APRIL 7, 2004
2-17-04

DESIGN & ENGINEERING DIVISION
DESIGN SECTION

NE 76TH ST (SR-503 TO NE 147TH AVE)
PLAN & PROFILE STA 85+00 TO STA 90+00

proud past, promising future
CLARK COUNTY
WASHINGTON

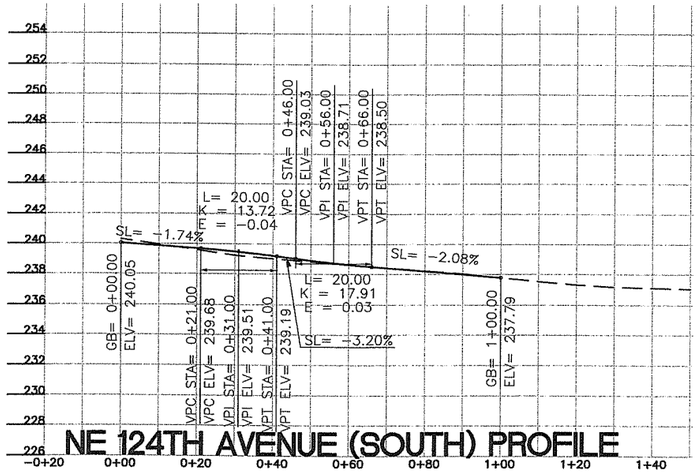

NE 124TH AVENUE (SOUTH) PROFILE

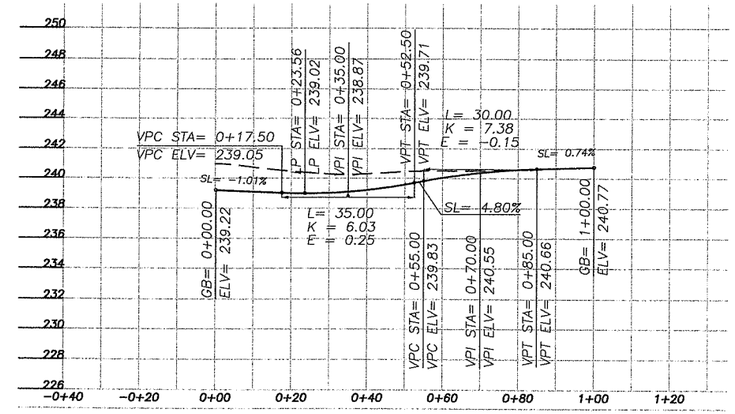

NE 127TH AVENUE PROFILE

SCALE IN FEET

20 0 20 40

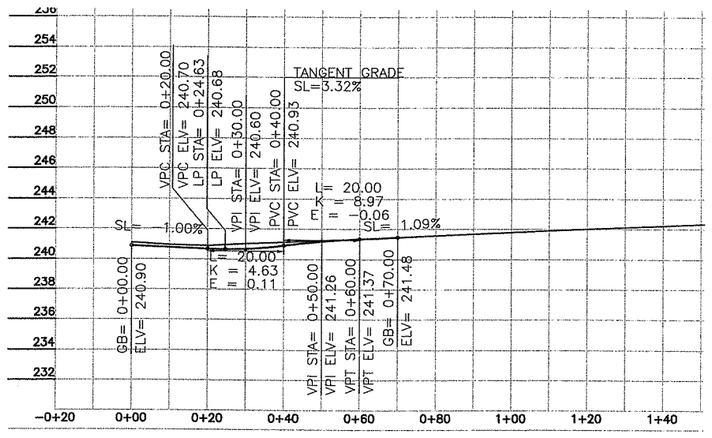

NE 130TH AVENUE PROFILE

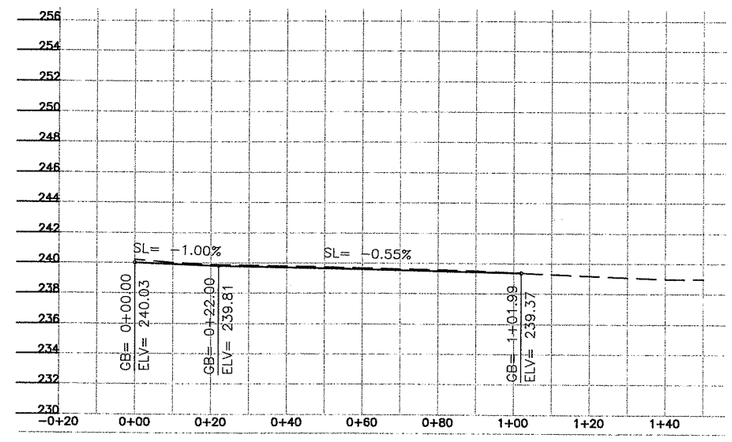

NE 131ST AVENUE (SOUTH) PROFILE

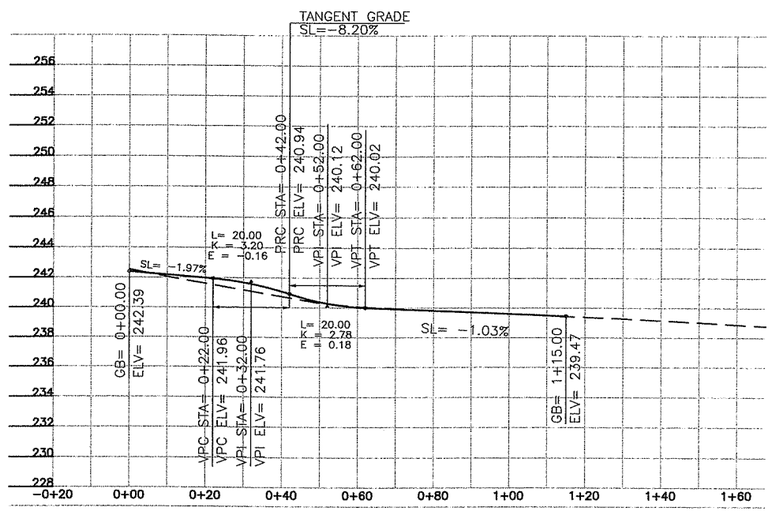

NE 133RD AVENUE PROFILE

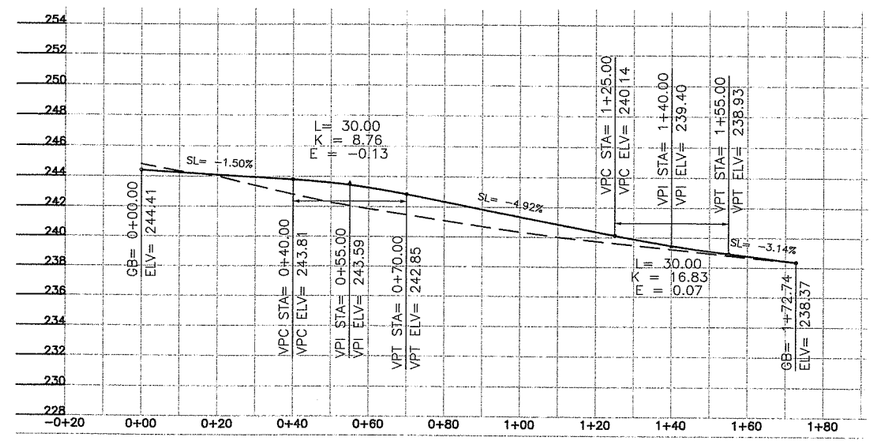

NE 134TH AVENUE (SOUTH) PROFILE

DESIGNED	BAK
DRAWN	KB
CRP	311022
HOR.	1"=20'
VERT.	1"=5'
DATE	1/16/04
DWG.	PP17
SHEET 42	OF 93

CALL 48 HOURS BEFORE YOU DIG 1-800-553-4344 "It's the Law" NORTHWEST UTILITIES NOTIFICATION CENTER

STATE OF WASHINGTON BRUCE A. KILIS 19885 REGISTERED PROFESSIONAL ENGINEER EXPIRES: APRIL 2, 2004

DESIGN & ENGINEERING DIVISION
DESIGN SECTION

NE 76TH ST (SR-503 TO NE 147TH AVE)
PROFILES

proud past, promising future

CLARK COUNTY WASHINGTON

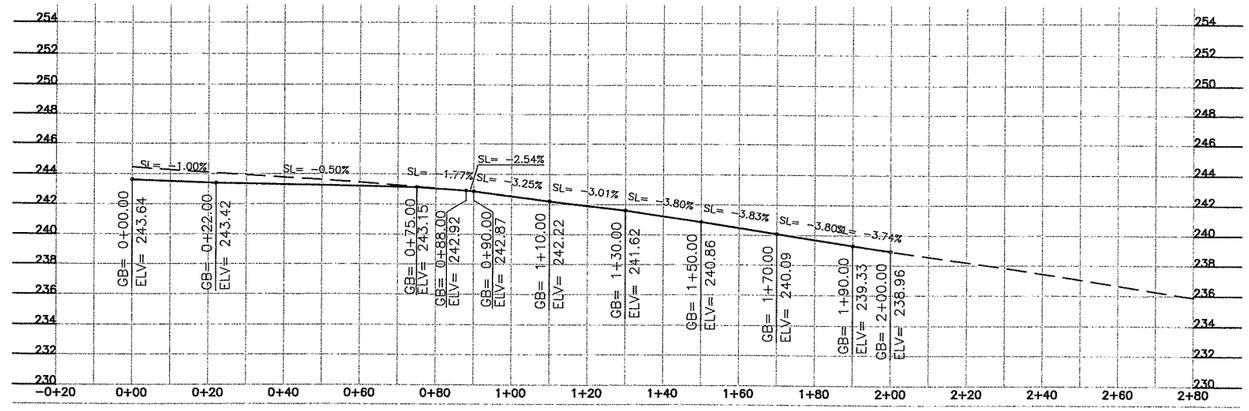

NE 135TH AVENUE PROFILE

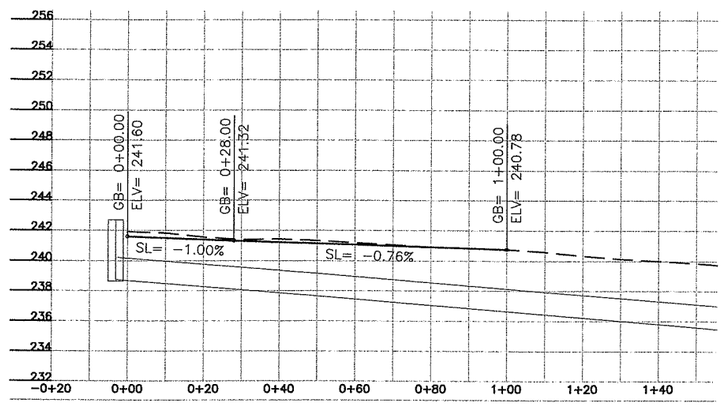

NE 137TH AVENUE (SOUTH) PROFILE

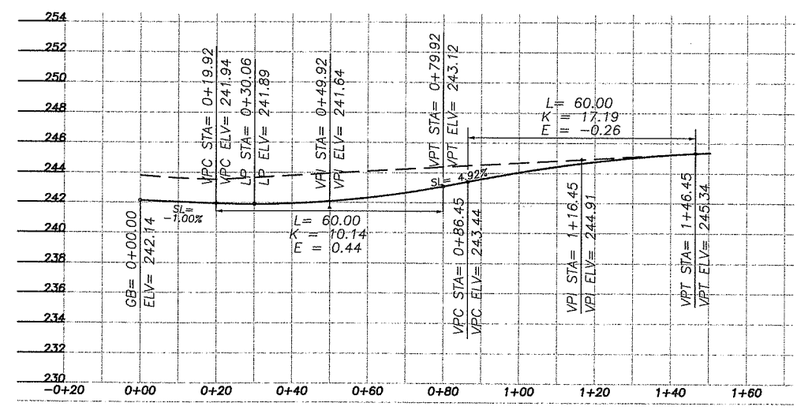

NE 142ND AVENUE PROFILE

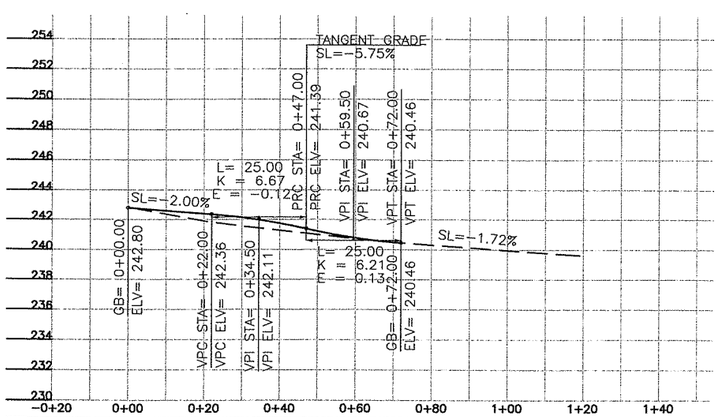

NE 144TH AVENUE (SOUTH) PROFILE

SCALE IN FEET

20 0 20 40

DESIGNED	BAK
DRAWN	KB
CRP	311022
HOR.	1"=20'
VERT.	1"=5'
DATE	1/16/04
DWG:	PP18
SHEET 43	OF 93

CALL 48 HOURS BEFORE YOU DIG 1-800-553-4344 "It's the Law" NORTHWEST UTILITIES NOTIFICATION CENTER

STATE OF WASHINGTON BRUCE A. MILES 19858 REGISTERED PROFESSIONAL ENGINEER

EXPIRES APRIL 7, 2004

DESIGN & ENGINEERING DIVISION
DESIGN SECTION

NE 76TH ST (SR-503 TO NE 147TH AVE)
PROFILES

proud past, promising future

CLARK COUNTY WASHINGTON

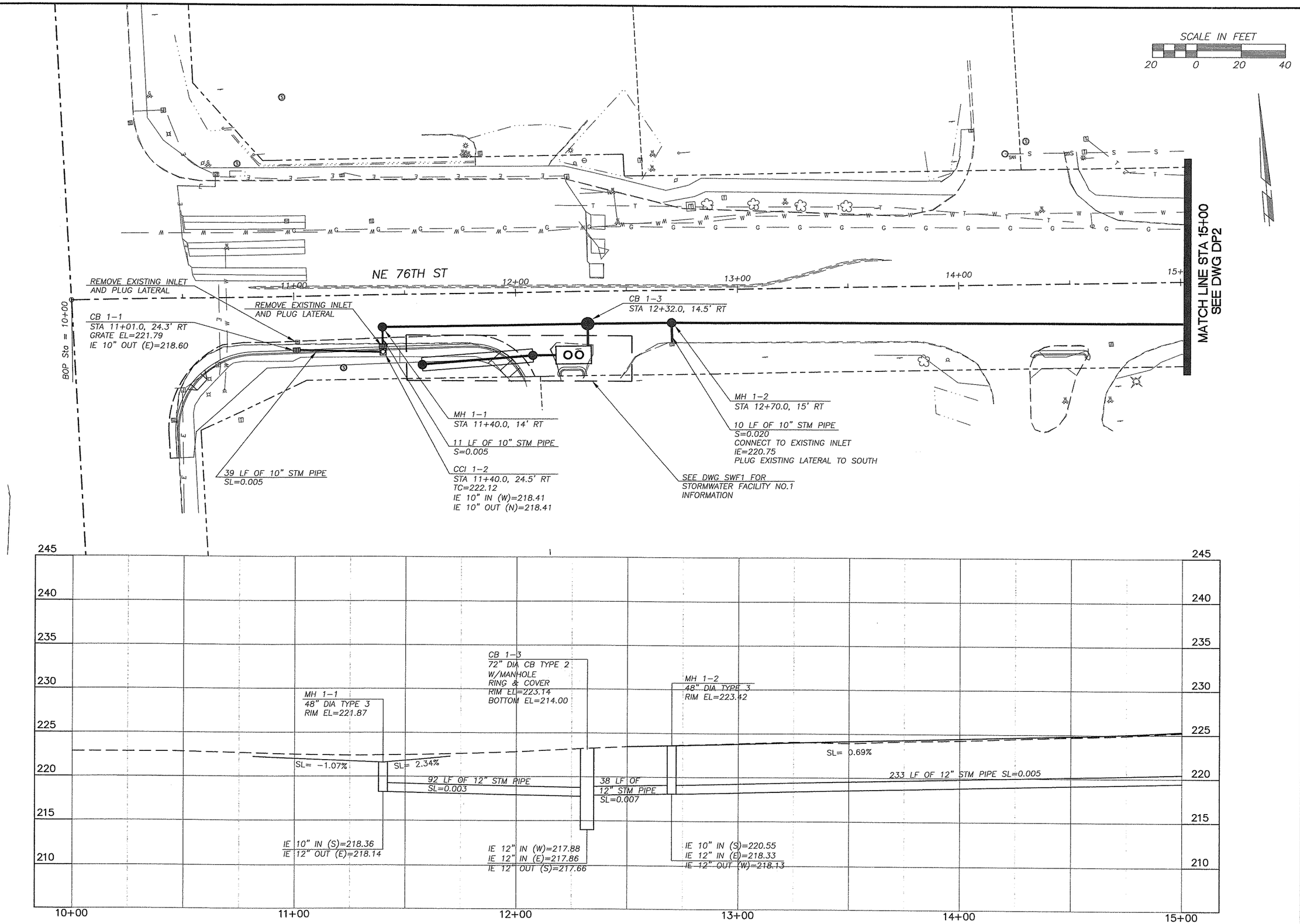

DESIGNED	BAK
DRAWN	BAK
CRP	31/022
HOR.	1"=20'
VERT.	1"=5'
DATE	1/16/04
DWG.	DP1
SHEET 44	OF 93

CALL 48 HOURS BEFORE YOU DIG
1-800-553-4344
"It's the Law"
NORTHWEST UTILITIES NOTIFICATION CENTER

STEPHEN L. ORANGE
STATE OF WASHINGTON
32088
REGISTERED PROFESSIONAL ENGINEER
EXPIRES JANUARY 20, 2004
2-19-04

DESIGN & ENGINEERING DIVISION
DESIGN SECTION

NE 76TH ST (SR-503 TO NE 147TH AVE)
DRAINAGE PLAN B.O.P. TO STA 15+00

proud past, promising future
CLARK COUNTY
WASHINGTON

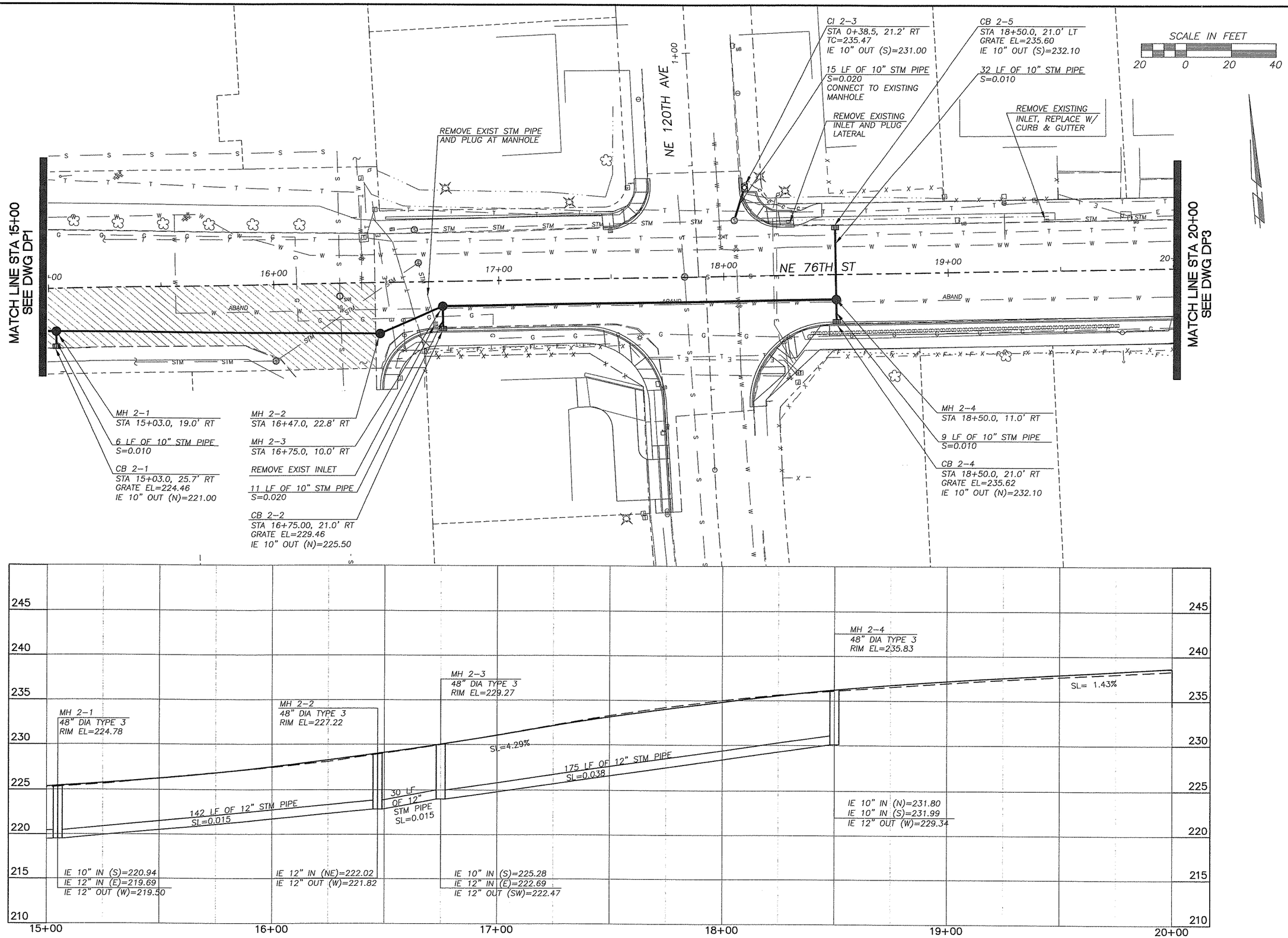

DESIGNED BAK
DRAWN BAK
CRP 311022
HOR. 1"=20'
VERT. 1"=5'
DATE 1/16/04
DWG: DP2
SHEET 45 OF 93

CALL 48 HOURS BEFORE YOU DIG
1-800-553-4344
"It's the Law"
NORTHWEST UTILITIES NOTIFICATION CENTER

STATE OF WASHINGTON
DANIEL A. KNAPP
32068
REGISTERED PROFESSIONAL ENGINEER
EXPIRES: JANUARY 20, 2004
7-19-04

DESIGN & ENGINEERING DIVISION
DESIGN SECTION

NE 76TH ST (SR-503 TO NE 147TH AVE)
DRAINAGE PLAN STA 15+00 TO STA 20+00

proud past, promising future
CLARK COUNTY
WASHINGTON

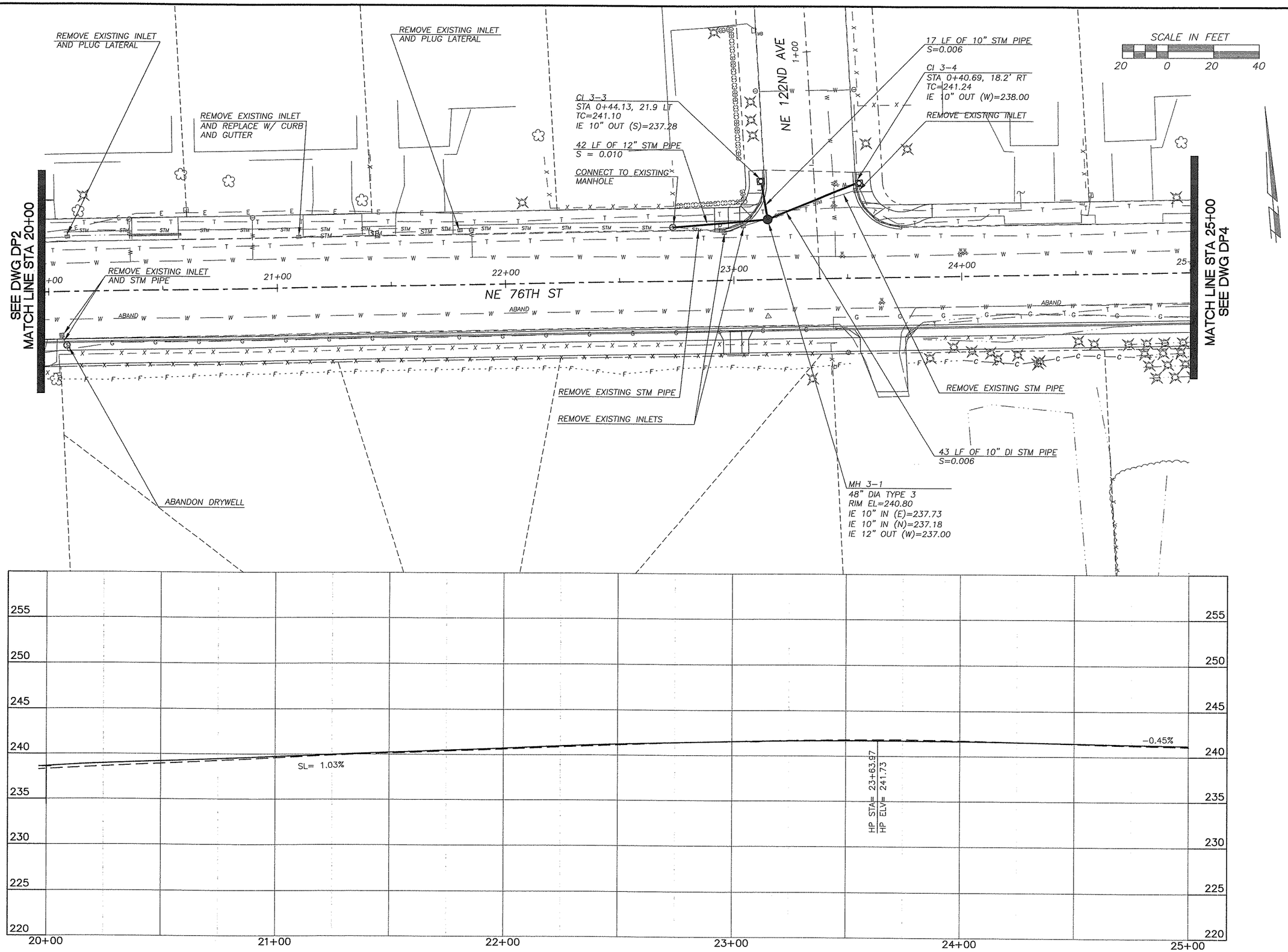

DESIGNED BAK
DRAWN BAK
CRP 31/022
HOR. 1"=20'
VERT. 1"=5'
DATE 1/16/04
DWG. DP3
SHEET 46 OF 93

CALL 48 HOURS BEFORE YOU DIG
1-800-553-4344
"It's the Law"
NORTHWEST UTILITIES NOTIFICATION CENTER

THOMAS D. GRANGER
STATE OF WASHINGTON
32088
REGISTERED PROFESSIONAL ENGINEER
EXPIRES JANUARY 20, 2004
1-19-04

DESIGN & ENGINEERING DIVISION
DESIGN SECTION

NE 76TH ST (SR-503 TO NE 147TH AVE)
DRAINAGE PLAN STA 20+00 TO STA 25+00

proud past, promising future
CLARK COUNTY
WASHINGTON

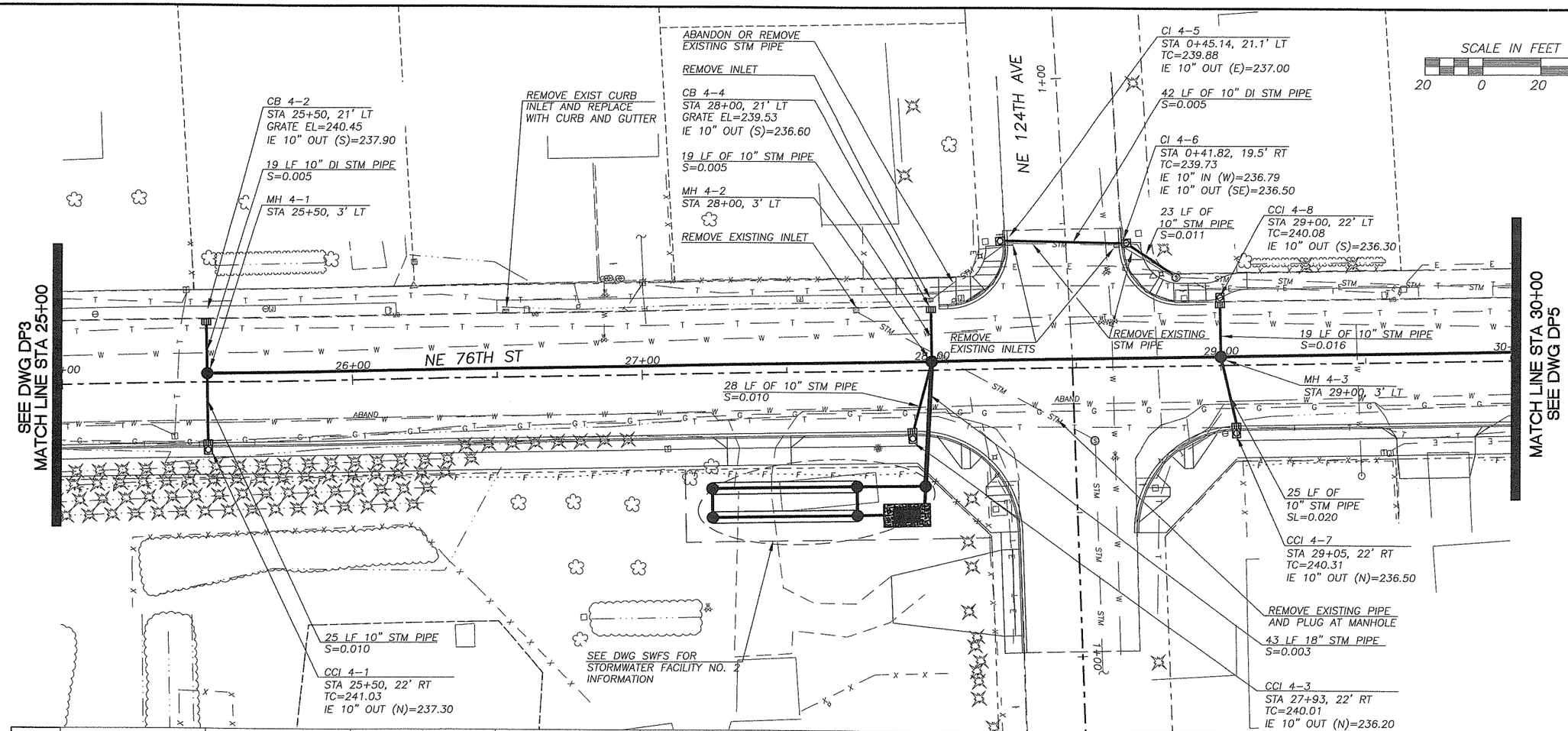

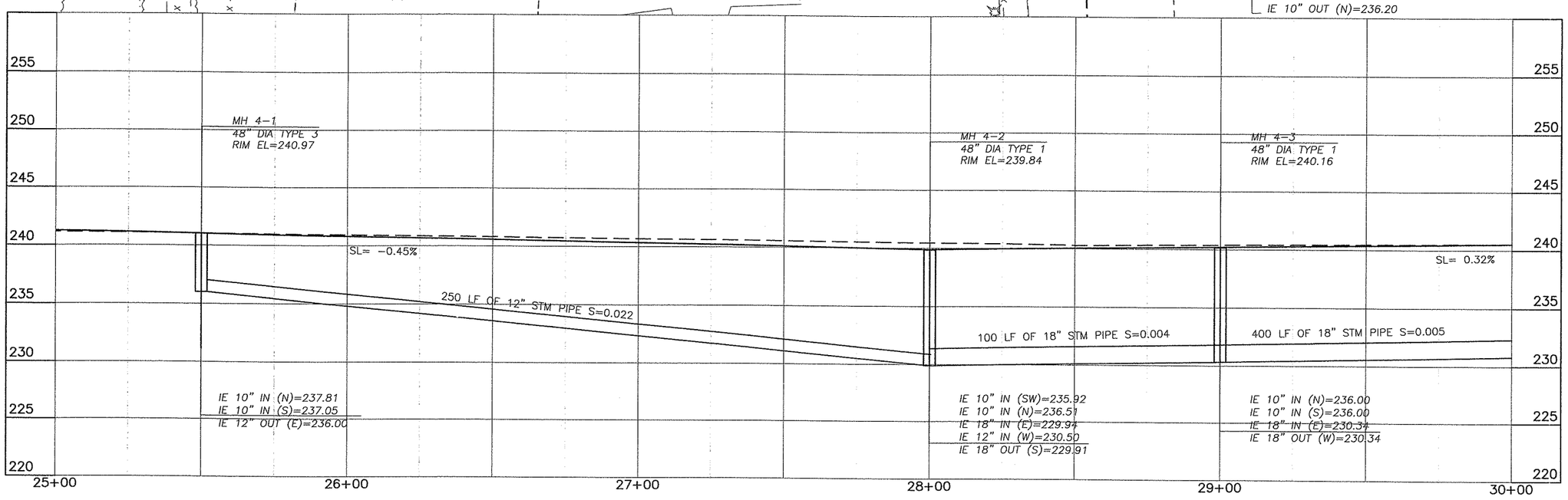

DESIGNED	BAK
DRAWN	BAK
CRP	311022
HOR.	1"=20'
VERT.	1"=5'
DATE	1/16/04
DWG:	DP4
SHEET 47	OF 93

CALL 48 HOURS BEFORE YOU DIG
1-800-553-4344
"It's the Law"
NORTHWEST UTILITIES NOTIFICATION CENTER

STATE OF WASHINGTON
DAVID L. GRANGE
32068
PROFESSIONAL ENGINEER
EXPIRES: JANUARY 29, 2004
2-19-04

DESIGN & ENGINEERING DIVISION
DESIGN SECTION

NE 76TH ST (SR-503 TO NE 147TH AVE)
DRAINAGE PLAN STA 25+00 TO STA 30+00

proud past, promising future
CLARK COUNTY
WASHINGTON

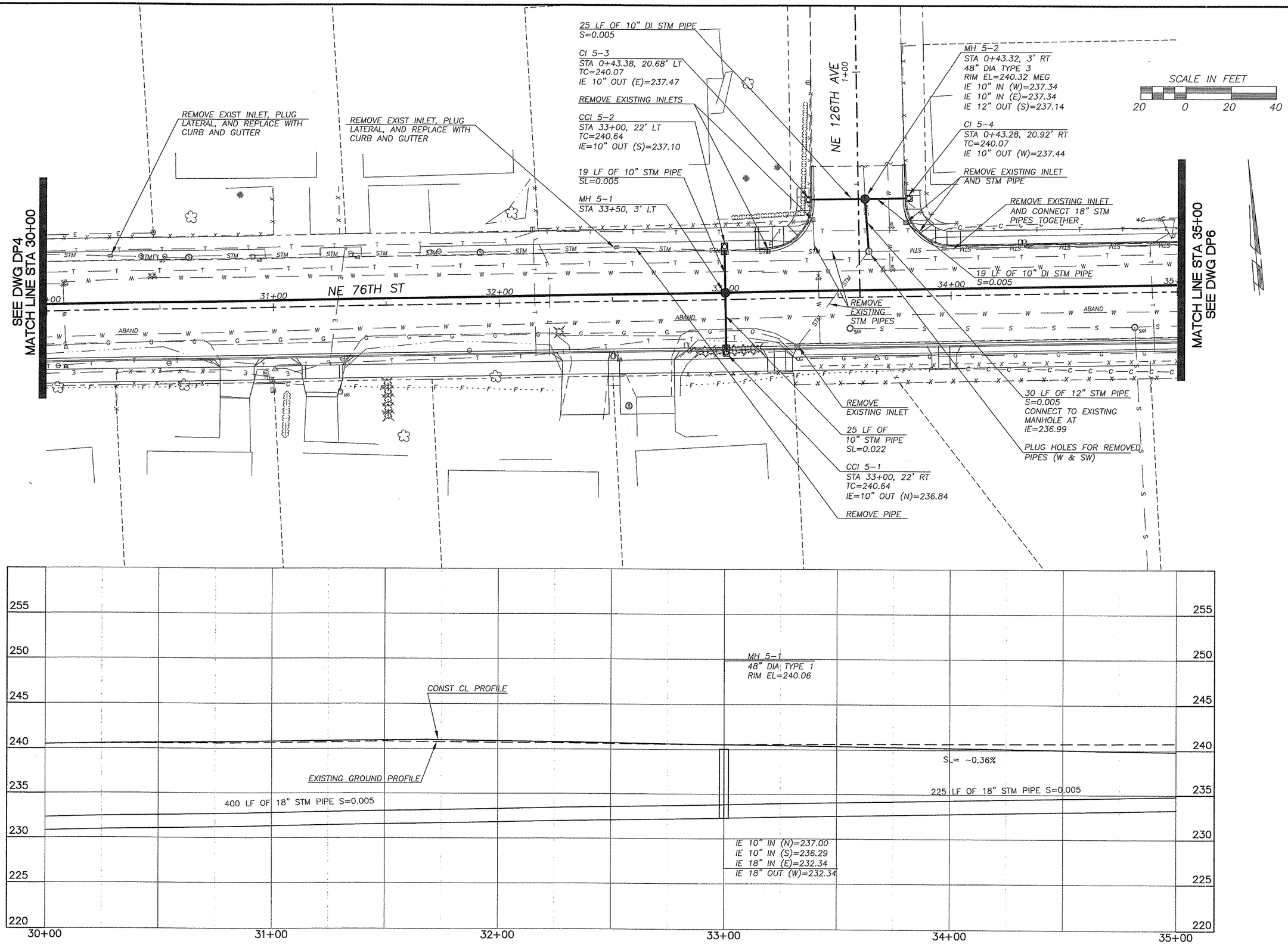

DESIGNED	BAK
DRAWN	BAK
CRP	311022
HOR.	1"=20'
VERT.	1"=5'
DATE	1/16/04
DWG.	DP5
SHEET 48	OF 93

CALL 48 HOURS BEFORE YOU DIG
1-800-553-4344
"It's the Law"
NORTHWEST UTILITIES NOTIFICATION CENTER

STATE OF WASHINGTON
DAVID A. GRANCE
32098
REGISTERED PROFESSIONAL ENGINEER
EXPIRES JANUARY 20, 2004
2-19-04

DESIGN & ENGINEERING DIVISION
DESIGN SECTION

NE 76TH ST (SR-503 TO NE 147TH AVE)
DRAINAGE PLAN STA 30+00 TO STA 35+00

proud past, promising future
CLARK COUNTY
WASHINGTON

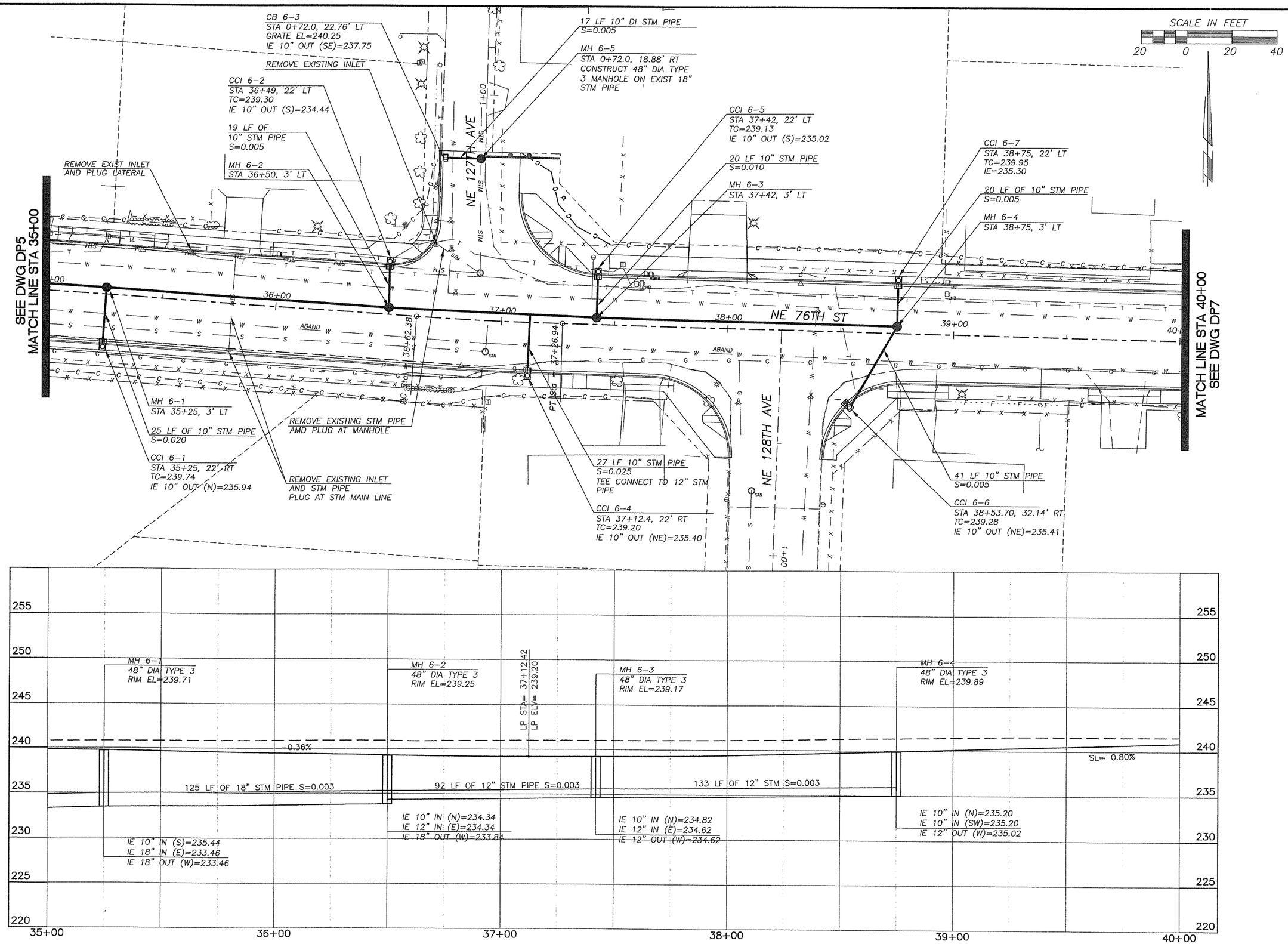

DESIGNED	BAK
DRAWN	BAK
CRP	311022
HOR.	1"=20'
VERT.	1"=5'
DATE	1/16/04
DWG:	DP6
SHEET 49	OF 93

CALL 48 HOURS BEFORE YOU DIG
1-800-553-4344
"It's the Law"
NORTHWEST UTILITIES NOTIFICATION CENTER

STATE OF WASHINGTON
DAVID R. ORANGE
32068
PROFESSIONAL ENGINEER
EXPIRES JANUARY 20, 2004
1-19-04

DESIGN & ENGINEERING DIVISION
DESIGN SECTION

NE 76TH ST (SR-503 TO NE 147TH AVE)
DRAINAGE PLAN STA 35+00 TO STA 40+00

proud past, promising future
CLARK COUNTY
WASHINGTON

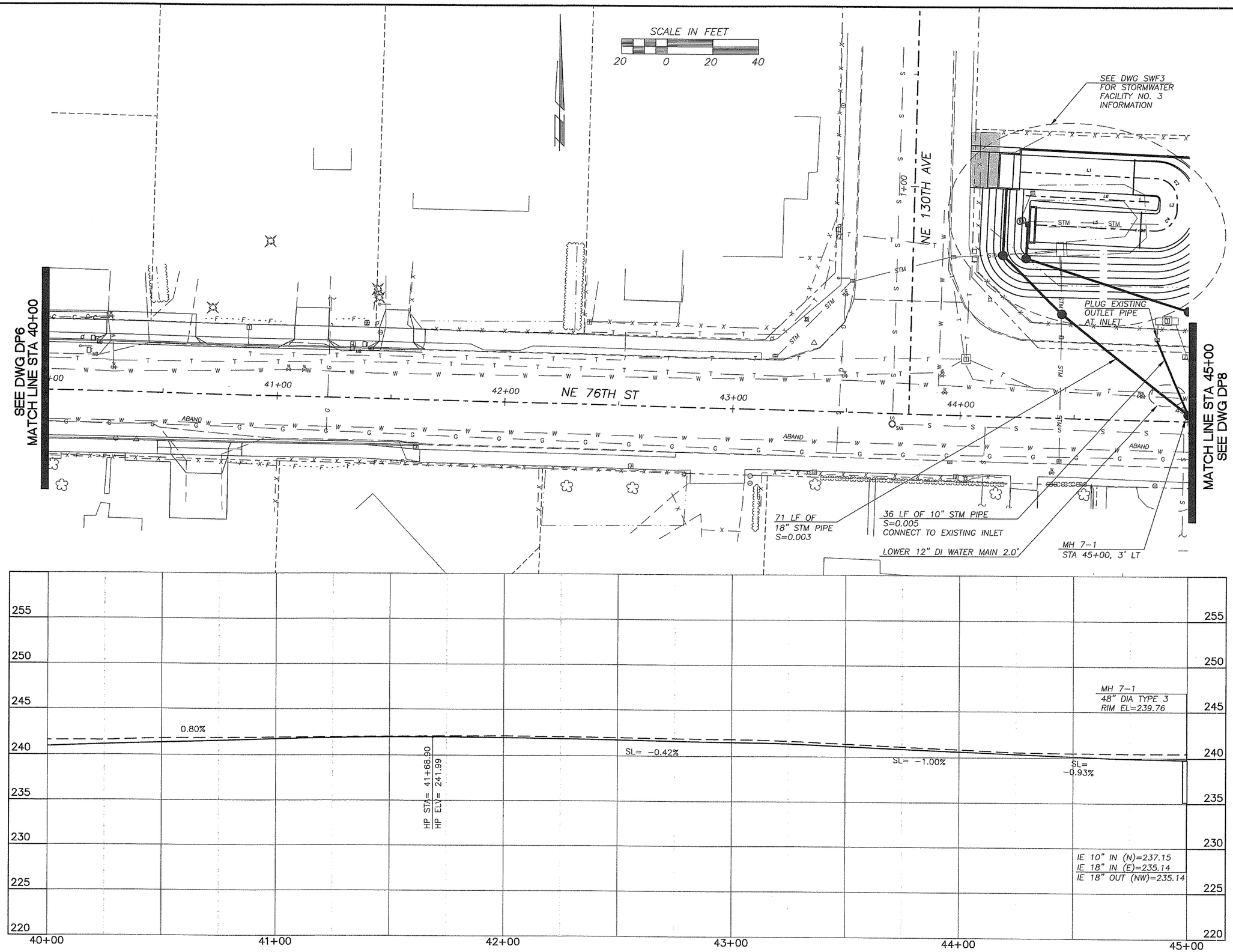

DESIGNED BAK
DRAWN BAK
CRP. 31/1022
HOR. 1"=20'
VERT. 1"=5'
DATE 1/16/04
DWG: DP7
SHEET 50 OF 93

CALL 48 HOURS BEFORE YOU DIG 1-800-553-4344 "It's the Law" NORTHWEST UTILITIES NOTIFICATION CENTER

STEVEN L. GRANGE STATE OF WASHINGTON 32088 REGISTERED PROFESSIONAL ENGINEER
EXPIRES JANUARY 20, 2006
1-16-04

DESIGN & ENGINEERING DIVISION
DESIGN SECTION

NE 76TH ST (SR-503 TO NE 147TH AVE)
DRAINAGE PLAN STA 40+00 TO STA 45+00

proud past, promising future
CLARK COUNTY WASHINGTON

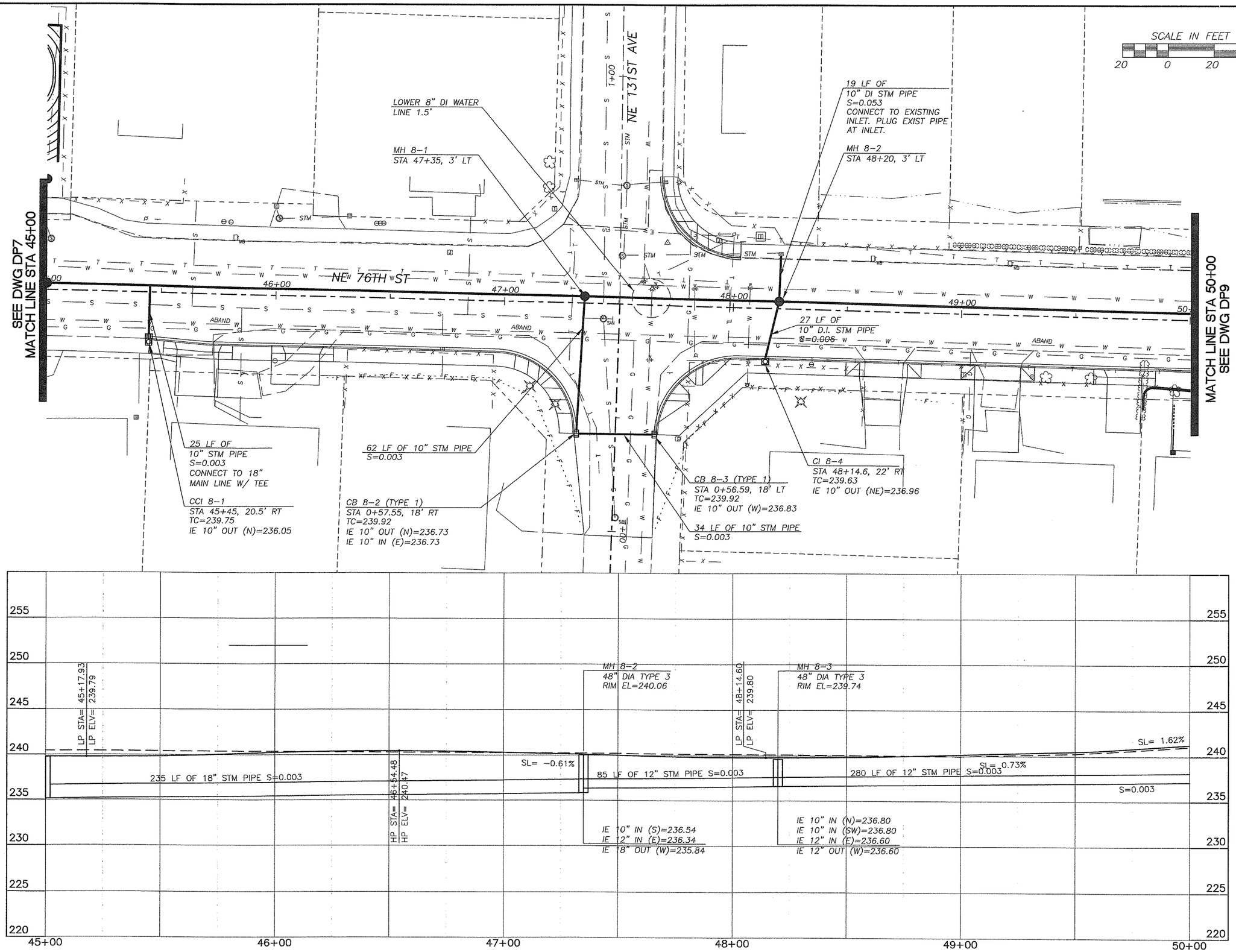

DESIGNED BAK
DRAWN BAK
CRP 311022
HOR. 1"=20'
VERT. 1"=5'
DATE 1/16/04
DWG: DP8
SHEET 51 OF 93

CALL 48 HOURS BEFORE YOU DIG
1-800-553-4344
"It's the Law"
NORTHWEST UTILITIES NOTIFICATION CENTER

LICENSED PROFESSIONAL ENGINEER
STATE OF WASHINGTON
32058
EXPIRES JANUARY 20, 2004
2-19-04

DESIGN & ENGINEERING DIVISION
DESIGN SECTION

NE 76TH ST (SR-503 TO NE 147TH AVE)
DRAINAGE PLAN STA 45+00 TO STA 50+00

proud past, promising future
CLARK COUNTY
WASHINGTON

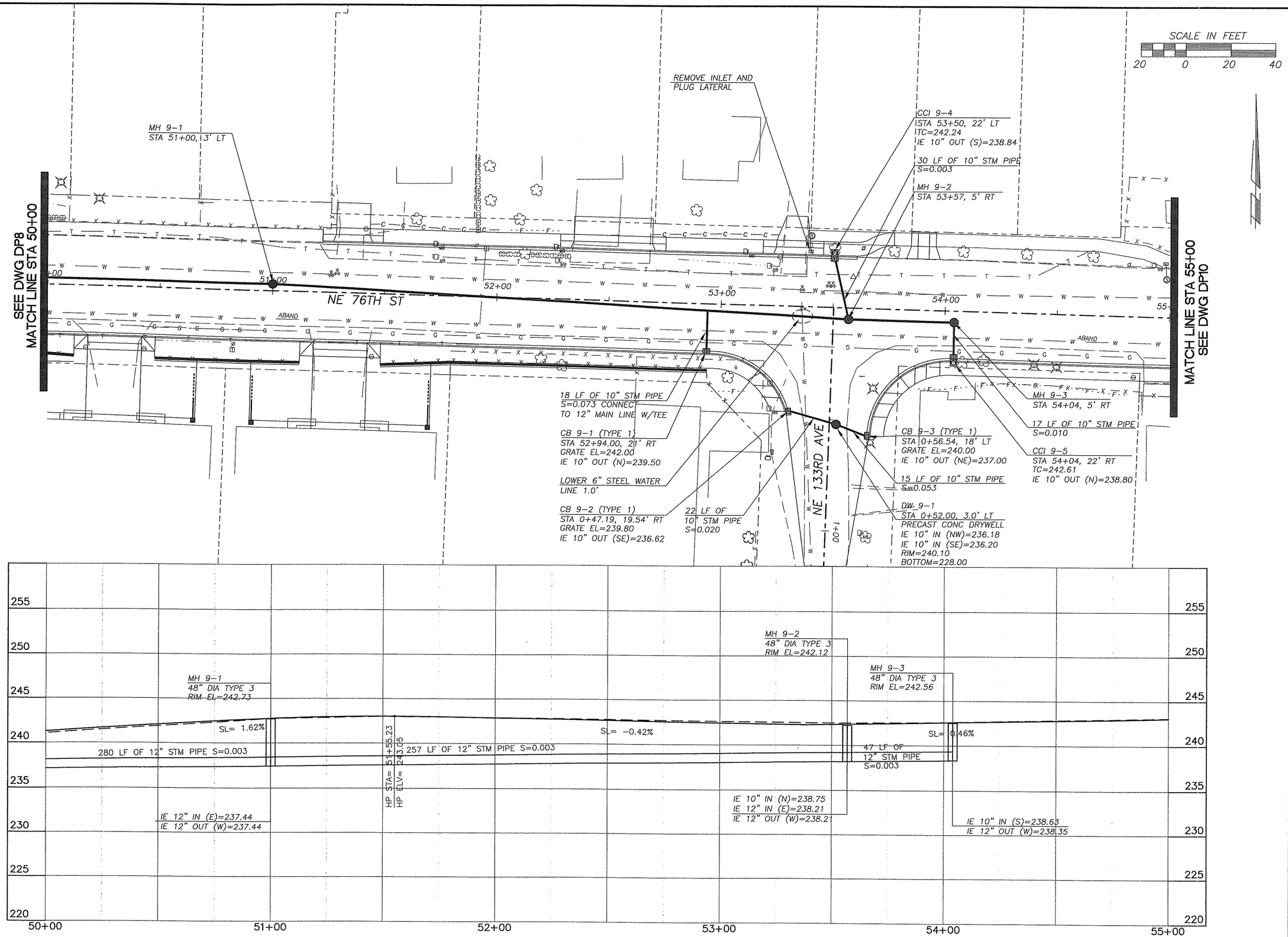

DESIGNED	BAK
DRAWN	BAK
CRP	311022
HOR.	1"=20'
VERT.	1"=5'
DATE	1/16/04
DWG:	DP9
SHEET 52	OF 93

CALL 48 HOURS BEFORE YOU DIG
1-800-553-4344
"It's the Law"
NORTHWEST UTILITIES NOTIFICATION CENTER

LICENSED PROFESSIONAL ENGINEER
STATE OF WASHINGTON
32058
EXPIRES: JANUARY 20, 2006
7-19-04

DESIGN & ENGINEERING DIVISION
DESIGN SECTION

NE 76TH ST (SR-503 TO NE 147TH AVE)
DRAINAGE PLAN STA 50+00 TO STA 55+00

proud past, promising future
CLARK COUNTY
WASHINGTON

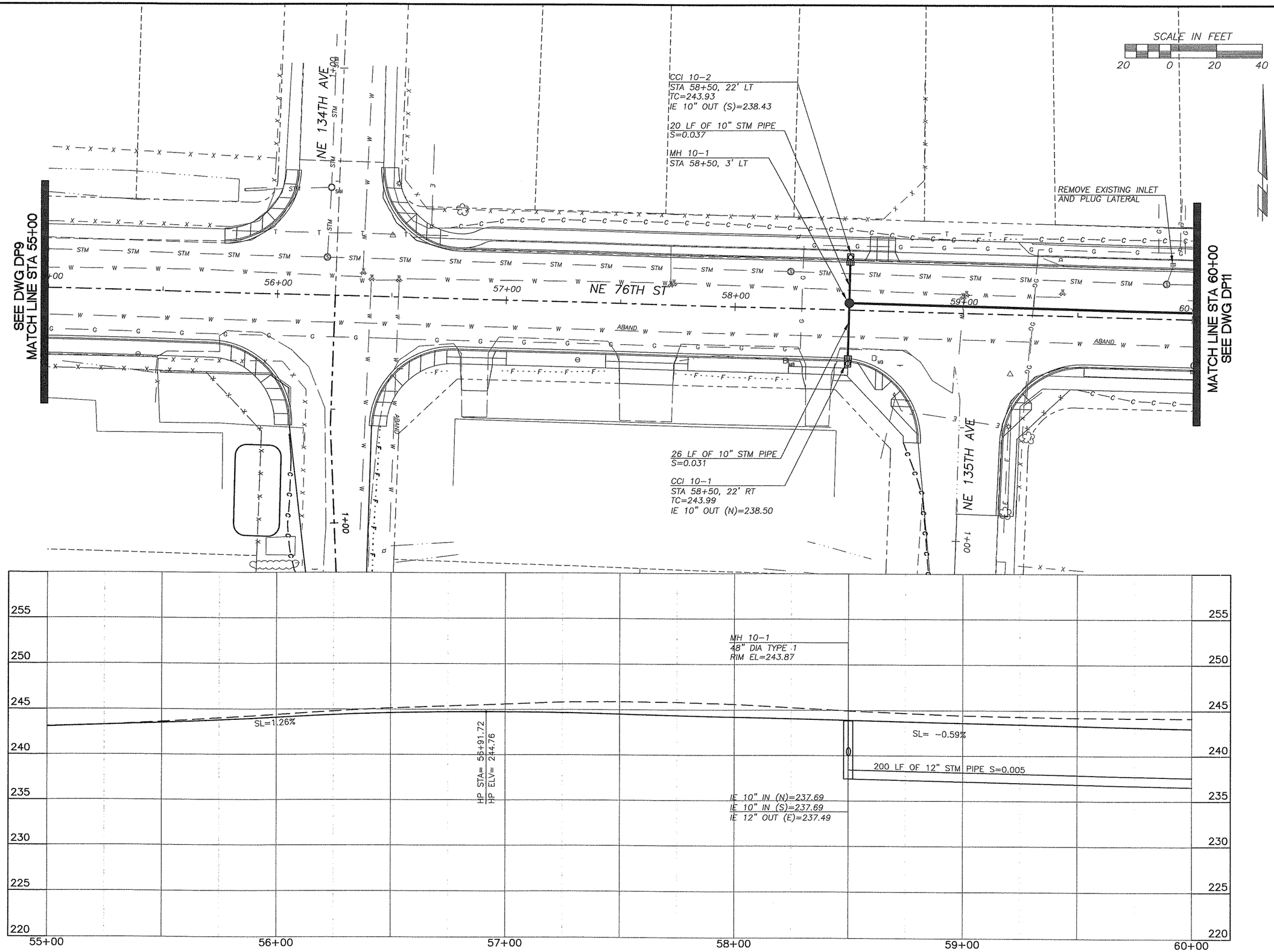

DESIGNED	BAK
DRAWN	BAK
CRP	311022
HOR.	1"=20'
VERT.	1"=5'
DATE	1/16/04
DWG:	DP10
SHEET 53	OF 93

CALL 48 HOURS BEFORE YOU DIG 1-800-553-4344 "It's the Law" NORTHWEST UTILITIES NOTIFICATION CENTER

STATE OF WASHINGTON ROBERT W. PERRY 32068 REGISTERED PROFESSIONAL ENGINEER EXPIRES JANUARY 20, 2006 7-19-04

DESIGN & ENGINEERING DIVISION
DESIGN SECTION

NE 76TH ST (SR-503 TO NE 147TH AVE)
DRAINAGE PLAN STA 55+00 TO STA 60+00

proud past, promising future
CLARK COUNTY WASHINGTON

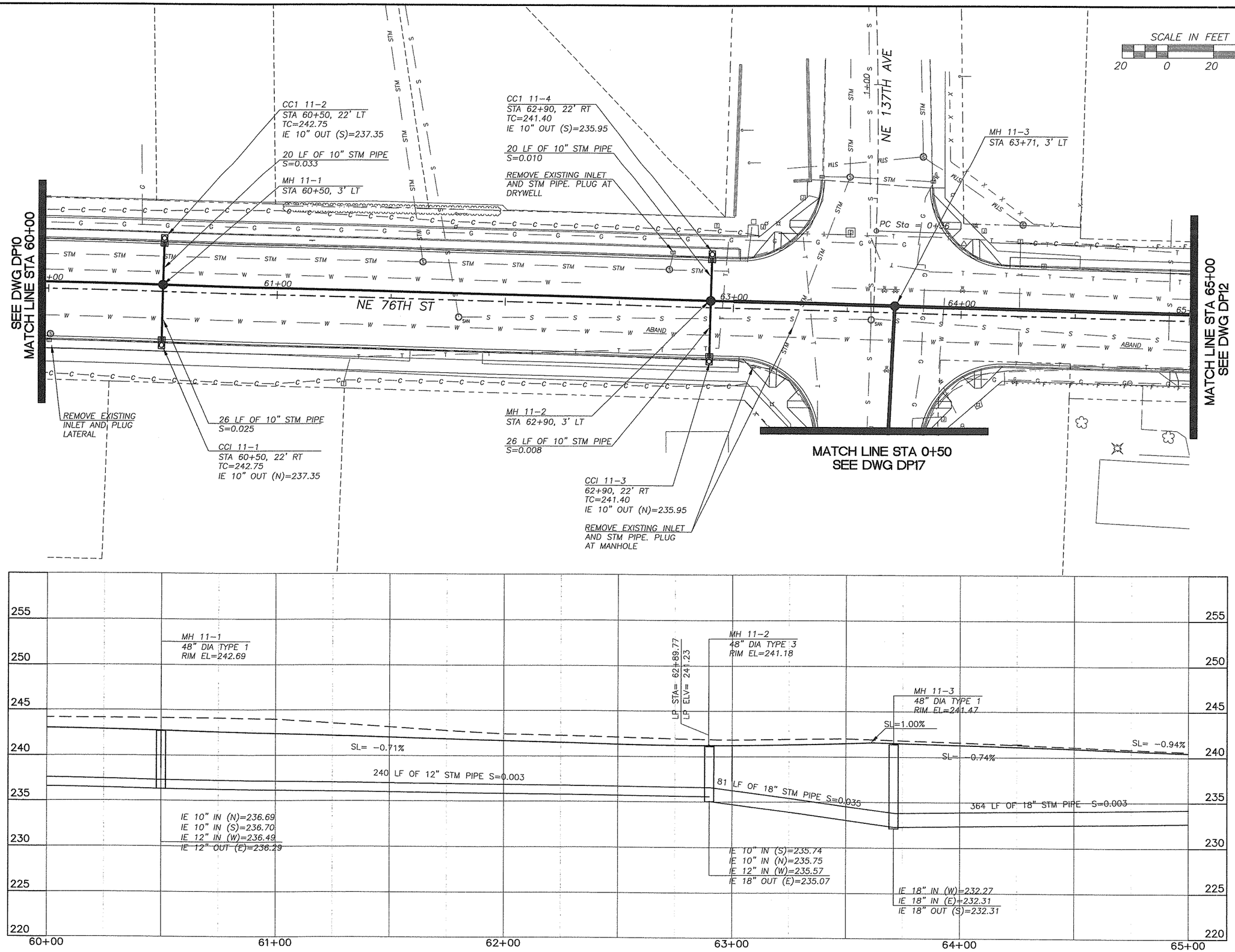

DESIGNED	BAK
DRAWN	BAK
CRP	311022
HOR.	1"=20'
VERT.	1"=5'
DATE	1/16/04
DWG:	DP11
SHEET 54	OF 93

CALL 48 HOURS BEFORE YOU DIG
1-800-553-4344
It's the Law
NORTHWEST UTILITIES NOTIFICATION CENTER

THOMAS D. GRANGE
STATE OF WASHINGTON
32008
REGISTERED PROFESSIONAL ENGINEER
EXPIRES JANUARY 20, 2004
2-19-04

DESIGN & ENGINEERING DIVISION
DESIGN SECTION

NE 76TH ST (SR-503 TO NE 147TH AVE)
DRAINAGE PLAN STA 60+00 TO STA 65+00

proud past, promising future
CLARK COUNTY
WASHINGTON

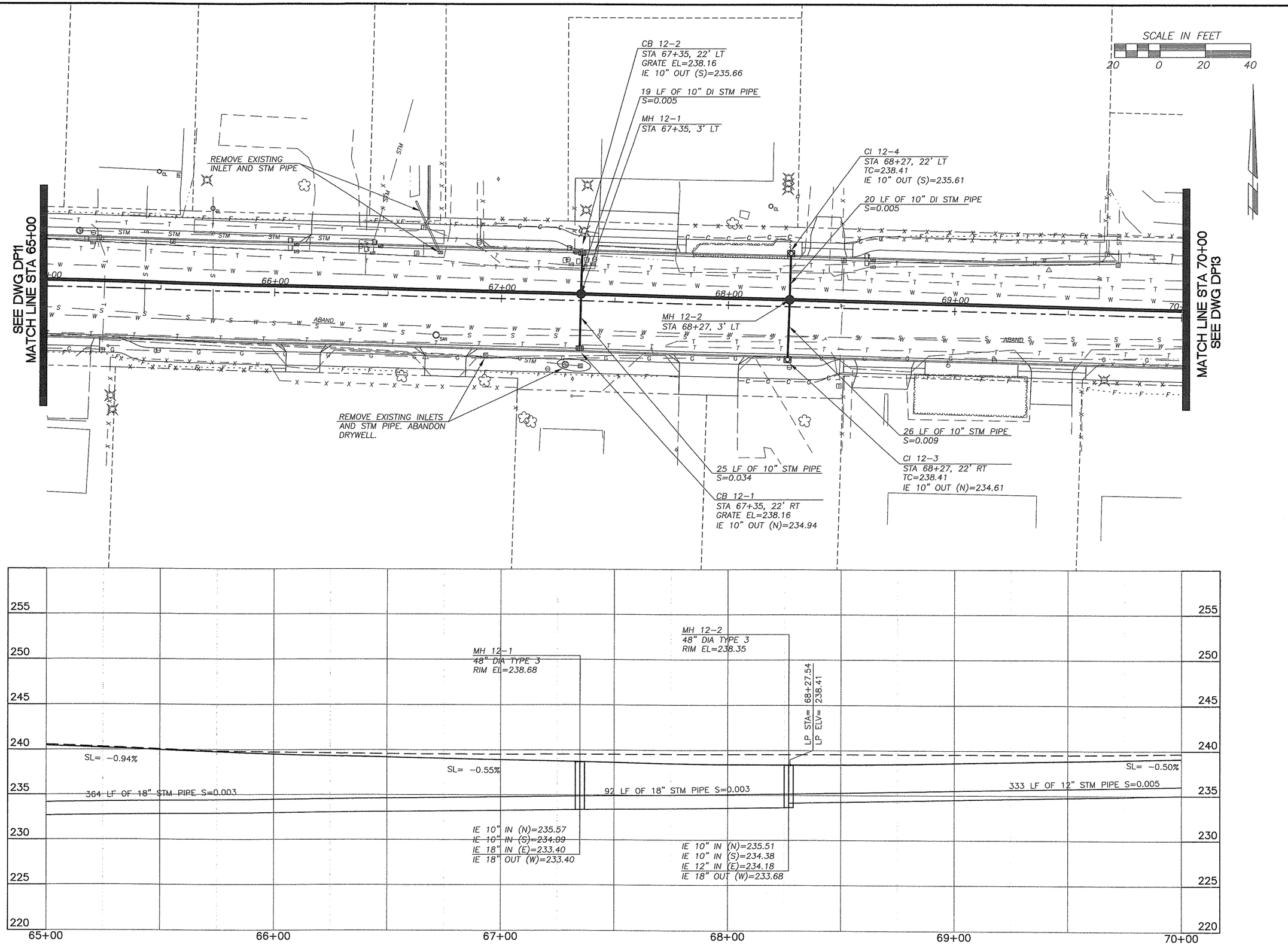

DESIGNED	BAK
DRAWN	BAK
CRP	311022
HOR.	1"=20'
VERT.	1"=5'
DATE	1/16/04
DWG:	DP12
SHEET 55	OF 93

CALL 48 HOURS BEFORE YOU DIG
1-800-553-4344
"It's the Law"
NORTHWEST UTILITIES NOTIFICATION CENTER

STATE OF WASHINGTON
BRIAN E. GRANGE
32068
REGISTERED PROFESSIONAL ENGINEER
EXPIRES: JANUARY 20, 2004
2-19-04

DESIGN & ENGINEERING DIVISION
DESIGN SECTION

NE 76TH ST (SR-503 TO NE 147TH AVE)
DRAINAGE PLAN STA 65+00 TO STA 70+00

proud past, promising future
CLARK COUNTY
WASHINGTON

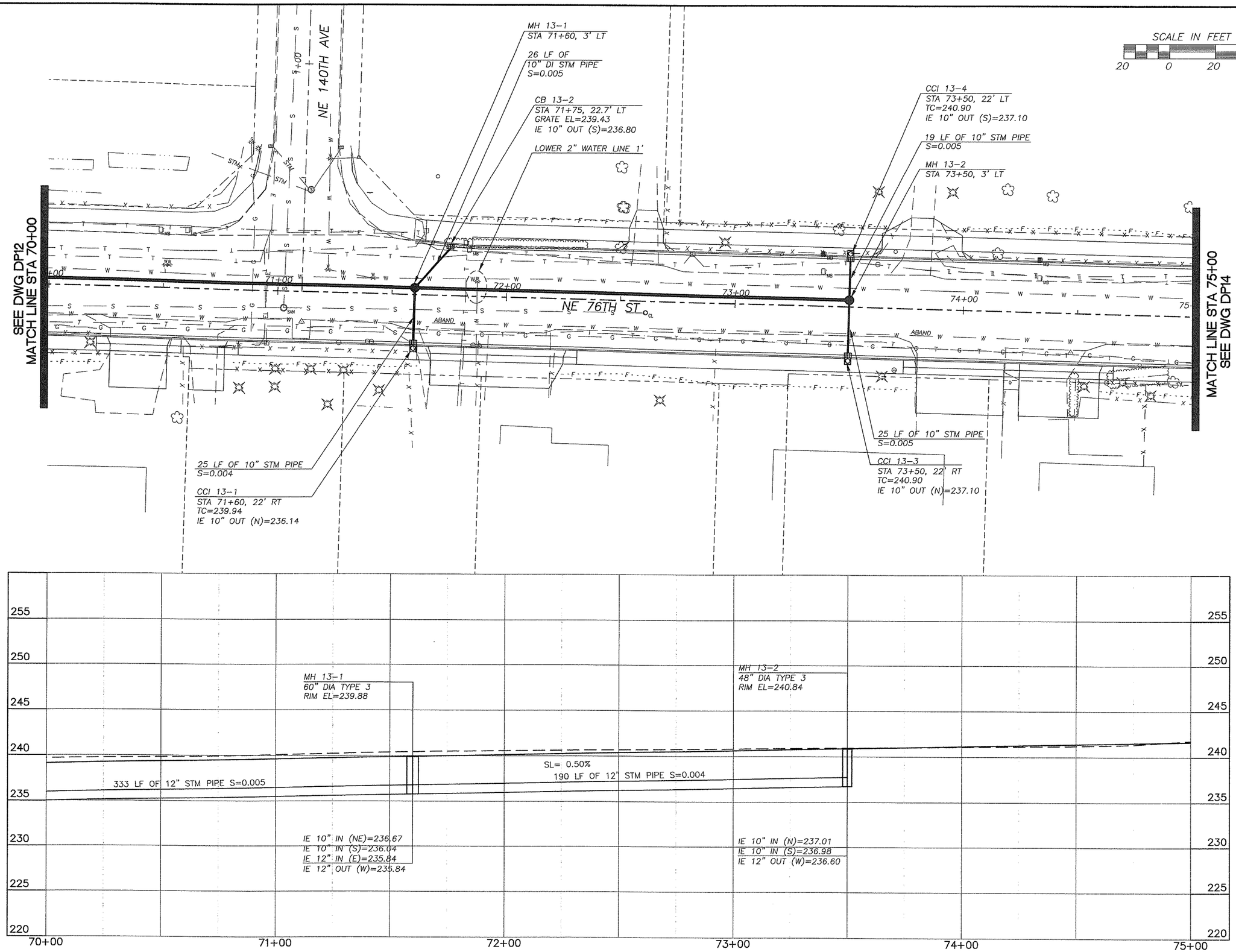

DESIGNED	BAK
DRAWN	BAK
CRP	311022
HOR.	1"=20'
VERT.	1"=5'
DATE	1/16/04
DWG:	DP13
SHEET 56	OF 93

CALL 48 HOURS BEFORE YOU DIG 1-800-553-4344 "It's the Law" NORTHWEST UTILITIES NOTIFICATION CENTER

STATE OF WASHINGTON GRANT W. MARSHALL 32088 REGISTERED PROFESSIONAL ENGINEER
EXPIRES JANUARY 20, 2004
7-19-04

DESIGN & ENGINEERING DIVISION
DESIGN SECTION

NE 76TH ST (SR-503 TO NE 147TH AVE)
DRAINAGE PLAN STA 70+00 TO STA 75+00

proud past, promising future
CLARK COUNTY WASHINGTON

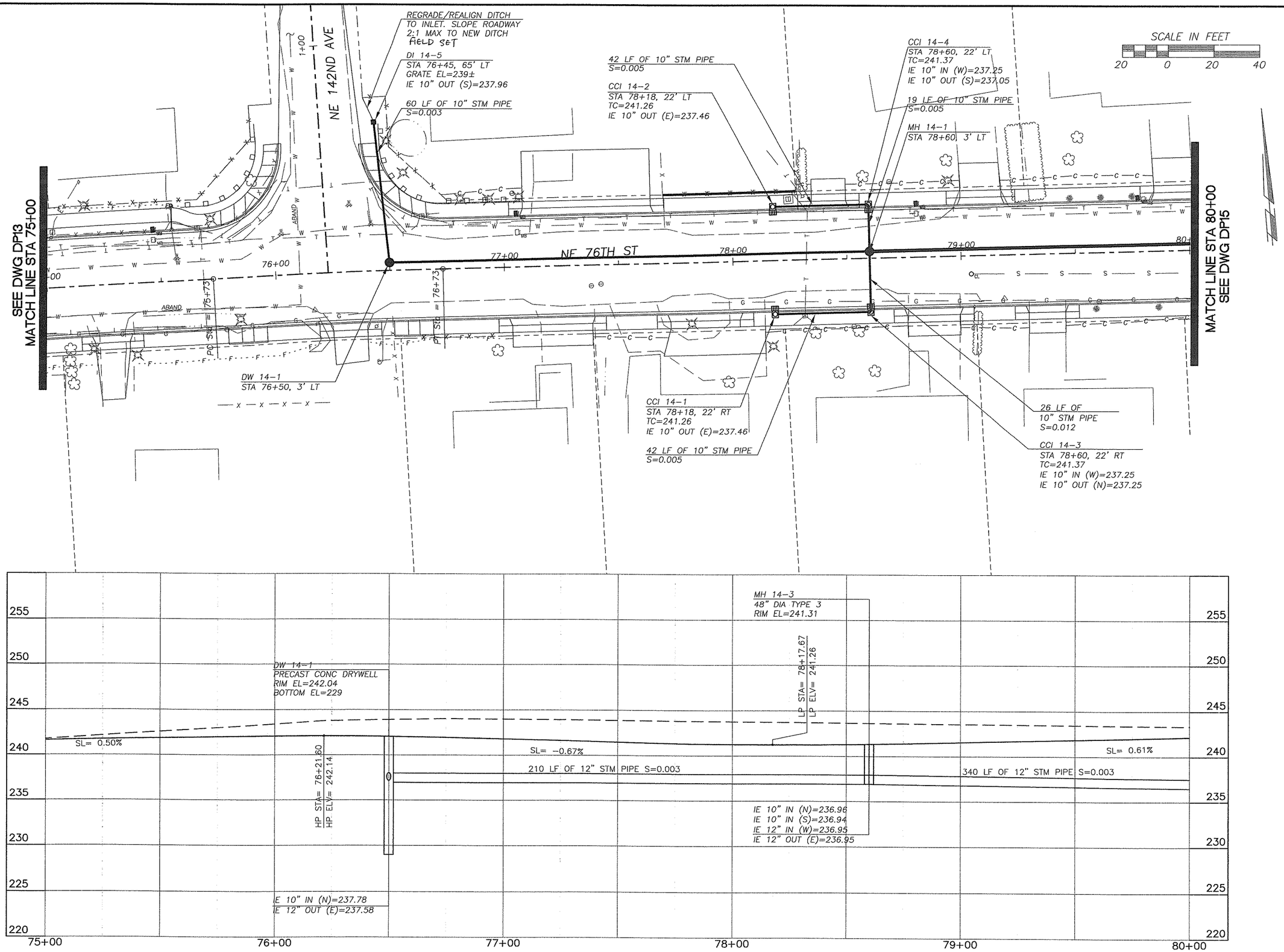

DESIGNED	BAK
DRAWN	BAK
CRP	311022
HOR.	1"=20'
VERT.	1"=5'
DATE	1/16/04
DWG.	DP14
SHEET 57	OF 93

CALL 48 HOURS BEFORE YOU DIG
1-800-553-4344
"It's the Law"
NORTHWEST UTILITIES NOTIFICATION CENTER

STATE OF WASHINGTON
DONALD A. BRANDT
32068
REGISTERED PROFESSIONAL ENGINEER
EXPIRES JANUARY 20, 2004
1-19-04

DESIGN & ENGINEERING DIVISION
DESIGN SECTION

NE 76TH ST (SR-503 TO NE 147TH AVE)
DRAINAGE PLAN STA 75+00 TO STA 80+00

proud past, promising future
CLARK COUNTY
WASHINGTON

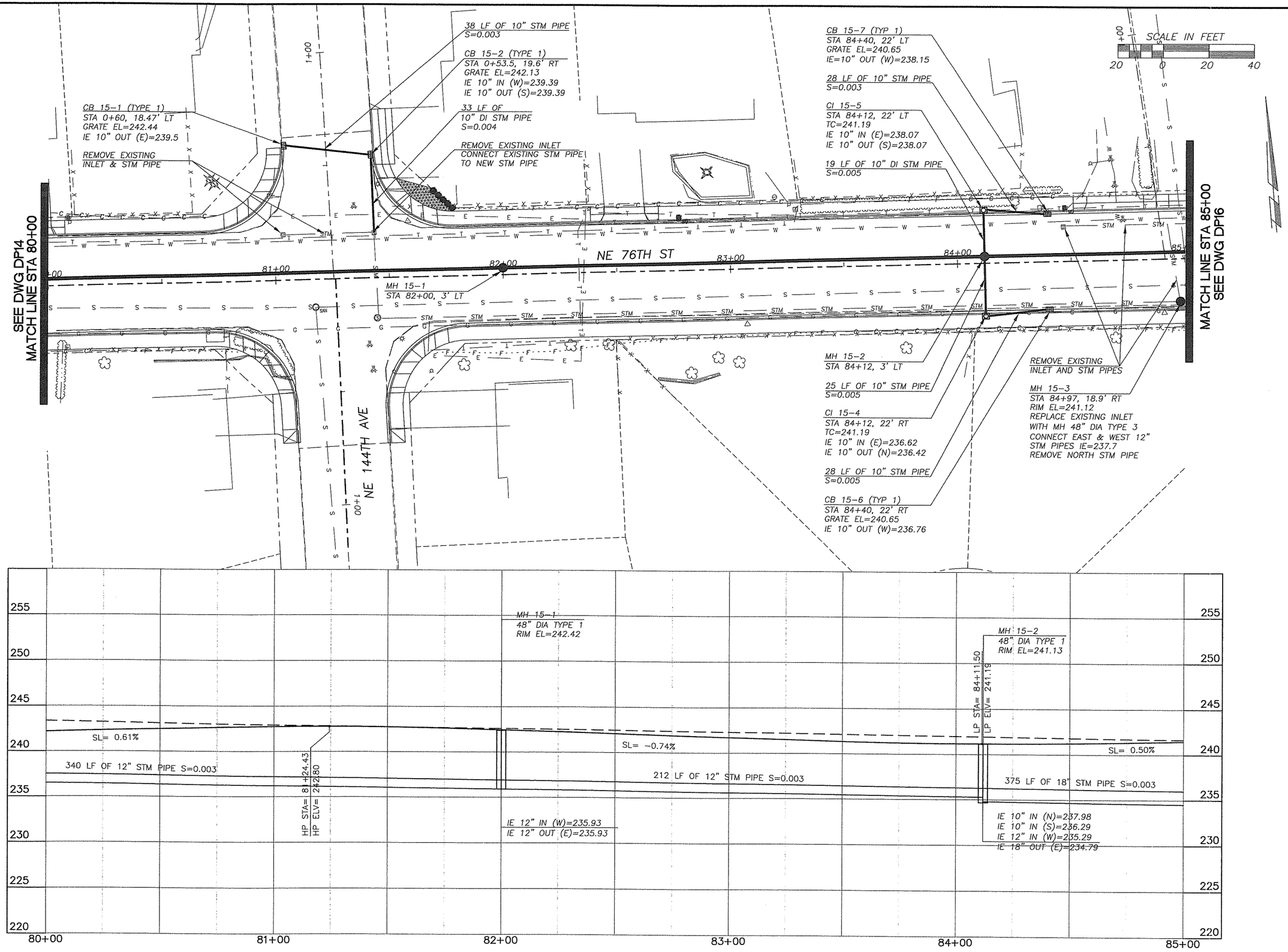

DESIGNED BAK
DRAWN BAK
CRP 311022
HOR. 1"=20'
VERT. 1"=5'
DATE 1/16/04
DWG: DP15
SHEET 58 OF 93

CALL 48 HOURS BEFORE YOU DIG
1-800-553-4344
"It's the Law"
NORTHWEST UTILITIES NOTIFICATION CENTER

LARRY D. GRANGER
STATE OF WASHINGTON
PROFESSIONAL ENGINEER
EXPIRES: 12/31/04
7-16-04

DESIGN & ENGINEERING DIVISION
DESIGN SECTION

NE 76TH ST (SR-503 TO NE 147TH AVE)
DRAINAGE PLAN STA 80+00 TO STA 85+00

proud past, promising future
CLARK COUNTY
WASHINGTON

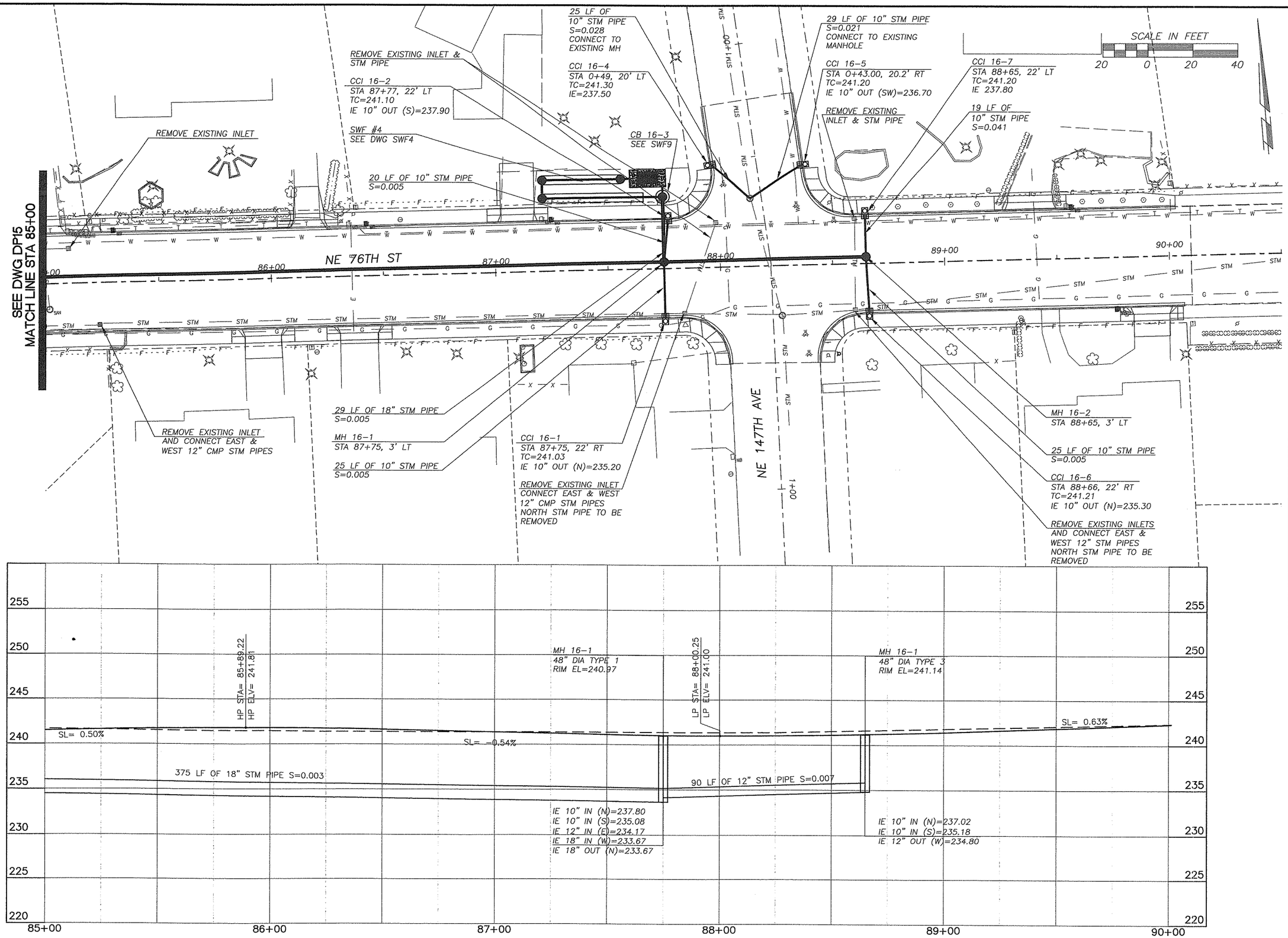

DESIGNED BAK
DRAWN BAK
CRP 311022
HOR. 1"=20'
VERT. 1"=5'
DATE 1/16/04
DWG: DP16
SHEET 59 OF 93

CALL 48 HOURS BEFORE YOU DIG
1-800-553-4344
"It's the Law"
NORTHWEST UTILITIES NOTIFICATION CENTER

STEPHANIE D. GRANGER
STATE OF WASHINGTON
PROFESSIONAL ENGINEER
EXPIRES JUNE 30, 2004
7-16-04

DESIGN & ENGINEERING DIVISION
DESIGN SECTION

NE 76TH ST (SR-503 TO NE 147TH AVE)
DRAINAGE PLAN STA 85+00 TO STA 90+00

proud past, promising future
CLARK COUNTY
WASHINGTON

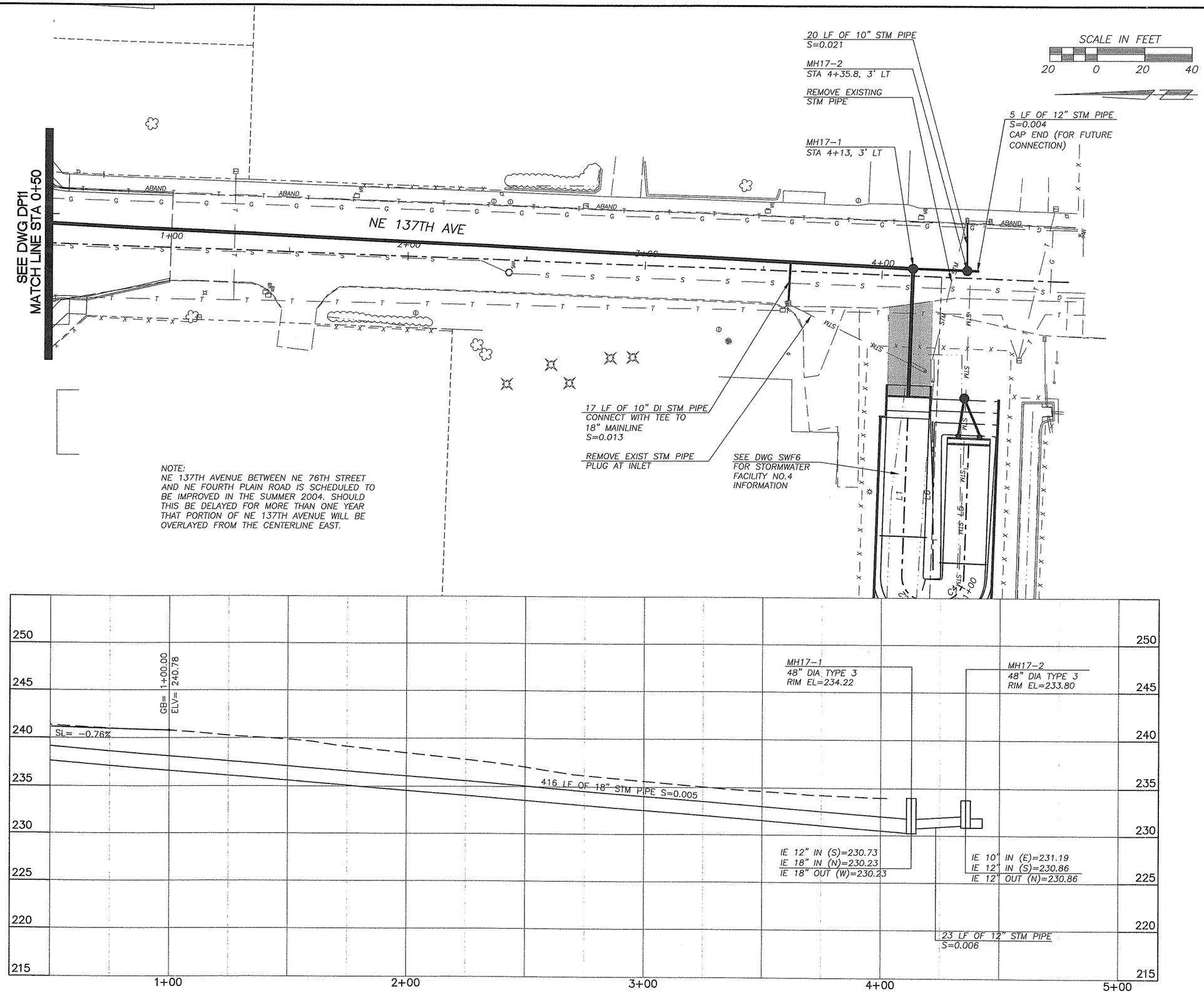

DESIGNED	BAK
DRAWN	BAK
CRP	311022
HOR.	1"=20'
VERT.	1"=5'
DATE	1/16/04
DWG:	DP17
SHEET 60	OF 93

CALL 48 HOURS BEFORE YOU DIG
1-800-553-4344
"It's the Law"
NORTHWEST UTILITIES NOTIFICATION CENTER

LEONARD D. GRANDE
STATE OF WASHINGTON
20248
REGISTERED PROFESSIONAL ENGINEER
EXPIRES JANUARY 20, 2005
1-14-04

DESIGN & ENGINEERING DIVISION
DESIGN SECTION

NE 76TH ST (SR-503 TO NE 147TH AVE)
DRAINAGE PLAN NE 137TH AVE STA 0+50 TO STA 4+50

proud past, promising future
CLARK COUNTY
WASHINGTON

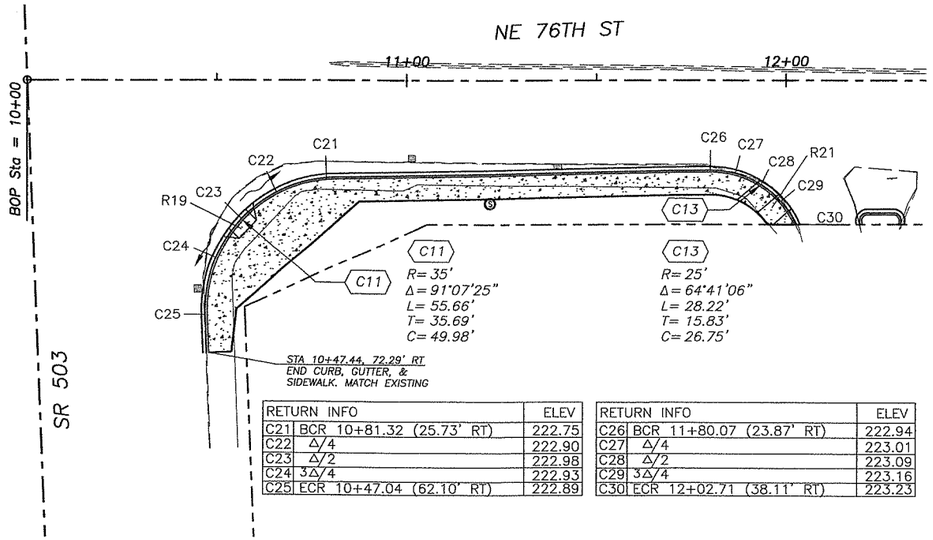

RETURN INFO		ELEV
C21	BCR 10+81.32 (25.73' RT)	222.75
C22	Δ/4	222.90
C23	Δ/2	222.98
C24	3Δ/4	222.93
C25	ECR 10+47.04 (62.10' RT)	222.89

RETURN INFO		ELEV
C26	BCR 11+80.07 (23.87' RT)	222.94
C27	Δ/4	223.01
C28	Δ/2	223.09
C29	3Δ/4	223.16
C30	ECR 12+02.71 (38.11' RT)	223.23

*NOTE:
ALL CENTERLINE ELEVATIONS ARE TOP OF ASPHALT.
ALL CURB ELEVATIONS ARE TOP FACE OF CURB (TFC)

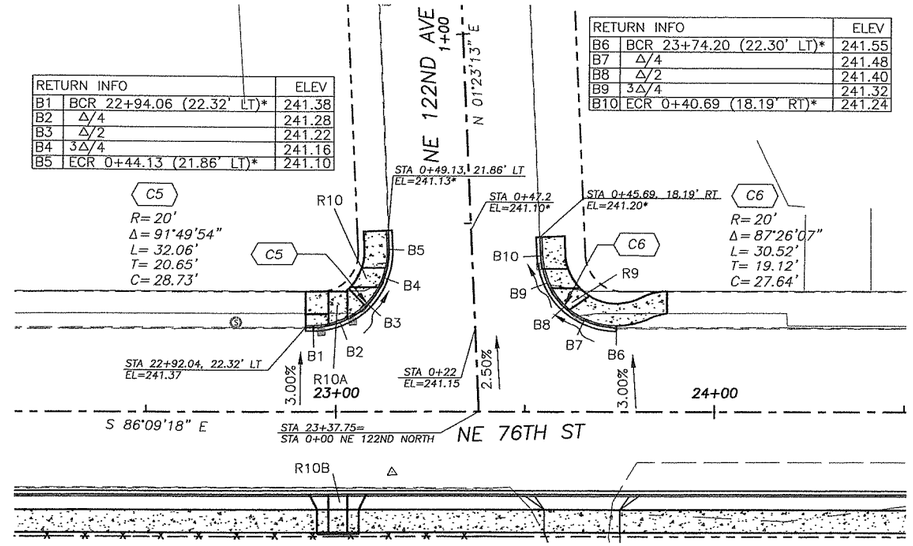

RETURN INFO		ELEV
B1	BCR 22+94.06 (22.32' LT)*	241.38
B2	Δ/4	241.28
B3	Δ/2	241.22
B4	3Δ/4	241.16
B5	ECR 0+44.13 (21.86' LT)*	241.10

RETURN INFO		ELEV
B6	BCR 23+74.20 (22.30' LT)*	241.55
B7	Δ/4	241.48
B8	Δ/2	241.40
B9	3Δ/4	241.32
B10	ECR 0+40.69 (18.19' RT)*	241.24

SCALE IN FEET
20 0 20 40

CL OF RAMPS @ FACE

#	STATION	OFFSET	TYPE
R1	0+34.2	21.6 RT	F2
R2	18+22.9	22.7 LT	F2
R3	18+29.5	26.6 RT	F1
R4	0+43.5	21.9 RT	F1
R5	0+45.4	21.2 LT	F2
R6	17+57.1	26.1 RT	F2
R7	17+54.2	23.4 LT	F2
R8	0+36.7	21.1 LT	F2
R9	0+34.4	19.2 RT	F2
R10	0+36.4	23.4 LT	F2
R10A	23+00.6	23.5 LT	F4
R10B	23+00.6	22.0 RT	F4
R11	0+33.4	20.7 RT	F2
R12	28+86.9	22.0 LT	F2
R13	28+88.4	26.3 RT	F1
R14	0+43.7	23.6 LT	F1
R15	0+41.5	23.4 RT	F1
R16	28+11.3	26.3 RT	F1
R17	28+11.4	22.8 LT	F4
R18	0+35.9	22.8 LT	F2
R19	10+56.2	37.1 RT	F2
R20	16+53.2	31.3 RT	F2
R21	12+00.0	32.0 RT	F2

* MATCH EXISTING

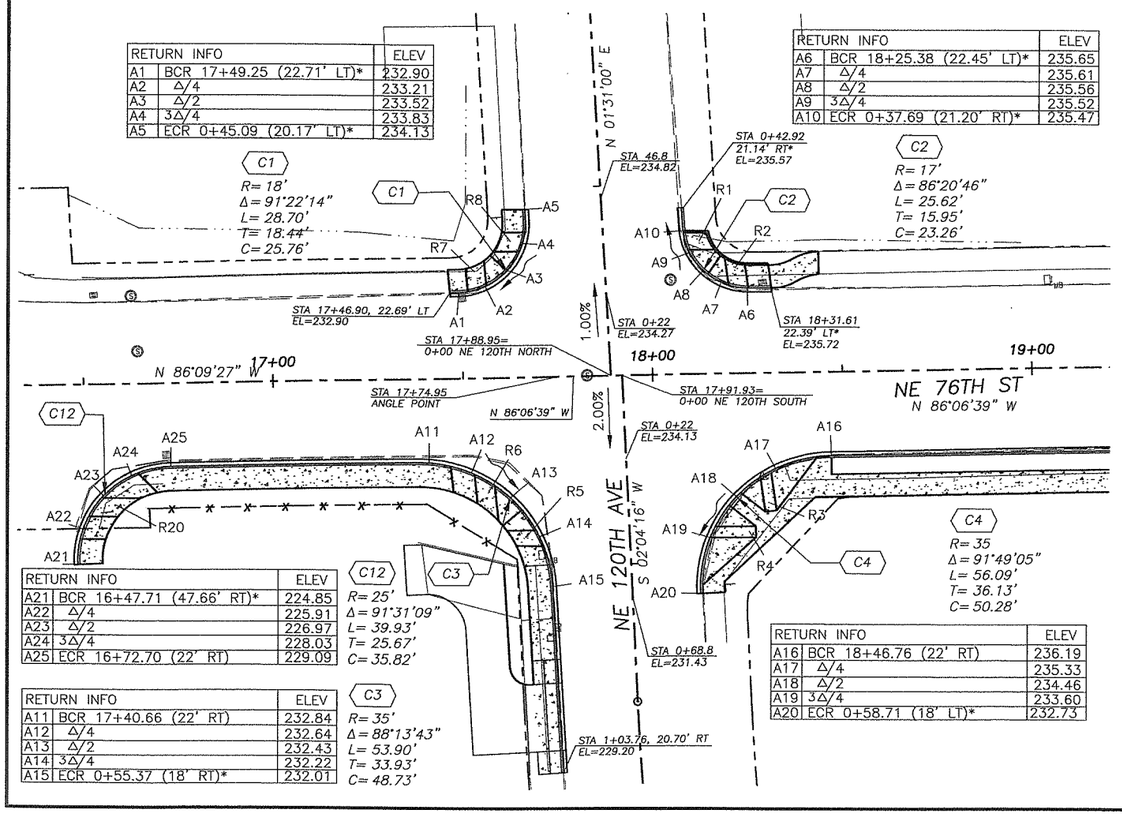

RETURN INFO		ELEV
A1	BCR 17+49.25 (22.71' LT)*	232.90
A2	Δ/4	233.21
A3	Δ/2	233.52
A4	3Δ/4	233.83
A5	ECR 0+45.09 (20.17' LT)*	234.13

RETURN INFO		ELEV
A6	BCR 18+25.38 (22.45' LT)*	235.65
A7	Δ/4	235.61
A8	Δ/2	235.56
A9	3Δ/4	235.52
A10	ECR 0+37.69 (21.20' RT)*	235.47

RETURN INFO		ELEV
A21	BCR 16+47.71 (47.66' RT)*	224.85
A22	Δ/4	225.91
A23	Δ/2	226.97
A24	3Δ/4	228.03
A25	ECR 16+72.70 (22' RT)	229.09

RETURN INFO		ELEV
A11	BCR 17+40.66 (22' RT)	232.84
A12	Δ/4	232.64
A13	Δ/2	232.43
A14	3Δ/4	232.22
A15	ECR 0+55.37 (18' RT)*	232.01

RETURN INFO		ELEV
A16	BCR 18+46.76 (22' RT)	236.19
A17	Δ/4	235.33
A18	Δ/2	234.46
A19	3Δ/4	233.60
A20	ECR 0+58.71 (18' LT)*	232.73

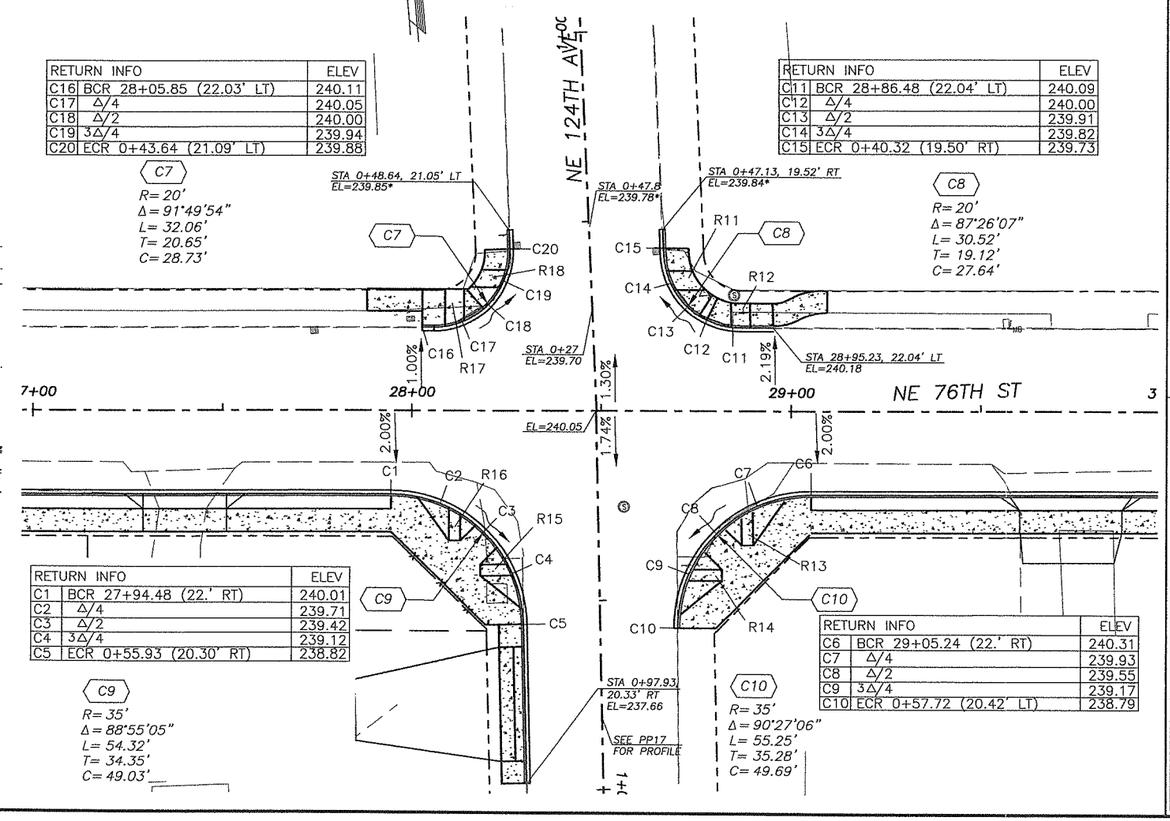

RETURN INFO		ELEV
C16	BCR 28+05.85 (22.03' LT)	240.11
C17	Δ/4	240.05
C18	Δ/2	240.00
C19	3Δ/4	239.94
C20	ECR 0+43.64 (21.09' LT)	239.88

RETURN INFO		ELEV
C11	BCR 28+86.48 (22.04' LT)	240.09
C12	Δ/4	240.00
C13	Δ/2	239.91
C14	3Δ/4	239.82
C15	ECR 0+40.32 (19.50' RT)	239.73

RETURN INFO		ELEV
C1	BCR 27+94.48 (22.' RT)	240.01
C2	Δ/4	239.71
C3	Δ/2	239.42
C4	3Δ/4	239.12
C5	ECR 0+55.93 (20.30' RT)	238.82

RETURN INFO		ELEV
C6	BCR 29+05.24 (22.' RT)	240.31
C7	Δ/4	239.93
C8	Δ/2	239.55
C9	3Δ/4	239.17
C10	ECR 0+57.72 (20.42' LT)	238.79

DESIGNED BAK
DRAWN BAK
CRP 311022
HOR. 1"=20'
VERT. 1"=5'
DATE 1/16/04
DWG: 101
SHEET 61 OF 93

CALL 48 HOURS BEFORE YOU DIG
1-800-553-4344
"It's the Law"
NORTHWEST UTILITIES NOTIFICATION CENTER

STATE OF WASHINGTON
JAMES A. KLUG
38586
REGISTERED PROFESSIONAL ENGINEER
EXPIRES APRIL 7, 2004
2-17-04

DESIGN & ENGINEERING DIVISION
DESIGN SECTION

NE 76TH ST (SR-503 TO NE 147TH AVE)
INTERSECTION PLAN

proud past, promising future
CLARK COUNTY
WASHINGTON

RETURN INFO		ELEV
D1	BCR 33+18.01 (22.65' LT)*	240.58
D2	Δ/4	240.45
D3	Δ/2	240.33
D4	3Δ/4	240.20
D5	ECR 0+41.88 (20.68' LT)*	240.07

RETURN INFO		ELEV
D6	BCR 34+00.57 (22.00' LT)	240.28
D7	Δ/4	240.23
D8	Δ/2	240.18
D9	3Δ/4	240.13
D10	ECR 0+41.78 (20.92' RT)*	240.07

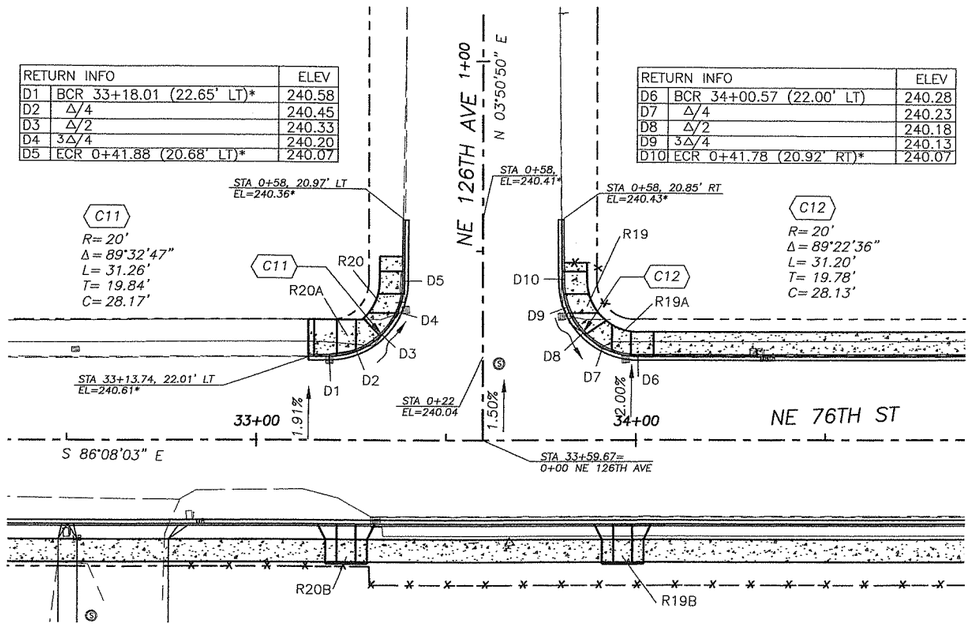

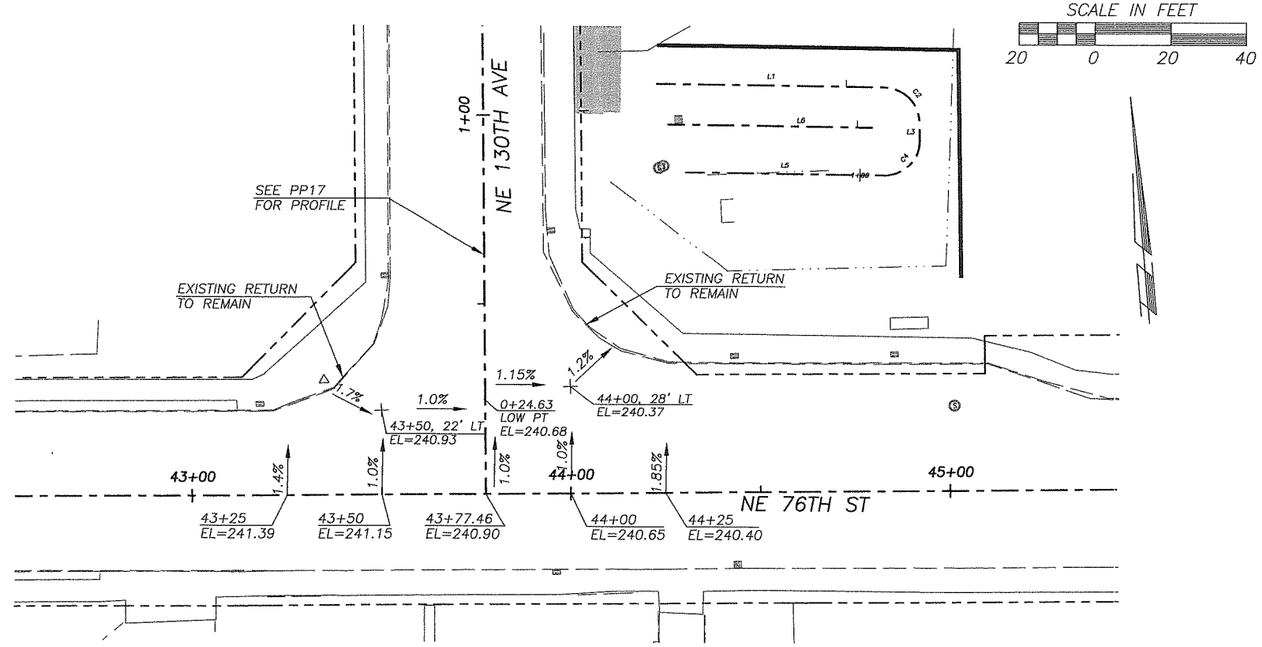

RETURN INFO		ELEV
E1	BCR 36+49.09 (22' LT)	239.31
E2	Δ/4	239.36
E3	Δ/2	239.41
E4	3Δ/4	239.45
E5	ECR 0+43.01 (22.81' LT)	239.50

RETURN INFO		ELEV
E6	BCR 37+42.08 (22.00' LT)	239.13
E7	Δ/4	239.22
E8	Δ/2	239.30
E9	3Δ/4	239.65
E10	ECR 0+56.84 (13.30' RT)	240.00

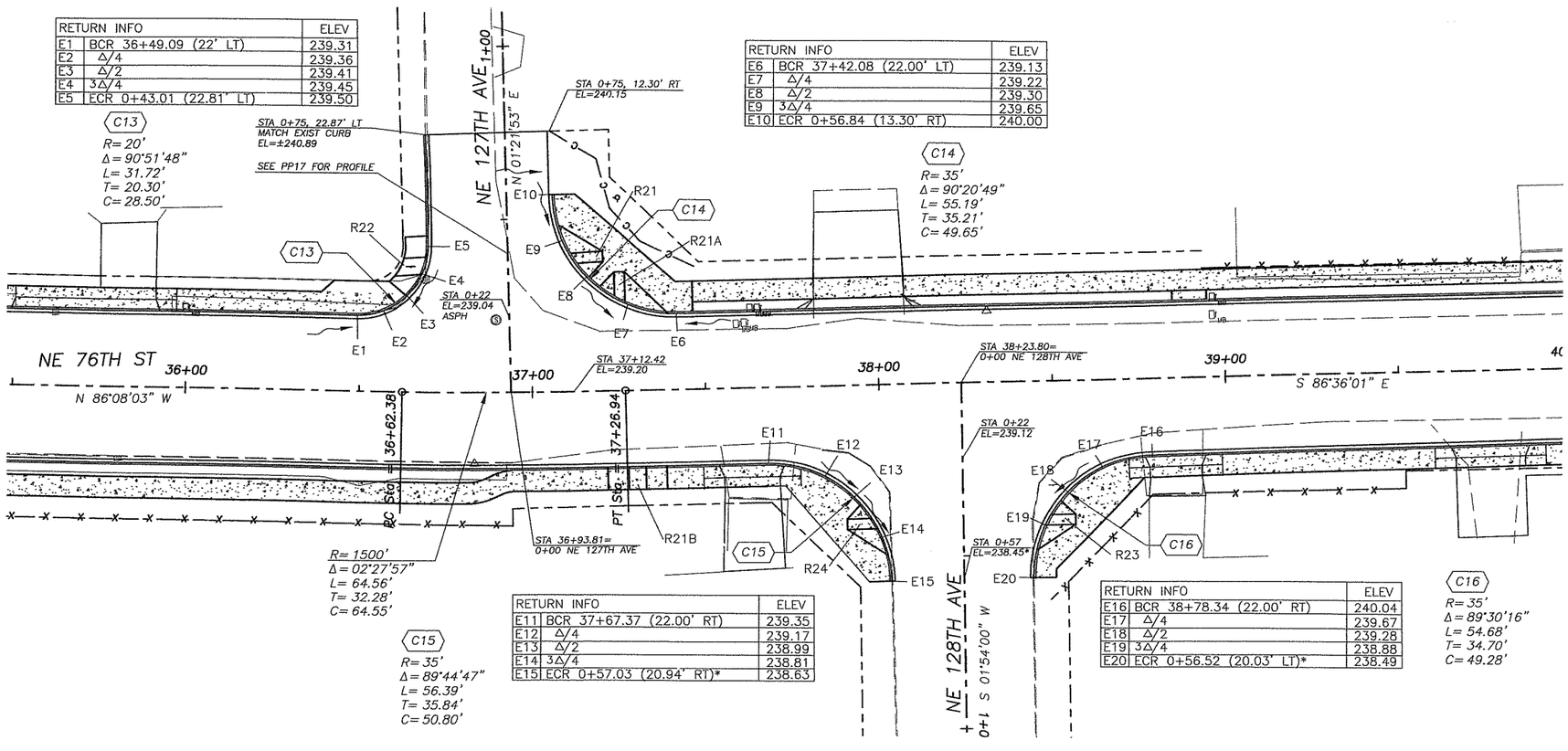

RETURN INFO		ELEV
E11	BCR 37+67.37 (22.00' RT)	239.35
E12	Δ/4	239.17
E13	Δ/2	238.99
E14	3Δ/4	238.81
E15	ECR 0+57.03 (20.94' RT)*	238.63

RETURN INFO		ELEV
E16	BCR 38+78.34 (22.00' RT)	240.04
E17	Δ/4	239.67
E18	Δ/2	239.28
E19	3Δ/4	238.88
E20	ECR 0+56.52 (20.03' LT)*	238.49

C16
R= 35'
Δ= 89°30'16"
L= 54.68'
T= 34.70'
C= 49.28'

CL OF RAMPS @ FACE

#	STATION	OFFSET	TYPE
R19	0+35.7	21.5 RT	F2
R19A	33+96.2	22.5 LT	F2
R19B	33+96.6	22.0 RT	F4
R20	0+27.4	21.9 LT	F2
R20A	33+23.9	22.6 LT	F4
R20B	33+23.9	22.0 RT	F4
R21	0+38.3	18.5 RT	F1
R21A	37+25.8	26.0 LT	F1
R21B	37+29.8	22.0 RT	F3
R22	0+37.2	23.9 LT	F2
R23	0+39.7	24.3 LT	F1
R24	0+40.4	25.4 RT	F1

* MATCH EXISTING

*NOTE:
ALL CENTERLINE ELEVATIONS ARE TOP OF ASPHALT.
ALL CURB ELEVATIONS ARE TOP FACE OF CURB (TFC)

DESIGNED	BAK
DRAWN	BAK
CRP	311022
HOR.	1"=20'
VERT.	1"=5'
DATE	1/16/04
DWG:	102
SHEET 62	OF 93

CALL 48 HOURS BEFORE YOU DIG
1-800-553-4344
"It's the Law"
NORTHWEST UTILITIES NOTIFICATION CENTER

STATE OF WASHINGTON
BRUCE A. KLUG
32858
REGISTERED PROFESSIONAL ENGINEER
EXPIRES APRIL 7, 2004
2-17-04

DESIGN & ENGINEERING DIVISION
DESIGN SECTION

NE 76TH ST (SR-503 TO NE 147TH AVE)
INTERSECTION PLAN

proud past, promising future
CLARK COUNTY
WASHINGTON

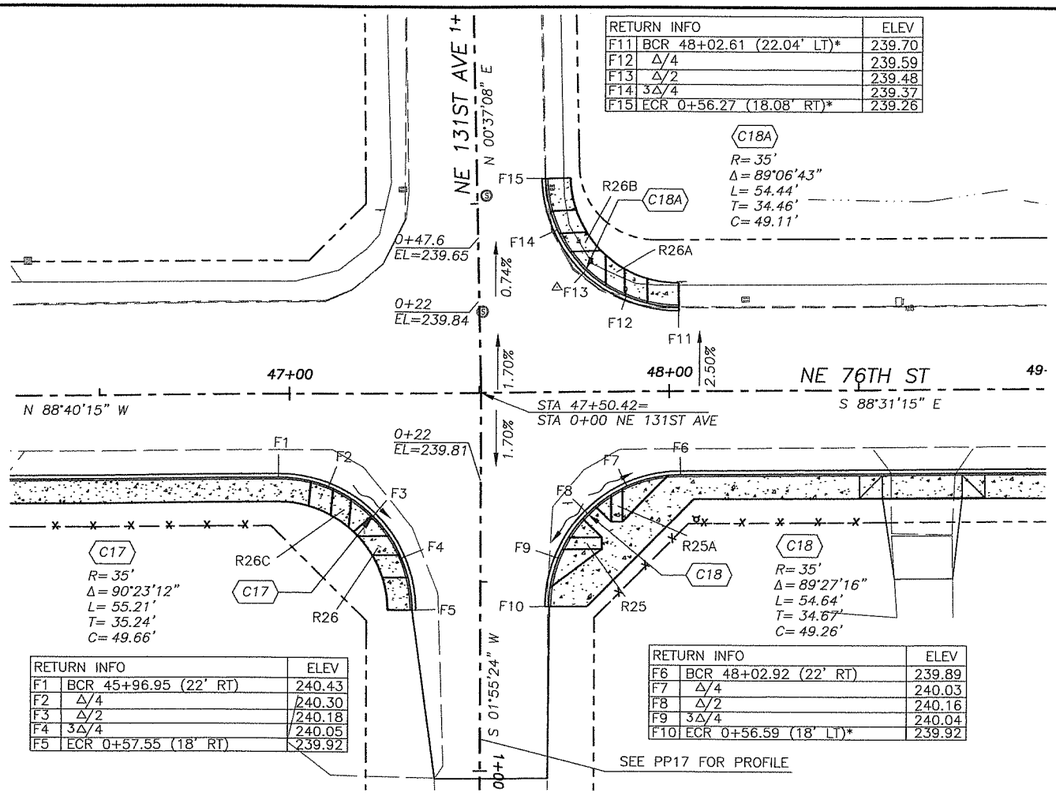

RETURN INFO		ELEV
F1	BCR 45+96.95 (22' RT)	240.43
F2	Δ/4	240.30
F3	Δ/2	240.18
F4	3Δ/4	240.05
F5	ECR 0+57.55 (18' RT)	239.92

RETURN INFO		ELEV
F6	BCR 48+02.92 (22' RT)	239.89
F7	Δ/4	240.03
F8	Δ/2	240.16
F9	3Δ/4	240.04
F10	ECR 0+56.59 (18' LT)*	239.92

RETURN INFO		ELEV
F11	BCR 48+02.61 (22.04' LT)*	239.70
F12	Δ/4	239.59
F13	Δ/2	239.48
F14	3Δ/4	239.37
F15	ECR 0+56.27 (18.08' RT)*	239.26

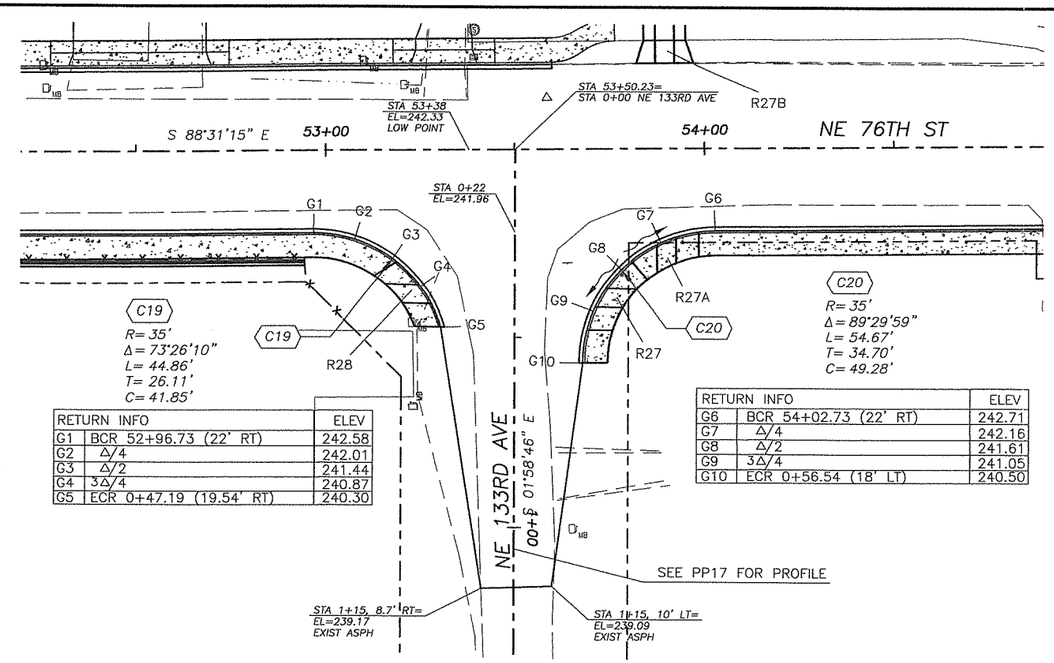

RETURN INFO		ELEV
G1	BCR 52+96.73 (22' RT)	242.58
G2	Δ/4	242.01
G3	Δ/2	241.44
G4	3Δ/4	240.87
G5	ECR 0+47.19 (19.54' RT)	240.30

RETURN INFO		ELEV
G6	BCR 54+02.73 (22' RT)	242.71
G7	Δ/4	242.16
G8	Δ/2	241.61
G9	3Δ/4	241.05
G10	ECR 0+56.54 (18' LT)	240.50

SCALE IN FEET

20 0 20 40

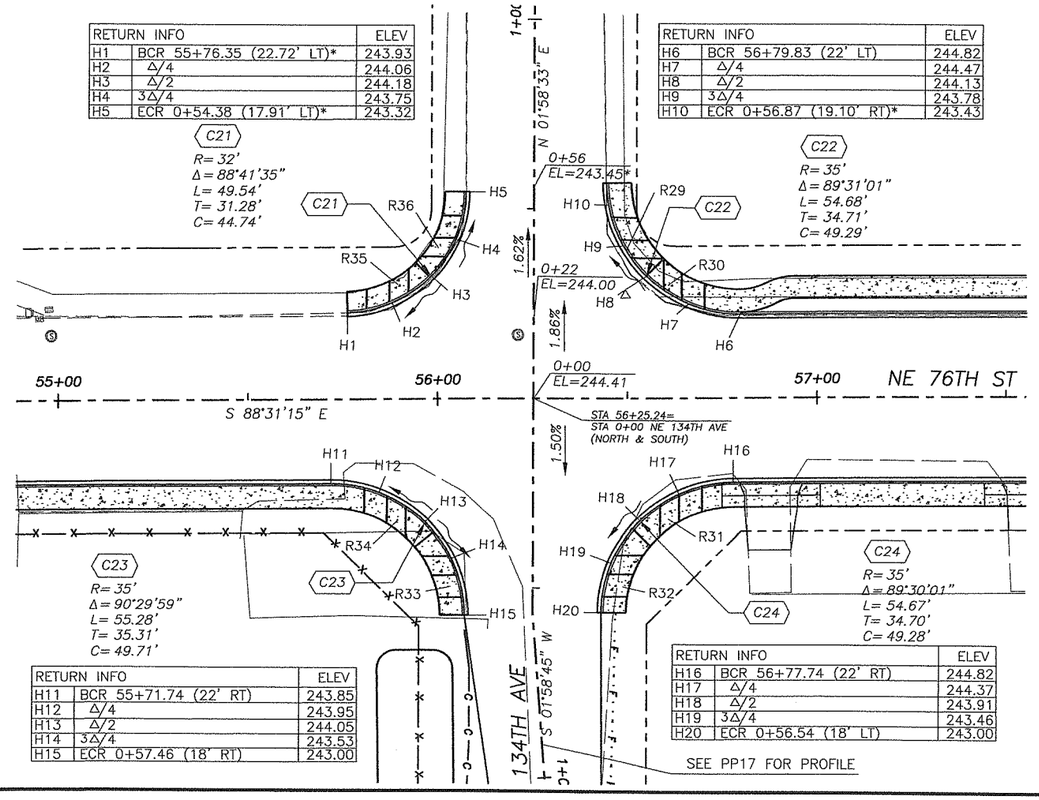

RETURN INFO		ELEV
H1	BCR 55+76.35 (22.72' LT)*	243.93
H2	Δ/4	244.06
H3	Δ/2	244.18
H4	3Δ/4	243.75
H5	ECR 0+54.38 (17.91' LT)*	243.32

RETURN INFO		ELEV
H6	BCR 56+79.83 (22' LT)	244.82
H7	Δ/4	244.47
H8	Δ/2	244.13
H9	3Δ/4	243.78
H10	ECR 0+56.87 (19.10' RT)*	243.43

RETURN INFO		ELEV
H11	BCR 55+71.74 (22' RT)	243.85
H12	Δ/4	243.95
H13	Δ/2	244.05
H14	3Δ/4	243.53
H15	ECR 0+57.46 (18' RT)	243.00

RETURN INFO		ELEV
H16	BCR 56+77.74 (22' RT)	244.82
H17	Δ/4	244.37
H18	Δ/2	243.91
H19	3Δ/4	243.46
H20	ECR 0+56.54 (18' LT)	243.00

CL OF RAMPS @ FACE

#	STATION	OFFSET	TYPE
R25	0+39.9	22.2 LT	F1
R25A	47+84.0	26.2 RT	F1
R26	0+40.4	22.5 RT	F2
R26A	47+85.6	26.5 LT	F2
R26B	0+38.7	22.8 RT	F2
R26C	47+13.8	26.4 RT	F2
R27	0+39.5	22.4 LT	F2
R27A	53+90	22.8 LT	F2
R27B	53+90	24.4 RT	F4
R28	0+38.4	23.6 RT	F2
R29	0+38.8	22.5 RT	F2
R30	56+61.2	25.1 LT	F2
R31	56+61.2	26.2 RT	F2
R32	0+49.5	20.5 LT	F2
R33	0+44.2	20.6 RT	F2
R34	55+89.2	26.7 RT	F2
R35	55+90.1	26.7 LT	F2
R36	0+39.4	22.2 LT	F2

* MATCH EXISTING

*NOTE:
ALL CENTERLINE ELEVATIONS ARE TOP OF ASPHALT.
ALL CURB ELEVATIONS ARE TOP FACE OF CURB (TFC)

DESIGNED	BAK
DRAWN	BAK
CRP	311022
HOR.	1"=20'
VERT.	1"=5'
DATE	1/16/04
DWG:	103
SHEET 63	OF 93

CALL 48 HOURS BEFORE YOU DIG 1-800-553-4344 "It's the Law" NORTHWEST UTILITIES NOTIFICATION CENTER

STATE OF WASHINGTON JAMES A. KLUG 31858 REGISTERED PROFESSIONAL ENGINEER EXPIRES APRIL 7, 2004

2-17-04

DESIGN & ENGINEERING DIVISION
DESIGN SECTION

NE 76TH ST (SR-503 TO NE 147TH AVE)
INTERSECTION PLAN

proud past, promising future
CLARK COUNTY WASHINGTON

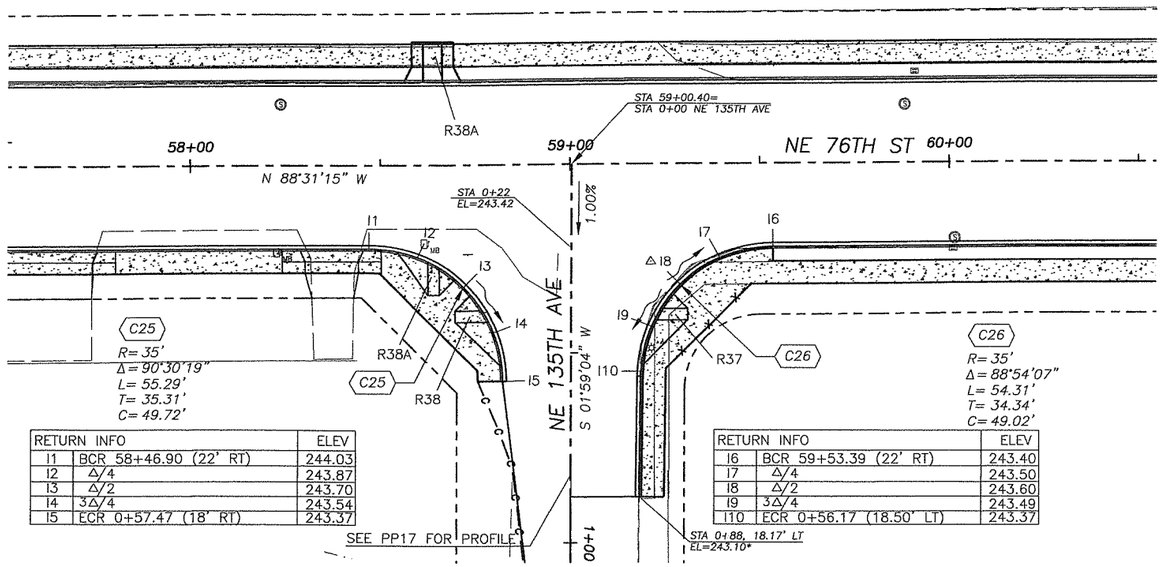

C25
R= 35'
Δ= 90°30'19"
L= 55.29'
T= 35.31'
C= 49.72'

RETURN INFO		ELEV
I1	BCR 58+46.90 (22' RT)	244.03
I2	Δ/4	243.87
I3	Δ/2	243.70
I4	3Δ/4	243.54
I5	ECR 0+57.47 (18' RT)	243.37

C26
R= 35'
Δ= 88°54'07"
L= 54.31'
T= 34.34'
C= 49.02'

RETURN INFO		ELEV
I6	BCR 59+53.39 (22' RT)	243.40
I7	Δ/4	243.50
I8	Δ/2	243.60
I9	3Δ/4	243.49
I10	ECR 0+56.17 (18.50' LT)	243.37

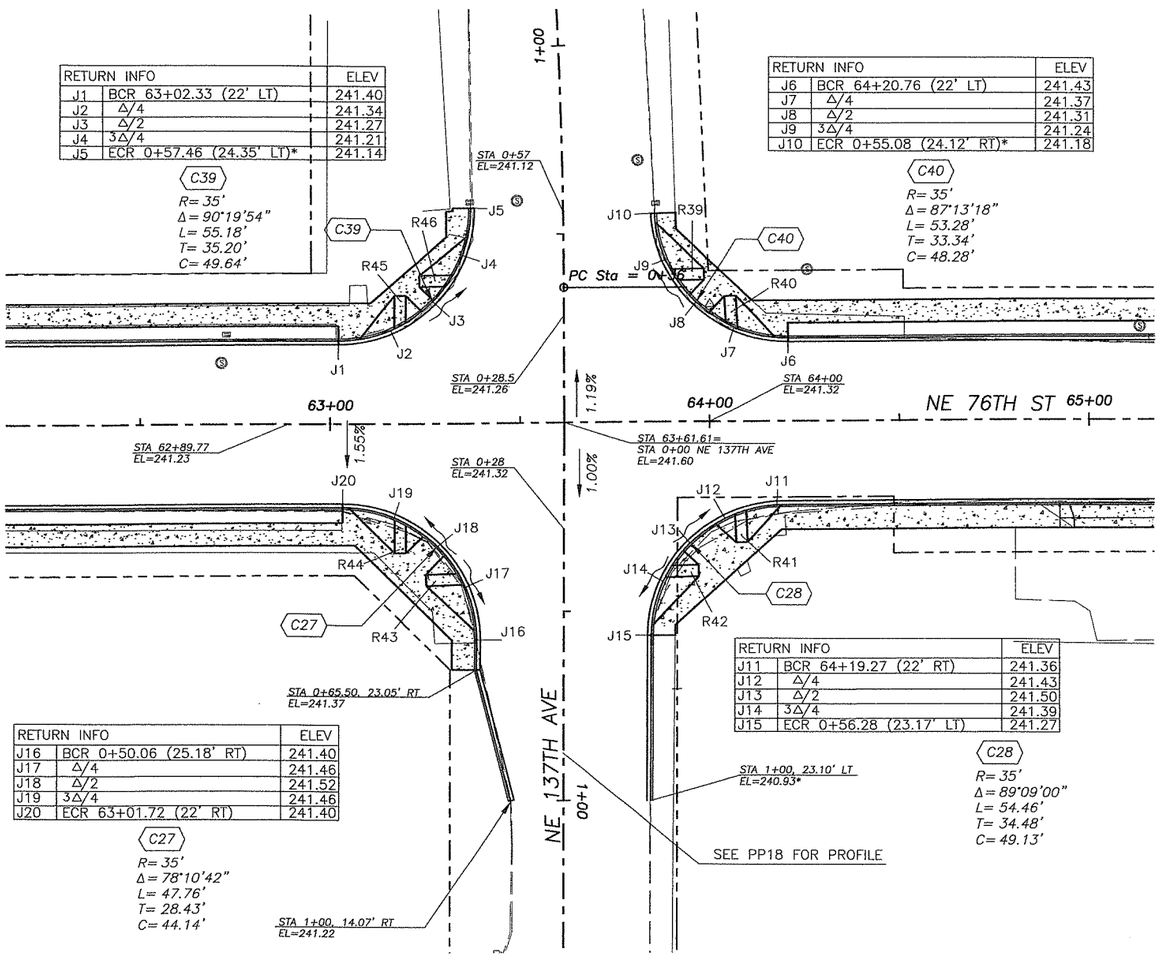

RETURN INFO		ELEV
J1	BCR 63+02.33 (22' LT)	241.40
J2	Δ/4	241.34
J3	Δ/2	241.27
J4	3Δ/4	241.21
J5	ECR 0+57.46 (24.35' LT)*	241.14

C39
R= 35'
Δ= 90°19'54"
L= 55.18'
T= 35.20'
C= 49.64'

RETURN INFO		ELEV
J6	BCR 64+20.76 (22' LT)	241.43
J7	Δ/4	241.37
J8	Δ/2	241.31
J9	3Δ/4	241.24
J10	ECR 0+55.08 (24.12' RT)*	241.18

C40
R= 35'
Δ= 87°13'18"
L= 53.28'
T= 33.34'
C= 48.28'

RETURN INFO		ELEV
J16	BCR 0+50.06 (25.18' RT)	241.40
J17	Δ/4	241.46
J18	Δ/2	241.52
J19	3Δ/4	241.46
J20	ECR 63+01.72 (22' RT)	241.40

C27
R= 35'
Δ= 78°10'42"
L= 47.76'
T= 28.43'
C= 44.14'

RETURN INFO		ELEV
J11	BCR 64+19.27 (22' RT)	241.36
J12	Δ/4	241.43
J13	Δ/2	241.50
J14	3Δ/4	241.39
J15	ECR 0+56.28 (23.17' LT)	241.27

C28
R= 35'
Δ= 89°09'00"
L= 54.46'
T= 34.48'
C= 49.13'

CL OF RAMPS @ FACE			
#	STATION	OFFSET	TYPE
R37	0+43.1	21.2 LT	F1
R38	0+43.4	20.9 RT	F1
R38A	58+64.3	26.6 RT	F1
R38B	58+63.9	22 LT	F4
R39	0+39.0	29.1 RT	F1
R40	64+05.8	25.4 LT	F1
R41	64+08.0	23.9 RT	F1
R42	0+39.3	27.7 LT	F1
R43	0+41.3	28.4 RT	F1
R44	63+18.3	26.2 RT	F1
R45	63+18.6	26.0 RT	F1
R46	0+37.8	30.1 LT	F1
R47	0+39.2	21.9 RT	F2
R47A	76+57.9	25.8 LT	F2
R47B	76+60	22 RT	F3
R48	0+44.3	23.8 RT	F2
R48A	75+86.5	26.5 LT	F2
R48B	75+86.5	22 RT	F3

* MATCH EXISTING

*NOTE:
ALL CENTERLINE ELEVATIONS ARE TOP OF ASPHALT.
ALL CURB ELEVATIONS ARE TOP FACE OF CURB (TFC)

SCALE IN FEET
20 0 20 40

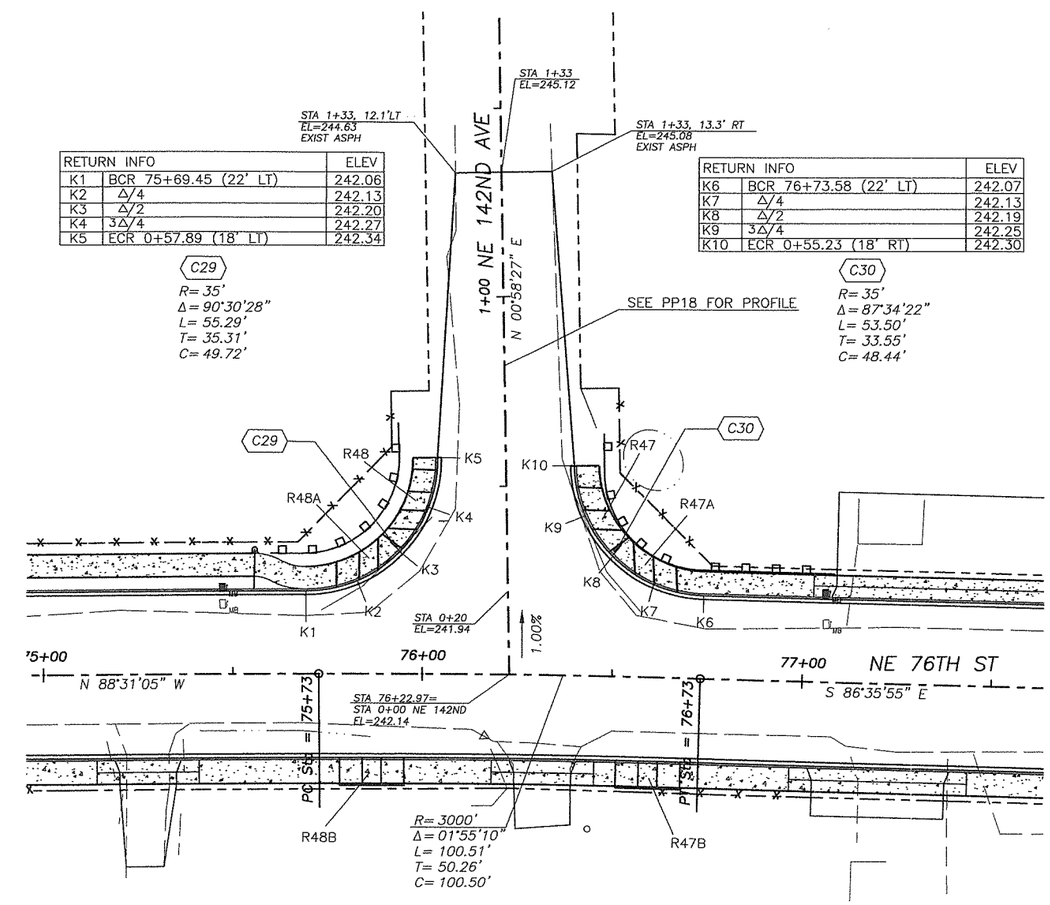

RETURN INFO		ELEV
K1	BCR 75+69.45 (22' LT)	242.06
K2	Δ/4	242.13
K3	Δ/2	242.20
K4	3Δ/4	242.27
K5	ECR 0+57.89 (18' LT)	242.34

C29
R= 35'
Δ= 90°30'28"
L= 55.29'
T= 35.31'
C= 49.72'

RETURN INFO		ELEV
K6	BCR 76+73.58 (22' LT)	242.07
K7	Δ/4	242.13
K8	Δ/2	242.19
K9	3Δ/4	242.25
K10	ECR 0+55.23 (18' RT)	242.30

C30
R= 35'
Δ= 87°34'22"
L= 53.50'
T= 33.55'
C= 48.44'

DESIGNED	BAK
DRAWN	BAK
CRP	311022
HOR.	1"=20'
VERT.	1"=5'
DATE	1/16/04
DWG:	104
SHEET 64	OF 93

CALL 48 HOURS BEFORE YOU DIG
1-800-553-4344
"It's the Law"
NORTHWEST UTILITIES NOTIFICATION CENTER

STATE OF WASHINGTON
BRUCE A. ELLIS
39868
REGISTERED PROFESSIONAL ENGINEER
EXPIRES APRIL 7, 2004
2-17-04

DESIGN & ENGINEERING DIVISION
DESIGN SECTION

NE 76TH ST (SR-503 TO NE 147TH AVE)
INTERSECTION PLAN

proud past, promising future
CLARK COUNTY
WASHINGTON

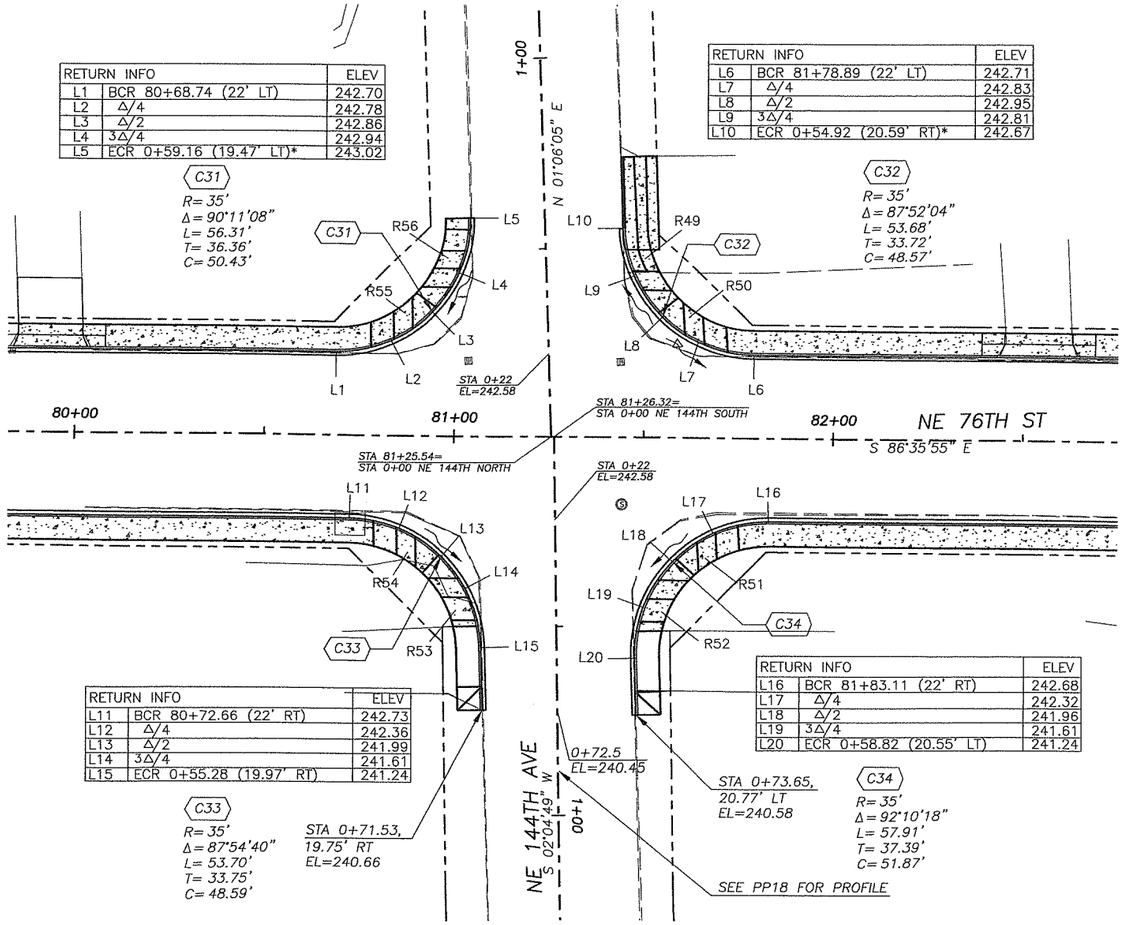

RETURN INFO		ELEV
L1	BCR 80+68.74 (22' LT)	242.70
L2	Δ/4	242.78
L3	Δ/2	242.86
L4	3Δ/4	242.94
L5	ECR 0+59.16 (19.47' LT)*	243.02

C31
R= 35'
Δ= 90°11'08"
L= 56.31'
T= 36.36'
C= 50.43'

RETURN INFO		ELEV
L6	BCR 81+78.89 (22' LT)	242.71
L7	Δ/4	242.83
L8	Δ/2	242.95
L9	3Δ/4	242.81
L10	ECR 0+54.92 (20.59' RT)*	242.67

C32
R= 35'
Δ= 87°52'04"
L= 53.68'
T= 33.72'
C= 48.57'

RETURN INFO		ELEV
L11	BCR 80+72.66 (22' RT)	242.73
L12	Δ/4	242.36
L13	Δ/2	241.99
L14	3Δ/4	241.61
L15	ECR 0+55.28 (19.97' RT)	241.24

C33
R= 35'
Δ= 87°54'40"
L= 53.70'
T= 33.75'
C= 48.59'

RETURN INFO		ELEV
L16	BCR 81+83.11 (22' RT)	242.68
L17	Δ/4	242.32
L18	Δ/2	241.96
L19	3Δ/4	241.61
L20	ECR 0+58.82 (20.55' LT)	241.24

C34
R= 35'
Δ= 92°10'18"
L= 57.91'
T= 37.39'
C= 51.87'

SCALE IN FEET

20 0 20 40

CL OF RAMPS @ FACE			
#	STATION	OFFSET	TYPE
R49	0+40.3	25.7 LT	F2
R50	81+63.2	24.6 LT	F2
R51	81+66.7	25.9 RT	F2
R52	0+40.6	25.2 LT	F2
R53	0+39.4	24.0 RT	F2
R54	80+87.5	25.3 RT	F2
R55	80+86.3	26.7 LT	F2
R56	0+43.0	23.5 LT	F2
R57	0+33.6	21.0 RT	F2
R58	88+53.1	23.1 LT	F2
R59	88+56.8	23.8 RT	F2
R60	0+36.6	21.7 LT	F2
R61	0+35.6	21.4 RT	F2
R62	87+88.4	23.1 RT	F2
R63	87+84.6	24.4 LT	F2
R64	0+39.6	22.3 LT	F2

* MATCH EXISTING

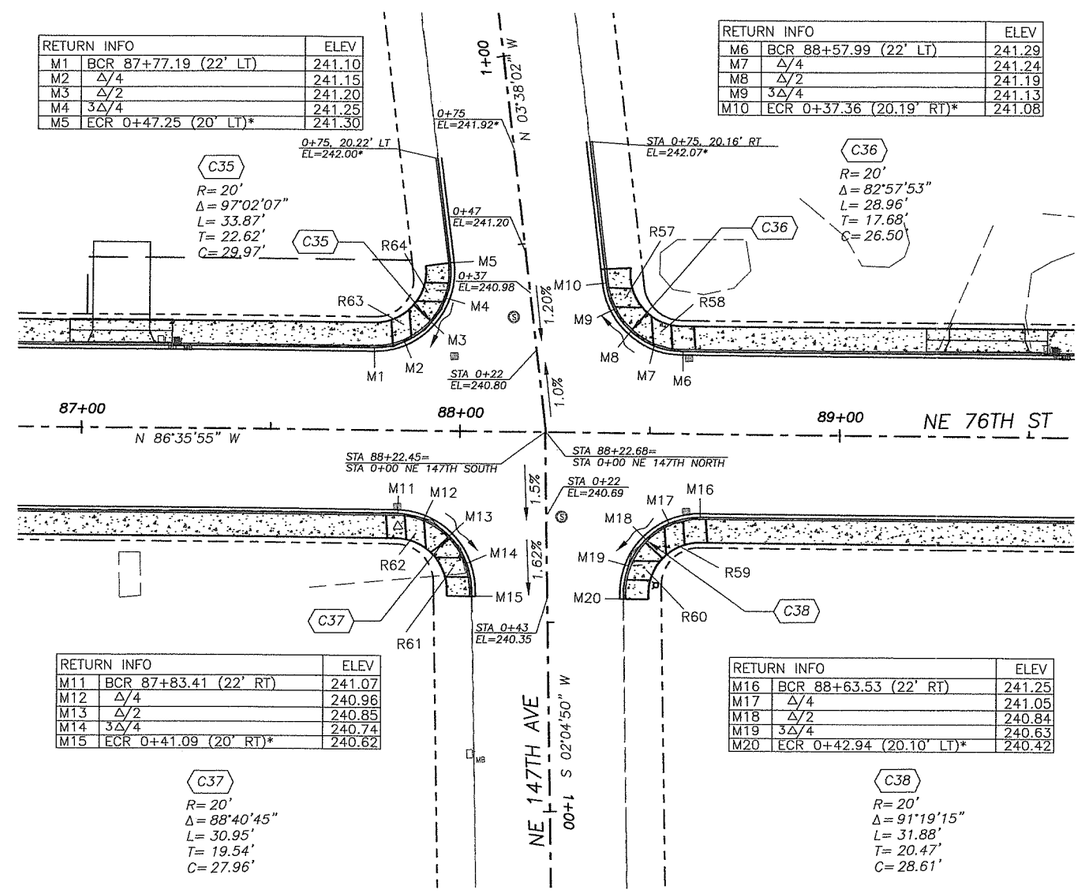

RETURN INFO		ELEV
M1	BCR 87+77.19 (22' LT)	241.10
M2	Δ/4	241.15
M3	Δ/2	241.20
M4	3Δ/4	241.25
M5	ECR 0+47.25 (20' LT)*	241.30

C35
R= 20'
Δ= 97°02'07"
L= 33.87'
T= 22.62'
C= 29.97'

RETURN INFO		ELEV
M6	BCR 88+57.99 (22' RT)	241.29
M7	Δ/4	241.24
M8	Δ/2	241.19
M9	3Δ/4	241.13
M10	ECR 0+37.36 (20.19' RT)*	241.08

C36
R= 20'
Δ= 82°57'53"
L= 28.96'
T= 17.68'
C= 26.50'

RETURN INFO		ELEV
M11	BCR 87+83.41 (22' RT)	241.07
M12	Δ/4	240.96
M13	Δ/2	240.85
M14	3Δ/4	240.74
M15	ECR 0+41.09 (20' RT)*	240.62

C37
R= 20'
Δ= 88°40'45"
L= 30.95'
T= 19.54'
C= 27.96'

RETURN INFO		ELEV
M16	BCR 88+63.53 (22' RT)	241.25
M17	Δ/4	241.05
M18	Δ/2	240.84
M19	3Δ/4	240.63
M20	ECR 0+42.94 (20.10' LT)*	240.42

C38
R= 20'
Δ= 91°19'15"
L= 31.88'
T= 20.47'
C= 28.61'

*NOTE:
ALL CENTERLINE ELEVATIONS ARE TOP OF ASPHALT.
ALL CURB ELEVATIONS ARE TOP FACE OF CURB (TFC)

DESIGNED	BAK
DRAWN	BAK
CRP	311022
HOR.	1"=20'
VERT.	1"=5'
DATE	1/16/04
DWG:	105
SHEET 65	OF 93

CALL 48 HOURS BEFORE YOU DIG 1-800-553-4344 "It's the Law" NORTHWEST UTILITIES NOTIFICATION CENTER

DESIGN & ENGINEERING DIVISION
DESIGN SECTION

NE 76TH ST (SR-503 TO NE 147TH AVE)
INTERSECTION PLAN

proud past, promising future
CLARK COUNTY WASHINGTON

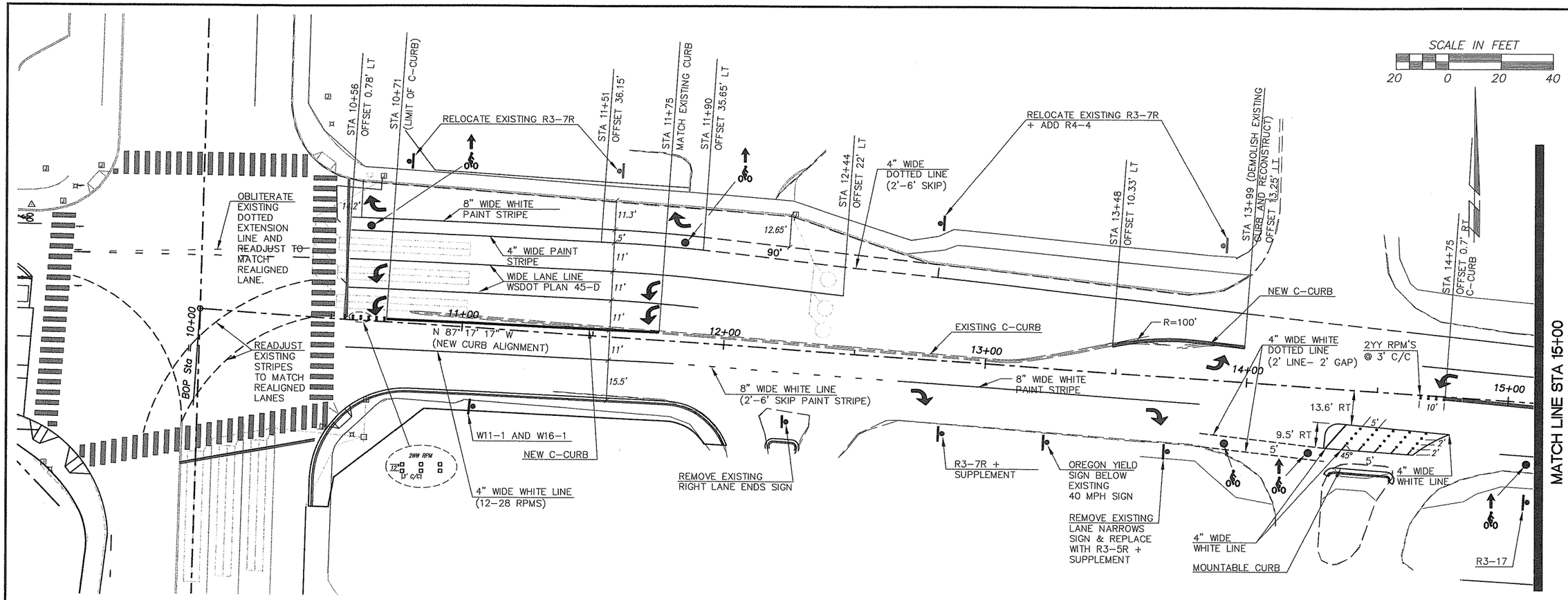

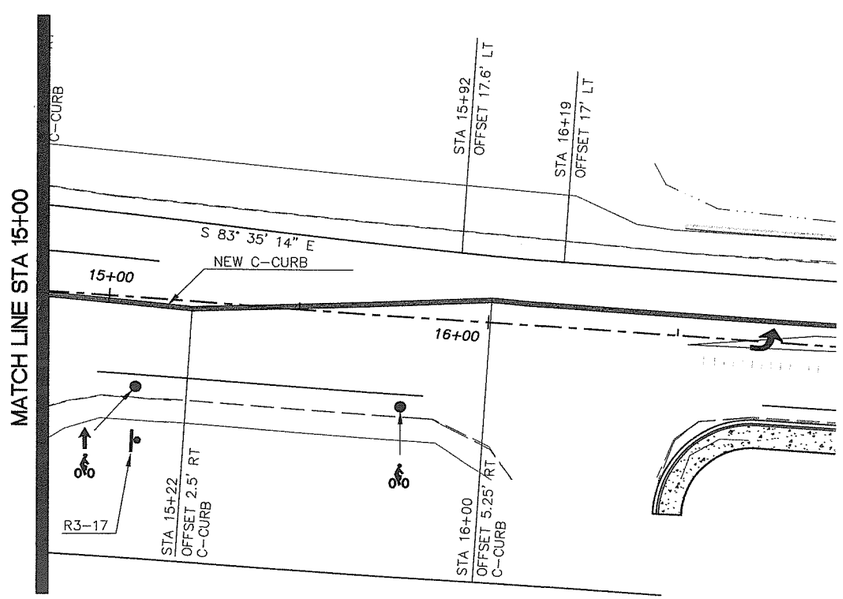

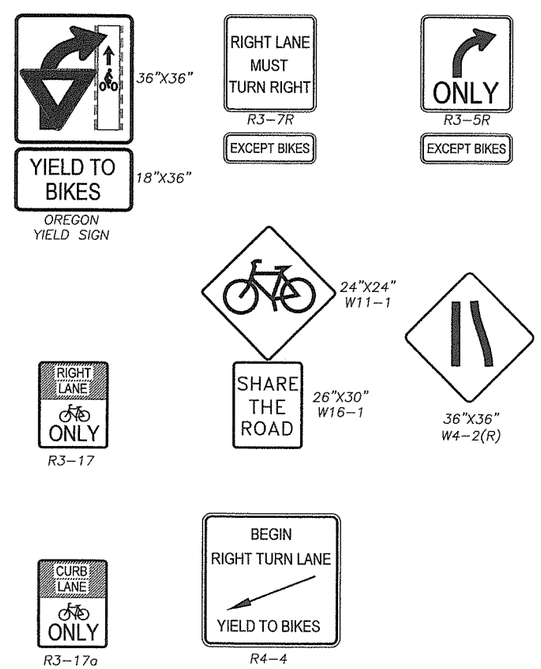

SIGNING & STRIPING RESPONSIBILITIES:

The striping and pavement marking removal process shall conform to 2002 WSDOT "Standard Specifications for Road, Bridge and Municipal Construction" section 8-22.3(6). The County's accepted practice of removal of existing painted pavement marking is by shot blasting. Painted pavement markings shall be removed by the contractor. All other markings (e.g. thermoplastic crosswalks and turn arrows) shall be removed by grinding by County forces. The contractor shall have a written approval by the engineer for any other method of removal.

The contractor shall maintain existing permanent signing in accordance with 2002 WSDOT "Standard Specifications for Road, Bridge and Municipal Construction" section 1-07.23(1).

The contractor shall provide temporary pavement markings in accordance with 2002 WSDOT "Standard Specifications for Road, Bridge and Municipal Construction" sections 1-07.23 and 8-23.

All new signing, striping and pavement markings, including relocation of existing signs to the final location, as well as removal of non-painted pavement markings by grinding will be performed by Clark County Public Works and reimbursed by the applicant for the services rendered.

Except for the STOP bar and pedestrian crosswalk, all existing signing & striping on NE 76th Street between NE 120th Ave and SR-503 shall be obliterated and replaced by new signing and striping as shown in the plan.

DESIGNED	EK
DRAWN	KB
CRP	311022
HOR.	1"=20'
VERT.	NA
DATE	1/16/04
DWG:	SS1
SHEET 66	OF 93

CALL 48 HOURS BEFORE YOU DIG 1-800-553-4344 "It's the Law" NORTHWEST UTILITIES NOTIFICATION CENTER

STEVE ZAYAS KHAN WASHINGTON REGISTERED PROFESSIONAL ENGINEER 22 DESIGNED REGISTERED EXPIRES: MM DD YYYY 02-9-04

DESIGN & ENGINEERING DIVISION
DESIGN SECTION

NE 76TH ST (SR-503 TO NE 147TH AVE)
SIGNING & STRIPING PLAN

proud past, promising future
CLARK COUNTY WASHINGTON

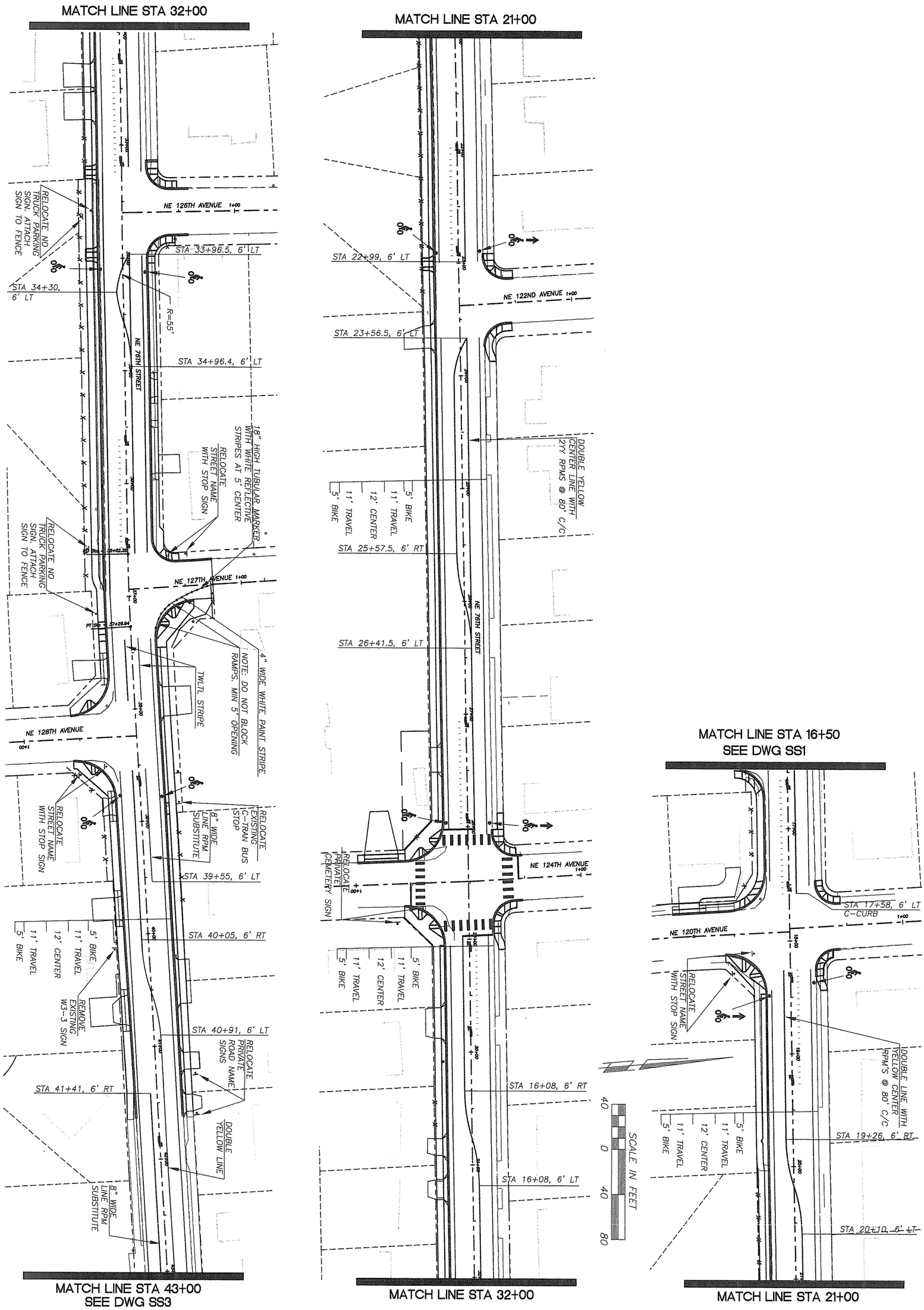

proud past, promising future

CLARK COUNTY
WASHINGTON

DESIGN & ENGINEERING DIVISION
DESIGN SECTION

NE 76TH ST (SR-503 TO NE 147TH AVE)
SIGNING & STRIPING PLAN

EJAZ KHAN
STATE OF WASHINGTON
35938
REGISTERED PROFESSIONAL ENGINEER
EXPIRES: JAN. 01, 2006
02-19-04

CALL 48 HOURS BEFORE YOU DIG
1-800-553-4344
"It's the Law"
NORTHWEST UTILITIES NOTIFICATION CENTER

DESIGNED	BAK
DRAWN	BAK
CRP	311022
HOR.	1"=40'
VERT.	NA
DATE	1/16/04
DWG:	SS2
SHEET 67	OF 93

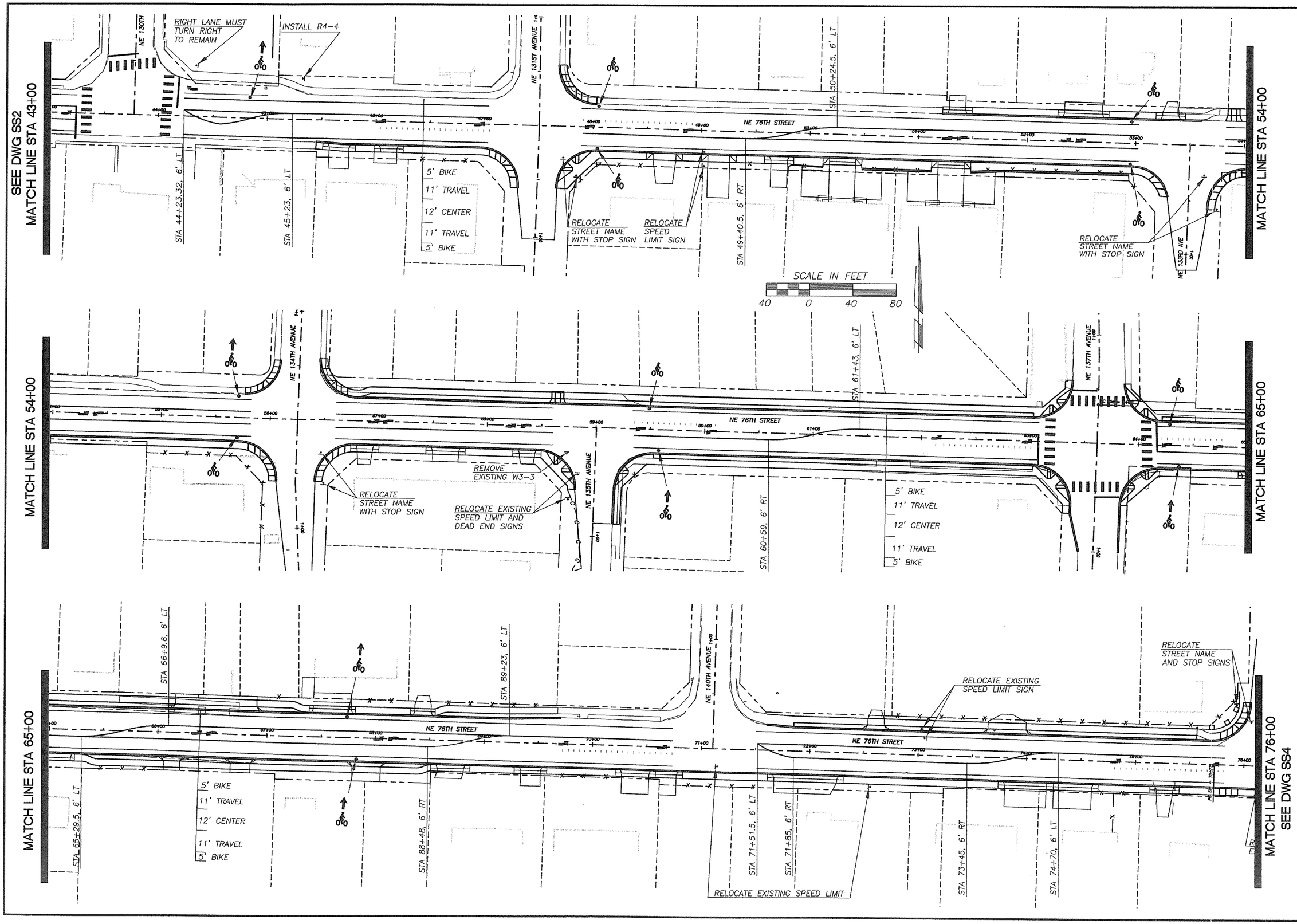

DESIGNED	BAK
DRAWN	BAK
CRP	311022
HOR.	1"=40'
VERT.	NA
DATE	1/16/04
DWG:	SS3
SHEET 68	OF 93

CALL 48 HOURS BEFORE YOU DIG 1-800-553-4344 "It's the Law" NORTHWEST UTILITIES NOTIFICATION CENTER

STATE OF WASHINGTON BRENT E. KEHAN 20583 REGISTERED PROFESSIONAL ENGINEER
EXPIRES JAN. 31, 2006
02-19-04

DESIGN & ENGINEERING DIVISION
DESIGN SECTION

NE 76TH ST (SR-503 TO NE 147TH AVE)
SIGNING & STRIPING PLAN

proud past, promising future
CLARK COUNTY WASHINGTON

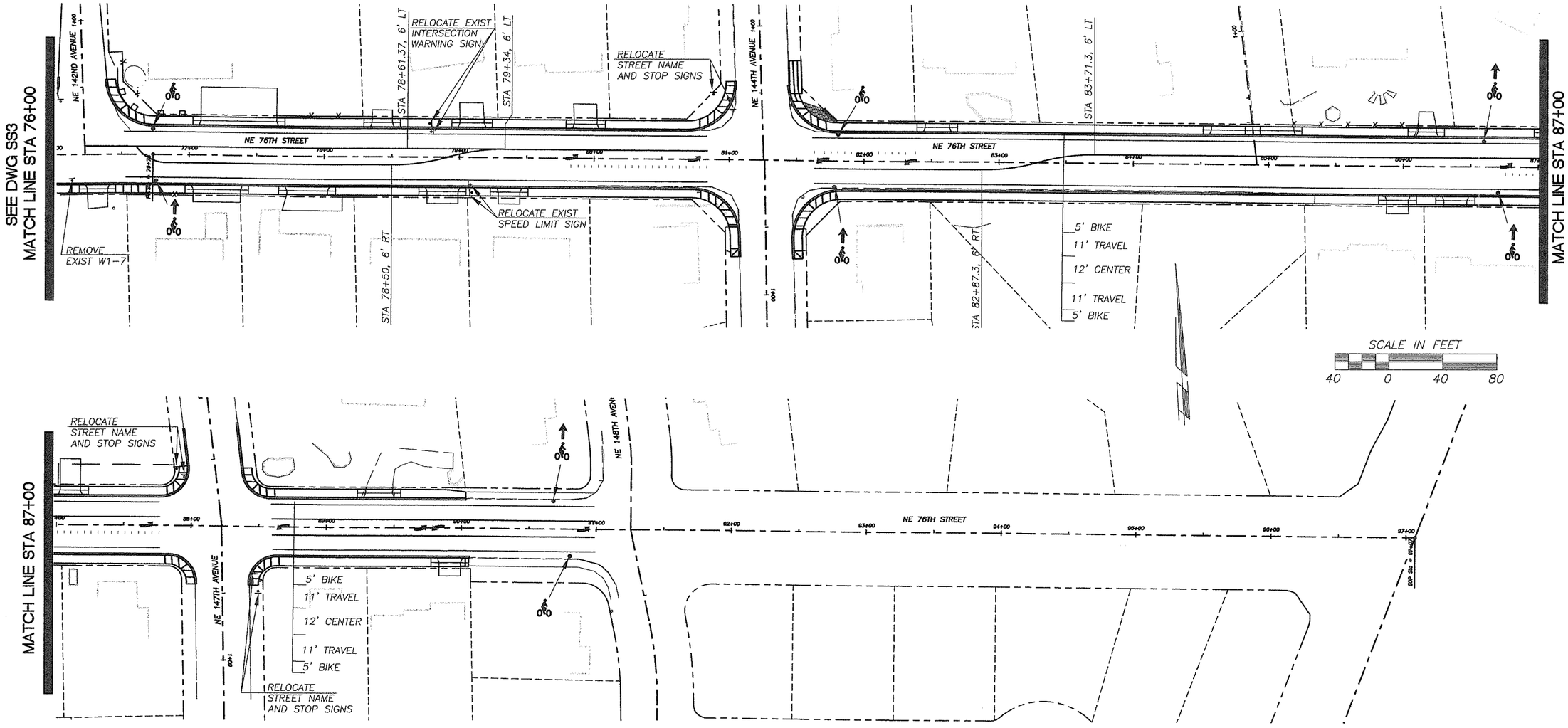

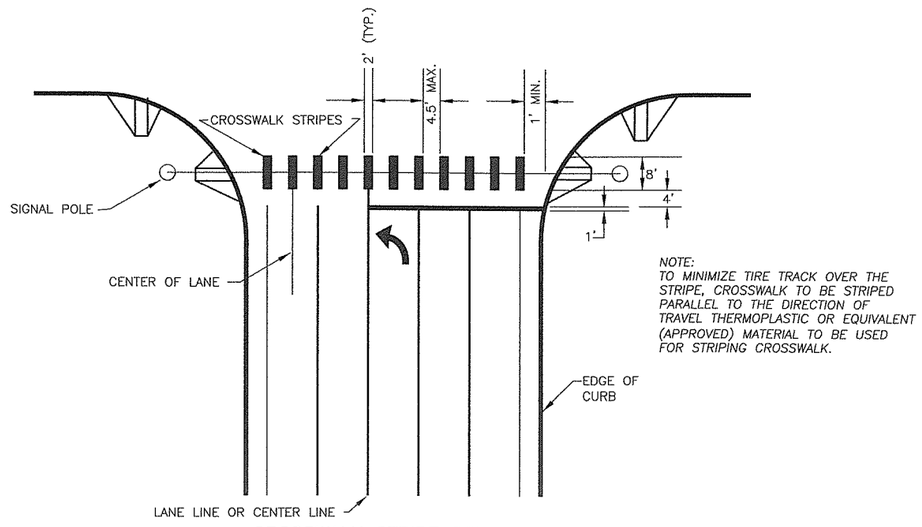

NOTE:
TO MINIMIZE TIRE TRACK OVER THE STRIPE, CROSSWALK TO BE STRIPED PARALLEL TO THE DIRECTION OF TRAVEL THERMOPLASTIC OR EQUIVALENT (APPROVED) MATERIAL TO BE USED FOR STRIPING CROSSWALK.

CROSSWALK STRIPE DETAILS

DESIGNED	BAK
DRAWN	BAK
CRP	311022
HOR.	1"=40'
VERT.	NA
DATE	1/16/04
DWG:	SS4
SHEET 69	OF 93

CALL 48 HOURS BEFORE YOU DIG 1-800-553-4344 "It's the Law" NORTHWEST UTILITIES NOTIFICATION CENTER

STATE OF WASHINGTON BRIAN A. SCHAGUNN 35928 REGISTERED PROFESSIONAL ENGINEER
EXPIRES: JAN. 01, 2006
02-19-04

DESIGN & ENGINEERING DIVISION
DESIGN SECTION

NE 76TH ST (SR-503 TO NE 147TH AVE)
SIGNING & STRIPING PLAN

proud past, promising future
CLARK COUNTY WASHINGTON

T. 2 N., R. 2 E., W. M.

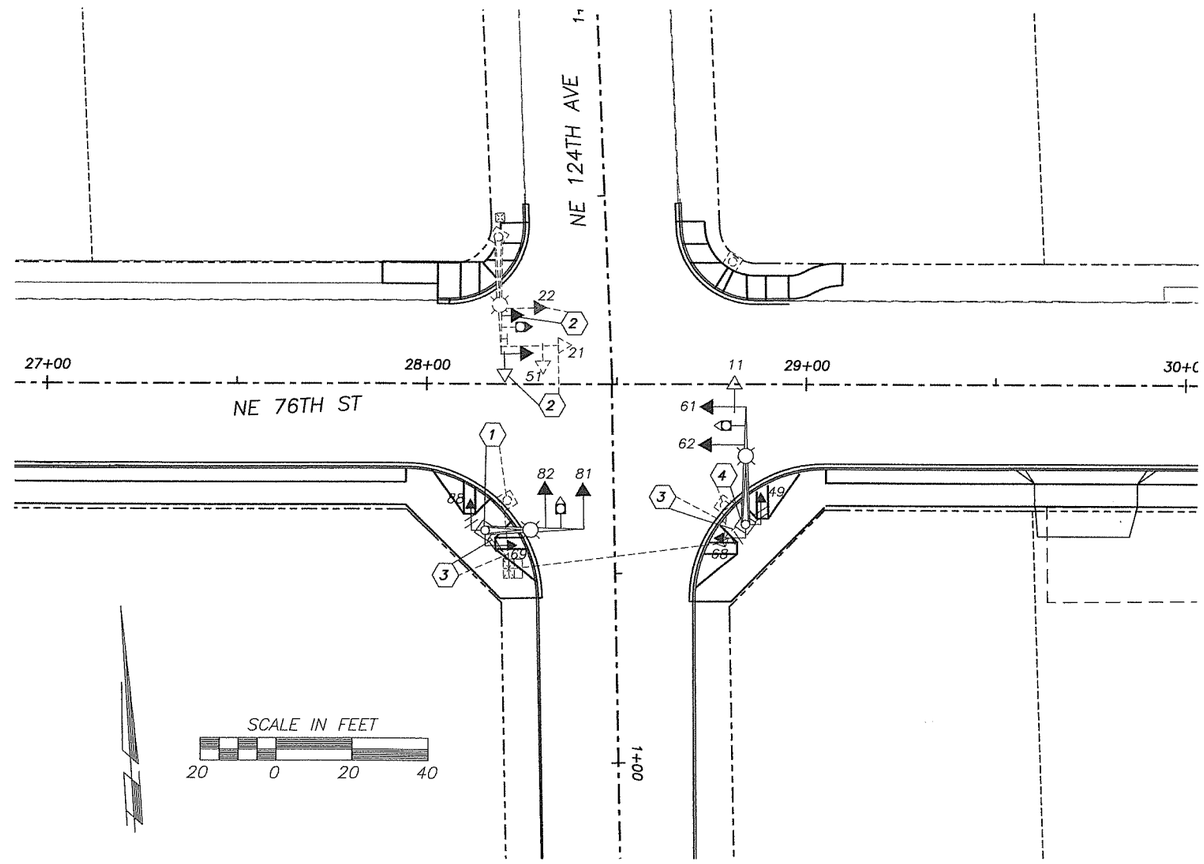

LEGEND

- Type III signal standard with terminal cabinet
- P-1 controller cabinet with Type I electrical service
- Type I electrical junction box
- optically programmed traffic signal display sections
- conventional traffic signal display sections
- pedestrian signal display
- optical preemption detector
- rigid metal conduit
- rigid polyvinyl chloride PVC) conduit
- existing right-of-way
- (7) construction note

CONSTRUCTION NOTES

(1) Relocate existing traffic signal standard (1) from its existing location at approximate Sta. NE 124TH AVENUE SOUTH 0+30 (28' Rt.) to a new foundation to be located at approximate Sta. NE 124TH AVENUE SOUTH 0+38 (34' Rt.). The existing signal pole foundation shall be removed and the hole filled with suitable compacted fill material or the existing signal pole foundation shall be demolished to a depth of not less than 18 inches below the adjacent roadway elevation. Both pedestrian push buttons are to be relocated on the opposite side of the signal pole (180 degrees) from their current location(s). Each extruded "H" section for each push button shall be replaced with a new "H" section having the same legend, but with an arrow that points in the opposite direction (towards the pole). The holes in the signal pole where the existing pushbuttons were mounted shall be tapped to the nearest pipe thread size and plugged with stainless steel pipe plugs having a recessed allen wrench (socket) drive.

(2) At the existing location (approximate Sta. NE 76TH STREET 28+19 [39' Lt.]) revise traffic signal standard (2) by relocating traffic signal head number 21/51 to the existing capped tenon on the end of the mast arm, relocating the existing mast arm mounted regulatory sign to a location that is one foot from the right edge of relocated traffic signal head number 21/51, and relocating traffic signal head number 22 to the existing tenon that is two feet further from the pole upright than the tenon it is currently mounted on. The previously used tenons shall be capped, however, the tenon that is near the end of the mast arm will need to be cut-off prior to capping in order to properly mount the relocated regulatory sign in front of it.

(3) Redirect and/or extend existing electrical conduit run and conductors from controller cabinet, or existing junction box, to the new traffic signal foundation location as directed by the Engineer. Refer to the existing traffic signal plan sheet in these plans for information regarding the conduit/wiring schedule for these runs. The existing Type I electrical junction box is to be adjusted to the grade of the sidewalk/curb ramp.

(4) Relocate existing traffic signal standard (4) from its existing location at approximate Sta. NE 76TH STREET 28+78.5 (32' Rt.) to a new foundation to be located at approximate Sta. NE 76TH STREET 28+84 (37' Rt.). The existing signal pole foundation shall be removed and the hole filled with suitable compacted fill material or the existing signal pole foundation shall be demolished to a depth of not less than 18 inches below the adjacent roadway elevation. Both pedestrian push buttons are to be relocated on the opposite side of the signal pole (180 degrees) from their current location(s). Each extruded "H" section for each push button shall be replaced with a new "H" section having the same legend, but with an arrow that points in the opposite direction (towards the pole). The holes in the signal pole where the existing pushbuttons were mounted shall be tapped to the nearest pipe thread size and plugged with stainless steel pipe plugs having a recessed allen wrench (socket) drive.

76SIG2PLAN

DESIGNED	EB
DRAWN	KB
CRP	311022
HOR.	1"=20'
VERT.	NA
DATE	1/16/04
DWG:	TRS1
SHEET 70	OF 93

CALL 48 HOURS BEFORE YOU DIG
1-800-553-4344
"It's the Law"
NORTHWEST UTILITIES NOTIFICATION CENTER

STATE OF WASHINGTON
EUGENE S. BERRETT
PROFESSIONAL ENGINEER
EXPIRES JULY 17, 2005

DESIGN & ENGINEERING DIVISION
DESIGN SECTION

NE 76th ST. @ NE 124th AVE. SIGNAL
TRAFFIC SIGNAL MODIFICATION

proud past, promising future
CLARK COUNTY
WASHINGTON

CONSTRUCTION NOTES

1. At approximate Sta. NE 124TH AVENUE S. 0+32 (28' Rt.) install signal standard (1) complete with 25' mast arm with traffic signal heads 81 and 82, optical preemption detector, mast arm mounted street name sign, photoelectric cell illumination circuit control, pedestrian signal heads 69 and 88, terminal cabinet with 30 amp test switch for illumination system, and two pedestrian pushbutton assemblies. Illumination consists of a 10' mast arm with a 250 watt HPS lamp in a flat glass refractor luminaire having a Type III medium cut-off light distribution.
2. At approximate Sta. NE 76TH STREET 18+19 (37' Lt.) install signal standard (2) complete with 30' mast arm with traffic signal heads 21/51 and 22, optical preemption detector, mast arm mounted regulatory and street name signs, pedestrian signal heads 28 and 89, terminal cabinet, and two pedestrian pushbutton assemblies. Illumination consists of a 16' mast arm with a 250 watt HPS lamp in a flat glass refractor luminaire having a Type III medium cut-off light distribution.
3. At approximate Sta. NE 124TH AVENUE N. 0+29 (33' Rt.) install signal standard (3) complete with 30' mast arm with traffic signal heads 41 and 42, optical preemption detector, mast arm mounted street name sign, pedestrian signal heads 29 and 48, terminal cabinet, and two pedestrian pushbutton assemblies. Illumination consists of a 16' mast arm with a 250 watt HPS lamp in a flat glass refractor luminaire having a Type III medium cut-off light distribution.
4. At approximate Sta. NE 76TH STREET 18+79 (34' Rt.) install signal standard (4) complete with 30' mast arm with traffic signal heads 11/61 and 62, optical preemption detector, mast arm mounted regulatory and street name signs, pedestrian signal heads 49 and 68, terminal cabinet, and two pedestrian pushbutton assemblies. Illumination consists of a 16' mast arm with a 250 watt HPS lamp in a flat glass refractor luminaire having a Type III medium cut-off light distribution.
5. At approximate Sta. NE 124TH AVENUE S. 0+50 (28' Rt.) install P-1 controller cabinet (with attached Type I electrical service) on modified M-pad foundation as per the standard plans, standard specifications, and the special provisions. The door for this cabinet shall open to the northeast, and the footing pad in front of the cabinet shall extend two (2) feet from the bottom of the pedestal and match the future sidewalk (3.5" above the top of the adjacent curb).
6. Run conduit and feeder wires into existing Clark Public Utilities 50 KVA transformer box (it will be necessary to make arrangements with Clark Public Utilities in order to install this run into their transformer box). Provide at least five (5) feet of slack wire inside transformer box for electrical hookup by Clark Public Utilities.
7. Avoid damage to existing loop detectors and lead-ins when installing conduit road crossing.
8. Install epoxy splice (cap) on the ends of the future vehicle detection cable terminated in this junction box.
9. Connect the traffic signal interconnect cable to the existing traffic signal interconnect cable in the existing junction box using an epoxy splice kit and soldering of wires as illustrated in the plans for connection between inductive loop detector lead-in wires and the home-run cable.

DETECTION SYSTEM NOTES

All vehicle detection inductive loops shall conform to the following:

INDUCTIVE LOOP(S)	TYPE OF LOOP	SIZE (W x L)	# OF TURNS	DISTANCE (NEAR-FAR) FROM STOP BAR ON THE APPROACH
23, 63	SQUARE	5' x 5'	4	270' TO 275'
44, 84	SQUARE	5' x 5'	4	209' TO 215
43, 83	RECTANGULAR	5' x 15'	4	-8' TO -23'
13, 53	RECTANGULAR	5' x 15'	3	46' TO 61'
22, 62	RECTANGULAR	5' x 25'	4	80' TO 105'
42, 82	RECTANGULAR	5' x 25'	4	-4' TO 21'
12, 52	RECTANGULAR COUPLED	(2.5'+ 2.5') X 15'	2 & 2	-8' TO -23'
41, 81	RECTANGULAR COUPLED	(2.5'+ 2.5') X 40'	2 & 2	-4' TO 36'
11/61, 21/51	RECTANGULAR COUPLED	(2.5'+ 2.5') X 65'	2 & 2	-4' TO 61'

All loops shall be centered in the detected lane, except vehicle loops adjacent to curbs shall be located to have 2.5' between the sawcut and the lane line to the left of the loop.

SIGNAL HEAD DISPLAYS

HEADS 11/61 and 21/51 — HEADS 22, 41, 42, 62, 81, and 82 — HEADS 28, 29, 48, 49, 68, 69, 88, and 89

NOTES:

1. The two arrow sections of heads 11/61 and 21/51 shall be optically programmed.
2. Traffic signal heads shall have 12" sections, square doors, backplates (except for heads 11/61 and 21/51 which do not require backplates), Type M mounts, and tunnel visors (except optically programmed sections, which have cadet visors). All conventional red and green sections shall be LED type.
3. Pedestrian signal heads are 16"(H) x 19½"(W) x 10½"(D) units having separated Light Emitting Diode (LED) HAND and incandescent or LED WALKER messages with Type E mounts, and Z-crate visors.

DETECTION RACK

MODULE NO. / MODULE TYPE / CHANNEL	1 PWR. SUPPLY	2 VEHICLE	3 VEHICLE	4 VEHICLE	5 VEHICLE	6 VEHICLE	7 VEHICLE	8A PREEMPT.
1	MODULES 2&3	21/51	22	11/61	41	81	SPARE	NORTH-BOUND CH A
2	MODULES 4&5	52	23	12	43	83	SPARE	SOUTH-BOUND CH B
3	MODULES 6&7	53	62	13	42	82	SPARE	EAST-BOUND CH C
4	SPARE	12	63	52	44	84	SPARE	WEST-BOUND CH D

(xx)=FUTURE SENSOR

common home-run cable (4cc/s)

T. 2 N., R. 2 E., W. M.

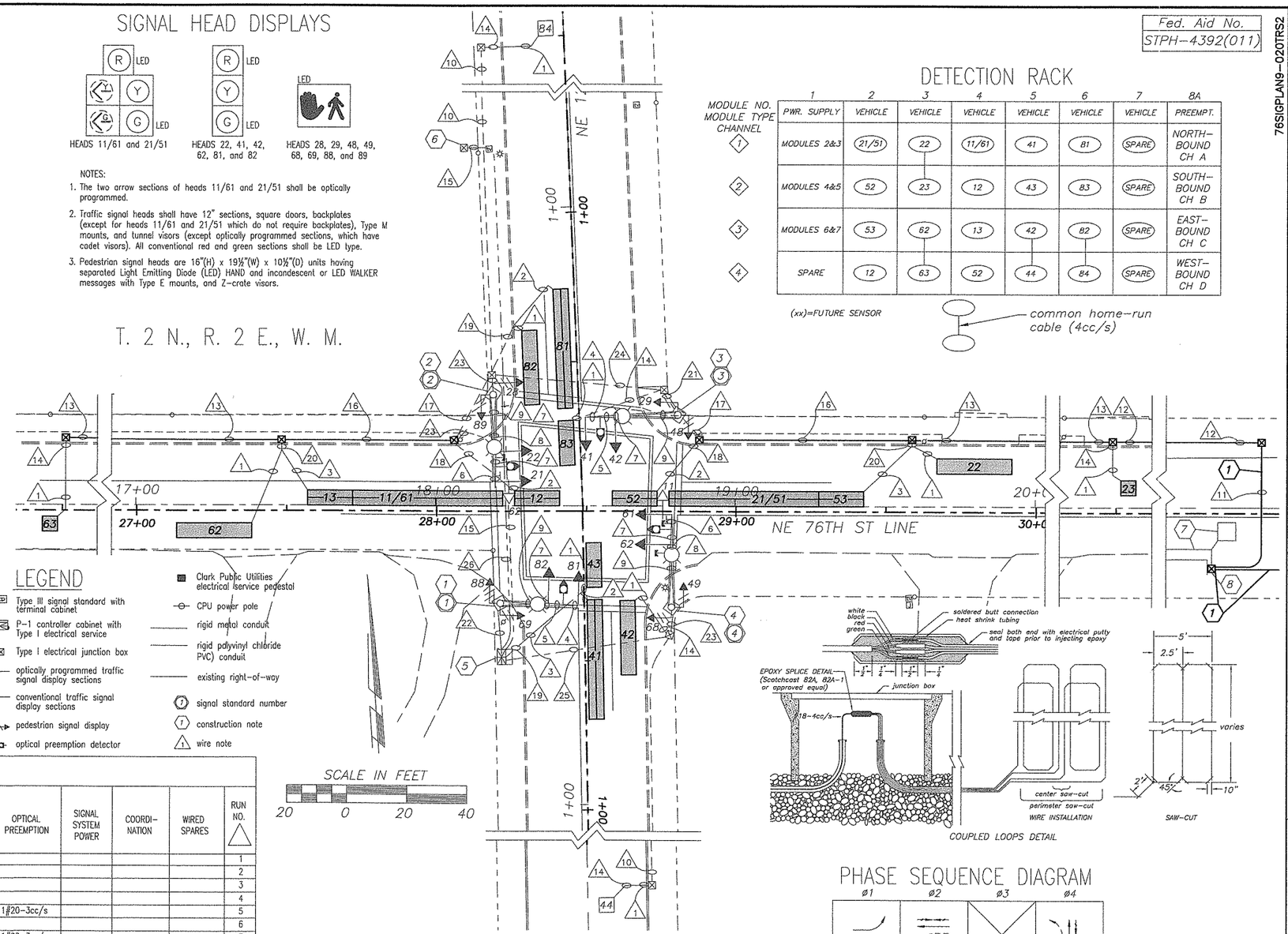

LEGEND

- Type III signal standard with terminal cabinet
- P-1 controller cabinet with Type I electrical service
- Type I electrical junction box
- optically programmed traffic signal display sections
- conventional traffic signal display sections
- pedestrian signal display
- optical preemption detector
- Clark Public Utilities electrical service pedestal
- CPU power pole
- rigid metal conduit
- rigid polyvinyl chloride (PVC) conduit
- existing right-of-way
- (7) signal standard number
- (7) construction note
- (1) wire note

SCALE IN FEET

20 0 20 40

COUPLED LOOPS DETAIL

WIRING SCHEDULE

RUN NO.	ENCLOSURE OR ATTACHMENT	TRAFFIC SIGNALS	PEDESTRIAN SIGNALS	DETECTION: INDUCTIVE LOOPS	DETECTION: PEDESTRIAN	ILLUMINATION: POWER	ILLUMINATION: BRANCH	OPTICAL PREEMPTION	SIGNAL SYSTEM POWER	COORDI-NATION	WIRED SPARES	RUN NO.
1	SAW-CUT			2#12 TP								1
2	SAW-CUT			4#12 TP								2
3	SAW-CUT			6#12 TP								3
4	SIGNAL MAST ARM	1-5/cc										4
5	SIGNAL MAST ARM	1-5/cc						1#20-3cc/s				5
6	SIGNAL MAST ARM	2-5/cc										6
7	SIGNAL MAST ARM	2-5/cc						1#20-3cc/s				7
8	SIGNAL MAST ARM	3-5/cc						1#20-3cc/s				8
9	ILLUM. MAST ARM					2#10 PB						9
10	1" PVC			1#18-4cc/s								10
11	2" RM									1#18-4cc/s		11
12	2" PVC									1#18-4cc/s		12
13	2" PVC			1#18-4cc/s						1#18-4cc/s		13
14	1" PVC			2#12 TP								14
15	1-1/2" RM								2#4			15
16	2" PVC			3#18-4cc/s						1#18-4cc/s		16
17	2" PVC			4#18-4cc/s						1#18-4cc/s		17
18	1" PVC			4#12 TP								18
19	1" PVC			6#12 TP								19
20	1-1/4" PVC			8#12 TP								19
21	2" RM	1-5/cc	1-5/cc		1#18-4cc/s		2#12	1#20-3cc/s			1-5/cc	21
22	2" RM	1-5/cc	1-5/cc		1#18-4cc/s	2#10	1#12	1#20-3cc/s			1-5/cc	22
23	2" RM	2-5/cc	1-5/cc		1#18-4cc/s		2#12	1#20-3cc/s			1-5/cc	23
24	2" RM	1-5/cc	1-5/cc		1#18-4cc/s		2#12	1#20-3cc/s			1-5/cc	24
25	2" RM	2-5/cc	1-5/cc	1#18-4cc/s	1#18-4cc/s		2#12	1#20-3cc/s			1-5/cc	25
26	3" RM	3-5/cc	2-5/cc	11#18-4cc/s	2#18-4cc/s		4#12	2#20-3cc/s		2#18-4cc/s	2-5/cc	26

WIRING SCHEDULE LEGEND:

PB = Pole and Bracket cable
TP = Twisted Pair(s) of #12 AWG Type USE inductive loop wires
RM = Rigid Metal conduit
PVC = Rigid Polyvinyl Chloride (plastic) conduit
5/cc = Five-conductor traffic signal display cable
4cc/s = multi-conductor communication cable having stranded copper conductors, aluminum/polyester foil shield, and high-density polyethylene jacket

EXISTING LOOP DETECTOR TO BE REPLACED.

PRESERVE AND PROTECT EXISTING TRAFFIC SIGNAL INTERCONNECT AND ADVANCE DETECTOR CONDUIT, CABLE, AND JUNCTION BOXES.

(1) RELOCATE AND/OR REPLACE EXISTING TRAFFIC SIGNAL INTERCONNECT AND ADVANCE DETECTOR CONDUIT, CABLE AND JUNCTION BOXES.

PHASE SEQUENCE DIAGRAM

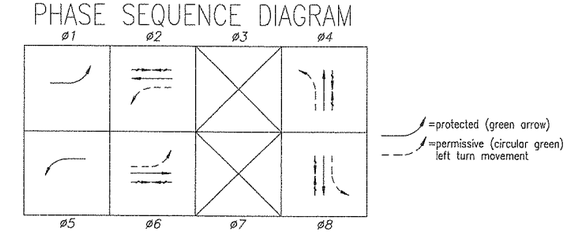

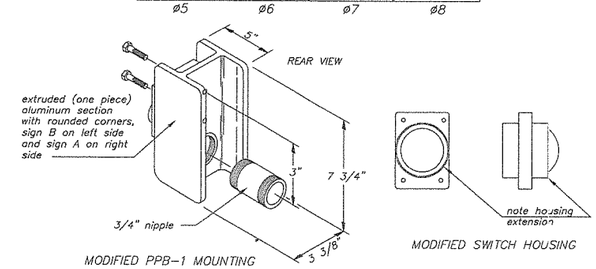

MODIFIED PPB-1 MOUNTING — MODIFIED SWITCH HOUSING

PEDESTRIAN PUSHBUTTON DETAIL

Fed. Aid No. STPH-4392(011)

76SIGPLAN9-020TRS2

DESIGNED EB
DRAWN KB
CRP 394122
HOR. 1"=20'
VERT. NA
DATE 1/16/04
DWG: TRS2
SHEET 71 OF 93

CALL 48 HOURS BEFORE YOU DIG 1-800-553-4344 "It's the Law" NORTHWEST UTILITIES NOTIFICATION CENTER

DESIGN & ENGINEERING DIVISION
DESIGN SECTION

NE 76th ST. @ NE 124th AVE. SIGNAL
TRAFFIC SIGNAL PLAN

STATE OF WASHINGTON EUGENE S. BIRCH 17827 REGISTERED PROFESSIONAL ENGINEER EXPIRES JULY 17, 2005

CLARK COUNTY WASHINGTON

WIRING SCHEDULE

RUN NO. △	ENCLOSURE OR ATTACHMENT	TRAFFIC SIGNALS	PEDES-TRIAN SIGNALS	DETECTION: PEDES-TRIAN	DETECTION: INDUCTIVE LOOPS	ILLUMINATION: POWER	ILLUMINATION: BRANCH	OPTICAL PRE-EMPTION	FLASHING SCHOOL SIGN	SIGNAL SYSTEM POWER	COORDI-NATION	WIRED SPARES	RUN NO. △
1	SAW-CUT				2#12 TP								1
2	SAW-CUT				4#12 TP								2
3	SIGNAL MAST ARM	1-5/cc											3
4	SIGNAL MAST ARM	2-5/cc											4
5	SIGNAL MAST ARM	2-5/cc						1#20-3cc/s					5
6	SIGNAL MAST ARM	3-5/cc											6
7	SIGNAL MAST ARM	3-5/cc						1#20-3cc/s					7
8	SIGNAL MAST ARM	3-5/cc						2#20-3cc/s					8
9	ILLUM. MAST ARM						2#10 PB						9
10	1" RM		1-5/cc										10
11	1" PVC				1#18-4cc/s								11
12	2" PVC										1#18-4cc/s		12
13	1" PVC		1-5/cc		1#18-4cc/s								13
14	1" PVC				1#18-4cc/s						1#18-4cc/s		14
15	1" RM				1#18-4cc/s						1#18-4cc/s		15
16	1" PVC				2#12 TP								16
17	1" RM									2#6			17
18	2" PVC				2#18-4cc/s						1#18-4cc/s		18
19	1" RM								3#12				19
20	1" PVC				4#12 TP								20
21	2" PVC		1-5/cc		4#18-4cc/s						1#18-4cc/s		21
22	1" PVC				8#12 TP								22
23	2" RM	1-5/cc	1-5/cc	1#18-4cc/s		2#10	1#12	1#20-3cc/s				4#12	23
24	2" RM	1-5/cc	1-5/cc	1#18-4cc/s	2#18-4cc/s	2#10	1#12	1#20-3cc/s				4#12	24
25	2-1/2" RM	4-5/cc	1-5/cc				2#12	2#20-3cc/s				4#12 & 1-5cc	25
26	3" RM	4-5/cc	2-5/cc		4#18-4cc/s		2#12	2#20-3cc/s			1#18-4cc/s	4#12 & 1-5cc	26

WIRING SCHEDULE LEGEND:

PB = Pole and Bracket cable
TP = Twisted Pair(s) of #12 AWG Type USE inductive loop wires
RM = Rigid Metal conduit
PVC = Rigid Polyvinyl Chloride (plastic) conduit
5/cc = Five-conductor traffic signal display cable
cc/s = multi-conductor communication cable having stranded copper conductors, aluminum/polyester foil shield, and high-density polyethylene jacket

DETECTION RACK

MODULE NO.	1	2	3	4	5	6	
MODULE TYPE / CHANNEL	PWR. SUPPLY	VEHICLE	VEHICLE	VEHICLE	VEHICLE	PREEMPT.	
1	MODULE 2	21/51	23	A1	61	NORTH-BOUND	EAST-BOUND
2	MODULE 3	52	24	81	SPARE		
3	MODULE 4	53	62	A2	SPARE	SOUTH-BOUND	WEST-BOUND
4	MODULE 5	22	63	82	SPARE		

common home-run cable (4cc/s)

PHASE SEQUENCE DIAGRAM

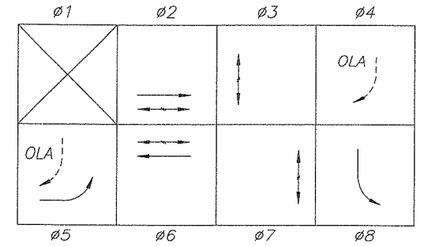

= protected (green arrow) left turn movement
= permissive (circular green) left turn movement

DETECTION SYSTEM

All vehicle detection inductive loops shall conform to the following:

INDUCTIVE LOOP(S)	TYPE OF LOOP	SIZE (W x L)	# OF TURNS	DISTANCE (NEAR-FAR) FROM STOP BAR ON THE APPROACH
82, A2	SQUARE	5' x 5'	4	120' TO 125'
23, 62	SQUARE	6' x 6'	4	269' TO 275'
24, 63	SQUARE	6' x 6'	4	374' TO 380'
53	RECTANGULAR	6' x 15'	3	46' TO 61'
A1	RECTANGULAR	6' x 25'	4	-4' TO 21'
22, 61	RECTANGULAR	6' x 25'	4	80' TO 105'
52	RECTANGULAR COUPLED	(3'+ 3') X 30'	2 & 2	-8' TO -38'
81	RECTANGULAR COUPLED	(3'+ 3') X 40'	2 & 2	-4' TO 36'
21/51	RECTANGULAR COUPLED	(3'+ 3') X 65'	2 & 2	-4' TO 61'

All loops shall be centered in the detected lane, except vehicle loops adjacent to curbs shall be located to have 3' between the sawcut and the lane line to the left of the loop.

SIGNAL HEAD DISPLAYS

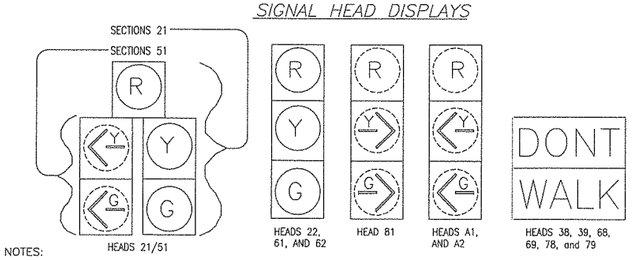

NOTES:

Traffic signal heads 81, A1, A2 and the two arrow sections of head 21/51 shall be optically programmed.

Traffic signl heads shall have 12" sections, square doors, backplates (except head 21/51 which does not require backplates), Type M mounts, and tunnel visors (except optically programmed sections, which have cadet visors).

Pedestrian signal heads are 16"(H) x 19 1/2"(W) x 10 1/2"(D) units having Light Emitting Diode (LED) "WALK" and 'DONT WALK" messages with tunnel visors having a shelf between DONT and WALK and mounting types are as follows:

HEAD(S)	POLE NUMBER(S)	MOUNT TYPE
39/68	4	A
78	2	B
69/79	1	C
38	3	D

CONSTRUCTION NOTES

(1) At approximate Sta. N.E. 130TH AVENUE 0+50 (34' Rt.) install pedestrian signal standard (1) complete with pedestrian signal heads 69 and 79, and two pedestrian pushbutton assemblies.

(2) At approximate Sta. N.E. 76TH STREET 34+07 (28.5' Rt.) install signal standard (2) complete with 22.5' and 45' mast arms with traffic signal heads 21/51, 22, 81, A1, and A2, two optical preemption detectors, mast arm mounted regulatory and street name signs, pedestrian signal head 78, terminal cabinet, and one pedestrian pushbutton assembly. Illumination consists of a 12' mast arm with a 250 watt HPS lamp in a flat glass refractor luminaire having a Type III medium cut-off light distribution.

(3) At approximate Sta. N.E. 76TH STREET 33+38 (28.5' Rt.) install pedestrian signal standard (3) complete with pedestrian signal head 38, and one pedestrian pushbutton assembly.

(4) At approximate Sta. N.E. 76TH STREET 33+38 (39' Lt.) install signal standard (4) complete with 30' mast arm with traffic signal heads 61 and 62, one optical preemption detector, mast arm mounted street name sign, pedestrian signal heads 39 and 68, terminal cabinet with 30 amp test switch for illumination system, and two pedestrian pushbutton assemblies. Illumination consists of a 16' mast arm with a 250 watt HPS lamp in a flat glass refractor luminaire having a Type III medium cut-off light distribution.

(5) At approximate Sta. N.E. 130TH AVENUE 0+71 (25' Rt.) install P-1 controller cabinet (with attached Type I electrical service) on modified M-pad foundation as per the standard plans, standard specifications, and the special provisions. The door for this cabinet shall open to the west, and the footing pad in front of the cabinet shall extend two (2) feet from the bottom of the pedestal and match the adjacent sidewalk. Two spare 2" rigid metal conduits shall be provided into this cabinet.

(6) Run conduit and feeder wires up existing pole to weatherhead. Weatherhead shall be located within one (1) foot of the neutral wire and there shall be at least five (5) feet of slack wire at the weatherhead for electrical hookup by C.P.U.

(7) Install epoxy splice (cap) on the ends of the future coordination cable terminated in this junction box.

(8) Run conduit and coordination cable into existing cabinet using existing spare conduit in base. Provide four feet of slack cable for hook-up by others.

(9) Coil and tie off fifteen (15) feet of the three wires for the school flashing sign in this junction box.

LEGEND

- Type III signal standard with two mast arms and terminal cabinet
- Type III signal standard with terminal cabinet
- P-1 traffic signal controller cabinet with attached Type I electrical service
- Type I electrical junction box
- optically programmed traffic signal display
- conventional traffic signal display
- pedestrian signal display
- optical preemption detector
- Clark Public Utilities power/luminaire pole
- pedestrian signal standard
- existing right-of-way
- rigid metal conduit
- rigid polyvinyl chloride (PVC) conduit
- signal standard number
- construction note
- wire note

T. 2 N., R.2 E., W.M.

SCALE IN FEET
20 0 20 40

EXISTING LOOP DETECTOR TO BE REPLACED.

PRESERVE AND PROTECT EXISTING TRAFFIC SIGNAL INTERCONNECT AND ADVANCE DETECTOR CONDUIT, CABLE, AND JUNCTION BOXES.

(1) RELOCATE AND/OR REPLACE EXISTING TRAFFIC SIGNAL INTERCONNECT AND ADVANCE DETECTOR CONDUIT, CABLE AND JUNCTION BOXES.

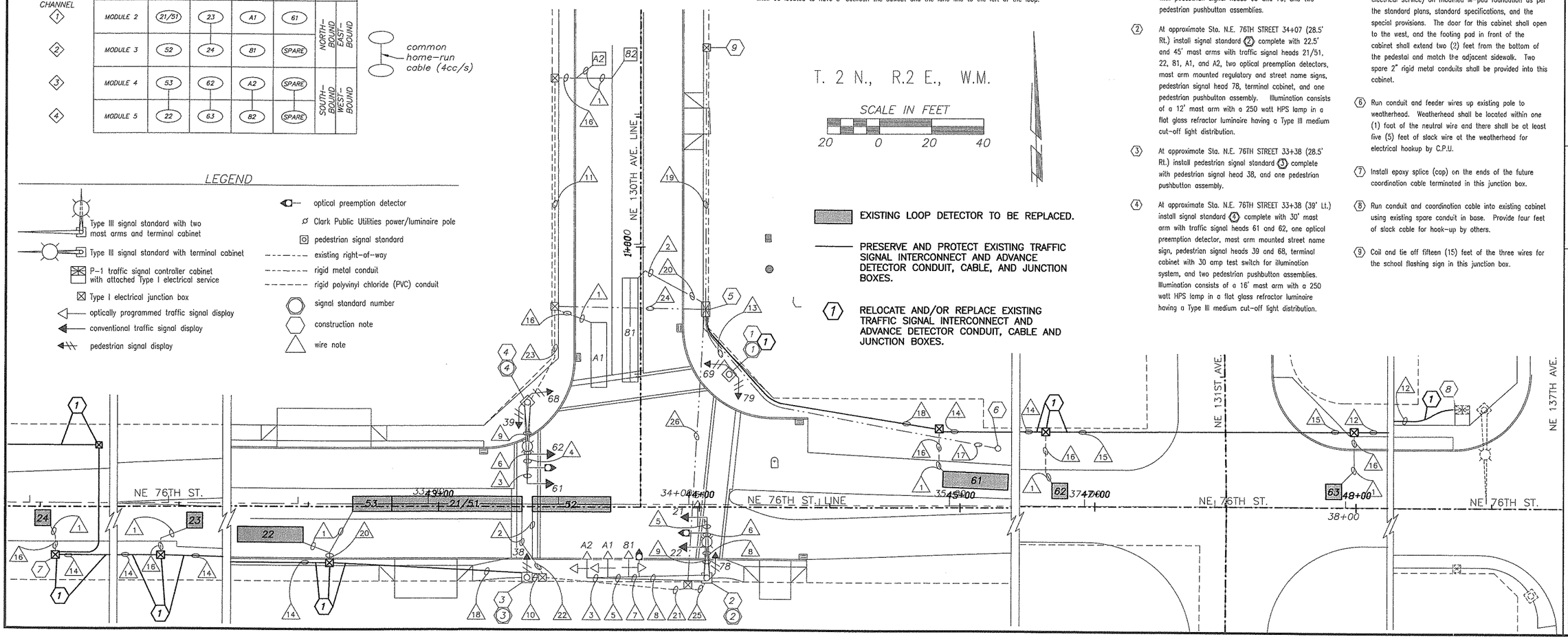

NE76BASE9-02-TRS3

DESIGNED	EB
DRAWN	KB
CRP	371622
SCALE HOR.	1"=20'
SCALE VERT.	NA (TRS3)
DATE	1/16/04
SHEET	72 OF 93

CALL 48 HOURS BEFORE YOU DIG 696-4848 "It's the Law"
CLARK COUNTY UTILITIES COORDINATING COUNCIL

DESIGN & ENGINEERING DIVISION
DESIGN SECTION

N.E. 76TH STREET AT N.E. 130TH AVENUE TRAFFIC SIGNAL PLAN

STATE OF WASHINGTON
BERGETH
PROFESSIONAL ENGINEER
EXPIRES AUG 17, 2005
2-19-04

CLARK COUNTY WASHINGTON

WIRING SCHEDULE

RUN NO. X	ENCLOSURE OR ATTACHMENT	TRAFFIC SIGNALS	PEDESTRIAN SIGNALS	DETECTION: INDUCTIVE LOOPS	DETECTION: PEDESTRIAN	ILLUMINATION: POWER	ILLUMINATION: BRANCH	OPTICAL PREEMPTION	SIGNAL SYSTEM POWER	COORDI-NATION	WIRED SPARES	RUN NO. X
1	SAW-CUT			2#12TP								1
2	SAW-CUT			4#12TP								2
3	SIGNAL MAST ARM	1-5/cc										3
4	SIGNAL MAST ARM	2-5/cc										4
5	SIGNAL MAST ARM	1-5/cc						1#20-3cc/s				5
6	SIGNAL MAST ARM	2-5/cc						1#20-3cc/s				6
7	SIGNAL MAST ARM	3-5/cc						1#20-3cc/s				7
8	ILLUM. MAST ARM						2#10 P.B.					8
9	1" RM								2#4			9
10	1" PVC			2#12TP								10
11	2" PVC			1#18-4cc/s						1#18-4cc/s		11
12	1" RM			DELETE THIS RUN								12
13	2" PVC			3#18-4cc/s*	← USE EXISTING COORDINATION CABLE FOR INDUCTIVE LOOP DETECT →					1#18-4 cc/s		13 (11)
14	1" PVC			4#12TP								14
15	2" PVC			3#18-4cc/s						1#18-4cc/s		15
16	1" PVC			6#12TP								16
17	1" PVC			8#12TP								17
18	2" RM	2-5/cc	1-5/cc		1#18-4cc/s		2#12	1#20-3cc/s			2#12	18
19	2" RM	2-5/cc	1-5/cc		1#18-4cc/s	2#10 & 1#12	1#12	1#20-3cc/s			2#12	19
20	2 1/2" RM	2-5/cc	1-5/cc	3#18-4cc/s	1#18-4cc/s		2#12	1#20-3cc/s		1#18-4cc/s	2#12	20
21	3" RM	4-5/cc	2-5/cc	8#18-4cc/s	2#18-4cc/s		4#12	2#20-3cc/s		2#18-4cc/s	4#12	21
22	3 1/2" RM	*6-5/cc	3-5/cc	11#18-4cc/s	3#18-4cc/s		*6#12	*3#20-3cc/s		2#18-4cc/s	6#12	22 (11)
23	2" RM				5#18-4cc/s					1#18-4cc/s		23
24	2" PVC				SEE TRAFFIC SIGNAL INTERCONNECT PLAN					1#18-4cc/s		24
25	2" PVC				EXISTING INTERCONNECT RUN							25

Run 13– Use existing coordination run for detection *Use cables presently reserved for future use.
Run 18– Only for standard (4)

WIRING SCHEDULE LEGEND:

*Connect to existing spare 2"RM conduit in the controller cabinet base.

cc = five conductor #14 AWG traffic signal control cable
PB = Pole and Bracket cable
TP = Twisted Pair(s) of #12AWG Type USE loop wires
RM = Rigid Metal conduit
PVC = Rigid Polyvinyl Chloride (plastic) conduit
cc/s = multi-conductor communication cable having stranded copper conductors aluminum/polyester foil shield, and high-density polyethylene jacket insulation.

PHASE SEQUENCE DIAGRAM

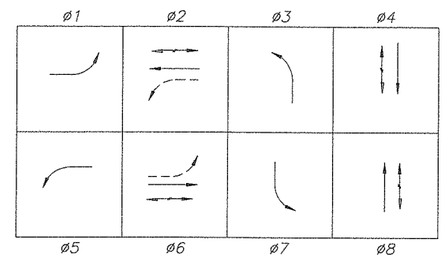

EXISTING LOOP DETECTOR TO BE REPLACED.

PRESERVE AND PROTECT EXISTING TRAFFIC SIGNAL INTERCONNECT AND ADVANCE DETECTOR CONDUIT, CABLE, AND JUNCTION BOXES.

(1) RELOCATE AND/OR REPLACE EXISTING TRAFFIC SIGNAL INTERCONNECT AND ADVANCE DETECTOR CONDUIT, CABLE AND JUNCTION BOXES.

SIGNAL HEAD DISPLAYS

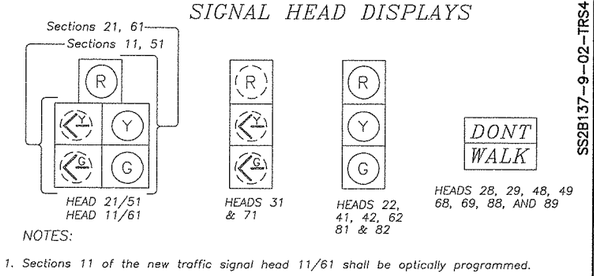

NOTES:

1. Sections 11 of the new traffic signal head 11/61 shall be optically programmed.
2. Traffic signal heads shall have 12" sections, square doors, backplates, Type M mounts, and tunnel visors (except optically programmed sections, which have cutawway visors).
3. Pedestrian signal heads are existing 16" (H) x 19 1/2"(W) x 10 1/2" (D) fiberoptic-type with Type A mounts, tunnel visors and a shelf between DONT and WALK.

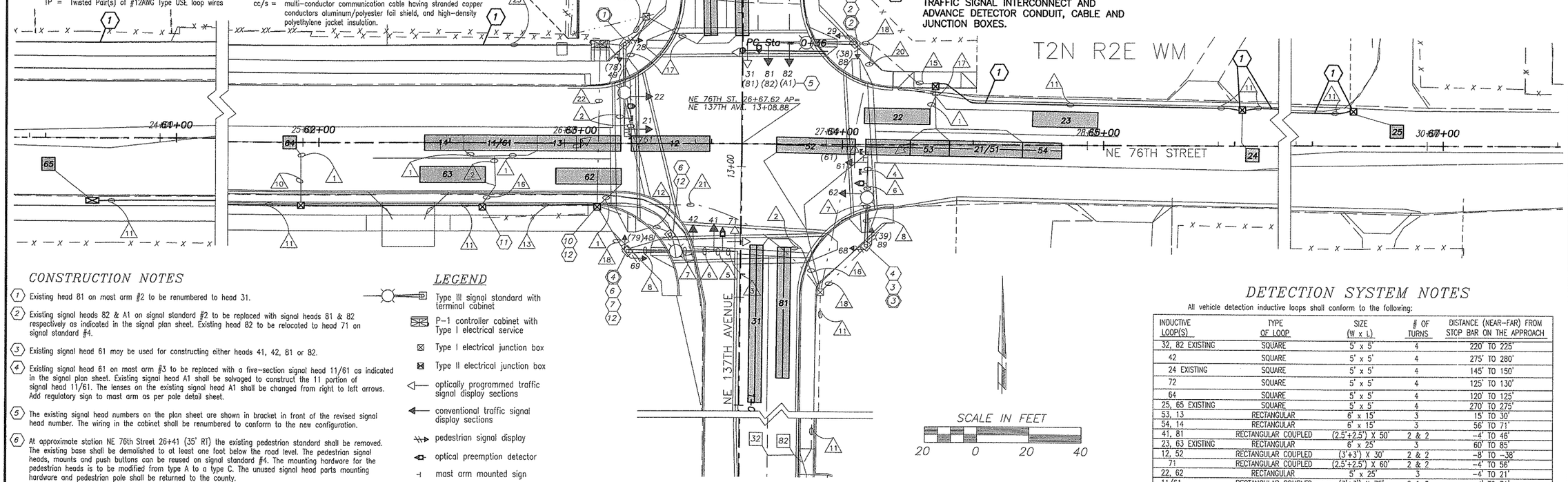

CONSTRUCTION NOTES

(1) Existing head 81 on mast arm #2 to be renumbered to head 31.

(2) Existing signal heads 82 & A1 on signal standard #2 to be replaced with signal heads 81 & 82 respectively as indicated in the signal plan sheet. Existing head 82 to be relocated to head 71 on signal standard #4.

(3) Existing signal head 61 may be used for constructing either heads 41, 42, 81 or 82.

(4) Existing signal head 61 on mast arm #3 to be replaced with a five-section signal head 11/61 as indicated in the signal plan sheet. Existing signal head A1 shall be salvaged to construct the 11 portion of signal head 11/61. The lenses on the existing signal head A1 shall be changed from right to left arrows. Add regulatory sign to mast arm as per pole detail sheet.

(5) The existing signal head numbers on the plan sheet are shown in bracket in front of the revised signal head number. The wiring in the cabinet shall be renumbered to conform to the new configuration.

(6) At approximate station NE 76th Street 26+41 (35' RT) the existing pedestrian standard shall be removed. The existing base shall be demolished to at least one foot below the road level. The pedestrian signal heads, mounts and push buttons can be reused on signal standard #4. The mounting hardware for the pedestrian heads is to be modified from type A to a type C. The unused signal head parts mounting hardware and pedestrian pole shall be returned to the county.

(7) At approximate station NE 137th Avenue S. 12+67 (43' LT) install signal standard #4 complete with 40' mast arm with traffic signal heads 71, 41 & 42, optical preemption detector, mast arm mounted street name sign, terminal cabinet, pedestrian signal heads 48 & 69 and two push button assemblies. Illumination consists of a 16' mast arm with a 250 watt HPS lamp in a flat glass refractor luminaire having a type III medium cut-off distribution.

(8) The red and green sections of heads 81, 82, 41, and 42 and the circular green sections of heads11/61,21/51, 22 & 62 shall be 12" LED type.

(9) The existing pedestrian signal shall be reassigned to the following phases:

EXISTING	NEW
29	29
38	88
39	89
68	68
69	69
79	48
78	49
28	28

The wire labeling in the signal sections and the terminal and controller cabinets shall be reconfigured to conform to the new phases and numbering.

(10) The existing junction box shall be elevated to sidewalk level.

(11) The existing coordination cable in run 13 shall be used for hooking up detectors 13 and 14.

(12) The existing spare wires and cables in existing junction box shall be directed to signal standard #4.

LEGEND

- Type III signal standard with terminal cabinet
- P-1 controller cabinet with Type I electrical service
- Type I electrical junction box
- Type II electrical junction box
- optically programmed traffic signal display sections
- conventional traffic signal display sections
- pedestrian signal display
- optical preemption detector
- mast arm mounted sign
- capped tenon
- UED4 power pedestal
- CPU power pole
- rigid metal conduit
- rigid polyvinyl chloride PVC) conduit
- (1) signal standard number
- (1) construction note
- (1) wire note

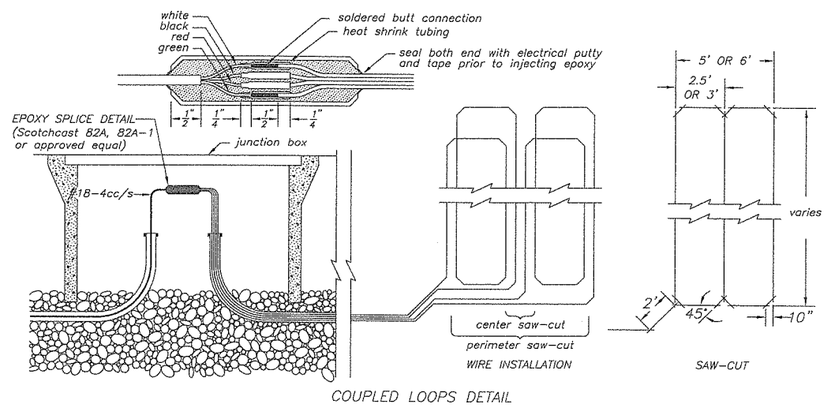

COUPLED LOOPS DETAIL

DETECTION SYSTEM NOTES

All vehicle detection inductive loops shall conform to the following:

INDUCTIVE LOOP(S)	TYPE OF LOOP	SIZE (W x L)	# OF TURNS	DISTANCE (NEAR-FAR) FROM STOP BAR ON THE APPROACH
32, 82 EXISTING	SQUARE	5' x 5'	4	220' TO 225'
42	SQUARE	5' x 5'	4	275' TO 280'
24 EXISTING	SQUARE	5' x 5'	4	145' TO 150'
72	SQUARE	5' x 5'	4	125' TO 130'
64	SQUARE	5' x 5'	4	120' TO 125'
25, 65 EXISTING	SQUARE	5' x 5'	4	270' TO 275'
53, 13	RECTANGULAR	6' x 15'	3	15' TO 30'
54, 14	RECTANGULAR	6' x 15'	3	56' TO 71'
41, 81	RECTANGULAR COUPLED	(2.5'+2.5') X 50'	2 & 2	-4' TO 46'
23, 63 EXISTING	RECTANGULAR	6' x 25'	3	60' TO 85'
12, 52	RECTANGULAR COUPLED	(3'+3') X 30'	2 & 2	-8' TO -38'
71	RECTANGULAR COUPLED	(2.5'+2.5') X 60'	2 & 2	-4' TO 56'
22, 62	RECTANGULAR	5' x 25'	3	-4' TO 21'
11/61	RECTANGULAR COUPLED	(3'+3') X 75'	2 & 2	-4' TO 71'

All loops shall be centered in the detected lane, except vehicle loops adjacent to curbs shall be located to have 3'- 0" between the sawcut and the lane line to the left of the loop.

DETECTION RACK (EXISTING)

	1	2	3	4	5	6	7	8A	8B
	PWR. SUPPLY	VEHICLE	VEHICLE	VEHICLE	VEHICLE	VEHICLE	VEHICLE	PRE EMPT.	PRE EMPT.
1	MODULES 2&3	11/61	62	21/51	22	72	31	NORTH BOUND CHANNEL A	EAST BOUND CHANNEL A
2	MODULES 4&5	52	63	12	23	42	41		
3	MODULES 6&7	13	64	53	24	32	71	SOUTH BOUND CHANNEL B	WEST BOUND CHANNEL B
4	SPARE	14	65	54	25	82	81		

COMMON HOME-RUN CABLE (#18-4cc/s)

SS2B137-9-02-TRS4

CALL 48 HOURS BEFORE YOU DIG 1-800-553-4344 "It's the Law" NORTHWEST UTILITIES NOTIFICATION CENTER

DESIGNED	EK
DRAWN	KB
CRP	380422
HOR.	1"=20'
VERT.	NA
DATE	1/16/04
DWG.	TRS4
SHEET	73 OF 93

DESIGN & ENGINEERING DIVISION
DESIGN SECTION

NE 137TH AVENUE at NE 76TH STREET
TRAFFIC SIGNAL PLAN

STATE OF WASHINGTON BERNARD L. SCHWEIGERT 18027 REGISTERED PROFESSIONAL ENGINEER
EXPIRES AUG. 17, 2005

CLARK COUNTY WASHINGTON

EXISTING SIGNAL HEAD DISPLAYS

LEGEND

PROPOSED	EXISTING		PROPOSED	EXISTING	
		TRAFFIC SIGNAL CONTROLLER & CABINET			LIGHT STANDARD
		ELECTRICAL SERVICE CABINET			UNDERGROUND DETECTOR CONDUIT & WIRE
		JUNCTION BOX TYPE 1			UNDERGROUND CONDUIT & WIRE
		JUNCTION BOX TYPE 2			TYPE 1 INDUCTION DETECTOR LOOP
		JUNCTION BOX TYPE 3			TYPE 2 INDUCTION DETECTOR LOOP
		SIGNAL STANDARD AND MAST ARM			SIGNAL STANDARD NUMBER
		VEHICLE SIGNAL HEAD			CONSTRUCTION NOTE
		VEHICLE SIGNAL HEAD WITH LEFT TURN ARROW			WIRE NOTE
		PEDESTRIAN SIGNAL HEAD			UTILITY POLE
		CAPPED TENON			LUMINAIRE AND POLE
		OPTICOM DETECTOR/INDICATOR			LUMINAIRE

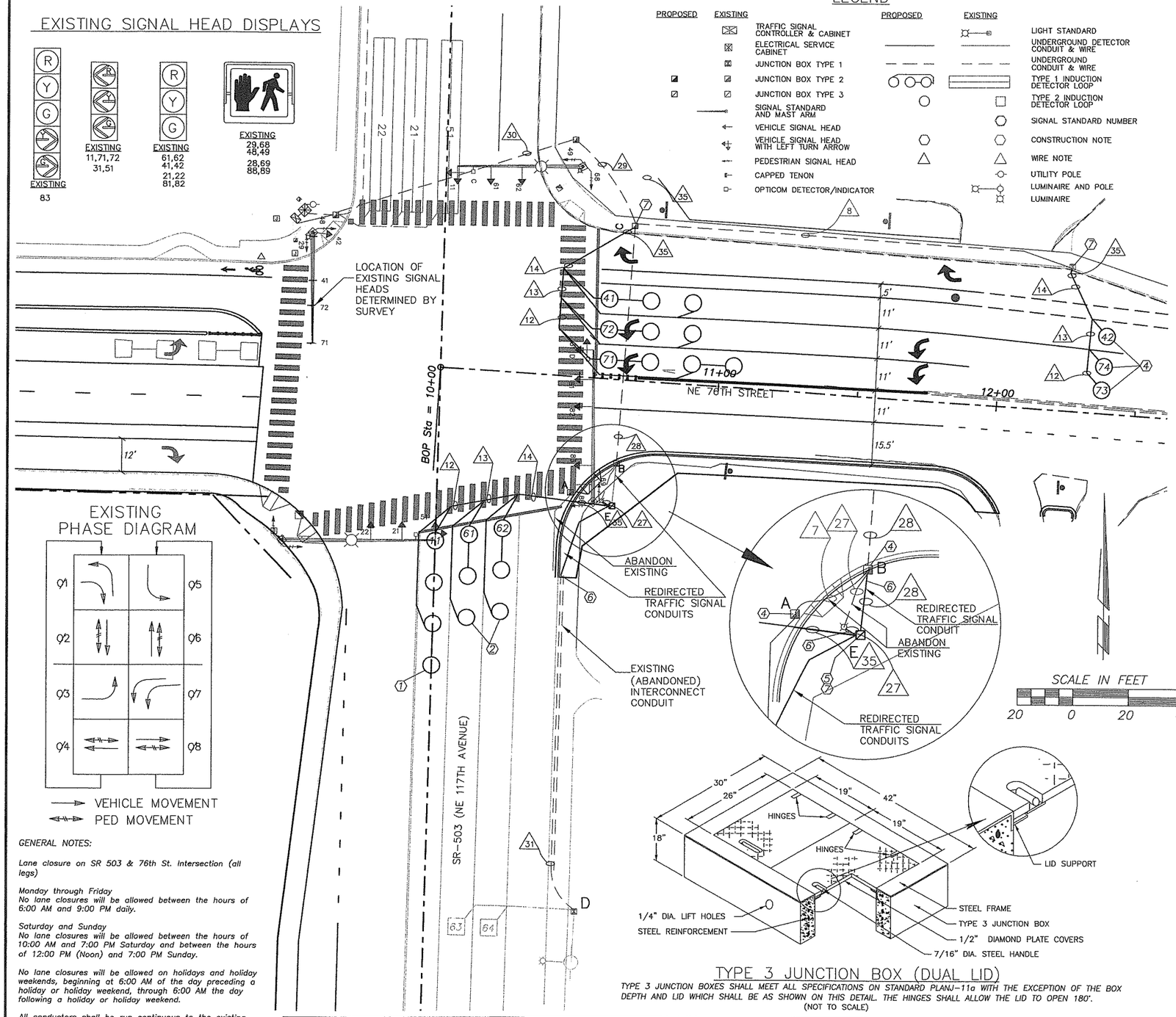

EXISTING PHASE DIAGRAM

TYPE 3 JUNCTION BOX (DUAL LID)

TYPE 3 JUNCTION BOXES SHALL MEET ALL SPECIFICATIONS ON STANDARD PLANJ-11a WITH THE EXCEPTION OF THE BOX DEPTH AND LID WHICH SHALL BE AS SHOWN ON THIS DETAIL. THE HINGES SHALL ALLOW THE LID TO OPEN 180°.
(NOT TO SCALE)

WIRING SCHEDULE

RUN NO.	CONDUIT SIZE	LOOP CABLE 2cs	LOOP CABLE LOOP WIRE	E.V.P. DET 4cs	E.V.P. IND 2cs	PED BUTTON 2cs	PED/VEH HEAD 7C	PED/VEH HEAD 5C	ILLUM #8	SIGNAL CONDUCTOR #14
1	EX MASTARM							EX 1		
2	EX MASTARM			EX 1	EX 1			EX 1		
3	EX MASTARM			EX 1	EX 1			EX 2		
4	EX MASTARM			EX 1	EX 1			EX 3		
5	EX 1"								EX 2	
6	EX 4"	EX 6	EX 6 #14	EX 2	EX 2					EX 42
7	2" (ABANDON)	EX 5							EX 2P	
8	EX 1"	EX 3								
9	EX 2"			EX 1	EX 1	EX 2		EX 3	EX 2	
10	EX SAWCUT		EX 2#12							
11	EX SAWCUT		EX 4#12							
12	**SAWCUT**		**2#14**							
13	**SAWCUT**		**4#14**							
14	**SAWCUT**		**6#14**							
15	EX 4"	EX 6								
16	EX SAWCUT		EX 2#14							
17	EX SAWCUT		EX 4#14							
18	EX 1-1/4"	EX 3								
19	EX MASTARM							EX 1		
20	EX MASTARM			EX 1	EX 1			EX 1		
21	EX MASTARM			EX 1	EX 1			EX 2		
22	EX MASTARM			EX 1	EX 1			EX 3		
23	EX 3"			EX 1	EX 1	EX 2	EX 1	EX 2	EX 2	
24	EX 3"	EX 7		EX 1	EX 1	EX 2	EX 1	EX 2	EX 2	
25	EX 2"			EX 1	EX 1	EX 2				EX 22
26	MASTARM			EX 1	EX 1		EX 1	EX 4		
27	**2"**			EX 1P	EX 1P	EX 2P	EX 2P	EX 2P		
28	**EX 4" R**	**6**		**1**	**1**	**2**	**2**	**2**	**2**	
29	**EX 4"**	**EX 5,6**		**1**	**1**	**2**	**2**	**EX 1,2**	**EX 2**	
30	**EX 4"**	**EX 5,6**		**EX 1,1**	**EX1,1**	**EX2,2**	**EX1,2**	**EX 3,2**	**EX 4**	
31	EX 1-1/4" R	3							EX 2	
32	EX 2-2"	EX 11		EX 2	EX 2	EX 4	EX 1	EX 5		
33	EX 1-1/4"	EX 1								
34	EX 3"	EX11		EX 1	EX 1	EX 2	EX 1	EX 2		
35	**1"**		**6#14**							

LEGEND FOR TABLE

EX 4.1 — EXISTING CABLE TO PROTECT
NEW CABLE TO BE ADDED

*CONTRACTOR TO REMOVE ALL UNUSED WIRES.
R–EXISTING CONDUIT TO BE REROUTED
P–EXISTING RUN TO BE PULLED BACK AND DRAWN THROUGH REROUTED CONDUIT

CONSTRUCTION NOTES:

ABANDON EXISTING DETECTOR LOOP. CONSTRCT MODIFIED TYPE 1 DETECTOR LOOP (50'). SEE DETAILS

ABANDON EXISTING DETECTOR LOOP. CONSTRUCT MODIFIED TYPE 1 DETECTOR LOOP (30'). SEE DETAIL.

ABANDON EXISTING DETECTOR LOOP. CONSTRUCT MODIFIED TYPE 2 DETECTOR LOOP (6') SEE DETAIL.

REMOVE EXISTING JUNCTION BOX, UPSWEEPS, AND ABANDON CONDUIT. EXISTING CONDUCTORS TO REMAIN. BACKFILL AND COMPACT PER STANDARD SPECIFICATIONS.

INSTALL TYPE 3 JUNCTION BOX WITH DUAL LID. SEE DETAIL ON THIS SHEET.

INTERCEPT ALL EXISTING CONDUIT AND EXTEND TO NEW JUNCTION BOX. REWIRE PER WIRING SCHEDULE.

RESPLICE NEW DETECTOR CONDUCTOR TO EXISTING HOME RUN CONDUCTOR.

EXISTING JUNCTION BOXES A AND B SHALL BE REMOVED AND RETURNED TO CLARK COUNTY MAINTENAINCE AND OPERATIONS. THESE JUNCTION BOXES SHALL BE REPLACED WITH A DUAL LID JUNTION BOX AS SHOWN IN THE PLAN.

THE ILLUMINATION CONDUCTOR SHALL BE (2#8) ON THE SOUTH APPROACH OF SR-503 SHALL BE SPLICED AT JUNCTION BOX E.

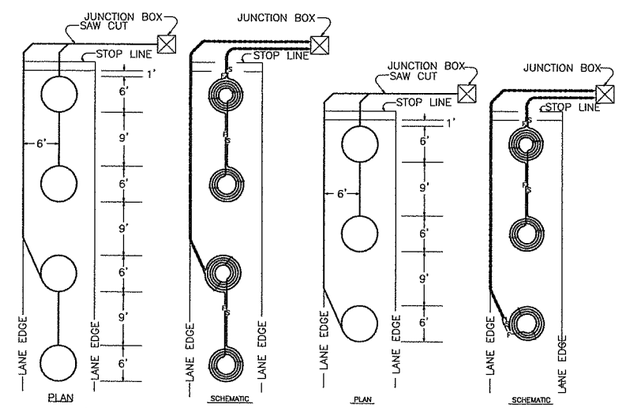

MODIFIED TYPE 1 LOOP (50')

MODIFIED TYPE 1 LOOP (30')

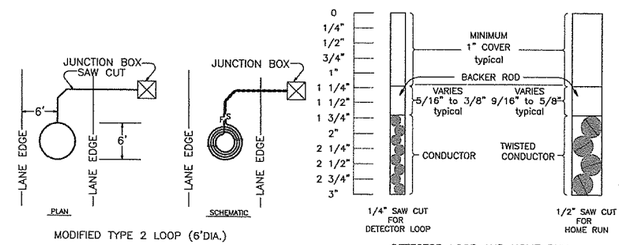

MODIFIED TYPE 2 LOOP (6'DIA.)

DETECTOR LOOP AND HOME RUN SAW CUT DETAILS

GENERAL NOTES:

Lane closure on SR 503 & 76th St. Intersection (all legs)

Monday through Friday
No lane closures will be allowed between the hours of 6:00 AM and 9:00 PM daily.

Saturday and Sunday
No lane closures will be allowed between the hours of 10:00 AM and 7:00 PM Saturday and between the hours of 12:00 PM (Noon) and 7:00 PM Sunday.

No lane closures will be allowed on holidays and holiday weekends, beginning at 6:00 AM of the day preceding a holiday or holiday weekend, through 6:00 AM the day following a holiday or holiday weekend.

All conductors shall be run continuous to the existing controller with the exception of detector loop wire which is spliced with the home run conductor in the junction boxes.

The replaced loops shall be centered in the new lane lines.

All traffic signal related work shall be done in accordance with Washington Standard Specifications for Road, Bridges and Municipal Construction2004, section 8-20 (Illumination, Traffic Signal Systems and Electrical) and Section 9 (Materials) and the special provisions as stipulated in the contract.

CONSTRUCTION NOTES:

ABANDON EXISTING DETECTOR LOOP. CONSTRCT MODIFIED TYPE 1 DETECTOR LOOP (50'). SEE DETAILS

ABANDON EXISTING DETECTOR LOOP. CONSTRUCT MODIFIED TYPE 1 DETECTOR LOOP (30'). SEE DETAIL.

ABANDON EXISTING DETECTOR LOOP. CONSTRUCT MODIFIED TYPE 2 DETECTOR LOOP (6') SEE DETAIL.

REMOVE EXISTING JUNCTION BOX, UPSWEEPS, AND ABANDON CONDUIT. EXISTING CONDUCTORS TO REMAIN. BACKFILL AND COMPACT PER STANDARD SPECIFICATIONS.

INSTALL TYPE 3 JUNCTION BOX WITH DUAL LID. SEE DETAIL ON THIS SHEET. SPLICED AT JUNCTION BOX E.

INTERCEPT ALL EXISTING CONDUIT AND EXTEND TO NEW JUNCTION BOX. REWIRE PER WIRING SCHEDULE.

RESPLICE NEW DETECTOR CONDUCTOR TO EXISTING HOME RUN CONDUCTOR.

EXISTING JUNCTION BOXES A AND B SHALL BE REMOVED AND RETURNED TO CLARK COUNTY MAINTENAINCE AND OPERATIONS. THESE JUNCTION BOXES SHALL BE REPLACED WITH A DUAL LID JUNTION BOX AS SHOWN IN THE PLAN.

THE ILLUMINATION CONDUCTOR SHALL BE (2#8) ON THE SOUTH APPROACH OF SR-503 SHALL BE SPLICED AT JUNCTION BOX E.

DESIGNED	EK
DRAWN	KB
CRP	311022
HOR.	1"=20'
VERT.	NA
DATE	1/16/04
DWG:	TRS5
SHEET 74	OF 93

CALL 48 HOURS BEFORE YOU DIG
1-800-553-4344
"It's the Law"
NORTHWEST UTILITIES NOTIFICATION CENTER

STATE OF WASHINGTON
KRAIG BOLTZ
PROFESSIONAL ENGINEER
EXPIRES JAN. 01, 2006
02-19-04

DESIGN & ENGINEERING DIVISION
DESIGN SECTION

NE 76TH ST (SR-503 TO NE 147TH AVE)
TRAFFIC SIGNAL SYSTEM MODIFICATION

proud past, promising future
CLARK COUNTY
WASHINGTON

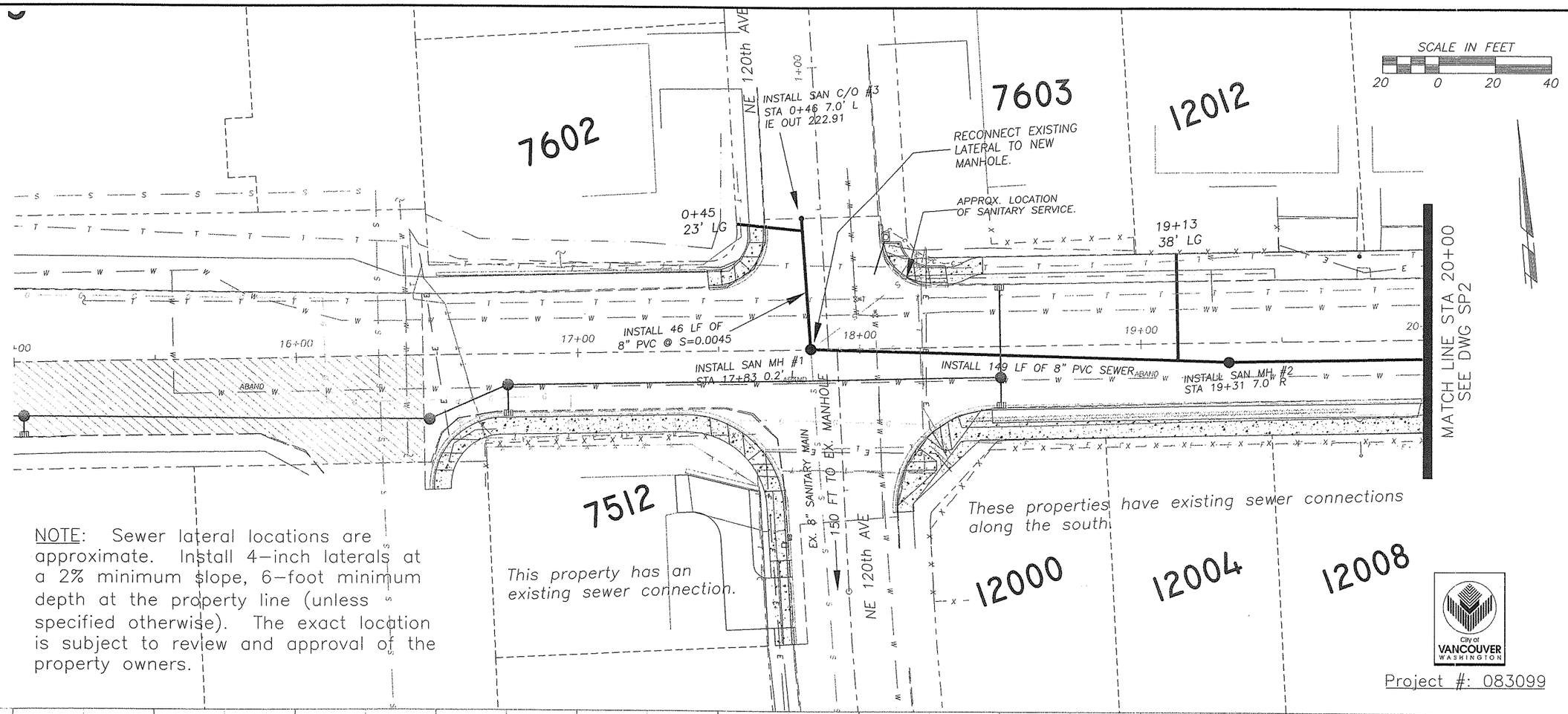

NOTE: Sewer lateral locations are approximate. Install 4-inch laterals at a 2% minimum slope, 6-foot minimum depth at the property line (unless specified otherwise). The exact location is subject to review and approval of the property owners.

Project #: 083099

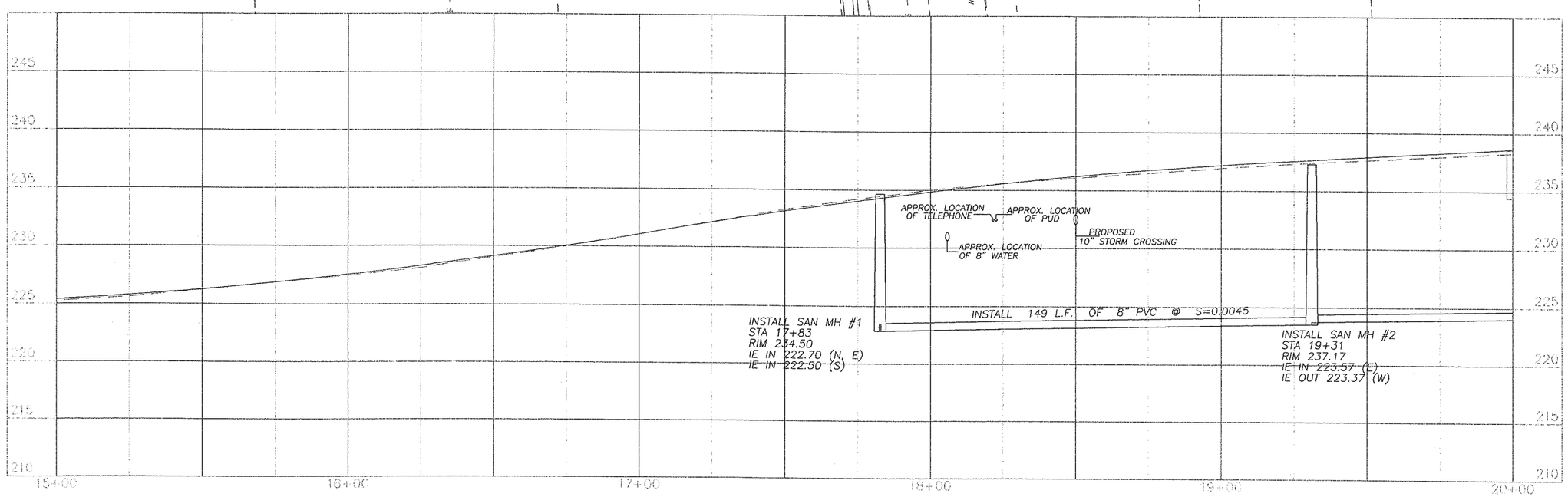

DESIGNED	KAO
DRAWN	KAO
CRP	311022
HOR.	1"=20'
VERT.	1"=5'
DATE	01/05/04
DWG.	SP1
SHEET 75	OF 93

CALL 48 HOURS BEFORE YOU DIG 1-800-553-4344 "It's the Law" NORTHWEST UTILITIES NOTIFICATION CENTER

DONALD O. SKAGGS STATE OF WASHINGTON 17951 REGISTERED PROFESSIONAL ENGINEER
EXPIRES FEB 4, 2005

DESIGN & ENGINEERING DIVISION
DESIGN SECTION

NE 76TH ST (SR-503 TO NE 147TH AVE)
SEWER PLAN B.O.P. TO STA 20+00

City of VANCOUVER WASHINGTON

proud past, promising future
CLARK COUNTY WASHINGTON

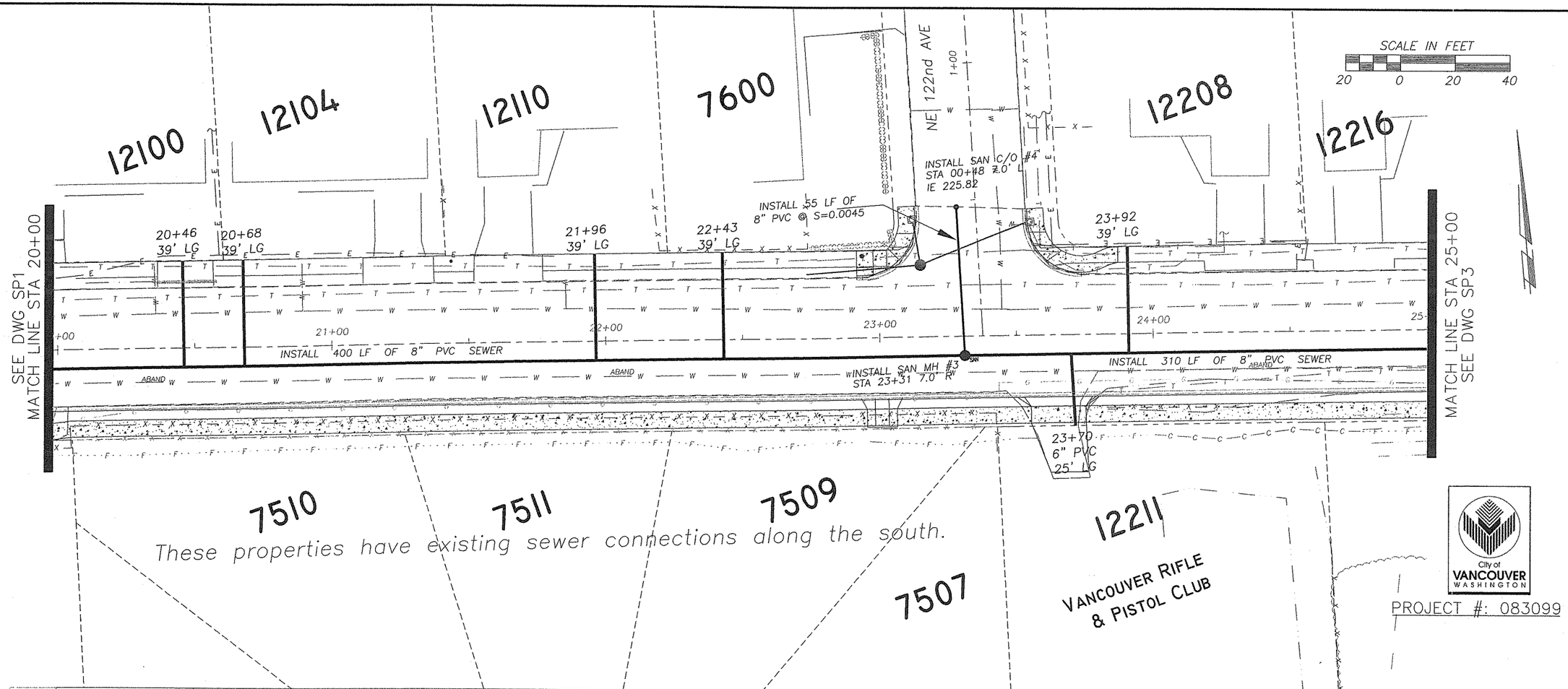

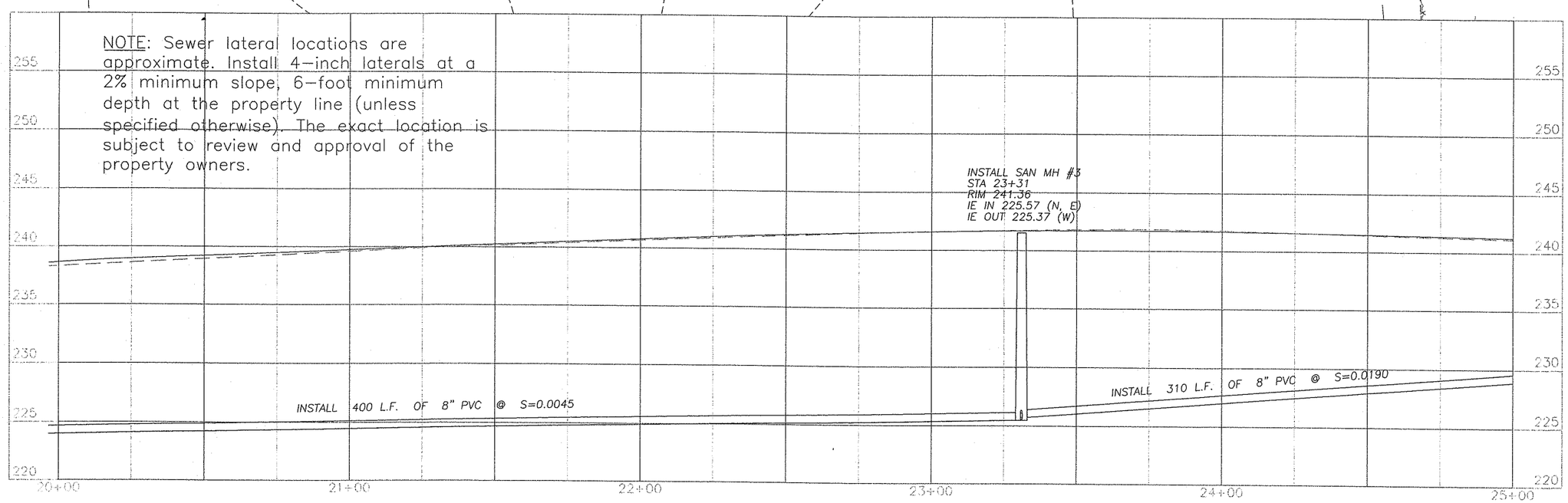

DESIGNED KAO
DRAWN KAO
CRP 311022
HOR. 1"=20'
VERT. 1"=5'
DATE 01/05/04
DWG: SP2
SHEET 76 OF 93

CALL 48 HOURS BEFORE YOU DIG
1-800-553-4344
"It's the Law"
NORTHWEST UTILITIES NOTIFICATION CENTER

DONALD L. SKAGGS
STATE OF WASHINGTON
17951
REGISTERED PROFESSIONAL ENGINEER
EXPIRES FEB 4, 2005

DESIGN & ENGINEERING DIVISION
DESIGN SECTION

NE 76TH ST (SR-503 TO NE 147TH AVE)
SEWER PLAN STA 20+00 TO STA 25+00

proud past, promising future
CLARK COUNTY
WASHINGTON

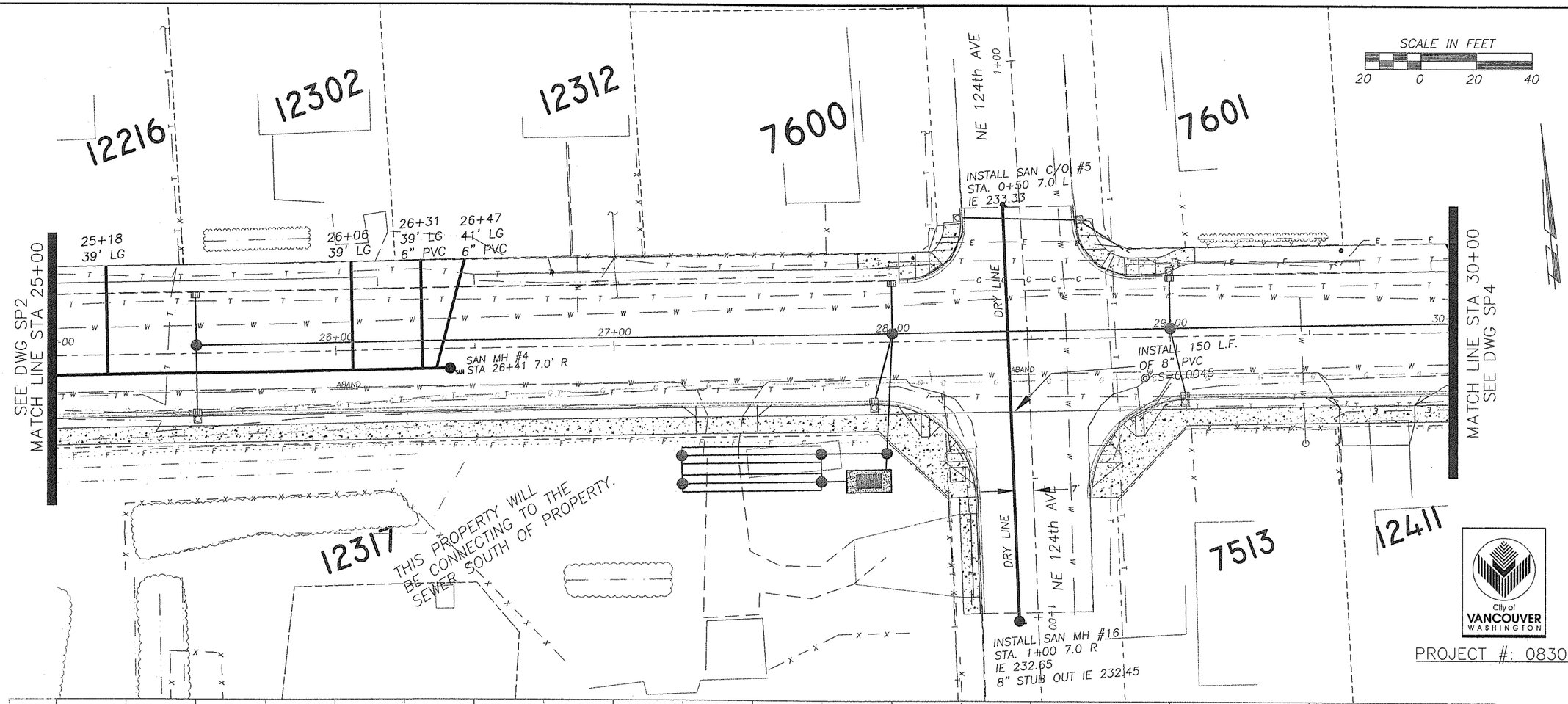

PROJECT #: 083099

NOTE: Sewer lateral locations are approximate. Install 4-inch laterals at a 2% minimum slope, 6-foot minimum depth at the property line (unless specified otherwise). The exact location is subject to review and approval of the property owners.

NOTE: DRY LINE IN NE 124TH WILL BE ACTIVATED BY FUTURE SEWER EXTENSION FROM THE SOUTH. THIS WILL ALLOW FUTURE SERVICE TO 7513, 7600, AND 7601.

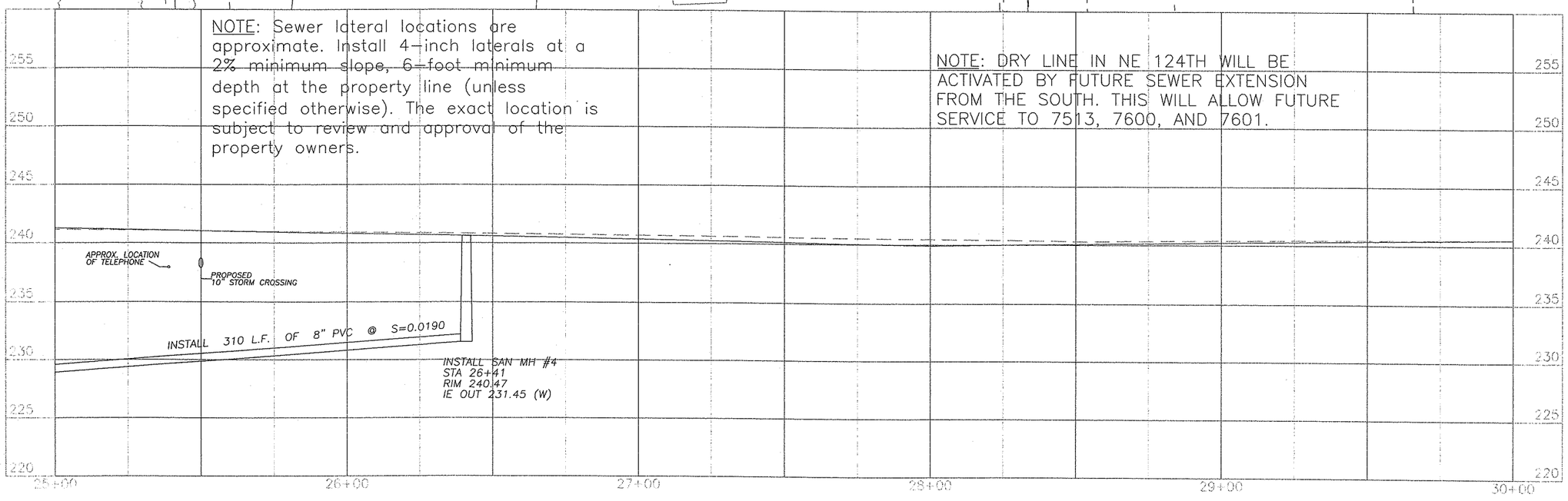

DESIGNED	KAO
DRAWN	KAO
CRP	311022
HOR.	1"=20'
VERT.	1"=5'
DATE	01/05/04
DWG:	SP3
SHEET 77	OF 93

CALL 48 HOURS BEFORE YOU DIG
1-800-553-4344
"It's the Law"
NORTHWEST UTILITIES NOTIFICATION CENTER

DONALD L. SKAGGS
STATE OF WASHINGTON
19583
REGISTERED PROFESSIONAL ENGINEER
EXPIRES FEB 4, 2005

DESIGN & ENGINEERING DIVISION
DESIGN SECTION

NE 76TH ST (SR-503 TO NE 147TH AVE)
SEWER PLAN STA 25+00 TO STA 30+00

proud past, promising future
CLARK COUNTY
WASHINGTON

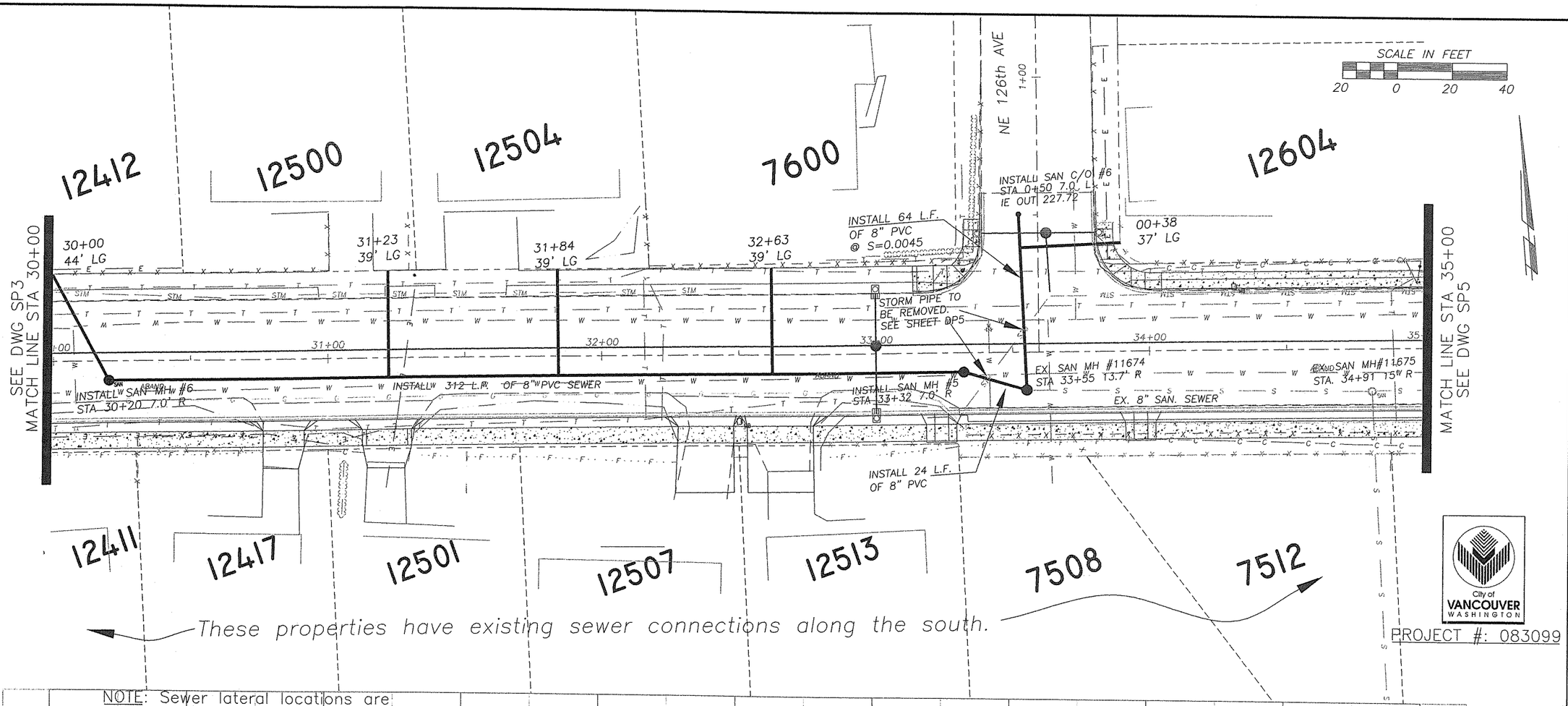

City of VANCOUVER WASHINGTON

PROJECT #: 083099

NOTE: Sewer lateral locations are approximate. Install 4-inch laterals at a 2% minimum slope, 6-foot minimum depth at the property line (unless specified otherwise). The exact location is subject to review and approval of the property owners.

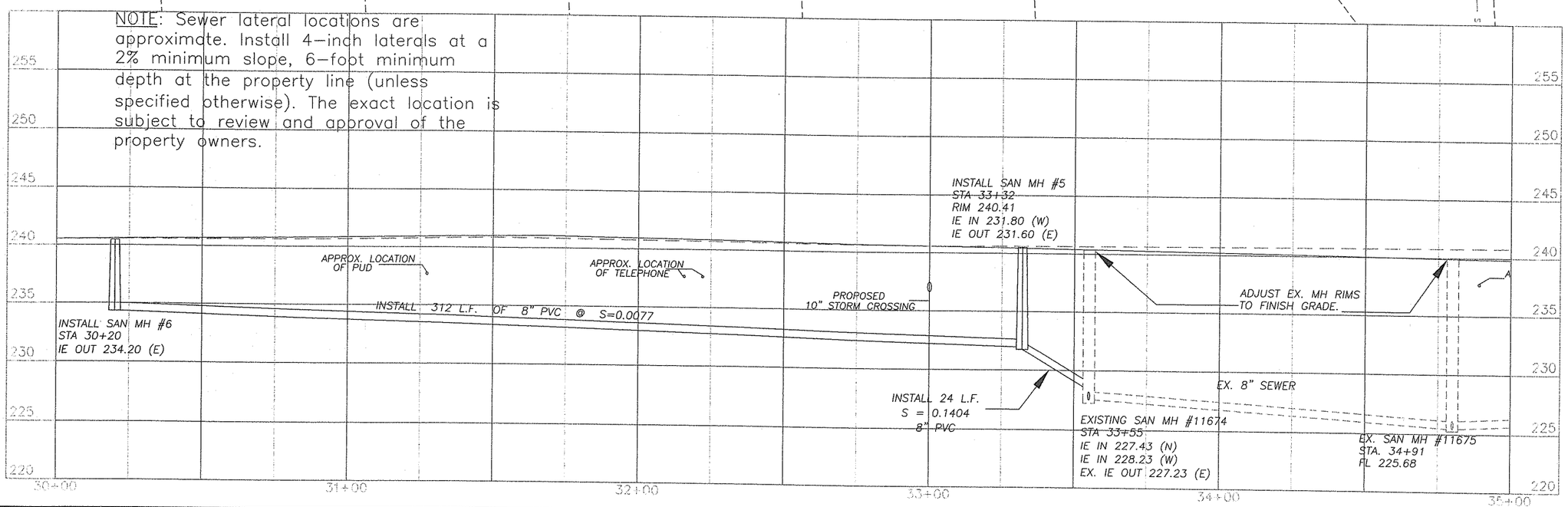

DESIGNED	KAO
DRAWN	KAO
CRP	311022
HOR.	1"=20'
VERT.	1"=5'
DATE	01/05/04
DWG:	SP4
SHEET 78	OF 93

CALL 48 HOURS BEFORE YOU DIG
1-800-553-4344
"It's the Law"
NORTHWEST UTILITIES NOTIFICATION CENTER

DONALD L. SKAGGS
STATE OF WASHINGTON
REGISTERED PROFESSIONAL ENGINEER
EXPIRES FEB 4, 2005

DESIGN & ENGINEERING DIVISION
DESIGN SECTION

NE 76TH ST (SR-503 TO NE 147TH AVE)
SEWER PLAN STA 30+00 TO STA 35+00

proud past, promising future
CLARK COUNTY WASHINGTON

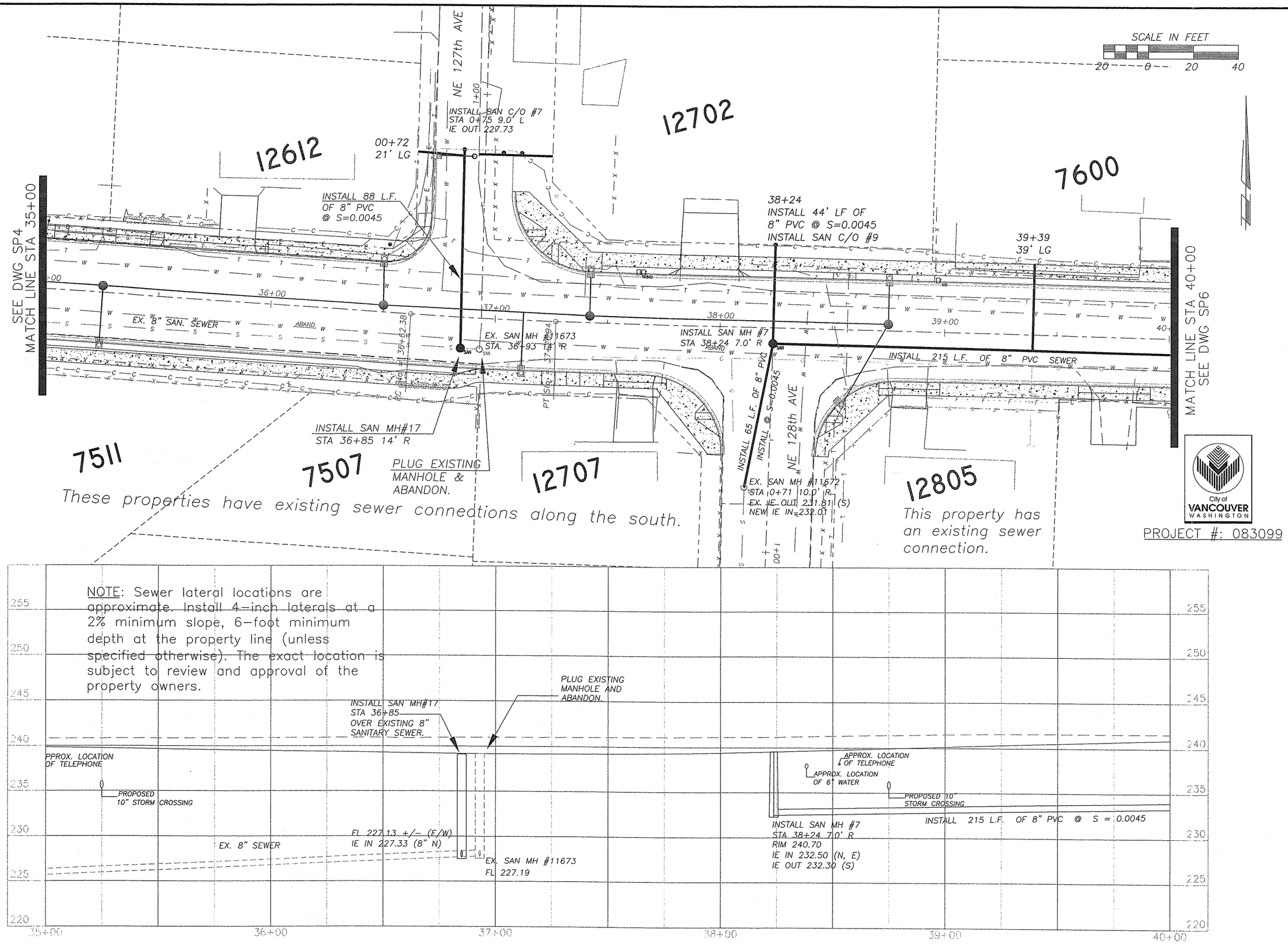

DESIGNED KAO
DRAWN KAO
CRP 311022
HOR. 1"=20'
VERT. 1"=5'
DATE 01/05/04
DWG: SP5
SHEET 79 OF 93

CALL 48 HOURS BEFORE YOU DIG
1-800-553-4344
"It's the Law"
NORTHWEST UTILITIES NOTIFICATION CENTER

DONALD L. SKAGGS
STATE OF WASHINGTON
PROFESSIONAL ENGINEER
EXPIRES FEB 4, 2005

DESIGN & ENGINEERING DIVISION
DESIGN SECTION

NE 76TH ST (SR-503 TO NE 147TH AVE)
SEWER PLAN STA 35+00 TO STA 40+00

proud past, promising future
CLARK COUNTY
WASHINGTON

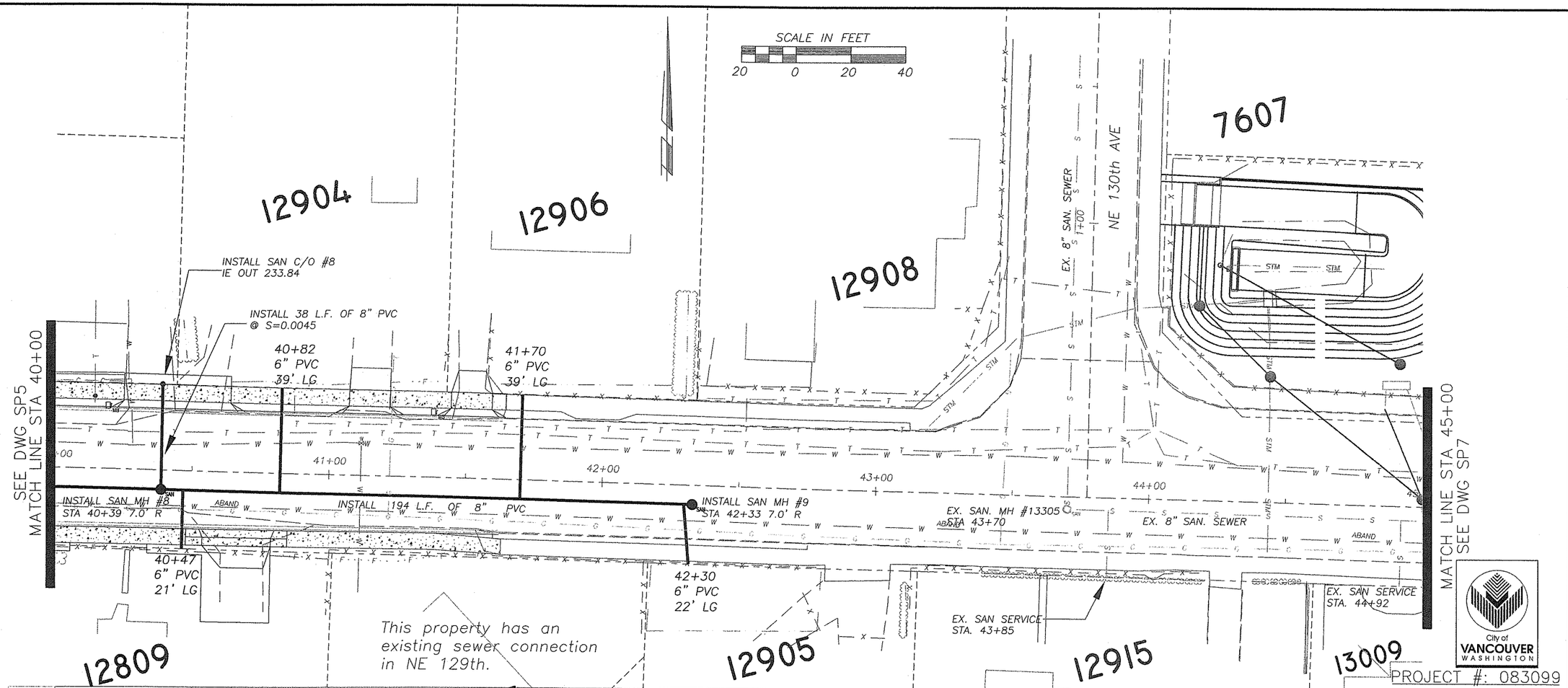

NOTE: Sewer lateral locations are approximate. Install 4-inch laterals at a 2% minimum slope, 6-foot minimum depth at the property line (unless specified otherwise). The exact location is subject to review and approval of the property owners.

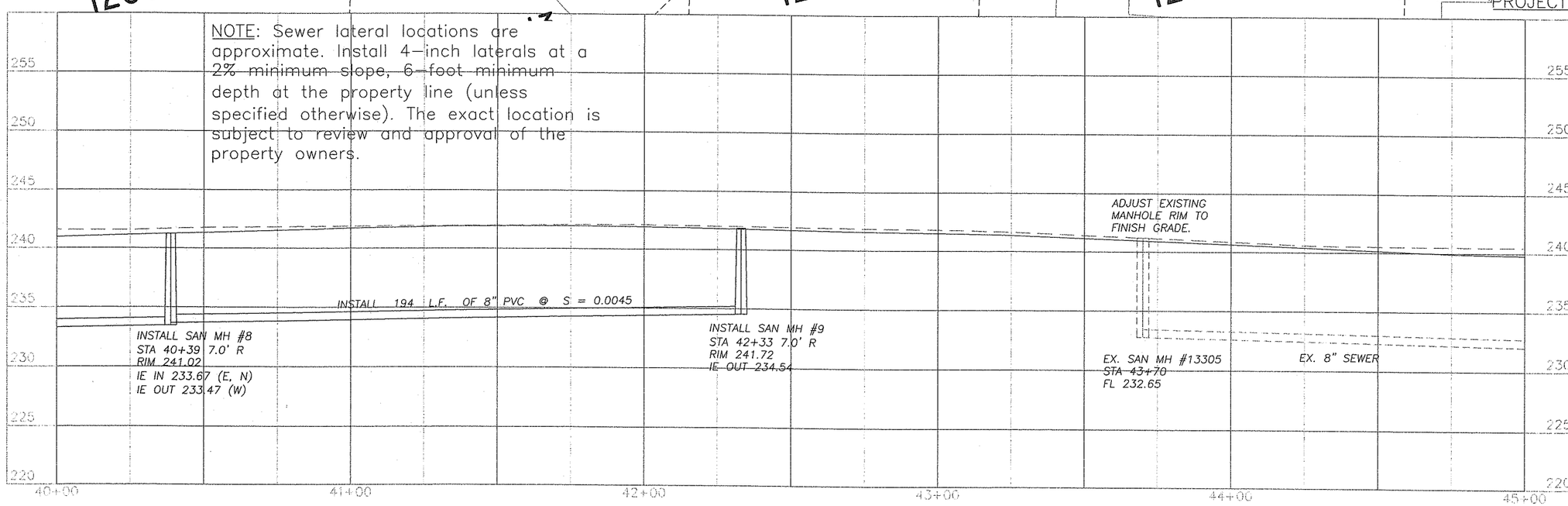

DESIGNED	KAO
DRAWN	KAO
CRP	311022
HOR.	1"=20'
VERT.	1"=5'
DATE	01/05/04
DWG:	SP6
SHEET 80	OF 93

CALL 48 HOURS BEFORE YOU DIG
1-800-553-4344
"It's the Law"
NORTHWEST UTILITIES NOTIFICATION CENTER

DONALD L. SKAGGS
STATE OF WASHINGTON
19374
REGISTERED PROFESSIONAL ENGINEER
EXPIRES FEB 4, 2005

DESIGN & ENGINEERING DIVISION
DESIGN SECTION

NE 76TH ST (SR-503 TO NE 147TH AVE)
SEWER PLAN STA 40+00 TO STA 45+00

proud past, promising future
CLARK COUNTY
WASHINGTON

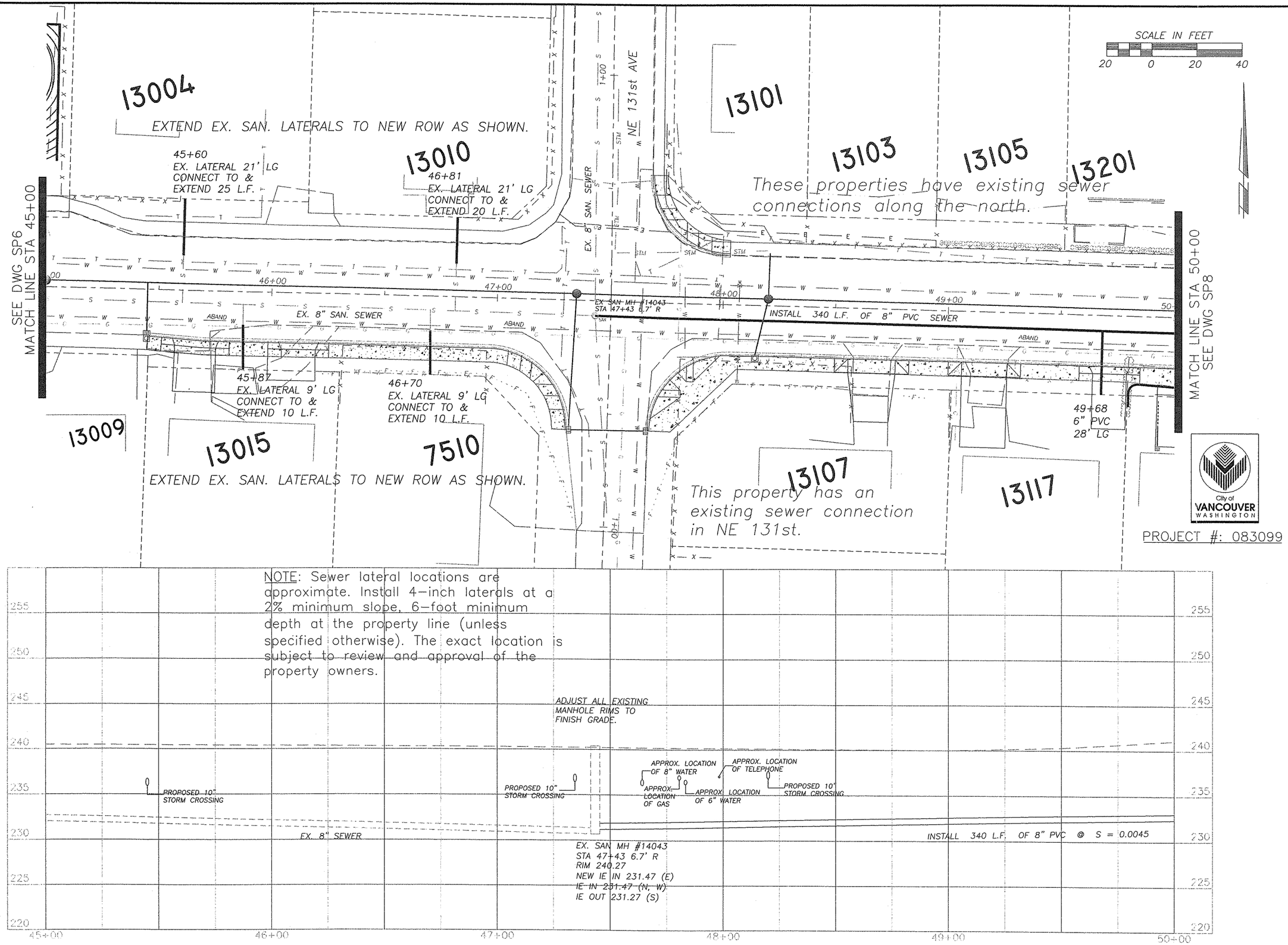

DESIGNED KAO
DRAWN KAO
CRP 311022
HOR. 1"=20'
VERT. 1"=5'
DATE 01/05/04
DWG: SP7
SHEET 81 OF 93

CALL 48 HOURS BEFORE YOU DIG
1-800-553-4344
"It's the Law"
NORTHWEST UTILITIES NOTIFICATION CENTER

DONALD L. SKAGGS
STATE OF WASHINGTON
PROFESSIONAL ENGINEER
EXPIRES FEB 4, 2005

DESIGN & ENGINEERING DIVISION
DESIGN SECTION

NE 76TH ST (SR-503 TO NE 147TH AVE)
SEWER PLAN STA 45+00 TO STA 50+00

proud past, promising future
CLARK COUNTY WASHINGTON

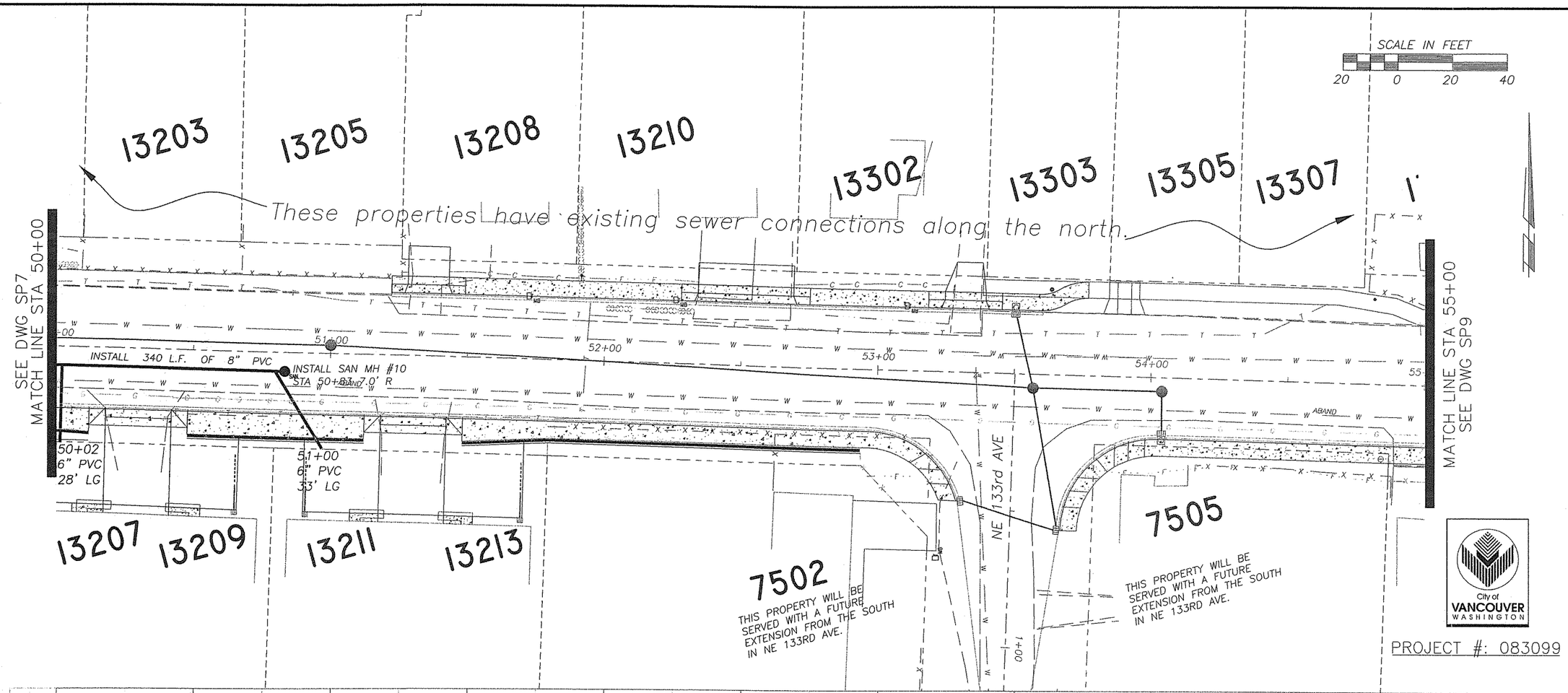

NOTE: Sewer lateral locations are approximate. Install 4-inch laterals at a 2% minimum slope, 6-foot minimum depth at the property line (unless specified otherwise). The exact location is subject to review and approval of the property owners.

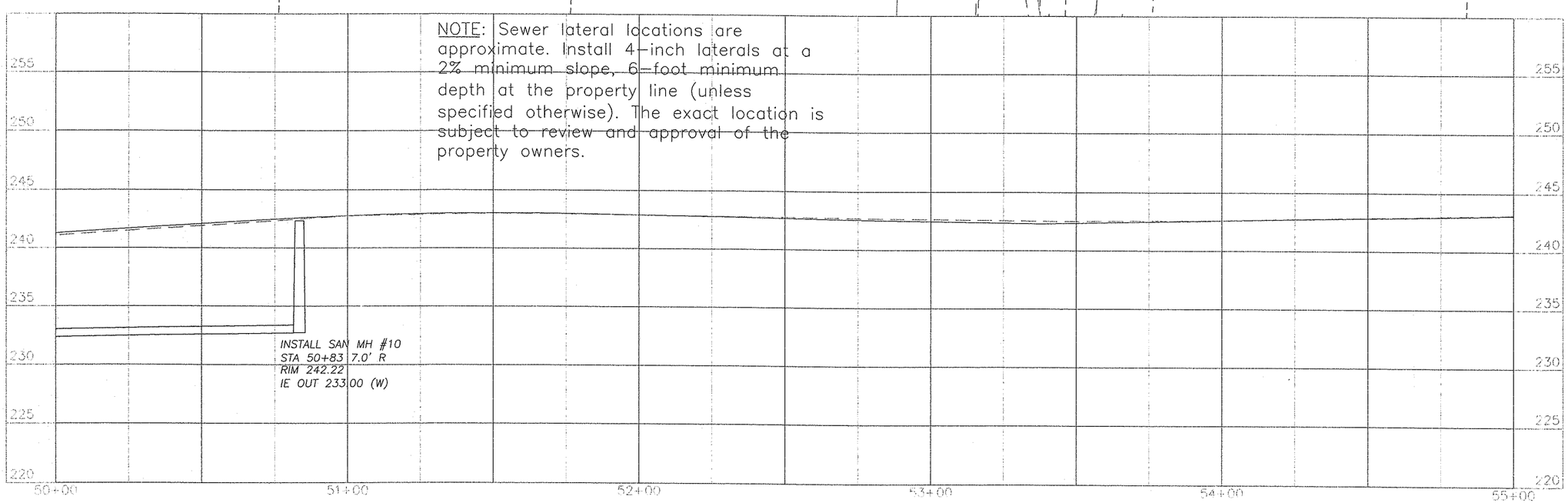

DESIGNED	KAO
DRAWN	KAO
CRP	311022
HOR.	1"=20'
VERT.	1"=5'
DATE	01/05/04
DWG:	SP8
SHEET 82	OF 93

CALL 48 HOURS BEFORE YOU DIG 1-800-553-4344 "It's the Law" NORTHWEST UTILITIES NOTIFICATION CENTER

DONALD L. SKAGGS STATE OF WASHINGTON 17787 REGISTERED PROFESSIONAL ENGINEER
EXPIRES FEB 4, 2005

DESIGN & ENGINEERING DIVISION
DESIGN SECTION

NE 76TH ST (SR-503 TO NE 147TH AVE)
SEWER PLAN STA 50+00 TO STA 55+00

proud past, promising future
CLARK COUNTY WASHINGTON

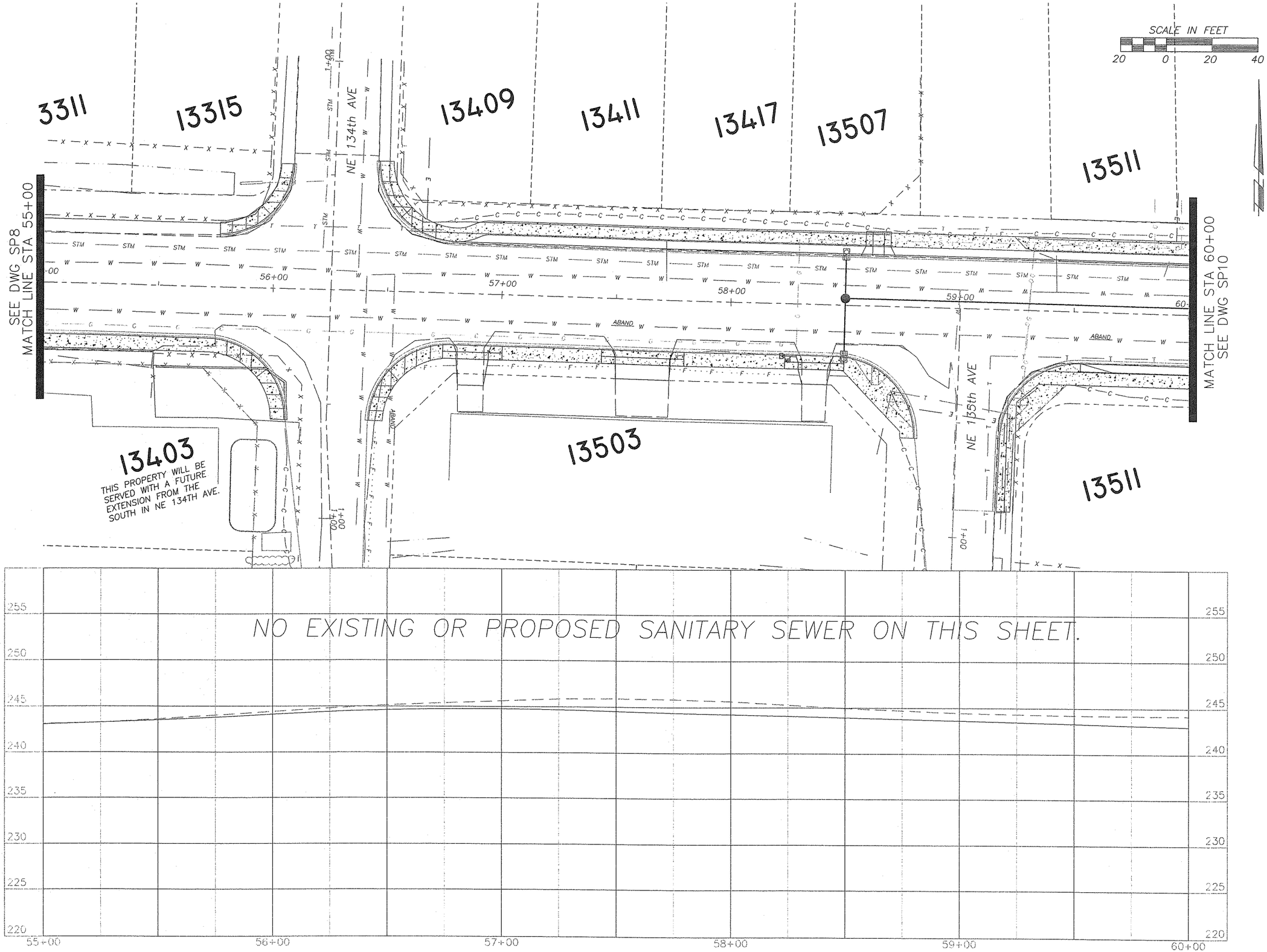

DESIGNED	KAO
DRAWN	KAO
CRP	311022
HOR.	1"=20'
VERT.	1"=5'
DATE	01/05/04
DWG:	SP9
SHEET 83	OF 93

CALL 48 HOURS BEFORE YOU DIG
1-800-553-4344
"It's the Law"
NORTHWEST UTILITIES NOTIFICATION CENTER

DESIGN & ENGINEERING DIVISION
DESIGN SECTION

NE 76TH ST (SR-503 TO NE 147TH AVE)
SEWER PLAN STA 55+00 TO STA 60+00

proud past, promising future
CLARK COUNTY
WASHINGTON

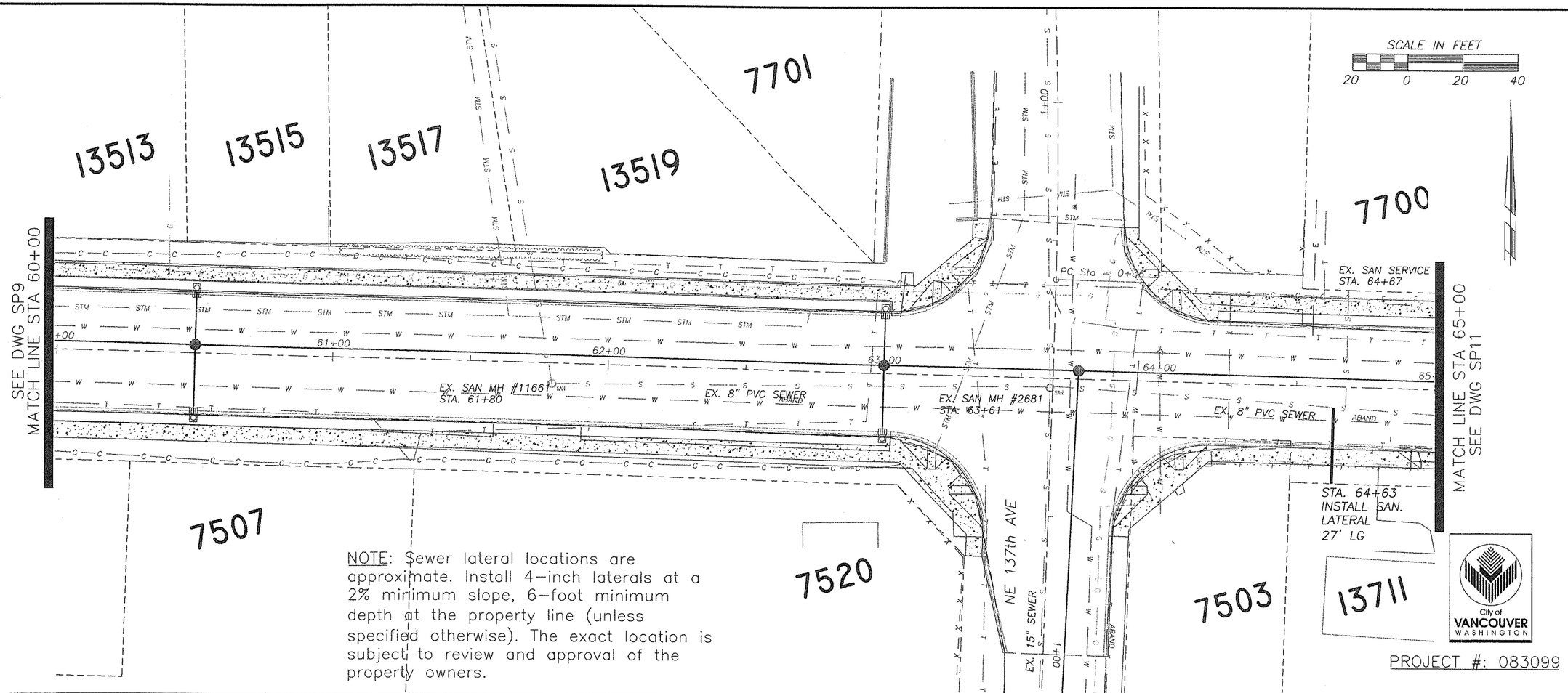

NOTE: Sewer lateral locations are approximate. Install 4-inch laterals at a 2% minimum slope, 6-foot minimum depth at the property line (unless specified otherwise). The exact location is subject to review and approval of the property owners.

PROJECT #: 083099

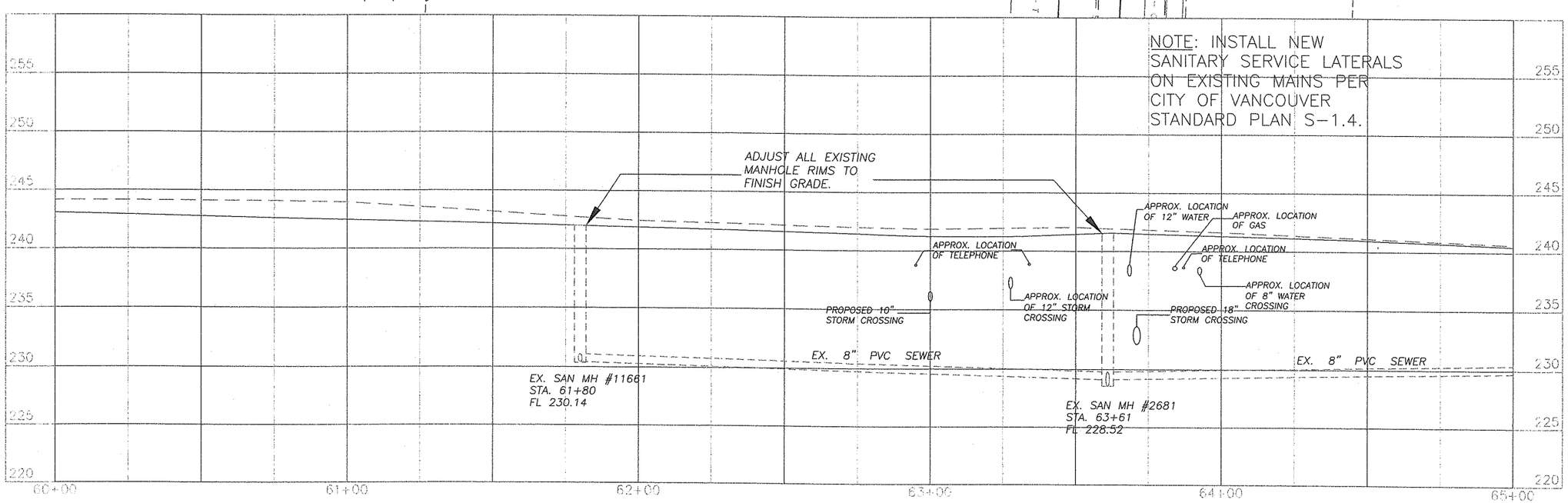

DESIGNED KAO
DRAWN KAO
CRP 311022
HOR. 1"=20'
VERT. 1"=5'
DATE 01/05/04
DWG: SP10
SHEET 84 OF 93

CALL 48 HOURS BEFORE YOU DIG
1-800-553-4344
"It's the Law"
NORTHWEST UTILITIES NOTIFICATION CENTER

DONALD L. SKAGGS
STATE OF WASHINGTON
EXPIRES FEB 4, 2005

DESIGN & ENGINEERING DIVISION
DESIGN SECTION

NE 76TH ST (SR-503 TO NE 147TH AVE)
SEWER PLAN STA 60+00 TO STA 65+00

proud past, promising future
CLARK COUNTY
WASHINGTON

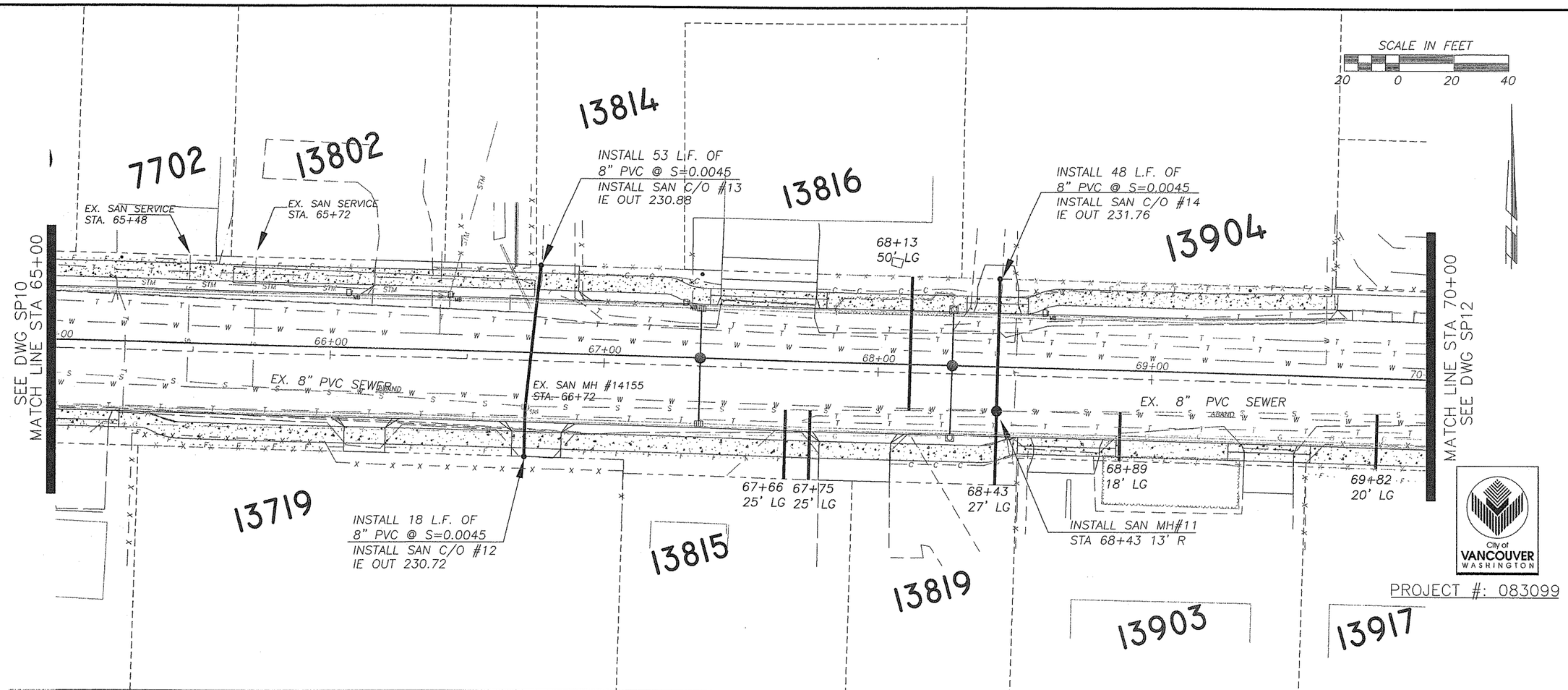

PROJECT #: 083099

NOTE: Sewer lateral locations are approximate. Install 4-inch laterals at a 2% minimum slope, 6-foot minimum depth at the property line (unless specified otherwise). The exact location is subject to review and approval of the property owners.

NOTE: INSTALL NEW SANITARY SERVICE LATERALS ON EXISTING MAINS PER CITY OF VANCOUVER STANDARD PLAN S-1.4.

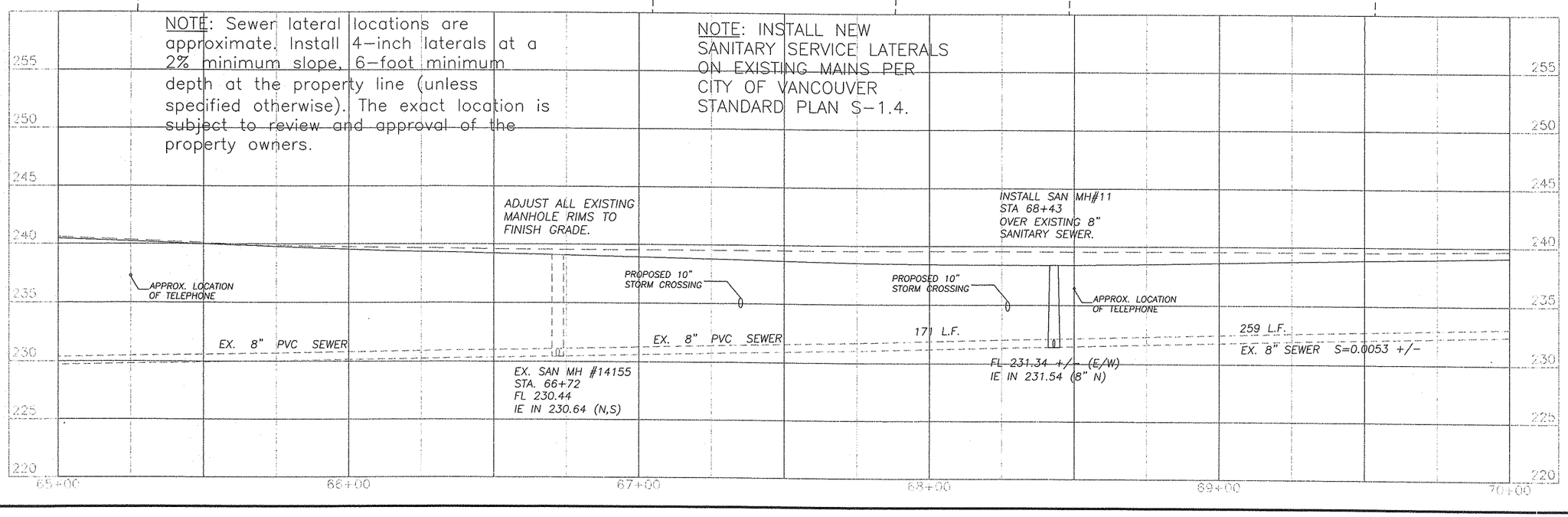

DESIGNED KAO
DRAWN KAO
CRP 311022
HOR. 1"=20'
VERT. 1"=5'
DATE 01/05/04
DWG: SP11
SHEET 85 OF 93

CALL 48 HOURS BEFORE YOU DIG
1-800-553-4344
"It's the Law"
NORTHWEST UTILITIES NOTIFICATION CENTER

DONALD O. SKAGGS
STATE OF WASHINGTON
REGISTERED PROFESSIONAL ENGINEER
EXPIRES FEB 4, 2005

DESIGN & ENGINEERING DIVISION
DESIGN SECTION

NE 76TH ST (SR-503 TO NE 147TH AVE)
SEWER PLAN STA 65+00 TO STA 70+00

proud past, promising future
CLARK COUNTY
WASHINGTON

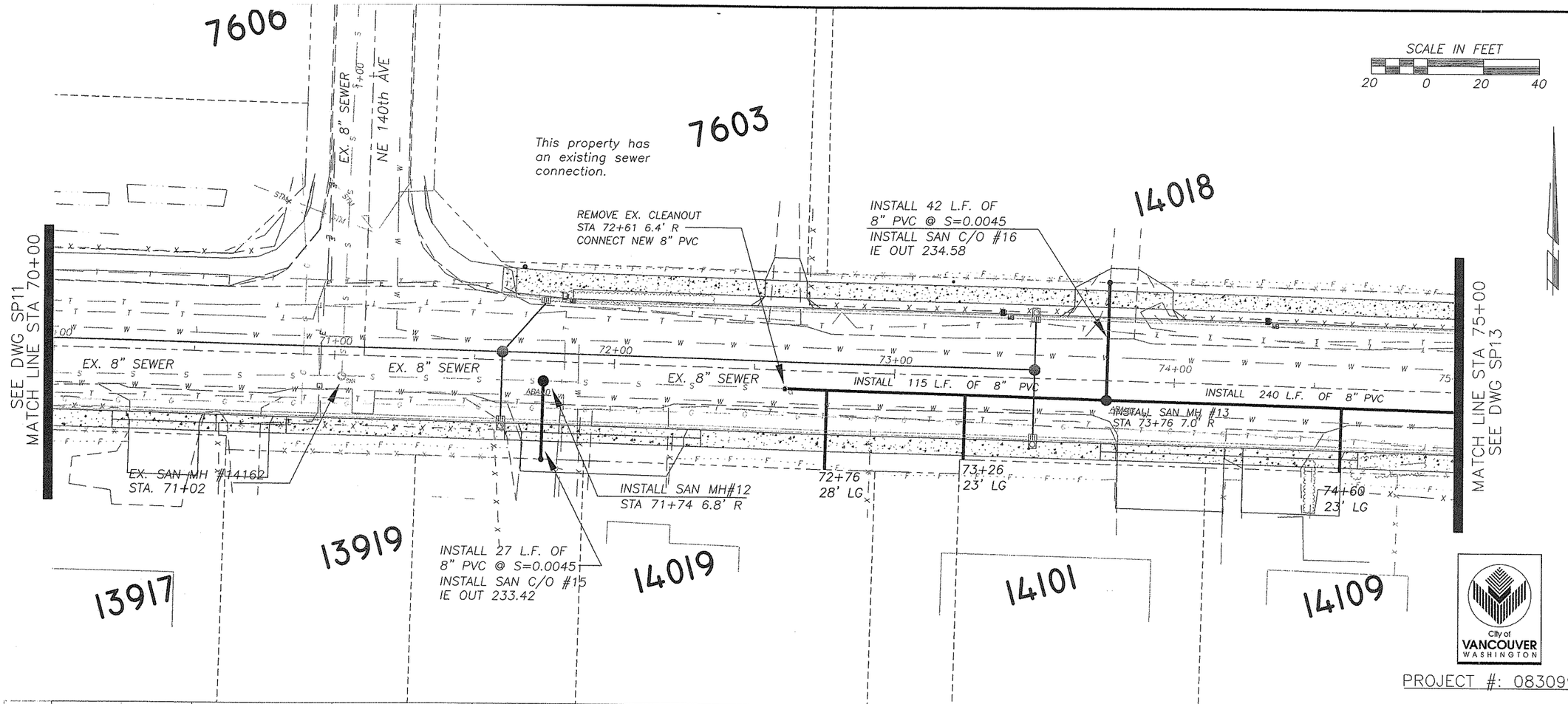

PROJECT #: 083099

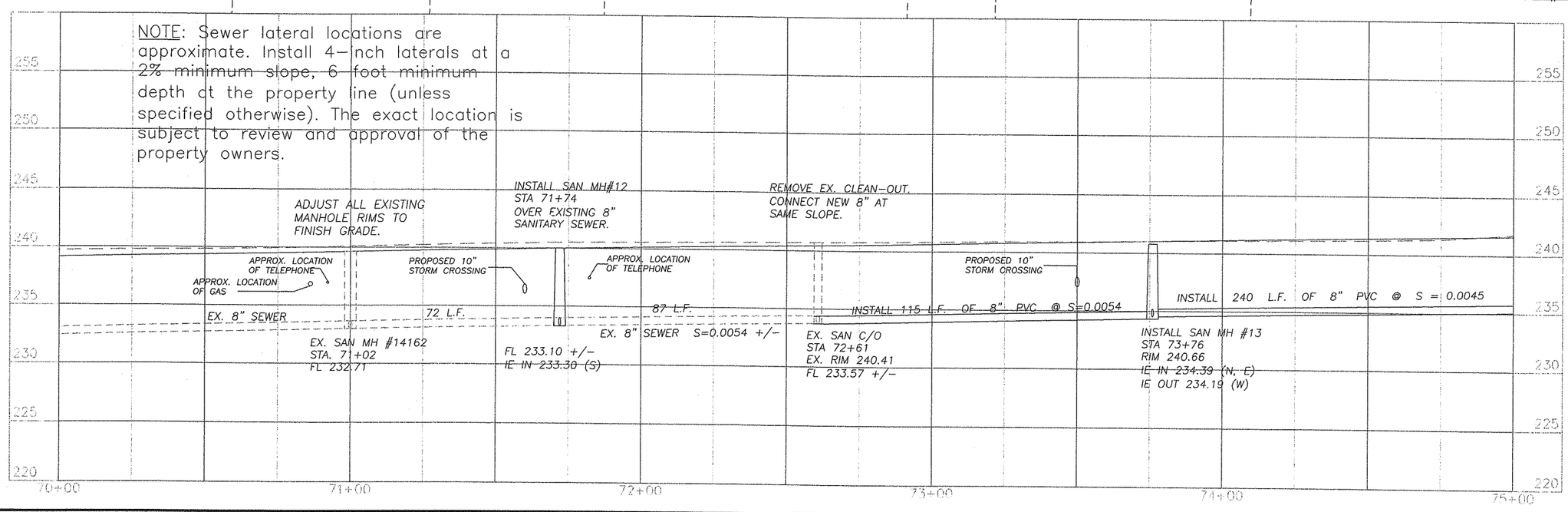

DESIGNED KAO
DRAWN KAO
CRP 311022
HOR. 1"=20'
VERT. 1"=5'
DATE 01/05/04
DWG: SP12
SHEET 86 OF 93

CALL 48 HOURS BEFORE YOU DIG 1-800-553-4344 "It's the Law" NORTHWEST UTILITIES NOTIFICATION CENTER

DONALD L. SKAGGS STATE OF WASHINGTON 19951 REGISTERED PROFESSIONAL ENGINEER
EXPIRES FEB 4, 2005

DESIGN & ENGINEERING DIVISION
DESIGN SECTION

NE 76TH ST (SR-503 TO NE 147TH AVE)
SEWER PLAN STA 70+00 TO STA 75+00

City of VANCOUVER WASHINGTON

proud past, promising future
CLARK COUNTY WASHINGTON

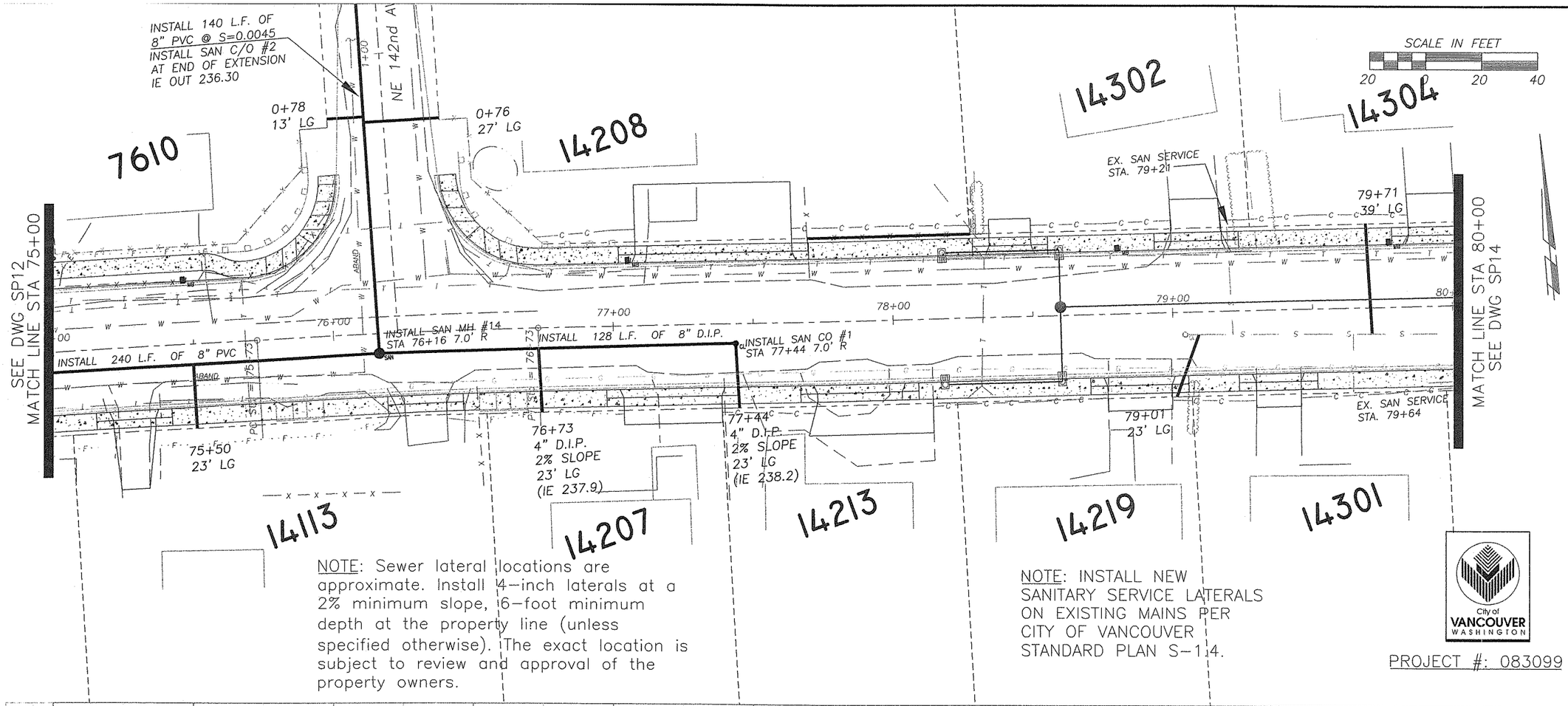

NOTE: Sewer lateral locations are approximate. Install 4-inch laterals at a 2% minimum slope, 6-foot minimum depth at the property line (unless specified otherwise). The exact location is subject to review and approval of the property owners.

NOTE: INSTALL NEW SANITARY SERVICE LATERALS ON EXISTING MAINS PER CITY OF VANCOUVER STANDARD PLAN S-1.4.

City of VANCOUVER WASHINGTON

PROJECT #: 083099

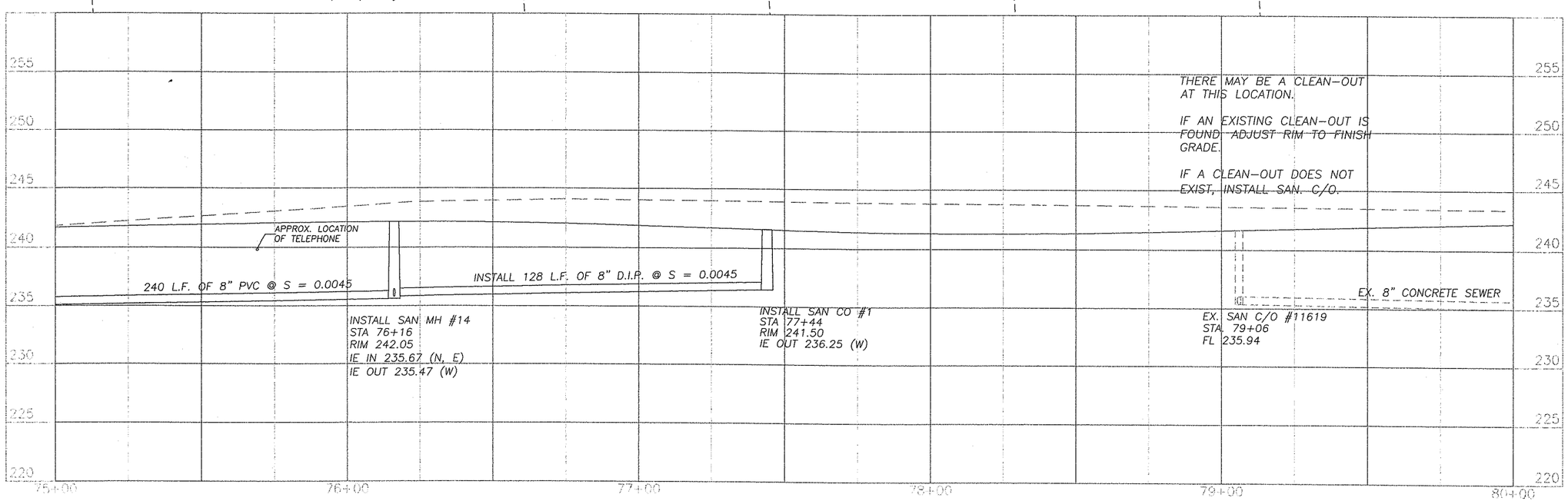

DESIGNED KAO
DRAWN KAO
CRP 311022
HOR. 1"=20'
VERT. 1"=5'
DATE 01/05/04
DWG: SP13
SHEET 87 OF 93

CALL 48 HOURS BEFORE YOU DIG
1-800-553-4344
"It's the Law"
NORTHWEST UTILITIES NOTIFICATION CENTER

DONALD L. SLAGGS
STATE OF WASHINGTON
19351
REGISTERED PROFESSIONAL ENGINEER
EXPIRES FEB 4, 2005

DESIGN & ENGINEERING DIVISION
DESIGN SECTION

NE 76TH ST (SR-503 TO NE 147TH AVE)
SEWER PLAN STA 75+00 TO STA 80+00

proud past, promising future
CLARK COUNTY WASHINGTON

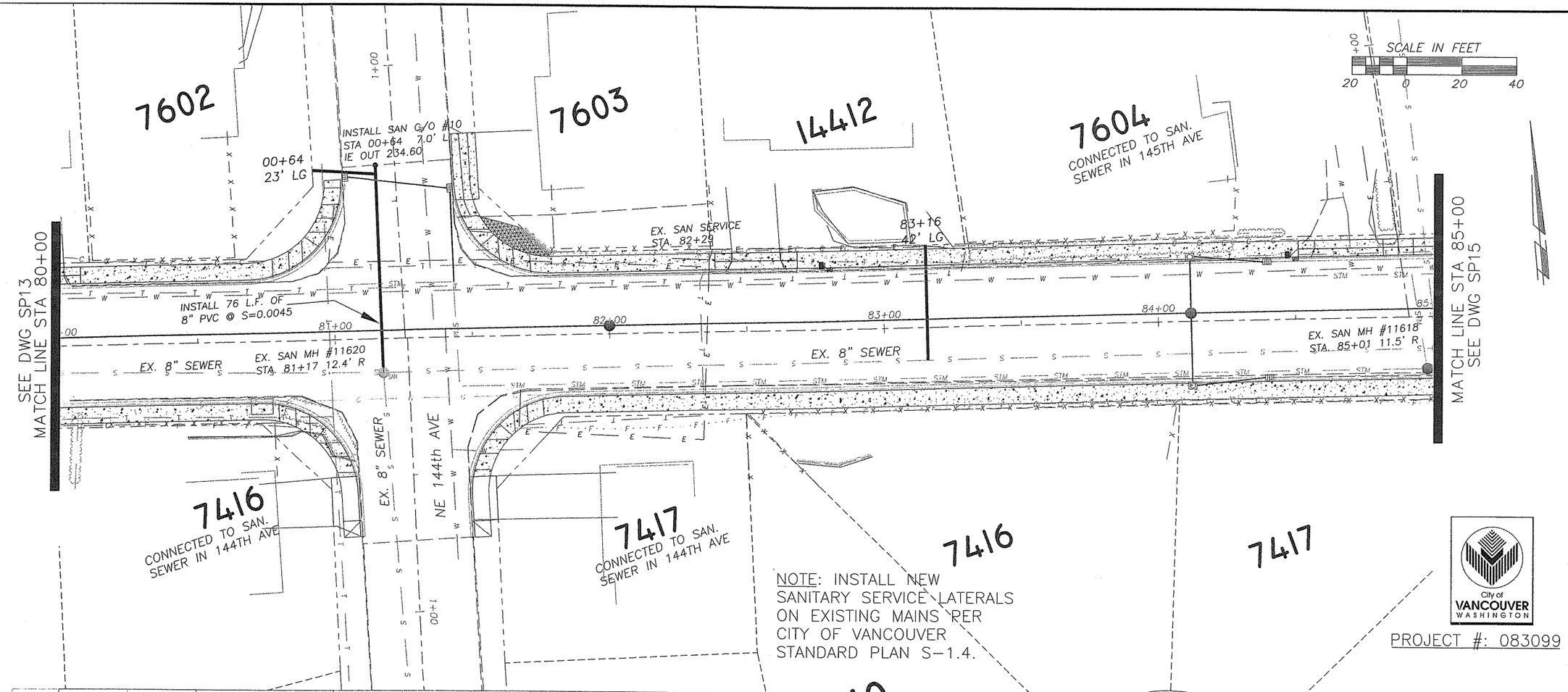

DESIGNED KAO
DRAWN KAO
CRP 311022
HOR. 1"=20'
VERT. 1"=5'
DATE 01/05/04
DWG: SP14
SHEET 88 OF 93

CALL 48 HOURS BEFORE YOU DIG
1-800-553-4344
"It's the Law"
NORTHWEST UTILITIES NOTIFICATION CENTER

DONALD L. SKAGGS
STATE OF WASHINGTON
17951
REGISTERED PROFESSIONAL ENGINEER
EXPIRES FEB 4, 2005

DESIGN & ENGINEERING DIVISION
DESIGN SECTION

NE 76TH ST (SR-503 TO NE 147TH AVE)
SEWER PLAN STA 80+00 TO STA 85+00

proud past, promising future
CLARK COUNTY WASHINGTON

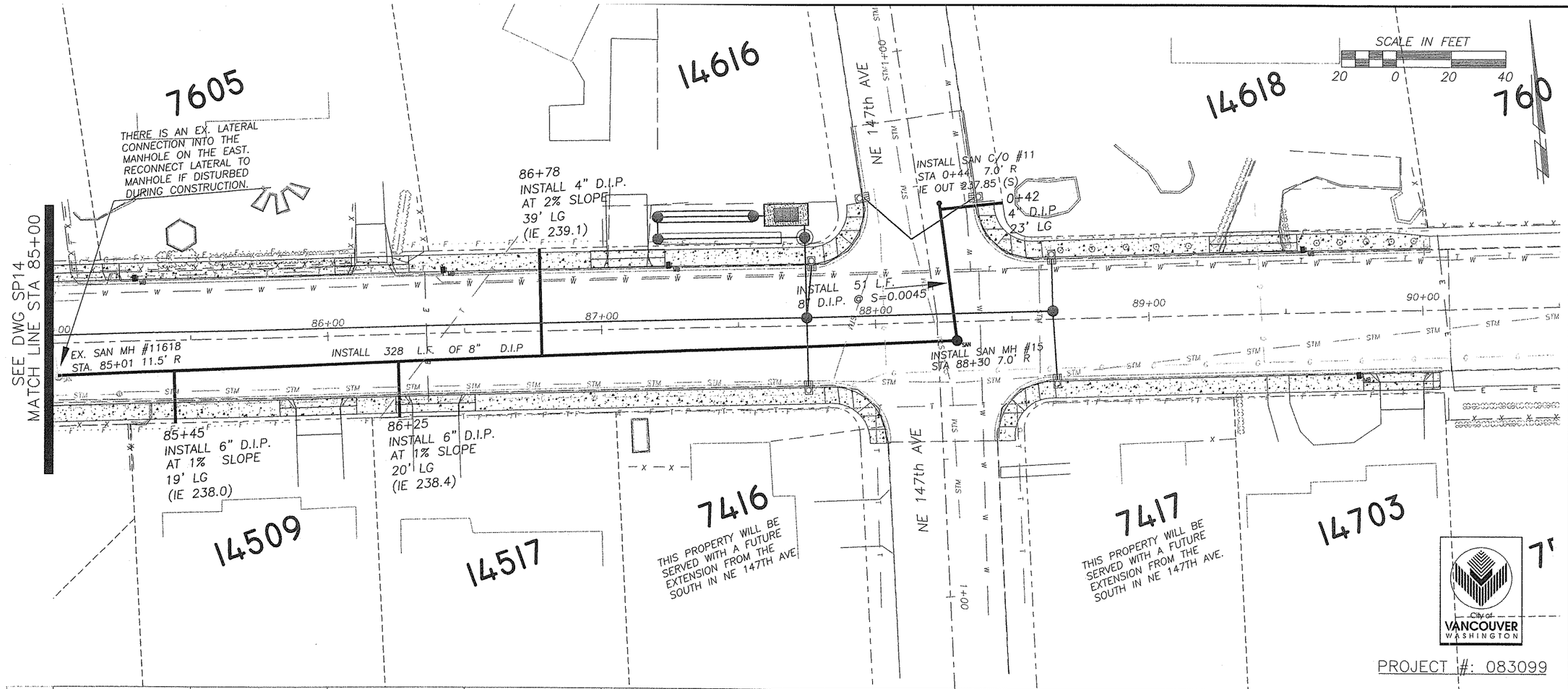

PROJECT #: 083099

NOTE: Sewer lateral locations are approximate. Install 4-inch laterals at a 2% minimum slope, 6-foot minimum depth at the property line (unless specified otherwise). The exact location is subject to review and approval of the property owners.

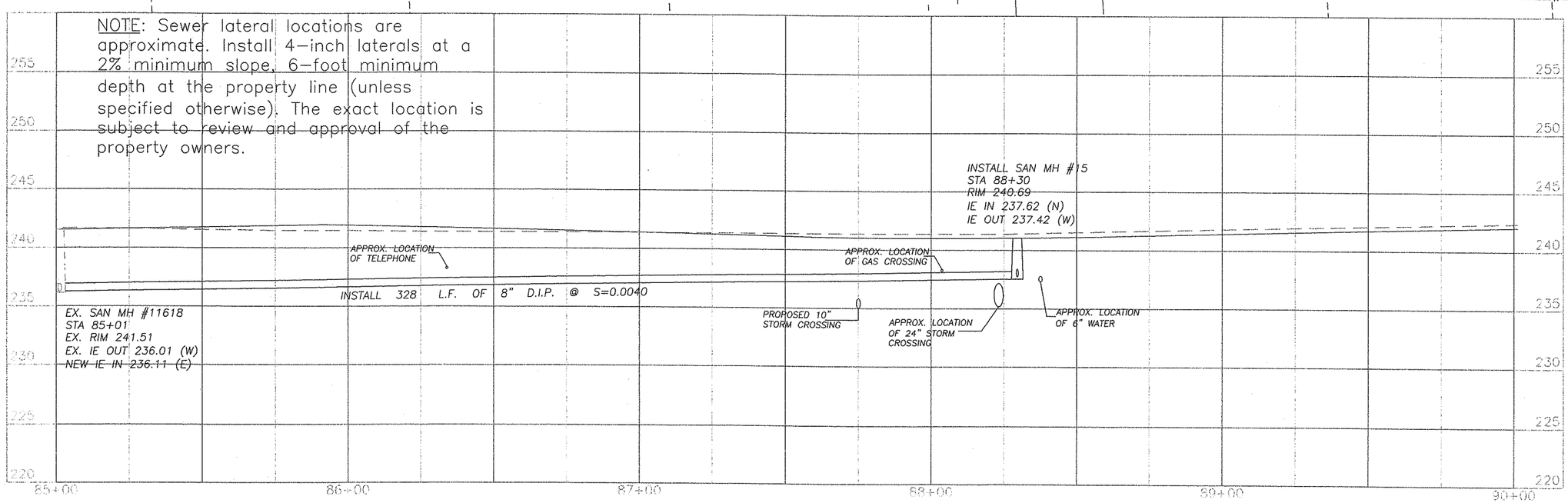

DESIGNED	KAO
DRAWN	KAO
CRP	311022
HOR.	1"=20'
VERT.	1"=5'
DATE	01/05/04
DWG.	SP15
SHEET 89	OF 93

CALL 48 HOURS BEFORE YOU DIG 1-800-553-4344 "It's the Law" NORTHWEST UTILITIES NOTIFICATION CENTER

DONALD L. SKAGGS STATE OF WASHINGTON 19351 REGISTERED PROFESSIONAL ENGINEER
EXPIRES FEB 4, 2005

DESIGN & ENGINEERING DIVISION
DESIGN SECTION

NE 76TH ST (SR-503 TO NE 147TH AVE)
SEWER PLAN STA 85+00 TO STA 90+00

proud past, promising future
CLARK COUNTY WASHINGTON

1. All materials and installation of sanitary sewers shall be in conformance with the 2000 edition of the Standard Specifications for Road, Bridge, and Municipal Construction, hereinafter referred to as the "Standard Specifications", prepared by the Washington State Chapter of the American Public Works Association (APWA) and the Washington State Department of Transportation, except as noted herein or on the standard plans. Wherever the standard specifications refer to the owner as either the "State" or "Secretary" or when reference is made to the Department of Transportation it shall be understood that the standard specifications should read the "City".

2. All sanitary sewer construction is subject to inspection and approval by the City of Vancouver's Department of Public Works. The contractor shall notify the Construction Office (360-696-8019) at least 48 hours prior to the start of construction. The city may require that a preconstruction conference be held.

3. The contractor is required to notify all utilities 48 hours prior to commencement of work. The contractor may contact the Northwest Utility Notification Center at 1-800-553-4344 in lieu of contacting individual utilities.

4. Final acceptance of sanitary sewers are subject to Sections 1-05.11, 1-05.12, 7-17.3(2)E, 7-17.3(2)F, 7-17.3(2)G and 7-17.3(2)H of the Standard Specifications. Television inspection shall include video of all manholes in addition to the pipe. This may be done with either a hand held video camera or use of a pan and tilt video camera. The contractor shall guarantee all work done under city contract for a period of three (3) years as per of the City of Vancouver General Provisions for Municipal Construction.

5. Local variations in slope (i.e. "bellies") must be no more than 1/2" in 8-inch pipe, 3/4" in a 10-inch pipe, and 1" in pipes 12-inches or greater in diameter. Variations in excess of these tolerances must be repaired at the Contractor's expense to the satisfaction of the City.

6. All pipe and fittings shall conform to the following:
A. Concrete pipe, non-reinforced, shall conform to ASTM C 14, Class 2, except as otherwise noted. Concrete pipe, reinforced, shall conform to ASTM C 76, and shall be of the class noted on the plans or in the special provisions.
B. Polyvinyl chloride (PVC) sewer pipe 15" diameter or less shall conform to ASTM D3034, SDR 35. It shall have a minimum pipe stiffness of 46 psi. PVC pipe 18" diameter shall conform to ASTM F 679. All PVC pipe shall have an integral bell gasketed joint with elastomeric gasket and shall be furnished in 12-1/2 foot laying lengths.
C. Ductile Iron (DI) pipe shall conform to ANSI A21.51 or AWWA C151, with push-on joints, Class 52, unless otherwise noted.

7. Installation of pipe and manholes shall conform to the following:
A. Concrete pipe shall be installed in conformance with standard plans S-1.1 (Class C, unless otherwise noted) and S-1.3.
B. PVC pipe shall be installed in accordance with manufacturer's recommendations and shall conform to standard plans S-1.2 and S-1.3.
C. Manholes shall conform with standard plans S-2.1 through S-2.9.

8. Manholes, cleanouts, service lateral connections, trench excavation, pipe bedding and street restoration, and appurtenances shall conform to the details shown on the standard plans. All other construction shall conform to the standard details contained in the Standard Plans For Road, Bridge and Municipal Construction.

9. The contractor shall comply with the provisions of all permits issued, or easements granted to the city in conjunction with the construction of sanitary sewers. The contractor shall obtain a street cut permit for work within the public right-of-way.

10. The contractor shall submit an approved traffic control plan. Inside the city this plan shall be approved by the Transportation Division (360-696-8230) and outside the city it shall be approved by the Clark County Traffic Engineer (360-397-6118, ext. 4944). Approval shall be obtained prior to beginning construction.

CONSTRUCTION SPECIFICATIONS FOR SANITARY SEWER
Division 7

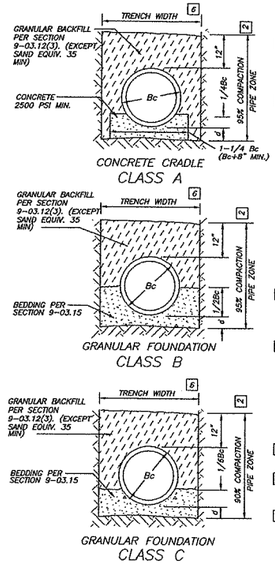

NOTES

1. WHERE DIRECTED BY THE ENGINEER GRANULAR TRENCH FOUNDATION STABILIZATION SHALL BE PLACED PRIOR TO PLACEMENT OF THE BEDDING. SIZE AND DEPTH ARE DEPENDENT ON SOIL CONDITIONS.
2. BEDDING AND BACKFILL MATERIALS IN THE PIPE ZONE SHALL BE COMPACTED AS SPECIFIED PRIOR TO BACKFILLING THE REMAINDER OF THE TRENCH.

LEDGEND:
Bc = OUTSIDE DIAMETER
D = INSIDE DIAMETER
d = DEPTH OF BEDDING MATERIAL BELOW PIPE

DEPTH OF BEDDING MATERIAL BELOW PIPE	
D	d (min) 3
27" & SMALLER	4"
LARGER THAN 27"	6"

3. FOR ROCK AND OTHER INCOMPRESSIBLE MATERIALS, THE TRENCH SHALL BE OVER-EXCAVATED A MINIMUM OF 6" AND RE-FILLED WITH GRANULAR MATERIAL AS DIRECTED BY THE ENGINEER.
4. NATIVE MATERIAL MAY BE USED IN LIEU OF IMPORTED MATERIAL FOR BEDDING SPECIFIED, PROVIDED THAT THE NATIVE MATERIAL CONFORMS TO SECTION 9-03.15 OF THE STD. SPECIFICATIONS, AND IS APPROVED BY THE ENGINEER. THE CONTACTOR SHALL SUBMIT A SAMPLE OF THE NATIVE MATERIAL TO THE ENGINEER AT LEASE 72 HOURS PRIOR TO USE. THE ENGINEER MAY APPROVE, REJECT OR REQUIRE LABORATORY TESTING OF THE MATERIAL.
5. BACKFILL AND COMPACTION ABOVE THE PIPE ZONE SHALL BE AS SHOWN IN STD. PLAN S-1.3
6. TRENCH WIDTH SHALL NOT EXCEED ONE AND ONE-HALF THE INSIDE DIAMETER OF THE PIPE PLUS 18" AT THE TOP OF THE PIPE ZONE.
7. FOR FLEXIBLE PIPE BEDDING SEE STD. PLAN S-1.2

STANDARD PIPE BEDDING (RIGID PIPE)
S-1.1

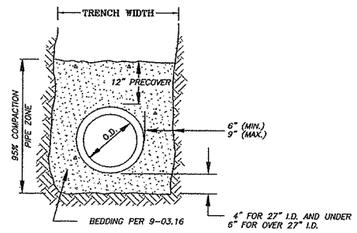

NOTES:

1. WHERE DIRECTED BY THE ENGINEER, GRANULAR TRENCH FOUNDATION STABILIZATION SHALL BE PLACED PRIOR TO PLACEMENT OF THE BEDDING. SIZE AND DEPTH ARE DEPENDENT ON SOIL CONDITIONS.
2. BEDDING AND BACKFILL MATERIALS IN THE PIPE ZONE SHALL BE COMPACTED AS SPECIFIED PRIOR TO BACKFILLING THE REMAINDER OF THE TRENCH.
3. FOR ROCK AND OTHER INCOMPRESSIBLE MATERIALS, THE TRENCH SHALL BE OVEREXCAVATED A MINIMUM OF 6" AND REFILLED WITH GRANULAR MATERIALS AS DIRECTED BY THE ENGINEER.
4. BACK FILL AND COMPACTION ABOVE THE PIPE ZONE SHALL BE AS SHOWN IN STANDARD PLAN NO. S-1.3.
5. INSTALLATION SHALL CONFORM TO UNIBELL PLASTIC PIPE ASSN. STANDARD SPEC. UNI-B-5 (LATEST EDITION) EXCEPT AS NOTED.
6. FINAL INSTALLATION TO BE TESTED PER SECTION 7-17.3(2)G OF THE STANDARD SPECIFICATIONS .
7. ALTERNATIVE PRE-COVER MATERIALS ARE ALLOWABLE FROM PIPE CENTERLINE TO ONE FOOT ABOVE THE TOP OF PIPE. ALTERNATE PRE-COVER MATERIALS MUST BE PREAPPROVED BY THE INSPECTOR AND MAY BE SAND, CRUSHER SCREENINGS, GRAVEL, OR OTHER CLEAN GRANULAR MATERIAL CONTAINING NO ROCK LARGER THAN 1-1/4" IN LENGTH.

APPROVAL FOR SUCH ALTERNATE MATERIALS WILL BE GRANTED UPON CONFIRMATION BY TEST OF ITS COMPLIANCE WITH THESE REQUIREMENTS. SUBMIT 50 LB. SAMPLE FOR TESTING TO THE CITY INSPECTOR, AND OBTAIN APPROVAL OF MATERIAL PRIOR TO STARTING PIPE INSTALLATION WORK. THE TEST REQUIRES A MINIMUM OF FIVE BUSINESS DAYS TO COMPLETE.

STANDARD PIPE BEDDING (FLEXIBLE PIPE)
S-1.2

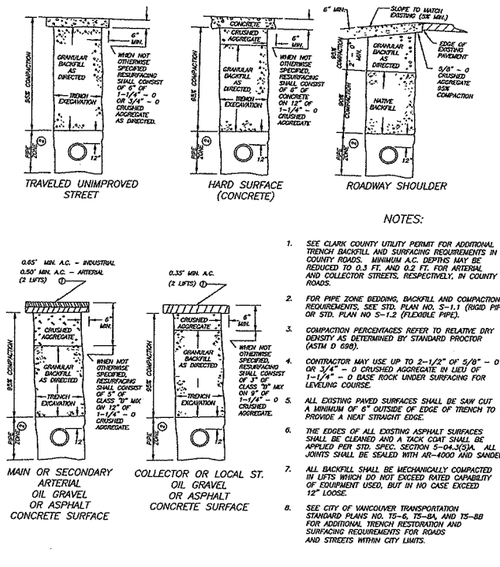

NOTES:

1. SEE CLARK COUNTY UTILITY PERMIT FOR ADDITIONAL TRENCH BACKFILL AND SURFACING REQUIREMENTS IN COUNTY ROADS. MINIMUM A.C. DEPTHS MAY BE REDUCED TO 0.3 FT. AND 0.2 FT. FOR ARTERIAL AND COLLECTOR STREETS, RESPECTIVELY, IN COUNTY ROADS.
2. FOR PIPE ZONE BEDDING, BACKFILL AND COMPACTION REQUIREMENTS, SEE STD. PLAN NO. S-1.1 (RIGID PIPE) OR STD. PLAN NO S-1.2 (FLEXIBLE PIPE).
3. COMPACTION PERCENTAGES REFER TO RELATIVE DRY DENSITY AS DETERMINED BY STANDARD PROCTOR (ASTM D 698).
4. CONTRACTOR MAY USE UP TO 2-1/2" OF 5/8" - 0 OR 1/4" - 0 CRUSHED AGGREGATE IN LIEU OF 1-1/4" - 0 BASE ROCK UNDER SURFACING FOR LEVELING COURSE.
5. ALL EXISTING PAVED SURFACES SHALL BE SAW CUT A MINIMUM OF 6" OUTSIDE OF EDGE OF TRENCH TO PROVIDE A NEAT STRAIGHT EDGE.
6. THE EDGES OF ALL EXISTING ASPHALT SURFACES SHALL BE CLEANED AND A TACK COAT SHALL BE APPLIED PER STD. SPEC. SECTION 5-04.3(3)A. ALL JOINTS SHALL BE SEALED WITH AR-4000 AND SANDED.
7. ALL BACKFILL SHALL BE MECHANICALLY COMPACTED IN LIFTS WHICH DO NOT EXCEED RATED CAPABILITY OF EQUIPMENT USED, BUT IN NO CASE EXCEED 12" LOOSE.
8. SEE CITY OF VANCOUVER TRANSPORTATION STANDARD PLANS NO. TS-6, TS-8A, AND TS-8B FOR ADDITIONAL TRENCH RESTORATION AND SURFACING REQUIREMENTS FOR ROADS AND STREETS WITHIN CITY LIMITS.

TYPICAL TRENCH SECTIONS: BACKFILL, BEDDING & SURFACING
S-1.3

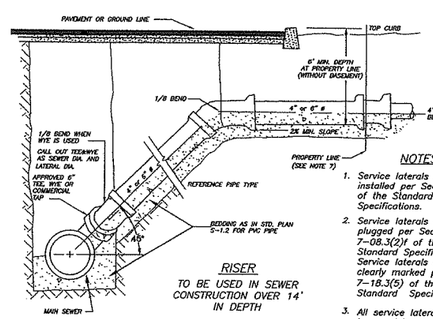

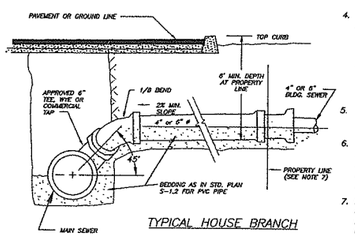

NOTES

1. Service laterals shall be installed per Section 7.08.3 of the Standard Specifications.
2. Service laterals shall be plugged per Section 7-08.3(2)f of the Standard Specifications. Service laterals shall be clearly marked per Section 7-18.3(5) of the Standard Specifications.
3. All service laterals shall be a minimum of 6-inches in diameter, except for single family lots which may be 4-inch.
4. Approved commercial taps:
   - SEALTIGHT® TYPE "C" OR "D" SEWER SADDLE.
   - FOWLER QUIK-WAY® SEWER TAP.
   - FOWLER "T & L"® SEWER TEE.
   - FOWLER "INSERTA TEE"®
   - "TAP-TITE"® SEWER TEE.
5. Service laterals connecting to ductile iron pipe shall also be ductile iron.
6. Transitions between dissimilar pipe materials or sizes shall be made with approved adaptors (Fernco, Caulder or equal).
7. In new subdivisions and other construction involving new roads, install laterals to 6 feet behind property line for sewers in street Right-of-Way.

SERVICE LATERAL CONNECTIONS
S-1.4

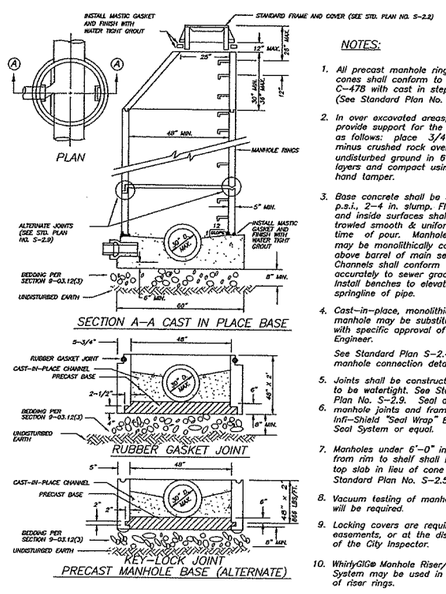

NOTES:

1. All precast manhole rings and cones shall conform to ASTM C-478 with cast in steps. (See Standard Plan No. S-2.3)
2. In over excavated areas, provide support for the pipe as follows: place 3/4" minus crushed rock over undisturbed ground in 6" layers and compact using hand tamper.
3. Base concrete shall be 3,000 p.s.i., 2-4 in. slump. Flow lines and inside surfaces shall be trowled smooth & uniform at time of pour. Manhole base may be monolithically cast to 8" above barrel of main sewer. Channels shall conform accurately to sewer grade. Install benches to elevation of springline of pipe.
4. Cast-in-place, monolithic manhole may be substituted with specific approval of the Engineer.

   See Standard Plan S-2.4 for manhole connection details.
5. Joints shall be constructed so as to be watertight. See Standard Plan No. S-2.9. Seal all
6. manhole joints and frame with Inf-Shield "Seal Wrap" Exterior Seal System or equal.
7. Manholes under 6'-0" in depth from rim to shelf shall have a top slab in lieu of cone (See Standard Plan No. S-2.5).
8. Vacuum testing of manholes will be required.
9. Locking covers are required in easements, or at the discretion of the City Inspector.
10. WhirlyGIG® Manhole Riser/Collar System may be used in place of riser rings.

STANDARD PRECAST MANHOLE
S-2.1

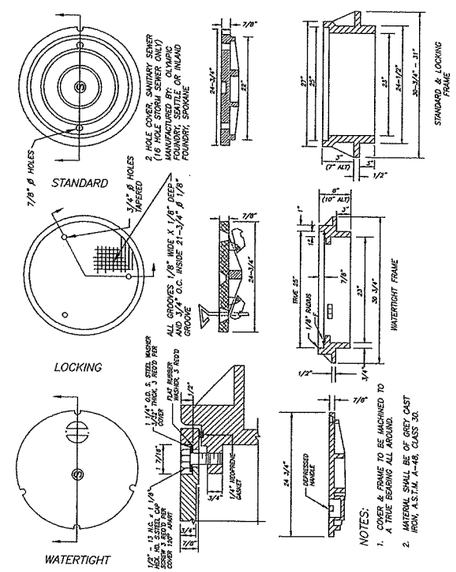

STANDARD MANHOLE FRAMES & COVERS
S-2.2

LANE INTERNATIONAL CORPORATION POLYPROPYLENE MANHOLE SAFETY STEP P-14850 WITH REFLECTORS.

NOTES:

All steps must meet ASTM C-478 and AASHTO M-199 Specifications, polypropylene ASTM D-4104, the 1/2" Grade 60 deformed reinforcing bar ASTM-A--615.

Installation method must resist 1,500 lb. horizontal pull out force and 500 lb. vertical load.

Locate steps over bench whenever possible (not over the main).

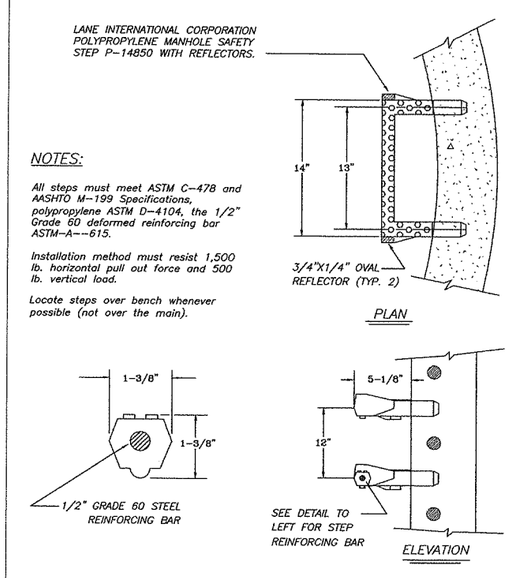

STANDARD MANHOLE STEPS
S-2.3

CALL 48 HOURS BEFORE YOU DIG
1-800-553-4344
"It's the Law"
NORTHWEST UTILITY NOTIFICATION CENTER

DESIGNED	BAK
DRAWN	BAK
CRP	311022
HOR.	1"=20'
VERT.	NA
DATE	1/16/04
DWG:	SD1
SHEET 90 OF 93	

REVISIONS

DATE	By	APPRV.

CITY OF VANCOUVER WASHINGTON

SANITARY SYSTEM PLANNING & DESIGN
P.O. BOX 1995
VANCOUVER, WA 98668-1995
(360) 696-8020
FAX (360) 696-8450
www.ci.vancouver.wa.us

STANDARD SEWER MAIN DETAILS
SHEET 1

Approved By: May 27, 2002
CITY ENGINEER DATE

SHEET OF

DESIGN & ENGINEERING DIVISION
DESIGN SECTION

NE 76TH ST (SR-503 TO NE 147TH AVE)
SEWER DETAIL #1

proud past, promising future
CLARK COUNTY WASHINGTON

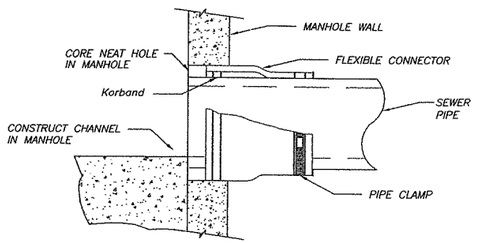

NOTES:

1. CONNECTIONS TO MANHOLE SHALL BE MADE WITH AN APPROVED EXPANSION TYPE RUBBER BOOT; KOR-N-SEAL® OR SEALTITE®, (NO FLEX JOINT REQUIRED), FOR ALL PIPES UP TO 18". LARGER PIPES WILL BE HANDLED ON A CASE-BY-CASE BASIS.
2. CORE NEAT HOLE IN MANHOLE AND INSTALL BOOT AS REQUIRED PER MANUFACTURER'S SPECIFICATIONS.
3. STUB-OUTS INSTALLED FOR FUTURE EXTENSIONS ARE TO BE PLUGGED AT BOTH ENDS.

STANDARD MANHOLE CONNECTION DETAIL
S-2.4

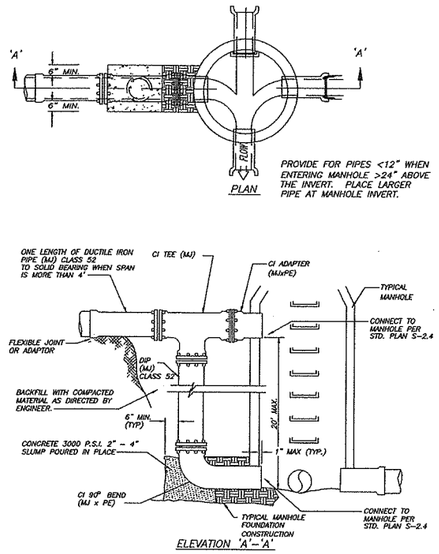

OUTSIDE DROP CONNECTION
S-2.6

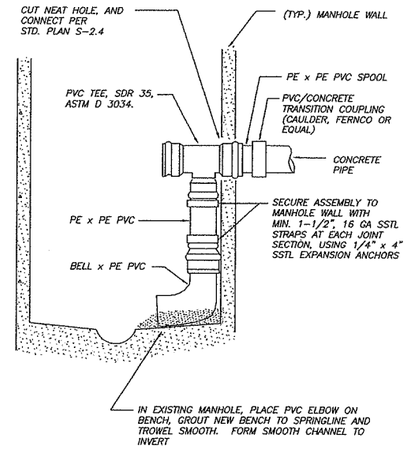

NOTE: INSIDE DROP ASSEMBLY MAY BE USED ONLY WHEN SPECIFICALLY APPROVED BY CITY ENGINEER. MAXIMUM ONE ASSEMBLY PER 48" MANHOLE.

INSIDE DROP CONNECTION
S-2.7

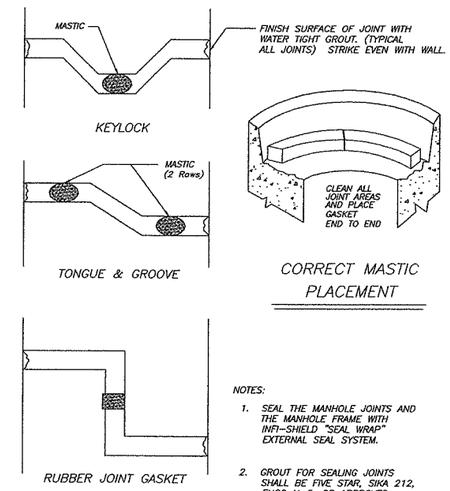

NOTES:

1. SEAL THE MANHOLE JOINTS AND THE MANHOLE FRAME WITH INFI-SHIELD "SEAL WRAP" EXTERNAL SEAL SYSTEM.
2. GROUT FOR SEALING JOINTS SHALL BE FIVE STAR, SIKA 212, EUCO N-5, OR APPROVED NON-SHRINK GROUT. STANDARD GROUT WILL NOT BE ACCEPTED.

STANDARD MANHOLE JOINT DETAILS
S-2.9

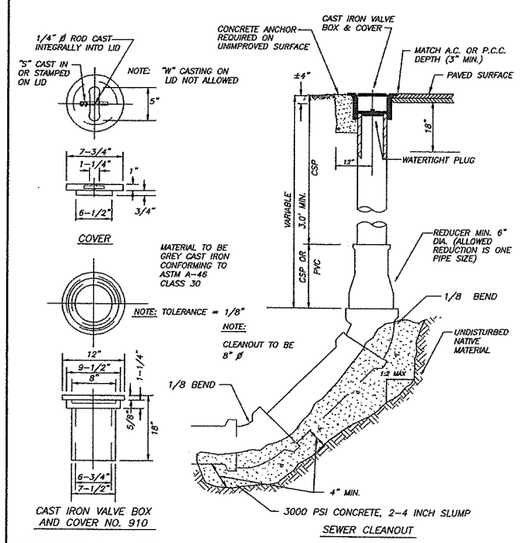

VALVE BOX SHALL BE FORT VANCOUVER PATTERN NO. 910 CAST IRON OR APPROVED EQUAL

STANDARD SEWER CLEANOUT
S-3.1

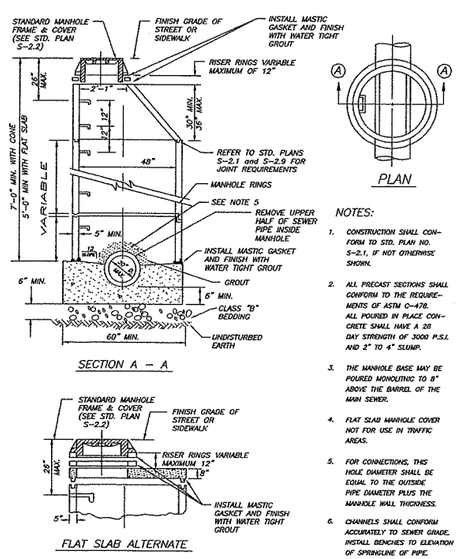

NOTES:

1. CONSTRUCTION SHALL CONFORM TO STD. PLAN NO. S-2.1, IF NOT OTHERWISE SHOWN.
2. ALL PRECAST SECTIONS SHALL CONFORM TO THE REQUIREMENTS OF ASTM C-478. ALL POURED IN PLACE CONCRETE SHALL HAVE A 28 DAY STRENGTH OF 3000 P.S.I. AND 2" TO 4" SLUMP.
3. THE MANHOLE BASE MAY BE POURED MONOLITHIC TO 8" ABOVE THE BARREL OF THE MAIN SEWER.
4. FLAT SLAB MANHOLE COVER NOT FOR USE IN TRAFFIC AREAS.
5. FOR CONNECTIONS, THIS HOLE DIAMETER SHALL BE EQUAL TO THE OUTSIDE PIPE DIAMETER PLUS THE MANHOLE WALL THICKNESS.
6. CHANNELS SHALL CONFORM ACCURATELY TO SEWER GRADE. INSTALL BENCHES TO ELEVATION OF SPRINGLINE OF PIPE.

STANDARD SAMPLING MANHOLE (STRAIGHT-THROUGH MANHOLE)
S-4.1

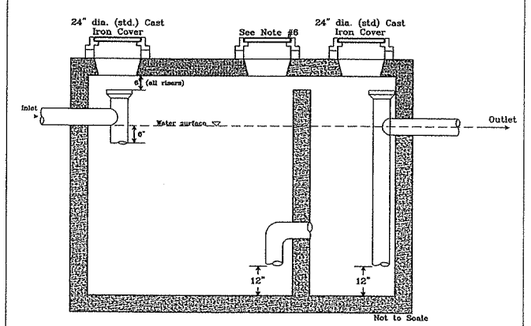

NOTES:

1. Position risers below and off-center of manholes to allow access and entry.
2. No concrete plugs below cast iron manhole covers.
3. Place interceptor in location which allows for pump truck/maintenance access.
4. Fill with clean water prior to start-up and after pumpouts.
5. **Gray Water Only.** Domestic (sanitary) water shall be conveyed by separate line.
6. For capacities equal to or greater than 1,500 gallons, a center manhole is required and the cover shall be a standard 24" diameter cover.
7. Unit shall be rated for H-20 AASHTO loading (certified).
8. Submit vault specs with site/civil plans for final approval.

FOR SPECIFIC INFORMATION CONTACT JON MORGAN @ (360) 696-8177

STANDARD GREASE INTERCEPTOR
S-4.2

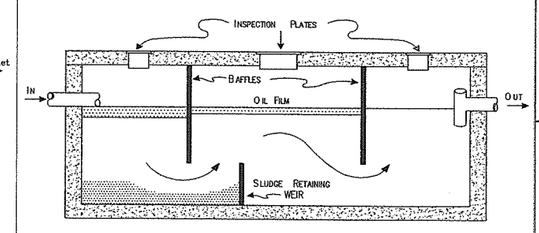

RECOMMENDED MANAGEMENT PRACTICES

1. SIZE SEPERATOR FOR A 45 MINUTE RETENTION TIME AT PEAK FLOW, OR EQUIVALENT RETENTION IF USING COALESCING PLATES.
2. BEFORE INSTALLATION, SUBMIT ALL PLANS TO THE CITY'S INDUSTRIAL PRETREATMENT OFFICE FOR REVIEW. INDICATE ALL SOURCES OF WATER TO SEPERATE AND PROVIDE ESTIMATES OF EXPECTED AVERAGE AND MAXIMUM FLOW RATES.
3. INSPECT SEPERATOR EVERY 6 MONTHS. USE A LONG STICK TO CHECK SLUDGE BUILD-UP IN FIRST CHAMBER. HAVE SEPERATOR CLEANED IF SLUDGE BUILD-UP IS OVER 8" INCHES OR IF THERE ARE MORE THAN 2" INCHES OF OIL FLOATING ON THE SURFACE IN ANY CHAMBER.
4. FOR COALESING PLATE SEPERATOR, CLEAN THE PLATES BEFORE THEY BECOME COATED WITH SILT OR SOLIDS.
5. DO NOT ALLOW THE FOLLOWING TO ENTER THE SEPERATOR AS THEY WILL EMULSIFY THE OIL: ANTIFREEZE, DEGREASERS, DETERGENTS, ALCOHOL & SOLVENTS. ALSO, AVOID OVERLOADING THE SYSTEM WITH CONCENTRATED OILS OR HEAVY METAL-BEARING WASTEWATER.
6. TO REDUCE MAINTEMANCE, REMOVE FLOATING OIL WITH ABSORBENT PADS OR VACUUM OUT OIL FILM. IF NECESSARY, INSTALL A CATCH BASIN BEFORE THE SEPARATOR TO REDUCE SLUDGE LOAD.

STANDARD OIL/WATER SEPARATOR
S-4.3

CALL 48 HOURS BEFORE YOU DIG 1-800-553-4344 "It's the Law" NORTHWEST UTILITY NOTIFICATION CENTER

DATE	By	APPRV.	REVISIONS

CITY OF VANCOUVER WASHINGTON

SANITARY SYSTEM PLANNING & DESIGN
P.O. BOX 1995
VANCOUVER, WA 98668-1995
(360) 696-8220
FAX: (360) 696-8460
www.ci.vancouver.wa.us

STANDARD SEWER MAIN DETAILS
SHEET 2

Approved By: May 29, 2002
CITY ENGINEER DATE

SHEET OF

DESIGNED	BAK
DRAWN	BAK
CRP	311022
HOR.	1"=20'
VERT.	NA
DATE	1/16/04
DWG:	SD2
SHEET 91	OF 93

CALL 48 HOURS BEFORE YOU DIG 1-800-553-4344 "It's the Law" NORTHWEST UTILITIES NOTIFICATION CENTER

DESIGN & ENGINEERING DIVISION
DESIGN SECTION

NE 76TH ST (SR-503 TO NE 147TH AVE)
SEWER DETAIL #2

proud past, promising future
CLARK COUNTY WASHINGTON

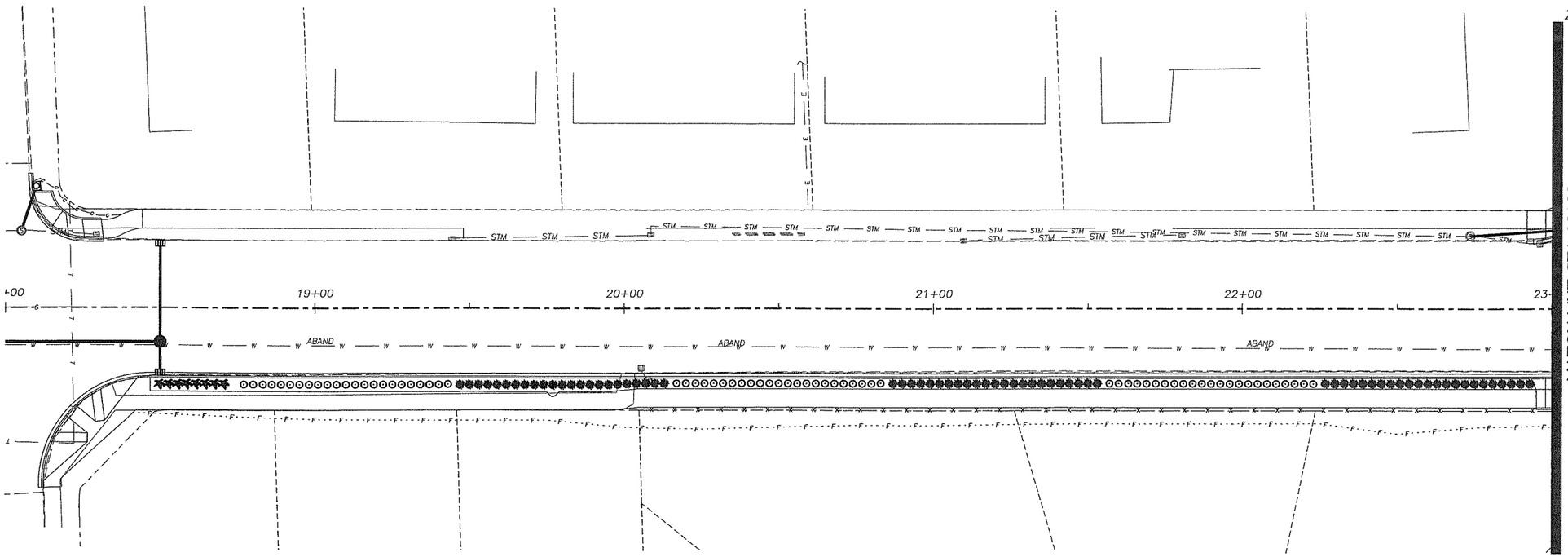

LEGEND

Quantity	Symbol	Scientific Name	Common Name	Planting Size
224		Viburnum Davidii 'David Viburnum'	'David Viburnum'	2 Gal
250		Berberis thunbergii 'Crimson Pygmy'	'Crimson Pygmy' Barberry	2 Gal
136		Juniperus Horizontalis 'Turquoise Spreader'	'Turquoise Spreader' Juniper	1 Gal

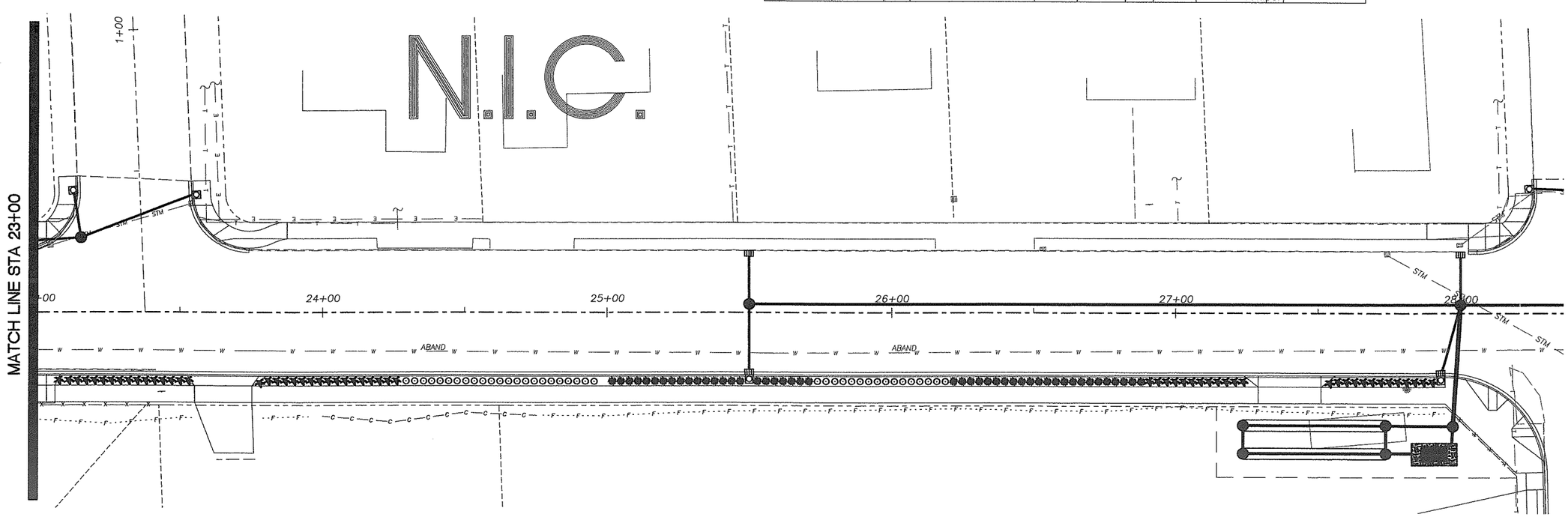

DESIGNED	BAK
DRAWN	BAK
CRP	311022
HOR.	1"=20'
VERT.	NA
DATE	1/16/04
DWG:	LSC1
SHEET 92	OF 93

CALL 48 HOURS BEFORE YOU DIG
1-800-553-4344
"It's the Law"
NORTHWEST UTILITIES NOTIFICATION CENTER

DESIGN & ENGINEERING DIVISION
DESIGN SECTION

NE 76TH ST (SR-503 TO NE 147TH AVE)
LANDSCAPING PLAN

proud past, promising future
CLARK COUNTY
WASHINGTON

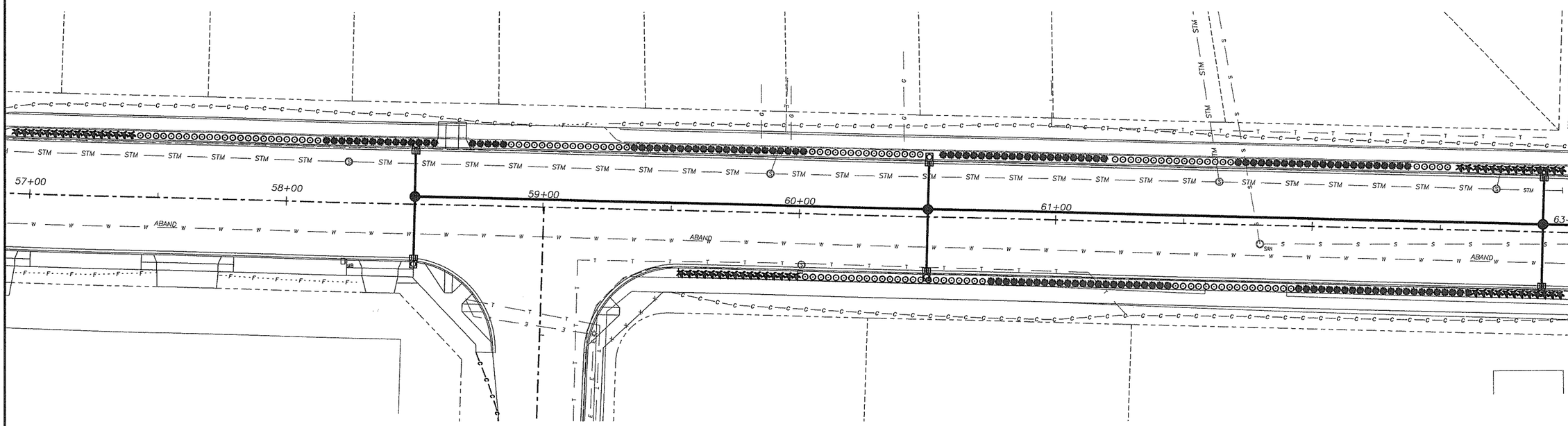

PLANTING NOTES

1. CONTRACTOR SHALL VERIFY ALL QUANTITIES, MEASUREMENTS, AND SITE CONDITIONS.
2. PLANTING PERIOD IS FROM APPROXIMATELY OCTOBER 15 TO APRIL 15, WEATHER DEPENDENT.
3. CONTRACTOR SHALL VERIFY THE LOCATION OF ALL EXISTING UTILITIES.
4. INSTALLED PLANTS SHALL BE IMMEDIATELY WATERED IN BY CONTRACTOR.
5. ALL PLANT MATERIALS SHALL CONFORM IN SIZE AND GRADE TO THE "AMERICAN STANDARD FOR NURSERY STOCK", CURRENT EDITION.
6. PLANTS SHALL BE INSTALLED ACCORDING TO DETAILS SHOWN.
7. NO SUBSTITUTIONS IN PLANT VARIETIES SHALL BE MADE WITHOUT APPROVAL FROM THE COUNTY LANDSCAPE DESIGNER.
8. LANDSCAPE WORK SHALL BE REVIEWED AND APPROVED BY THE COUNTY ENGINEER. SOME FIELD ADJUSTMENT MAY BE NECESSARY TO REFLECT ACTUAL GRADING AND SITE CONDITIONS.
9. FOLLOWING PLANT INSTALLATION AND PLACEMENT OF WEED MAT, 3" TO 4" OF BRIGHT MEDIUM RED BARK DUST, OR OTHER APPROVED EQUIVALENT, SHALL BE SPREAD THROUGHOUT PLANTING STRIPS.
10. FOLLOWING COMPLETION OF LANDSCAPE PROJECT, SITE SHALL BE MAINTAINED WEEKLY. MAINTENANCE SHALL INCLUDE: ADEQUATE WATERING OF ALL INSTALLED PLANTS TO ENSURE HEALTH AND SURVIVAL, REMOVING WEEDS FROM SITE, MOWING GRASS AS NEEDED, MONITOR TREE STAKES AND TIES TO ENSURE PROPER SUPPORT AND TO PREVENT TIES FROM GIRDLING TRUNKS. REMOVE TREE STAKES AND TIES AFTER ONE YEAR MINIMUM, OR AS NEEDED UNTIL ADEQUATE ANCHORING IS ATTAINED. BARKDUST SHALL BE REAPPLIED AS NEEDED.

N.I.C.

PLANT SCHEDULE

Shrub

Quantity	Symbol	Scientific Name	Common Name	Planting Size	Spacing
224		Viburnum Davidii 'David Viburnum'	'David Viburnum'	2 Gal	3' OC
250		Berberis thunbergii 'Crimson Pygmy'	'Crimson Pygmy' Barberry	2 Gal	3' OC
136		Juniperus Horizontalis 'Turquoise Spreader'	'Turquoise Spreader' Juniper	1 Gal	3' OC

Grass Mix

0.23 acre	Festuca rubra	Chewing Fescue	25%	7 Lbs. per 1000 SF
	Lolium perenne	Essence Perennial Ryegrass	75%	

Grass mix to be used in all other planter strip areas where tress/shrubs have not been planted.

Ground Cover

Quantity	Scientific Name	Spacing
4 C.Y.	Compost Planting Amendments	as shown
75 C.Y.	Medium Bright Bark Dust	as shown

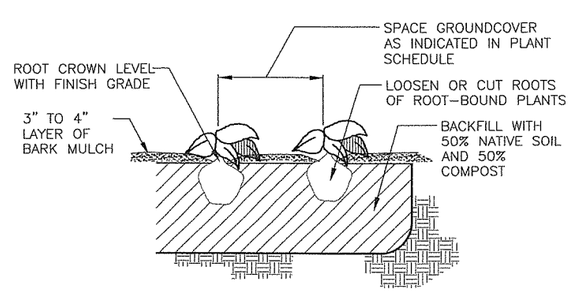

GROUNDCOVER PLANTING DETAIL

NOT TO SCALE

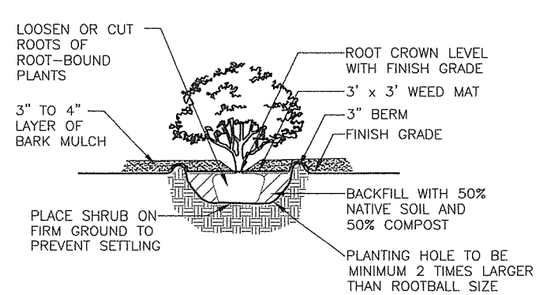

SHRUB PLANTING DETAIL

NOT TO SCALE

DESIGNED	BAK
DRAWN	BAK
CRP	311022
HOR.	1"=20'
VERT.	NA
DATE	1/16/04
DWG:	LSC2
SHEET 93	OF 93

CALL 48 HOURS BEFORE YOU DIG
1-800-553-4344
"It's the Law"
NORTHWEST UTILITIES NOTIFICATION CENTER

DESIGN & ENGINEERING DIVISION
DESIGN SECTION

NE 76TH ST (SR-503 TO NE 147TH AVE)
LANDSCAPING PLAN

proud past, promising future
CLARK COUNTY
WASHINGTON