BMP C220 – Storm Drain Inlet Protection

Inlet protection prevents mud from washing into the storm sewer. Mud and debris can cause maintenance issues for the storm sewer system and degradation of stream water quality and salmon habitat.

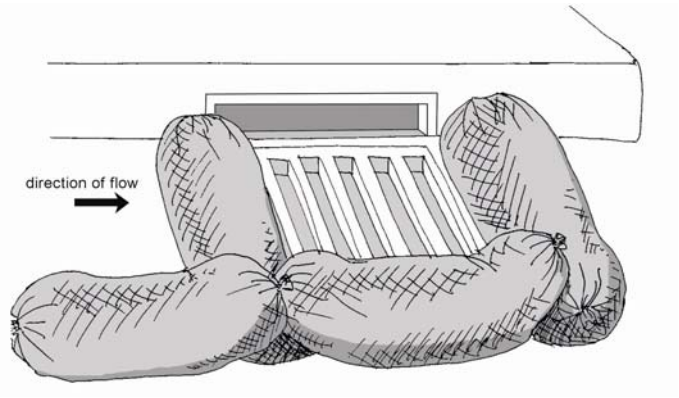

Wood chip bags

Catch basin inserts

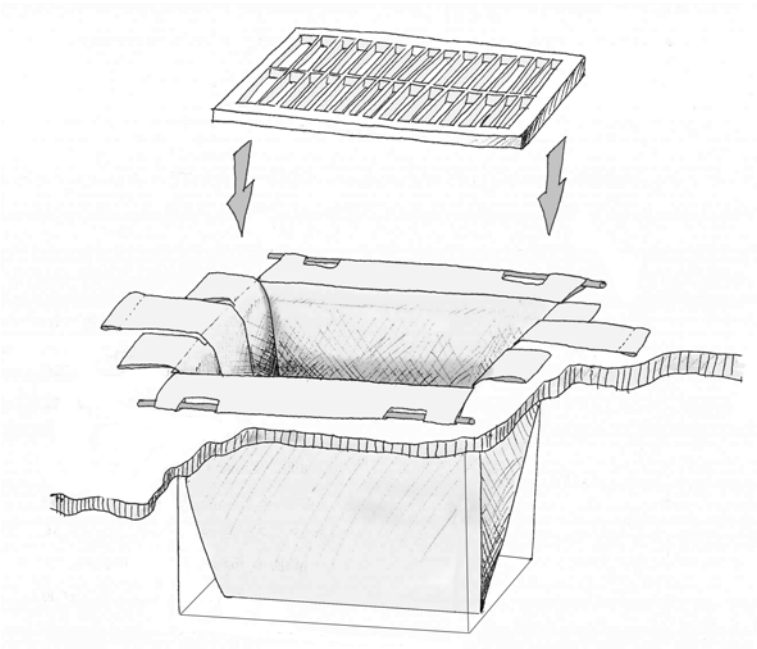

Revised 3/30/12

Community Development
1300 Franklin Street, Vancouver, Washington
Phone: (360) 397-2375 Fax: (360) 397-2011
www.clark.wa.gov/development

For an alternate format, contact the Clark County ADA Compliance Office.
Phone: (360) 397-2322
Relay: 711 or (800) 833-6384
E-mail: ADA@clark.wa.gov

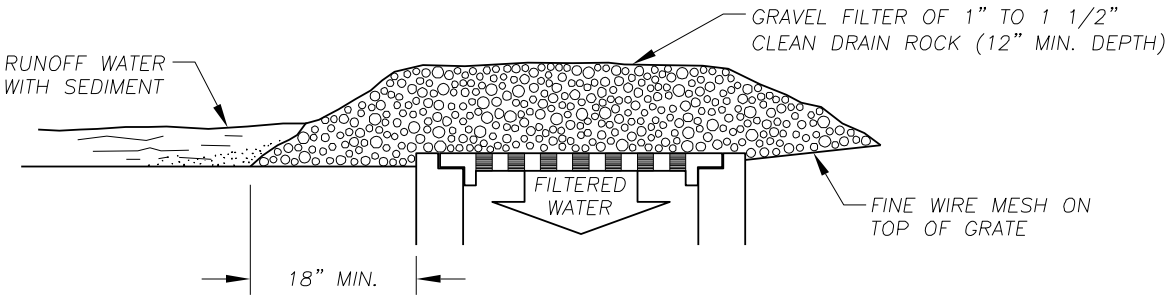

GRAVEL & WIRE MESH

NOT TO BE USED IN TRAVELED WAY IF
IT MAY RESULT IN A TRAFFIC HAZARD

INLET PROTECTION NOTES:

1. INLET PROTECTION IS INTENDED TO PREVENT COARSE SEDIMENT FROM ENTERING STORM DRAINAGE SYSTEMS BY FILTERING RUNOFF AND RETAINING SEDIMENT BEFORE IT REACHES A DRAINAGE OR STORM SEWER SYSTEM.
2. PLACE INLET PROTECTION IN AREAS WHERE WATER CAN POND, AND WHERE PONDING WILL NOT HAVE ADVERSE IMPACTS.
3. INLET PROTECTION MUST ALLOW FOR OVERFLOW IN A SEVERE STORM EVENT.
4. INLET PROTECTION TYPES INCLUDE:
   TYPE 1 – GRAVEL AND WIRE MESH
   TYPE 2 – MASONRY AND ROCK
   TYPE 3 – SILT FENCE
   TYPE 4 – BIO–FILTER BAGS
   TYPE 5 – SILT SACK INSERT
5. INSPECT ONCE PER WEEK ON ACTIVE SITES, ONCE EVERY TWO WEEKS ON INACTIVE SITES, AND WITHIN 24 HOURS FOLLOWING A 0.5 INCH RAIN EVENT.
6. CLEAN INLET PROTECTION DURING AND AFTER EACH SIGNIFICANT STORM AND REMOVE SEDIMENT FROM BEHIND STRUCTURE AFTER EVERY STORM.
7. IF ROCK BECOMES CLOGGED WITH SEDIMENT, IT MUST BE CAREFULLY REMOVED FROM THE INLET AND EITHER CLEANED OR REPLACED.
8. ASSESS THE IMPACT OF ALLOWING WATER TO POND AT THE INLET AND PROVIDE AN OVERFLOW WEIR OR SOME OTHER TYPE OF RELIEF AS NEEDED.
9. CONSIDER THE EFFECT PLACING OBSTRUCTIONS AT INLETS ON GRADE MAY HAVE ON THEIR EFFICIENCY.
10. USE MECHANICAL MEANS TO REMOVE SEDIMENT DEPOSITS (SHOVEL, BROOM, SWEEPER/VACTOR UNIT).
11. REMOVE SEDIMENT ACCUMULATED ON OR AROUND THE PROTECTION AS NEEDED TO MAINTAIN INTENDED FUNCTION.
12. REPAIR OR REPLACE MATERIALS AS NEEDED TO ENSURE PROPER FUNCTION.

NO.	REVISIONS	DATE	BY

DWG: E3.DWG

Department of Public Works
CLARK COUNTY
WASHINGTON
proud past, promising future

INLET PROTECTION TYPE 1
GRAVEL AND WIRE MESH

APPROVED
COUNTY ENGINEER
5/23/08
DATE

STANDARD
E3
DETAIL
DESIGNED
DRAWN
DATE 05/23/08

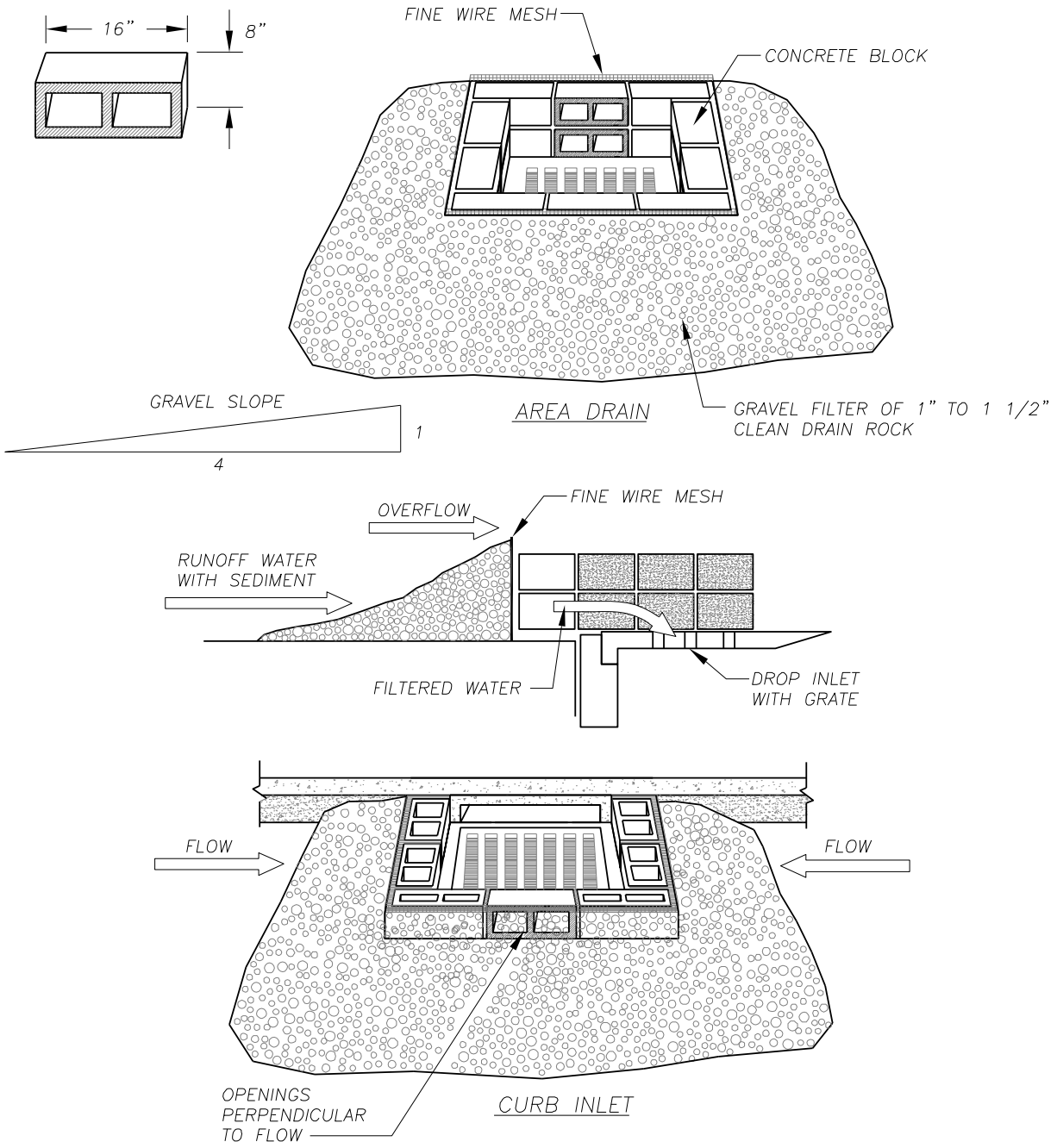

BLOCK AND GRAVEL INLET BARRIERS

NOT TO BE USED IN TRAVELED WAY IF IT MAY RESULT IN A TRAFFIC HAZARD

NOTES:

1. BLOCKS SHALL BE STACKED WITH THE OPENINGS ON THE TOP AND BOTTOM EXCEPT FOR THE CENTER BLOCKS. CENTER BLOCKS WILL HAVE OPENINGS PERPENDICULAR TO FLOW.
2. SEE INLET PROTECTION NOTES STD. DETAIL E3.

NO.	REVISIONS	DATE	BY

DWG: E3a.DWG

Department of Public Works
CLARK COUNTY
WASHINGTON
proud past, promising future

INLET PROTECTION TYPE 2
MASONRY AND ROCK

APPROVED

Peter Caplan
COUNTY ENGINEER

5/23/08
DATE

STANDARD
E3a
DETAIL
DESIGNED
DRAWN
DATE 05/23/08

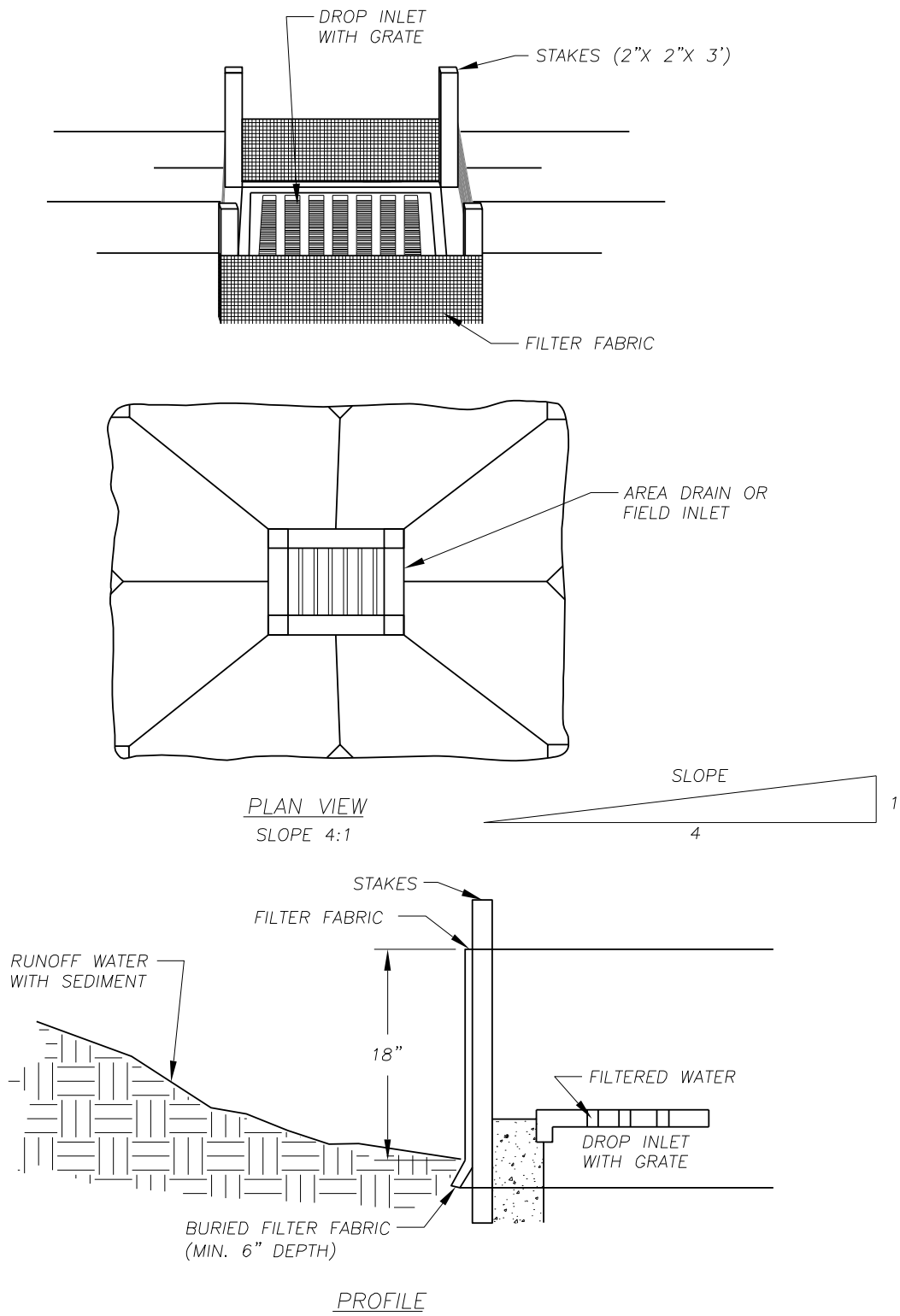

NOTE:

1. SEE INLET PROTECTION NOTES STD. DETAIL E3.

NO.	REVISIONS	DATE	BY

DWG: E3b.DWG

Department of Public Works
CLARK COUNTY
WASHINGTON
proud past, promising future

INLET PROTECTION TYPE 3
SILT FENCE

APPROVED

Peter Capen
COUNTY ENGINEER

5/23/08
DATE

STANDARD
E3b
DETAIL
DESIGNED
DRAWN
DATE 05/23/08

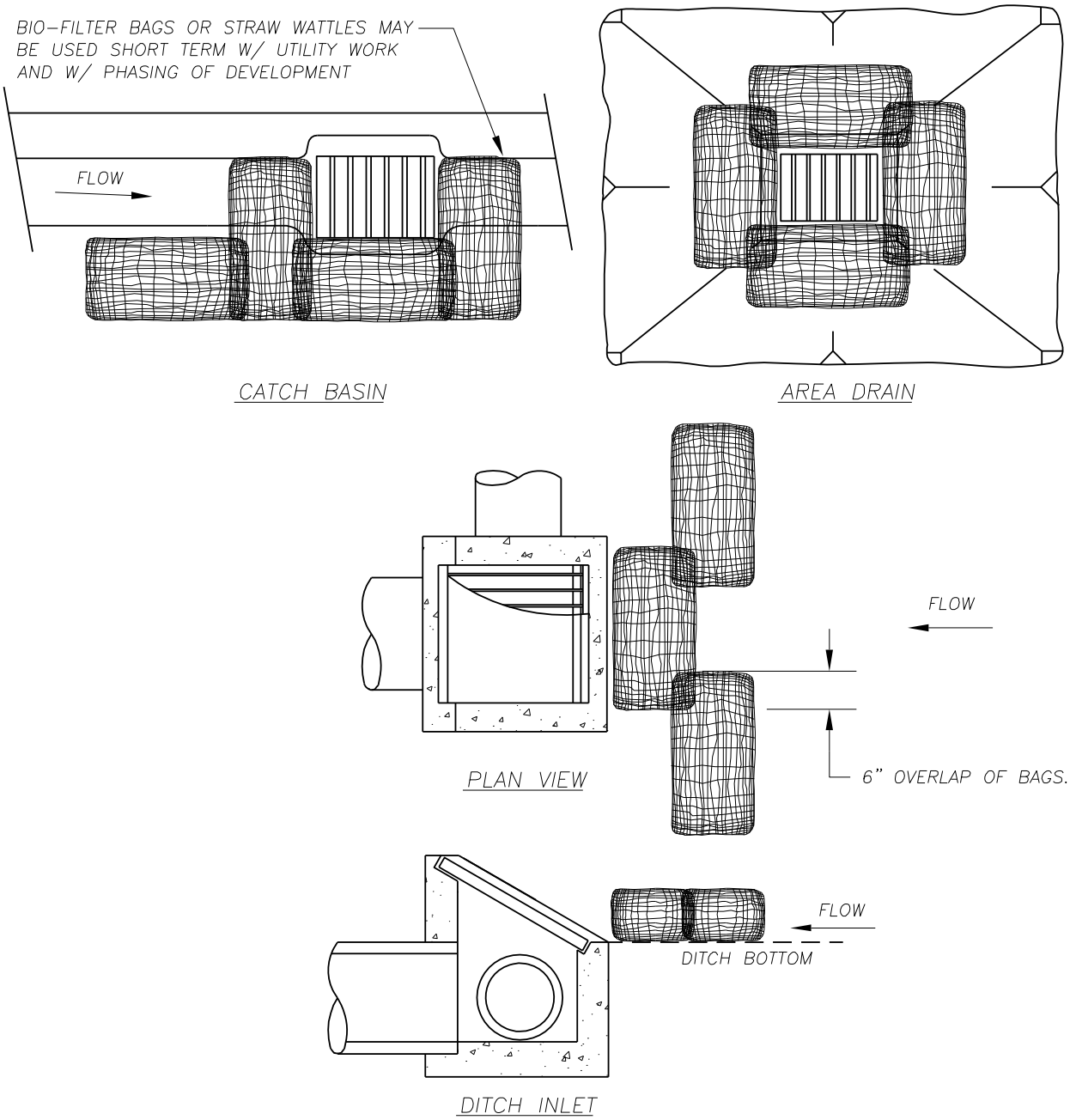

NOTES:

1. ADDITIONAL MEASURES MUST BE CONSIDERED DEPENDING ON SOIL TYPE.
2. BIO-FILTER BAGS SHOULD BE STAKED WHERE APPLICABLE USING (2) 1"x2" WOODEN STAKES OR APPROVED EQUAL PER BAG.
3. STRAW WATTLES MUST BE STABILIZED BY ATTACHING WIRE CLIPS TO THE CATCH BASIN PER MANUFACTURERS SPECIFICATIONS.
4. INLET PROTECTION MUST BE REGULARLY INSPECTED BY THE EROSION CONTROL INDIVIDUAL TO INSURE PROPER PLACEMENT/FUNCTION AND MAINTENANCE.
5. SEE INLET PROTECTION NOTES STD. DETAIL E3.

NO.	REVISIONS	DATE	BY

DWG: E3c.DWG

Department of Public Works
CLARK COUNTY WASHINGTON
proud past, promising future

INLET PROTECTION TYPE 4
BIO-FILTER BAGS

APPROVED
Peter Capelli
COUNTY ENGINEER
5/23/08
DATE

STANDARD
E3c
DETAIL
DESIGNED
DRAWN
DATE 05/23/08

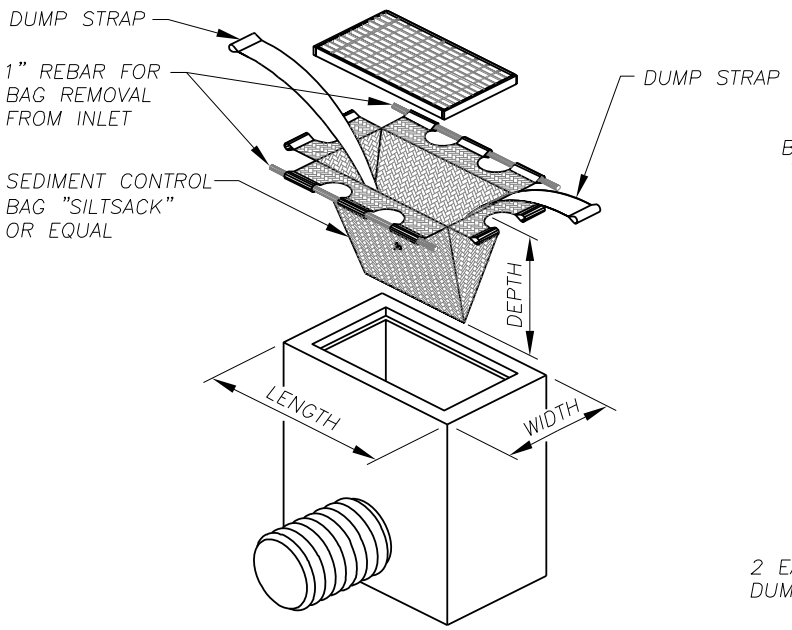

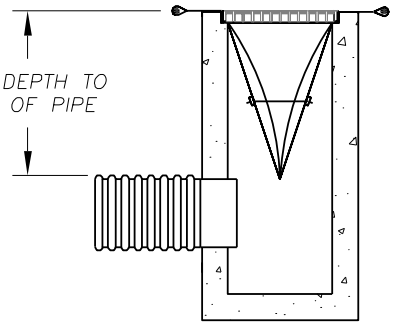

INSTALLATION DETAIL

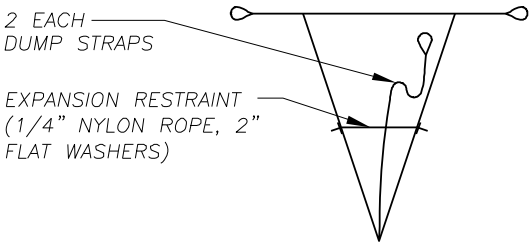

BAG DETAIL

CB STYLE	LENGTH	WIDTH	DEPTH
TYPE 1 CB	24"	20"	VARIES
TYPE 1 CCI	29.5"	24"	VARIES
USA G2	32.5"	27.5"	VARIES

INLET SEDIMENT CONTROL DEVICE – SILT SACK

NOTES:

1. THE DIMENSION CHART ABOVE IS FOR STANDARD CATCH BASINS AND INLETS ONLY. THE CONTRACTOR IS RESPONSIBLE FOR PROVIDING THE CORRECT SIZE DEVICE FOR EACH INLET.
2. FOR NON-STANDARD CATCH BASINS AND INLETS, THE CONTRACTOR SHALL MEASURE DIMENSIONS IN THE FIELD AND ORDER THE APPROPRIATE SIZE(S).
3. THE INLET SEDIMENT CONTROL DEVICE SHALL BE OF HIGH FLOW DESIGN (200 GAL/MIN/FT), AS PER THE MANUFACTURER'S SPECS.
4. THE SEDIMENT CONTROL DEVICE SHALL BE INSPECTED DAILY BY THE CONTRACTOR AND MAINTAINED A MINIMUM ONCE PER MONTH OR WITHIN THE 48 HOURS FOLLOWING A STORM EVENT. FILTER SHALL BE CLEANED IN A MANNER WHICH ENSURES THAT ALL SEDIMENT REMAINS ON SITE.
5. SUBSTITUTION OF A SHEET OF FILTER FABRIC PLACED OVER THE OPENING OF THE INLET IS NOT APPROVED.
6. RECESSED CURB INLET CATCH BASINS MUST BE BLOCKED WHEN USING FILTER FABRIC INLET SACKS, SIZE OF FILTER INLET SACK TO BE DETERMINED BY MANUFACTURER.
7. THE FILTER SHALL BE REPLACED OR CLEANED WHEN THE BAG BECOMES HALF FULL.
8. SEE INLET PROTECTION NOTES STD. DETAIL E3.

NO.	REVISIONS	DATE	BY

DWG: E3d.DWG

Department of Public Works
CLARK COUNTY WASHINGTON
proud past, promising future

INLET PROTECTION TYPE 5
SILT SACK

APPROVED
COUNTY ENGINEER
5/23/08
DATE

STANDARD
E3d
DETAIL
DESIGNED
DRAWN
DATE 05/23/08