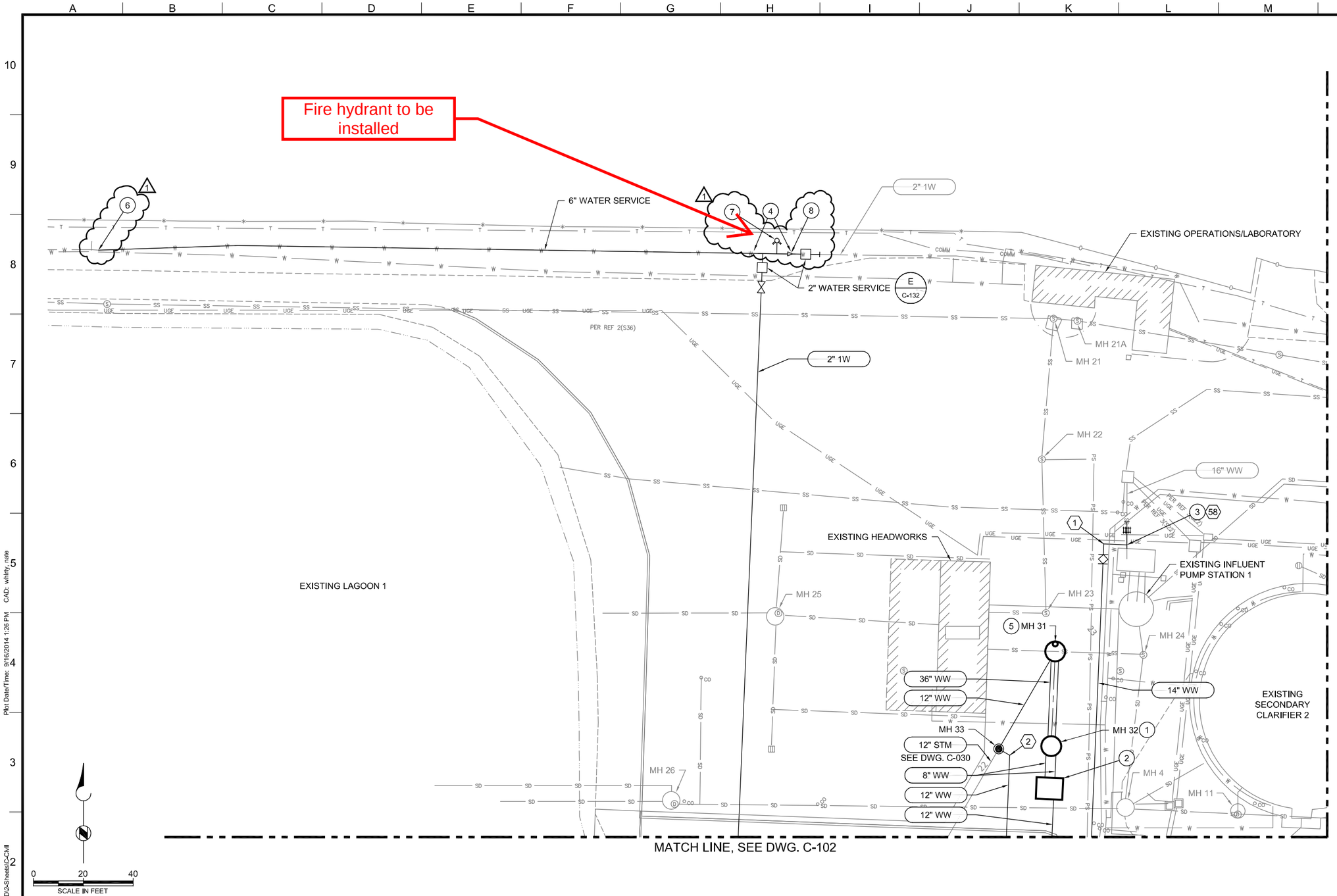


## GENERAL NOTES:

1. SEE DWGS. C-011 AND C-012 FOR FOR MANHOLE DATA AND CONTROL COORDINATES.
2. SEE DWGS. C-120 AND C-121 FOR PROCESS PIPING PROFILES.
3. POTHOLE LOCATIONS OF PIPE CONNECTIONS TO EXISTING, PIPE CROSSINGS THAT INVOLVE EXISTING PIPE, AND PROPOSED MANHOLE AND VAULT LOCATIONS. ADJUST LAYOUT IF NECESSARY WITH APPROVAL OF CONSTRUCTION MANAGER.
4. WHERE CONSTRUCTION OF BURIED UTILITIES OCCURS WITHIN EXISTING ASPHALT PAVED AREAS, CONTRACTOR SHALL SAWCUT THE EXISTING PAVEMENT AS REQUIRED FOR TRENCH EXCAVATION AND REMOVE ASPHALT PAVEMENT. FOLLOWING INSTALLATION OF THE BURIED UTILITIES, BACKFILL TRENCH UP TO THE ELEVATION OF THE BOTTOM OF THE EXISTING SUBBASE, PLACE AND COMPACT SUBBASE MATERIAL, AND REPLACE ASPHALT PAVEMENT TO MATCH THE THICKNESS OF THE ADJACENT PAVEMENT.

## KEY NOTES:

1. INFLUENT PUMP STATION 2, SEE DWG. C-430.
2. INFLUENT PUMP STATION 2 VALVE VAULT, SEE DWG. C-430.
3. CONNECT TO EXISTING 16" WW (DI) WITH RESTRAINED TEE, PE SPOOL, AND RESTRAINED SLEEVE-TYPE COUPLING. OUTAGE IPS-2.
4. CONNECT TO EXISTING 2" 1W.
5. OUTAGE IPS-1.
6. CONNECT TO EXISTING 6" WATER MAIN DOWNSTREAM OF CONNECTION TO EXISTING HYDRANT.
7. PROVIDE FIRE HYDRANT IN ACCORDANCE WITH SECTION 33 12 00.
8. 6" x 2" REDUCER.

## KEY PLAN

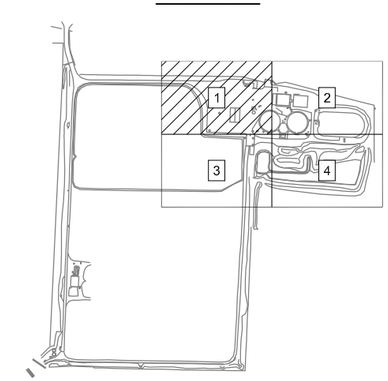


Brown AND Caldwell

PORTLAND, OREGON

SUBMITTED: _____ DATE: _____
PROJECT MANAGER

APPROVED: _____ DATE: _____
BROWN AND CALDWELL

LINE IS 2 INCHES AT FULL SIZE (IF NOT 2" - SCALE ACCORDINGLY)

DESIGNED: CAD
DRAWN: NSW
CHECKED: JRP
CHECKED: RMG
APPROVED: DWL

EXTERNAL REFERENCE FILES

REVISIONS

| ZONE | REV. | DESCRIPTION | DATE |
|---|---|---|---|
| | 1 | ADDENDUM NO. 4, ITEM 21 | 8/21/14 |
| | 2 | ADDENDUM NO. 4, ITEM 22 | 8/21/14 |

CONFORMED DOCUMENT

FOR SIGNATURE AND SEAL SEE CONTRACT DOCUMENTS

CITY OF WASHOUGAL
2014 WWTP IMPROVEMENTS
CIVIL

SITE PROCESS PIPING PLAN 1

FILENAME 144581-SF-C-100.DWG
BC PROJECT NUMBER 144581
SCALE AS SHOWN
DRAWING NUMBER C-100
SHEET NUMBER 37 OF 213

Path: P:\144581 Washougal WWTP Phase 2\CAD\2-Sheets\C-Civil
Plot Date/Time: 9/16/2014 1:26 PM CAD: whirty, nate

## GENERAL NOTES:

1. 0 INDICATES HORIZONTAL CONTROL POINT LOCATIONS, SEE DRAWING C-011 FOR COORDINATES.

2. SEE SHEETS S-005 THROUGH S-007 FOR STANDARD CONCRETE DETAILS.

3. COORDINATE ALL PIPE PENETRATIONS WITH CIVIL AND MECHANICAL DRAWINGS.

4. GRIDLINES ARE THROUGH CENTERLINES OF PEDESTALS. BUILDING MANUFACTURER SHALL LOCATE COLUMNS TO PROVIDE 12" MIN EDGE DISTANCE AT ANCHOR BOLTS, TYPICAL.

5. COORDINATE WIDTH OF HARIPINS AT COLUMNS WITH APPROVED PRE-ENGINEERED METAL BUILDING ANCHOR BOLT SUBMITTAL.

6. SUBMIT PROPOSED CONSTRUCTION JOINT LAYOUT FOR REVIEW AND APPROVAL PRIOR TO CONSTRUCTION.

7. INSTALL BIRD NETTING ON THE ENTIRE UNDERSIDE OF THE STORMWATER DECANT FACILITY ROOF, FLUSH WITH THE BOTTOM OF THE ROOF FRAMING MEMBERS. AT A MINIMUM, THE BIRD NETTING SHALL EXTEND FROM GRIDLINE A TO GRIDLINE B, AND FROM GRIDLINE 1 TO GRIDLINE 5. SEE SECTION 10 81 13 FOR ADDITIONAL INFORMATION. (1)

## LEGEND:

DS — DOWNSPOUT, CONNECT TO 6" STM AS SHOWN ON CIVIL DRAINAGE PLAN.

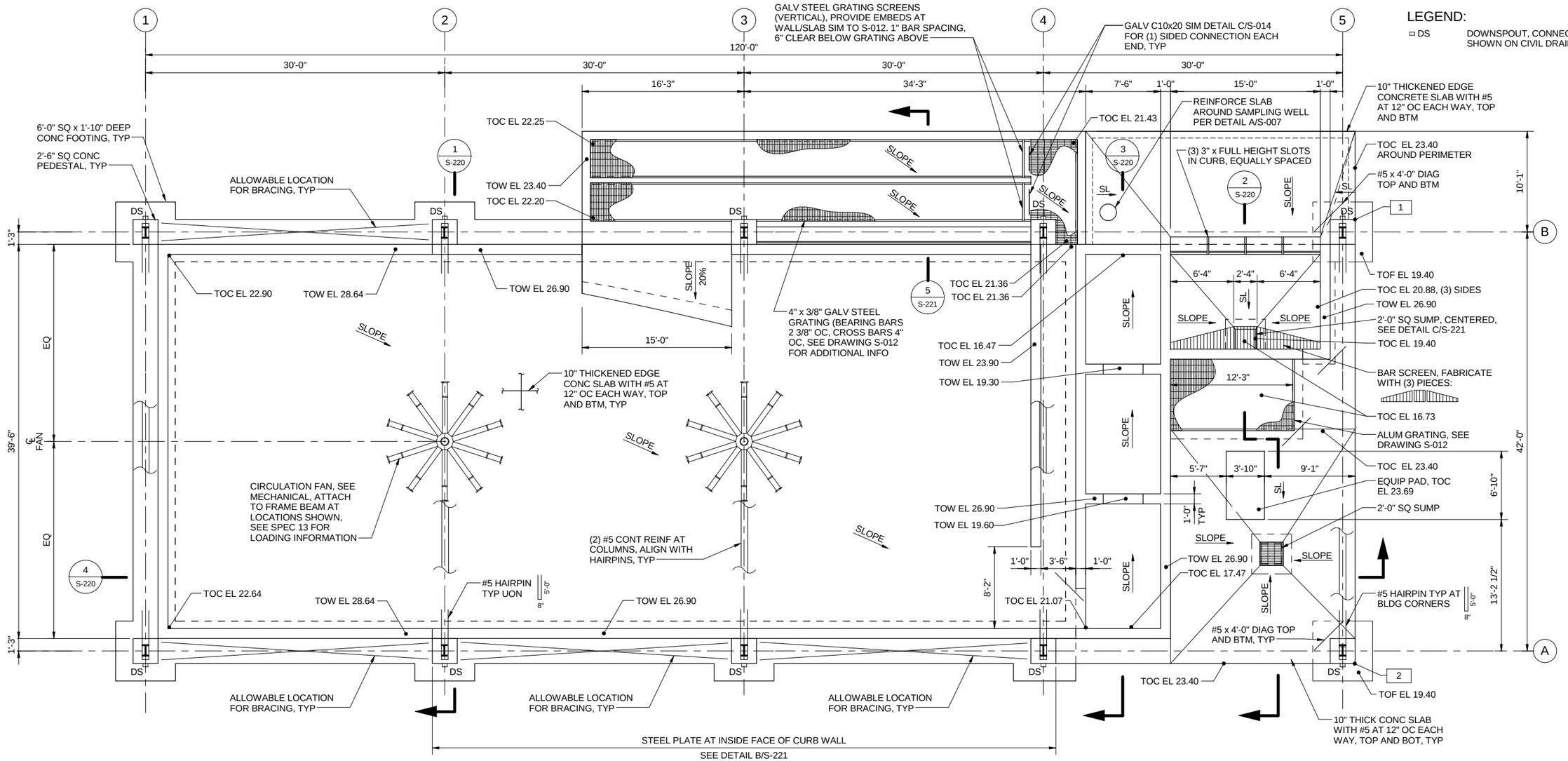


## FOUNDATION/FLOOR PLAN

3/16" = 1'-0"

| | | | |
|---|---|---|---|
| Brown AND Caldwell | LINE IS 2 INCHES AT FULL SIZE (IF NOT 2" - SCALE ACCORDINGLY) | EXTERNAL REFERENCE FILES | |
| PORTLAND, OREGON | DESIGNED: JFH | | |
| SUBMITTED: PROJECT MANAGER DATE: 5/30/14 | DRAWN: REK | | |
| APPROVED: BROWN AND CALDWELL DATE: 5/30/14 | CHECKED: EJF | | |
| | CHECKED: RMG | | |
| | APPROVED: DWL | | |

REVISIONS

| ZONE | REV. | DESCRIPTION | DATE |
|---|---|---|---|
| | 1 | ADDENDUM NO. 1, ITEM 17 | 8/01/2014 |

CONFORMED DOCUMENT

FOR SIGNATURE AND SEAL
SEE CONTRACT DOCUMENTS

CITY OF WASHOUGAL
2014 WWTP IMPROVEMENTS
STRUCTURAL

STORMWATER DECANT FACILITY
FOUNDATION PLAN

FILENAME: DECANT FACILITY.RVT
BC PROJECT NUMBER: 144581
SCALE: 3/16" = 1'-0"
DRAWING NUMBER: S-200
SHEET NUMBER: 88 OF 212

Path: P:\144581 Washougal WWTP Phase 2\CAD\12-BIM\Decant Facility.rvt
Plot Date/Time: 9/23/2015 4:33:45 PM CAD: REK

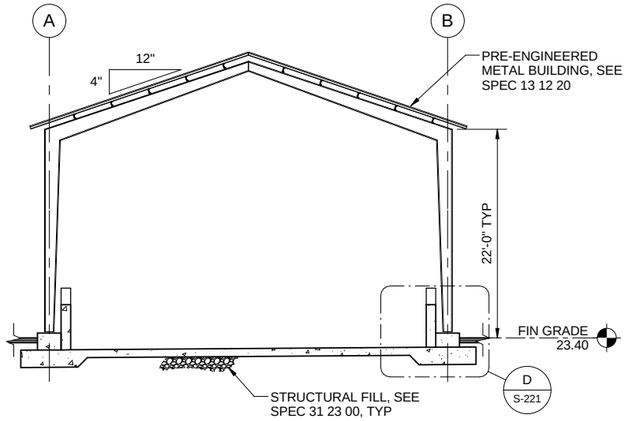


SECTION 1 / S-200

SCALE: 1/8" = 1'-0"

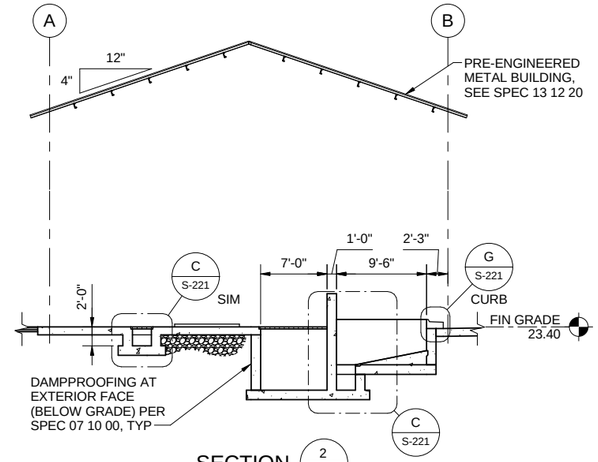


SECTION 2 / S-200

SCALE: 1/8" = 1'-0"

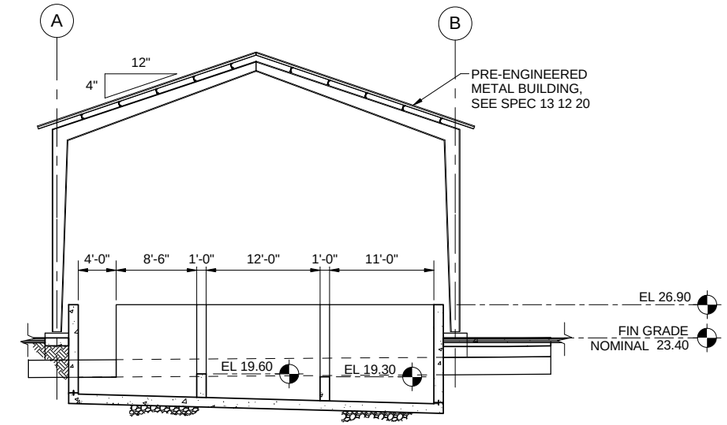


SECTION 3 / S-200

SCALE: 1/8" = 1'-0"

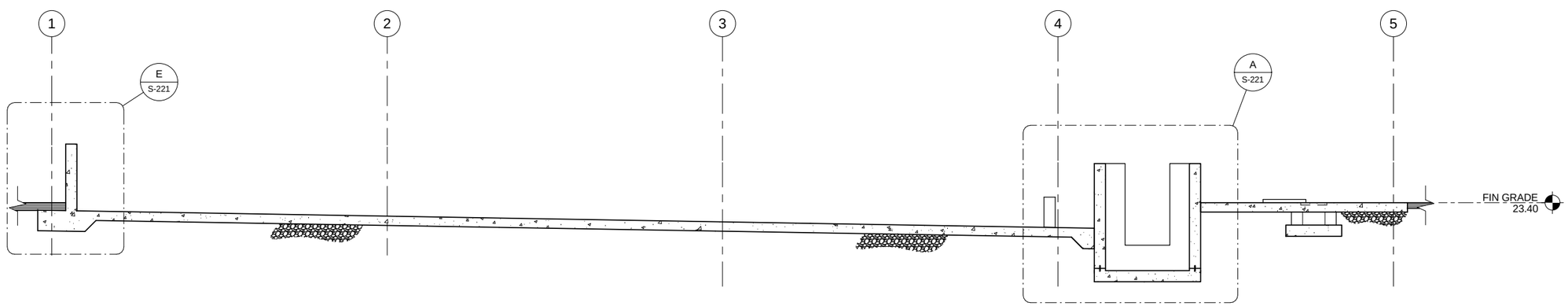


SECTION 4 / S-200

SCALE: 3/16" = 1'-0"

Brown AND Caldwell

PORTLAND, OREGON

SUBMITTED: PROJECT MANAGER DATE: 5/30/14

APPROVED: BROWN AND CALDWELL DATE: 5/30/14

LINE IS 2 INCHES AT FULL SIZE (IF NOT 2" - SCALE ACCORDINGLY)

DESIGNED: JFH
DRAWN: REK
CHECKED: EJF
CHECKED: RMG
APPROVED: DWL

EXTERNAL REFERENCE FILES

City of Washougal

REVISIONS

| ZONE | REV. | DESCRIPTION | DATE |
|---|---|---|---|
| | | | |

CONFORMED DOCUMENT

FOR SIGNATURE AND SEAL
SEE CONTRACT DOCUMENTS

CITY OF WASHOUGAL
2014 WWTP IMPROVEMENTS
STRUCTURAL

STORMWATER DECANT FACILITY SECTIONS

FILENAME
DECANT FACILITY.RVT

BC PROJECT NUMBER
144581

SCALE
AS INDICATED

DRAWING NUMBER
S-220

SHEET NUMBER
89 OF 212

Plot Date/Time: 9/23/2015 4:33:46 PM CAD: REK

Path: P:\144581 Washougal WWTP Phase 2\CAD\12-BIM\Decant Facility.rvt

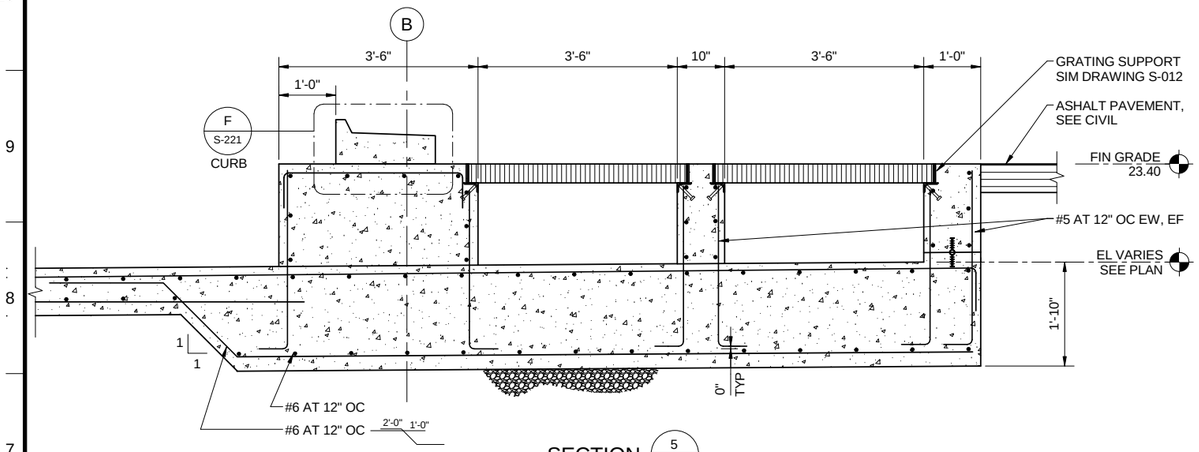


SECTION 5 / S-200

SCALE: 3/4" = 1'-0"

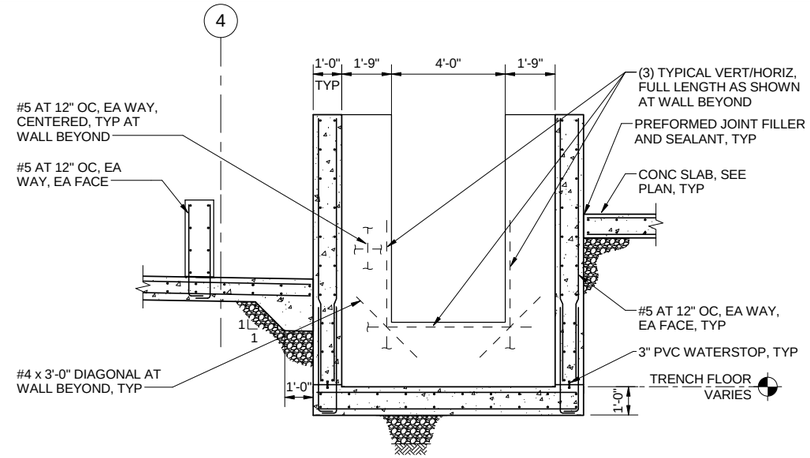


CENTRAL SUMP

DETAIL A / S-220

SCALE: 3/8" = 1'-0"

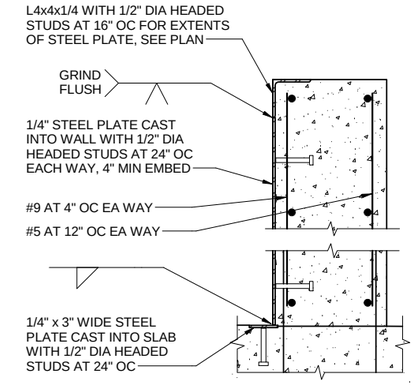


EMBED PLATE DETAIL

DETAIL B / S-200

SCALE:1 1/2" = 1'-0"

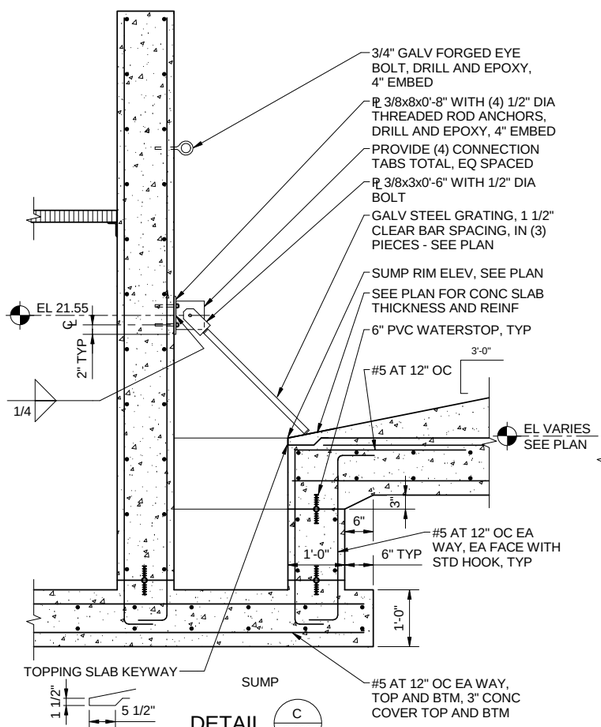


SUMP

DETAIL C / S-220

SCALE: 3/4" = 1'-0"

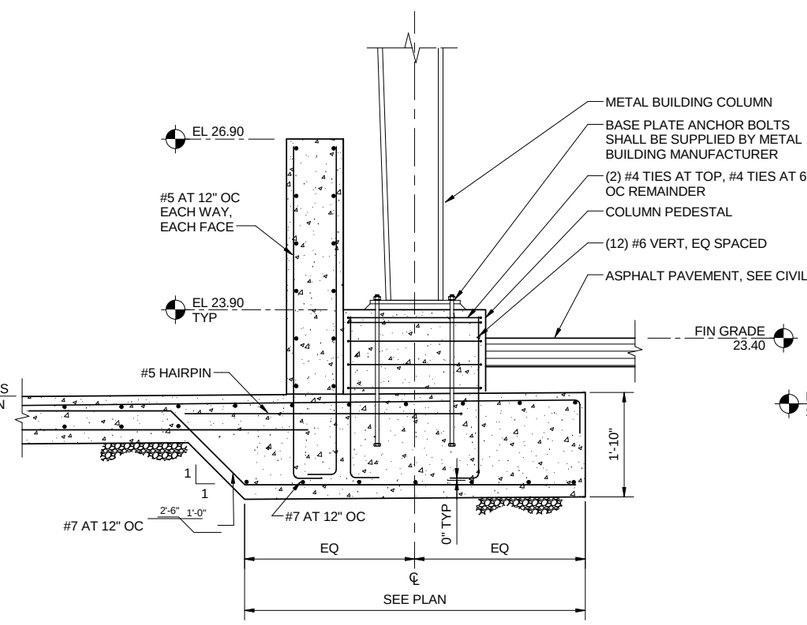


FOOTING AT PEDESTAL

DETAIL D / S-220

SCALE: 3/4" = 1'-0"

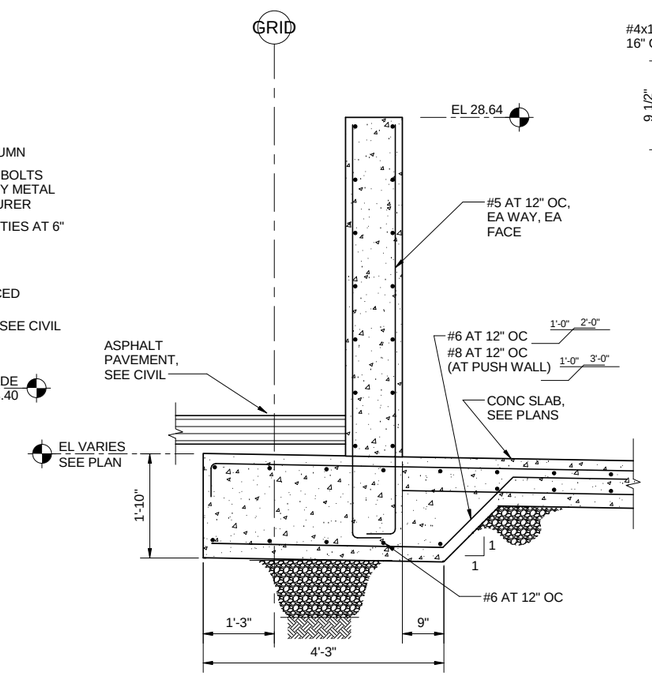


TYPICAL WALL AND FOOTING

DETAIL E / S-220

SCALE: 3/4" = 1'-0"

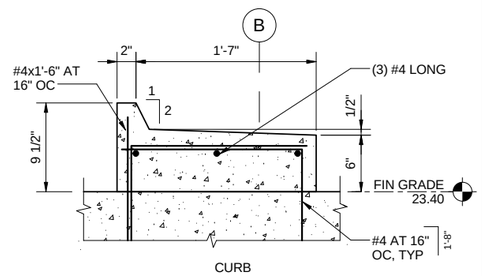


CURB

DETAIL F / S-221

SCALE:1 1/2" = 1'-0"

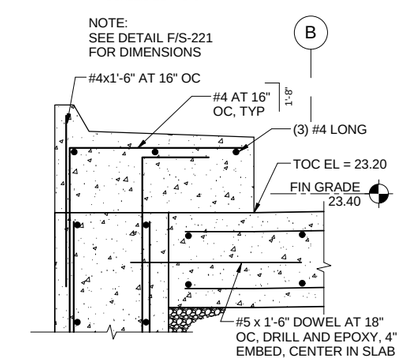


CURB

DETAIL G / S-220

SCALE:1 1/2" = 1'-0"

Brown AND Caldwell

PORTLAND, OREGON

SUBMITTED: PROJECT MANAGER DATE: 5/30/14

APPROVED: BROWN AND CALDWELL DATE: 5/30/14

LINE IS 2 INCHES AT FULL SIZE (IF NOT 2" - SCALE ACCORDINGLY)

DESIGNED: JFH
DRAWN: REK
CHECKED: EJF
CHECKED: RMG
APPROVED: DWL

EXTERNAL REFERENCE FILES

City of Washougal

REVISIONS

| ZONE | REV. | DESCRIPTION | DATE |
|---|---|---|---|
| | | | |

CONFORMED DOCUMENT

FOR SIGNATURE AND SEAL
SEE CONTRACT DOCUMENTS

CITY OF WASHOUGAL
2014 WWTP IMPROVEMENTS

STORMWATER DECANT FACILITY SECTIONS AND DETAILS

FILENAME: DECANT FACILITY.RVT
BC PROJECT NUMBER: 144581
SCALE: AS INDICATED
DRAWING NUMBER: S-221
SHEET NUMBER: 90 OF 212

Plot Date/Time:9/23/2015 4:33:47 PM CAD: REK
Path: P:\144581 Washougal WWTP Phase 2\CAD\12-BIM\Decant Facility.rvt

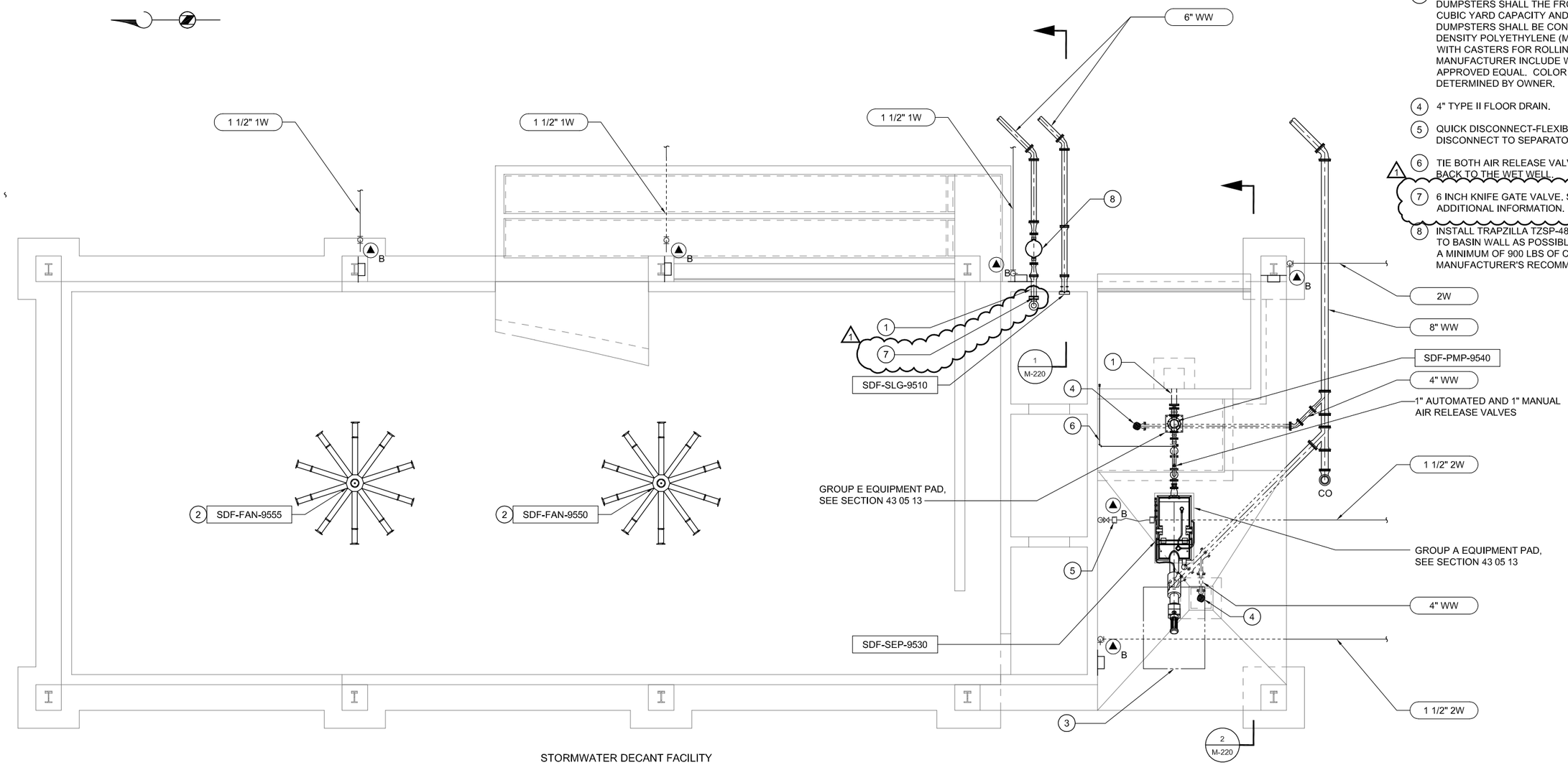


STORMWATER DECANT FACILITY

PLAN

SCALE: 3/16" = 1'-0"

## KEY NOTES:

1. TYPE G PIPE PENETRATION.
2. YOKE MOUNTED CIRCULATOR FAN. ATTACH TO PRE-ENGINEERED METAL BUILDING (PEMB) FRAME PER MANUFACTURER'S RECOMMENDATIONS. COORDINATE CONNECTION INFORMATION WITH PEMB DEFERRED SUBMITTAL PACKAGE. SEE SECTION 23 34 23 FOR ADDITIONAL INFORMATION.
3. PROVIDE TWO SCREENINGS STORAGE DUMPSTERS. DUMPSTERS SHALL THE FRONT LOADING TYPE WITH 3 CUBIC YARD CAPACITY AND MAXIMUM HEIGHT OF 64". DUMPSTERS SHALL BE CONSTRUCTED OF MEDIUM DENSITY POLYETHYLENE (MDPE) AND BE PROVIDED WITH CASTERS FOR ROLLING. CANDIDATE MANUFACTURER INCLUDE WRPC, HYBRID MODEL, OR APPROVED EQUAL. COLOR SELECTIONS TO BE DETERMINED BY OWNER.
4. 4" TYPE II FLOOR DRAIN.
5. QUICK DISCONNECT-FLEXIBLE HOSE-QUICK DISCONNECT TO SEPARATOR.
6. TIE BOTH AIR RELEASE VALVES TO A 1" LINE ROUTED BACK TO THE WET WELL.
7. 6 INCH KNIFE GATE VALVE. SEE SECTION 40 29 45 FOR ADDITIONAL INFORMATION.
8. INSTALL TRAPZILLA TZSP-48 SAMPLING WELL AS CLOSE TO BASIN WALL AS POSSIBLE. ENCASE THE WELL WITH A MINIMUM OF 900 LBS OF CONCRETE PER MANUFACTURER'S RECOMMENDATIONS.

Brown AND Caldwell

PORTLAND, OREGON

SUBMITTED: _____ DATE: _____
PROJECT MANAGER

APPROVED: _____ DATE: _____
BROWN AND CALDWELL

LINE IS 2 INCHES AT FULL SIZE (IF NOT 2" - SCALE ACCORDINGLY)

DESIGNED: NEB
DRAWN: DRP
CHECKED: GDH
CHECKED: RMG
APPROVED: DWL

EXTERNAL REFERENCE FILES

City of Washougal

| REVISIONS | | | |
|---|---|---|---|
| ZONE | REV. | DESCRIPTION | DATE |
| | 1 | ADDENDUM NO. 2, ITEM 12 | 8/08/14 |

CONFORMED DOCUMENT

FOR SIGNATURE AND SEAL
SEE CONTRACT DOCUMENTS

CITY OF WASHOUGAL
2014 WWTP IMPROVEMENTS
MECHANICAL

STORMWATER DECANT FACILITY
PLAN

FILENAME 144581-SF-M-201.DWG
BC PROJECT NUMBER 144581
SCALE AS SHOWN
DRAWING NUMBER M-201
SHEET NUMBER 121 OF 213

Path: P:\144581 Washougal WWTP Phase 2\CAD\2-Sheets\M-Mechanical
Plot Date/Time: 9/18/2015 3:56 PM CAD: persson, doug

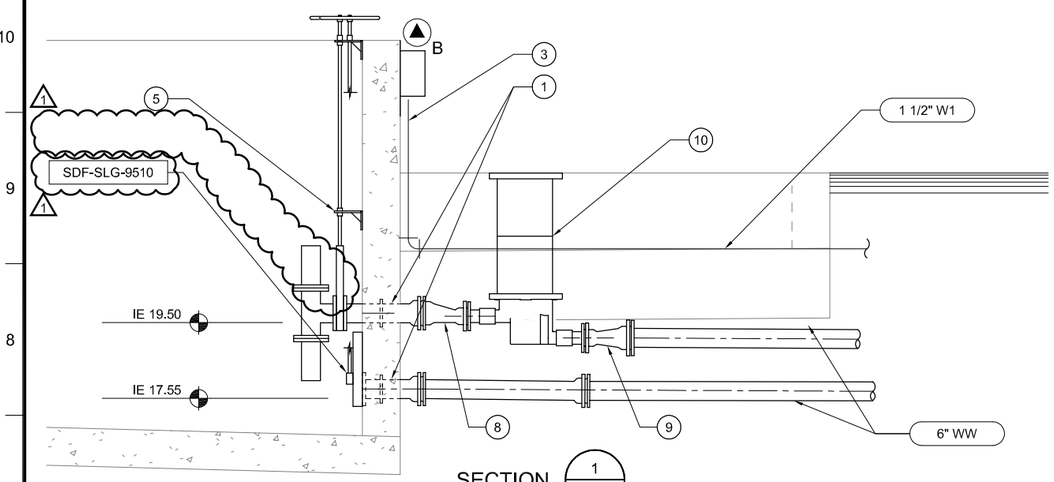


SECTION 1 / M-201

SCALE: 1/2"=1'-0"

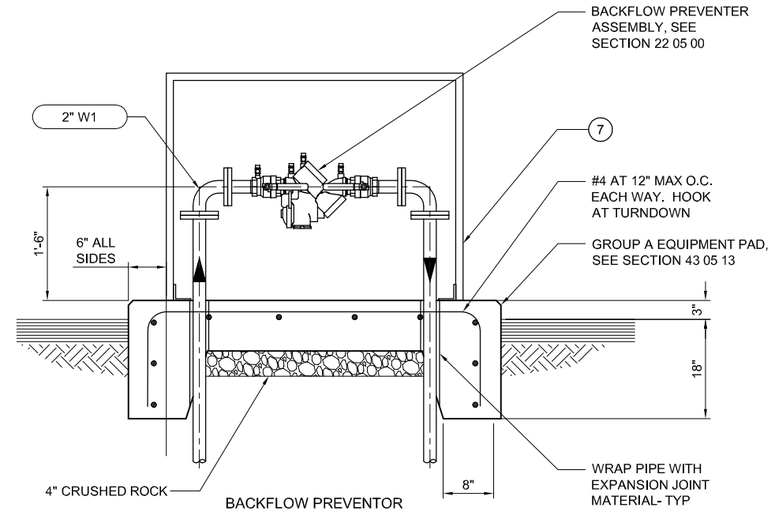


BACKFLOW PREVENTOR

DETAIL A / C-102

SCALE: 1"=1'-0"

## KEY NOTES:

1. TYPE G PIPE PENETRATION, SEE DWG M-006.
2. 4" TYPE II FLOOR DRAIN.
3. PROVIDE FREEZE PROOF YARD HYDRANT PER DETAIL B/M-008. AT THE DISCHARGE, PROVIDE 1 1/2" X 3/4" REDUCER AND FLEXIBLE PIPING OF APPROPRIATE LENGTH FOR CONNECTING TO THE PACKAGED SEPTAGE RECEIVING EQUIPMENT. FLEXIBLE PIPING SHALL BE REINFORCED RUBBER RATED FOR 125 PSI MINIMUM.
4. TYPE A PIPE PENETRATION, SEE DWG M-006.
5. STEM GUIDE, SEE DETAIL F/M-008.
6. TIE BOTH AIR RELEASE VALVES TO A 1" LINE ROUTED BACK TO THE WET WELL.
7. "HOT BOX" STYLE HEATED ENCLOSURE. SEE SECTION 22 05 00.
8. 6'x4" ECC. REDUCER.
9. 6"X4" CONCENTRIC REDUCER.
10. TWO ECA-TZ-29 EXTENSION COLLARS WILL BE REQUIRED TO BRING THE LID TO THE SURFACE.

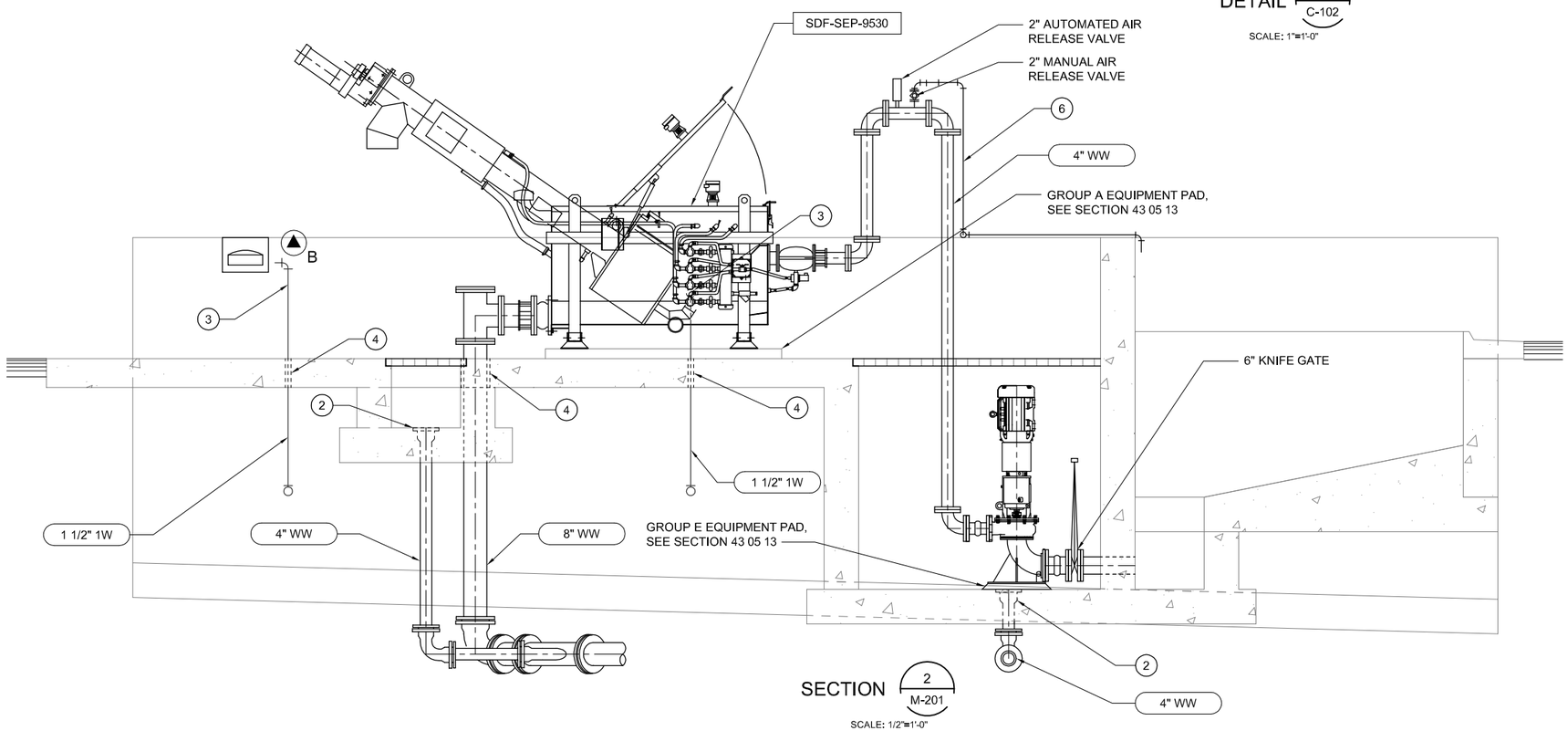


SECTION 2 / M-201

SCALE: 1/2"=1'-0"

| | | | |
|---|---|---|---|
| Brown AND Caldwell<br>PORTLAND, OREGON<br>SUBMITTED: _____ DATE: _____ PROJECT MANAGER<br>APPROVED: _____ DATE: _____ BROWN AND CALDWELL | LINE IS 2 INCHES AT FULL SIZE (IF NOT 2" - SCALE ACCORDINGLY)<br>DESIGNED: NEB<br>DRAWN: DRP<br>CHECKED: GDH<br>CHECKED: RMG<br>APPROVED: DWL | EXTERNAL REFERENCE FILES | City of Washougal |

REVISIONS

| ZONE | REV. | DESCRIPTION | DATE |
|---|---|---|---|
| | 1 | ADDENDUM NO. 2, ITEM 13 | 8/08/14 |

CONFORMED DOCUMENT

FOR SIGNATURE AND SEAL SEE CONTRACT DOCUMENTS

CITY OF WASHOUGAL
2014 WWTP IMPROVEMENTS
MECHANICAL

STORMWATER DECANT FACILITY SECTIONS

FILENAME 144581-SF-M-220.DWG
BC PROJECT NUMBER 144581
SCALE AS SHOWN
DRAWING NUMBER M-220
SHEET NUMBER 122 OF 213
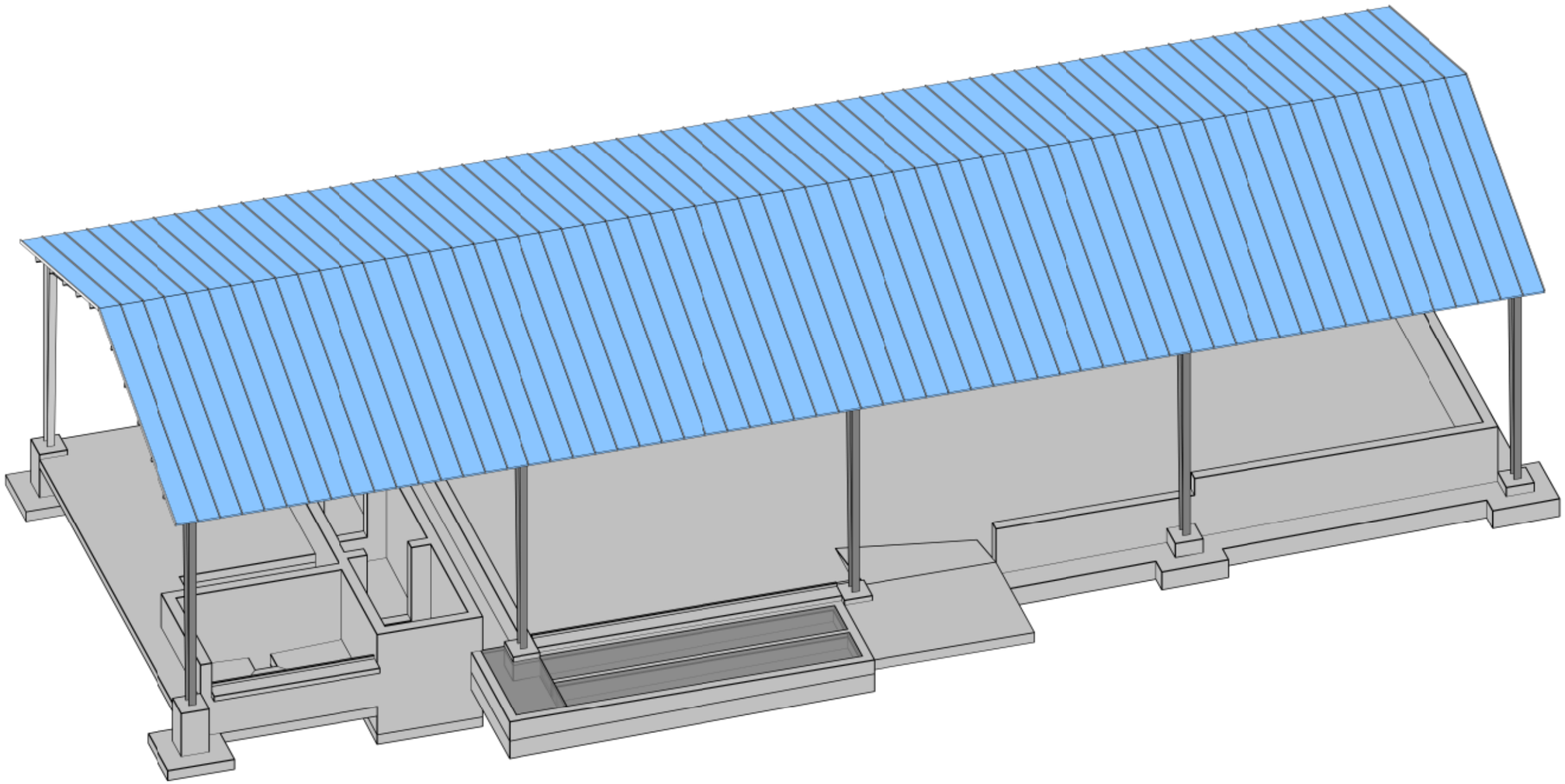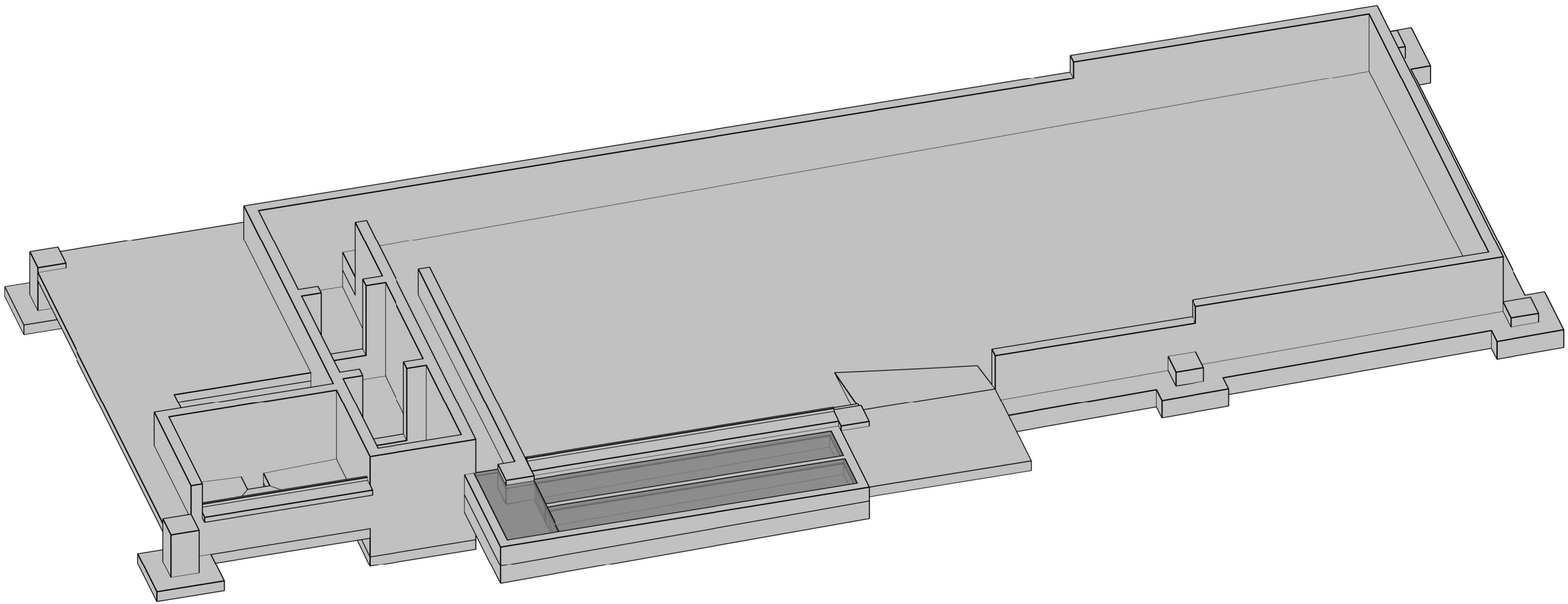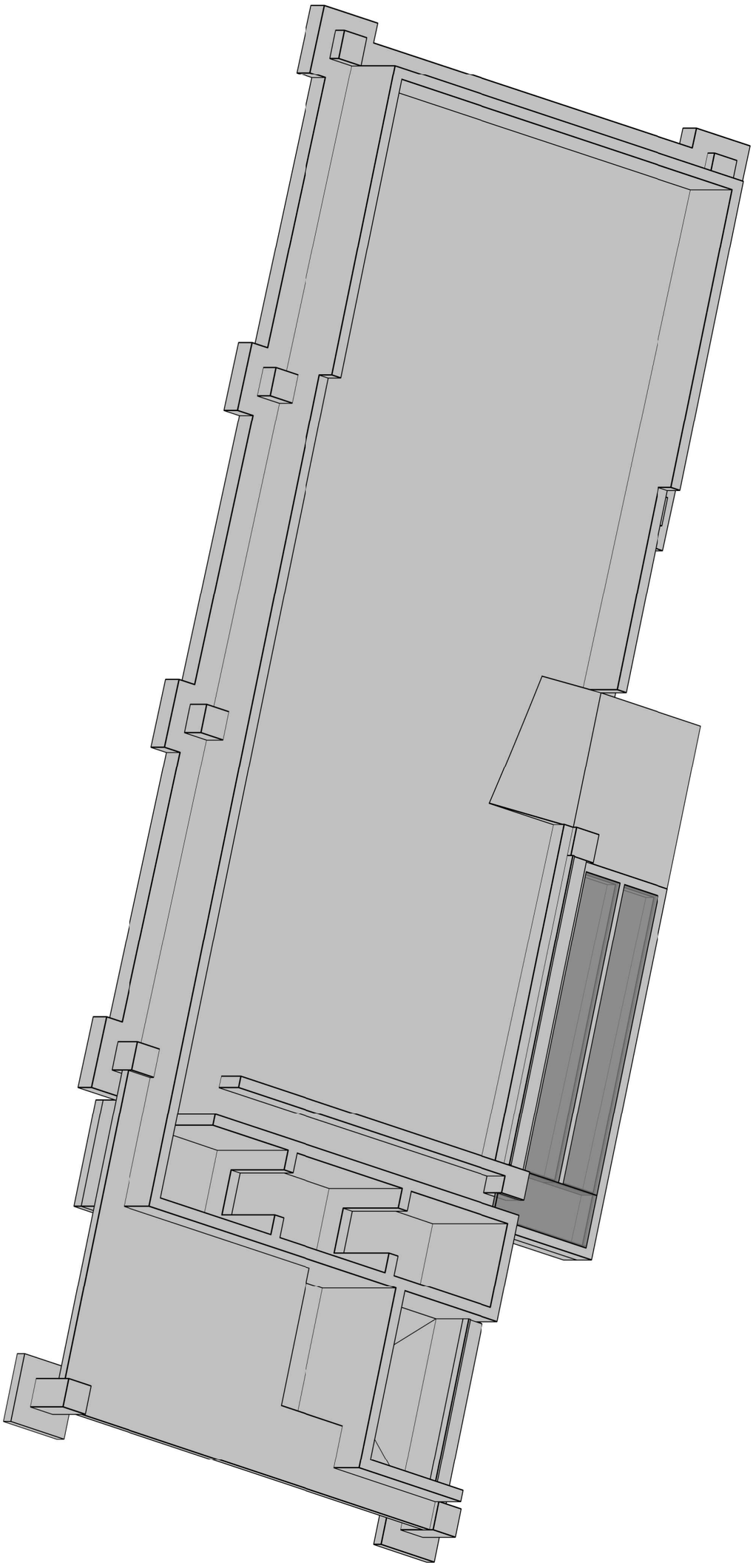
Path:P:\144581 Washougal WWTP Phase 2\CAD\2-Sheets\M-Mechanical Plot Date/Time: 9/18/2015 3:55 PM CAD: persson, doug