Clark County Stormwater Manual 2015
Errata Sheet #1
September 2016

Below is a summary of changes required to the *Clark County Stormwater Manual 2015* adopted on November 24, 2015 (effective January 8, 2016). These changes have been adopted by Board of County Councilors at a public hearing in November 22, 2016.

No.	Book	Section	Page	Change
1	All		All	Add Errata date stamp with Errata September 2016
2	All		throughout	Update references to web links from "…/~~environmental services~~/….." to "…./public-works/…."
3	All	Multiple	Throughout	Add the following line to blank pages with no text: "This page intentionally left blank"
4	1	1.2.3	10	Line 2 – Update reference "Chapter 7 of ~~this book~~" to "Chapter 7 of Book 2"
5	1	1.5.4	24	Line 9 – Update reference "Section 7.~~6~~" to "Section 7.7"
6	1	1.5.5	24	Line 14 – Update reference "Section 1.5.7~~.1~~" to "Section 1.5.7"
7	1	1.6.1	36	Line 18 – Update reference "~~Book 2, Chapter 9~~" to "referenced in Book 2 Introduction"
8	1	1.6.3	42	Line 4 – Add "No new development, redevelopment, or drainage project shall be allowed to materially increase or concentrate stormwater runoff onto an adjacent property or block existing drainage from adjacent lots."
9	1	1.6.4.1	42	Line 9 – Update reference "Section 7.~~6~~" to "Section 7.7"
10	1	1.6.6	43	Line 10 – Add "All private stormwater facilities that are gated and locked are required to have a double locking system for inspection purposes. It is preferred to use a chain with a county lock and the private lock."
11	1	1.8.2	53	Line 20 (second paragraph) – Replace the word "~~Preliminary~~" with "Final"
12	1	1.8.2.3	58	Line 8 – Remove the word "Chapter" from "CCC ~~Chapter~~ 40.386"
13	1	1.8.2.3	60-61	Bullet list numbers 7-13 should be updated and renumbered to include the appropriate subordinate list for analysis (a.-d.)
14	1	1.8.2.3	62	Lines 18-23 - Remove the word "Chapter" from "CCC ~~Chapter~~ 40."

DRAFT v. 9.8.16

No.	Book	Section	Page	Change
15	1	1.8.2.3	63	Update sections titles to eliminate duplicate Sections D.3 (update to D.4 and D.5)
16	1	TOC	77	Update references under 2.3 to create the correct subordinate sequence
17	1	2.2	80	Line 22 – Change the first word of the bullet from "~~Meeting~~" to "Meet"
18	1	Table 2.3	84	Heading of table 2.3, remove "~~subject to Minimum Requirement #1 - #9~~"
19	1	2.3.X	85-89	Subheadings – Change "2.3.1.X" to the next higher level of headings "2.3.X" under Section 2.3
20	1	2.5.5	105	Line 17 – Add "BMP T5.15" to heading
21	1	3.2.3.6	129	Update reference to *Combined Detention and Wetpool Facilities* should be to BMP D6.40 instead of ~~T10.40~~.
22	1	3.4.5.2	138	Update references from ~~T10.40~~ to D6.40.
23	1	3.4.5.3	139	Update reference from ~~T10.40~~ to D6.40
24	1	4.3.2.1	151	Line 13 – Correct the requirement from "~~or~~" to "and".
25	1	6.3.4.1	174	Line 28 – Update reference for precipitation data from Ecology's SWMMWW "~~Volume III"~~ to "Book 2 Appendix 2-A"
26	1	6.4.9	183	Line 16 – Update reference from Book 4 to Book 3
27	1	Append. C	C-5	Line 1 – Update equation to bracket the first half of the formula
28	1	Append. E	E-1	Line 6 – add reference to Book 1
29	1	Append. E	E-1	Section 1 – update ~~3~~.1 to 2.1
30	1	Append. E	E-1	Section 1 – update ~~3~~.2 to 2.2
31	1	Append. E	E-1	Section 1 – update ~~3~~.3 to 2.3
32	1	Append. H	H-1	Update Guide Sheet 1, last paragraph to reference Figure 1.4 instead of Figure 1.~~5~~
33	1	Append. H	H-5	In the Minimum Requirement 8 Checklist, Item B., update the reference from Appendix 1-~~K~~ to Appendix 1-H
34	1	Append. H	H-5	Add the following question to the Checklist: "Does the wetland provide habitat for threatened or endangered species? If yes complete the checklist below. If No Stop." Update the question bullets to change existing ~~D~~ to E and existing E to F.

DRAFT v.9.16

No.	Book	Section	Page	Change
35	1	Append. I	I-8	Lines 15 & 18 – Update groundwater assessment to "groundwater depth assessment"
36	1	Append. I	I-8	Lines 15 & 16 – add ", downspout full infiltration or rain garden" after the word pavement.
37	1	Append. I	I-11	Lines 15 & 16 – add to requirement: "No new development, redevelopment, or drainage project shall be allowed to materially increase or concentrate stormwater runoff onto an adjacent property or block existing drainage from adjacent lots."
38	1	Append. I	I-14	Eliminate Box 1.; change box ~~2.~~ To 1.; change box ~~3.~~ to 2.; change box ~~4.~~ to 3.; second orange box – Eliminate text "~~OR (optional) go to next question~~" as well as the dotted line to the No line; change box ~~5~~. to 4 and eliminate "~~and 2~~. "; change box ~~6.~~ to 5.; change box ~~7.~~ to 6.; and, change box ~~8.~~ to box 7.
39	1	Append. I	I-15	Eliminate Box 1 and update formatting (65% of site set aside as native vegetation?)
40	1	Append. I	I-32	Fix formatting - Under the applicant line, eliminate the second line
41	1	Append. I	I-66	Fix formatting – eliminate the underline for "Users may reference the handbook"
42	1	Append. I	I-66	Replace bullets with numbers for 1-7
43	1	Append. I	I-74	Lines 33 & 34 – Eliminate references to Section 2.5.5.3 in Book 2 and Table 2.3. Replace with "…infeasibility criteria below."
44	2	1.3.1.1	8	Line 10 – Change reference from 1.5.~~2~~.2 to 1.5.5.2
45	2	BMP T5.10A	22	Line 19 – Change spelling of "co~~u~~rse sands" to "coarse sands"
46	2	BMP T5.10D	33	Line 8 – Add the following to the limitations section: "Perforated stub outs do not provide pretreatment. Perforated stub outs are not allowed to drain into a subsurface detention or retention facility without first connecting to a pretreatment BMP under Minimum Requirement #6."
47	2	BMP T5.11	37	Line 27 – update reference to include punctuation: BMP T5.10C
48	2	BMP T5.13	43	Lines 13 & 14 – Update outdated reference from ~~BMP 7.30~~ to BMP 5.14B; also eliminate an extra space after the closing parentheses.
49	2	BMP T5.14B	66 & 68	Line 8 – Update B~~MS~~ to BSM Lines 18-23 – remove existing bullet information [~~"If~~

DRAFT v. 9.8.16

No.	Book	Section	Page	Change
				~~the standard soil mix is used:…..~~”] and replace with “Option 1: If using the Bioretention Soil Mix recommended herein, the WWHM assumes a default infiltration rate of 12 inches per hour (15.24 cm/hr).” Lines 24-33 – remove existing bullet information [“~~If a custom soil mix is used….~~”] and replace with “Option 2: If creating a custom bioretention soil mix, Use ASTM D 2434 Standard Test Method for Permeability of granular Soils (Constant Head) with a compaction rate of 85 percent using ASTM D1557 Test Method for Laboratory Compaction Characteristics of Soil Using Modified Effort. The WWHM user must enter the derived value into WWHM using “View/Edit Soil Types” pull down menu and adjusting the Ksat value. After selecting option 1 or 2 above, determine the appropriate safety factor for the saturated hydraulic conductivity (Ksat). If the contributing area of the bioretention cell or swale is equal to or exceeds any of the following limitations: 5,000 square feet of pollution-generating impervious surface; 10,000 square feet of impervious surface; ¾ acre of lawn and landscape, use 4 as the infiltration rate (Ksat) safety factor. If the contributing area is less than all of the above areas, or if the design includes a pretreatment device for solids removal, use 2 as the Ksat safety factor. The WWHM has a field for entering the appropriate safety factor.”
50	2	BMP T5.15	77	Line 11 – Update reference for 2.5.3 Book ~~2~~ to Book 1. Line 13 – Replace bullet text “~~No run-on from pervious surfaces is allowed.~~” with “Run-on from pervious surfaces is not allowed, except from minor or incidental pervious areas that cannot be directed elsewhere. Those areas must be fully stabilized before discharging runoff to the pervious pavement.”
51	2	BMP T5.30A	100	Line 10 – Update reference in cross-reference table to add “Book 1” to Section 2.5.3.
52	2	BMP T5.30B	109	Line 9 - Update reference in cross-reference table to add “Book 1” to Section 2.5.3.
53	2	BMP T5.30B	110	Line 22 – Update reference to include proper notation for “BMP T5.30A”

DRAFT 9.9.16

No.	Book	Section	Page	Change
54	2	BMP T5.40	113	Line 21 - Update reference to include proper notation for "BMP T5.30A"
55	2	BMP T5.40	114	Line 8 – Update reference Figure from ~~9.11~~ to 1.14 in Book 1
56	2	BMP T5.41	116	Line 1 – Add notation for the continuance of the cross reference table from the previous page.
57	2	BMP T8.10	165	Update Figure reference from ~~Plan~~ view to Section view.
58	2	BMP T8.30	172	Line 13 – Update reference for BMP 9.40 to T9.40
59	2	BMP T9.10	200	Line 13 – Update reference from BMP ~~T7.30~~ to 5.14B
60	2	BMP T7.40	215	Line 15 – Update reference from BMP ~~T7.30~~ to 5.14B
61	2	BMP 7.40	216	Line 2 - Update reference from BMP ~~T7.30~~ to 5.14B
62	2	BMP 10.10	221	Line 9 – Update referenced figures from ~~4.27 and 4.28~~ to 4.26 and 4.27
63	2	5.1.1	250	After Line 6 – Add a new bullet: "Reference BMP D6.10 and BMP 6.20 for landscape requirements at stormwater facilities."
64	2	5.1.1.3	251	Line 16 – Update the first sentence: "~~A facility to treat~~ Pretreatment of stormwater influent for suspended solids ~~must precede the~~ is required for each infiltration facility."
65	2	BMP D.610	282	After line 4 – Add bullet: "10. Ensure that mature width of plants are taken into consideration near access roads, pedestrian walkways or manmade structures. To reduce safety and maintenance liabilities, mature plant width should not overhang or encroach into these features."
66	2	BMP D6.20	287	After line 6 – Add new section: "**Landscaping** 1. Refer to BMP D6.10 for landscape requirements, as well as statements listed below. 2. Plantings directly above the detention tank system shall include only shallow rooted herbaceous perennials, low growing shrubs or grasses. Trees and shrubs should be avoided to minimize risk of roots impeding storage volume and capacity, as well as structural integrity of the system. Plantings should not include varieties that are water seeking such as sedges or rushes. 3. Avoid any

DRAFT V.9.8.16

No.	Book	Section	Page	Change
				plantings around the perimeter of detention tank that will cause root encroachment into the tank storage area. Large trees should be planted a minimum of 10' from edge of detention tank storage area."
67	2	BMP D6.40	300	Line 13, second bullet – Update reference from 6.1.~~7~~ to 6.1.4
68	2	7.2	303	Add last bullet: No new development, redevelopment, or drainage project shall be allowed to materially increase or concentrate stormwater runoff onto an adjacent property or block existing drainage from adjacent lots.
69	2	BMP C209	400	Line 15 – Update reference from Section 7.~~6~~ to 7.7
70	2	Appendix C	C-4	Line 16 – Update reference from "BMP T5.10~~B~~ of ~~Volume III - Chapter 3~~" to "BMP T5.10C of Book 2"
71	2	Appendix C	C-4	Lines 34 & 36 – Update reference for BMPs in the last bullet from "Book ~~1~~" to "Book 2"
72	2	Appendix C	C-13	Lines 26 & 27 – Update reference "explained in Book 1, Section 2.~~2.1.~~3" and "Book 1, Section ~~4.3.1.3~~" to "Book 1, Section 2.3.1.4"
73	2	Appendix C	C-14	Line 7 – Update reference from BMP T5.10~~B~~ to C
74	2	Appendix C	C-15	Lines 9 & 13 – Add a period at the end of the sentences.
75	2	Appendix D	D-1	Line 6 – Update reference from "See Appendix 1-~~D~~" to "See Appendix 1-C"
76	2	Appendix D	D-1	Line 20 – Update reference for Site Characterization Study from "Section 4.~~4~~" to "Book 1, Section 4.3.1.2"
77	2	Appendix D	D-1	Line 25 – Add "Book 1," to reference of Section 4.4, Table 4.1
78	2	Appendix D	D-1	Line 26 – Update reference for CARA sites from "Section 4.~~2.2~~" to "Section 4.3.1.1"
79	2	Appendix D	D-2	Line 24 – Update reference for coefficient of permeability from "Section 4.~~5.2~~" to "Section 4.3.1.3"
80	2	Appendix D	D-2	Line 25 – Update reference for correction factors from "Section 4.~~5.4~~" to "Section 4.3.1.3"
81	3	2.1.3	9	Figure 2.1 - Picture caption – Left justify Source information and update to correct reference "Source: Fresh Look Mobil Power Wash"

DRAFT v.9.9.16

No.	Book	Section	Page	Change
82	3	2.1.3	10	Line 32 – Update reference to metal medallion from "Book ~~2~~, Figure ~~9.1~~" to "Book 1, Figure 1.5"
83	3	2.1.4	11	Figure 2.2 – Update photo source to correct source: "Source: Brady Worldwide"
84	3	S412	47	Line 28 – Update references from "Figures 2.~~6~~ and 2.~~6~~" to "Figures 2.7 and 2.8"
85	3		52	Eliminate duplicate statement: "~~This page intentionally left blank.~~"
86	3	S419	63	Line 29 – Update statement "…..or cover~~ing~~ the storm…"
87	3	S426	79	Figure 2.11 – Update photo source to correct source: "Source: Brady Worldwide"
88	3	Appendix 3-A	A-17	Line 15 – Insert tab to properly align "Commercial Car and Truck Washes"
89	3	Appendix 3-E	E-1	Second to last line – Update reference from "Table ~~G~~.6" to "Table E.6"
90	4		6	Line 10 – Update "Biofiltration wale" to "Biofiltration swale"
91	4	Detention Pond	44	Lines 23 and 24 – Update the word "~~Tree~~" to "Vegetation" to clarify that all vegetation should be inspected to minimize impact to inspection access
92	4	Closed Detention System	73 & 74	After Line 44, add a new row in the table: "Vegetation Encroachment - Root encroachment of tree or shrub have impacted function or integrity of wetvault. - Roots are found in vault to be removed and repair vault."
93	4	Wet Vault	77	After Line 31, add a new row in the table: "Vegetation Encroachment - Root encroachment of tree or shrub have impacted function or integrity of wetvault. - Roots are found in vault to be removed and repair vault."
94	4	Modular Detention Systems	79	After Line 41, add a new row in the table: "Vegetation Encroachment - Root encroachment of tree or shrub have impacted function or integrity of wetvault. - Roots are found in vault to be removed and repair vault."
End of summary				

DRAFT v.9.8.16

Clark County Stormwater Manual 2015

November 24, 2015

ERRATA v. strikeout/underline (September 2016)

Clark County Stormwater Manual 2015

Introduction to the Manual

November 24, 2015

ERRATA v. strikeout/underline (September 2016)

Acknowledgements

Development of the *Clark County Stormwater Manual* was a team effort between Clark County, citizens of Clark County and consultant services. The Clark County ~~Environmental Services~~ Public Works Department recognizes organization and individuals (both past staff and present) who participated in the development of this manual.

Board of Clark County Councilors

Marc Boldt, Chair
David Madore~~, Chair~~
Tom Mielke
Jeanne E. Stewart
Julie Olson

Clark County Staff

~~Don Benton, Environmental Services Director~~
Dean Boening, Resource Policy and Planning Manager
Rod Swanson, NPDES Stormwater Permit Manager
Jeff Schnabel, Capital Infrastructure Manager
Brent Davis, Permitting Services Manager
Cary Armstrong, Pollution Source Control Specialist
Chad Hoxeng, Monitoring Specialist
Fereidoon Safdari, Engineer
Jane Tesner Kleiner, Resource Program Coordinator
~~Bobbi Trusty, Office Assistant~~

Marty Snell, Community Development Director
Jan Bazala, Planning
Chuck Crider, Permit Services Manager
Bryan Mattson, Permit Services
Jim Muir, Building Services Manager

Oliver Orjiako, Community Planning Director
Gordy Euler, Planning

Heath Henderson, Public Works Director
Tom Grange, Engineering & Construction Mngr.
Carolyn Heniges, Construction Supervisor
Ken Lader, Design Manager
John Milne, Engineer
Nikki Olsen, Sr. Engineering Technician
Ali Safayi, Development Engineering Lead
Dean Shaddix, Engineering Services Manager
~~Steve Schulte, Transportation & Asset Manager~~
Scott Wilson, Operations Superintendent

Christine Cook, Deputy Prosecuting Attorney

Holly Gilbert, Public Information Office

Jon Dunaway, Clark County Fire Marshall

Stakeholder Advisory Group (invited)

Val Alexander, Friends of Clark County
Doug Ballou, Neighborhood Associations Council of Clark County
Mike Bomar, Columbia River Economic Development Council
Jeff Breckel, Lower Columbia Fish Recovery
Barry Cain, Gramor Development
Dave Cone, Evergreen School District

Purpose

The *Clark County Stormwater Manual* 2015 (CCSM) is a single reference for all aspects of stormwater management that are regulated by Clark County. The manual is written to be equivalent to the *2012 Stormwater Management Manual for Western Washington*, as amended in December, 2014 (known as the 2014 SMMWW).

The manual is written for a broad audience, including engineers, developers, property owners, construction contractors, business operators, and County staff. The CCSM describes requirements for stormwater management on development and redevelopment sites and requirements for maintenance of facilities and control of stormwater pollutants at business sites, County facilities, government properties, subdivisions, and other areas where hard surfaces allow precipitation to run off. Two chapters of Clark County Code (CCC) adopt this manual's requirements (13.26A, Water Quality, and 40.386, Stormwater and Erosion Control).

The CCSM addresses requirements of Clark County's National Pollutant Discharge Elimination Systems (NPDES) Phase I municipal stormwater permit, issued by Washington Department of Ecology under the federal Clean Water Act. Compliance with this manual also addresses stormwater aspects of Clark County's Critical Areas code and the State Environmental Policy Act.

The requirements and Best Management Practices (BMPs) in this manual are intended to safeguard public health, safety and welfare by protecting the quality of surface water and groundwater for drinking water supply, recreation, fishing and other beneficial uses as described in the Clean Water Act, the Washington Water Pollution Control Act (Revised Code of Washington (RCW) 90.48 and Washington Administrative Code (WAC) 173-201A and 173-200).

Effects of Urbanization

As land is cleared and covered with impervious surfaces such as roofs and roads for urban, suburban and rural development, the way that rainfall runs off during precipitation events changes. Changes include:

- Increased volume of runoff
- Increased rate of flow of runoff
- Decreased time for runoff to reach natural receiving water
- Reduced groundwater recharge
- Increased frequency and duration of high stream flows and wetland inundation during and after wet weather
- Reduced stream flows and wetlands water levels during the dry season
- Greater stream velocities
- Increased types and quantities of pollutants carried to receiving waters by runoff

Clark County Stormwater Manual 2015

Book 1
Applicability, BMP Selection,
and Submittal

November 24, 2015

ERRATA v. strikeout/underline (September 2016)

- The discharge structure and conveyance system leading to it must have adequate capacity to meet the requirements of Chapter 7 of ~~this book~~ Book 2; or
- The project must detain runoff from the project site that exceeds the existing system's capacity.

- New development and redevelopment are exempt from Minimum Requirement #8, Wetlands Protection, provided that:
  - The project does not change the rate, volume, duration, or location of discharges to and from the project site (e.g. where existing impervious surface is replaced with other impervious surface having similar runoff-generating characteristics, or where pipe/ditch modifications do not change existing discharge characteristics), or
  - The project meets the land cover percentage requirements for full dispersion in accordance to this manual for flow control, or
  - The Responsible Official determines based on information in the Preliminary Stormwater Plan, or information submitted for wetland review per CCC 40.450, that the proposed project will not degrade wetland function.

1.2.4 Exemptions from County Requirements

Publicly-funded road-related development and drainage projects are exempt from Section 1.9, Administrative and Legal Requirements.

1.3 Definitions Related to the Minimum Requirements

Approved Continuous Flow Model – Where referenced in this document, this term applies to continuous simulation hydrologic models approved for use in Clark County by the Department of Ecology. The Western Washington Hydrology Model (WWHM) and MGSFlood are the only two approved models for use in Clark County.

Bioretention – Engineered facilities that treat stormwater by passing it through a specified soil profile and either retain or detain the treated stormwater for flow attenuation.

Certified Erosion and Sediment Control Lead (CESCL) – means an individual who has current certification through an approved erosion and sediment control training program that meets the minimum training standards established by the Washington Department of Ecology (Ecology). A CESCL is knowledgeable in the principles and practices of erosion and sediment control. The CESCL must have the skills to assess site conditions and construction activities that could impact the quality of stormwater and, the effectiveness of erosion and sediment control measures used to control the quality of stormwater discharges. Certification is obtained through an Ecology approved erosion and sediment control course. Course listings are provided online at Ecology's website.

1.5.3 Minimum Requirement #3: Source Control of Pollution

All known, available, and reasonable source control BMPs must be applied to all projects. Source control BMPs must be selected, designed, and maintained according to Book 3 of this manual.

1.5.4 Minimum Requirement #4: Preservation of Natural Drainage Systems and Outfalls

Natural drainage patterns shall be maintained, and discharges from the project site shall occur at the natural location, to the maximum extent practicable. The manner by which runoff is discharged from the project site must not cause a significant adverse impact to downstream receiving waters and down gradient properties. All outfalls require energy dissipation (see Book 2, Section 7.~~6~~7).

1.5.5 Minimum Requirement #5: On-site Stormwater Management

Projects shall employ On-site Stormwater Management BMPs in accordance with the following project thresholds, standards, and lists to infiltrate, disperse, and retain stormwater runoff on-site to the maximum extent feasible without causing flooding or erosion impacts.

Projects qualifying as flow control exempt in accordance with Section 1.5.7.~~1~~ do not have to achieve the LID Performance Standard, nor consider bioretention, rain gardens, permeable pavement, or full dispersion if using List #1 or List #2. However, those projects must implement the following BMPs, if feasible:

- BMP T5.13, Post-Construction Soil Quality and Depth, in Chapter 2 and Book 2, Chapter 2; and
- BMPs T5.10A or BMP T5.10B, Downspout Full Infiltration; BMP T5.10C, Downspout Dispersion; or BMP T5.10D, Perforated Stub-out Connections, in Chapter 2 and Book 2, Chapter 2; and
- BMPs T5.11, Concentrated Flow Dispersion; or T5.12, Sheet Flow Dispersion, in Chapter 2 and Book 2, Chapter 2.

1.5.5.1 Project Thresholds

Projects triggering only Minimum Requirements #1 – #5 shall either:

1. Use On-site Stormwater Management BMPs from List #1 for all surfaces within each type of surface in List #1; or

2. Demonstrate compliance with the LID Performance Standard. Projects selecting this option cannot use Rain Gardens. They may choose to use Bioretention BMPs as described in Chapter 2 and Book 2, Chapter 2 to achieve the LID Performance Standard. Projects selecting this option must implement BMP T5.13, Post-Construction Soil Quality and Depth, if feasible.

1.5.9 Minimum Requirement #9: Operation and Maintenance

A stormwater facility maintenance manual that includes the appropriate elements consistent with the provisions in Book 4 of this manual shall be submitted for proposed stormwater facilities and BMPs. The applicant shall identify the party (or parties) responsible for stormwater facility operation and maintenance. For privately owned facilities, a copy of the stormwater facility maintenance manual shall be retained on site or within reasonable access to the site and shall be transferred with the property to the new owner. For publicly owned facilities not maintained by the Clark County Public Works Department, a copy of the stormwater facility maintenance manual shall be retained in the appropriate department. A log of maintenance activity that indicates what maintenance activities were performed shall be kept and be available for inspection by Clark County.

1.6 Clark County Requirements

Clark County requirements in this section apply to all projects in addition to the Minimum Requirements described above.

1.6.1 Specifications

Stormwater facilities shall be constructed in accordance with the latest edition of the *Standard Specifications for Road, Bridge, and Municipal Construction* as prepared by the Washington Department of Transportation, with exception of Clark County standards as noted in the Clark County Standard Details ~~listed in Book 2, Chapter 9~~ referenced in Book 2 Introduction of this manual.

1.6.2 Facility Signage and Markers

All stormwater facilities, including catch basins and manholes, capable of accepting stormwater shall be signed or marked as described below. Locations of medallions and signs shall be shown on the Final Development Plan (see Section 1.8.2.2).

Inlets must be marked with a permanently-affixed "Protect water – Only Rain in the Drain" medallion near the inlet.

Figure 1.5: Stormwater Medallion (4" diameter)

1.6.3 Off-site Drainage Impacts

If the Responsible Official determines based on information in the Preliminary Stormwater Plan (see Section 1.8.1) that the proposed project will adversely impact off-site drainage systems, then the applicant shall implement additional flow control or other measures to mitigate those adverse impacts. No new development , redevelopment, or drainage project shall be allowed to materially increase or concentrate stormwater runoff onto an adjacent property or block existing drainage from adjacent lots.

1.6.4 Erosion Control

1.6.4.1 General Standards

- All outfalls require energy dissipation (See Book 2, Section ~~7.6~~ 7.7).
- Permanent infiltration BMPs shall not be used as temporary erosion control devices.
- Vehicles not performing a construction activity shall not be permitted off-street. Worker personal vehicles shall be parked on adjacent streets or other approved areas.

1.6.4.2 Underground Utility Construction

The construction of underground utility lines shall be subject to the following:

- BMPs shall be used to control erosion during and after construction.
- BMPs damaged during construction shall be replaced or repaired.

1.6.4.3 Signage

- Erosion control signage approved by the Responsible Official shall be installed at each point of entry on any development or redevelopment site subject to Minimum Requirement #2, as shown below.
- Removal of signage shall occur when either certificates of occupancy have been issued for seventy percent (70%) of the lots or there are less than ten (10) unoccupied lots remaining within the project site, whichever is later, or as determined by the Responsible Official.

Figure 1.15: Standard Clark County Erosion Control Sign (4' x 8')

1.6.5 On-going Maintenance

Maintenance of stormwater facilities shall be to the standards in Book 4 of this manual pursuant to CCC 13.26A.

1.6.6 Stormwater Facility Access

All stormwater facilities must allow for access by standard maintenance equipment and vehicles needed to remove sediment and maintain structures in accordance with the standards of this manual. Maintenance access must be provided using a minimum of a 10-foot wide roadway constructed using an all-weather surface or an alternative surface type approved by the county; the responsible office may waive this requirement where a road is not necessary for accessing the facility. Access criteria for specific BMPs are given in Book 2.

All private stormwater facilities that are gated and locked are required to have a double locking system for inspection purposes. It is preferred to use a chain with a county lock and the private lock.

1.7 Submittals for Small Projects

A Stormwater Site Plan is required for all new development and redevelopment projects that must comply with Minimum Requirement #1. The submittal requirements described in this section apply to development and redevelopment sites that qualify as small projects. A small project is defined as a development or redevelopment site that meets all of the following criteria:

1. Triggers Minimum Requirements #1 – #5.
2. Is less than one acre.
3. Does not construct a public road.
4. Does not require an Engineering Approval.

- Critical Aquifer Recharge Areas. If the site lies within a Category I or II critical aquifer recharge area (CARA), a map is required showing the extent of these areas in relation to the site. See CCC 40.410 for CARA regulations.
- Floodplains. If a floodplain mapped by the Federal Emergency Management Agency (FEMA) exists on or adjacent to the site, a map showing the floodplain is required. See CCC 40.420 for Flood Hazard Areas regulations.
- Shoreline Management Area. If the site contains or is adjacent to a water body regulated under the Washington Shorelines Management Act, a map showing the boundary of the shoreline management area in relation to the site is required. See CCC 40.460 for Shoreline Management Area regulations.

Other Submittals

1. Soils Report: See Section 1.8.3.

1.8.2 Final Stormwater Plan

In accordance with Minimum Requirement #1, the Final Stormwater Plan provides final engineering design and construction drawings for the stormwater aspects of a proposed new development or redevelopment project. The Final Stormwater Plan shall be submitted and approved by the Responsible Official before construction of the development can begin.

All plans, studies, and reports that are part of the Final Stormwater Plan shall be signed and dated by the professional civil engineer(s) (registered in the state of Washington), or other qualified professional as designated in this manual, responsible for the preparation of the ~~Preliminary~~ Final Stormwater Plan and its components.

The goal of the Final Stormwater Plan submittal is to allow the Responsible Official to review the following:

1. Any easements, covenants, or agreements necessary to permit construction and maintenance, including for each on-site stormwater management BMP.

2. Design details, figures, and maintenance instructions for each post construction Stormwater Management BMP. These documents must be suitable to serve as a recordable document that can be attached to a declaration of covenant and grant of easement associated with each lot.

3. Final engineering plans that provide sufficient detail to allow construction of the stormwater facilities. These plans shall be stamped, signed, and dated by the engineer(s), registered in the state of Washington, responsible for hydrologic, hydraulic, geotechnical, structural and general civil engineering design and by the project engineer responsible for the preparation

3. Complete a detailed analysis and design of all proposed runoff treatment system elements, in accordance with Book 2, Chapters 3 and 4. Reference runoff treatment system elements to labeled points shown on the site location map or final development plan.

4. Include and reference all computations, equations, charts, nomographs, detail drawings, and other tabular or graphic aids used to design water quality system elements in the technical appendix.

5. Summarize the results of the runoff treatment design and describe how the proposed design meets the requirements of CCC ~~Chapter~~ 40.386 and this manual.

Treatment System Plan

1. Provide an illustrative sketch of the treatment facilities and appurtenances.

2. The sketch shall correspond with the final engineering plans. Alternatively, a final site grading plan that incorporates the above information may be included as an attachment to the Final Stormwater Plan.

3. Provide electronic copies of the drawings used for analysis, measurement, and design inputs for the hydrologic analysis submitted with the final drawing in Portable Document Format (PDF) format.

Minimum Requirement #7 – Flow Control

For land-disturbing activities where the thresholds within Minimum Requirement #7 indicate that flow control facilities are required:

1. Identify revisions to the conceptual design proposed in the Preliminary Stormwater Plan.

2. Identify initial conditions, including stream base flows, beginning water surface elevations, hydraulic or energy grade lines, initial groundwater elevations, beginning storage volumes, and other data or assumptions used to complete the analyses of initial conditions. Reference the sources of information.

3. Describe any assumptions used to complete the analysis, including flow credits through the use of on-site stormwater BMPs or LID measures.

4. Complete a detailed hydrologic analysis for existing and developed site conditions, in accordance with the requirements of Book 2, Chapter 1, using an approved continuous flow model. Compute pre-developed and developed flow durations for all sub-basins. Provide an output table from the model, including the following:

    a. Flow rates for the 2-, 10-, and 100-year return periods for pre-developed and developed conditions.

Minimum Requirement #8 – Wetlands Protection

For projects that discharge stormwater to a wetland, either directly or indirectly through a conveyance system, the TIR shall describe wetland protection measures to be implemented in accordance with Minimum Requirement #8. The narrative shall describe the analysis performed (See Section 1.5.8) to define the measures that will maintain the hydrologic conditions and hydrophytic vegetation.

Minimum Requirement #9 – Operation and Maintenance

Provide information on who will own, operate, and maintain the permanent stormwater facilities.

Submit an operation and maintenance manual that includes O&M procedures for each stormwater control or treatment facility that will be privately maintained.

The manual shall be written in an orderly and concise format that clearly describes the design and operation of the facility. The manual shall also provide an outline of required maintenance tasks, with recommended frequencies at which each task should be performed. The manual shall contain or reference procedures from Book 4, *Stormwater Facility Operations and Maintenance*.

See Section 1.9 for details on legal documents such as covenants and plat information.

Section C – Conveyance Systems Analysis and Design

1. Reference the conceptual drainage design proposed in the Preliminary Stormwater Plan.

2. Identify revisions to the conceptual drainage design contained in the Preliminary Stormwater Plan.

3. Include and reference in the technical appendix all computations, equations, charts, nomographs, detail drawings, and other tabular or graphic aids used to design conveyance system elements.

4. Identify and discuss initial conditions, including water surface elevations, hydraulic or energy grade lines, beginning storage elevations, and other data or assumptions used to complete the analyses of initial conditions. Reference the sources of information.

5. Describe any assumptions used to complete the analyses.

6. Complete a detailed hydraulic analysis of all proposed collection and conveyance system elements, including flow splitters, outfall structures, and outlet protection in accordance with Book 2, Chapter 7, Conveyance Design. ~~Compute and tabulate the following:~~

7. Compute and tabulate the following:

a. ~~7.~~ Identify design flows and velocities and conveyance element capacities for all conveyance elements within the development.

b. ~~8.~~ Identify the 10-year recurrence interval stage for detention facility outfalls (See Book 2, Chapter 7). Provide stage-frequency documentation from an approved continuous flow model.

c. ~~9.~~ Compute existing 100-year floodplain elevations and lateral limits for all channels, and verify no net loss of conveyance or storage capacity from development.

8. ~~10.~~ Reference conveyance system elements to labeled points shown on the site location map or development plan.

d. ~~11.~~ Verify the capacity of each conveyance system element to convey design flow and discharge at non-erosive velocities. Verify the capacity of the on-site conveyance system to convey design flows that result from ultimate build-out of upstream areas.

9. ~~12.~~ Include and reference all hydraulic computations, equations, pipe flow tables, flow profile computations, charts, nomographs, detail drawings, and other tabular or graphic aids used to design and confirm the performance of conveyance systems.

10. ~~13.~~ Summarize the results of system analyses, and describe how the proposed design meets the requirements of this manual.

Section D Additional Requirements

Section D.1 – Off-site Analysis

If applicable, provide the results of an off-site analysis prepared in accordance with Chapter 5.

Off-site analysis is required when a project that must meet Minimum Requirements #1 – #9 meets any of the following criteria:

- Adds 35,000 square feet or more of new pervious surface.
- Constructs or modifies a drainage pipe or ditch that is 12 inches or more in size/depth or that receives runoff from a drainage pipe or ditch that is 12 inches or more in size/depth.
- Contains or lies adjacent to a landslide, steep slope, or erosion hazard area.
- Is not exempt from Minimum Requirement #8.
- The project changes the rate, volume, duration, or location of discharges to and from the project site.

Section D.2 - Closed Depression Analysis

If applicable, provide the results of a closed depression analysis prepared in accordance with Book 2, Chapter 1.

Section D.3 – Other Permits

Construction of roads and stormwater facilities may require additional permits from other agencies. These permits may contain requirements that affect the design of the stormwater system. This section lists the titles of other possible required permits, the agencies that require the permits, and the permit requirements, if known, that may affect the Final Stormwater Plan. Approved permits that are critical to the feasibility of the stormwater facility design shall be included in this section.

1. Onsite sewage disposal: Clark County Public Health or Washington Department of Health
2. Developer/local agency agreement: Washington State Department of Transportation (WSDOT) (connection license)
3. Temporary exceedance of State Surface Water Quality Standards – Turbidity Mixing Zone: Washington Department of Ecology (WAC 173-201A)
4. An Ecology general construction stormwater permit for projects that disturb over an acre
5. An Ecology general stormwater permit for industrial activities
6. Hydraulic project approval: Washington Department of Fish and Wildlife (WDFW)
7. Dam safety permit: Ecology
8. Section 10, 404, and 103 permits: U.S. Army Corps of Engineers
9. Surface mining reclamation permits: Washington Department of Natural Resources
10. Clark County critical aquifer recharge area (CARA) permit: CCC ~~Chapter~~ 40.410
11. Clark County floodplain permit: CCC ~~Chapter~~ 40.420
12. Clark County geohazard permit: CCC ~~Chapter~~ 40.430
13. Clark County habitat permit: CCC ~~Chapter~~ 40.440
14. Clark County wetland permit: CCC ~~Chapter~~ 40.450
15. Clark County shoreline management permit: CCC ~~Chapter~~ 40.460
16. Underground injection control (UIC) well registration: Ecology (Clark County requires registration through the Washington State Department of Ecology for all UICs)

Section D.~~3~~ 4—Approval Conditions Summary

List each preliminary approval condition related to stormwater control, wetlands, floodplains, and other water-related issues, and describe how the final design addresses or conforms to each condition.

Section D.~~4~~ 5 – Special Reports and Studies

Where site-specific characteristics, such as steep slopes, wetlands, and sites located in floodplains or wellhead protection areas, present difficult drainage and water quality design problems, the Responsible Official may require additional information or the preparation of special reports and studies that further address the specific site characteristics, describe the potential for impacts associated with the development, and demonstrate the proposed measures to mitigate impacts. Special reports shall be prepared by professionals with expertise in the particular area of analysis, who shall date, sign, stamp, and otherwise certify the report. Subjects of special reports may include, but are not be limited to:

1. Geotechnical
2. Wetlands
3. Floodplains and floodways
4. Groundwater
5. Structural design
6. Fluvial geomorphology (erosion and deposition).

All special reports and studies shall be included in the technical appendix.

Appendices

Map Submittals

See the preliminary TIR requirements.

Technical Data

All TIRs shall contain a technical appendix that includes all computations completed in the preparation of the TIR, together with copies of referenced data, charts, graphs, nomographs, hydrographs, stage-storage discharge tables, maps, exhibits, and all other information required to clearly describe the stormwater flow control and runoff treatment design for the proposed development activity. The format of the technical appendix shall follow as closely as possible the section format of the TIR and shall be adequately cross-referenced to ensure that the design may be

Chapter 2 On-Site Stormwater Management

Chapter Contents

2.1 Introduction 79
2.1.1 Purpose 79
2.1.2 How to Use this Chapter 79
2.1.3 Minimum Requirements 79
2.2 BMP Selection Process 80
2.3 Soils Assessment 84
2.3.~~1.~~1 Qualified Professionals 85
2.3.~~1.~~2 Soil Description 85
2.3.~~1.~~3 Soil Stratigraphy 86
2.3.~~1.~~4 Infiltration Rate (Coefficient of Permeability) 86
2.3.~~1.~~5 Groundwater Assessment 89
2.4 LID Infeasibility due to Competing Needs 90
2.5 Onsite Stormwater Management BMPs 91
2.5.1 Roof Downspout Control BMPs 91
2.5.1.1 Purpose and Description 91
2.5.1.2 Roof Downspout Selection Process 91
2.5.1.3 Roof Downspout BMP Applications, Limitations and Infeasibility Criteria 93
2.5.1.4 Roof Downspout Setbacks 95
2.5.2 Soil Amendment BMPs 96
2.5.2.1 Purpose and Description 96
2.5.3 Dispersion BMPs 96
2.5.3.1 Purpose and Description 96
2.5.3.2 Applications and Limitations 97
2.5.3.3 Infeasibility Criteria for Dispersion BMPs 100
2.5.3.4 Setbacks for Dispersion BMPs 100
2.5.4 Bioretention and Rain Garden BMPs 101
2.5.4.1 Purpose and Description 101
2.5.4.2 Applications and Limitations 102

ERRATA September 2016

2.2 BMP Selection Process

The following process is required for selecting and planning for LID BMPs and demonstrating compliance with Minimum Requirement #5:

1. Use site design principles to retain native vegetation and minimize impervious surfaces to the extent feasible, including using site design BMPs and vegetation retention BMPs, per Minimum Requirement #1.

2. Determine applicable BMPs per Section 2.2.

3. Perform the Soils Assessment per Section 2.3.

4. Evaluate the feasibility of required BMPs using information in Sections 2.4 and 2.5.

5. Refer to BMP Information Sheets in Book 2, Chapter 2 to design selected BMPs.

Projects subject to Minimum Requirement #5 must consider LID BMPs from one of three tables based on the thresholds and criteria in Minimum Requirement #5. Each table lists the required LID BMPs and the order of use to meet Minimum Requirement #5.

Use Figure 2.1 to determine which LID table the project site designer is required to use. If the flowchart in Figure 2.1 requires:

- The use of BMPs from List #1, then use Table 2.1 to find out which LID BMPs the site designer must consider. Follow instructions in the table.
- The use of BMPs from List #2, then use Table 2.2 to find out which LID BMPs the site designer must consider. Follow instructions in the table.
- If the project drains to a flow exempt water body, then use Table 2.3 to find out which LID BMPs the site designer must consider.
- Meet~~ing~~ the LID Performance Standard, then select any combination of LID and traditional flow control and treatment BMPs that achieve the performance objective in accordance with Minimum Requirement #5 and apply BMP T5.13 Post-Construction Soil Quality and Depth.

Clark County accepts and encourages the use of other on-site stormwater management BMPs that are not listed in the selection process for required BMPs. These BMPs are described in Sections 2.5.6 and 2.5.7, and include Better Site Design (BMP T5.41), Tree Retention and Tree Planting (BMP T5.16), and others.

Table 2.3: Required Table of LID BMPs for Projects ~~Subject to Minimum Requirements #1 – #9~~ that discharge to a flow control exempt water body per Minimum Requirement #7

Implement the following BMPs where feasible.				
For each surface, consider BMPs in the sequence indicated for that type of surface. If a sequence number appears on more than one BMP for a surface, then the BMPs labeled with that sequence number may be considered in any order before moving on to the next number in the sequence. Use the first BMP that is considered feasible. No other On-site Stormwater Management BMP is necessary for that surface.				
BMP #	**BMP Name**	**Lawn and Landscape Areas**	**Roofs**	**Other Hard Surfaces**
T5.13	Post-Construction Soil Quality and Depth	1		
T5.10A/T5.10B	Downspout Full Infiltration		1	
T5.10C	Downspout Dispersion		2	
T5.10D	Perforated Stub-out Connections		3	
T5.12	Sheet Flow Dispersion			1
T5.11	Concentrated Flow Dispersion			1

2.3 Soils Assessment

Low impact development requires soil and possibly groundwater analysis to determine infiltration rates and soil storage capacity. These analyses are needed for three primary reasons:

1. LID emphasizes storage and infiltration of stormwater in smaller-scale facilities distributed throughout the site.

2. On sites with mixed soil types, areas with permeable soils should be preserved and utilized for infiltration, and impervious areas should be located over less permeable soils.

3. Determining feasibility of LID BMPs.

Soil and subsurface characterization relies to a large extent on infiltration testing and soil testing. The type and number of these tests for site assessments is variable and specific to the site and site design; however some general guidelines are appropriate. Test locations should consider site features such as topography, mapped soil type, hydrologic characteristics and other site features.

A soil and infiltration capacity assessment is necessary to complete the preliminary Stormwater Site Plan once the layout and location of LID stormwater BMPs has been determined. If traditional infiltration BMPs will be used on the site, see requirements in Chapter 4 in addition to this chapter.

The site designer must provide sufficient information to confirm the feasibility of the proposed BMPs to meet Minimum Requirement #5. Information should also be gathered to provide a basis for estimating the facilities' contribution to meeting Minimum Requirements #6 and #7, where applicable.

Document the results of the Soils Assessment in the Soils Report described in Section 1.8.3. For projects qualifying to use the Stormwater Site Plan Short Form, follow the instructions in the in Appendix 1-I to document the results.

2.3.~~1~~.1 Qualified Professionals

Soil and subsurface characterization shall be conducted by a certified soil scientist, professional engineer, geologist, hydrogeologist or engineering geologist registered in the State of Washington or suitably trained persons working under the supervision of the above professionals. For projects meeting Minimum Requirements #1 – #5, a licensed on-site sewage designer can be used to complete the soil description (Section 2.3.1.2) and to conduct infiltration tests (Section 2.3.1.4) where necessary.

2.3.~~1~~.2 Soil Description

Perform the following to describe the underlying soils on the site:

- Soil test pits
- Soil borings
- Soil grain size analysis

Provide boring logs and other detailed information to characterize the soil profile. Provide a review of existing geotechnical and geological information from published geology maps, Natural Resource Conservation Service soil surveys, and past geotechnical information. Identify the appropriate hydrologic soil group, and provide a summary of seasonal groundwater elevation information and topsoil depth.

Where downspout infiltration systems are proposed, the soils description must demonstrate that soils suitable for infiltration are present on the site. Prepare at least one soils log at the location of each downspout infiltration system, a minimum of 4 feet in depth from the proposed grade and at least 1 foot below the expected bottom elevation of the infiltration trench or drywell. Identify the NRCS series of the soil, the hydrologic soil group per Appendix 2-A, and the USDA textural class of the soil horizon through the depth of the log. Note any evidence of high groundwater level, such as mottling.

Applicants proposing to meet Minimum Requirement #5 solely with one of the following listed BMPs are not required to complete the remaining aspects of the Soils Assessment described in Sections 2.3.1.3 through 2.3.1.5:

BMP T5.30A/B, Full Dispersion.

BMP T5.10A/B, Roof Downspout Full Infiltration.

BMP T5.10C, Downspout Dispersion.

BMP T5.10D, Perforated Stub-out Connection.

2.3.~~1.~~3 Soil Stratigraphy

For projects subject to Minimum Requirements #1 – #9, the soils report should include a description of the soil stratigraphy and groundwater elevations at the site.

Soil stratigraphy must be assessed for low permeability layers, highly permeable sand/gravel layers, depth to groundwater, and other soil structure variability necessary to assess subsurface flow patterns. Soil characterization for each soil unit (soil strata with the same texture, color, density, compaction, consolidation and permeability) should include:

- Grain size distribution
- Textural class
- Percent clay content
- Cation exchange capacity
- Color/mottling
- Variations and nature of stratification

2.3.~~1.~~4 Infiltration Rate (Coefficient of Permeability)

Determine the measured infiltration rate for subgrade soil profile (existing soils) beneath areas proposed to have bioretention, rain gardens and permeable pavement. Conduct infiltration tests using one of the methods in Section 4.3.1.3. Conduct tests in locations and at adequate frequency capable of producing a soil profile characterization that fully represents the infiltration capability where the LID infiltration BMPs are proposed.

Prepare detailed logs for each test pit or test hole and a map showing the location of the test pits or test holes. Logs must include, at a minimum: depth of pit or hole, soil descriptions, depth to water, and presence of stratification. Logs must substantiate whether stratification does or does not exist. The qualified professional may consider additional methods of analysis to substantiate the presence of stratification that may influence the design or successful operation of the facility.

Projects Subject Only to Minimum Requirements #1 – #5 and Not Meeting LID Performance Standard

Perform an infiltration test at each rain garden location to determine if the minimum measured coefficient of permeability of 0.3 in/hr is exceeded.

For proposed permeable pavement locations, perform an infiltration test for every 5,000 sq. ft. of permeable pavement.

The depth and number of infiltration tests and soil samples should be increased if, in the judgment of the qualified professional, conditions are highly variable and such increases are necessary to accurately estimate the performance of the infiltration system. The professional can also consider a reduction in the extent of infiltration testing if, in their judgment, information exists confirming that the site is unconsolidated sediment with high infiltration rates, and there is one foot of separation from the bottom of the base course for permeable pavement to groundwater and site soils are found to be homogeneous and consistent.

In high water table sites, the subsurface exploration sampling need not be conducted lower than two feet below the groundwater table. For all proposed locations of LID infiltration BMPs, determine whether the location has at least one foot minimum clearance to the seasonal high groundwater or other hydraulic restriction layer.

Projects Subject to Minimum Requirements #1 – #9 or Meeting LID Performance Standard

<u>Bioretention</u>

For proposed bioretention locations, infiltration tests shall be conducted as follows:

- On a single, smaller commercial property where one bioretention facility is proposed, one test must be performed at the proposed bioretention location. Tests at more than one site could reveal the advantages of one location over another.
- On larger commercial sites, a test per Section 4.3.1.3 must be performed every 5,000 square feet of PGIS.
- On residential developments where the proposed bioretention facility will receive runoff from one or two lots and less than ¼ acre of impervious surface, conduct one infiltration test at the proposed bioretention location.
- For bioretention facilities proposed to receive runoff from more than two lots or greater than ¼ acre of impervious surface, an infiltration test is required at each potential bioretention site.
- Long, narrow bioretention facilities or bioretention swales, such as one following the road right-of-way, should have a test location at least every 200 lineal feet, and within each length of road with significant differences in subsurface characteristics.
- The qualified professional can exercise discretion concerning the need for and extent of infiltration rate testing:

- The depth and number of infiltration tests should be increased if, in the judgment of the qualified professional, conditions are highly variable and such increases are necessary to accurately estimate the performance of the infiltration system.
- The depth and number of infiltration tests can be decreased, if in the judgement of the qualified professional, information exists confirming that the site is unconsolidated coarse gravel with high infiltration rates, and there is one foot or three foot minimum separation to groundwater from the bottom of a bioretention installation depending upon drainage area size (per BMP T5.14B Infeasibility Criteria; See Section 2.5.4.3).

After conducting an infiltration test, test sites should be over-excavated three feet below the projected infiltration facility's bottom elevation to determine if there are restrictive layers or groundwater. Observations through a winter season can also be used to assist in identifying a seasonal groundwater restriction.

Correction Factors

Correction factors are applicable to projects subject to Minimum Requirements #1 – #9 and to projects that must or choose to demonstrate compliance with the LID Performance Standard of Minimum Requirement #5. Note that this is separate design issue from the assignment of a correction factor to the overlying, designed bioretention soil mix. See the bioretention design section in Book 2, Chapter 2 for information on those correction factors. Correction factors are shown in Table 2.4.

Table 2.4: Correction Factors to Infiltration Rate for Bioretention

This table gives correction factors for coefficient of permeability values to estimate the design (long-term) infiltration rates of subgrade soils underlying Bioretention.	
Site Analysis Issue	**Correction Factor**
Site variability and number of locations tested	CF_V =0.50
Degree of influent control to prevent siltation and bio-buildup	No correction factor required

Permeable Pavement

For sites proposing permeable pavement, infiltration tests shall be conducted as follows:

- On commercial property, conduct an infiltration test for every 5,000 sq. ft. of permeable pavement, but not less than one test per section of contiguous permeable pavement.
- On residential developments, conduct infiltration tests at every proposed lot, at least every 200 feet of roadway and within each length of road with significant differences in subsurface characteristics.
- The qualified professional may exercise discretion concerning the need for and extent of

infiltration rate testing. The professional may consider a reduction in the extent of infiltration testing if, in their judgment, information exists confirming that the site is unconsolidated sediment material with high infiltration rates, that the soils are homogeneous and consistent, and that there is one foot of separation from the bottom of the base course for permeable pavement to groundwater.

Unless seasonal high groundwater elevations across the site have already been determined, upon conclusion of the infiltration testing, infiltration sites should be over-excavated three feet to see any restrictive layers or groundwater. Observations through a winter season can identify a seasonal groundwater restriction.

Perform infiltration testing in the soil profile at the estimated bottom elevation of base materials for the permeable pavement. If no base materials, (e.g., a permeable concrete sidewalk), perform the testing at the estimated bottom elevation of the pavement.

Correction Factors

Correction factors are applicable to projects subject to Minimum Requirements #1 – #9 and to projects that must or choose to demonstrate compliance with the LID Performance Standard of Minimum Requirement #5.

Tests should be located and be at adequate frequency capable of producing a soil profile characterization that fully represents the infiltration capability where the permeable pavement is located. A correction factor of one (1) for the quality of pavement aggregate base material may be used if the aggregate base is clean washed material with 1% or less fines passing the 200 sieve. Otherwise use a factor of 0.9, as shown in Table 2.5.

Table 2.5: Correction Factors to Infiltration Rate for Permeable Pavement

This table gives correction factors for coefficient of permeability values to estimate design (long-term) infiltration rates of the subgrade for Permeable Pavement.	
Site Analysis Issue	**Correction Factor**
Site variability and number of locations tested	CF_v = 0.50
Quality of pavement aggregate base material	CF_m = 0.9 to 1

Total correction factor (CF_T) = CF_v x CF_m

2.3.~~1~~.5 Groundwater Assessment

For facilities serving over one acre, groundwater monitoring wells or test pits must be installed and monitored in each bioretention facility through at least one winter season (December 21 through March 21) unless:

- From an underground storage tank and its connecting pipes that is used to store petroleum products, chemicals, or liquid hazardous waste in which 10% or more of the storage volume of the tank and connecting pipes is beneath the ground:
    - 10 feet when the system capacity is 1100 gallons or less.
    - 100 feet when the system capacity is greater than 1100 gallons.
- 100 feet from an area with known deep soil contamination.
- For a bioretention system or raingarden that would serve a drainage area that is less than 5,000 sq. ft. of pollution-generating impervious surface and less than 10,000 sq. ft. of impervious surface, 10 feet from any structure or property lines.
- For a bioretention system that would serve a drainage area that is 5,000 sq. feet or more of pollution-generating impervious surface or 10,000 sq. ft. or more of impervious surface or ¾ acres or more of pervious surfaces, 20 feet from the downslope side of any foundation, structure, or property line and 100 feet from the upslope side of any foundation. These setbacks may be increased or decreased based on engineering analysis that shows the performance of a building's foundation system will not be adversely affected by the presence of the bioretention facility.

2.5.5 Permeable Pavement BMP T5.15

2.5.5.1 Purpose and Description

Permeable paving surfaces are an important integrated management practice within the LID approach and can be designed to accommodate pedestrian, bicycle and auto traffic while allowing infiltration, treatment and storage of stormwater. The general categories of permeable paving systems include:

- **Porous hot or warm-mix asphalt pavement** is a flexible pavement similar to standard asphalt that uses a bituminous binder to adhere aggregate together. However, the fine material (sand and finer) is reduced or eliminated and, as a result, voids form between the aggregate in the pavement surface and allow water to infiltrate.
- **Permeable Portland cement concrete** is a rigid pavement similar to conventional concrete that uses a cementitious material to bind aggregate together. However, the fine aggregate (sand) component is reduced or eliminated in the gradation and, as a result, voids form between the aggregate in the pavement surface and allow water to infiltrate.
- **Permeable interlocking concrete pavements (PICP) and aggregate pavers.** PICPs are solid, precast, manufactured modular units. The solid pavers are (impervious) high-strength Portland cement concrete manufactured with specialized production equipment. Pavements constructed with these units create joints that are filled with permeable aggregates and installed on an open-graded aggregate bedding course. Aggregate pavers (sometime called pervious pavers) are a different class of pavers from PICP. These include modular precast paving units made with similar sized aggregates bound together with Portland cement concrete with high-

3.2.3.6 Basic Treatment Menu

Performance Goal

The Basic Treatment Menu facility choices are intended to achieve 80% removal of total suspended solids for influent concentrations that are greater than 100 mg/l, but less than 200 mg/l. For influent concentrations greater than 200 mg/l, a higher treatment goal may be appropriate. For influent concentrations less than 100 mg/l, the facilities are intended to achieve an effluent goal of 20 mg/l total suspended solids.

The performance goal applies to the water quality design storm volume or flow rate, whichever is applicable. The performance goal assumes that the facility is treating stormwater with a typical particle size distribution (see stormwater monitoring protocol on the Department of Ecology website).

Options

Any one of the following options may be chosen to satisfy the basic treatment requirement:

- Infiltration Treatment
- Sand Filters (BMP T8.10; BMP T8.11; BMP T8.20; BMP T 8.30)
- Basic and Wet Biofiltration Swales (BMP T9.10 and BMPT9.20)
- Basic Filter Strip (BMP T9.40)
- Compost-amended Vegetated Filter Strip (CAVFS) (BMP T7.40)
- Basic Wetpond (BMP T10.10)
- Wetvault (BMP T10.20)

  A wetvault may be used for commercial, industrial, or road projects if there are space limitations. Clark County discourages the use of wetvaults for residential projects. Combined detention/wetvaults are allowed.
- Stormwater Treatment Wetland (BMP T10.30)
- Combined Detention and Wetpool Facilities (BMP ~~T10.40)~~ D6.40
- Bioretention (BMP T5.14B)

  Where bioretention is intended to fully meet treatment requirements for its drainage area, it must be designed, using an approved continuous flow model, to pass at least 91% of the influent runoff file through the imported soil mix.
- Media Filter Drain (MFD) (BMP T8.40)
- Proprietary BMPs:
  - Filterra® System

deal with this situation. As long as the first cell retains a permanent pool of water during the wet season, this situation will not reduce the pond's effectiveness but may be an aesthetic drawback.

Wetponds work best when the water already in the pond is moved out en masse by incoming flows, a phenomenon called "plug flow." Because treatment works on this displacement principle, the wetpool storage of wetponds may be provided below the groundwater level without interfering unduly with treatment effectiveness. However, if combined with a detention function, the live storage must be above the seasonal high groundwater level.

Wetponds may be single-purpose facilities, providing only runoff treatment, or they may be combined with a detention pond to also provide flow control. If combined, the wetpond can often be stacked under the detention pond with little further loss of development area. See BMP ~~T10.40~~ D6.40 for a description of combined detention and wetpool facilities.

A wetvault may be used for commercial, industrial, or roadway projects if there are space limitations precluding the use of other treatment BMPs. The use of wetvaults for residential development is highly discouraged. Combined detention and wetvaults are allowed; see BMP ~~T10.40~~ D6.40.

The stormwater wetland design occupies about the same surface area as wetponds, but has the potential for better aesthetic integration because of the abundance of emergent aquatic vegetation. The most critical factor for a successful design is the provision of an adequate supply of water for most of the year. Careful planning is needed to ensure sufficient water will be retained to sustain good wetland plant growth. Since water depths are shallower than in wetponds, water loss by evaporation is an important concern. Stormwater wetlands are a good stormwater treatment facility choice in areas with high winter groundwater levels

Note that BMP ~~T10.40~~ D6.40 includes a treatment wetland with detention.

The basis for pollutant removal in combined facilities is the same as in the stand-alone water quality facilities. However, in the combined facility, the detention function creates fluctuating water levels and adds turbulence. For simplicity, the positive effect of the extra live storage volume and the negative effect of increased turbulence are assumed to balance, and are thus ignored when sizing the wetpool volume. For the combined detention/stormwater wetland, criteria that limit the extent of water level fluctuation are specified to better ensure survival of the wetland plants.

Unlike the wetpool volume, the live storage component of the facility should be provided above the seasonal high water table.

3.4.5.3 Best Management Practices (BMPs) for Wetpool Facilities

The four BMPs listed are currently recognized as effective treatment techniques using wetpool facilities. Select the appropriate BMPs using the Step-by-Step process and the Treatment Facility Menus in Section 3.2.3.

- BMP T10.10: Wetpond – Basic and Large

- BMP T10.20: Wetvault
- BMP T10.30: Stormwater Treatment Wetland
- BMP ~~T10.40~~ D6.40: Combined Detention and Wetpool

3.4.6 Proprietary BMPs

As of the printing of this manual, the following proprietary BMPs are accepted by Clark County for applicable treatment uses:

- StormFilter® using ZPG Media is accepted for Basic Treatment.
- Filterra® System and Filterra® Boxless™ are accepted for Oil Treatment, Basic Treatment, Enhanced Treatment, and Phosphorous Treatment.
- Perk Filter® is accepted for Basic Treatment and Phosphorous Treatment.

Consult a BMPs manufacturer for design, specifications, and installation criteria.

Proprietary BMPs that have not been accepted by Clark County or that may emerge after the printing of this manual are known as Emerging Technologies. Section 3.4.7, below, discusses the use of Emerging Technologies in Clark County.

3.4.7 Emerging Technologies

3.4.7.1 Background

Traditional best management practices (BMPs) such as wetponds and filtration swales may not be appropriate in some situations due to size and space restraints or inability to remove target pollutants. Therefore the stormwater treatment industry emerged to develop new stormwater treatment devices.

Emerging technologies are stormwater treatment devices that are new to the stormwater treatment marketplace. These devices include both permanent and construction site treatment technologies. Many of these devices have not undergone complete performance testing so their performance claims cannot be verified. Emerging technologies often lack a documented maintenance history that supports understanding long-term operational costs.

Washington State Department of Ecology developed the Technology Assessment Protocol – Ecology (TAPE) and Chemical Technology Assessment Protocol Ecology (CTAPE) protocols to help local governments in selecting new stormwater treatment technologies. Ecology posts information on emerging technologies at the emerging technologies website: http://www.ecy.wa.gov/programs/wq/stormwater/newtech/index.html

- Grain size distribution (ASTM D422 or equivalent AASHTO specification), if using the soil grain size analysis method to estimate infiltration rates;
- Visual grain size classification;
- Percent clay content (include type of clay, if known);
- Color/mottling;
- Variations and nature of stratification.

7. Locate the groundwater table and establish its gradient, direction of flow, and seasonal variations, considering the water table aquifer (defined as the uppermost aquifer in open conditions). Groundwater monitoring wells shall be installed to monitor variations in groundwater level through at least one wet season (October 1 through April 30).

8. For facilities serving a drainage area of one acre or over, one groundwater monitoring well shall be installed in each proposed infiltration facility location, unless:
   - GIS groundwater data from Clark County ~~or~~ and available field information describing water table elevations within 500 feet of the site indicates that the seasonal high groundwater elevation is at least 15 feet below the base of the proposed facility. Examples of field information that can be used include public well records and groundwater monitoring reports from other development sites.; OR
   - The seasonal high groundwater elevation has been found to be at least 15 feet below the facility base from monitoring wells installed at the site where monitoring was conducted during at least one wet season in the preceding three years.

9. For facilities serving a drainage area less than one acre, establish that the depth to groundwater or other hydraulic restriction layer will be at least 10 feet below the base of the facility. This can be determined through the use groundwater monitoring wells as described above, through subsurface explorations or through information from nearby wells (500 feet or closer).

Step 3: Soil Testing

1. Field measured infiltration test to determine the coefficient of permeability must be conducted using one of the methods listed in Section 4.3.1.3.

2. If the infiltration facility will provide treatment the soil characterization must also include:
   - Cation exchange capacity (CEC) and organic matter content for each soil type and strata where distinct changes in soil properties occur, to a depth below the base of the facility of at least 2.5 times the maximum design water depth, but not less than 6 feet.

Soils information can be obtained from a Natural Resource Conservation Service (NRCS) manual or the NRCS' Web Soil Survey website at http://websoilsurvey.nrcs.usda.gov/app/HomePage.htm.

Washington state soil survey information is available at:
http://www.nrcs.usda.gov/wps/portal/nrcs/surveylist/soils/survey/state/?stateId=WA

Additionally, site-specific soil data can be obtained through site soil analysis as a part of preparation of a Technical Information Report and a Soils Report (see Section 1.8.1.5 and Section 1.8.3).

Ground Cover and Native Vegetation

Label existing vegetation on the drawing. Show features such as tree clusters, grassy areas, and unique or sensitive vegetation. Unique vegetation may include existing trees above a given diameter. Indicate existing denuded or exposed soil areas. Show other special features such as individual trees and areas of native vegetation required to be protected during construction. Projects may protect areas of native vegetation to meet LID requirements.

Critical Areas

Delineate critical areas adjacent to or within the site on the drawing. Show features such as steep slopes, erosion hazard areas, riparian habitat buffers, streams, floodplains, lakes, wetlands and wetland buffers, and geologic hazard areas. Delineate setbacks and buffer limits for these features on the drawings. On the drawings, show other related jurisdictional boundaries such as Shorelines Management and the Federal Emergency Management Agency (FEMA) base floodplain.

Adjacent Areas

Identify existing buildings, roads, and facilities adjacent to or within the project site on the drawings. Identify existing and proposed utility locations, construction clearing limits and erosion and sediment control BMPs on the drawings.

Existing Encumbrances

Identify wells, existing and abandoned septic drainfield, utilities, easements, setbacks, and site constraints.

Precipitation Records

Determine the average monthly rainfall and rainfall intensity for the required design storm events. These records may be available from the local permitting agency. ~~Volume III~~ Book 2 Appendix 2-A also has resources for determining rainfall values.

- Assure that washout of concrete trucks is performed off-site or in designated concrete washout areas only. Do not wash out concrete trucks onto the ground, or into storm drains, open ditches, streets, or streams. Do not dump excess concrete on site, except in designated concrete washout areas. Concrete spillage or concrete discharge to surface waters of the State is prohibited.
- Obtain written approval from the Department of Ecology before using chemical treatment other than CO_2 or dry ice to adjust pH.

Suggested BMPs

- BMP C151: Concrete Handling
- BMP C152: Sawcutting and Surfacing Pollution Prevention
- BMP C153: Material Delivery, Storage and Containment
- BMP C154: Concrete Washout Area
- BMP C250: Construction Stormwater Chemical Treatment
- BMP C251: Construction Stormwater Filtration
- BMP C252: High pH Neutralization Using CO_2
- BMP C253: pH Control for High pH Water
- See Book ~~4~~ 3– Source Control

6.4.10 Element #10: Control De-Watering

- Discharge foundation, vault, and trench dewatering water, which have characteristics similar to stormwater runoff at the site, into a controlled conveyance system before discharge to a sediment trap or sediment pond.
- Discharge clean, non-turbid de-watering water, such as well-point groundwater, to systems tributary to, or directly into surface waters of the state, as specified in Element #8, provided the de-watering flow does not cause erosion or flooding of receiving waters or interfere with the operation of the system. Do not route clean dewatering water through stormwater sediment ponds. Note that "surface waters of the State" may exist on a construction site as well as off site; for example, a creek running through a site.
- Handle highly turbid or contaminated dewatering water separately from stormwater.
- Other treatment or disposal options may include:
    - Infiltration.
    - Transport off-site in a vehicle, such as a vacuum flush truck, for legal disposal in a manner that does not pollute state waters.
    - Ecology-approved on-site chemical treatment or other suitable treatment technologies.

Equation 2

~~$k = (\pi * d)/(11 * t) * \ln(h_1/h_2)$~~ $k=[(\pi*d)/(11*t)]*\ln\bullet(h1/h2)$

where:
k = coefficient of permeability (in/hr)
d = diameter of borehole (in)
t = time (hr)
h_1 = initial head (in)
h_2 = final head (in)

Test Limitations

It should be noted that the coefficient of permeability calculations identified above are based on ideal homogenous isotropic media. Because Clark County soils are often fluvially deposited, stratified, and interbedded, they are frequently neither homogenous nor isotropic. This may result in permeability coefficients that vary with depth and direction. Groundwater mounding or an elevated seasonal groundwater table may also affect the infiltration rate. In rare cases, the soil's ability to infiltrate water may be determined by its horizontal rather than vertical coefficient of permeability. The design professional should verify whether these are reasonable assumptions to allow for an approximate estimate of the soil coefficient of permeability. If not, specialized testing or analysis may be required.

Infiltration systems can be expected to undergo long-term degradation of infiltration capacity as a result of siltation, debris collection, and soil crusting; therefore, a correction factor must be calculated into the coefficient of permeability for the design of infiltration systems. Correction factors as described in Section 4.5.4 must be applied to the calculated coefficient of permeability to determine the allowable design infiltration rate.

The test limitations described above for the suggested standard methods also apply to the auger borehole method. In addition, the borehole method assumes flush soil at the bottom of the auger and groundwater levels sufficiently below the depth of the test. Soil swelling, segregation, and consolidation are assumed to be negligible. Hydraulic loss in the auger is also assumed to be negligible.

LID Feasibility Checklist

Project Title and Case Number: _____

Applicant: _____

Date: _____ **TDA #:** _____

Instructions *: Fill out a LID Feasibility Checklist for each TDA on the project. Submit the completed checklist with the Preliminary TIR (see Book 1, Section 1.8.1.5).*

Step 1: Indicate which mandatory list of LID BMPs is applicable to the project in accordance with Minimum Requirement #5 and the flow chart in Figure 2.1 in Book 1. Check the corresponding box in Section 1 below. For projects meeting the LID Performance Standard, this checklist does not apply.

Step 2: Indicate which type(s) of surfaces will be present within the TDA in Section 2.

Step 3: Consider feasibility criteria and setbacks in Section 3.

Section 1: Required LID BMPs

☐ List #1 (Table 32.1) ☐ List #2 (Table 32.2) ☐ BMPs in Table 32.3

Section 2: Surfaces

☐ Roofs ☐ Hard surfaces other than roofs

Section 3: Feasibility Criteria

For each type of surface selected in Section 2, consider BMPs in the order indicated in the required list or table selected in Section 1.

For each question, place a mark in either the Yes or No column. For each No answer, move on to the subsequent question within the BMP. If a Yes answer is given, then the BMP is not feasible in the TDA and is not required in accordance with Minimum Requirement #5. If No answers are given to all questions, then the BMP is feasible in the TDA and must be implemented in accordance with Minimum Requirement #5. When feasibility of the BMP has been determined, then select the appropriate box in the Determination section.

For each type of surface, stop at the first BMP that is feasible.

Answers to questions must consider site-specific information, and some may require professional written evaluation as justification. Please see Book 1, Chapter 2 for more information.

FULL DISPERSION BMP T5.30A	Roof		Surfaces	
Feasibility Criteria and Setbacks	**YES**	**NO**	**YES**	**NO**
Will the project protect and maintain less than 65% of the TDA in a forested native condition?				
Does a professional geotechnical evaluation recommend dispersion not be used due to reasonable concerns about erosion, slope failure or down gradient flooding?				
Is the only location available for the discharge less than 100 feet upgradient of a septic system?				
Is the only area available for the required length of the BMP's flowpath on a slope greater than 20%				
Is the only area available for the required length of the BMP's flowpath above an erosion hazard or toward a landslide hazard area?				
Is the only area available to place the dispersion device (not the flowpath) located in a critical area or critical area buffer?				
Is the only area available to place the dispersion device (not the flowpath) located on a slope greater than 20% or within 50 feet of a geohazard as defined in CCC 40.430?				
Is the only area available to place the dispersion device or required flowpath less than 10 feet from any structure, property line, or sensitive area?				
Determination: Is this BMP feasible? ……				

Guide Sheet 1: Criteria that excludes wetlands from serving as a treatment or flow control BMP/facility

The following types of wetlands are not suitable as a treatment or flow control BMPs/facilities. Engineering structural or hydrologic changes within the wetland itself to improve stormwater flows and water quality are not allowed. Do not increase or decrease the water regime in these wetlands beyond the prescribed limits. Provide these wetlands with the maximum protection from urban impacts:

1. The wetland is currently a Category I wetland because of special conditions (forested, bog, estuarine, Natural Heritage, coastal lagoon).

2. The wetland provides a high level of many functions. These are Category I and II wetlands as determined by the Washington State Wetland Rating System of Western Washington.

3. The wetland provides habitat for threatened or endangered species. Determining whether or not the conserved species will be affected by the proposed project requires a careful analysis in relation to the anticipated habitat changes. Consult with the appropriate agencies with jurisdiction over the specific threatened or endangered species on the site.

If a wetland type listed above needs to be included in a stormwater system then this activity is considered an impact. It will be treated as any other impact and will need to be mitigated according to the rules for wetland mitigation. Project proponents will have to demonstrate that they have done everything to avoid and minimize impacts before proceeding to compensatory mitigation.

The wetlands listed above cannot receive flows from a stormwater system unless the criteria in Book 1, Figure 1.~~5~~4are met.

Guide Sheet 2: Criteria for including wetlands as a treatment or flow control BMP/facility

A wetland can be physically or hydrologically altered to meet the requirements of a <u>treatment or flow control BMP/facility</u> if ALL of the following criteria are met:

Modifications that alter the structure of a wetland or its soils will require permits. Existing functions and values that are lost would have to be compensated/replaced.

1. It is classified in Category IV in the "Washington State Wetland Rating System of Western Washington," or a Category III wetland with a habitat score of 19 points or less.

2. You can demonstrate that there will be "no net loss" of functions and values of the wetland as a result of the structural or hydrologic modifications done to provide control of runoff and water

Minimum Requirement 8 Review Checklist

Minimum Requirement 8 Checklist

Note: An additional Wetland Determination maybe required for wetlands that are not located on the project site.

A. Is there a direct or indirect stormwater discharge to a wetland?

- ☐ Yes **– Go on to Question B**
- ☐ No **–Stop**

B. Is the wetland being included in a treatment or flow control BMP/Facility?

- ☐ Yes – Comply with Guide Sheets 1 and 2 in Appendix 1-~~K~~H. **Stop**
- ☐ No **– Go on to Question C.**

C. Complete a Wetland Rating Form for the receiving wetland using the Washington State Wetland Rating System for Western Washington. Is the wetland classified by the rating form as Category I or Category II?

- ☐ Yes **– Complete the checklist below**
- ☐ No **–Stop**

~~D~~E. Hydroperiod Analysis per Section 1.5.8

- ☐ Monthly change in total discharge volume is 15% or less (per the WWHM); and
- ☐ Change in total discharge volume from any single precipitation event is 20% or less (per the WWHM). **–Stop**
- ☐ Either discharge threshold exceeded. **– Go on to Section E**

~~E~~F. Minimum Requirement 8 is not met

D. Does the wetland provide habitat for threatened or endangered species?
If yes **complete the checklist below**.
If No **Stop**.

Appendix 1-I, Stormwater Site Plan Short Form, is bound separately and may be found on the Clark County web site at www.clark.wa.gov/~~environmental-services~~/stormwater-code-and-manual .
public-works

Appendix 1-J, Abbreviated Construction Stormwater Pollution Prevention Plan (SWPPP), is bound separately and may be found on the Clark County web site at www.clark.wa.gov/~~environmental-services~~ public-works/stormwater-code-and-manual .

Clark County Stormwater Manual 2015

Appendix 1-I

Stormwater Site Plan Short Form

v. January 7, 2016

ERRATA - Strikeout / Underline September 2016

1. Soil Description

A soil description is required for all sites.

☐ Soils on the site are described by a qualified professional in accordance with CCSM Book 1, Section 2.3.1.2, Soil Description.
☐ A Soils Report is attached.

Describe the soils on the site:

_____

_____

_____

_____

2. Infiltration Rate Testing

Infiltration rate testing is required for sites that are proposing to use rain gardens or permeable pavements to fulfill Minimum Requirement #5 (see Section 5).

☐ Infiltration rate testing N/A
☐ Infiltration rate testing conducted by a qualified professional in accordance with CCSM Book 1, Section 2.3.1.4, Infiltration Rate.
☐ Infiltration testing method, logs, results, and rates are attached or described in the Soils Report.

List the infiltration rate(s) found on the site:

_____

_____

_____

3. Groundwater Assessment

A groundwater depth assessment is required if permeable pavement, downspout full infiltration, or rain garden is proposed and the seasonal high groundwater elevation in the area is known to be less than five feet below the proposed surface.

☐ Groundwater depth assessment N/A

Commercial Site Activities

Check any activity that will take place on the site after construction.

☐ Manufacturing
☐ Transportation and Communication Business
☐ Retail and Wholesale Business
☐ Service Business
☐ Public Agency

Documentation

☐ Consult CCSM Book 3 and list all required BMPs to be installed to provide source control for activities checked above, or check ☐ N/A if no activities above are selected:

_____

_____

_____

_____

☐ Show any required structural source control BMPs on the site plan.

Minimum Requirement #4 — Preserve Natural Drainage Systems and Outfalls

Minimum Requirement

Maintain natural and existing drainage patterns through the site and onto adjacent property as much as possible. No new development, redevelopment, or drainage project shall be allowed to materially increase or concentrate stormwater runoff onto an adjacent property or block existing drainage from adjacent lots

Documentation

☐ The natural drainage patterns have been maintained to the maximum extent feasible.

Minimum Requirement #5 — On-site Stormwater Management

Minimum Requirement

Projects must use On-site Stormwater Management BMPs to disperse, infiltrate, and retain stormwater runoff from the site's roofs, driveways, parking areas, patios, and landscaped areas to the extent feasible without causing flooding or erosion impacts.

Description

Stormwater generated from hard surfaces on the site must be infiltrated or dispersed into vegetation on the using BMPs such as rain gardens, infiltration trenches and drywells, and dispersion.

Figure 2: BMP Selection Process for Roofs

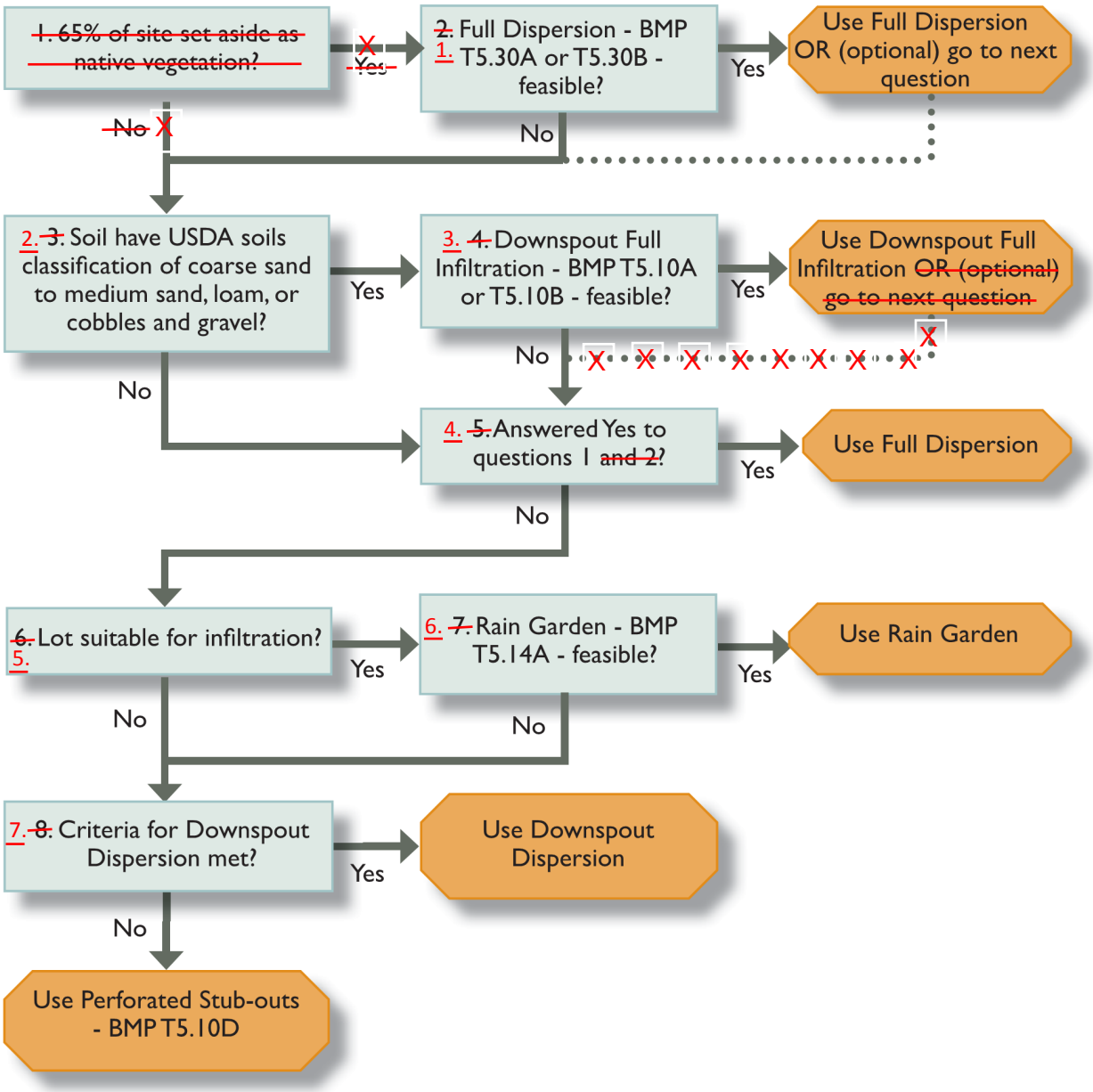

Figure 3: BMP Selection Process for Other Hard Surfaces

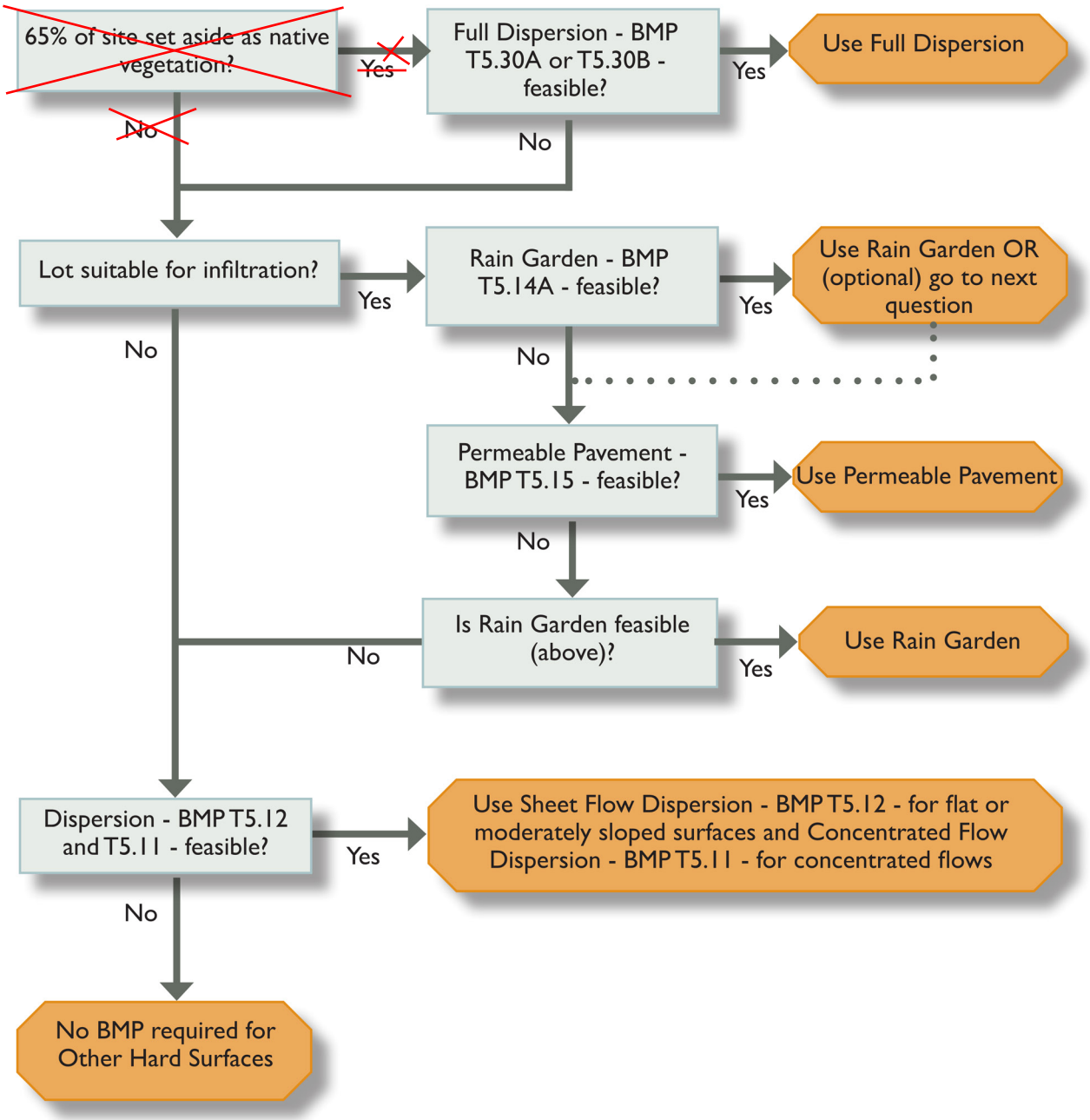

LID Feasibility Checklist

Project Title and Case Number:

_____

Applicant:

_____

_____ Remove this line

Date: _____

TDA #: _____

Instructions: *Fill out a LID Feasibility Checklist for each TDA on the project. Submit the completed checklist with the Site Plan Short Form.*

Step 1: Indicate which type(s) of surfaces will be present within the TDA in Section 1.

Step 2: Consider feasibility criteria and setbacks in Section 2.

Consider feasibility of BMPs below in the order indicated in the required list or table for each surface in the TDA.

Section 1: Surfaces

___ Roof ____ Other Hard Surfaces

Consider feasibility of BMPs below for each surface type in the TDA.

Section 2: Feasibility Criteria

For each type of surface selected in Section 1, above, consider BMPs in the order indicated in the Minimum Requirement #5 section of the Stormwater Site Plan Short Form.

For each question, place a mark in either the Yes or No column. For each No answer, move on to the subsequent question within the BMP. If a Yes answer is given, then the BMP is not feasible in the TDA and is not required in accordance with Minimum Requirement #5. If No answers are given to all questions, then the BMP is feasible in the TDA and must be implemented in accordance with Minimum Requirement #5. When feasibility of the BMP has been determined, then select the appropriate box in the Determination section.

For each surface type, stop at the first BMP that is feasible.

Answers to questions must consider site-specific information, and some may require professional written evaluation as justification.

Design Criteria

Formatting - eliminate underline here

The design criteria and procedures in this section are adapted from the Rain Garden Handbook for Western Washington: A Guide for Design, Installation, and Maintenance (Ecology, 2013). Users may reference the handbook for additional design specifications and construction guidance. If information in the handbook conflicts with information in this manual, the information in this manual shall apply.

Site Considerations

Due to the geologic and topographical conditions in Clark County, not all sites are suitable for rain gardens. A rain garden should not:

1. Be placed over existing utilities. Contact utility locate services in the early design stages.
2. Be located in areas that would require disturbing healthy native soils, trees, and other vegetation—these areas already do a good job of filtering and storing stormwater.
3. Be located where there is high groundwater during the winter. A minimum of one foot of separation is required between the lowest elevation of the rain garden soil or any underlying gravel infiltration layer and the seasonal high groundwater elevation or other impermeable layer.

Pond Area

4. The ponding depth must be 6" minimum and 12" maximum.
5. The pond must have a flat and level bottom.
6. The minimum freeboard measured from the maximum ponding water surface elevation to the top of the facility shall be 2" for drainage areas less than 1,000 square feet and 6" for drainage areas 1,000 square feet or greater.
7. If a berm is used to achieve the minimum top elevation, maximum slope on berm shall be 2H:1V and minimum top width of design berm shall be 1 foot. Berm shall be a material which is water tight. Imported soil may be necessary to ensure berm does not fail. Berm shall be tightly packed during construction.

Sizing Requirement and Procedure

Use this sizing procedure to determine the required area of the top surface of the pond. A rain garden built using this procedure will capture approximately 80% of the water that flows to it.

Size the top surface of the pond by applying a sizing factor determined using the steps below to the total contributing area flowing to the rain garden. If meeting Minimum Requirement #5, in no case shall the sizing factor be less than 5%.

8. Calculate the area of the contributing drainage in square feet.

BMP T5.15: Permeable Pavement

Purpose and Description

Permeable pavements are appropriate in many applications where traditionally impermeable pavements have been used including parking lots, sidewalks, pedestrian and bike trails, driveways, residential access roads, and emergency and facility maintenance roads.

The following are the general categories of permeable paving systems:

- Porous hot or warm-mix asphalt pavement: A flexible pavement similar to standard asphalt, but the fine material is reduced or eliminated, allowing water to infiltrate through voids formed between the aggregate in the pavement surface.
- Pervious Portland cement concrete: A rigid pavement similar to conventional concrete but with the fine aggregate (sand) component reduced or eliminated in the gradation, allowing for infiltration.
- Permeable interlocking concrete pavements (PICP) and aggregate pavers: Solid, precast, manufactured modular units. The solid pavers are (impervious) high-strength Portland cement concrete. Pavements constructed with these units create joints that are filled with permeable aggregates and installed on an open-graded aggregate bedding course. Aggregate pavers (also known as pervious pavers) are distinct from PICPs and include modular precast paving units. The units are made with similar sized aggregates bound together with Portland cement concrete with high-strength epoxy or other adhesives. Like PICP, the joints or openings in the units are filled with open-graded aggregate and placed on an open-graded aggregate bedding course. Aggregate pavers are intended for pedestrian use only.
- Grid systems: Made of concrete or plastic. Both systems can be installed on an open-graded aggregate base as well as a dense-graded aggregate base.

Applications, Limitations and Setbacks

Permeable paving surfaces are an important integrated management practice within the LID approach and can be designed to accommodate pedestrian, bicycle and auto traffic while allowing infiltration, treatment and storage of stormwater.

Limitations

- The Washington State Pollution Control Hearings Board stated in 2014 that permeable pavement is only suitable for "roadways that receive very low traffic volumes and areas of very low truck traffic". This has been interpreted to mean that it's only required to be considered (i.e. review infeasibility criteria) for roadways with an average daily volume of 400 vehicles or less. See ~~Section 2.5.5.3 in Book 2 for a full list of infeasibility criteria, and refer to Table 2.3 for typical applications of pervious pavements~~ infeasibility criteria below.
- No run-on from pervious surfaces is allowed.

Clark County Stormwater Manual 2015

Book 2
BMP Design

November 24, 2015

ERRATA v. strikeout/underline (September 2016)

Requirement #7, Section 1.5.7 of Book 1. Some projects are required to meet both standards. Consult Book 1, Section 1.4 to determine which standard, if any, a project is required to meet.

Use an approved continuous flow model to determine whether or not the proposed stormwater facility or facilities will meet the applicable standard. The models compute the pre-development 2- through 100-year flow frequency values and compute the post-development runoff 2- through 100-year flow frequency values from the outlet of the proposed stormwater facility. The models use pond discharge data to compare the pre-development and post-development durations to allow the user to determine if the applicable flow duration standard has been met.

1.3.1.1 Low Impact Development Performance Standard

As defined in Minimum Requirement #5, Section 1.5.~~2~~5.2 of Book 1, the LID Performance Standard is:

> Stormwater discharges shall match developed discharge durations to pre-developed durations for the range of pre-developed discharge rates from 8% of the 2-year peak flow to 50% of the 2-year peak flow.

The flow duration values are compared to the following criterion for the LID Performance Standard:

> If the post-development flow duration values exceed any of the pre-development flow levels between 8% and 50% of the 2-year pre-development peak flow values then the LID Performance Standard has not been met.

1.3.1.2 Flow Control Standard

As defined in Minimum Requirement #7, Section 1.5.7.3 of Book 1, the standard flow control requirement is:

Stormwater discharges shall match developed discharge durations to pre-developed durations for the range of pre-developed discharge rates from 50% of the 2-year peak flow up to the full 50-year peak flow.

There are three criteria by which flow duration values are compared for the Flow Control Standard:

1. If the post-development flow duration values exceed any of the pre-development flow levels between 50% and 100% of the 2-year pre-development peak flow values (100 Percent Threshold) then the Flow Control Standard has not been met.

2. If the post-development flow duration values exceed any of the pre-development flow levels between 100% of the 2-year and 100% of the 50-year pre-development peak flow values more than 10 percent of the time (110 Percent Threshold) then the Flow Control Standard has not been met.

Setbacks

- 100 feet from closed or active landfills.
- 10 feet from any sewage disposal drain field, including reserve areas and grey water reuse systems.
- 100 feet up gradient from any septic system unless site topography clearly prohibits subsurface flows from intersecting the drain field.
- 10 feet from an underground storage tank and its connecting pipes that is used to store petroleum products, chemical, or liquid hazardous wastes in which 10% or more of the storage volume of the tank and connecting pipes is beneath the ground.
- 10 feet from any structure, property line, or sensitive area (except slopes over 40%). However, if the roof downspout infiltration system is a common system shared by two or more adjacent residential lots and contained within an easement for maintenance given to owners of all residential properties draining to the system, then the setback from the property line(s) shared by the adjacent lots may be waived.

Design Criteria

- Drywell bottoms must be a minimum of 1 foot above seasonal high groundwater level or impermeable soil layers
- Drywells shall contain a minimum volume of gravel:
    - If located in co~~u~~arse sands and cobbles (defined as a particle size of 2mm or greater in accordance with ASTM D422-63 particle size analysis), at least 60 cubic feet of gravel per 1,000 square feet of impervious surface served.
    - If located in medium sands (defined as 0.5 mm to 2 mm in accordance with ASTM D422-63 particle size analysis), at least 90 cubic feet of gravel per 1,000 square feet of impervious surface served.
- Drywells shall be at least 4 feet in diameter and deep enough to contain the gravel amounts specified above for the soil type and impervious surfaced served.
- Choking stone or filter fabric (geotextile) shall be placed on top of the drain rock and filter fabric shall be placed on drywell sides prior to backfilling. Filter fabric shall not be placed on the bottom.
- Spacing between drywells shall be a minimum of 10 feet.
- A geotechnical analysis and report is required on slopes over 15% or if located within 200 feet of the top of slope steeper than 40%, or in a landslide hazard area.

Runoff Modeling Representation

- If roof runoff is infiltrated according to the requirements of this section, the roof area may be removed from the project area used for sizing stormwater facilities.

Cross Reference Guide

Soils Assessment	NA
Meets Minimum Requirements	#5
Related BMPs	None
Selection Criteria	Book 1, Sections 2.2 and 2.5.1
Maintenance	Book 4

ADD:
Perforated stub outs do not provide pretreatment. Perforated stub outs are not allowed to drain into a subsurface detention or retention facility without first connecting to a pretreatment BMP under Minimum Requirement #6.

Applications, Limitations and Setbacks

In projects subject to Minimum Requirement #5 perforated stub-out connections may be used only when all other higher priority on-site stormwater management BMPs are not feasible, per the criteria for each of those BMPs.

Perforated stub-outs cannot be used when the seasonal water table is less than one foot below trench bottom.

A perforated stub-out may also be used where implementation of downspout dispersion might cause erosion or flooding problems, either on site or on adjacent lots.

Select the location of the connection to allow a maximum amount of runoff to infiltrate into the ground (ideally a dry, relatively well drained, location). To facilitate maintenance, do not locate the perforated pipe portion of the system under impervious or heavily compacted (e.g., driveways and parking areas) surfaces.

Have a licensed geologist, hydrogeologist, or engineering geologist evaluate potential runoff discharges towards landslide hazard areas. Do not place the perforated portion of the pipe on or above slopes greater than 20% or above erosion hazard areas without evaluation by a professional engineer with geotechnical expertise or qualified geologist.

For sites with septic systems, the perforated portion of the pipe must be downgradient of the drainfield primary and reserve areas. This requirement can be waived if site topography will clearly prohibit flows from intersecting the drainfield or where site conditions (soil permeability, distance between systems, etc.) indicate that this is unnecessary.

Setbacks

Setbacks shall be the same as for downspout infiltration trenches provided in BMP T5.10A.

Setbacks

- 100 feet upgradient from any septic system unless site topography clearly indicates that subsurface flows will not intersect the drainfield.
- 10 feet from any structure, property line, or sensitive area.
- 50 feet from a geohazard area per CCC 40.430.

Design Criteria

- Each Concentrated Flow Dispersion BMP can serve a drainage area up to 700 square feet.
- A vegetated flow path of at least 50 feet shall be maintained between the discharge point and any property line, structure, steep slope (>20%), stream, lake, wetland, lake, or other impervious surface, unless a dispersion trench is used.
- When a dispersion trench per BMP T5.10C is used, the vegetated flow path described above can be reduced to 25 feet. A pad of crushed rock (a minimum of 2 feet wide by 3 feet long by 6 inches deep) shall be placed at each discharge point unless a dispersion trench per BMP T5.10C is being used.
- No erosion or flooding of downstream properties shall result.
- Any runoff discharged towards landslide hazard areas shall be evaluated by a geotechnical engineer or qualified geologist. The discharge point shall not be placed on or above slopes greater than 20%, or above erosion hazard areas, without evaluation by a geotechnical engineer or qualified geologist and approval by Clark County.
- For sites with septic systems, the discharge point must be at least ten feet below the elevation of the drainfield primary and reserve areas. Clark County may waive this requirement during plan approval if site topography clearly prohibits flows from intersecting the drainfield.

Runoff Modeling Representation

Where BMP T5.11- Concentrated Flow Dispersion - is used to disperse impervious area runoff into an undisturbed native landscape area or an area that meets BMP T5.13, and the vegetated flow path is at least 50 feet, the impervious area may be modeled as a landscaped area. Where the vegetated flow path is 25 – 50 feet, using a dispersion trench (see BMP T5.10C) allows modeling the impervious area as 50% impervious/50% landscape. Do this in WWHM 3 on the Mitigated Scenario screen by entering the dispersed impervious area into one of the entry options for dispersal of impervious area runoff. For procedures in WWHM 2012, see Appendix 2-C.

ERRATA September 2016

- A topsoil layer with:
  - A minimum organic matter content of 10% dry weight in planting beds.
  - 5% organic matter content in turf areas.
  - A pH from 6.0 to 8.0 or matching the pH of the undisturbed soil.
  - A minimum topsoil layer depth of 8 inches except where tree roots do not allow this.
- Subsoils below the topsoil layer should be scarified at least 4 inches with some incorporation of the upper material to avoid stratified layers, where feasible.
- Mulch planting beds with 2 inches of organic material.
- Compost and other materials shall meet the following requirements for organic content:
  - The organic content for pre-approved (by Ecology) amendment rates can be met only using compost meeting the compost specification for Bioretention (~~BMP T7.30~~ BMP T5.14B), with the exception that the compost may have up to 35% biosolids or manure. The compost must also have an organic matter content of 40% to 65%,and a carbon to nitrogen ratio below 25:1. The carbon to nitrogen ratio may be as high as 35:1 for plantings composed entirely of plants native to the Portland/Vancouver region.
  - Calculated amendment rates may be met through use of composted material meeting (a.) above; or other organic materials amended to meet the carbon to nitrogen ratio requirements, and not exceeding the contaminant limits identified in Table 220-B, Testing Parameters, in WAC 173-350-220.
- The resulting soil should be conducive to the type of vegetation to be established.

- Only one of these methods can be used to meet the above criteria for a specific area on the site:
  - Native vegetation and soil should remain undisturbed and protected from compaction during construction.
  - Amend existing topsoil or subsoil either at default "pre-approved" rates, or at custom calculated rates based on soil tests of the soil and amendments.
  - Stockpile existing topsoil during grading and replace it over disturbed areas prior to planting. Stockpiled topsoil must also be amended if needed to meet the organic matter or depth requirements, either at a default "pre-approved" rate or at a custom calculated rate.
  - Import topsoil mix of sufficient organic content and depth to meet the requirements.
  - More than one method may be used on different portions of the same site. Soil that already meets the depth and organic matter quality standards need not be amended.

- Shall have a Carbon to Nitrogen ratio less than 25:1. May be up to 35:1 if planting composed entirely of Puget Sound Lowland native species or up to 40:1 for coarse compost used as a surface mulch (not in a soil mix).

Because bioretention can add phosphorus to stormwater from soil amendments and/or plant material, if the site is within ¼ mile of a phosphorus-sensitive waterbody, imported compost shall not be used unless underlying soils meet the criteria for treatment as described in Section 3.1.5.3.

Custom BSM

For a custom B~~MS~~SM, the requirements are:

- CEC at least 5 milliequivalents per 100 grams of dry soil.
- pH between 5.5 and 7.0.
- 5-8% organic matter before and after saturated hydraulic conductivity test.
- 2-5% fines passing #200 sieve.
- Measured (initial) hydraulic conductivity less than 12 inches per hour.
- Design (long-term) hydraulic conductivity greater than 1 inch per hour.
- If compost is used in creating the custom mix, it must meet all of the specifications listed above for compost.

BSM Infiltration Rate

Option 1: If using the Bioretention Soil Mix recommended herein, the WWHM assumes a default infiltration rate of 12 inches per hour (15.24 cm/hr).

- ~~If the standard soil mix is used:~~
  - ~~1.5~~ 3 ~~inches per hour shall be used if the drainage area to the facility has over 10,000 square feet of impervious surface, over 5,000 ft^2 of pollution-generating impervious surface, the project converts at least ¾ acres of native vegetation to lawn/landscaping, or the project converts at least 2.5 acres of native vegetation to pasture.~~
  - ~~3~~ 6 ~~inches per hour may be used if none of the above criteria are exceeded.~~
- ~~If a custom soil mix is used:~~ [Add "Option 2" as noted on page 68, red box at bottom of page]
  - ~~Use ASTM D 2434 Standard Test Method for Permeability of Granular Soils (Constant Head) with a compaction rate of 85% using ASTM D1557 Test Method for Laboratory Compaction Characteristics of Soil Using Modified Effort.~~
  - ~~If the drainage area to the facility has over 10,000 ft^2 of impervious surface, over 5,000 ft^2 of pollution-generating impervious surface, the project converts at least ¾ acres of native vegetation to lawn/landscaping, or the project converts at least 2.5 acres of native vegetation to pasture, use 0.25 as the correction factor for the infiltration rate.~~
  - ~~If none of the above criteria are exceeded, 0.5 may be used as the infiltration rate correction factor.~~

- A minimum diameter of 4 inches.
- A slotted subsurface drain shall be PVC pipe in accordance with WSDOT standard specification 9-05.2(6) Perforated PVC Underdrain Pipe. Perforated PVC underdrain pipe shall meet the requirements of AASHTO M 278. For Pipe larger than 8 inch diameter refer to section 9-05.(7) and 9-05.2(8).
- Slots must be cut perpendicular to the long axis of the pipe and be 0.04 to 0.069 inches by 1 inch long and be spaced 0.25 inches apart. Slots should be arranged in four rows spaced on 45-degree centers and cover half the circumference of the pipe.
- A minimum slope of 0.5% unless otherwise specified by an engineer.

- Perforated PVC or flexible slotted HDPE pipe cannot be cleaned with pressurized water or root cutting equipment, are less durable and are not allowed. Wrapping the under-drain pipe in filter fabric increases chances of clogging and is not allowed. A 6-inch rigid non-perforated observation pipe or other maintenance access should be connected to the under-drain every 250 to 300 feet to provide a clean-out port, as well as an observation well to monitor dewatering rates.

Under-drain Aggregate Filter and Bedding Layer

Aggregate filter and bedding layers buffer the under-drain system from sediment input and clogging. When properly selected for the soil gradation, geosynthetic filter fabrics can provide adequate protection from the migration of fines. However, aggregate filter and bedding layers, with proper gradations, provide a larger surface area for protecting under-drains and are preferred.

- Guideline for under-drain aggregate filter and bedding layers with heavy walled slotted pipe (see under-drain pipe guideline above): Use Gravel Backfill for Drains conforming to WSDOT Specification 9-03.12(4).
- Place under-drain on a bed of the aggregate with a minimum thickness of 6 inches and cover with aggregate to provide a 1-foot minimum depth around the top and sides of the slotted pipe.

Orifice and Other Flow Control Structures

- The minimum orifice diameter should be 0.5 inches to minimize clogging and maintenance requirements.

[This edit is the last bullet on page 66: Add the following verbiage]

Option 2: If creating a custom bioretention soil mix, Use ASTM D 2434 Standard Test Method for Permeability of granular Soils (Constant Head) with a compaction rate of 85 percent using ASTM D1557 Test Method for Laboratory Compaction Characteristics of Soil Using Modified Effort. The WWHM user must enter the derived value into WWHM using "View/ Edit Soil Types" pull down menu and adjusting the Ksat value. After selecting option 1 or 2 above, determine the appropriate safety factor for the saturated hydraulic conductivity (Ksat). If the contributing area of the bioretention cell or swale is equal to or exceeds any of the following limitations: 5,000 square feet of pollution-generating impervious surface; 10,000 square feet of impervious surface; ¾ acre of lawn and landscape, use 4 as the infiltration rate (Ksat) safety factor. If the contributing area is less than all of the above areas, or if the design includes a pretreatment device for solids removal, use 2 as the Ksat safety factor. The WWHM has a field for entering the appropriate safety factor.

Applications, Limitations and Setbacks

Permeable paving surfaces are an important integrated management practice within the LID approach and can be designed to accommodate pedestrian, bicycle and auto traffic while allowing infiltration, treatment and storage of stormwater. Table 2.4 shows typical applications for the different types of permeable pavement.

Limitations

- The Washington State Pollution Control Hearings Board stated in 2014 that permeable pavement is only suitable for "roadways that receive very low traffic volumes and areas of very low truck traffic". This has been interpreted to mean that it's only required to be considered (i.e. review infeasibility criteria) for roadways with an average daily volume of 400 vehicles or less. See Section 2.5.5.3 in Book ~~2~~ 1 for a full list of infeasibility criteria, and refer to Table 2.4 for typical applications of pervious pavements.
- ~~No run-on from pervious surfaces is allowed.~~
- Unless the pavement, base course, and subgrade have been designed to accept runoff from adjacent impervious surfaces, slope impervious runoff away from the permeable pavement to the maximum extent practicable. Sheet flow from up-gradient impervious areas is not recommended, but permissible if the porous surface flow path is greater than the impervious surface flow path.

Run-on from pervious surfaces is not allowed, except from minor or incidental pervious areas that cannot be directed elsewhere. Those areas must be fully stabilized before discharging runoff to the pervious pavement.

Setbacks

The following setbacks are required for permeable pavements:

- 50 feet from the top of slopes greater than 20% with more than 10 feet of vertical relief.
- 100 feet from a landfill (active or closed).
- 100 feet from a drinking water well or a spring used for drinking water, if the pavement is a pollution-generating surface.
- 10 feet from on-site sewage drainage.
- 10 feet from an underground storage tank and its connecting pipes that is used to store petroleum products, chemicals, or liquid hazardous waste in which 10% or more of the storage volume of the tank and connecting pipes is beneath the ground.
- 100 feet from an area with known deep soil contamination.

BMP T5.30A: Full Dispersion

Purpose and Description

This BMP allows for "fully dispersing" runoff from impervious surfaces and cleared areas of development sites that protect at least 65% of the site (or a threshold discharge area on the site) in a forest or native condition.

Cross Reference Guide

Soils Assessment	None
Minimum Requirements	MR #5
Related BMPs	BMP T5.13
Selection/Infeasibility Criteria	Book 1, Section 2.5.3
Maintenance	None

Applications, Limitations and Setbacks

- BMP T5.30A Full Dispersion is used in the following situations:
- Rural single family residential developments should use these dispersion BMPs wherever possible to minimize effective impervious surface to less than 10% of the development site.
- Other types of development that retain 65% of the site (or a threshold discharge area on the site) in a forested or native condition may also use these BMPs to avoid triggering the flow control facility requirement.
- The preserved area may be a previously cleared area that has been replanted in accordance with native vegetation landscape specifications described within this BMP.

Setbacks

Because Full Dispersion relies on the dispersion devices and design criteria for various dispersion BMPs, setbacks for each type of dispersion BMP used to achieve full dispersion shall be observed.

Design Criteria

Developments that preserve 65% of a site (or a threshold discharge area of a site) in a forested or native condition can disperse runoff from the developed portion of the site into the native vegetation area as long as the developed areas draining to the native vegetation do not have impervious areas that exceed 10% of the entire site.

BMP T5.30B: Dispersion to Pasture or Cropland

Purpose and Description

This LID BMP consists of fully dispersing runoff by directing it onto a pasture or cropland surface where it can be dispersed, infiltrated, evaporated, and consumed by plant uptake.

Cross Reference Guide

Soils Assessment	None
Minimum Requirements	MR #5
Related BMPs	BMP T5.30A.
Selection/Infeasibility Criteria	Book 1, Section 2.5.3
Maintenance	None

Figure 2.30: Cropland in Clark County Suitable for Full Dispersion to Pasture or Cropland

Applications, Limitations and Setbacks

On a single-family residential lot or an agriculture parcel or parcels under the same ownership and greater than 22,000 square feet, full dispersion onto pasture and croplands is allowed when in compliance with the following criteria:

- Crop land shall consist of land used to grow grass, grain, or row crops also including berries, nursery stock and orchards.
- The crop or pasture land shall be under the same ownership as the project site.
- The total site area shall consist of at least 75 percent cropland, and no more than 15 percent of the site draining to the dispersion area shall be impervious surfaces. Less stringent ratios of sending land and receiving land uses may be submitted, with supporting modeling results showing flow control requirements are satisfied for the site.
- No more than 10 percent of the pasture or cropland used for dispersion shall be used for purposes other than plant growth (for example, but not limited to, unpaved roads, staging areas, equipment storage, animal pens, haystacks, wheel lines, campsites, trails, etc.).
- Runoff from a driveway through the dispersion area shall be dispersed per BMP T5.11 or BMP T5.12 and shall have a flow path exceeding 300 feet.
- Land used for dispersion shall be downslope from building sites and shall not exceed 5% slope.
- There shall be a minimum 3-foot depth to the average annual maximum groundwater elevation.
- The length used for dispersion shall be 300 feet or greater.
- The preserved area is not required to be placed in a separate tract or recorded easement.
- The Applications, Limitations and Setbacks for BMP T5.30A shall also apply to this BMP. Where conflicts between the requirements in BMP T5.30A and the requirements in this BMP occur, the requirements for this BMP shall apply.

Setbacks

- 100 feet upgradient from any septic system unless site topography clearly indicates that subsurface flows will not intersect the drainfield.
- 10 feet from any structure, property line, or sensitive area.
- 50 feet from a geohazard area per CCC 40.430.

Design Criteria

Runoff shall evenly sheet flow onto dispersion areas naturally or via a dispersion trench or other structure designed to evenly spread and dissipate concentrated flows into sheet flow.

Cross Reference Guide

Soils Assessment	None
Minimum Requirements	MR #5
Related BMPs	None.
Selection/Infeasibility Criteria	None
Maintenance	None

Applications, Limitations and Setbacks

New development often takes place on tracts of forested land. In fact, building sites are often selected because of the presence of mature trees. However, unless sufficient care is taken and planning done, in the interval between buying the property and completing construction much of this resource is likely to be destroyed. The property owner is ultimately responsible for protecting as many trees as possible, with their understory and groundcover. This responsibility is usually exercised by agents, the planners, designers and contractors. It takes 20 to 30 years for newly planted trees to provide the benefits for which trees are so highly valued.

Forest and native growth areas allow rainwater to naturally percolate into the soil, recharging groundwater for summer stream flows and reducing surface water runoff that creates erosion and flooding. Conifers can hold up to about 50 percent of all rain that falls during a storm. Twenty to 30 percent of this rain may never reach the ground but evaporates or is taken up by the tree. Forested and native growth areas also may be effective as stormwater buffers around smaller developments.

On lots that are one acre or greater, preservation of 65 percent or more of the site in native vegetation will allow the use of full dispersion techniques presented in BMP T5.30A. Sites that can fully disperse are not required to provide runoff treatment or flow control facilities.

Design Criteria

- The preserved area should be situated to minimize the clearing of existing forest cover, to maximize the preservation of wetlands, and to buffer stream corridors.
- The preserved area should be placed in a separate tract or protected through recorded easements for individual lots.
- If feasible, the preserved area should be located downslope from the building sites, since flow control and water quality are enhanced by flow dispersion through duff, undisturbed soils, and native vegetation.

- The preserved area should be shown on all property maps and should be clearly marked during clearing and construction on the site.
- The preserved area must be protected during construction using the following techniques:
    - Secure visible fencing around the preserved vegetation at or beyond the dripline.
    - Do not stockpile materials within the fenced protection area.
    - Do not disturb the ground within the fenced protection area.
- The preserved area must be marked after construction is complete with at least one sign placed every 150' around the perimeter declaring the area as a protected natural area. See ~~Figure 9.11~~ Figure 1.14 in Book 1, Standard Clark County Vegetation Preservation Sign, for required signage.

Runoff Modeling Representation

- None.

Cross reference guide (continued)

Maintenance	None

Design Criteria

- **Define Development Envelope and Protected Areas -** The first step in site planning is to define the development envelope. This includes identifying protected areas, setbacks, easements and other site features as well as consulting applicable standards and requirements in Title 40 of the Clark County Code. Features to be protected can include:
    - Important existing trees.
    - Steep slopes.
    - Erosive soils.
    - Riparian areas.
    - Wetlands.

  A compact development envelope can help minimize environmental impacts, reduce construction costs and preserve aesthetically pleasing landscape features.

- **Minimize Directly Connected Impervious Areas -** Impervious areas directly connected to the storm drain system are the greatest contributors to urban nonpoint source pollution. Any impervious surface that drains into a catch basin or other conveyance structure is a "directly connected impervious surface." Minimizing these areas can be done by limiting overall impervious land coverage or by infiltrating and/or dispersing runoff from these areas.

- **Maximize Permeability –** Steps towards maximizing permeability include limiting impervious areas, paving with permeable materials, clustering buildings and by designing buildings with smaller footprints. Permeable/porous pavements can be used in place of traditional concrete or asphalt pavements in many low traffic applications.

  Maximizing permeability at every opportunity requires the integration of many small strategies, from site planning to material selection.

  In addition to the environmental and aesthetic benefits, a high-permeability site plan may allow the reduction or elimination of expensive runoff underground conveyance systems, flow control and treatment facilities, saving money on development costs.

- **Build Narrower Streets -** Street design carries with it key impacts on stormwater quantity. In residential development, streets and other transportation-related structures often comprise between 60 and 70 % of the total impervious area. Additionally, streets are almost always directly connected to the stormwater conveyance system. Street design is described in Clark County Code, Title 40. Most local standards require large areas with impervious surfaces. In recent years, new standards that reduce impervious land coverage have been gaining acceptance. These standards generally create a new class of street that is narrower than the usual local street

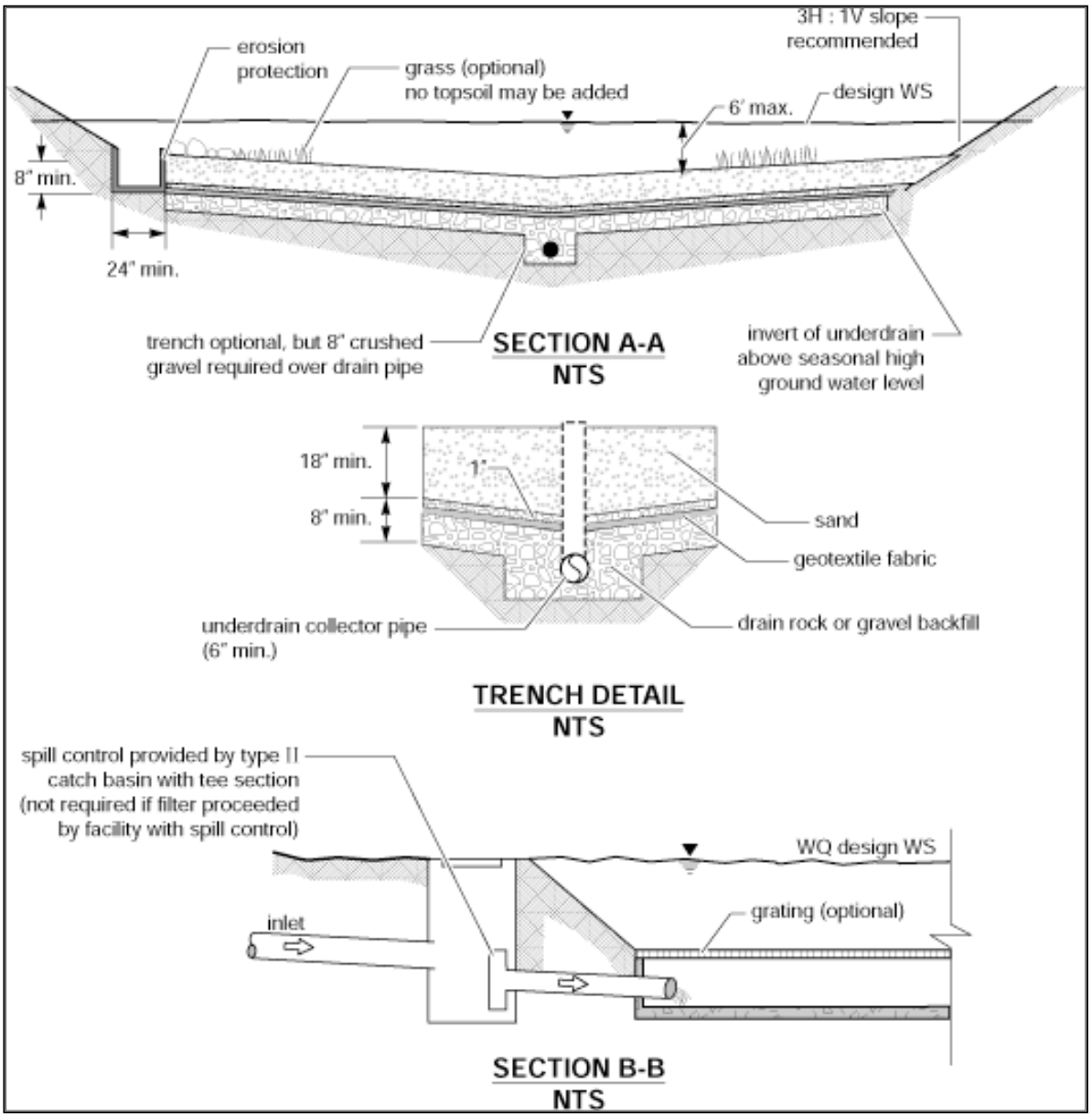

Figure 4.10: Sand Filter with Flow Spreader - ~~Plan~~ Section View

(Source: Department of Ecology)

BMP T8.30: Linear Sand Filter

Purpose and Description

Linear sand filters are typically long, shallow, two-celled, rectangular vaults. The first cell is designed for settling coarse particles, and the second cell contains the sand bed. Stormwater flows into the second cell via a weir section that also functions as a flow spreader.

Cross Reference Guide

Soils Assessment	None
Minimum Requirements/ Treatment Type	MR #6 Basic (when combined with a pretreatment BMP) Phosphorus, or Enhanced with treatment train
Related BMPs	BMP T6.10 for pretreatment BMP T9.40 for a treatment train
Selection/Infeasibility Criteria	Book 1, Section 3.2 and Section 3.4.2
Maintenance	Book 4

Application, Limitations and Setbacks

Linear sand filters are normally used in the following situations:

- In long narrow spaces such as the perimeter of a paved surface.
- As a part of a treatment train downstream of a filter strip, upstream of an infiltration system, or upstream of a wet pond or a biofilter for oil control.
- To treat small drainages (less than 2 acres of impervious area).
- To treat runoff from high-use sites for TSS and oil/grease removal, if applicable.

For Cross Reference refer to BMP T8.10 Basic Sand Filter Basin

Setbacks

See Section 3.1.4.

Design Criteria

- The two cells must be divided by a divider wall that is level and extends a minimum of 12 inches (minimum of 6 inches) above the sand bed.

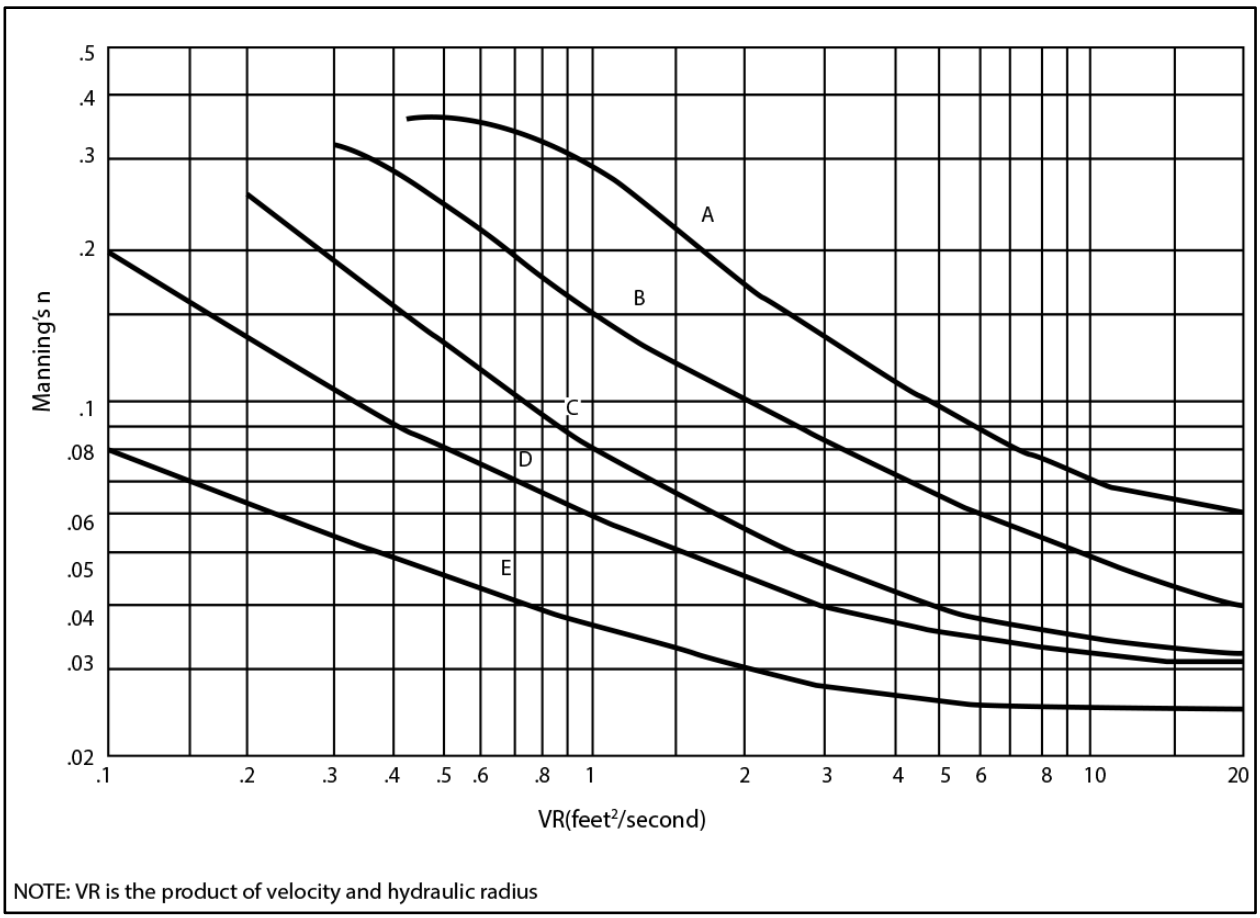

Figure 4.22: Relationship of Manning's n with VR

(Source: redrawn from Livingston, et al, 1984)

Completion Step (CO)

- **CO.** Review all of the criteria and guidelines for biofilter planning, design, installation, and operation above and specify all of the appropriate features for the application.

Soil Criteria

- The following top soil mix at least 8-inch deep:
  - Sandy loam 60-90 %
  - Clay 0-10 %
  - Composted organic matter, (excluding animal waste, toxics) 10-30 %

Use compost amended soil where practicable. Composted material shall meet the specifications for compost used in the Bioretention Soil Media (BMP ~~T7.30~~ 5.14B). This excludes use of biosolids and manures.

- Till to at least 8-inch depth

Soil/Compost Mix

- Presumptive approach: Place and rototill 1.75 inches of composted material into 6.25 inches of soil (a total amended depth of about 9.5 inches), for a settled depth of 8 inches. Water or roll to compact soil to a maximum of 85% Standard Proctor. Plant grass.
- Custom approach: Place and rototill the calculated amount of composted material into a depth of soil needed to achieve 8 inches of settled soil at 5% organic content. Water or roll to compact soil to a maximum of 85% Standard Proctor. Plant grass. The amount of compost or other soil amendments used varies by soil type and organic matter content. If site soils already have relatively high organic content, then it may be possible to modify the pre-approved rate described above and still achieve the 5% organic content target.
- The final soil should have an initial saturated hydraulic conductivity less than 12 inches per hour and minimum long-term hydraulic conductivity of 1 inch per hour per ASTM Designation D 2434 (Standard Test Method for Permeability of Granular Soils) at 85% compaction per ASTM Designation D 1557 (Standard Test Method for Laboratory Compaction Characteristics of Soil Using Modified Effort. Infiltration rate and hydraulic conductivity are assumed to be approximately the same in a uniform mix soil. Note: Long term saturated hydraulic conductivity is determined by applying the appropriate infiltration correction factors as explained under "Determining Bioretention soil mix infiltration rate" under BMP ~~T7.30~~ 5.14B.
- The final soil mixture should have a minimum organic content of 5% by dry weight per ASTM Designation D 2974 (Standard Test Method for Moisture, Ash and Organic Matter of Peat and Other Organic Soils) (Tackett, 2004).
- Achieving the above recommendations will depend on the specific soil and compost characteristics. In general, the above recommendations can be achieved with 60% to 65% loamy sand mixed with 25% to 30% compost or 30% sandy loam, 30% coarse sand, and 30% compost.
- The final soil mixture should be tested prior to installation for fertility, micronutrient analysis, and organic material content.
- Clay content for the final soil mix should be less than 5%.
- Compost must not contain biosolids, any street or highway sweepings, or any catch basin solids.
- The pH for the soil mix should be between 5.5 and 7.0
    - If the pH falls outside the acceptable range, it may be modified with lime to increase the pH or iron sulfate plus sulfur to lower the pH. The lime or iron sulfate must be mixed uniformly into the soil prior to use in LID areas.
- The soil mix should be uniform and free of stones, stumps, roots, or other similar material larger than 2 inches.
- When placing topsoil, it is important that the first lift of topsoil is mixed into the top of the existing soil. This allows the roots to penetrate the underlying soil easier and helps prevent the formation of a slip plane between the two soil layers.
- The soil component of the mix should be loamy sand by the USDA soil texture classification

- The compost component should conform to the same classifications as those for the compost in BMP ~~T7.30~~ 5.14B bioretention.

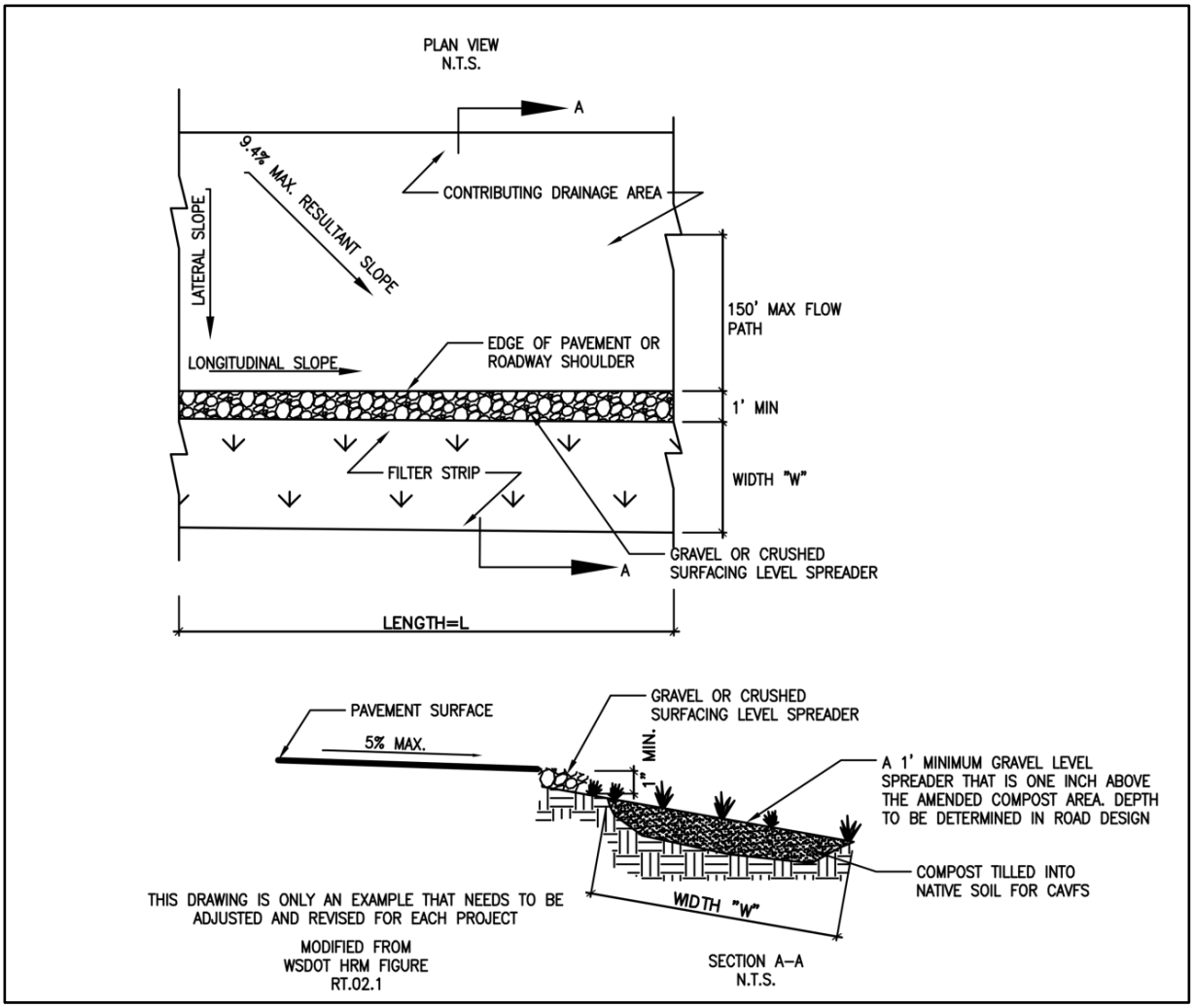

Figure 4.25: Compost Amended Vegetated Filter Strip Typical

(Source: redrawn from Highway Runoff Manual)

Runoff Modeling Representation

- The CAVFS will have an "Element" in the approved continuous flow models that must be used for determining the amount of water that is treated by the CAVFS. To fully meet treatment requirements, 91 percent of the influent runoff file must pass through the soil profile of the CAVFS. Water that merely flows over the surface is not considered treated. Approved continuous flow models should be able to report the amount of water that it estimates will pass through the soil profile.

Sizing Procedure

- Step 1: Identify required wetpool volume. A basic wetpond requires a volume equal to or greater than the total volume of runoff from the 6-month, 24-hour storm event or the Water Quality Design Storm Volume indicated by an approved continuous flow model. A large wetpond requires a volume at least 1.5 times the total volume of runoff from the 6-month, 24-hour storm event or the Water Quality Design Storm Volume identified by an approved continuous flow model.
- Step 2: Determine wetpool dimensions. Determine the wetpool dimensions satisfying the design criteria outlined below and illustrated in Figure 4.26 and 4.27 ~~and 4.28~~. A simple way to check the volume of each wetpool cell is to use the following equation:

$$V = \frac{h(A_1 + A_2)}{2}$$

Where:

- V = wetpool volume (cf)
- h = wetpool average depth (ft)
- A_1 = water quality design surface area of wetpool (sf)
- A_2 = bottom area of wetpool (sf)

- Step 3: Design pond outlet pipe and determine primary overflow water surface. The pond outlet pipe shall be placed on a reverse grade from the pond's wetpool to the outlet structure.
- Step 4: Determine wetpond dimensions.

Wetpool Geometry

- The wetpool shall be divided into two cells separated by a baffle or berm. The first cell shall contain between 25 to 35 percent of the total wetpool volume. The baffle or berm volume shall not count as part of the total wetpool volume. The term baffle means a vertical divider placed across the entire width of the pond, stopping short of the bottom. A berm is a vertical divider typically built up from the bottom, or if in a vault, connects all the way to the bottom.

  Intent: The full-length berm or baffle promotes plug flow and enhances quiescence and laminar flow through as much of the entire water volume as possible. Alternative methods to the full-length berm or baffle that provide equivalent flow characteristics may be approved on a case-by-case basis by the Responsible Official

  - A flow length-to-width ratio greater than the 3:1 minimum is desirable. If the ratio is 4:1 or greater, then the dividing berm is not required, and the pond may consist of one cell rather than two. A one-cell pond must provide at least 6-inches of sediment storage depth. A one cell pond must also provide a minimum depth of 4 feet for the volume equivalent to the first cell of a two-cell design.

- The base of all infiltration basins or trench systems shall be greater than or equal to five feet above the seasonal high-water mark, bedrock (or hardpan) or other low permeability layer. A separation down to three feet may be considered if the groundwater mounding analysis, volumetric receptor capacity, and the design of the overflow and/or bypass structures are judged by the site professional to be adequate to prevent overtopping.
- Reference BMP D6.10, in Section 6.2 for Overflow and Emergency Overflow design criteria.

Reference BMP D6.10 and BMP 6.20 for landscape requirements at stormwater facilities.

5.1.1.1 Setbacks

Infiltration facility setbacks shall be per Table 5.1.

Table 5.1: Stormwater Infiltration Facility Setbacks

Stormwater infiltration facility setback from:	Distance
Drinking water wells	100 feet minimum
Building foundations	20 feet minimum from the downslope side of foundations 100 feet minimum from the upslope side of foundations These setbacks may be increased or decreased based on engineering analysis that shows the performance of the building's foundation system will not be adversely affected by the presence of the stormwater facility
Slopes equal to or greater than 15%	50 feet minimum from the crests of slopes. This setback may be increased or decreased based on engineering analysis that shows the stability of the slope will not be adversely affected by the presence of the stormwater facility.
Property lines	20 feet from any property line. However, if an infiltration trench is a common system shared by the two or more adjacent lots and contained within an easement for maintenance given to owners of all lots draining to the system, then the setback from the property line(s) shared by the adjacent lots may be waived.

5.1.1.2 Groundwater Mounding Analysis

Groundwater mounding occurs under infiltration areas where the infiltration of stormwater causes the water under the infiltration facility to "mound up" before dispersing into the ground. This can occur where groundwater or a low permeability soil layer is near the surface. Groundwater mounding can reduce infiltration rates and cause the failure of infiltration facilities.

A groundwater mounding analysis shall be conducted at all sites where the following occurs:

- The depth to either the seasonal groundwater table or a low permeability soil stratum is less than five feet from the infiltration facility bottom; or
- The depth to the seasonal groundwater table or low permeability stratum is less than 15 feet, and the effective impervious area contributing runoff to the infiltration facility is greater than one acre.

Groundwater modeling (mounding analysis) of the proposed infiltration facility shall be done using the design infiltration rate and the estimated maximum groundwater elevation determined for the proposed facility location.

The design infiltration rate determined above can be used as input to an approved continuous flow model to do an initial sizing. Then complete the groundwater modeling (mounding analysis) of the proposed infiltration facility. Use MODRET or an equivalent model.

Export the full output hydrograph of the developed condition and use it as model input. Note that an iterative process may be required beginning with an estimated design rate, WWHM (or MGSFlood) sizing, then groundwater model testing.

5.1.1.3 Pretreatment Facility Design Criteria

~~A facility to treat~~ Pretreatment of stormwater influent for suspended solids ~~must precede the~~ is required for each infiltration facility. Use either an option under the basic treatment facility menu or the pretreatment menu (See Book 1, Chapter 3 for menus). Pretreatment is important in preserving the life of the facility. The lower the influent suspended solids loading to the infiltration facility, the longer the infiltration facility can infiltrate the designed amount of stormwater.

5.1.1.4 Construction Criteria

This information must be included on the construction drawings for all infiltration facilities.

- Conduct initial basin excavation to within 1-foot of the final elevation of the basin floor. For open infiltration systems, rough excavating using heavy equipment shall only be allowed down to 3 feet above the proposed bottom elevation. The remainder of excavation shall be done from the sides or above. Excavate infiltration trenches and basins to final grade only after all disturbed areas in the up gradient project drainage area have been permanently stabilized. The final phase of excavation should remove all accumulation of silt in the infiltration facility before putting it in service.
- Do not use infiltration facilities as temporary sediment traps during construction.
- Traffic Control – Relatively light-tracked equipment is required for this operation to avoid compaction of the basin floor. Consider the use of draglines and trackhoes for constructing infiltration basins. Flag or mark the infiltration area to keep heavy equipment away.

This page intentionally left blank

8. In addition to shade, trees and shrubs also discourage waterfowl use and the attendant phosphorus enrichment problems they cause. Setback trees so the branches will not extend over the pond.

9. Drought tolerant and native species are recommended, where feasible.

10. Ensure that mature width of plants are taken into consideration near access roads, pedestrian walkways or manmade structures. To reduce safety and maintenance liabilities, mature branch width should not overhang these features.

Emergency Overflow Spillway

1. Ponds must have an emergency overflow spillway. For impoundments of 10 acre-feet or greater, the emergency overflow spillway must meet the state's dam safety requirements. For impoundments under 10 acre-feet, ponds must have an emergency overflow spillway that is sized to pass the 100-year developed peak flow in the event of total control structure failure (e.g., blockage of the control structure outlet pipe) or extreme inflows. Emergency overflow spillways are intended to control the location of pond overtopping and direct overflows back into the downstream conveyance system or other acceptable discharge point.

2. Provide emergency overflow spillways for ponds with constructed berms over 2 feet in height, or for ponds located on grades in excess of 5 percent. As an option for ponds with berms less than 2 feet in height and located at grades less than 5 percent, emergency overflow may be provided by an emergency overflow structure, such as a Type II manhole fitted with a birdcage as shown in Figure 6.8. The emergency overflow structure must be designed to pass the 100-year developed peak flow, with a minimum 6 inches of freeboard, directly to the downstream conveyance system or another acceptable discharge point. Where an emergency overflow spillway would discharge to a slope steeper than 15%, consideration should be given to providing an emergency overflow structure in addition to the spillway.

3. Armor the emergency overflow spillway with riprap in conformance with BMP C209: Outlet Protection, see Book 2, Chapter 8. The spillway must be armored full width, beginning at a point midway across the berm embankment and extending downstream to where emergency overflows re-enter the conveyance system.

4. Emergency overflow spillway designs must be analyzed as broad-crested trapezoidal weirs as described in the following section. Either one of the weir sections shown in Figure 6.7 may be used.

5. Spillways shall not be blocked by features such as fences that may trap leaves and other floating debris.

6. A minimum of six-inches of freeboard shall be provided above the 100-year water surface elevation.

6. Tanks must comply with the OSHA confined space requirements, which include clearly marking entrances to confined space areas. This may be accomplished by hanging a removable sign in the access riser(s), just under the access lid.

Access Roads

Access roads are needed to all detention tank control structures and risers. Design and construct access roads as specified for detention ponds.

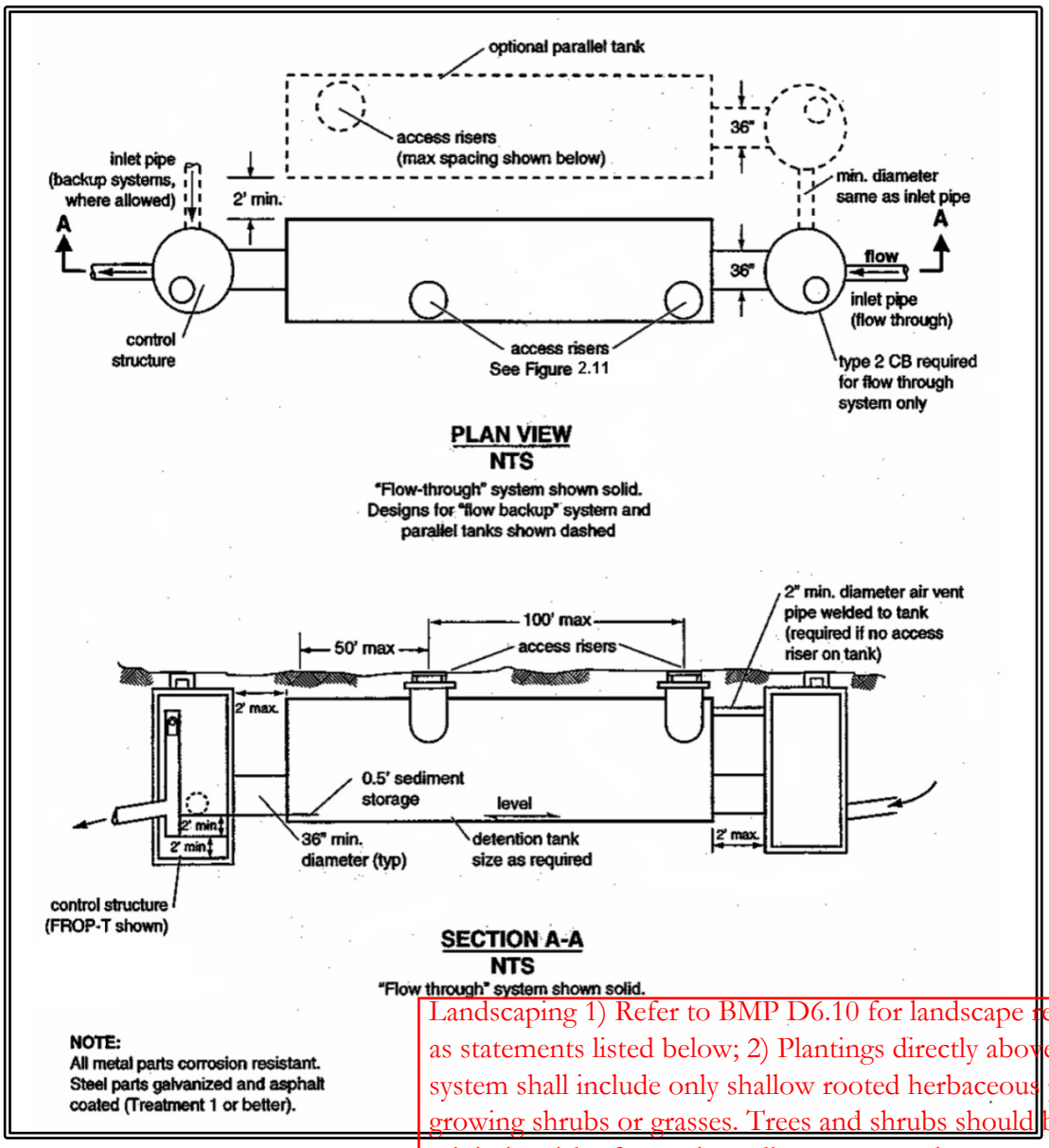

Figure 6.10: Typical Detention Tank

(Source: SMMWW)

Landscaping 1) Refer to BMP D6.10 for landscape requirements, as well as statements listed below; 2) Plantings directly above the detention tank system shall include only shallow rooted herbaceous perennials, low growing shrubs or grasses. Trees and shrubs should be avoided to minimize risk of roots impeding storage volume capacity and structural integrity of the underground system. Plantings should not include varieties that are water seeking such as sedges or rushes; and, 3) Avoid any plantings around the perimeter of the detention tank that will cause root encroachment into the tank storage system. Large trees should be planted a minimum of 10' from the edge of the detention tank system.

- The Wetland Geometry criteria for stormwater wetlands (see BMP T10.30) are modified as follows:
    - The minimum sediment storage depth in the presettling basin is 1 foot. The 6 inches of sediment storage required for detention ponds does not need to be added to this, nor does the 6 inches of sediment storage in the second cell of detention ponds need to be added.

Intent: Since emergent plants are limited to shallower water depths, the deeper water created before sediments accumulate is considered detrimental to robust emergent growth. Therefore, sediment storage is confined to the presettling basin which functions as a presettling cell.

The Inlet and Outlet criteria for wetponds shall apply with the following modifications:

- A sump must be provided in the outlet structure of combined facilities.
- The detention flow restrictor and its outlet pipe shall be designed according to the requirements for detention ponds (see Section 6.1.~~7~~4).
- The Planting Requirements for stormwater wetlands are modified to use the following plants which are better adapted to water level fluctuations:
    - *Scirpus acutus* (hardstem bulrush) 2 - 6' depth
    - *Scirpus microcarpus* (small-fruited bulrush) 1 - 2.5' depth
    - *Sparganium emersum* (burreed) 1 - 2' depth
    - *Sparganium eurycarpum* (burreed) 1 - 2' depth
    - *Veronica scutellata*. (marsh speedwell) 0 - 1' depth

In addition, the shrub *Spirea douglasii* (Douglas spirea) may be used in combined facilities.

Water Level Fluctuation Restrictions: The difference between the WQ design water surface and the maximum water surface associated with the 2-year runoff shall not be greater than 3 feet. If this restriction cannot be met, the size of the stormwater wetland must be increased. The additional area may be placed in the presettling basin, second cell, or both. If placed in the second cell, the additional area need not be planted with wetland vegetation or counted in calculating the average depth.

Intent: This criterion is designed to dampen the most extreme water level fluctuations expected in combined facilities to better ensure that fluctuation-tolerant wetland plants will be able to survive in the facility. It is not intended to protect native wetland plant communities and is not to be applied to natural wetlands.

7.1 Introduction

7.1.1 Purpose and Applicability

This chapter presents design requirements for open channel and closed conduit stormwater conveyance systems.

Open channel conveyance systems are preferred over closed conduits where feasible, especially where they might provide opportunities for water quality treatment, habitat improvement, or emergency overland flood relief routes.

All new development and redevelopment projects in Clark County are subject to the requirements of this chapter.

7.1.2 How to use this Chapter

This chapter includes:

- Section 7.2: Design and Construction Standards
- Section 7.3: Design Storm Frequency
- Section 7.4: Hydraulic Methods
- Section 7.5: Drainage of Highway Pavements
- Section 7.6: Drainage System Outfall Requirements

7.2 Design and Construction Standards

The following design standards shall be followed:

- Culverts shall be designed in accordance with the most recent version of the Washington State Department of Transportation *Hydraulics Manual*.
- Fish passage culverts shall meet the design criteria specified in *Water Crossing Design Guidelines* (WDFW, 2013).
- All pipe materials, joints, manholes, and other products associated with conveyance systems shall be designed and constructed in accordance with the 2014 edition of Washington State Department of Transportation *Standard Specifications for Road, Bridge, and Municipal Construction* (WSDOT, 2014).
- No new development, redevelopment, or drainage project shall be allowed to materially increase or concentrate stormwater runoff onto an adjacent property or block existing drainage from adjacent lots.

For computational standards, see Chapter 1.

BMP C209: Outlet Protection

Purpose and Description

Outlet protection prevents scour at conveyance outlets and minimizes the potential for downstream erosion by reducing the velocity of concentrated stormwater flows.

Conditions of Use

Outlet protection is required at the outlets of all ponds, pipes, ditches, or other conveyances, and where runoff is conveyed to a natural or manmade drainage feature such as a stream, wetland, lake, or ditch.

Design Criteria

- New pipe outfalls can provide an opportunity for low-cost fish habitat improvements. For example, an alcove of low-velocity water can be created by constructing the pipe outfall and associated energy dissipater back from the stream edge and digging a channel, over-widened to the upstream side, from the outfall. Overwintering juvenile and migrating adult salmonids may use the alcove as shelter during high flows. Bank stabilization, bioengineering, and habitat features may be required for disturbed areas. This work may require a HPA. See section 7.~~6~~7 for more information on outfall system design.
- The receiving channel at the outlet of a culvert shall be protected from erosion by rock lining a minimum of 6 feet downstream and extending up the channel sides a minimum of 1–foot above the maximum tailwater elevation or 1-foot above the crown, whichever is higher. For pipes greater than 18 inches in diameter, install outlet protection lining in the channel to four times the diameter of the culvert.
- Standard wingwalls, and tapered outlets and paved channels should also be considered when appropriate for permanent culvert outlet protection. (See WSDOT Hydraulic Manual).
- Organic or synthetic erosion blankets, with or without vegetation, are usually more effective than rock, cheaper, and easier to install. Materials can be chosen using manufacturer product specifications. ASTM test results are available for most products and the designer can choose the correct material for the expected flow.
- With low flows, vegetation (including sod) can be effective.
- The following guidelines shall be used for riprap outlet protection:
    - If the discharge velocity at the outlet is less than 5 fps (pipe slope less than 1 percent), use 2-inch to 8-inch riprap. Minimum thickness is 1-foot.
    - For 5 to 10 fps discharge velocity at the outlet (pipe slope less than 3 percent), use 24-inch to 48-inch riprap. Minimum thickness is 2 feet.

- 50% till landscaped area; 50% impervious area

C.4.2 Option 2 Design Criteria

- $\geq$ 8 inches of soil/media

Runoff Model Representation

- 50% till pasture; 50% impervious area

C.5 Rainwater Harvesting

Do not enter drainage area into the runoff model.

Note: This applies only to drainage areas for which a monthly water balance indicates no overflow of the storage capacity.

C.6 Reverse Slope Sidewalks

- Enter sidewalk area as landscaped area over the underlying soil type.
- Alternatively, use the "lateral flow" icons. Use the "Lateral Flow Impervious Area" icon for the sidewalk, and use the "Lateral Flow Basin" icon for the downgradient vegetated area.

C.7 Minimal Excavation Foundations

- Where residential roof runoff is dispersed on the upgradient side of a structure in accordance with the design criteria and guidelines in BMP T5.10~~B~~C of ~~Volume III – Chapter 3,~~ Book 2, the tributary roof area may be modeled as pasture on the native soil.
- In "step forming," the building area is terraced in cuts of limited depth. This results in a series of level plateaus on which to erect the form boards. Where "step forming" is used on a slope, the square footage of roof that can be modeled as pasture must be reduced to account for lost soils. The following equation (suggested by Rick Gagliano of Pin Foundations, Inc.) can be used to reduce the roof area that can be modeled as pasture.

$$A_1 - \frac{dC(.5)}{dP} \times A_1 = A_2$$

A_1 = roof area draining to up gradient side of structure

dC = depth of cuts into the soil profile

dP = permeable depth of soil (The A horizon plus an additional few inches of the B horizon where roots permeate into ample pore space of soil).

A_2 = roof area that can be modeled as pasture on the native soil. The rest of the roof is modeled as impervious surface unless it is dispersed in accordance with the next bullet.

- If roof runoff is dispersed downgradient of the structure in accordance with the design criteria and guidelines in BMP T5.10C of Book ~~1~~2, AND there is at least 50 feet of vegetated flow path through native material or lawn/landscape area that meets the guidelines in BMP T5.13 of Book ~~1~~2, the tributary roof areas may be modeled as

Bioretention – BMP T5.14B

Use new bioretention element for each type: cell, swale, or planter box.

The equations used by the elements are intended to simulate the wetting and drying of soil as well as how the soils function once they are saturated. This group of LID elements uses the modified Green Ampt equation to compute the surface infiltration into the amended soil. The water then moves through the top amended soil layer at the computed rate, determined by Darcy's and Van Genuchten's equations. As the soil approaches field capacity (i.e., gravity head is greater than matric head), the model determines when water will begin to infiltrate into the second soil layer (lower layer). This occurs when the matric head is less than the gravity head in the first layer (top layer). The second layer is intended to prevent loss of the amended soil layer. As the second layer approaches field capacity, the water begins to move into the third layer – the gravel underlayer. For each layer, the user inputs the depth of the layer and the type of soil.

For the Ecology-recommended soil specifications for each layer in the design criteria for bioretention, the model will automatically assign pre-determined appropriate values for parameters that determine water movement through that soil. These include: wilting point, minimum hydraulic conductivity, maximum saturated hydraulic conductivity, and Van Genuchten number.

If a user opts to use soils that deviate from the recommended specifications, the default parameter values do not apply. The user will have to use the Gravel Trench element to represent the bioretention facility and follow the procedures identified for WWHM3 in Part 1 of this appendix.

For Bioretention with underlying perforated drain pipes that discharge to the surface, the only volume available for storage (and modeled as storage as explained herein) is the void space within the aggregate bedding layer below the invert of the drain pipe. Use 40% void space for the Type 26 mineral aggregate specified in BMP T5.14B in Book 2.

Using the procedures explained in Book 1, Section 2.~~2.1.~~3 and the test methods described in Book 1, Section ~~4.3.1.3~~2.3.1.4, estimate the initial measured (a.k.a. short-term) infiltration rate of the native soils beneath the bioretention soil and any base materials. Because these soils are protected from fouling, not correction factor will be applied.

Permeable Pavements – BMP T5.15

Use new porous pavement element.

User specifies pavement thickness & porosity, aggregate base material thickness & porosity, maximum allowed ponding depth & infiltration rate into native soil. For grades greater than 2%, see additional guidance.

Vegetated Roofs – BMP T5.17

Use new green roof element

User specifies media thickness, vegetation type, roof slope, and length of drainage.

Impervious Reverse Slope Sidewalks – BMP T5.18

Use the lateral flow elements to send the impervious area runoff onto the lawn/landscape area that will be used for dispersion.

Ecology may develop guidance for representing multiple impervious reverse slope sidewalks in a project site. If such guidance is not forthcoming, in situations where multiple impervious reverse slop sidewalks will occur, Ecology may allow the impervious area to be modeled as a landscaped area so that the project schematic in WWHM becomes manageable.

Minimal Excavation Foundations – BMP T5.19

- Where residential roof runoff is dispersed on the up gradient side of a structure in accordance with the design criteria and guidelines in BMP T5.10~~B~~C, the tributary roof area may be modeled as pasture on the native soil.
- In "step forming," the building area is terraced in cuts of limited depth. This results in a series of level plateaus on which to erect the form boards. Where "step forming" is used on a slope, the square footage of roof that can be modeled as pasture must be reduced to account for lost soils. The following equation (suggested by Rick Gagliano of Pin Foundations, Inc.) can be used to reduce the roof area that can be modeled as pasture.

$$A_1 - \frac{dC(.5)}{dP} \times A_1 = A_2$$

A_1 = roof area draining to up gradient side of structure

dC = depth of cuts into the soil profile

dP = permeable depth of soil (The A horizon plus an additional few inches of the B horizon where roots permeate into ample pore space of soil).

A_2 = roof area that can be modeled as pasture on the native soil. The rest of the roof is modeled as impervious surface unless it is dispersed in accordance with the next bullet.

- If roof runoff is dispersed down gradient of the structure in accordance with the design criteria and guidelines in BMP T5.10C, AND there is at least 50 feet of vegetated flow path through native material or lawn/landscape area that meets the guidelines in BMP T5.13, the tributary roof areas should be modeled as a lateral flow impervious area. This is done in WWHM on the Mitigated Scenario screen by connecting the dispersed impervious area to the lawn/landscape lateral flow soil basin element representing the area that will be used for dispersion.

  Ecology may develop guidance for representing multiple downspout dispersions in a project site. If such guidance is not forthcoming, in situations where multiple downspout (down gradient) dispersions will occur, Ecology may allow the roof area to be modeled as a landscaped area so that the project schematic in WWHM becomes manageable.

Full dispersion – BMP T5.30

If BMP design criteria in Book 2 are followed, the area draining to the BMP is not entered into the runoff model.

Full downspout infiltration – BMP T5.10A and BMP T5.10B

If BMP design criteria in Book 2 are followed, the area draining to the BMP is not entered into the runoff model.

Rainwater Harvesting – BMP T5.20

If BMP design criteria in Book 2 are followed, the area draining to the BMP is not entered into the runoff model.

Newly planted trees – BMP T5.16

If BMP design criteria in Book 2 are followed, the total impervious/hard surface areas entered into the runoff model may be reduced by an amount indicated in the criteria for the BMP in Book 2.

Retained trees – BMP T5.16

If BMP design criteria in Book 2 are followed, the total impervious/hard surface areas entered into the runoff model may be reduced by an amount indicated in the criteria for the BMP in Book 2.

Perforated Stub-out Connection – BMP T5.10D

Any flow reduction is variable and unpredictable. No computer modeling techniques are allowed that would predict any reduction in flow rates and volumes from the connected area.

Approaches to Infiltration Facility Design

Three methods for obtaining a design coefficient of permeability (or infiltration rate), and for designing infiltration facilities are allowed: the ASCE approach, the Simplified Approach and the Detailed Approach. These are described below.

1. The ASCE approach is to be used when using the Modified Single-Ring Falling Head Test. See Appendix 1-~~D~~ C in Book 1.

2. The Simplified Approach can be used when field testing was performed using either PIT test method or the Soil Grain Size Analysis Method. This method was derived from high groundwater and shallow pond sites in western Washington, and in general will produce conservative designs. The Simplified Approach can be used when determining the trial geometry of the infiltration facility, or for small facilities serving short plats or commercial developments with less than 1 acre of contributing area.

3. The Detailed Approach can be used when field testing was performed using either PIT test method or the Soil Grain Size Analysis Method. Designs of infiltration facilities for projects larger than one acre that used either PIT test or the Soil Grain Size method for obtaining the field-measured coefficient of permeability must use the Detailed Approach.

Simplified Approach

The simplified approach is applicable to drywells, ponds, and trenches and includes five steps.

Step 1: Select a Location and Determine Site Suitability

Select a site and conduct a preliminary surface and Site Characterization Study per Book 1, Section 4.~~4~~3.1.2.

Review the following site suitability criteria. When a site investigation reveals that any of the following criteria cannot be met, consider appropriate measures such as relocation or resizing so that the infiltration facility will not pose a threat to safety, health, and the environment and meet the requirements in this section.

- Setback Criteria as described in Book 1, Section 4.4, Table 4.1.
- Critical Aquifer Recharge Areas (CARA). Review Book 1, Section 4.~~2.2~~ 3.1.1 and CCC 40.410 for regulation regarding installation of infiltration facilities within CARA sites.
- High Vehicle Traffic Areas. An infiltration BMP can be used in areas of industrial activity and the high vehicle traffic areas described below. For such applications, provide sufficient pollutant removal (including oil removal) upstream of the infiltration facility to ensure that groundwater quality standards will not be violated and that the infiltration facility will not be adversely affected.

High Vehicle Traffic Areas are:

- Commercial or industrial sites subject to an expected average daily traffic count (ADT) ≥100 vehicles/1,000 ft² gross building area (trip generation).
- Road intersections with an ADT of ≥ 25,000 on the main roadway and ≥ 15,000 on any intersecting roadway.

Step 2: Estimate Volume of Stormwater, Vdesign

Estimate the volume of stormwater by using a continuous hydrograph and an approved continuous flow model for the calculations. The runoff file developed for the project site serves as input to the infiltration facility.

- For infiltration facilities sized to meet treatment requirements, the basin must successfully infiltrate 91% of the influent runoff file. The remaining 9% of the influent file can bypass the infiltration facility.
- For infiltration basins sized to meet the flow control standard, the basin must infiltrate either all of the influent file, or a sufficient amount of the influent file such that any overflow/bypass meets the flow duration standard. In addition, the overflow/bypass must meet the LID Performance Standard, if applicable according to thresholds in Minimum Requirement #5, Section 1.5.5.

Step 3: Develop Trial Infiltration Facility Geometry

To develop the trial facility geometry assume an infiltration rate based on previously available data, or a default infiltration rate of 0.5 inches/hour. Use this trial facility geometry to help locate the facility and for planning purposes in developing the geotechnical subsurface investigation plan.

Step 4: Determine the Design Infiltration Rate

Estimate the design (long-term) infiltration rate as follows:

- Use an allowed method listed in Section 4.~~5.2~~3.1.3 to field-measure the coefficient of permeability.
- Adjust this rate using the appropriate correction factors, as explained in Section 4.~~5.4~~3.1.3.

Clark County Stormwater Manual 2015

Book 3
Source Control

November 24, 2015

ERRATA v. strikeout/underline (September 2016)

- Do not connect floor drains in potential pollutant source areas to storm drains, surface water, or to the ground.

Recommended Additional Good Housekeeping BMPs

- Clean up pollutant liquid leaks and spills in impervious uncovered containment areas at the end of each working day.
- Use solid absorbents, e.g., clay and peat absorbents and rags for cleanup of liquid spills/leaks, where practicable.
- Promptly repair/replace/reseal damaged paved areas at industrial facilities.
- Recycle materials, such as oils, solvents, and wood waste, to the maximum extent practicable.

3. Preventive Maintenance

- Prevent the discharge of unpermitted liquid or solid wastes, process wastewater, and sewage to ground or surface water, or to storm drains that discharge to surface water, or to the ground. Conduct all oily parts cleaning, steam cleaning, or pressure washing of equipment or containers inside a building, or on an impervious contained area, such as a concrete pad. Direct contaminated stormwater from such an area to a sanitary sewer where allowed by local sewer authority, or to other approved treatment.
- Pressure wash impervious surfaces contaminated with oils, metals, sediment, etc. Collect the resulting washwater for proper disposal (usually involves plugging storm drains, or otherwise preventing discharge and pumping or vacuuming up washwater, for discharge to sanitary sewer or for vactor truck transport to a waste water treatment plant for disposal).

Figure 2.1: Collecting Washwater for Disposal

~~(Source: Clark County)~~
(Source: Fresh Look Mobil Power Wash)

- Do not pave over contaminated soil unless it has been determined that ground water has not been and will not be contaminated by the soil. Call Ecology for assistance.
- Construct impervious areas that are compatible with the materials handled. Portland cement concrete, asphalt, or equivalent material may be considered.
- Use drip pans to collect leaks and spills from industrial/ commercial equipment such as cranes at ship/boat building and repair facilities, log stackers, industrial parts, trucks and other vehicles stored outside.
- At industrial and commercial facilities, drain oil and fuel filters before disposal. Discard empty oil and fuel filters, oily rags, and other oily solid waste into appropriately closed and properly labeled containers, and in compliance with the Uniform Fire Code or International Building Code.
- For the storage of liquids use containers, such as steel and plastic drums, that are rigid and durable, corrosion resistant to the weather and fluid content, non-absorbent, water tight, rodent-proof, and equipped with a close fitting cover.
- For the temporary storage of solid wastes contaminated with liquids or other potential polluted materials use dumpsters, garbage cans, drums, and comparable containers, which are durable, corrosion resistant, non-absorbent, non-leaking, and equipped with either a solid cover or screen cover to prevent littering. If covered with a screen, the container must be stored under a roof or other form of adequate cover.
- Where exposed to stormwater, use containers, piping, tubing, pumps, fittings, and valves that are appropriate for their intended use and for the contained liquid.

Recommended Additional Preventive Maintenance BMPs

- Where feasible, store potential stormwater pollutant materials inside a building or under a cover and/or containment.
- Minimize use of toxic cleaning solvents, such as chlorinated solvents, and other toxic chemicals.
- Use environmentally safe raw materials, products, additives, etc. such as substitutes for zinc used in rubber production.
- Recycle waste materials such as solvents, coolants, oils, degreasers, and batteries to the maximum extent feasible. Refer to Appendix 3-C for recommendations on recycling or disposal of vehicle waste liquids and other waste materials.
- Empty drip pan immediately after a spill or a leak is collected in an uncovered area.
- Place metal medallions at stormwater catch basins and drains. See Book ~~2~~1, Figure ~~9.1~~1.5.

  Note: Evidence of stormwater contamination by oils and grease can include the presence of visible sheen, color, or turbidity in the runoff, or present or historical operational problems at the facility. Operators can use simple pH tests, for example with litmus or pH paper. These tests

can screen for high or low pH levels (anything outside a 6.5-8.5 range) due to contamination in stormwater.

- Place signage near potential discharge locations describing emergency response information such as spill kit instructions, shut-off valve instructions, and spill response contact information.

  Note: Signs for regulated Underground Storage Tank systems must meet requirements under Washington Administrative Code (WAC) 173-360.

4. Spill Prevention and Cleanup

According to Washington state law, all spills of hazardous material or oil must be reported immediately by the spiller. If you find a spill, but are not the spiller, you should also report it. Call the following THREE (3) numbers:

National Response Center: 800-424-8802 (24-hours)
– AND –
Washington Emergency Management Division: 800-258-5990 –OR– 800-OILS-911 (24-hours)
– AND –
Ecology Southwest Regional Office: 360-407-6300

- Stop, contain, and clean up all spills immediately upon discovery.
- If pollutant materials are stored on-site, have spill containment and cleanup kits readily accessible.
- If the spill has reached or may reach a sanitary or a storm sewer, ground water, or surface water notify Clark County, Ecology, and the local sewer authority immediately. Notification must comply with and federal spill reporting requirements. (See also record keeping at the end of this section and S406 BMPs for Spills of Oil and Hazardous Substances.)
- Do not flush or otherwise direct absorbent materials or other spill cleanup materials to a storm drain. Collect the contaminated absorbent material as a solid and place in appropriate disposal containers.

Figure 2.2: Spill Kit

(Source: ~~Clark County~~ Brady Worldwide)

Recommended Additional Spill Prevention and Cleanup BMP

- Place and maintain emergency spill containment and cleanup kit(s) at outside areas where there is a potential for fluid spills. These kits should be appropriate for the materials and the size of a potential spill. Locate spill kits within 25 feet of all

Required Structural Source Control BMPs

At All Loading/ Unloading Areas

- Consistent with Uniform Fire Code requirements (see the Related Regulations section of the Introduction to the Manual, Uniform Fire Code Requirements) and to the extent practicable, conduct unloading or loading of solids and liquids in a manufacturing building, under a roof, or lean-to, or other appropriate cover.
- Berm, dike, and/or slope the loading/unloading area to prevent run-on of stormwater and to prevent the runoff or loss of any spilled material from the area.
- Place curbs along the edge of the shoreline, or slope the edge such that the stormwater can flow to an internal storm sewer system that leads to an approved treatment BMP. Avoid draining directly to the surface water from loading areas.
- Pave and slope loading/unloading areas to prevent the pooling of water. Minimize the use of catch basins and drain lines within the interior of the paved area or place catch basins in designated "alleyways" that are not covered by material, containers, or equipment.
- Retain on-site the necessary materials for rapid cleanup of spills.

At Solid Waste Storage Areas for Waste/Recycling Containers and Trash Compactors

- Store containers and trash compactors in a designated area, which is covered, bermed or diked, paved and impervious in order to prevent rainfall and runoff from coming into contact with the waste materials. Slope the secondary containment to a drain into a dead-end sump for the collection of leaks and small spills. Direct drainage from the cover's downspouts away from the solid waste storage area.

Recommended Structural Source Control BMP

For the transfer of pollutant liquids in areas that cannot contain a catastrophic spill, install an automatic shutoff system in case of unanticipated off-loading interruption (e.g. coupling break, hose rupture, overfill, etc.).

At Loading and Unloading Docks

- Install/maintain overhangs, or door skirts that enclose the trailer end (see Figures 2.~~6~~7 and 2.~~6~~8) to prevent contact with rainwater.
- Design the loading/unloading area with berms, sloping, etc. to prevent the run-on of stormwater.

This page intentionally left blank.

~~This page intentionally left blank.~~

S419 BMPs for Mobile Fueling of Vehicles and Heavy Equipment

Description of Pollutant Sources: Mobile fueling, also known as fleet fueling, wet fueling, or wet hosing, is the practice of filling fuel tanks of vehicles by tank trucks that are driven to the yards or sites where the vehicles to be fueled are located. Regulators categorize diesel fuel as a Class II Combustible Liquid, whereas they categorize gasoline as a Flammable Liquid.

Historically organizations conducted mobile fueling for off-road vehicles operated for extended periods in remote areas. This includes construction sites, logging operations, and farms. Some organizations conduct mobile fueling of on-road vehicles commercially in the State of Washington.

Note that some local fire departments may have restrictions on mobile fueling practices.

Pollutant Control Approach: Operators typically need proper training of the fueling operators, and the use of spill/drip control and reliable fuel transfer equipment with backup shutoff valving.

Required Operational BMPs

Organizations and individuals conducting mobile fueling operations must implement the bulleted BMPs below. The operating procedures for the driver/operator should be simple, clear, effective, and they should be verified by the organization liable for environmental and third party damage.

- Ensure that the local fire department approves all mobile fueling operations. Comply with local and Washington State fire codes.
- In fueling locations that are in close proximity to sensitive aquifers, designated wetlands, wetland buffers, or other waters of the State, approval by Clark County is necessary to ensure compliance with additional local requirements.
- Ensure compliance with all Title 49 CFR 178 requirements for DOT 406 cargo tanker. Documentation from a Department of Transportation (DOT) Registered Inspector provides proof of compliance.
- Ensure the presence and the constant observation/monitoring of the driver/operator at the fuel transfer location at all times during fuel transfer and ensure implementation of the following procedures at the fuel transfer locations:
    - Locate the point of fueling at least 25 feet from the nearest storm sewer or inside an impervious containment with a volumetric holding capacity equal to or greater than 110 percent of the fueling tank volume, or cover~~ing~~ the storm sewer to ensure no inflow of spilled or leaked fuel. Covers are not required for storm sewers that convey the inflow to a spill control separator approved by Clark County. Potential spill/leak conveyance surfaces must be impervious and in good repair.

ERRATA September 2016

S426 BMPs for Spills of Oil and Hazardous Substances

Description of Pollutant Sources: Federal law requires owners or operators of facilities engaged in drilling, producing, gathering, storing, processing, transferring, distributing, refining, or consuming oil and/or oil products to have a Spill Prevention and Emergency Cleanup Plan (SPECP). The SPECP is required if the above ground storage capacity of the facility is 1,320 gallons or more of oil. Additionally, the SPECP is required if any single container with a capacity in excess of 660 gallons and which, due to their location, could reasonably be expected to discharge oil in harmful quantities, as defined in 40 CFR Part 110, into or upon the navigable waters of the United States or adjoining shorelines {40 CFR 112.1 (b)}. Onshore and offshore facilities, which, due to their location, could not reasonably be expected to discharge oil into or upon the navigable waters of the United States or adjoining shorelines are exempt from these regulations {40 CFR 112.1(1)(i)}. State Law requires owners of businesses that produce dangerous wastes to have a SPECP. These businesses should refer to Washington State/Federal Emergency Spill Cleanup Requirements described in the Related State and Federal Regulations section of the Introduction to the Manual. The federal definition of oil is oil of any kind or any form, including, but not limited to petroleum, fuel oil, sludge, oil refuse, and oil mixed with wastes other than dredged spoil.

Pollutant Control Approach: Maintain, update, and implement a SPECP.

Required Operational BMPs

The businesses and public agencies identified in Appendix 3-A are required to prepare and implement a SPECP shall implement the following:

- Prepare a SPECP that includes:
    - A description of the facility including the owner's name and address.
    - The nature of the activity at the facility.
    - The general types of chemicals used or stored at the facility.
    - A site plan showing the location of storage areas for chemicals, the locations of storm drains, the areas draining to them, and the location and description of any devices to stop spills from leaving the site such as positive control valves.
    - Cleanup procedures.

Figure 2.11: Spill Kit

(Source: ~~Clark County~~ Brady Worldwide)

A.4 Service Businesses

Animal Care Services
SIC: 0740, 0750

Description: This group includes racetracks, kennels, fenced pens, veterinarians and businesses that provide boarding services for animals including horses, dogs, and cats.

Potential Pollutant Generating Sources: The primary sources of pollution include animal manure, washwaters, waste products from animal treatment, runoff from pastures where larger livestock are allowed to roam, and vehicle maintenance and repair shops. Pastures may border streams and direct access to the stream may occur. Both surface water and ground water may be contaminated. Potential stormwater contaminants include fecal coliform, oil and grease, suspended solids, BOD, and nutrients.

Commercial Car and Truck Washes
SIC: 7542

Description: Facilities include automatic systems found at individual businesses or at gas stations and 24-hour convenience stores, as well as self-service. There are three main types: tunnels, rollovers and hand-held wands. The tunnel wash, the largest, is housed in a long building through which the vehicle is pulled. At a rollover wash the vehicle remains stationary while the equipment passes over. Wands are used at self-serve car washes. Some car washing businesses also sell gasoline.

Potential Pollutant Generating Sources: Wash wastewater may contain detergents and waxes. Wastewater should be discharged to sanitary sewers. In self-service operations a drain is located inside each car bay. Although these businesses discharge the wastewater to the sanitary sewer, some washwater can find its way to the storm drain, particularly with the rollover and wand systems. Rollover systems often do not have air-drying. Consequently, as it leaves the enclosure the car sheds water to the pavement. With the self-service system, washwater with detergents can spray outside the building and drain to storm sewer. Users of self-serve operations may also clean engines and change oil, dumping the used oil into the storm drain. Potential pollutants include oil and grease, detergents, soaps, BOD, and TSS.

Equipment Repair
SIC: 7353, 7600

Description: This group includes several businesses that specialize in repairing different equipment including communications equipment, radio, TV, household appliances, and refrigeration systems. Also included are

Recommendations for Management of Street Wastes

Introduction

This appendix addresses waste generated from stormwater maintenance activities such as street sweeping and the cleaning of catch basins, and to a limited extent, other stormwater conveyance and treatment facilities. Limited information is available on the characteristics of wastes from detention/retention ponds, bioswales, and similar stormwater treatment facilities. The recommendations provided here may be generally applicable to these facilities, with extra diligence given to waste characterization.

These recommendations do not constitute rules or regulations, but are suggestions for street waste handling, reuse, and disposal using current regulations and the present state of knowledge of street waste constituents. The recommendations address the liquid and solid wastes collected during routine maintenance of stormwater catch basins, detention/retention ponds, ditches and similar storm water treatment and conveyance structures, and street and parking lot sweeping. In addition to these recommendations, end users and other authorities may have their own requirements for street waste reuse and handling.

"Street Wastes" include liquid and solid wastes collected during maintenance of stormwater catch basins, detention/retention ponds, ditches and similar storm water treatment and conveyance structures, and solid wastes collected during street and parking lot sweeping.

"Street Wastes," as defined here, does not include solids and liquids from street washing using detergents, cleaning of electrical vaults, vehicle wash sediment traps, restaurant grease traps, industrial process waste, sanitary sewage, mixed process, or combined sewage/stormwater wastes. Wastes from oil/water separators at sites that load fuel are not included as street waste. Street waste also does not include flood debris, land-slide debris, and chip seal gravel.

Street waste does not ordinarily classify as dangerous waste. The owner of the storm water facility and/or collector of street waste is considered the waste generator and is responsible for determining whether the waste designates as dangerous waste. Sampling to date has shown that material from routine maintenance of streets and stormwater facilities does not classify as dangerous waste (See Table ~~G~~E.6 below). However, it is possible that street waste from spill sites could classify as dangerous

Clark County Stormwater Manual 2015

Book 4
Stormwater Facility
Operations and Maintenance

November 24, 2015
ERRATA v. strikeout/underline (September 2016)

Field Inlet

A field inlet is a concrete structure fitted with a slotted grate to collect stormwater runoff and route it through underground pipes.

Field inlets typically provide a storage volume (sump) below the outlet pipe to allow sediments and debris to settle out of the stormwater runoff. Some field inlets are fitted with a spill control device (inverted elbow on outlet pipe) intended to contain large quantities of grease or oils.

Facility objects that are typically associated with a field inlet include:

- access road or easement
- control structure/flow restrictor
- biofiltration swale
- detention pond
- infiltration trench

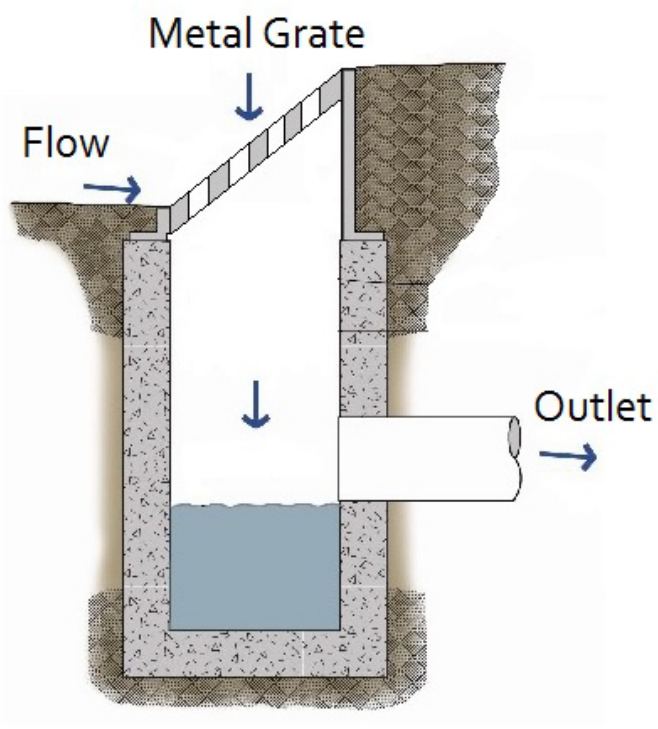

Key Operations and Maintenance Considerations

- The most common tool for cleaning field inlets is a truck with a tank and vacuum hose (Vactor® truck) to remove sediment and debris from the sump.

Detention Pond			
Drainage System Feature	Potential Defect	Conditions When Maintenance Is Needed	Minimum Performance Standard
			Note: table spans multiple pages.
General	Trash and Debris	Any trash and debris which exceed 1 cubic foot per 1,000 square feet. In general, there should be no visual evidence of dumping. If less than threshold all trash and debris will be removed as part of next scheduled maintenance.	Site is free of trash and debris.
	Poisonous Plants and Noxious Weeds	Any poisonous plants or nuisance vegetation which may constitute a hazard to maintenance personnel or the public. Any evidence of noxious weeds as defined by State or local regulations. (Coordinate with Clark County Environmental Services Department, Vegetation Management Program.)	No danger of poisonous vegetation where maintenance personnel or the public might normally be. Eradication of Class A weeds as required by State law. Control of Class B weeds designated by Clark County Weed Board. Control of other listed weeds as directed by local policies. Apply requirements of adopted IPM policy for the use of herbicides.
	~~Tree~~ Growth and Hazard Trees Vegetation	~~Tree~~ growth does not allow maintenance access or interferes with maintenance activity (i.e., slope mowing, silt removal, vaccuming, or equipment movements). If trees are not interfering with access or maintenance, do not remove. Dead, diseased, or dying trees are identified. (Use a certified Arborist to determine health of tree or removal requirements.)	~~Trees~~ do not hinder maintenance activities. Harvested ~~trees~~ should be recycled into mulch or other beneficial uses (e.g., alders for firewood). Vegetation Remove hazard trees.
	Contaminants and Pollution	Any evidence of oil, gasoline, contaminants or other pollutants. (Coordinate removal/cleanup with local water quality response agency.)	No contaminants or pollutants present.
	Rodent Holes	Any evidence of rodent holes if facility is acting as a dam or berm, or any evidence of water piping through dam or berm via rodent holes.	Rodents destroyed and dam or berm repaired. (Coordinate with Clark County Maintenance and Operations department; coordinate with Ecology Dam Safety Office if pond exceeds 10 acre-feet.)
	Beaver Dams	Dam results in change or function of the facility.	Facility is returned to design function. (Coordinate trapping of beavers and removal of dams with appropriate permitting agencies.)

Key Operations and Maintenance Considerations

- The most common tool for cleaning closed detention systems is a truck with a tank and vacuum hose (Vactor® truck) to remove sediment and debris from the vault/tank.
- A closed detention system is an enclosed space where harmful chemicals and vapors can accumulate. Therefore, if the inspection and maintenance requires entering a closed detention system, it should be conducted by an individual trained and certified to work in hazardous confined spaces.

Closed Detention System (Tanks/Vaults)			
Drainage System Feature	Potential Defect	Conditions When Maintenance Is Needed	Minimum Performance Standard
			Note: table spans multiple pages
Storage Area	Plugged Air Vents	One-half of the cross section of a vent is blocked at any point or the vent is damaged.	Vents open and functioning.
	Debris and Sediment	Accumulated sediment depth exceeds 10% of the diameter of the storage area for 1/2 length of storage vault or any point depth exceeds 15% of diameter. (Example: 72-inch storage tank would require cleaning when sediment reaches depth of 7 inches for more than 1/2 length of tank.)	Storage area free of sediment and debris.
	Joints Between Tank/Pipe Section	Any openings or voids allowing material to be transported into facility. (Will require engineering analysis to determine structural stability.)	All joint between tank/pipe sections are sealed.
	Tank Pipe Bent Out of Shape	Any part of tank/pipe is bent out of shape more than 10% of its design shape. (Review required by engineer to determine structural stability.)	Tank/pipe repaired or replaced to design.
	Vault Structure Includes Cracks in Wall, Bottom, Damage to Frame and/or Top Slab	Cracks wider than 1/2-inch and any evidence of soil particles entering the structure through the cracks, or maintenance/inspection personnel determines that the vault is not structurally sound.	Vault replaced or repaired to design specifications and is structurally sound.
		Cracks wider than 1/2-inch at the joint of any inlet/outlet pipe or any evidence of soil particles entering the vault through the walls.	No cracks more than 1/4-inch wide at the joint of the inlet/outlet pipe.
	*NOTE - add one additional defect for "Storage Area" (see next page)		
Manhole	Cover Not in Place	Cover is missing or only partially in place. Any open manhole requires maintenance.	Manhole is closed.
	Locking Mechanism Not	Mechanism cannot be opened by one maintenance person with proper tools. Bolts into frame have less than 1/2 inch of	Mechanism opens with proper tools.

Closed Detention System (Tanks/Vaults)			
Drainage System Feature	Potential Defect	Conditions When Maintenance Is Needed	Minimum Performance Standard
			Note: table spans multiple pages
	Working	thread (may not apply to self-locking lids).	
	Cover Difficult to Remove	One maintenance person cannot remove lid after applying normal lifting pressure. Intent is to keep cover from sealing off access to maintenance.	Cover can be removed and reinstalled by one maintenance person.
	Ladder Rungs Unsafe	Ladder is unsafe due to missing rungs, misalignment, not securely attached to structure wall, rust, or cracks.	Ladder meets design specifications. Allows maintenance person safe access.
Catch Basins	**See "Catch Basins"**		

*Add the following line for "Storage Area" defect on page 73:

Vegetation Encroachment	Root encroachment of tree or shrub have impacted function or integrity of wetvault.	Roots are found in vault to be removed and repair vault.

Wet Vault			
Drainage System Feature	Potential Defect	Conditions When Maintenance Is Needed	Minimum Performance Standard
General	Trash/Debris Accumulation	Trash and debris accumulated in vault, pipe or inlet/outlet (includes floatables and non-floatables).	Vault is free of trash and debris.
	Sediment Accumulation in Vault	Sediment accumulation in vault bottom exceeds the depth of the sediment zone plus 6-inches.	Vault is free of sediment.
	Damaged Pipes	Inlet/outlet piping damaged or broken and in need of repair.	Pipe has been repaired and/or replaced to design specifications.
	Access Cover Damaged/Not Working	Cover cannot be opened or removed, especially by one person.	Cover repaired or replaced to design specifications.
	Blocked Ventilation	Ventilation area blocked or plugged.	Blocking material has been cleared from ventilation area and removed. A specified % of the vault surface area must provide ventilation to the vault interior (see design specifications).
	Damage - Includes Cracks in Walls Bottom, Damage to Frame and/or Top Slab	Maintenance/inspection personnel determine that the vault is not structurally sound.	Vault replaced or repairs made such that vault meets design specifications and is structurally sound.
		Cracks wider than 1/2 inch at the joint of any inlet/outlet pipe or evidence of soil particles entering through the cracks.	Vault repaired so that no cracks exist wider than 1/4-inch at the joint of the inlet/outlet pipe.
	Baffles *NOTE - Add a row for additional maintenance requirement.	Baffles corroding, cracking, warping and/or showing signs of failure as determined by maintenance/inspection staff.	Baffles repaired or replaced to design specifications.
Ladder	Access Ladder Damage	Ladder is corroded or deteriorated, not functioning properly, not attached to structure wall, missing rungs, has cracks and/or misaligned. Confined space warning sign missing.	Ladder replaced or repaired to design specifications, and is safe to use as determined by inspection personnel. Confined space entry warning and requirements sign is present, clean and legible. Ladder and entry notification complies with OSHA standards.

*Add the following line for "Storage Area" defect on page 73:

Vegetation Encroachment	Root encroachment of tree or shrub have impacted function or integrity of wetvault.	Roots are found in vault to be removed and repair vault.

- Access and maintenance requirements and methods vary by type of system; some maintenance activities may be accomplished without human entry into the system. Check the manufacturer's publications and the site's maintenance plan for details.

Modular Detention Systems			
Drainage System Feature	Potential Defect	Conditions When Maintenance Is Needed	Minimum Performance Standard
Storage Area	Plugged Air Vents	One-half of the cross section of a vent is blocked at any point or the vent is damaged.	Vents open and functioning.
	Debris and Sediment	Accumulated sediment depth exceeds 10% of the depth of the storage area for 1/2 length of storage area or any point depth exceeds 15% of depth. (Example: 72-inch deep storage area would require cleaning when sediment reaches depth of 7 inches for more than 1/2 length of storage area.)	Storage area free of sediment and debris.
	Leaks in Joints Between Storage/ Vault/ Pipe Section	Any openings or voids allowing material to be transported into facility. (Will require engineering analysis to determine structural stability.)	All joints between tank/pipe sections are sealed.
	Tears, Cracks or Leaks in Storage Area Structure	Cracks wider than 1/2 inch and any evidence of soil particles entering the storage area through cracks or tears in top, bottom or walls, or maintenance/inspection personnel determines that the storage area is not structurally sound.	Storage area replaced or repaired to design specifications and is structurally sound. No further evidence of soil particles entering through cracks/tears in enclosure.
	Poor Water Quality	Inspection of discharge water for obvious signs of poor water quality (i.e. obvious oil or other contaminants present).	Effluent discharge from vault clear, without thick visible sheen.
	Other Defects Listed in Manufacturer Specifications or Maintenance Literature	Other damage or defects that prevent the system from functioning to design specifications.	Defects repaired/ corrected per manufacturer's documentation and/ or design specifications.
	*NOTE - Add a row for additional maintenance requirement.		
Manhole (if present)		**See "Manhole"**	

*Add the following line for "Storage Area" defect on page 73:

Vegetation Encroachment	Root encroachment of tree or shrub have impacted function or integrity of wetvault.	Roots are found in vault to be removed and repair vault.