Clark County Stormwater Manual

Book 3
Source Control

Final Draft
June 30, 2014

Clark County Stormwater Manual
Book 3 – Source Control
Final Draft
June 30, 2014

Chapter 1 Introduction 1
1.1 Purpose of this Book 1
1.2 Content and Organization of this Book 1
1.3 How to Use this Book 1
1.4 Operational and Structural Source Control BMPs 2
1.5 Treatment BMPs for Specific Pollutant Sources 3
1.6 Distinction between Required BMPs and Recommended BMPs 3
1.7 Regulatory Requirements Affecting Stormwater Pollutant Control 4

Chapter 2 Selection of Operational and Structural Source Control BMPs 5
2.1 Required (Mandatory) Operational Source Control BMPs 6
2.2 Pollutant Source-Specific BMPs 11
S401 BMPs for the Building, Repair, and Maintenance of Boats and Ships 11
S402 BMPs for Commercial Animal Handling Areas 13
S403 BMPs for Commercial Composting 14
S404 BMPs for Commercial Printing Operations 16
S405 BMPs for Deicing and Anti-Icing Operations - Airports and Streets 17
S406 BMPs for Streets/ Highways 18
S407 BMPs for Dust Control at Disturbed Land Areas and Unpaved Roadways and Parking Lots 19
S408 BMPs for Dust Control at Manufacturing Areas 20
S409 BMPs for Fueling At Dedicated Stations 21
S410 BMPs for Illicit Connections to Storm Drains 23
S411 BMPs for Landscaping and Lawn / Vegetation Management 24
S412 BMPs for Loading and Unloading Areas for Liquid or Solid Material 30
S413 BMPs for Log Sorting and Handling 34
S414 BMPs for Maintenance and Repair of Vehicles and Equipment 35
S415 BMPs for Maintenance of Public and Private Utility Corridors and Facilities 37
S416 BMPs for Maintenance of Roadside Ditches 39

Final Draft to ECY

S417 BMPs for Maintenance of Stormwater Drainage and Treatment Systems 40
S418 BMPs for Manufacturing Activities - Outside 41
S419 BMPs for Mobile Fueling of Vehicles and Heavy Equipment 43
S420 BMPs for Painting/ Finishing /Coating of Vehicles/Boats/ Buildings/ Equipment 45
S421 BMPs for Parking and Storage of Vehicles and Equipment 46
S422 BMPs for Railroad Yards 47
S423 BMPs for Recyclers and Scrap Yards 48
S424 BMPs for Roof/ Building Drains at Manufacturing and Commercial Buildings 49
S425 BMPs for Soil Erosion and Sediment Control at Industrial Sites 50
S426 BMPs for Spills of Oil and Hazardous Substances 51
S427 BMPs for Storage of Liquid, Food Waste, or Dangerous Waste Containers 52
S428 BMPs for Storage of Liquids in Permanent Aboveground Tanks 56
S429 BMPs for Storage or Transfer (Outside) of Solid Raw Materials, Byproducts, or Finished Products 58
S430 BMPs for Urban Streets 60
S431 BMPs for Washing and Steam Cleaning Vehicles/ Equipment/ Building Structures 62
S432 BMPs for Wood Treatment Areas 64
S433 BMPs for Pools, Spas, Hot Tubs, and Fountains 66

Chapter 3 BMPs for Residential Properties 69

Automobile Washing (for Single-Family Residences) 69
Automobile Maintenance 70
Household Hazardous Material Use, Storage, and Disposal 71
Yard Maintenance and Gardening 72
Pet Waste 72
Swimming Pool and Spa Cleaning and Maintenance 73
General Home Maintenance 73

Book 3 References 75

Final Draft to ECY

Appendices

Appendix 3-A Urban Land Uses and Pollutant Generating Sources
Appendix 3-B Stormwater Pollutants and Their Adverse Impact
Appendix 3-C Recycling/Disposal of Vehicle Fluids/Other Wastes
Appendix 3-D NPDES Stormwater Discharge Permits
Appendix 3-E Recommendations for Management of Street Wastes

Table of Figures

Figure 2.1: Covered Fuel Island 22
Figure 2.2: Drip Pan 31
Figure 2.3: Drip Pan Within Rails 32
Figure 2.4: Loading Dock with Door Skirt 33
Figure 2.5: Loading Dock with Overhang 34
Figure 2.6: Enclose the Activity 42
Figure 2.7: Cover the Activity 42
Figure 2.8: Secondary Containment System 53
Figure 2.9: Locking System for Drum Lid 54
Figure 2.10: Covered and Bermed Containment Area 55
Figure 2.11: Mounted Container - with drip pan 55
Figure 2.12: Above-ground Tank Storage 57
Figure 2.13: Covered Storage Area for Bulk Solids (include berm if needed) 59
Figure 2.14: Material Covered with Plastic Sheeting 60

Final Draft to ECY

This page purposely left blank

Final Draft to ECY

Chapter 1 Introduction

1.1 Purpose of this Book

This book provides guidance for selecting source control Best Management Practices (BMPs) to meet Minimum Requirement #3, in Book 1, and for meeting source control requirements pursuant to CCC 13.26A, Water Quality. Best Management Practices (BMPs) means schedules of activities, prohibitions of practices, maintenance procedures, and other physical, structural, and/or managerial practices that prevent or reduce the release of pollutants and other adverse impacts to waters of Washington State. BMPs can be used singularly or in combination.

Stormwater source control BMPs focus on preventing stormwater pollution from occurring, as opposed to other BMP types that attempt to reduce the volume, timing, or existing pollution in stormwater flows.

1.2 Content and Organization of this Book

Book 3 of the Clark County Stormwater Manual contains three chapters. Chapter 1 serves as an introduction and provides descriptions of operational and structural source control BMPs. It distinguishes between required (mandatory) BMPs, and recommended BMPs. It describes the relationship between the source control BMPs in this book and regulatory requirements.

In Chapter 2, Section 2.1 presents operational BMPs that are generally appropriate for commercial and industrial establishments. Section 2.2 contains operational and structural BMPs designed to address specific types of pollutant sources.

Chapter 3 presents suggested BMPs to prevent contamination of stormwater runoff for use on residential properties.

The appendices in this book contain additional information on selected topics. In particular, Appendix 3-A lists common pollutant sources associated with specific businesses and public agencies and Appendix 3-B describes types of pollutants found in stormwater.

1.3 How to Use this Book

Use this book to select specific BMPs for source control for inclusion in Stormwater Site Plans, as required in Book 1, Section 1.8.

Operators of commercial, industrial, and multifamily properties not under an Ecology permit should use this book in developing their Stormwater Pollution Prevention Plans (SWPPPs).

Owners and tenants of residential properties should use the book to learn about ways to avoid polluting waterways while caring for and maintaining the home and landscape.

Commercial, industrial and multifamily property owner users may consult Appendix 3-A regarding their specific businesses and activities and to identify their common pollutant sources. Then refer to Chapter 2 of this book to identify source control BMPs for a given type of pollutant source. Chapter 2 also contains design criteria for source control BMPs. Some users will wish to refer to additional appendices for specific information on regulatory requirements affecting their projects.

Residential users may consult Chapter 3 for a basic manual for source control on residential properties. Residential users may consult this chapter for information on how to care for home and yard without allowing pollutants to enter storm drains and waterways.

This book's appendices include additional educational materials for the user to better understand commonly known stormwater pollutants types and their typical generating sources. This information is provided to help meet the educational outreach requirements of the County's National Pollutant Discharge Elimination Systems (NPDES) Phase I Municipal Stormwater Permit.

This book identifies some source control treatment BMPs that apply to specific types of pollutant sources. For a more complete discussion of treatment BMP selection and design, refer to Books 1 and 2, respectively.

1.4 Operational and Structural Source Control BMPs

There are two categories of source control BMPs: operational and structural.

Operational source control BMPs are non-structural practices that prevent or reduce pollutants from entering stormwater. Examples include formation of a pollution prevention team, good housekeeping practices, preventive maintenance procedures, spill prevention and cleanup, employee training, inspections of pollutant sources, and record keeping. They can also include process changes, raw material/product changes, and recycling wastes. Section 2.1 contains a general discussion of operational source controls that are frequently used.

Most stormwater experts consider operational source control BMPs the most cost-effective practice to reduce pollution.

Structural source control BMPs are physical, structural, or mechanical devices or facilities intended to prevent pollutants from entering stormwater. Structural source control BMPs typically include:

- Enclosing and/or covering the pollutant source (e.g. within a building or other enclosure, a roof over storage and working areas, temporary tarp, etc.).
- Physically segregating the pollutant source to prevent run-on of uncontaminated stormwater.
- Devices that direct contaminated stormwater to appropriate treatment BMPs (e.g., discharge to a sanitary sewer if allowed by the local sewer authority).

Final Draft to FCY

1.5 Treatment BMPs for Specific Pollutant Sources

This book also identifies specific treatment BMPs that apply to particular pollutant sources, such as fueling stations, railroad yards, material storage and transfer areas, etc.

Treatment BMPs are intended to remove pollutants from stormwater. Examples include settling basins or vaults, oil/water separators, biofilters, wet ponds, constructed wetlands, infiltration systems, and emerging technologies such as media filtration.

1.6 Distinction between Required BMPs and Recommended BMPs

This book uses the terminology "required BMPs" and "recommended BMPs" to address an important distinction. This section explains the use of these terms.

1.6.1 Required (Mandatory) BMPs

The Phase I Municipal Stormwater Permit requires local governments to use operational and structural source control BMPs for pollutant generating sources.

Clark County requires the use of BMPs identified in this book as required (mandatory) at new developments and redevelopment sites, when applicable to meet Minimum Requirement #3, and at commercial, industrial, and multifamily properties, when applicable to meet the standards of Clark County Code (CCC) 13.26A.

Other facilities that are not required by an NPDES permit or Clark County to use the BMPs described in this book are encouraged to implement both required and recommended BMPs.

Regulatory programs such as the State Environmental Policy Act (SEPA), water quality certification under Section 401 of the Clean Water Act, and Hydraulic Project Approvals (HPAs) may require use of the BMPs described in this book.

1.6.2 Recommended BMPs

This book also contains recommended BMPs. Clark County offers these BMPs as approaches that go beyond or complement the required (mandatory) BMPs. Implementing the recommended BMPs may improve control of pollutants and provide a more comprehensive and environmentally effective stormwater management program. Ecology encourages all operators to review their SWPPPs and use recommended BMPs where possible.

1.7 Regulatory Requirements Affecting Stormwater Pollutant Control

This manual is equivalent to the *Stormwater Management Manual for Western Washington* (Ecology, 2012) as applied to a variety of state stormwater permits, including: the Construction General Stormwater Permit, the Industrial Stormwater General Permit, and the Sand and Gravel General Permit, as well as point source permits such as the Boatyard General Permit, Fresh Fruit Packing General Permit, Wastewater Treatment Permits, and others.

Refer to the Introduction to the Manual and to Appendix 3-D for information on related requirements from the following organizations:

- Clark County or Ecology requirements for discharges to storm drainage, discharges to sanitary sewers; stormwater flow control, treatment and pollutant source control; and air pollution control.
- Ecology requirements for dangerous or hazardous wastes, underground storage tanks, waste reduction, spill control and cleanup, and NPDES stormwater and wastewater discharge permit requirements.
- U. S. Environmental Protection Agency requirements for spill control and cleanup plans, and for NPDES permits on tribal lands.
- Washington State Department of Agriculture requirements for pesticide and fertilizer application control.
- Local Health Department requirements for the disposal of solid wastes to landfills or other facilities.
- U. S. Coast Guard requirements for transfer of petroleum products between marine vessels and onshore facilities and related spill control.
- Local and Washington State Fire Marshal requirements for storage and handling of flammable materials.

According to Washington state law, all hazardous material and oil spills must be reported immediately by the spiller. If you find a spill, but are not the spiller, you should also report it. Call the following THREE (3) numbers:

National Response Center: 800-424-8802 (24-hour line)
– AND –
Washington Emergency Management Division: 800-258-5990 –OR– 800-OILS-911 (24-hour line)
– AND –
Ecology Southwest Regional Office: 360-407-6300

For stormwater technical assistance or to report a water quality problem, call Clark County Environmental Services at 360-397-2121, ext. 4931.

Final Draft to FCY

Chapter 2 Selection of Operational and Structural Source Control BMPs

Urban stormwater pollutant sources include manufacturing and commercial areas; high use vehicle parking lots; material (including wastes) storage and handling; vehicle/equipment fueling, washing, maintenance, and repair areas; erodible soil; streets/highways; and the handling/application of de-icers and lawn care products.

Operators can achieve reduction or the elimination of stormwater pollutants by implementing operational source control BMPs. Operational source control BMPs include formation of a pollution prevention team, good housekeeping practices, preventive maintenance procedures, spill prevention and cleanup, employee training, regular inspections, and record keeping. These BMPs can be combined with impervious containments and covers, i.e., structural source control BMPs. If operational and structural source control BMPs are not feasible or adequate then stormwater treatment BMPs will be necessary. Owners should select cost-effective source control BMPs based on site-specific pollutants and their sources.

Refer to Section 1.6 of this book for the definitions of Required BMPs and Recommended BMPs.

Base the initial selection of source control BMPs on land use and the pollutant generating sources. Appendix 3-A describes various land uses, activities and the potential pollutant generating sources associated with those activities. The BMPs in this chapter may also be appropriate for land uses not listed in Appendix 3-A.

For example, if a commercial printing business conducts weed control with herbicides, loading and unloading of materials, and vehicle washing, it should refer to the following BMP sections for these activities:

- Landscaping and Lawn/Vegetation Management.
- Loading and Unloading Areas for Liquid or Solid Material.
- Washing and Steam Cleaning Vehicle/Equipment/Building Structures.
- Commercial Printing Operations.

2.1 Required (Mandatory) Operational Source Control BMPs

2.1.1 Sites & facilities that require the implementation of source control BMPs

Clark County requires implementation of the following listed seven operational source control BMPs at:

- Commercial properties
- Industrial properties
- Multifamily properties
- Boatyards
- Sand and gravel mining operations

1. Formation of a Pollution Prevention Team

- Assign one or more individuals to be responsible for stormwater pollution control. Hold regular meetings to review the overall operation of the BMPs. Establish responsibilities for inspections, operation, maintenance, and for emergencies. Train all team members in the operation, maintenance, and inspections of BMPs, and reporting procedures.

2. Good Housekeeping

- Promptly contain and clean up solid and liquid pollutant leaks and spills including oils, solvents, fuels, and dust from manufacturing operations on any exposed soil, vegetation, or paved area.
- Sweep all appropriate surfaces with vacuum sweepers quarterly or more frequently as needed for the collection and disposal of dust and debris that could contaminate stormwater.
- Do not hose down pollutants from any area to the ground, storm drains, conveyance ditches, or receiving water unless necessary for dust control purposes to meet air quality regulations. Convey pollutants before discharge to a treatment system approved by Clark County.
- Clean oils, debris, sludge, etc. from all stormwater facilities regularly, including catch basins, settling/detention basins, oil/water separators, boomed areas, and conveyance systems to prevent the contamination of stormwater. Refer to the section on Related Regulations in the Introduction to the Manual, Ecology Requirements for Generators of Dangerous Wastes, for references to assist in handling potentially dangerous waste.
- Promptly repair or replace all substantially cracked or otherwise damaged paved secondary containment, high-intensity parking, and any other drainage areas, subjected to pollutant material leaks or spills. Promptly repair or replace all leaking connections, pipes, hoses, valves, etc., which can contaminate stormwater.

Final Draft to ECY

- Do not connect floor drains in potential pollutant source areas to storm drains, surface water, or to the ground.

Recommended Additional Good Housekeeping BMPs

- Clean up pollutant liquid leaks and spills in impervious uncovered containment areas at the end of each working day.
- Use solid absorbents, e.g., clay and peat absorbents and rags for cleanup of liquid spills/leaks, where practicable.
- Promptly repair/replace/reseal damaged paved areas at industrial facilities.
- Recycle materials, such as oils, solvents, and wood waste, to the maximum extent practicable.

3. Preventive Maintenance

- Prevent the discharge of unpermitted liquid or solid wastes, process wastewater, and sewage to ground or surface water, or to storm drains that discharge to surface water, or to the ground. Conduct all oily parts cleaning, steam cleaning, or pressure washing of equipment or containers inside a building, or on an impervious contained area, such as a concrete pad. Direct contaminated stormwater from such an area to a sanitary sewer where allowed by local sewer authority, or to other approved treatment.
- Pressure wash impervious surfaces contaminated with oils, metals, sediment, etc. Collect the resulting washwater for proper disposal (usually involves plugging storm drains, or otherwise preventing discharge and pumping or vacuuming up washwater, for discharge to sanitary sewer or for vactor truck transport to a waste water treatment plant for disposal).
- Do not pave over contaminated soil unless it has been determined that ground water has not been and will not be contaminated by the soil. Call Ecology for assistance.
- Construct impervious areas that are compatible with the materials handled. Portland cement concrete, asphalt, or equivalent material may be considered.
- Use drip pans to collect leaks and spills from industrial/ commercial equipment such as cranes at ship/boat building and repair facilities, log stackers, industrial parts, trucks and other vehicles stored outside.
- At industrial and commercial facilities, drain oil and fuel filters before disposal. Discard empty oil and fuel filters, oily rags, and other oily solid waste into appropriately closed and properly labeled containers, and in compliance with the Uniform Fire Code or International Building Code.
- For the storage of liquids use containers, such as steel and plastic drums, that are rigid and durable, corrosion resistant to the weather and fluid content, non-absorbent, water tight, rodent-proof, and equipped with a close fitting cover.
- For the temporary storage of solid wastes contaminated with liquids or other potential polluted materials use dumpsters, garbage cans, drums, and comparable containers, which are durable,

corrosion resistant, non-absorbent, non-leaking, and equipped with either a solid cover or screen cover to prevent littering. If covered with a screen, the container must be stored under a roof or other form of adequate cover.

- Where exposed to stormwater, use containers, piping, tubing, pumps, fittings, and valves that are appropriate for their intended use and for the contained liquid.

Recommended Additional Preventive Maintenance BMPs

- Where feasible, store potential stormwater pollutant materials inside a building or under a cover and/or containment.
- Minimize use of toxic cleaning solvents, such as chlorinated solvents, and other toxic chemicals.
- Use environmentally safe raw materials, products, additives, etc. such as substitutes for zinc used in rubber production.
- Recycle waste materials such as solvents, coolants, oils, degreasers, and batteries to the maximum extent feasible. Refer to Appendix 3-C for recommendations on recycling or disposal of vehicle waste liquids and other waste materials.
- Empty drip pans immediately after a spill or leak is collected in an uncovered area.
- Stencil warning signs at stormwater catch basins and drains, e.g., "Dump no waste – Drains to waterbody."

  Note: Evidence of stormwater contamination by oils and grease can include the presence of visible sheen, color, or turbidity in the runoff, or present or historical operational problems at the facility. Operators can use simple pH tests, for example with litmus or pH paper. These tests can screen for high or low pH levels (anything outside a 6.5-8.5 range) due to contamination in stormwater.

4. Spill Prevention and Cleanup

According to Washington state law, all hazardous material and oil spills must be reported immediately by the spiller. If you find a spill, but are not the spiller, you should also report it. Call the following THREE (3) numbers:

National Response Center: 800-424-8802 (24-hour line)
– AND –
Washington Emergency Management Division: 800-258-5990 –OR– 800-OILS-911 (24-hour line)
– AND –
Ecology Southwest Regional Office: 360-407-6300

- Stop, contain, and clean up all spills immediately upon discovery.
- If pollutant materials are stored on-site, have spill containment and cleanup kits readily accessible.
- If the spill has reached or may reach a sanitary or a storm sewer, ground water, or surface water notify Clark County, Ecology, and the local sewer authority immediately. Notification must

Final Draft to ECY

comply with and federal spill reporting requirements. (See also record keeping at the end of this section and S406 BMPs for Spills of Oil and Hazardous Substances.)

- Do not flush or otherwise direct absorbent materials or other spill cleanup materials to a storm drain. Collect the contaminated absorbent material as a solid and place in appropriate disposal containers.

Recommended Additional Spill Prevention and Cleanup BMP

- Place and maintain emergency spill containment and cleanup kit(s) at outside areas where there is a potential for fluid spills. These kits should be appropriate for the materials and the size of a potential spill. Locate spill kits within 25 feet of all fueling/fuel transfer areas, including on-board mobile fuel trucks.

  Facilities covered under Industrial Stormwater General Permit must provide secondary containment for all chemical liquids, fluids, and petroleum products stored on-site.

  Note: Ecology recommends that the kit(s) include salvage drums or containers, such as high density polyethylene, polypropylene or polyethylene sheet-lined steel; polyethylene or equivalent disposal bags; an emergency response guidebook; safety gloves/clothes/equipment; shovels or other soil removal equipment; and oil containment booms and absorbent pads; all stored in an impervious container.

5. Employee Training

Train all employees that work in pollutant source areas in:

- Identifying pollutant sources
- Understanding pollutant control measures
- Responding to spills
- Handling practices that are environmentally acceptable. Particularly those related to vehicle/equipment liquids such as fuels, and vehicle/equipment cleaning.

6. Inspections

Qualified personnel shall conduct visual inspections monthly. Make and maintain a record of each inspection on-site . Inspections shall:

- Verify the accuracy of the pollutant source descriptions in the SWPPP.
- Verify the performance of the stormwater operational and structural source controls and the treatment BMPs.
- Reflect current conditions on the site.

- Include written observations of the presence of floating materials, suspended solids, oil and grease, discoloration, turbidity and odor in the stormwater discharges; in outside vehicle maintenance/repair; and liquid handling, and storage areas. In areas where acid or alkaline materials are handled or stored use a simple litmus or pH paper to identify those types of stormwater contaminants where needed.
- Eliminate or obtain a permit for unpermitted non-stormwater discharges to storm drains or receiving waters, such as process wastewater and vehicle/equipment washwater.

7. Record Keeping

This BMP is applicable to NPDES Permit holders.

Retain the following reports for five years:

- Visual inspection reports which should include:
    - Time and date of the inspection
    - Locations inspected
    - Statement on status of compliance with the permit
    - Summary report of any remediation activities required
    - Name, title, and signature of person conducting the inspection
- Reports on spills of oil or hazardous substances in greater than Reportable Quantities (Code of Federal Regulations Title 40 Parts 302.4 and 117). Report spills of the following: antifreeze, oil, gasoline, or diesel fuel, that cause:
    - A violation of the State of Washington's Water Quality Standards.
    - A film or sheen upon or discoloration of the waters of the State or adjoining shorelines.
    - A sludge or emulsion to be deposited beneath the surface of the water or upon adjoining shorelines.
- To report a spill or to determine if a spill is a substance of a Reportable Quantity, call the following THREE (3) numbers:

  Ecology Southwest Regional Office: (360) 407-6300

  – AND –

  Washington Emergency Management Division: 1-800-258-5990 or 1-800-OILS-911

  – AND –

  National Response Center: 1-800-424-8802

  Also, refer to Focus on Emergency Spill Response, Department of Ecology Publication # 97-1165-CP.

Final Draft to ECY

Additional Recommended Record Keeping

Maintain records of all related pollutant control and pollutant generating activities such as training, materials purchased, material use and disposal, maintenance performed, etc.

2.2 Pollutant Source-Specific BMPs

Clark County requires implementation of the required (mandatory) source control BMPs at the following types of sites where activities listed in this Book are taking place:

- Commercial properties
- Industrial properties
- Multifamily properties
- Boatyards
- Sand and gravel mining operations

The source-specific BMPs described in this section may be applied to control the sources of pollutants identified in Appendix 3-A. Ecology encourages all operators of facilities that implement pollutant-generating sources in Appendix 3-A to review their SWPPPs and use both the required (mandatory) and recommended BMPs where possible.

There are some emerging technologies that can be used as source controls. Washington State Department of Ecology developed the Technology Assessment Protocol – Ecology (TAPE) and Chemical Technology Assessment Protocol Ecology (CTAPE) protocols to help local governments in selecting new stormwater treatment technologies. Ecology posts information on emerging technologies at the emerging technologies website:
http://www.ecy.wa.gov/programs/wq/stormwater/newtech/index.html

S401 BMPs for the Building, Repair, and Maintenance of Boats and Ships

Description of Pollutant Sources: Sources of pollutants for the building, repair, and maintenance of boats and ships at boatyards, shipyards, ports, and marinas include pressure washing, surface preparation, paint removal, sanding, painting, engine maintenance and repairs, and material handling and storage, if conducted outdoors.

Potential pollutants include spent abrasive grits, solvents, oils, ethylene glycol, washwater, paint over-spray, cleaners/detergents, anti-corrosive compounds, paint chips, scrap metal, welding rods, resins, glass fibers, dust, and miscellaneous trash. Pollutant constituents include total suspected solids (TSS), oil and grease, organics, copper, lead, tin, and zinc.

Pollutant Control Approach: Apply good housekeeping, preventive maintenance, and cover and contain BMPs in and around work areas.

Required Operational BMPs

Ecology's NPDES Boatyard General Permit requires coverage of all boatyards in Washington State which engage in the construction, repair and maintenance of small vessels, 85% of which are 65 feet or less in length, or revenues from which constitute more than 85% of gross receipts. Ecology may require coverage under an individual NPDES permit for large boatyards and shipyards in Washington State not covered by the Boatyard General Permit or Industrial Stormwater General Permit (ISGP). The required operational BMPs are:

- Clean regularly all accessible work, service, and storage areas to remove debris, spent sandblasting material, and any other potential stormwater pollutants.
- Avoid the use of soaps, detergents and other chemicals that need to be rinsed or hosed off in the water. If necessary, consider applying sparingly so that a sponge, towel or rag can be used to remove residuals. Consider instead washing the boat in a suitable controlled area (see S431 BMPs for Washing and Steam Cleaning Vehicles/ Equipment/ Building Structures) while it is out of the water.
- Sweep rather than hose debris on the dock. Collect and convey hose water to treatment if hosing is unavoidable,
- Collect spent abrasives regularly and store under cover to await proper disposal.
- Dispose of greasy rags, oil filters, air filters, batteries, spent coolant, and degreasers properly.
- Drain oil filters before disposal or recycling.
- Immediately repair or replace leaking connections, valves, pipes, hoses and equipment that causes the contamination of stormwater.
- Use drip pans, drop cloths, tarpaulins, or other protective devices in all paint mixing and solvent operations unless carried out in impervious contained and covered areas.
- Convey sanitary sewage to pump-out stations, portable on-site pump-outs, or commercial mobile pump-out facilities or other appropriate onshore facilities.
- Maintain automatic bilge pumps in a manner that will prevent automatic pumping of waste material into surface water.
- Prohibit uncontained spray painting, blasting or sanding activities over open water.
- Do not dump or pour waste materials down floor drains, sinks, or outdoor storm drain inlets that discharge to surface water. Plug floor drains connected to storm drains or to surface water. If necessary, install a regularly operated sump pump.
- Prohibit outside spray-painting, blasting, or sanding activities during windy conditions that render containment ineffective.
- Do not burn paint and/or use spray guns on topsides or above decks.

Final Draft to ECY

- Immediately clean up any spillage on pier, wharf, boat, ship deck, or adjacent surface areas and dispose of the wastes properly.
- In the event of an accidental discharge of oil or hazardous material into waters of the state or onto land with a potential for entry into state waters, immediately notify the yard, port, or marina owner or manager, Clark County, the Department of Ecology, and the National Response Center (see Section 2.1 of this book). If the spill can reach or has reached marine water, call the U.S. Coast Guard at 1-800-424-8802.

Required Structural Source Control BMPs

- Use fixed platforms with appropriate plastic or tarpaulin barriers as work surfaces and for containment when performing work on a vessel in the water to prevent blast material or paint overspray from contacting stormwater or the receiving water. Keep use of such platforms to a minimum and do not perform extensive repair or construction in the water (anything in excess of 25 percent of the surface area of the vessel above the waterline).
- Use plastic or tarpaulin barriers beneath the hull and between the hull and dry dock walls to contain and collect waste and spent materials. Clean and sweep regularly to remove debris.
- Enclose, cover, or contain blasting and sanding activities to the maximum extent practicable to prevent abrasives, dust, and paint chips, from reaching storm sewers or receiving waters. Use plywood and/or plastic sheeting to cover open areas between decks when sandblasting (scuppers, railings, freeing ports, ladders, and doorways).
- Direct deck drainage to a collection system sump for settling and/or additional treatment.
- Store cracked batteries in covered secondary containers.
- Apply source control BMPs given in this chapter for other activities conducted at the marina, boat yard, shipyard, or port facility (S409 BMPs for Fueling at Dedicated Stations, S431 BMPs for Washing and Steam Cleaning Vehicle/Equipment/Building Structures, and S406 BMPs for Spills of Oil and Hazardous Substances).

Recommended Additional Operational BMPs

- Consider recycling paint, paint thinner, solvents, used oils, oil filters, pressure wash wastewater and any other recyclable materials.
- Perform paint and solvent mixing, fuel mixing, etc. on shore.

S402 BMPs for Commercial Animal Handling Areas

Description of Pollutant Sources: Animals at racetracks, kennels, fenced pens, veterinarians, and businesses that provide boarding services for horses, dogs, cats, etc., can generate pollutants from the following activities: manure deposits, animal washing, grazing, and any other animal handling activity that could contaminate stormwater. Pollutants can include coliform bacteria, nutrients, and

total suspended solids. Individual Stormwater Permits covering commercial animal handling facilities include additional required source controls.

Pollutant Control Approach: To prevent, to the maximum extent practicable, the discharge of contaminated stormwater from animal handling and keeping areas.

Required Operational BMPs

- Regularly sweep and clean animal keeping areas to collect and properly dispose of droppings, uneaten food, and other potential stormwater contaminants.
- Do not hose down areas that contain potential stormwater contaminants where they drain to storm drains or to receiving waters.
- Do not discharge any washwater to storm drains or to receiving waters without proper treatment.
- If the operator keeps animals in unpaved and uncovered areas, the ground must have either vegetative cover or some other type of ground cover such as mulch.
- Surround the area where animals are kept with a fence or other means to prevent animals from moving away from the controlled area where BMPs are used.

Final Draft to ECY

S403 BMPs for Commercial Composting

Description of Pollutant Sources: Commercial composting facilities, operating outside without cover, require large areas to decompose wastes and other feedstocks. Design these facilities to separate stormwater from leachate (i.e., industrial wastewater) to the greatest extent possible. When stormwater contacts any active composting areas, including waste receiving and processing areas, it becomes leachate. Pollutants in leachate include nutrients, biochemical oxygen demand (BOD), organics, coliform bacteria, acidic pH, color, and suspended solids. Stormwater at composting facilities include runoff from areas not associated with active processing and curing, such as product storage areas, vehicle maintenance areas, and access roads.

NPDES and State Solid Waste Permit Requirements: Solid Waste Regulations require the collection and containment of all leachate produced from activities at commercial composting facilities. Composting facilities that propose to discharge to surface water, municipal sewer system, or ground water must obtain the appropriate permits. Zero discharge is possible by containing all leachate from the facility (in tanks or ponds) for use early in the composting process or preventing production of leachate (by composting under a roof or in an enclosed building).

Pollutant Control Approach: Consider zero leachate discharge.

Required Operational BMPs

- Ensure that the compost feedstocks do not contain dangerous wastes, regulated under Chapter 173-303 Washington Administrative Code (WAC) or hazardous products of a similar nature, or solid wastes that are not beneficial to the composting process. Train employees to screen these materials out of incoming feedstocks.
- All composting facilities shall obtain the appropriate state and local permits. Contact your local permitting authority and local health department for more information.
- Apply for coverage under the Industrial Stormwater General Permit if the facility discharges stormwater to surface water or a municipal stormwater system. If all stormwater from the facility properly infiltrates to ground water, the Industrial Stormwater General Permit is not required. There are some cases where an Individual State Waste Discharge permit is required. Check with your local Ecology office and health department to discuss your permitting options.
- Store finished compost in a manner to prevent contamination of stormwater.

Required Structural Source Control BMPs

- Compost pads are required.
- Provide curbing for all compost pads to prevent stormwater run-on and leachate run-off.
- Slope all compost pads sufficiently to direct leachate to the collection device.
- Provide one or more sumps or catch basins capable of collecting all leachate generated by the design storm and conveying it to the leachate holding structure for all compost pads.

Required Treatment BMPs

- Convey all leachate from composting operations to a sanitary sewer, holding tank, or on-site treatment systems designed to treat the leachate and TSS.
- Line ponds used to collect, store, or treat leachate and other contaminated waters associated with the composting process. Ponds shall meet the design standards of WAC 173-350-220, including All Known Available and Reasonable Methods of Prevention and Treatment (AKART). Maintain all pond liners, regardless of the construction materials.

Recommended Additional BMPs

- Clean up debris from yard areas regularly.
- Locate stored residues in areas designed to collect leachate.
- Limit storage times of residues to prevent degradation and generation of leachate.
- Consider using leachate as make-up water in early stages of the composting process. Do not use lechate for moisture or dust control, on finished products or nearly finished compost since

leachate can contain pathogenic bacteria. This recommended practice will limit the potential re-inoculation of these materials with pathogens.

- In areas of the state with dry climates, consider using evaporation as a means of reducing the quantity of leachate.

S404 BMPs for Commercial Printing Operations

Description of Pollutant Sources: Materials used in the printing process include inorganic and organic acids, resins, solvents, polyester film, developers, alcohol, vinyl lacquer, dyes, acetates, and polymers. Waste products may include waste inks and ink sludge, resins, photographic chemicals, solvents, acid and alkaline solutions, chlorides, chromium, zinc, lead, spent formaldehyde, silver, plasticizers, and used lubricating oils. With indoor printing operations, the only likely points of potential contact with stormwater are the outside temporary storage of waste materials and offloading of chemicals at external unloading bays. Pollutants can include TSS, pH, heavy metals, oil and grease, and biological oxygen demand (BOD).

Pollutant Control Approach: Ensure appropriate disposal and NPDES permitting of process wastes. Cover and contain stored raw and waste materials.

Required Operational BMPs

- Discharge process wastewaters to a sanitary sewer, if approved by the local sewer authority, or to an approved process wastewater treatment system.
- Do not discharge process wastes or wastewaters into storm sewers or surface water.
- Determine whether any of these wastes qualify for regulation as dangerous wastes and dispose of them accordingly.

Required Structural Source Control BMP

- Store raw materials or waste materials that could contaminate stormwater in covered and contained areas.

Recommended Additional BMPs

- Train all employees in pollution prevention, spill response, and environmentally acceptable materials handling procedures.
- Store materials in proper, appropriately labeled containers. Identify and label all chemical substances.
- Regularly inspect all stormwater management devices and maintain as necessary.
- Try to use press washes without listed solvents, and with the lowest volatile organic compound (VOC) content possible. Do not evaporate ink cleanup trays to the outside atmosphere.

Final Draft to Ecy

- Place cleanup sludges into a container with a tight lid and dispose of as dangerous waste. Do not dispose of cleanup sludges in the garbage or in containers of soiled towels.

For additional information on pollution prevention, Ecology recommends the following Washington Department of Ecology publications: *A Guide for Screen Printers*, Publication #94-137 and *A Guide for Lithographic Printers*, Publication #94-139.

S405 BMPs for Deicing and Anti-Icing Operations - Airports and Streets

Description of Pollutant Sources: Operators use deicing and/or apply anti-icing compounds on highways, streets, airport runways, and on aircraft to control ice and snow. Typically, ethylene glycol and propylene glycol are deicers used on aircraft. Deicers commonly used on highways and streets include calcium magnesium acetate (CMA), calcium chloride, magnesium chloride, sodium chloride, urea, and potassium acetate. The deicing and anti-icing compounds become pollutants when conveyed to storm drains or to surface water after application. Leaks and spills of these chemicals can also occur during their handling and storage.

Refer to 40 CFR Part 449 for EPA effluent limitations guidelines and new source performance standards to control discharges of pollutants from airport deicing operations.

BMPs for Airport De/anti-icing Operations

Pollutant Control Approach for Aircraft: Spent glycol discharges in aircraft application areas are regulated process wastewaters under Ecology's Industrial Stormwater General Permit. BMPs for aircraft de/anti-icers must be consistent with aviation safety and the operational needs of the aircraft operator.

Aircraft

Required BMPs

Note this required containment BMP of aircraft de/anti-icing applications, and required treatment BMPs for de/anti-icer spent chemicals such as glycols.

- Conduct aircraft deicing or anti-icing applications in impervious containment areas. Collect aircraft deicer or anti-icer spent chemicals, such as glycol, draining from aircraft in deicing or anti-icing application areas and convey to a sanitary sewer, treatment, or other approved disposal or recovery method. Divert deicing runoff from paved gate areas to appropriate collection areas or conveyances for proper treatment or disposal.
- Do not discharge spent deicer or anti-icer chemicals or stormwater contaminated with aircraft deicer or anti-icer chemicals from application areas, including gate areas into storm drains. No discharge to surface water, or ground water, directly or indirectly should occur.

Transfer deicing and anti-icing chemicals on an impervious containment pad, or equivalent spill/leak containment area, and store in secondary containment areas. (See Storage of Liquids in Aboveground Tanks.) Recommended Additional BMPs:

- Establish a centralized aircraft de/anti-icing facility, if practicable, or in designated areas of the tarmac equipped with separate collection drains for the spent deicer liquids.
- Consider installing an aircraft de/anti-icing chemical recovery system, or contract with a chemical recycler.

Airport Runways/Taxiways

Required BMPs

- Avoid excessive application of all de/anti-icing chemicals, which could contaminate stormwater.
- Store and transfer de/anti-icing materials on an impervious containment pad or an equivalent containment area and/or under cover in accordance with BMP Storage or Transfer (Outside) of Solid Raw Materials, By-Products, or Finished Products. Consider other material storage and transfer approaches only if, the de/anti-icer material will not contaminate stormwater.

Recommended Additional BMPs

- Include limits on toxic materials and phosphorous in the specifications for de/anti-icers, where applicable.
- Consider using anti-icing materials rather than deicers if it will result in less adverse environmental impact.
- Select cost-effective de/anti-icers that cause the least adverse environmental impact.

S406 BMPs for Streets/ Highways

Required BMPs

- Select de and anti-icers that cause the least adverse environmental impact. Apply only as needed using minimum quantities.
- Where practicable use roadway deicers, such as calcium magnesium acetate, potassium acetate, or similar materials, that cause less adverse environmental impact than urea, and sodium chloride.
- Store and transfer de and anti-icing materials on an impervious containment pad in accordance with BMP Storage or Transfer (Outside) of Solid Raw Materials, By-Products, or Finished Products in this book.
- Sweep/clean up accumulated de and anti-icing materials and grit from roads as soon as possible after the road surface clears.

Final Draft to FCY

Recommended Additional BMPs

- Intensify roadway cleaning in early spring to help remove particulates from road surfaces.
- Include limits on toxic metals in the specifications for de/anti-icers.

S407 BMPs for Dust Control at Disturbed Land Areas and Unpaved Roadways and Parking Lots

Description of Pollutant Sources: Dust can cause air and water pollution problems particularly at demolition sites and in dry weather where reduced rainfall exposes soil particles to transport by air.

Pollutant Control Approach: Minimize dust generation and apply environmentally friendly and government approved dust suppressant chemicals, if necessary.

Required Operational BMPs

- Sprinkle or wet down soil or dust with water as long as it does not result in a wastewater discharge.
- Use only local and/or state government approved dust suppressant chemicals such as those listed in Ecology Publication #96-433, *Techniques for Dust Prevention and Suppression*.
- Avoid excessive and repeated applications of dust suppressant chemicals. Time the application of dust suppressants to avoid or minimize their wash-off by rainfall or human activity such as irrigation.
- Apply stormwater containment to prevent the conveyance of sediment into storm drains or receiving waters.
- Ecology prohibits the use of motor oil for dust control. Take care when using lignin derivatives and other high BOD chemicals in areas susceptible to contaminating surface water or ground water.
- Consult with Ecology and the local permitting authority on discharge permit requirements if the dust suppression process results in a wastewater discharge to the ground, ground water, storm drain, or surface water.

Recommended Additional Operational BMPs for Roadways and Other Trafficked Areas

- Consider limiting use of off-road recreational vehicles on dust generating land.
- Consider graveling or paving unpaved permanent roads and other trafficked areas at municipal, commercial, and industrial areas.

- Consider paving or stabilizing shoulders of paved roads with gravel, vegetation, or local government approved chemicals.
- Encourage use of alternate paved routes, if available.
- Vacuum sweep fine dirt and skid control materials from paved roads soon after winter weather ends or when needed.
- Consider using pre-washed traction sand to reduce dust emissions.

Additional Recommended Operational BMPs for Dust Generating Areas

- Prepare a dust control plan. Helpful references include: Control of Open Fugitive Dust Sources (EPA-450/3-88-088), and Fugitive Dust Background Document and Technical Information Document for Best Available Control Measures (EPA-450/2-92-004).
- Limit exposure of soil (dust source) as much as feasible.
- Stabilize dust-generating soil by growing and maintaining vegetation, mulching, topsoiling, and/or applying stone, sand, or gravel.
- Apply windbreaks in the soil such as trees, board fences, tarp curtains, bales of hay, etc.

S408 BMPs for Dust Control at Manufacturing Areas

Description of Pollutant Sources: Industrial material handling activities can generate considerable amounts of dust that is typically removed using exhaust systems. Mixing cement and concrete products and handling powdered materials can also generate dust. Particulate materials that can cause air pollution include grain dust, sawdust, coal, gravel, crushed rock, cement, and boiler fly ash. Air emissions can contaminate stormwater. The objective of this BMP is to reduce the stormwater pollutants caused by dust generation and control.

Pollutant Control Approach: Prevent dust generation and emissions where feasible, regularly clean-up dust that can contaminate stormwater, and convey dust contaminated stormwater to proper treatment.

Required BMPs

- Clean, as needed, powder material handling equipment and vehicles.
- Regularly sweep dust accumulation areas that can contaminate stormwater. Conduct sweeping using vacuum filter equipment to minimize dust generation and to ensure optimal dust removal.

Recommended BMPs

- In manufacturing operations, train employees to handle powders carefully to prevent generation of dust.

Final Draft to ECY

- Use dust filtration/collection systems such as bag house filters, cyclone separators, etc. to control vented dust emissions that could contaminate stormwater. Control of zinc dusts in rubber production is one example.
- Use water spray to flush dust accumulations to sanitary sewers where allowed by the local sewer authority or to other appropriate treatment system.
- Use approved dust suppressants such as those listed in Ecology Publication *Techniques for Dust Prevention and Suppression*, #96-433 (Ecology, 1996). Application of some products may not be appropriate in close proximity to receiving waters or conveyances close to receiving waters. For more information, check with Ecology.

Recommended Treatment BMPs

- Install sedimentation basins, wet ponds, wet vaults, catch basin filters, vegetated filter strips, or equivalent sediment removal BMPs.

S409 BMPs for Fueling At Dedicated Stations

Description of Pollutant Sources: A fueling station is a facility dedicated to the transfer of fuels from a stationary pumping station to mobile vehicles or equipment. It includes above or under-ground fuel storage facilities. In addition to general service gas stations, fueling may also occur at 24-hour convenience stores, construction sites, warehouses, car washes, manufacturing establishments, port facilities, and businesses with fleet vehicles. Typical causes of stormwater contamination at fueling stations include leaks/spills of fuels, lube oils, radiator coolants, and vehicle washwater.

Pollutant Control Approach: New or substantially remodeled[1] fueling stations must be constructed on an impervious concrete pad under a roof to keep out rainfall and stormwater run-on. The facility must use a treatment BMP for contaminated stormwater and wastewaters in the fueling containment area.

For New or Substantially Remodeled Fueling Stations

Required Operational BMPs

- Prepare an emergency spill response and cleanup plan (per S426 BMPs for Spills of Oil and Hazardous Substances) and have designated trained person(s) available either on site or on call at all times to promptly and properly implement that plan and immediately cleanup all spills. Keep

[1] Substantial remodeling includes replacing the canopy, or relocating or adding one or more fuel dispensers in such a way that modify the Portland cement concrete (or equivalent) paving in the fueling area.

suitable cleanup materials, such as dry adsorbent materials, on site to allow prompt cleanup of a spill.

- Train employees on the proper use of fuel dispensers. Post signs in accordance with the Uniform Fire Code (UFC) or International Fire Code (IFC). Post "No Topping Off" signs (topping off gas tanks causes spillage and vents gas fumes to the air). Make sure that the automatic shutoff on the fuel nozzle is functioning properly.
- The person conducting the fuel transfer must be present at the fueling pump during fuel transfer, particularly at unattended or self-serve stations.
- Keep drained oil filters in a suitable container or drum.

Required Structural Source Control BMPs

- Design the fueling island to control spills (dead-end sump or spill control separator in compliance with the UFC or IFC), and to treat collected stormwater and/or wastewater to required levels. Slope the concrete containment pad around the fueling island toward drains; either trench drains, catch basins and/or a dead-end sump. The slope of the drains shall not be less than 1 percent (Section 7901.8 of the UFC, Section 5703.6.8 of the IFC).
- Drains to treatment facilities must have a normally closed shutoff valve. The spill control sump must be sized in compliance with Section 7901.8 of the UFC; or
- Design the fueling island as a spill containment pad with a sill or berm raised to a minimum of four inches (Section 7901.8 of the UFC) to prevent the runoff of spilled liquids and to prevent run-on of stormwater from the surrounding area. Raised sills are not required at the open-grate trenches that connect to an approved drainage-control system.

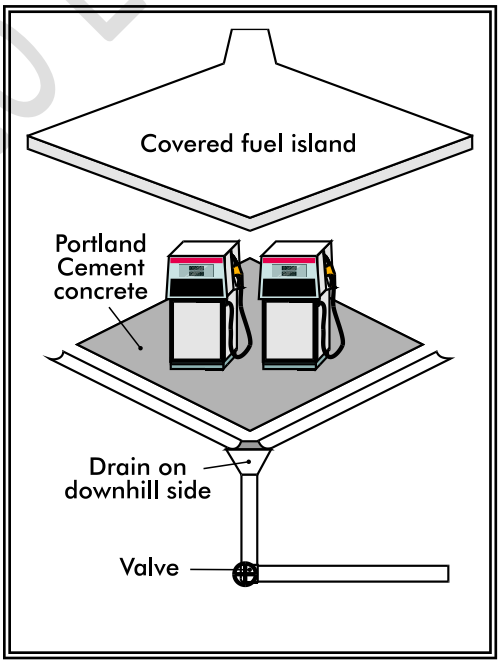

- The fueling pad must be paved with Portland cement concrete, or equivalent. Ecology does not consider asphalt an equivalent material.
- The fueling island must have a roof or canopy to prevent the direct entry of precipitation onto the spill containment pad (see Figure 2.1). The roof or canopy should, at a minimum, cover the spill containment pad (within the grade break or fuel dispensing area) and preferably extend several additional feet to reduce the introduction of windblown rain. Convey all roof drains to storm drains outside the fueling containment area.
- Convey stormwater collected on the fuel island containment pad to a sanitary sewer system, if approved by the sanitary authority, or to an approved treatment system such as an oil/water separator and a basic treatment BMP. (Basic treatment BMPs are listed in Book 1 and include

Final Draft to Ecy

media filters and biofilters). Discharges from treatment systems to storm drains or surface water or to the ground must not display ongoing or recurring visible sheen and must not contain oil and grease.

- Alternatively, collect stormwater from the fuel island containment pad and hold for proper off-site disposal.
- Approval from the local sewer authority is required for conveyance of any fuel-contaminated stormwater to a sanitary sewer. The discharged stormwater must comply with pretreatment regulations (WAC 173-216-060). These regulations prohibit discharges that could "cause fire or explosion." State and federal pretreatment regulations define an explosive or flammable mixture, based on a flash point determination of the mixture. Stormwater could be conveyed to a sanitary sewer system if it is determined not to be explosive.
- Transfer the fuel from the delivery tank trucks to the fuel storage tank in impervious contained areas and ensure that appropriate overflow protection is used. Alternatively, cover nearby storm drains during the filling process and use drip pans under all hose connections.

Additional BMP for Vehicles 10 Feet in Height or Greater

A roof or canopy may not be feasible at fueling stations that regularly fuel vehicles that are 10 feet in height or greater, particularly at industrial or Washington Department of Transportation (WSDOT) sites. At those types of fueling facilities, the following BMPs apply, as well as the required BMPs and fire prevention (UFC requirements) of this BMP for fueling stations:

- If a roof or canopy is impractical, the concrete fueling pad must be equipped with emergency spill control including a shutoff valve for drainage from the fueling area. Maintain the valve in the closed position in the event of a spill. An electronically actuated valve is preferred to minimize the time lapse between spill and containment. Clean up spills and dispose of materials off-site in accordance with S406 BMPs for Spills of Oil and Hazardous Substances.
- The valve may be opened to convey contaminated stormwater to a sanitary sewer, if approved by the sewer authority, or to oil removal treatment such as an API or CP oil/water separator, catchbasin insert, or equivalent treatment, and then to a basic treatment BMP. Discharges from treatment systems to storm sewer or surface water or to the ground must not display ongoing or recurring visible sheen and must not contain greater than a significant amount of oil and grease.

S410 BMPs for Illicit Connections to Storm Drains

Description of Pollutant Sources: Illicit connections are unpermitted sanitary or process wastewater discharges to a storm sewer or to surface water, rather than to a sanitary sewer, industrial process wastewater, or other appropriate treatment. They can also include swimming pool water, filter backwash, cleaning solutions/washwaters, cooling water, etc. Experience has shown that illicit connections are common, particularly in older buildings.

Pollutant Control Approach: Identify and eliminate unpermitted discharges or obtain an NPDES permit, where necessary, particularly at industrial and commercial facilities.

Required Operational BMPs

- Eliminate unpermitted wastewater discharges to storm sewer, ground water, or surface water.
- Convey unpermitted discharges to a sanitary sewer if allowed by the local sewer authority, or to other approved treatment.
- Obtain appropriate state and local permits for these discharges.
- Notify Clark County Environmental Services at (360) 397-2121 and the appropriate sewer provider immediately if an illicit connection is discovered.

Recommended Additional Operational BMPs

At commercial and industrial facilities, conduct a survey of wastewater discharge connections to storm drains and to surface water as follows:

- Conduct a field survey of buildings, particularly older buildings, and other industrial areas to locate storm drains from buildings and paved surfaces. Note where these join the public storm drain(s).
- During non-stormwater conditions inspect each storm drain for non-stormwater discharges. Record the locations of all non-stormwater discharges. Include all permitted discharges.
- If useful, prepare a map of each area. Show on the map the known location of storm sewers, sanitary sewers, and permitted and unpermitted discharges. Aerial photos may be useful. Check records such as piping schematics to identify known side sewer connections and show these on the map. Consider using smoke, dye, or chemical analysis tests to detect connections between two conveyance systems (e.g., process water and stormwater). If desirable, conduct TV inspections of the storm drains and record the footage on videotape.
- Compare the observed locations of connections with the information on the map and revise the map accordingly. Note suspect connections that are inconsistent with the field survey.
- Identify all connections to storm sewers or to surface water and take the actions specified above as required BMPs.

S411 BMPs for Landscaping and Lawn / Vegetation Management

Description of Pollutant Sources: Landscaping can include grading, soil transfer, vegetation removal, pesticide and fertilizer applications, and watering. Stormwater contaminants include toxic organic compounds, heavy metals, oils, total suspended solids, coliform bacteria, fertilizers, and pesticides.

Final Draft to ECY

Lawn and vegetation management can include control of objectionable weeds, insects, mold, bacteria, and other pests with pesticides. Examples include weed control on golf course lawns, access roads, and utility corridors and during landscaping; sap stain and insect control on lumber and logs; rooftop moss removal; killing nuisance rodents; fungicide application to patio decks, and residential lawn/plant care. It is possible to release toxic pesticides such as pentachlorophenol, carbamates, and organometallics to the environment by leaching and dripping from treated parts, container leaks, product misuse, and outside storage of pesticide contaminated materials and equipment. Poor management of the vegetation and poor application of pesticides or fertilizers can cause appreciable stormwater contamination.

Pollutant Control Approach: Control of fertilizer and pesticide applications, soil erosion, and site debris to prevent contamination of stormwater.

Develop and implement an Integrated Pest Management Plan (IPM) that considers cultural, mechanical, biological, and chemical control methods. Use pesticides in a manner that is safe and effective. Carefully apply pesticides/ herbicides, in accordance with label instructions. Maintain appropriate vegetation, with proper fertilizer application where practicable, to control erosion and the discharge of stormwater pollutants. Where practicable, grow plant species appropriate for the site, or adjust the soil properties of the site to grow desired plant species.

Landscaping

Required Operational BMPs for Landscaping

- Install engineered soil/landscape systems to improve the infiltration and regulation of stormwater in landscaped areas.
- Do not dispose of collected vegetation into waterways or storm sewer systems.

Recommended Additional Operational BMPs for Landscaping

- Conduct mulch-mowing whenever practicable
- Dispose of grass clippings, leaves, sticks, or other collected vegetation by composting, if feasible.
- Use mulch or other erosion control measures on soils exposed for more than one week during the dry season or for more than two days during the rainy season.
- Store and maintain appropriate oil and chemical spill cleanup materials in readily accessible locations when using oil or other chemicals. Ensure that employees are familiar with proper spill cleanup procedures.
- Till fertilizers into the soil rather than dumping or broadcasting onto the surface. Determine the proper fertilizer application rate for the types of soil and vegetation encountered.
- Till a topsoil mix or composted organic material into the soil to create a well-mixed transition layer that encourages deeper root systems and drought-resistant plants.

- Use manual and/or mechanical methods to remove vegetation rather than applying herbicides, where practical and effective.

Pesticide Use

Required Operational BMPs for the Use of Pesticides

- Apply the pesticide according to label directions. Do not apply pesticides in quantities that exceed manufacturer's instructions.
- Mix the pesticides and clean the application equipment in an area where accidental spills will not enter surface or ground waters, and will not contaminate the soil.
- Store pesticides in enclosed areas or in covered impervious containment. Do not discharge pesticide contaminated stormwater or spills/leaks of pesticides to storm sewers. Do not hose down the paved areas to a storm sewer or conveyance ditch. Store and maintain appropriate spill cleanup materials in a location known to all near the storage area.
- Clean up any spilled pesticides. Keep pesticide contaminated waste materials in designated covered and contained areas.
- Pesticide application equipment must be capable of immediate shutoff in the event of an emergency.
- Do not spray pesticides into open waters including wetlands, ponds, streams, sloughs and any drainage ditch or channel that leads to open water, except when following approval of Ecology or Clark County. Flag all sensitive areas including wells, creeks, and wetlands prior to spraying.
- Post notices and delineate the spray area prior to the application, as required by Ecology.
- Conduct spray applications during weather conditions as specified in the label direction and applicable state regulations. Do not apply during windy conditions, rain, or immediately before expected rain.

Recommended Additional Operational BMPs for the Use of Pesticides

- Develop and implement an IPM Plan that considers cultural, mechanical, biological, and chemical control methods (see section on IPM in Required Operational BMPs for Vegetation Management, below) and use pesticides in a manner that is safe and effective.
- Choose the least toxic pesticide available that is capable of reducing the infestation to acceptable levels. The pesticide should readily degrade in the environment and/or have properties that strongly bind it to the soil. Conduct any pest control activity at the life stage when the pest is most vulnerable. For example, if it is necessary to use a Bacillus thuringiens application to control tent caterpillars, apply it to the material before the caterpillars cocoon or it will be ineffective. Any method used should be site-specific and not used wholesale over a wide area.
- Consider alternatives to the use of pesticides such as covering or harvesting weeds, substitute vegetative growth, and manual weed control/moss removal.

Final Draft to Ecy

- Consider the use of soil amendments, such as compost, that are known to control some common diseases in plants, such as Pythium root rot, ashy stem blight, and parasitic nematodes. The following are three possible mechanisms for disease control by compost addition (EPA Publication 530-F-97-044):

    1. Successful competition for nutrients by antibiotic production;
    2. Successful predation against pathogens by beneficial microorganism; and
    3. Activation of disease-resistant genes in plants by composts.

  Installing an amended soil/landscape system can preserve both the plant system and the soil system more effectively. This type of approach provides a soil/landscape system with adequate depth, permeability, and organic matter to sustain itself and continue working as an effective stormwater infiltration system and a sustainable nutrient cycle.

- Once a pesticide is applied, evaluate its effectiveness for possible improvement. Records should be kept showing the effectiveness of the pesticides considered.
- Use rinse water from equipment cleaning and/or triple-rinsing of pesticide containers as product or recycled into product.

  For more information, contact the Washington State University (WSU) Extension Home-Assist Program, (253) 445-4556, or Bio-Integral Resource Center (BIRC), P.O. Box 7414, Berkeley, CA, 94707, or EPA to obtain a publication entitled "Suspended, Canceled, and Restricted Pesticides" which lists all restricted pesticides and the specific uses that are allowed.

Vegetation Management

Recommended Operational BMPs for Vegetation Management

- Use at least an eight-inch "topsoil" layer with at least 8 percent organic matter to provide a sufficient vegetation-growing medium. Amending existing landscapes and turf systems by increasing the percent organic matter and depth of topsoil can substantially improve the permeability of the soil, the disease and drought resistance of the vegetation, and reduce fertilizer demand. This reduces the demand for fertilizers, herbicides, and pesticides. Organic matter is the least water-soluble form of nutrients that can be added to the soil. Composted organic matter generally releases only between 2 and 10 percent of its total nitrogen annually, and this release corresponds closely to the plant growth cycle. Return natural plant debris and mulch to the soil, to continue recycling nutrients indefinitely.
- Select the appropriate turfgrass mixture for the climate and soil type. Certain tall fescues and rye grasses resist insect attack because the symbiotic endophytic fungi found naturally in their tissues repel or kill common leaf and stem-eating lawn insects. However, they do not repel root-feeding lawn pests such as Crane Fly larvae, and are toxic to ruminants such as cattle and sheep. The fungus causes no known adverse effects to the host plant or to humans. Endophytic grasses are

commercially available; use them in areas such as parks or golf courses where grazing does not occur. Local agricultural or gardening resources such as Washington State University (WSU) Extension office can offer advice on which types of grass are best suited to the area and soil type.

- Use the following seeding and planting BMPs, or equivalent BMPs, to obtain information on grass mixtures, temporary and permanent seeding procedures, maintenance of a recently planted area, and fertilizer application rates: BMP C120 Temporary and Permanent Seeding, BMP C121 Mulching, BMP C123 Plastic Covering, and BMP C124 Sodding as described in Book 2.
- Adjusting the soil properties of the subject site can assist in selection of desired plant species. For example, design a constructed wetland to resist the invasion of reed canary grass by layering specific strata of organic matters (e.g., composted forest product residuals) and creating a mildly acidic pH and carbon-rich soil medium. Consult a soil restoration specialist for site-specific conditions.
- Aerate lawns regularly in areas of heavy use where the soil tends to become compacted. Conduct aeration while the grasses in the lawn are growing most vigorously. Remove layers of thatch greater than ¾-inch deep.
- Mowing is a stress-creating activity for turfgrass. Grass decreases its productivity when mown too short and there is less growth of roots and rhizomes. The turf becomes less tolerant of environmental stresses, more disease prone and more reliant on outside means such as pesticides, fertilizers, and irrigation to remain healthy. Set the mowing height at the highest acceptable level and mow at times and intervals designed to minimize stress on the turf. Generally mowing only 1/3 of the grass blade height will prevent stressing the turf.

Irrigation

- The depth from which a plant normally extracts water depends on the rooting depth of the plant. Appropriately irrigated lawn grasses normally root in the top 6 to 12 inches of soil; lawns irrigated on a daily basis often root only in the top 1 inch of soil. Improper irrigation can encourage pest problems, leach nutrients, and make a lawn completely dependent on artificial watering. The amount of water applied depends on the normal rooting depth of the turfgrass species used, the available water holding capacity of the soil, and the efficiency of the irrigation system. Consult with the local water utility, Conservation District, or Cooperative Extension office to help determine optimum irrigation practices.

Fertilizer Management

- Turfgrass is most responsive to nitrogen fertilization, followed by potassium and phosphorus. Fertilization needs vary by site depending on plant, soil, and climatic conditions. Evaluation of soil nutrient levels through regular testing ensures the best possible efficiency and economy of fertilization. For details on soils testing, contact the local Conservation District, a soils testing professional, or a Washington State University Extension office.
- Apply fertilizers in amounts appropriate for the target vegetation and at the time of year that minimizes losses to surface and ground waters. Do not fertilize when the soil is dry.

Final Draft to ECY

Alternatively, do not apply fertilizers within three days prior to predicted rainfall. The longer the period between fertilizer application and either rainfall or irrigation, the less fertilizer runoff occurs.

- Use slow release fertilizers such as methylene urea, isobutylidene diurea (IBDU), or resin coated fertilizers when appropriate, generally in the spring. Use of slow release fertilizers is especially important in areas with sandy or gravelly soils.
- Time the fertilizer application to periods of maximum plant uptake.
- Properly trained persons should apply all fertilizers. Apply no fertilizer at commercial and industrial facilities, to grass swales, filter strips, or buffer areas that drain to sensitive water bodies unless approved by Clark County.

Integrated Pest Management

IPM plans for both short-term pest control and long-term sustainable land management. An IPM program might consist of the following steps:

Step 1: Correctly identify problem pests and understand their life cycles.

IPM starts with an understanding of the soil, water, natural resources, and human impacts on site. Identify and research the pest species, including basic physiology and best timing for control. Many pests are a problem during certain seasons or can only be treated in specific phases of the life cycle. Resources for help identifying local pests include Clark County Weed Board, WSU Extension Master Gardeners, online tools from Washington State Noxious Weed Control Board, and online tools from Washington Invasive Species Council.

Step 2: Establish tolerance thresholds for pests.

Every landscape has a population of some pest insects, weeds, and diseases. Once the pest has been identified and studied, determine if low levels of the pest are tolerable. Small numbers of certain pests may not be harmful. If this is the case, simply continue to monitor the pest population.

In other cases, the pest may require control. Examples include a pest population that is rapidly increasing in numbers, or an invasive weed that requires control according to state law. Early detection, rapid response (EDRR) plays an important role in the control of pests that are known to be a severe problem in other regions but are not yet occurring in Clark County. In this instance, the tolerance threshold is zero; a quick response to eliminate a future ongoing pest problem is the safest and least expensive control.

Step 3: If pests exceed tolerance thresholds, choose a safe and effective control method.

IPM identifies physical, cultural, biological, and chemical control methods tailored specifically for the pest of concern and the site. Research the available options and choose a control method that is

effective. Preferred control methods are economical, low risk to people, and mindful of environmental processes.

Physical control works on a pest directly: digging, hand-pulling, mowing, tilling, trapping, etc.

Cultural control changes the pest's environment: landscape fabric, mulch, soil amendments, altering the irrigation method or duration, crop rotation, crop covers, etc.

Biological control uses natural enemies: beneficial insects, managed grazing, bird boxes and perches, etc.

Chemical control is the use of pesticides: insect bait stations, synthetic and organic foliar herbicides, microbial-based insecticides, oils, soaps, etc.

These control methods should be looked at as tools in a toolbox; IPM selects the right tools for the job at hand. Both short-term control and long-term management is best achieved by using more than one tool. Often, implementing cultural control methods reduces the amount of physical and chemical control needed.

Step 4: Monitor and evaluate.

Observe and record the results of the control treatment. Evaluate the effectiveness. If necessary, modify maintenance practices to support a healthy landscape and prevent recurrence of the pest.

IPM emphasizes that pest control is a process that should be viewed as a cycle that rotates through planning, control, and evaluation. As pest issues change over time, the IPM plan adapts.

S412 BMPs for Loading and Unloading Areas for Liquid or Solid Material

Description of Pollutant Sources: Operators typically conduct loading/unloading of liquid and solid materials at industrial and commercial facilities at shipping and receiving, outside storage, fueling areas, etc. Materials transferred can include products, raw materials, intermediate products, waste materials, fuels, scrap metals, etc. Leaks and spills of fuels, oils, powders, organics, heavy metals, salts, acids, alkalis, etc. during transfer may cause stormwater contamination. Spills from hydraulic line breaks are a common problem at loading docks.

Pollutant Control Approach: Cover and contain the loading/unloading area where necessary to prevent run-on of stormwater and runoff of contaminated stormwater.

Final Draft to Ecy

Required Operational BMPs

At All Loading/ Unloading Areas

- A significant amount of debris can accumulate at outside, uncovered loading/unloading areas. Sweep these surfaces frequently to remove loose material that could contaminate stormwater. Sweep areas temporarily covered after removal of the containers, logs, or other material covering the ground.
- Place drip pans, or other appropriate temporary containment device, at locations where leaks or spills may occur such as hose connections, hose reels and filler nozzles. Always use drip pans when making and breaking connections (see Figure 2.2). Check loading/ unloading equipment such as valves, pumps, flanges, and connections regularly for leaks and repair as needed.

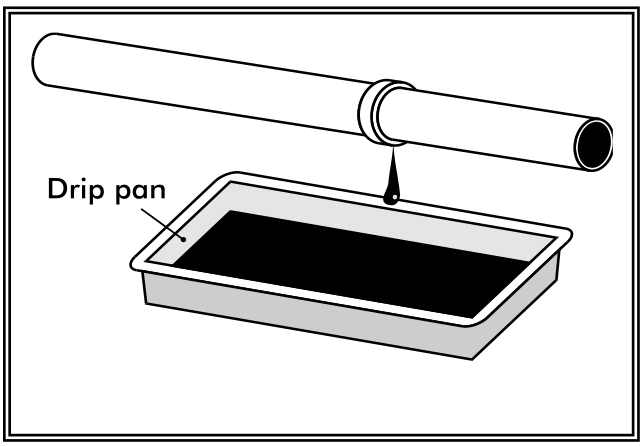

Figure 2.2: Drip Pan

At Tanker Truck and Rail Transfer Areas to Above/Below-ground Storage Tanks

- To minimize the risk of accidental spillage, prepare an "Operations Plan" that describes procedures for loading/unloading. Train the employees, especially fork lift operators, in its execution and post it or otherwise have it readily available to all employees.
- Report spills of reportable quantities to Ecology.
- Prepare and implement an Emergency Spill Cleanup Plan for the facility (See S406 BMPs for Spills of Oil and Hazardous Substances) which includes the following BMPs:
    - Ensure the cleanup of liquid/solid spills in the loading/unloading area immediately, if a significant spill occurs, and, upon completion of the loading/unloading activity, or, at the end of the working day.
    - Retain and maintain an appropriate oil spill cleanup kit on-site for rapid cleanup of material spills. (See S406 BMPs for Spills of Oil and Hazardous Substances.)

- Ensure that an employee trained in spill containment and cleanup is present during loading/unloading.

At Rail Transfer Areas to Above/below-ground Storage Tanks

- Install a drip pan system as illustrated (see Figure 2.3) within the rails to collect spills/leaks from tank cars and hose connections, hose reels, and filler nozzles.

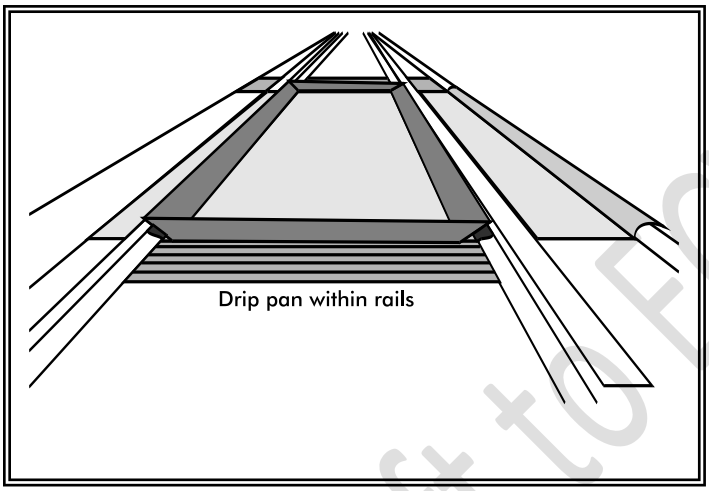

Figure 2.3: Drip Pan Within Rails

Loading/Unloading from/to Marine Vessels

Facilities and procedures for the loading or unloading of petroleum products must comply with Coast Guard requirements specified in the Related Regulations section of the Introduction to the Manual, Coast Guard Requirements for Marine Transfer of Petroleum Products.

Transfer of Small Quantities from Tanks and Containers

Refer to BMPs Storage of Liquids in Permanent Above-Ground Tanks, and Storage of Liquid, Food Waste, or Dangerous Waste Containers, for requirements on the transfer of small quantities from tanks and containers, respectively.

Required Structural Source Control BMPs

At All Loading/ Unloading Areas

- Consistent with Uniform Fire Code requirements (see the Related Regulations section of the Introduction to the Manual, Uniform Fire Code Requirements) and to the extent practicable, conduct unloading or loading of solids and liquids in a manufacturing building, under a roof, or lean-to, or other appropriate cover.
- Berm, dike, and/or slope the loading/unloading area to prevent run-on of stormwater and to prevent the runoff or loss of any spilled material from the area.

Final Draft to Ecy

- Place curbs along the edge of the shoreline, or slope the edge such that the stormwater can flow to an internal storm sewer system that leads to an approved treatment BMP. Avoid draining directly to the surface water from loading areas.
- Pave and slope loading/unloading areas to prevent the pooling of water. Minimize the use of catch basins and drain lines within the interior of the paved area or place catch basins in designated "alleyways" that are not covered by material, containers, or equipment.
- Retain on-site the necessary materials for rapid cleanup of spills.

Recommended Structural Source Control BMP

For the transfer of pollutant liquids in areas that cannot contain a catastrophic spill, install an automatic shutoff system in case of unanticipated off-loading interruption (e.g. coupling break, hose rupture, overfill, etc.).

At Loading and Unloading Docks

- Install/maintain overhangs, or door skirts that enclose the trailer end (see Figures 2.4 and 2.5) to prevent contact with rainwater.
- Design the loading/unloading area with berms, sloping, etc. to prevent the run-on of stormwater.

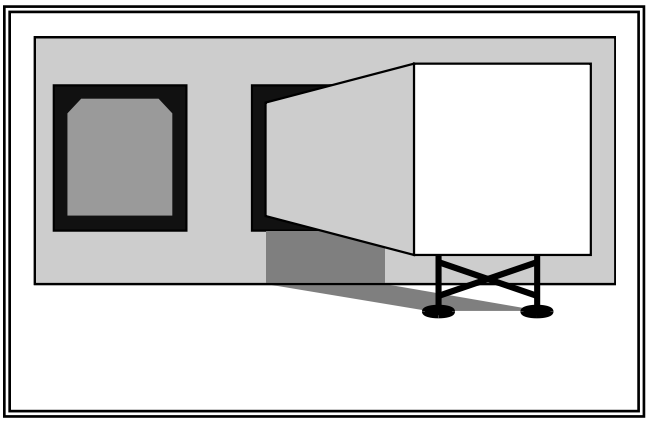

Figure 2.4: Loading Dock with Door Skirt

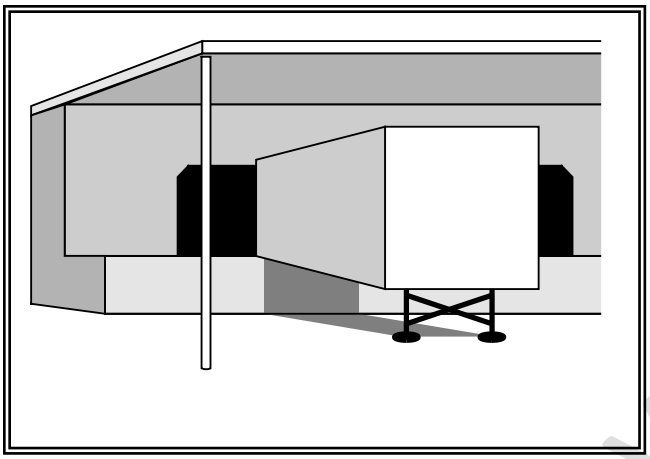

Figure 2.5: Loading Dock with Overhang

At Tanker Truck Transfer Areas to Above/Below-Ground Storage Tanks

- Pave the area on which the transfer takes place. If any transferred liquid, such as gasoline, is reactive with asphalt, pave the area with Portland cement concrete.
- Slope, berm, or dike the transfer area to a dead-end sump, spill containment sump, a spill control oil/water separator, or other spill control device. The minimum spill retention time should be 15 minutes at the greater flow rate of the highest fuel dispenser nozzle through-put rate, or the peak flow rate of the 6-month, 24-hour storm event over the surface of the containment pad, whichever is greater. The capacity of the spill containment sump should be a minimum of 50 gallons with adequate additional volume provided for grit sedimentation.

S413 BMPs for Log Sorting and Handling

Description of Pollutant Sources: Log yards are paved or unpaved areas where logs are transferred, sorted, debarked, cut, and stored to prepare them for shipment or for the production of dimensional lumber, plywood, chips, poles, or other products. Log yards are generally maintained at sawmills, shipping ports, and pulp mills. Typical pollutants include oil and grease, BOD, settleable solids, total suspended solids (including soil), high and low pH, heavy metals, pesticides, wood-based debris, and leachate.

The following are pollutant sources:

- Log storage, rollout, sorting, scaling, and cutting areas
- Log and liquid loading areas
- Log sprinkling
- Debarking, bark bin and conveyor areas
- Bark, ash, sawdust and wood debris piles, and solid wastes

Final Draft to ECY

- Metal salvage areas
- Truck, rail, ship, stacker, and loader access areas
- Log trucks, stackers, loaders, forklifts, and other heavy equipment
- Maintenance shops and parking areas
- Cleaning areas for vehicles, parts, and equipment
- Storage and handling areas for hydraulic oils, lubricants, fuels, paints, liquid wastes, and other liquid materials
- Pesticide usage for log preservation and surface protection
- Application of herbicides for weed control
- Contaminated soil resulting from leaks or spills of fluids

Ecology's Baseline General Permit Requirements

Industries with log yards are required to obtain coverage under the Industrial Stormwater General Permit for discharges of stormwater associated with industrial activities. The permit requires preparation and on-site retention of an Industrial Stormwater Pollution Prevention Plan (SWPPP). Required and recommended operational, structural source control, and treatment BMPs are presented in detail in Ecology's Guidance Document: *Industrial Stormwater General Permit Implementation Manual for Log Yards*, Publication # 04-10-031. Ecology recommends that all log yard facilities obtain a copy of this document.

S414 BMPs for Maintenance and Repair of Vehicles and Equipment

Description of Pollutant Sources: Pollutant sources include parts/vehicle cleaning, spills/leaks of fuel and other liquids, replacement of liquids, outdoor storage of batteries/liquids/parts, and vehicle parking.

Pollutant Control Approach: Control of leaks and spills of fluids using good housekeeping and cover and containment BMPs.

Required Operational BMPs

- Inspect all incoming vehicles, parts, and equipment stored temporarily outside for leaks.
- Use drip pans or containers under parts or vehicles that drip or that are likely to drip liquids, such as during dismantling of liquid containing parts or removal or transfer of liquids.
- Remove batteries and liquids from vehicles and equipment in designated areas designed to prevent stormwater contamination. Store cracked batteries in a covered non-leaking secondary containment system.

- Remove liquids from vehicles retired for scrap.
- Empty oil and fuel filters before disposal. Provide for proper disposal of waste oil and fuel.
- Do not pour/convey washwater, liquid waste, or other pollutants into storm drains or to surface water. Check with the local sanitary sewer authority for approval to convey water to a sanitary sewer.
- Do not connect maintenance and repair shop floor drains to storm drains or to surface water.
- To allow for snowmelt during the winter, install a drainage trench with a sump for particulate collection. Use the drainage trench for draining the snowmelt only and not for discharging any vehicular or shop pollutants.

Required Structural Source Control BMPs

- Conduct all maintenance and repair of vehicles and equipment in a building, or other covered impervious containment area that is sloped to prevent run-on of uncontaminated stormwater and runoff of contaminated water.
- Operators may conduct maintenance of refrigeration engines in refrigerated trailers in the parking area. Exercise due caution to avoid the release of engine or refrigeration fluids to storm drains or surface water.
- Park large mobile equipment, such as log stackers, in a designated contained area.

Additional Required BMPs

- S409 BMPs for Fueling at Dedicated Stations
- S410 BMPs for Illicit Connections to Storm Drains
- S412 BMPs for Loading and Unloading Areas for Liquid or Solid Material
- S426 BMPs for Spills of Oil and Hazardous Substances
- S427 BMPs Storage of Liquid, Food Waste, or Dangerous Waste Containers
- S428 BMPs for Storage of Liquids in Permanent Aboveground Tanks
- S429 BMPs for Storage or Transfer (Outside) of Solid Raw Materials, By-Products, or Finished Products
- S431 BMPs for Washing and Steam Cleaning Vehicle/Equipment/Building Structures

Required Treatment BMPs

Note this required treatment BMP for contaminated stormwater.

- Convey contaminated stormwater runoff from vehicle staging and maintenance areas to a sanitary sewer, if allowed by the local sewer authority, or to an API or CP oil and water separator

Final Draft to Ecy

followed by a basic treatment BMP (See Book 1), applicable filter, or other equivalent oil treatment system.

Recommended Additional Operational BMPs

- Store damaged vehicles inside a building or other covered containment, until successfully removing all liquids.
- Clean parts with aqueous detergent based solutions or non-chlorinated solvents such as kerosene or high flash mineral spirits, and/or use wire brushing or sand blasting whenever practicable. Avoid using toxic liquid cleaners such as methylene chloride, 1,1,1-trichloroethane, trichloroethylene or similar chlorinated solvents. Choose cleaning agents that can be recycled.
- Inspect all BMPs regularly, particularly after a significant storm. Identify and correct deficiencies to ensure that the BMPs are functioning as intended.
- Avoid hosing down work areas. Use dry methods for cleaning leaked fluids.
- Recycle greases, used oil, oil filters, antifreeze, cleaning solutions, automotive batteries, hydraulic fluids, transmission fluids, and engine oils (see Appendix 3-C).
- Do not mix dissimilar or incompatible waste liquids stored for recycling.

S415 BMPs for Maintenance of Public and Private Utility Corridors and Facilities

Description of Pollutant Sources: Passageways and equipment at petroleum product, natural gas, and water pipelines, and electrical power transmission corridors and rights-of-way can be sources of pollutants such as herbicides used for vegetation management, and eroded soil particles from unpaved access roads. At pump stations, waste materials generated during maintenance activities may be temporarily stored outside. Additional potential pollutant sources include the leaching of preservatives from wood utility poles, polychlorinated biphenyl (PCBs) in older transformers, water removed from underground transformer vaults, and leaks/spills from petroleum pipelines. The following are potential pollutants: oil and grease, TSS, BOD, organics, PCBs, pesticides, and heavy metals.

Pollutant Control Approach: Control of fertilizer and pesticide applications, soil erosion, and site debris that can contaminate stormwater.

Required Operational BMPs

- Implement BMPs for Landscaping and Lawn/Vegetation Management and Washington State Department of Agriculture (WSDA) Pesticide Regulations described in the Related Regulations section of the Introduction to the Manual.

- When removing water or sediments from electric transformer vaults, determine the presence of contaminants before disposing of the water and sediments. This includes inspecting for the presence of oil or sheen, and determining from records or testing if the transformers contain PCBs. If records or tests indicate that the sediments or water are contaminated above applicable levels, manage these media in accordance with applicable federal and state regulations, including the federal PCB rules (40 CFR 761) and the state MTCA cleanup regulations (Chapter 173-340 WAC). Water removed from the vaults can be discharged in accordance with the federal 40 CFR 761.79, and state regulations (Chapter 173-201A WAC and Chapter 173-200 WAC), or via the sanitary sewer if the requirements, including applicable permits, for such a discharge are met. (See Stormwater Discharges to Public Sanitary Sewers, Septic Systems, Dead-End Sumps, and Industrial Waste Treatment Systems; and Ecology Requirements for Generators of Dangerous Wastes in the Related Regulations section of the Introduction to the Manual.)
- Within utility corridors, prepare maintenance procedures to minimize the erosion of soil. An implementation schedule may provide for a vegetative, gravel, or equivalent cover that minimizes bare or thinly vegetated ground surfaces within the corridor.
- Provide maintenance practices to prevent stormwater from accumulating and draining across and/or onto roadways. Convey stormwater through roadside ditches and culverts. The road should be crowned, outsloped, water barred, or otherwise left in a condition not conducive to erosion. Appropriately maintaining grassy roadside ditches discharging to surface waters is an effective way of removing some pollutants associated with sediments carried by stormwater.
- Maintain ditches and culverts at an appropriate frequency to ensure that plugging and flooding across the roadbed, with resulting overflow erosion, does not occur.
- Apply the appropriate BMPs in this Book for the storage of waste materials that can contaminate stormwater.

Recommended Operational BMPs

- When selecting utility poles for a specific location, consider the potential environmental effects of the pole or poles during storage, handling, and end-use, as well as its cost, safety, efficacy, and expected life. Use wood products treated with chemical preservatives made in accordance with generally accepted industry standards such as the American Wood Preservers Association Standards. Consider alternative materials or technologies if placing poles in or near an environmentally sensitive area, such as a wetland or a drinking water well. Alternative technologies include poles constructed with material(s) other than wood such as fiberglass composites, metal, or concrete. Consider other technologies and materials, such as sleeves or caissons for wood poles, when they are determined to be practicable and available.
- As soon as practicable remove all litter from wire cutting/replacing operations.
- Implement temporary erosion and sediment control in areas cleared of trees and vegetation and during the construction of new roads.

Final Draft to Ecy

S416 BMPs for Maintenance of Roadside Ditches

Description of Pollutant Sources: Common road debris including eroded soil, oils, vegetative particles, and heavy metals can be sources of stormwater pollutants.

Pollutant Control Approach: Maintain roadside ditches to preserve the condition and capacity for which they were originally constructed, and to minimize bare or thinly vegetated ground surfaces. Maintenance practices should provide for erosion and sediment control (Refer to BMP Landscaping and Lawn/Vegetation Management).

Required Operational BMPs

- Inspect roadside ditches regularly to identify sediment accumulations and localized erosion.
- Clean ditches on a regular basis, as needed. Keep ditches free of rubbish and debris.
- Vegetation in ditches often prevents erosion and cleanses runoff waters. Remove vegetation only when flow is blocked or excess sediments have accumulated. Conduct ditch maintenance (seeding, fertilizer application, harvesting) in late spring and/or early fall, where possible. This allows re-establishment of vegetative cover by the next wet season thereby minimizing erosion of the ditch as well as making the ditch effective as a biofilter.
- The area between the edge of the pavement and the bottom of the ditch is commonly known as the "bare earth zone." Establish grass vegetation from the top of the slope of the ditch next to the bare earth zone.
- Maintain diversion ditches on top of cut slopes constructed to prevent slope erosion by intercepting surface drainage to retain their diversion shape and capability.
- Do not leave ditch cleanings on the roadway surfaces. Sweep, collect, and dispose of dirt and debris remaining on the pavement at the completion of ditch cleaning operations.
- Consider screening roadside ditch cleanings, not contaminated by spills or other releases and not associated with a stormwater treatment system such as a bioswale, to remove litter. Separate screenings into soil and vegetative matter (leaves, grass, needles, branches, etc.) categories. Compost or dispose of the vegetative matter in a municipal waste landfill. Consult with Clark County Public Health to discuss use or disposal options for the soil portion. For more information, please see *Recommendations for Management of Street Wastes*, in Appendix 3-E of this book.
- Roadside ditch cleanings contaminated by spills or other releases known or suspected to contain dangerous waste must be handled following the Dangerous Waste Regulations (Chapter 173-303 WAC). If testing determines materials are not dangerous waste but contaminants are present, consult with Clark County Public Health for disposal options.
- Examine culverts on a regular basis for scour or sedimentation at the inlet and outlet, and repair as necessary. Give priority to those culverts conveying perennial and/or salmon-bearing streams

and culverts near streams in areas of high sediment load, such as those near subdivisions during construction.

Recommended Treatment BMPs

- Install biofiltration swales and filter strips – (See Book 1) to treat roadside runoff wherever practicable and use engineered topsoils wherever necessary to maintain adequate vegetation. These systems can improve infiltration and stormwater pollutant control upstream of roadside ditches.

S417 BMPs for Maintenance of Stormwater Drainage and Treatment Systems

Description of Pollutant Sources: Facilities include roadside catch basins on arterials and within residential areas, conveyance systems, detention facilities such as ponds and vaults, oil/water separators, biofilters, settling basins, infiltration systems, and all other types of stormwater treatment systems presented in Book 1. Oil and grease, hydrocarbons, debris, heavy metals, sediments and contaminated water are found in catch basins, oil and water separators, settling basins, etc.

Pollutant Control Approach: Provide maintenance and cleaning of debris, sediments, and oil from stormwater collection, conveyance, and treatment systems to obtain proper operation.

Required Operational BMPs

Maintain stormwater treatment facilities per the operations and maintenance (O&M) procedures presented in Book 4 in addition to the following BMPs:

- Inspect and clean treatment BMPs, conveyance systems, and catch basins as needed, and determine necessary O&M improvements.
- Promptly repair any deterioration threatening the structural integrity of stormwater facilities. These include replacement of clean-out gates, catch basin lids, and rock in emergency spillways.
- Ensure adequacy of storm sewer capacities and prevent heavy sediment discharges to the sewer system.
- Regularly remove debris and sludge from BMPs used for peak-rate control, treatment, etc. and discharge to a sanitary sewer if approved by the sewer authority, or truck to an appropriate local or state government approved disposal site.
- Clean catch basins when the depth of deposits reaches 60 percent of the sump depth as measured from the bottom of basin to the invert of the lowest pipe into or out of the basin. However, in no case should there be less than six inches clearance from the debris surface to the invert of the lowest pipe. Some catch basins (for example, WSDOT Type 1L basins) may have as little as 12 inches sediment storage below the invert. These catch basins need frequent

Final Draft to ECY

inspection and cleaning to prevent scouring. Where these catch basins are part of a stormwater collection and treatment system, the system owner/operator may choose to concentrate maintenance efforts on downstream control devices as part of a systems approach.

- Clean woody debris in a catch basin as frequently as needed to ensure proper operation of the catchbasin.
- Post warning signs; "Dump No Waste - Drains to Ground Water," "Streams," "Lakes," or emboss on or adjacent to all storm drain inlets *where possible*.
- Disposal of sediments and liquids from the catch basins must comply with "Recommendations for Management of Street Wastes" described in Appendix 3-E of this book.

Additional Required BMPs

Select additional required BMPs from this chapter depending on the pollutant sources and activities conducted at the facility. Those BMPs include:

- S425 BMPs for Soil Erosion and Sediment Control at Industrial Sites
- S427 BMPs for Storage of Liquid, Food Waste, or Dangerous Waste Containers
- S406 BMPs for Spills of Oil and Hazardous Substances
- S410 BMPs for Illicit Connections to Storm Drains
- S430 BMPs for Urban Streets

S418 BMPs for Manufacturing Activities - Outside

Description of Pollutant Sources: Manufacturing pollutant sources include outside process areas, stack emissions, and areas where manufacturing activity has taken place in the past and significant exposed pollutant materials remain.

Pollution Control Approach: Cover and contain outside manufacturing and prevent stormwater run-on and contamination, where feasible.

Required Operational BMPs

- Sweep paved areas regularly, as needed, to prevent contamination of stormwater.
- Alter the activity by eliminating or minimizing the contamination of stormwater.

Required Structural Source Control BMPs

- Enclose the activity (see Figure 2.6): If possible, enclose the manufacturing activity in a building.

- Cover the activity and connect floor drains to a sanitary sewer, if approved by the local sewer authority. Berm or slope the floor as needed to prevent drainage of pollutants to outside areas (Figure 2.7).
- Isolate and segregate pollutants as feasible. Convey the segregated pollutants to a sanitary sewer, process treatment, or a dead-end sump depending on available methods and applicable permit requirements.

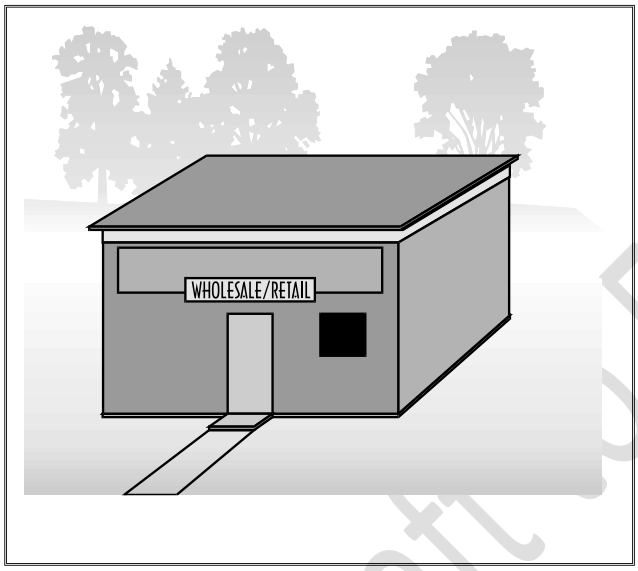

Figure 2.6: Enclose the Activity

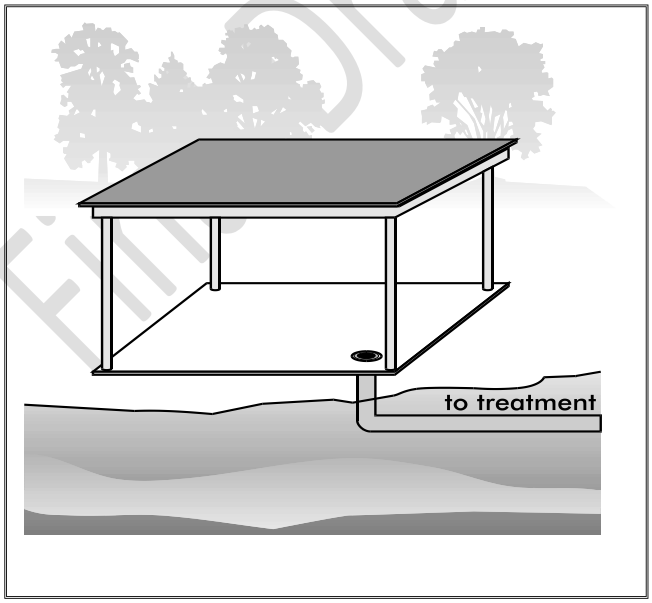

Figure 2.7: Cover the Activity

Final Draft ECY

S419 BMPs for Mobile Fueling of Vehicles and Heavy Equipment

Description of Pollutant Sources: Mobile fueling, also known as fleet fueling, wet fueling, or wet hosing, is the practice of filling fuel tanks of vehicles by tank trucks that are driven to the yards or sites where the vehicles to be fueled are located. Regulators categorize diesel fuel as a Class II Combustible Liquid, whereas they categorize gasoline as a Flammable Liquid.

Historically organizations conducted mobile fueling for off-road vehicles operated for extended periods in remote areas. This includes construction sites, logging operations, and farms. Some organizations conduct mobile fueling of on-road vehicles commercially in the State of Washington.

Note that some local fire departments may have restrictions on mobile fueling practices.

Pollutant Control Approach: Operators typically need proper training of the fueling operators, and the use of spill/drip control and reliable fuel transfer equipment with backup shutoff valving.

Required Operational BMPs

Organizations and individuals conducting mobile fueling operations must implement the bulleted BMPs below. The operating procedures for the driver/operator should be simple, clear, effective, and they should be verified by the organization liable for environmental and third party damage.

- Ensure that the local fire department approves all mobile fueling operations. Comply with local and Washington State fire codes.
- In fueling locations that are in close proximity to sensitive aquifers, designated wetlands, wetland buffers, or other waters of the State, approval by local jurisdictions is necessary to ensure compliance with additional local requirements.
- Ensure compliance with all 49 CFR 178 requirements for DOT 406 cargo tanker. Documentation from a Department of Transportation (DOT) Registered Inspector provides proof of compliance.
- Ensure the presence and the constant observation/monitoring of the driver/operator at the fuel transfer location at all times during fuel transfer and ensure implementation of the following procedures at the fuel transfer locations:
    - Locate the point of fueling at least 25 feet from the nearest storm sewer or inside an impervious containment with a volumetric holding capacity equal to or greater than 110 percent of the fueling tank volume, or covering the storm sewer to ensure no inflow of spilled or leaked fuel. Covers are not required for storm sewers that convey the inflow to a spill control separator approved by Clark County. Potential spill/leak conveyance surfaces must be impervious and in good repair.
    - Place a liquid tight drip pan or an absorbent pad under each fueling location prior to and during all dispensing operations. The pan or the absorbent pad must have a

capacity of at least 5 gallons. There is no need to report spills retained in the drip pan or the pad.

  - Manage the handling and operation of fuel transfer hoses and nozzle, drip pan(s), and absorbent pads as needed to prevent spills/leaks of fuel from reaching the ground, storm sewer, and receiving waters.
  - Avoid extending the fueling hoses across a traffic lane without fluorescent traffic cones, or equivalent devices, conspicuously placed to block all traffic from crossing the fuel hose.
  - Remove the fill nozzle and cease filling the tank when the automatic shut-off valve engages. Do not lock automatic shutoff fueling nozzles in the open position.
  - Do not "top off" the fuel receiving equipment.

- Provide the driver/operator of the fueling vehicle with:
  - Adequate flashlights or other mobile lighting to view fuel fill openings with poor accessibility. Consult with local fire department for additional lighting requirements.
  - Two-way communication with his/her home base.
- Train the driver/operator annually in spill prevention and cleanup measures and emergency procedures. Make all employees aware of the significant liability associated with fuel spills.
- The responsible manager shall properly sign and date the fueling operating procedures, distribute procedures to the operators, retain them in the organization files, and make them available in the event an authorized government agency requests a review.
- Immediately notify the local fire department (911) and the appropriate regional office of the Department of Ecology in the event of any spill entering surface or ground waters. Establish a "call down list" to ensure the rapid and proper notification of management and government officials should any significant amount of product be lost off-site. Keep the list in a protected but readily accessible location in the mobile fueling truck. The "call down list" should also pre-identify spill response contractors available in the area to ensure the rapid removal of significant product spillage into the environment.
- Maintain a minimum of the following spill clean-up materials in all fueling vehicles, that are readily available for use:
  - Non-water absorbents capable of absorbing at least15 gallons of diesel fuel.
  - A storm drain plug or cover kit.
  - A non-water absorbent containment boom of a minimum 10 feet in length with a 12-gallon minimum absorbent capacity.
  - A non-spark generating shovel (a steel shovels could generate a spark and cause an explosion in the right environment around a spill).
  - Two five-gallon buckets with lids.

Final Draft to ECY

- Use automatic shutoff nozzles for dispensing the fuel. Replace automatic shut-off nozzles as recommended by the manufacturer.
- Maintain and replace equipment on fueling vehicles, particularly hoses and nozzles, at established intervals to prevent failures.

Required Structural Source Control BMPs

Include the following fuel transfer site components:

- Automatic fuel transfer shut-off nozzles.
- An adequate lighting system at the filling point.

S420 BMPs for Painting/ Finishing /Coating of Vehicles/Boats/ Buildings/ Equipment

Description of Pollutant Sources: Surface preparation and the application of paints, finishes, and/or coatings to vehicles, boats, buildings, and/or equipment outdoors can be sources of pollutants. Potential pollutants include organic compounds, oils and greases, heavy metals, and suspended solids.

Pollutant Control Approach: Cover and contain painting and sanding operations and apply good housekeeping and preventive maintenance practices to prevent the contamination of stormwater with painting over sprays and grit from sanding.

Required Operational BMPs

- Train employees in the careful application of paints, finishes, and coatings to reduce misuse and over spray. Use drop cloths underneath outdoor painting, scraping, sandblasting work, and properly clean and temporarily store collected debris daily.
- Do not conduct spraying, blasting, or sanding activities over open water or where wind may blow paint into water.
- Wipe up spills with rags and other absorbent materials immediately. Do not hose down the area to a storm sewer, receiving water, or conveyance ditch.
- On marine dock areas sweep rather than hose down debris. Collect any hose water generated and convey to appropriate treatment and disposal.
- Use an effective runoff control device if dust, grit, washwater, or other pollutants may escape the work area and enter a catch basin. The containment device(s) must be in place at the beginning of the workday. Collect contaminated runoff and solids and properly dispose of such wastes before removing the containment device(s) at the end of the workday.

- Use a ground cloth, pail, drum, drip pan, tarpaulin, or other protective device for activities such as outdoor paint mixing and tool cleaning, or where spills can contaminate stormwater.
- Properly dispose of all wastes and prevent all uncontrolled releases to the air, ground, or water.
- Clean brushes and tools covered with non-water-based paints, finishes, or other materials in a manner that allows collection of used solvents (e.g., paint thinner, turpentine, xylol, etc.) for recycling or proper disposal.
- Store toxic materials under cover (tarp, etc.) during precipitation events and when not in use to prevent contact with stormwater.

Required Structural Source Control BMPs

- Enclose and/or contain all work while using a spray gun or conducting sand blasting and in compliance with applicable air pollution control, Occupational Safety and Health Administration (OSHA), and Washington Industrial Safety and Health Act (WISHA) requirements. Do not conduct outside spraying, grit blasting, or sanding activities during windy conditions that render containment ineffective.

Recommended Additional Operational BMPs

- Clean paintbrushes and tools covered with water-based paints in sinks connected to sanitary sewers. Dump pollutants collected in portable containers into a sanitary sewer drain, NOT a stormwater drain.
- Recycle paint, paint thinner, solvents, pressure washwater, and any other recyclable materials.
- Use efficient spray equipment such as electrostatic, air-atomized, high volume/low pressure, or gravity feed spray equipment.
- Purchase recycled paints, paint thinner, solvents, and other products, if feasible.

Final Draft to Ecy

S421 BMPs for Parking and Storage of Vehicles and Equipment

Description of Pollutant Sources: Public and commercial parking lots such as retail store, fleet vehicle (including rent-a-car lots and car dealerships), equipment sale and rental parking lots, and parking lot driveways, can be sources of toxic hydrocarbons and other organic compounds, including oils and greases, metals, and suspended solids.

Pollutant Control Approach: If the parking lot is a *high-use site* as defined below, provide appropriate oil removal equipment for the contaminated stormwater runoff.

Required Operational BMPs

- If washing a parking lot, discharge the washwater to a sanitary sewer, if allowed by the local sewer authority, or other approved wastewater treatment system, or collect washwater for off-site disposal.
- Do not hose down the area to a storm sewer or receiving water. Vacuum sweep parking lots, storage areas, and driveways regularly to collect dirt, waste, and debris.

Required Treatment BMPs

- An oil removal system such as an API or CP oil and water separator, catch basin filter, or equivalent BMP approved by Clark County is necessary for parking lots meeting the threshold vehicle traffic intensity level of a *high-use site*.

Vehicle High-Use Sites

Establishments subject to vehicle high-use intensity are significant sources of oil contamination of stormwater. Examples of potential high use areas include customer parking lots at fast food stores, grocery stores, taverns, restaurants, large shopping malls, discount warehouse stores, quick-lube shops, and banks. If the pollution-generating impervious surface (PGIS) for a high-use site exceeds 5,000 square feet in a threshold discharge area, an oil control BMP from the Oil Control Menu (in Book 1) is necessary. A high-use site at a commercial or industrial establishment has one of the following characteristics: (Gaus/King County, 1994)

- Is subject to an expected average daily vehicle traffic (ADT) count equal to or greater than 100 vehicles per 1,000 square feet of gross building area; or
- Is subject to storage of a fleet of 25 or more diesel vehicles that are over 10 tons gross weight (trucks, buses, trains, heavy equipment, etc.).

S422 BMPs for Railroad Yards

Description of Pollutant Sources: Pollutant sources can include:

- Drips/leaks of vehicle fluids onto the railroad bed
- Human waste disposal
- Litter
- Locomotive/railcar/equipment cleaning areas
- Fueling areas
- Outside material storage areas
- Erosion and loss of soil particles from the railroad bed

- Maintenance and repair activities at railroad terminals
- Switching and maintenance yards
- Herbicides used for vegetation management.

Waste materials can include waste oil, solvents, degreasers, antifreeze solutions, radiator flush, acids, brake fluids, soiled rags, oil filters, sulfuric acid and battery sludges, and machine chips with residual machining oil and toxic fluids/solids lost during transit. Potential pollutants include oil and grease, TSS, BOD, organics, pesticides, and metals.

Pollutant Control Approach: Apply good housekeeping and preventive maintenance practices to control leaks and spills of liquids in railroad yard areas.

Required Operational and Structural Source Control BMPs

- Implement the required BMPs in this chapter depending on the pollutant generating activities/sources at a railroad yard facility.
- Do not allow discharge to outside areas from toilets while a train is in transit. Use pumpout facilities to service these units.
- Use drip pans at hose/pipe connections during liquid transfer and other leak-prone areas.
- During maintenance, do not discard debris or waste liquids along the tracks or in railroad yards.
- Place oil absorbent mats beneath engines when they are parked outdoors.

Required Treatment BMPs

- In areas subjected to leaks/spills of oils or other chemicals, convey stormwater to appropriate treatment such as a sanitary sewer, if approved by the appropriate sewer authority, or, to a CP or API oil/water separator for floating oils, or other treatment, as approved by Clark County.

S423 BMPs for Recyclers and Scrap Yards

Description of Pollutant Sources: Includes businesses that reclaim various materials for resale or for scrap, such as vehicles and vehicle/ equipment parts, construction materials, metals, beverage containers, and papers.

Potential sources of pollutants include paper, plastic, metal scrap debris, engines, transmissions, radiators, batteries, and other materials contaminated or that contain fluids. Other pollutant sources include leachate from metal components, contaminated soil, and the erosion of soil. Activities that can generate pollutants include the transfer, dismantling, and crushing of vehicles and scrap metal; the transfer and removal of fluids; maintenance and cleaning of vehicles, parts, and equipment; and storage of fluids, parts for resale, solid wastes, scrap parts, and materials, equipment and vehicles that contain fluids; generally in uncovered areas.

Final Draft to Ecy

Potential pollutants typically found at vehicle recycle and scrap yards include oil and grease, ethylene and propylene glycol, PCBs, total suspended solids, BOD, heavy metals, and acidic pH.

Required BMPs

For facilities subject to Ecology's Industrial Stormwater General Permit refer to BMP Guidance Document #94-146, *Vehicle Recyclers: A Guide for Implementing the Industrial Stormwater General National Pollutant Discharge Elimination System (NPDES) Permit Requirements*, Washington Department of Ecology, March 2011,website: http://www.ecy.wa.gov/biblio/94146.html. Apply the BMPs in that guidance document to scrap material recycling facilities depending on the pollutant sources existing at those facilities.

S424 BMPs for Roof/ Building Drains at Manufacturing and Commercial Buildings

Description of Pollutant Sources: Stormwater runoff from roofs and sides of manufacturing and commercial buildings can be sources of pollutants caused by leaching of roofing materials, building vents, and other air emission sources. Research has identified vapors and entrained liquid and solid droplets/particles as potential pollutants in roof/building runoff. Metals, solvents, acidic/alkaline pH, BOD, and organics, are some of the pollutant constituents identified.

Ecology has performed a study on zinc in industrial stormwater. The study is presented in Ecology Publication 08-10-025 *Suggested Practices to reduce Zinc Concentrations in Industrial Stormwater Discharges*, website: http://www.ecy.wa.gov/biblio/0810025.html. The user should refer to this document for more details on addressing zinc in stormwater.

Pollutant Control Approach: Evaluate the potential sources of stormwater pollutants and apply source control BMPs where feasible.

Required Operational Source Control BMPs

- If leachates and/or emissions from buildings are suspected sources of stormwater pollutants, then sample and analyze the stormwater draining from the building.
- Sweep the area routinely to remove any zinc residuals.
- If a roof/building stormwater pollutant source is identified, implement appropriate source control measures such as air pollution control equipment, selection of materials, operational changes, material recycle, process changes, etc.

Required Structural Source Control BMPs

- Paint/coat the galvanized surfaces as described in Ecology Publication # 08-10-025.

Required Treatment BMPs

- Treat runoff from roofs to the appropriate level. The facility may use enhanced treatment BMPs as described in Book 1. Some facilities regulated by the Industrial Stormwater General Permit or Clark County may have requirements than cannot be achieved with enhanced treatment BMPs. In these cases, additional treatment measures may be required. A treatment method for meeting stringent requirements such as Chitosan-Enhanced Sand Filtration may be appropriate.

S425 BMPs for Soil Erosion and Sediment Control at Industrial Sites

Description of Pollutant Sources: Industrial activities on soil areas; exposed and disturbed soils; steep grading; etc. can be sources of sediments that can contaminate stormwater runoff.

Pollutant Control Approach: Limit the exposure of erodible soil, stabilize, or cover erodible soil where necessary to prevent erosion, and/or provide treatment for stormwater contaminated with TSS caused by eroded soil.

Required BMPs

Cover Practice Options:

- Vegetative cover such as grass, trees, shrubs, on erodible soil areas.
- Covering with mats such as clear plastic, jute, synthetic fiber.
- Preservation of natural vegetation including grass, trees, shrubs, and vines.

Structural Practice Options:

- Vegetated swale
- Dike
- Silt fence
- Check dam
- Gravel filter berm
- Sedimentation basin
- Proper grading

(For design information refer to the Construction Stormwater Pollution Prevention BMPs in Book 2.)

Final Draft to ECY

S426 BMPs for Spills of Oil and Hazardous Substances

Description of Pollutant Sources: Federal law requires owners or operators of facilities engaged in drilling, producing, gathering, storing, processing, transferring, distributing, refining, or consuming oil and/or oil products to have a Spill Prevention and Emergency Cleanup Plan (SPECP). The SPECP is required if the above ground storage capacity of the facility, is 1,320 gallons or more of oil. Additionally, the SPECP is required if any single container with a capacity in excess of 660 gallons and which, due to their location, could reasonably be expected to discharge oil in harmful quantities, as defined in 40 CFR Part 110, into or upon the navigable waters of the United States or adjoining shorelines {40 CFR 112.1 (b)}. Onshore and offshore facilities, which, due to their location, could not reasonably be expected to discharge oil into or upon the navigable waters of the United States or adjoining shorelines are exempt from these regulations {40 CFR 112.1(1)(i)}. State Law requires owners of businesses that produce dangerous wastes to have a SPECP. These businesses should refer to Washington State/Federal Emergency Spill Cleanup Requirements described in the Related Regulations section of the Introduction to the Manual. The federal definition of oil is oil of any kind or any form, including, but not limited to petroleum, fuel oil, sludge, oil refuse, and oil mixed with wastes other than dredged spoil.

Pollutant Control Approach: Maintain, update, and implement a SPECP.

Required Operational BMPs

The businesses and public agencies identified in Appendix 3-A are required to prepare and implement a Spill Prevention and Emergency Cleanup Plan shall implement the following:

- Prepare a SPECP that includes:
    - A description of the facility including the owner's name and address.
    - The nature of the activity at the facility.
    - The general types of chemicals used or stored at the facility.
    - A site plan showing the location of storage areas for chemicals, the locations of storm drains, the areas draining to them, and the location and description of any devices to stop spills from leaving the site such as positive control valves.
    - Cleanup procedures.
    - Notification procedures used in the event of a spill, such as notifying key personnel. Agencies such as Ecology, local fire department, Washington State Patrol, and the local Sewer Authority, shall be notified.
    - The name of the designated person with overall spill cleanup and notification responsibility.

- Train key personnel in the implementation of the SPECP. Prepare a summary of the plan and post it at appropriate points in the building, identifying the spill cleanup coordinators, location of cleanup kits, and phone numbers of regulatory agencies to contact in the event of a spill.
- Update the SPECP regularly.
- Immediately notify Ecology, Clark County, and the local sewer authority if a spill may reach sanitary or storm sewers, ground water, or surface water, in accordance with federal and Ecology spill reporting requirements.
- Immediately clean up spills. Do not use emulsifiers for cleanup unless there is an appropriate disposal method for the resulting oily wastewater. Do not wash absorbent material down a floor drain or into a storm sewer.
- Locate emergency spill containment and cleanup kit(s) in high-potential spill areas. The contents of the kit shall be appropriate for the type and quantities of chemical liquids stored at the facility.

According to Washington state law, all hazardous material and oil spills must be reported immediately by the spiller. Call the following THREE (3) numbers:

National Response Center: 800-424-8802 (24-hour line)
– AND –
Washington Emergency Management Division: 800-258-5990 –OR– 800-OILS-911 (24-hour line)
– AND –
Ecology Southwest Regional Office: 360-407-6300

Recommended Additional Operational BMP

- Spill kits should include appropriately lined drums, absorbent pads, and granular or powdered materials for neutralizing acids or alkaline liquids where applicable. In fueling areas: Package absorbent material in small bags for easy use and make available small drums for storage of absorbent and/or used absorbent. Deploy spill kits in a manner that allows rapid access and use by employees.

Final Draft to ECY

S427 BMPs for Storage of Liquid, Food Waste, or Dangerous Waste Containers

Description of Pollutant Sources: Steel and plastic drums with volumetric capacities of 55 gallons or less are typically used at industrial facilities for container storage of liquids and powders. The BMPs specified below apply to container(s) located outside a building. Use these BMPs when temporarily storing accumulated food wastes, vegetable or animal grease, used oil, liquid feedstock, cleaning chemicals, or Dangerous Wastes (liquid or solid). These BMPs do not apply when Ecology has permitted the business to store the wastes (see Standards for Solid Waste Containers in the Related Regulations section of the Introduction to the Manual). Leaks and spills of pollutant

materials during handling and storage are the primary sources of pollutants. Oil and grease, acid/alkali pH, BOD, COD are potential pollutant constituents.

Pollutant Control Approach: Store containers in impervious containment under a roof, or other appropriate cover, or in a building. When collection trucks directly pick up roll-containers, ensure a filet is on both sides of the curb to facilitate moving the dumpster. For storage areas on-site for less than 30 days, consider using a portable temporary secondary system like that shown in Figure 2.8 in lieu of a permanent system as described above.

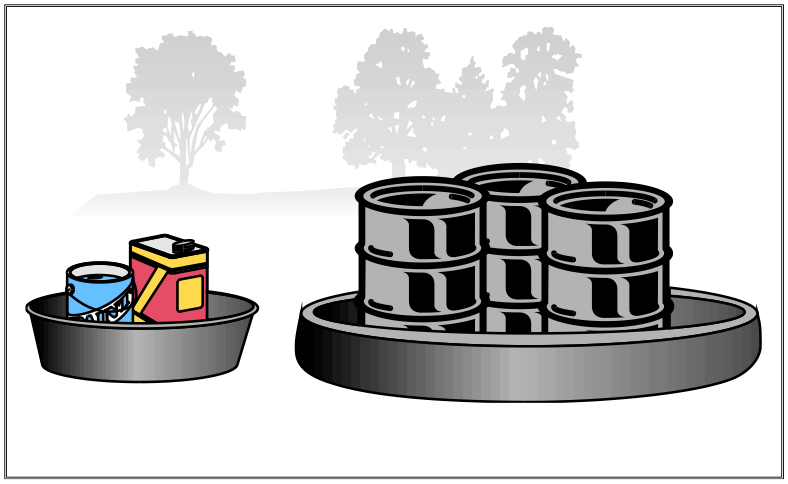

Figure 2.8: Secondary Containment System

Required Operational BMPs

- Place tight-fitting lids on all containers.
- Place drip pans beneath all mounted container taps and at all potential drip and spill locations during filling and unloading of containers.
- Inspect container storage areas regularly for corrosion, structural failure, spills, leaks, overfills, and failure of piping systems. Check containers daily for leaks/spills. Replace containers, and replace and tighten bungs in drums as needed.
- Businesses accumulating Dangerous Wastes that do not contain free liquids need only to store these wastes in a sloped designated area with the containers elevated or otherwise protected from storm water run-on.
- Secure drums when stored in an area where unauthorized persons may gain access in a manner that prevents accidental spillage, pilferage, or any unauthorized use (see Figure 2.9).

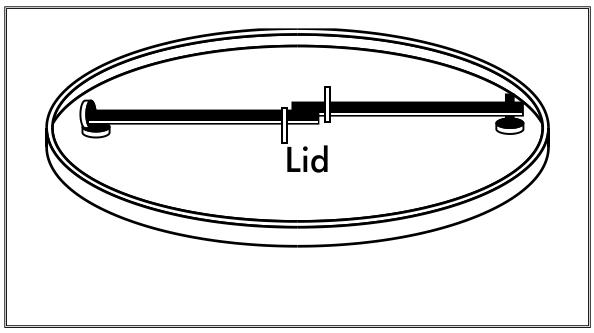

Figure 2.9: Locking System for Drum Lid

- If the material is a Dangerous Waste, the business owner must comply with any additional Ecology requirements as specified in Ecology Requirements for Generators of Dangerous Wastes in the Related Regulations section of the Introduction to the Manual.
- Storage of reactive, ignitable, or flammable liquids must comply with the Uniform Fire Code as described in the Related Regulations section of the Introduction to the Manual.
- Cover dumpsters, or keep them under cover such as a lean-to, to prevent the entry of stormwater. Replace or repair leaking garbage dumpsters.
- Drain dumpsters and/or dumpster pads to sanitary sewer. Keep dumpster lids closed. Install waterproof liners.

Required Structural Source Control BMPs

- Keep containers with Dangerous Waste, food waste, or other potential pollutant liquids inside a building unless this is not feasible due to site constraints or Uniform/International Fire Code requirements.
- Store containers in a designated area, which is covered, bermed or diked, paved and impervious in order to contain leaks and spills (see Figure 2.10). Slope the secondary containment to drain into a dead-end sump for the collection of leaks and small spills.
- For liquid wastes, surround the containers with a dike as illustrated in Figure 2.10. The dike must be of sufficient height to provide a volume of either 10 percent of the total enclosed container volume or 110 percent of the volume contained in the largest container, whichever is greater.

Final Draft to ECY

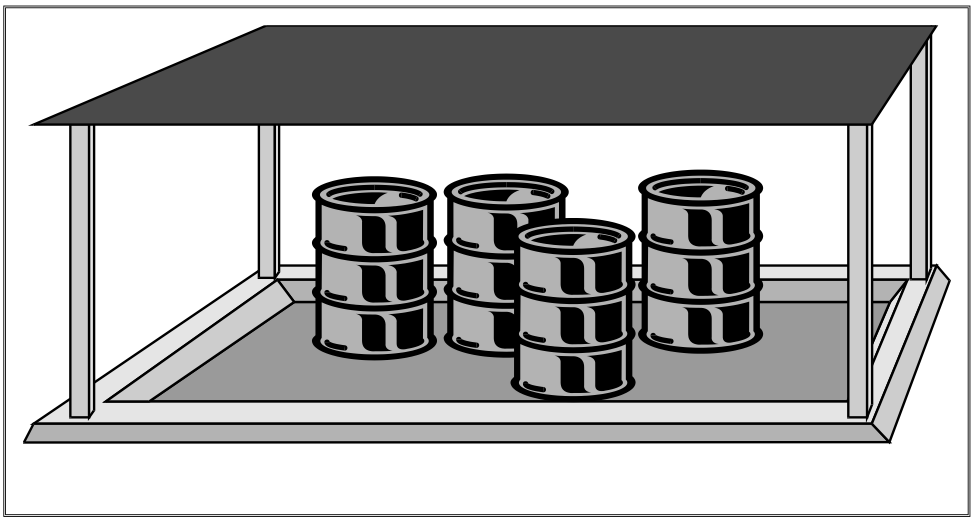

Figure 2.10: Covered and Bermed Containment Area

- Where material is temporarily stored in drums, use a containment system as illustrated, in lieu of the above system (see Figure 2.8).
- Place containers mounted for direct removal of a liquid chemical for use by employees inside a containment area as described above. Use a drip pan during liquid transfer (see Figure 2.11).

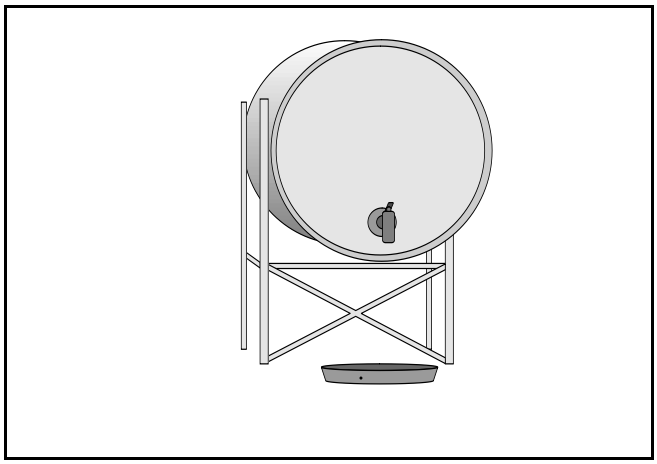

Figure 2.11: Mounted Container - with drip pan

(Note: the secondary containment is not shown in this figure)

Required Treatment BMP

Note this treatment BMP for contaminated stormwater from drum storage areas.

- For contaminated stormwater in the containment area, connect the sump outlet to a sanitary sewer, if approved by the local Sewer Authority, or to appropriate treatment such as an API or CP oil/water separator, catch basin filter or other appropriate system (see Book 1). Equip the sump outlet with a normally closed valve to prevent the release of spilled or leaked liquids, especially flammables (compliance with Fire Codes), and dangerous liquids. Open this valve only for the conveyance of contaminated stormwater to treatment.
- Another option for discharge of contaminated stormwater is to pump it from a dead-end sump or catchment to a tank truck or other appropriate vehicle for off-site treatment and/or disposal.

S428 BMPs for Storage of Liquids in Permanent Aboveground Tanks

Description of Pollutant Sources: Aboveground tanks containing liquids (excluding uncontaminated water) may be equipped with a valved drain, vent, pump, and bottom hose connection. Aboveground tanks may be heated with steam heat exchangers equipped with steam traps, if required. Leaks and spills can occur at connections and during liquid transfer. Oil and grease, organics, acids, alkalis, and heavy metals in tank water and condensate drainage can also cause stormwater contamination at storage tanks.

Pollutant Control Approach: Install secondary containment or a double-walled tank. Slope the containment area to a drain with a sump. Operators may need to discharge stormwater collected in the containment area to treatment such as an API or CP oil/water separator, or equivalent BMP. Add safeguards against accidental releases including protective guards around tanks to protect against vehicle or forklift damage, and tagging valves to reduce human error. *Tank water and condensate discharges are process wastewater that may need an NPDES Permit.*

Required Operational BMPs

- Inspect the tank containment areas regularly for leaks/spills, cracks, corrosion, etc. to identify problem components such as fittings, pipe connections, and valves.
- Place adequately sized drip pans beneath all mounted taps and drip/spill locations during filling/unloading of tanks. Operators may need valved drain tubing in mounted drip pans.
- Vacuum sweep and clean the tank storage area regularly, if paved.
- Replace or repair tanks that are leaking, corroded, or otherwise deteriorating.
- All installations shall comply with the Uniform Fire Code described in the Related Regulations section of the Introduction to the Manual and the National Electric Code.

Final Draft to ECY

Required Structural Source Control BMPs

- Locate permanent tanks in impervious (Portland cement concrete or equivalent) secondary containment surrounded by dikes as illustrated in Figure 2.12, or use UL Approved double-walled tanks. The dike must be of sufficient height to provide a containment volume of either 10 percent of the total enclosed tank volume or 110 percent of the volume contained in the largest tank, whichever is greater.
- Slope the secondary containment to drain to a dead-end sump or equivalent, for the collection of small spills.
- Include a tank overfill protection system to minimize the risk of spillage during loading.

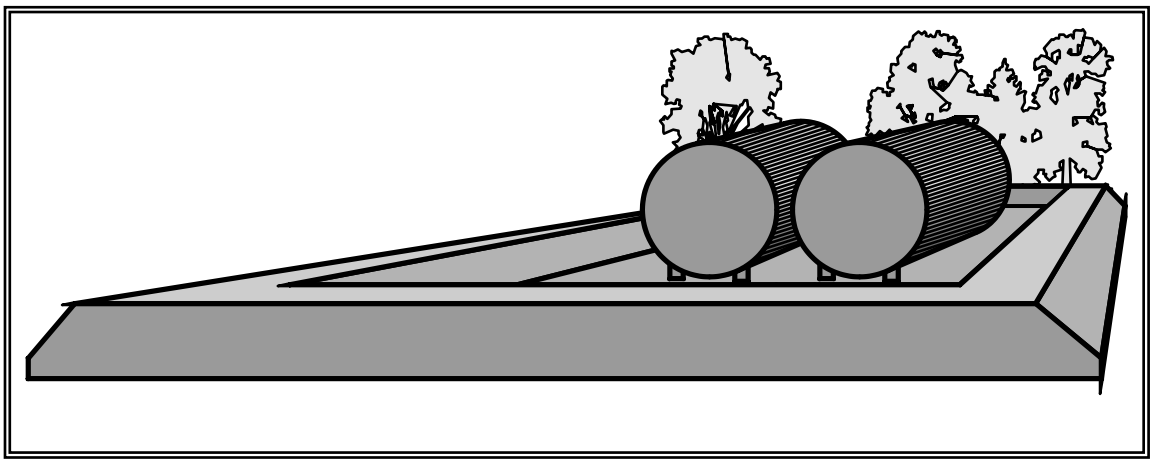

Figure 2.12 – Above-ground Tank Storage

Required Treatment BMPs

Note this applicable treatment BMP for stormwater from petroleum tank farms.

- For an uncovered tank containment area, equip the outlet from the spill-containment sump with a normally closed shutoff valve. Operators may open this valve manually or automatically, only to convey contaminated stormwater to approved treatment or disposal, or to convey uncontaminated stormwater to a storm sewer. Evidence of contamination can include the presence of visible sheen, color, or turbidity in the runoff, or existing or historical operational problems at the facility. Use simple pH tests with litmus or pH paper for areas subject to acid or alkaline contamination.
- At petroleum tank farms, convey stormwater contaminated with floating oil or debris in the contained area through an API or CP-type oil/water separator (Book 1, Treatment BMPs), or other approved treatment prior to discharge to storm drain or surface water.

S429 BMPs for Storage or Transfer (Outside) of Solid Raw Materials, Byproducts, or Finished Products

Description of Pollutant Sources: Some pollutant sources stored outside in large piles, stacks, etc. at commercial or industrial establishments include:

- Solid raw materials
- Byproducts
- Gravel
- Sand
- Salts
- Topsoil
- Compost
- Logs
- Sawdust
- Wood chips
- Lumber
- Concrete
- Metal products

Contact between outside bulk materials and stormwater can cause leachate, and erosion of the stored materials. Contaminants may include TSS, BOD, organics, and dissolved salts (sodium, calcium, and magnesium chloride, etc.).

Pollutant Control Approach: Provide impervious containment with berms, dikes, etc. and/or cover to prevent run-on and discharge of leachate pollutant(s) and TSS.

Required Operational BMP

- Do not hose down the contained stockpile area to a storm drain or a conveyance to a storm drain, or to a receiving water.

Required Structural Source Control BMP Options

The source control BMP options listed below are applicable to:

- Stockpiles greater than 5 cubic yards of erodible or water soluble materials such as:
    - Soil
    - Road deicing salts

Final Draft to ECY

  - Compost
  - Unwashed sand and gravel
  - Sawdust
- Outside storage areas for solid materials such as:
  - Logs
  - Bark
  - Lumber
  - Metal products

Choose one or more of the following Source Controls:

- Store in a building or paved and bermed covered area as shown in Figure 2.13, or;
- Place temporary plastic sheeting (polyethylene, polypropylene, hypalon, or equivalent) over the material as illustrated (see Figure 2.14), or;
- Pave the area and install a stormwater drainage system. Place curbs or berms along the perimeter of the area to prevent the run-on of uncontaminated stormwater and to collect and convey runoff to treatment. Slope the paved area in a manner that minimizes the contact between stormwater (e.g., pooling) and leachable materials in compost, logs, bark, wood chips, etc.
- For large uncovered stockpiles, implement containment practices at the perimeter of the site and at any catch basins as needed to prevent erosion and discharge of the stockpiled material off-site or to a storm drain. Ensure that no direct discharge of contaminated stormwater to catch basins exists without conveying runoff through an appropriate treatment BMP.

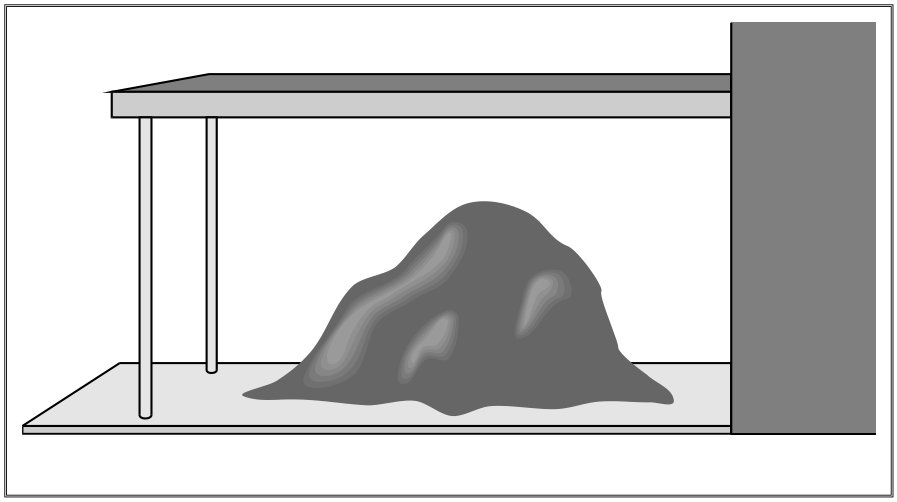

Figure 2.13: Covered Storage Area for Bulk Solids (include berm if needed)

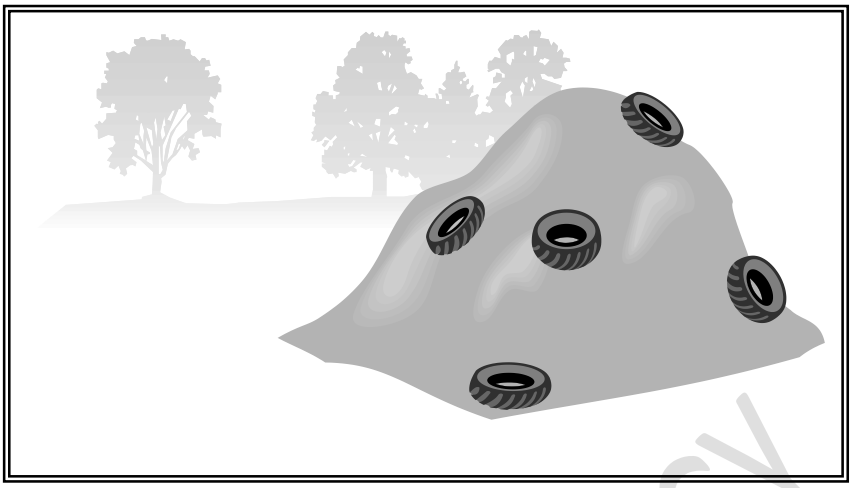

Figure 2.14: Material Covered with Plastic Sheeting

Required Treatment BMP

- Convey contaminated stormwater from the stockpile area to a wet pond, wet vault, settling basin, media filter, or other appropriate treatment system depending on the contamination.

Recommended Additional Operational BMPs

- Maintain drainage areas in and around storage of solid materials with a minimum slope of 1.5 percent to prevent pooling and minimize leachate formation. Areas should be sloped to drain stormwater to the perimeter for collection or to internal drainage "alleyways" where no stockpiled material exists.
- Sweep paved storage areas regularly for collection and disposal of loose solid materials.
- If and when feasible, collect and recycle water-soluble materials (leachates).
- Stock cleanup materials, such as brooms, dustpans, and vacuum sweepers near the storage area.

S430 BMPs for Urban Streets

Description of Pollutant Sources: Urban streets can be the source of vegetative debris, paper, fine dust, vehicle liquids, tire and brake wear residues, heavy metals (lead and zinc), soil particles, ice control salts, domestic wastes, lawn chemicals, and vehicle combustion products. Street surface contaminants contain significant concentrations of particle sizes less than 250 microns (Sartor and Boyd, 1972).

Pollutant Control Approach: Conduct efficient street sweeping where and when appropriate to minimize the contamination of stormwater. Do not wash street debris into storm drains.

Facilities not covered under the Industrial Stormwater General Permit may consider a minimum amount of water washing of streets. All facilities must comply with their local stormwater

Final Draft to ECY

requirements for discharging to storm sewers. Municipal NPDES permittees are required to limit street wash water discharges and may have special conditions or treatment requirements.

Recommended BMPs

- For maximum stormwater pollutant reductions on curbed streets and high volume parking lots, use efficient vacuum sweepers.

  Note: High-efficiency street sweepers utilize strong vacuums and the mechanical action of main and gutter brooms combined with an air filtration system that only returns clean air to the atmosphere (i.e., filters very fine particulates). They sweep dry and use no water since they do not emit any dust.

  High-efficiency vacuum sweepers have the capability of removing, 80 percent or more of the accumulated street dirt particles whose diameters are less than 250 microns (Sutherland, 1998). This assumes pavements under good condition and reasonably expected accumulation conditions.

- For moderate stormwater pollutant reductions on curbed streets use regenerative air sweepers or tandem sweeping operations.

  Note: A tandem sweeping operation involves a single pass of a mechanical sweeper followed immediately by a single pass of a vacuum sweeper or regenerative air sweeper.

  - A regenerative air sweeper blows air down on the pavement to entrain particles and uses a return vacuum to transport the material to the hopper.
  - These operations usually use water to control dust. This reduces their ability to pick up fine particulates.

    These types of sweepers have the capability of removing approximately 25 to 50 percent of the accumulated street dirt particles whose diameters are less than 250 microns. (Sutherland, 1998). This assumes pavements under good conditions and typical accumulation conditions.

- For minimal stormwater pollutant reductions on curbed streets use mechanical sweepers.
  - Note: The industry refers to mechanical sweepers as broom sweepers and uses the mechanical action of main and gutter brooms to throw material on a conveyor belt that transports it to the hopper.
  - These sweepers usually use water to control dust. This reduces their ability to pick up fine particulates.

    Mechanical sweepers have the capability of removing only 10 to 20 percent of the accumulated street dirt particles whose diameters are less than 250 microns (Sutherland, 1998). This assumes pavements under good condition and the most favorable accumulation conditions.

- Conduct vacuum sweeping at optimal frequencies. Optimal frequencies are those scheduled sweeping intervals that produce the most cost-effective annual reduction of pollutants normally found in stormwater and can vary depending on land use, traffic volume and rainfall patterns.
- Train operators in those factors that result in optimal pollutant removal. These factors include sweeper speed, brush adjustment and rotation rate, sweeping pattern, maneuvering around parked vehicles, and interim storage and disposal methods.
- Consider the use of periodic parking restrictions in low to medium density single-family residential areas to ensure the sweeper's ability to sweep along the curb.
- Establish programs for prompt vacuum sweeping, removal, and disposal of debris from special events that will generate higher than normal loadings.
- Disposal of street sweeping solids must comply with "Recommendations for Management of Street Wastes" described in Appendix 3-E of this book.
- Inform citizens about eliminating yard debris, oil and other wastes in street gutters to reduce street pollutant sources.

S431 BMPs for Washing and Steam Cleaning Vehicles/ Equipment/ Building Structures

Description of Pollutant Sources: Pollutant sources include the commercial cleaning of vehicles, aircraft, vessels, and other transportation, restaurant kitchens, carpets, and industrial equipment, and large buildings with low- or high-pressure water or steam. This includes "charity" car washes at gas stations and commercial parking lots. The cleaning can include hand washing, scrubbing, sanding, etc. Washwater from cleaning activities can contain oil and grease, suspended solids, heavy metals, soluble organics, soaps, and detergents that can contaminate stormwater.

Pollutant Control Approach: The preferred approach is to cover and/or contain the cleaning activity, or conduct the activity inside a building, to separate the uncontaminated stormwater from the washwater sources. Convey washwater to a sanitary sewer after approval by the local sewer authority. Provide temporary storage before proper disposal, or recycling. Under this preferred approach, no discharge to the ground, to a storm drain, or to surface water should occur.

The Industrial Stormwater General Permit prohibits the discharge of process wastewater (e.g., vehicle washing wastewater) to ground water or surface water. Stormwater that commingles with process wastewater is considered process wastewater.

Facilities not covered under the Industrial Stormwater General Permit that are unable to follow one of the preferred approaches listed above may discharge washwater to the ground only after proper treatment in accordance with *Ecology guidance WQ-95-056, Vehicle and Equipment Washwater Discharges/Best Management Practices Manual, November 2012 or most recent update.*

Final Draft to ECY

The quality of any discharge to the ground after proper treatment must comply with Ecology's Ground Water Quality Standards, Chapter 173-200 WAC.

Facilities not covered under the Industrial Stormwater General Permit that are unable to comply with one of the preferred approaches and want to discharge to storm sewer, must meet their local stormwater requirements. Local authorities may require treatment prior to discharge.

Contact the local Ecology Regional Office to discuss permitting options for discharge of washwater to surface water or to a storm drain after on-site treatment.

Required Structural Source Control BMPs

Conduct vehicle/ equipment washing in one of the following locations:

- At a commercial washing facility in which the washing occurs in an enclosure and drains to the sanitary sewer, or
- In a building constructed specifically for washing of vehicles and equipment, which drains to a sanitary sewer.

Conduct outside washing operation in a designated wash area with the following features:

- In a paved area, construct a spill containment pad to prevent the run-on of stormwater from adjacent areas. Slope the spill containment area to collect washwater in a containment pad drain system with perimeter drains, trench drains or catchment drains. Size the containment pad to extend out a minimum of four feet on all sides of the washed vehicles and/or equipment.
- Convey the washwater to a sump (like a grit separator) and then to a sanitary sewer (if allowed by the local Sewer Authority), or other appropriate wastewater treatment or recycle system. The containment sump must have a positive control outlet valve for spill control with live containment volume, and oil/water separation. Size the minimum live storage volume to contain the maximum expected daily washwater flow plus the sludge storage volume below the outlet pipe. Shut the outlet valve during the washing cycle to collect the washwater in the sump. The valve should remain shut for at least two hours following the washing operation to allow the oil and solids to separate before discharge to a sanitary sewer.
- Close the inlet valve in the discharge pipe when washing is not occurring, thereby preventing the entry of uncontaminated stormwater into the pretreatment/ treatment system. The stormwater can then drain into the conveyance/discharge system outside of the wash pad (essentially bypassing the sanitary sewer or recycle system). Post signs to inform people of the operation and purpose of the valve. Clean the concrete pad thoroughly until there is no foam or visible sheen in the washwater prior to closing the inlet valve and allowing uncontaminated stormwater to overflow and drain off the pad.

Note that the purpose of the valve is to convey only washwater and contaminated stormwater to a treatment system.

- Collect the washwater from building structures and convey it to appropriate treatment such as a sanitary sewer system if it contains oils, soaps, or detergents. If the washwater does not contain oils, soaps, or detergents (in this case only a low pressure, clean, cold water rinse is allowed) then it could drain to soils that have sufficient natural attenuation capacity for dust and sediment.

Recommended Additional BMPs

- Mark the wash area at gas stations, multi-family residences and any other business where non-employees wash vehicles.
- Operators may use a manually operated positive control valve for uncovered wash pads, but a pneumatic or electric valve system is preferable. The valve may be on a timer circuit and opened upon completion of a wash cycle. After draining the sump or separator, the timer would then close the valve.
- Use phosphate-free biodegradable detergents when practicable.
- Consider recycling the washwater.

Operators may use soluble/emulsifiable detergents in the wash medium and should use it with care and the appropriate treatment. Carefully consider the selection of soaps and detergents and treatment BMPs. Oil/water separators are ineffective in removing emulsified or water soluble detergents. Another treatment appropriate for emulsified and water soluble detergents may be required.

Exceptions

- At gas stations (for charity car washes) or commercial parking lots, where it is not possible to discharge the washwater to a sanitary sewer, a temporary plug or a temporary sump pump can be used at the storm drain to collect the washwater for off-site disposal such as to a nearby sanitary sewer.
- New and used car dealerships may wash vehicles in the parking stalls as long as employees use a temporary plug system to collect the washwater for disposal as stated above, or an approved treatment system for the washwater is in place.

At industrial sites, contact Ecology for NPDES Permit requirements even when not using soaps, detergents, and/or other chemical cleaners in washing trucks.

S432 BMPs for Wood Treatment Areas

Description of Pollutant Sources: Wood treatment includes both anti-staining and wood preserving using pressure processes or by dipping or spraying. Wood preservatives include creosote, creosote/coal tar, pentachlorophenol, copper naphthenate, arsenic trioxide, malathion, or inorganic arsenicals such as chromated copper arsenate, acid copper chromate, chromate zinc chloride, and fluor-chrome-arsenate-phenol. Anti-staining chemical additives include iodo-prophenyl-butyl

Final Draft to ECY

carbamate, dimethyl sulfoxide, didecyl dimethyl ammonium chloride, sodium azide, 8-quinolinol; copper (II) chelate, sodium ortho-phenylphenate, 2-(thiocyanomethylthio)-benzothiazole (TCMTB) and methylene bis- (thiocyanate), and zinc naphthenate.

Pollutant sources include drips of condensate or preservative after pressurized treatment; product washwater (in the treatment or storage areas), spills and leaks from process equipment and preservative tanks, fugitive emissions from vapors in the process, blowouts and emergency pressure releases, and kick-back from lumber (phenomenon where preservative leaks as it returns to normal pressure). Potential pollutants typically include the wood treating chemicals, BOD, suspended solids, oil and grease, benzene, toluene, ethylbenzene, phenol, chlorophenols, nitrophenols, heavy metals, and PAH depending on the chemical additive used.

Pollutant Control Approach: Cover and contain all wood treating areas and prevent all leaching of and stormwater contamination by wood treating chemicals. Wood treating facilities may be covered by the Industrial Stormwater General Permit or by an individual permit. Individual permits covering wood treatment areas include required source control BMPs or require the development of BMPs or a SWPPP. Facilities covered under the Industrial Stormwater General Permit must prepare and implement a SWPPP. When developing a SWPPP or BMPs, wood treating facilities should include the required operational and structural source control BMPs listed below.

Required Operational BMPs

- Use dedicated equipment for treatment activities to prevent the tracking of treatment chemicals to other areas on the site.
- Eliminate non-process traffic on the drip pad. Scrub down non-dedicated lift trucks on the drip pad.
- Immediately remove and properly dispose of soils with visible surface contamination (green soil) to prevent the spread of chemicals to ground water and/or surface water via stormwater runoff.
- Relocate the wood to a concrete chemical containment structure until the surface is clean and until it is drip free and surface dry, if the wood contributes chemicals to the environment in the treated wood storage area.

Recommended Operational BMP

- Consider using preservative chemicals that do not adversely affect receiving surface water and ground water.

Required Structural Source Control BMPs

Cover and/or enclose, and contain with impervious surfaces, all wood treatment areas. Slope and drain areas around dip tanks, spray booths, retorts, and any other process equipment in a manner that allows return of treatment chemicals to the wood treatment process.

- Cover storage areas for freshly treated wood to prevent contact of treated wood products with stormwater. Segregate clean stormwater from process water. Convey all process water to an approved treatment system.
- Seal any holes or cracks in the asphalt areas that are subject to wood treatment chemical contamination.
- Elevate stored, treated wood products to prevent contact with stormwater run-on and runoff
- Place dipped lumber over the dip tank, or on an inclined ramp for a minimum of 30 minutes to allow excess chemical to drip back to the dip tank.
- Place treated lumber from dip tanks or retorts in a covered paved storage area for at least 24 hours before placement in outside storage. Use a longer storage period during cold weather unless the temporary storage building is heated. Prior to moving wood outside, ensure that the wood is drip free and surface dry.

S433 BMPs for Pools, Spas, Hot Tubs, and Fountains

Description of Pollutant Sources: This section includes BMPs for pools, spas, hot tubs, and fountains used for recreational / decorative purposes that use chemicals and/or that are heated. Permittees that use pools, spas, hot tubs, and fountains as part of an industrial process should refer to their Industrial Stormwater Permit.

Discharge from pools, spas, hot tubs, and fountains can degrade ambient water quality. The waters from these sources typically contain bacteria that contaminate the receiving waters. Chemicals lethal to aquatic life such as chlorine, bromine and algaecides can be found in pools, spas, hot tubs, and fountains. These waters may be at an elevated temperature and can have negative effects on receiving waters and to aquatic life. Diatomaceous earth backwash from swimming pool filters can clog gills and suffocate fish.

Routine maintenance activities generate a variety of wastes. Chlorinated water, backwash residues, algaecides, and acid washes are a few examples. Direct disposal of these waters to storm drain systems and waters of the State is not permitted without prior treatment and approval.

The quality of any discharge to the ground after proper treatment must comply with Ecology's Ground Water Quality Standards, Chapter 173-200 WAC.

The Washington State Department of Health and local health authorities regulate Water Recreation facilities which include pools, spas, and hot tubs. Owners and operators of those facilities must comply with those regulations, policies and procedures. Following the guidelines here does not exempt or supersede any requirements of the regulatory authorities.

Pollutant Control Approach: Many manufacturers do not recommend draining pools, spas, hot tubs or fountains; refer to the facility's operation and maintenance manual. If the water feature must

Final Draft to ECY

be drained, convey discharges (within hoses or pipes) to a sanitary sewer if approved by the local sewer authority or to a storm sewer following the conditions outlined below. Do not discharge to a septic system, since it may cause the system to fail. No discharge to the ground, or to surface water should occur, unless permitted by the proper regulatory authority.

Required Operational BMPs

- Clean the pool, spa, hot tub, or fountain regularly, maintain proper chlorine levels and maintain water filtration and circulation. Doing so will limit the need to drain the facility.
- Manage pH and water hardness to reduce copper pipe corrosion that can stain the facility and pollute receiving waters.
- Before using copper algaecides, try less toxic alternatives. Only use copper algaecides if the others alternative do not work. Ask a pool/spa/hot tub/fountain maintenance service or store for help resolving persistent algae problems without using copper algaecides.
- Develop and regularly update a facility maintenance plan that follows all discharge requirements.
- Dispose of unwanted chemicals properly. Many of them are hazardous wastes when discarded.
- Discharge waters originating from a pool/spa/hot tub/fountain to a sanitary sewer, if approved by the local sewer authority, local health authority or both. Do not discharge waters containing copper-based algaecides may to storm sewer systems.
- Do not discharge water directly from a pool, spa, hot tub, fountain, process wastes or wastewaters into storm drains except if the discharge water is:
    - Dechlorinated/debrominated to 0.1 ppm or less. (Some guidance on dechlorination is provided in the Department of Health's Water System Design Manual, Revised 12/09, DOH Publication 331-123. The Department of Health manual further references AWWA. 1999b. C651 - AWWA Standard for Disinfecting Water Mains. American Water Works Association, Denver, CO. and AWWA. 2002. C652 - AWWA Standard for Disinfecting Water Storage Facilities. American Water Works Association, Denver, CO. for more details.) Contact a pool chemical supplier to obtain the neutralizing chemicals needed.
    - pH-adjusted.
    - Reoxygenated, if necessary.
    - Free of any coloration, dirt, suds, or algae.
    - Free of any filter media.
    - Free of acid cleaning wastes.
    - At a temperature that will prevent an increase in temperature in the receiving water. Cool heated water prior to discharge.

    - Released at a rate that can be accommodated by the receiving body (i.e. can infiltrate or be safely conveyed).

- Swimming pool cleaning wastewater and filter backwash shall not be discharged to the storm sewer.
- Bag diatomaceous earth (pool filtering agent) and dispose at a landfill.

Required Structural Source Control BMPs

- Ensure that the pool/spa/hot tub/fountain system is free of leaks and operates within the design parameters.
- Do not provide any permanent links to storm drain systems. All connections should be visible and carefully controlled.
- If the dechlorination or cooling process selected requires the water to be stored for a time, it should be contained within the pool or appropriate temporary storage container.

Final Draft to ECY

Chapter 3 BMPs for Residential Properties

Residential properties in our community contribute to stormwater quality. How residents care for their properties through tasks such as yard maintenance, waste storage, car washing and maintenance can adversely impact water quality. Many residents may not realize that the storm drains in our community may not have treatment features that remove pollutants from the water prior to discharging to creeks, streams and rivers.

Residents can apply Best Management Practices (BMPs) to their properties to keep stormwater from becoming polluted in the first place. Clark County is required to educate community members about these best management practices and how to play a role in protecting the creeks, streams and rivers in our community as well as our water contribution to the Columbia River.

A full list of BMPs and information is available on our website at www.clarkgreenneighbors.org. Click on the Resources tab at the top of the page and scroll down to Clean Water for more information and ideas about how to keep stormwater from residential properties from adversely affecting our waterways.

If you see a spill of materials into a storm drain or stormwater facility that may impact water quality, residents are encouraged to call **Washington Department of Ecology 24-hour Surface Water Quality and Spill Complaint line: (800) 258-5990. Citizens can receive more information from the Clark County "Report a Spill" web page at** http://www.clark.wa.gov/environment/stormwater/report.html**.**

A general list of BMPs for homeowners includes:

- Automobile Washing
- Automobile Maintenance
- Household Hazardous Material Use, Storage, and Disposal
- Yard Maintenance and Gardening
- Pet Waste
- Swimming Pool and Spa Maintenance
- General Home Maintenance

Automobile Washing (for Single-Family Residences)

Car washing at home may cause washwater to enter the storm drains and flow untreated into surface waters. Soaps and detergents, even the biodegradable ones, can have immediate and long-term effects.

DRAFT

Suggested BMPs

- Engine degreasing or washing of internal engine components should not be completed at home. Take car to a commercial car wash that allows engine washing.
- The safest option to protect waterways is to take cars to a commercial car wash that discharges wastewater to the sanitary system for treatment.
- Minimize the impact of wash water to stormwater facilities by following the practices listed below.

At Home

- Wash cars directly over lawn areas or make sure the wash water drains to a vegetated area.
- Only use soaps or detergents without phosphates.
- Consider using commercial products that allow cleaning a vehicle without water.
- Use a hose nozzle with a shut-off valve to save water.
- Do not wash cars if rain is expected.
- Pour the bucket of soapy, dirty washwater down your sink to a sanitary sewer connection.

Away from Home

- For fundraising car washes, follow the same BMP principles listed above.
- For fundraising car washes, block storm drains and redirect runoff to vegetated areas or sanitary sewer connection. Refer to Clark County's web site to develop a safe river car wash kit for fundraising events to minimize pollutants from entering storm drains and waterways.

Automobile Maintenance

Fluids and materials leaking from automobiles can contribute a significant amount of pollution to stormwater runoff. If materials are left on hard surfaces, rainwater can then wash materials down storm drains. Proper maintenance and repairs of vehicles can minimize the pollution risk.

Suggested BMPs

- Never dump new or used automotive fluids or solvents on the ground, in a storm drain or street gutter, or in a waterbody.
- Recycle all oils, antifreeze, solvents, and batteries per the Clark County Recycling Directory A-Z.
- Do not mix wastes. Always keep your wastes in properly-labeled separate containers and store them under cover.

Final Draft to ECY

- Household Hazardous Waste cannot be disposed of with regular garbage. Refer to the Recycling Directory or contact your local waste hauler for details of how to properly dispose of your household hazardous waste.
- Fix all leaks to ensure materials stay off the streets and out of the stormwater system and local waterways.
- A tarp, ground cloth, sheet of cardboard, drip pans, or other materials to contain drips must be used beneath the vehicle or equipment to capture all spills and drips. Keep a bag of kitty litter on hand to absorb any spills. Sprinkle a layer on the spill, let it absorb and sweep it up. Dispose of the contaminated litter in the regular garbage in a tied plastic bag. Do not leave kitty litter out in the rain.
- If body work is performed outside, be sure to use a tarp to catch material resulting from grinding, sanding, and painting. Dispose of this waste by double bagging in plastic and placing in garbage.

Household Hazardous Material Use, Storage, and Disposal

There are numerous hazardous materials typically used in a residential setting such as oil-based paints, stains, paint thinner, gasoline, charcoal starter fluid, cleaners, waxes, pesticides, fingernail polish remover, and wood preservatives. When hazardous materials leak or are dumped on the ground or in a storm drain, they can be washed directly to storm drains and streams. These pollutants can harm fish and wildlife that use the waterways. Serious environmental harm may result if improper methods of storage, usage, and disposal are employed.

Suggested BMPs

- Dispose of hazardous materials and their containers properly. Never dump products labeled as poisonous, corrosive, caustic, flammable, inflammable, volatile, explosive danger, warning, caution, or dangerous outdoors, in a storm drain or stormwater facility.
- Store containers of hazardous materials under cover and off the ground. Keep them out of the weather to avoid rusting, freezing, cracking, labels being washed off, etc.
- Check hazardous material containers frequently for signs of leakage. If a container is rusty and has the potential of leaking soon, place it in a secondary container before the leak occurs to prevent a clean-up problem.
- Keep appropriate spill cleanup materials on hand. Kitty litter is good for many oil-based spills.
- Ground cloths and drip pans should be used under any work outdoors that involves hazardous materials such as oil-based paints, stains, rust removers, masonry cleaners, and other supplies bearing label warnings as outlined above.
- When hazardous materials are in use, place the container inside a tub or bucket to minimize spills.

DRAFT

Yard Maintenance and Gardening

This section deals with the normal yard maintenance activities typically performed on residential properties. Overwatering, overfertilizing, improper herbicide application, and improper disposal of trimmings and clippings can all contribute to serious water pollution problems. The Clark County Naturally Beautiful Backyards program and the Washington State University Extension office have extensive information on caring for properties while minimizing potential stormwater runoff and pollutants.

Suggested BMPs

- Follow the manufacturer's directions exactly for mixing and applying herbicides, fungicides, and pesticides. Do not apply when it is windy or when rain is expected. Do not apply over water or within 100 feet of a well-head. Use caution and follow manufacturer's directions when applying chemicals adjacent to streams, wetlands, or other bodies of water. Triple-rinse empty containers, using the rinse for mixing the next batch of spray, and then dispose of the empty container in your regular garbage.
- Never dispose of grass clippings or other vegetation in or near storm drains, stormwater facilities or rivers. Review Clark County's website for Grass-cycling information to minimize waste and protect water quality.
- Make sure all fertilizers and pesticides are stored in a covered location.
- Use natural, organic soil amendments and products whenever possible. Consult your local garden center for products that may be applicable based on your soil type and landscape needs.
- Save water and prevent pollution problems by avoiding overwatering lawns. Lawns and gardens typically need the equivalent of 1-inch of rainfall per week. Watering to the point where the water runs off the lawn surface is called overwatering, and the practice can carry polluting nutrients to the nearest storm drain.
- Consider planting a vegetated buffer zone adjacent to streams or other water bodies as well as reducing lawn areas that require higher maintenance.

Final Draft to Ecy

Pet Waste

Pets and pet-care can generate pollutants from waste, animal washing, and cage or kennel cleaning. Pollutants include bacteria, which can pollute waterways. With over 11,000 pets in our community, every effort to minimize pollution waste can add up. Clark County's Canines for Clean Water campaign provides a list of key information for pet owners to help protect stormwater runoff. Pet owners can also take a pledge to commit to picking up pet waste in their yards as well as when out for walks. Visit http://www.clark.wa.gov/environment/stormwater/canines/index.html for information.

Suggested BMPs

- Regularly scoop, sweep and clean up pet waste deposited on walks and at home. Dispose of pet waste in the garbage. Kitty litter should be disposed of properly with garbage.
- When cleaning out cages and kennels, wash directly over lawn areas or make sure the wash water drains to a vegetated area. Alternately, dispose of the wash water down the toilet or a mop sink.
- Do not dispose of unused pet pharmaceuticals in a storm drain, in a toilet, or down a sink. Check the Clark County Recycling Directory for proper disposal locations of pet medications.

Swimming Pool and Spa Cleaning and Maintenance

The water from pools and spas is considered wastewater and should not be dumped down a storm drain. The nutrients, pH, and chlorine can adversely affect fish and wildlife in creeks, streams and rivers.

Suggested BMPs

- Swimming pool wastewater and filter backwash shall not be discharged to the storm drain or stormwater facility.
- Pool and spa water must be dechlorinated if it is to be emptied into a ditch, on the ground or a lawn, or to the storm drainage system. The discharges shall be dechlorinated to a concentration of 0.1 ppm or less, pH-adjusted and reoxygenated if necessary, and volumetrically and velocity controlled to prevent resuspension of sediments in the stormwater system. The rate of flow into the ditch or drainage system must be moderated so that it does not cause problems such as erosion, surcharging, or flooding.
- If pool and spa water cannot be dechlorinated, it must be discharged to the sanitary sewer.
- Hire a professional pool service company to collect pool water for proper disposal if a proper disposal on site is not available. Make sure to ask where the water will be disposed of and ensure the proper permits have been obtained.

General Home Maintenance

A number of normal maintenance activities typically performed in residential settings can be modified to reduce the risk of stormwater pollution.

Suggested BMPs

- Pressure washing of building facades, rooftops, driveways, sidewalks and patios should be conducted in a manner that minimizes runoff and pollutants leaving the property. Temporary curbs, dikes, or berms may be used to direct water away from storm drains or stormwater

DRAFT

facilities. Water should be directed to the sanitary system or to an area where it can infiltrate in a landscape bed or evaporate. Debris generated from pressure washing should be swept up and disposed of properly.

- Carpet cleaning wash water should be disposed of to a sanitary sewer facility. It is preferred that the dirty wash water be discharged into a toilet or mop sink at the place where it was generated.
- Do not clean brushes or tools where the wastewater can enter a storm drain or stormwater facility. Clean brushes and tools coated with non-water-based paints, finishes, or other materials in a manner that allows collection of used solvents (e.g. paint thinner, turpentine, xylol, etc.) for proper disposal at a Household Hazardous Waste Facility. Refer to the Clark County Recycling Directory for locations based on the materials used.
- Regularly sweep the property curbs along the street to minimize debris and litter that can clog storm drains and carry pollutants to the drains. Properly dispose of waste that is collected. Do not sweep leaves and clippings into the street.

Final Draft to ECY

Book 3 References

CH2M Hill, Comments on Washington State Department of Ecology Draft Publication 99-11 through 99-15, Soil Improvement Project Engineering Report for Snohomish County, February 2000.

Daar, Olkowski & Olkowski, IPM Training Manual for Gardeners, 1992.

Daar, Sheila, Least Toxic Pest Management for Lawns, Integral Resource Center, Berkeley, CA 94707; 1992.

Field, Richard and Pitt, Robert, E., et. al., Urban Wet-weather Flows, Water Environment Research Literature Review, 1997.

Gaus, J., High Use/Oil Control Decision Paper-Second Draft, King County Surface Water Management, 1994.

King County Surface Water Management, Best Management Practices for Businesses, July 1995.

Olkowski, William, Helga Olkowski and Sheila Daar, What is IPM? In Common Sense Pest Control, Volume 3, summer 1988.

Perry, George et al, A Comprehensive IPM Program, King County Local Hazardous Waste Management Program, November 7, 2000.

Pierce County Stormwater Management and Site Development Manual, Volume IV Source Control, March 1, 2009.

Pitt, Robert, Urban Stormwater Toxic Pollutants: Assessment, Sources, and Treatability, Water Environment Research, May/June 1995.

Sartor, J.D. and B.G. Boyd, Water Pollution Aspects of Street Surface Contaminants, EPA-R2-72-081, November 1972, P.7.

Schueler, Thomas, R., Comparative Pollutant Removal Capability of Urban BMPs: A Reanalysis, Watershed Protection Techniques, June 1997.

Silverman, Gary S. and Michael K. Stenstrom, Source Control of Oil and Grease in an Urban Area, in Design of Urban Runoff Quality Controls, ASCE, 1988.

Standard Industrial Classification Manual, Office of Management and Budget, 1987.

DRAFT

Strecker, Eric, W., et. al., Analysis of Oregon Urban Runoff Water Quality Monitoring Data Collected from 1990 to 1996, The Oregon Association of Clean Water Agencies, February 1997 Draft.

Sutherland, Roger, High Efficiency Sweeping as an Alternative to the Use of Wet Vaults for Stormwater Treatment, 1998.

U.S. Environmental Protection Agency, Innovative Uses of Compost: Disease Control for Plants and Animals Fact Sheet, publication 530-F-97-044, October 1997.

U.S. Environmental Protection Agency, Multi-sector Stormwater Permit and Fact Sheet, September 1995.

U.S. Environmental Protection Agency, Results of the Nationwide Urban Runoff Program, December 1983.

Washington State Department of Ecology, Focus on Emergency Spill Response, publication 97-1165-CP, 2013.

Washington State Department of Ecology, Implementation Guidance for the Ground Water Quality Standards, publication 96-02, 1996.

Washington State Department of Ecology, NPDES and State Waste Discharge Baseline General Permit for Stormwater Discharge Associated with Industrial Activities, November 18, 1995.

Washington State Department of Ecology, Techniques for Dust Prevention and Suppression, publication #96-433, 1996.

Final Draft to ECY

Book 3 Appendices

Final Draft to ECY

Final Draft to ECY

Urban Land Uses and Pollutant Generating Sources

Use this appendix to identify pollutant-generating sources at various land uses (manufacturing, transportation, communication, wholesale, retail, service - based on the 1987 Standard Industrial Classification codes (OMB, 1987), and public agencies). Required operational and structural source control and treatment BMPs for each pollutant source can then be selected by referring to Chapter 2 of this Book. Other land uses not included in this appendix should also consider implementing required (mandatory) BMPs for their pollutant sources.

A.1 Manufacturing Businesses

Cement
SIC: 3241

Description: These businesses produce Portland cement, the binder used in concrete for paving, buildings, pipe, and other structural products. The three basic steps in cement manufacturing are: 1) proportioning, grinding, and blending raw materials; 2) heating raw materials to produce a hard, stony substance known as clinker; and 3) combining the clinker with other materials and grinding the mixture into a fine powdery form. The raw materials include limestone, silica, alumina, iron, chalk, oyster shell marl, or shale. Waste materials from other industries are often used such as slag, fly ash and spent blasting sand. Raw materials are crushed, mixed and heated in a kiln to produce the correct chemical composition. Kilns typically are coal, gas, or oil fired. The output of the kiln is a clinker that is ground to produce the final product.

The basic process may be wet or dry. In the wet process water is mixed with the raw ingredients in the initial crushing operation and in some cases is used to wash the material prior to use. Water may also be used in the air pollution control scrubber. The most significant waste material from cement production is the kiln dust. Concrete products may also be produced at ready-mix concrete facilities. Refer to “Concrete Products” for a description of the BMPs appropriate to these activities.

Potential Pollutant Generating Sources*:* Stormwater may be contaminated during the crushing, grinding, storage, and handling of kiln dust, limestone, shale, clay, coal, clinker, gypsum, anhydrite, slag, sand, and product and at the vehicle and equipment maintenance, fueling, and cleaning areas. Total suspended solids, aluminum, iron and other heavy metals, pH, COD, potassium, sulfate, and oil and grease are some of the potential pollutants. The following mean concentrations in stormwater discharges have been reported Environmental Protection Agency (EPA’s) multi-sector permit fact sheet (EPA, 1995): TSS=1067, COD=107.5, aluminum=72.6, iron=7.5, all in mg/L, and pH=2-12. These values may be

Final Draft 6.30.14

useful in characterizing stormwater contaminants at cement manufacturing facilities.

Chemicals Manufacturing
SIC: 2800, 3861

Description: This group is engaged in the manufacture of chemicals, or products based on chemicals such as acids, alkalis, inks , chlorine, industrial gases, pigments, chemicals used in the production of synthetic resins, fibers and plastics, synthetic rubber, soaps and cleaners, pharmaceuticals, cosmetics, paints, varnishes, resins, photographic materials, chemicals, organic chemicals, agricultural chemicals, adhesives, sealants, and ink .

Potential Pollutant Generating Sources: Activities that can contaminate stormwater include bagging, blending, packaging, crushing, milling, shredding, granulation, grinding, storage, distribution, loading/unloading, and processing of materials; equipment storage; application of fertilizers; foundries; lime application; use of machinery; material handling and warehousing; cooling towers; fueling; boilers; dangerous waste treatment, storage and disposal; wastewater treatment; plant yard areas of past industrial activity; access roads and tracks; drum washing, and maintenance and repair.

Chemical businesses in the Seattle area surveyed for dangerous wastes have been found to produce waste caustic solutions, soaps, heavy metal solutions, inorganic and organic chemicals, solvents, acids, alkalis, paints, varnishes, pharmaceuticals, and inks. The potential pollutants include BOD, TSS, COD, oil and grease, pH, total phosphorus, nitrates, nitrites, total Kjeldahl nitrogen, ammonia, specific organics, and heavy metals. EPA stormwater multi-sector permit fact sheet data [(7)] includes the following mean values in mg/L except pH: BOD, 4.4-143.2; TSS, 35-493; COD, 42.36-245.3; Oil and Grease, 0.3-6.0; NO2+NO3, 0.3-35.9; TKN, 1.3-108.9; tot. P, 0.1-65.7; ammonia, 40.45-73.22; Al, 1.20-1.78; Cu, .12-19; Mn, .56-. 71; Zn, 1.74-2.11; Fe, 2.24-3.52 and pH, 3.5-10.4. This data could be helpful in characterizing stormwater pollutants at the facility.

Concrete Products
SIC: 3270

Description: Businesses that manufacture ready-mix concrete, gypsum products, concrete blocks and bricks, concrete sewer or drainage pipe, septic tanks, and prestressed concrete building components. Concrete is prepared on-site and poured into molds or forms to produce the desired product. The basic ingredients of concrete are sand, gravel, Portland cement, crushed stone, clay, and reinforcing steel for some products. Admixtures including fly ash, calcium chloride, triethanolamine, lignosulfonic acid, sulfonated hydrocarbon, fatty acid glyceride, or vinyl acetate, which may be added to obtain desired characteristics such as slower or more rapid curing times.

Final Draft to BOY

The first stage in the manufacturing process is proportioning cement, aggregate, admixtures and water, and then transporting the product to a rotary drum, or pan mixer. The mixture is then fed into an automatic block-molding machine that rams, presses, or vibrates the mixture into its final form. The final product is then stacked on iron framework cars where it cures in four hours. After being mixed in a central mixer, concrete is molded in the same manner as concrete block. The concrete cures in the forms for a number of hours. Forms are washed for reuse, and the concrete products are stored until they can be shipped.

Potential Pollutant Generating Sources: Pollutant generating activities/sources include stockpiles; washing of waste concrete from trucks, forms, equipment, and the general work area; and water from the curing of concrete products. Besides the basic ingredients for making concrete products, chemicals used in the curing of concrete and the removal of forms may end up in stormwater. These chemicals can include latex sealants, bitumastic coatings and release agents. Trucks and equipment maintained on-site may generate waste oil and solvents, and other waste materials. Potential pollutants include TSS, COD, BOD, pH, lead, iron, zinc, and oil and grease.

Electrical Products

SIC: 3600, 3800

Description: A variety of products are produced including electrical transformers and switchgear, motors, generators, relays, and industrial controls; communications equipment for radio and TV stations and systems; electronic components and accessories including semiconductors; printed board circuits; electromedical and electrotherapeutic apparatus; and electrical instrumentation. Manufacturing processes include electroplating, machining, fabricating, etching, sawing, grinding, welding, and parts cleaning. Materials used include metals, ceramics, quartz, silicon, inorganic oxides, acids, alkaline solutions, arsenides, phosphides, cyanides, oils, fuels, solvents, and other chemicals.

Potential Pollutant Generating Sources: Pollutant generating activities/sources include bulk storage of raw materials, by-products or finished products; loading and unloading of liquid materials from truck or rail; temporary storage of waste oil and solvents from cleaning manufacturing equipment; used equipment temporarily stored on site that could drip oil and residual process materials; maintenance and repair of vehicles and equipment; and temporary storage of Dangerous Wastes.

Waste liquids which are sometimes stored outside include spent acetone and solvents, ferric chloride solutions, soldering fluxes mixed with thinner or alcohol, spent acids, and oily waste. Several of these liquid wastes contain chlorinated hydrocarbons, ammonium salts, and metals such as chromium, copper, lead, silver, zinc, nickel, and tin. Waste solids include soiled rags and sanding materials.

Final Draft to Ecy

Wastewater consists of solutions and rinses from electroplating operations, and the wastewaters from cleaning operations. Water may also be used to cool saws and grinding machines. Sludges are produced by the wastewater treatment process. Potential pollutants include TSS, oil and grease, organics, pH, BOD, COD, Total Kjeldahl Nitrogen, Nitrate and Nitrite Nitrogen, copper, zinc, lead, and silver.

Food Products

SIC: 2000

Description: Businesses in this category include meat packing plants, poultry slaughtering and processing, sausage and prepared meats, dairy products, preserved fruits and vegetables, flour, bakery products, sugar and confectioneries, vegetable and animal oils, beverages, canned, frozen or fresh fish, pasta products, snack foods, and manufactured ice. Food processing typically occurs inside buildings. Exceptions are meat packing plants where live animals may be kept outside, and fruit and vegetable plants where the raw material may be temporarily stored outside. Meat production facilities include stockyards, slaughtering, cutting and deboning, meat processing, rendering, and materials recovery. Dairy production facilities include receiving stations, clarification, separation, and pasteurization followed by culturing, churning, pressing, curing, blending, condensing, sweetening, drying, milling, and packaging. Canned frozen and preserved fruits and vegetables are typically produced by washing, cutting, blanching, and cooking followed by drying, dehydrating, and freezing.

Grain mill products are processed during washing, milling, debranning, heat treatment, screening, shaping, and vitamin and mineral supplementing. Bakery products processing includes mixing, shaping, of dough, cooling, and decorating. Operations at an edible oil manufacturer include refining, bleaching, hydrogenation, fractionation, emulsification, deodorization, filtration, and blending. Beverage production includes brewing, distilling, fermentation, blending, and packaging. Wine processors often crush grapes outside the process building and/or store equipment outside when not in use. Some wine producers use juice from grapes crushed elsewhere. Some vegetable and fruit processing plants use caustic solutions.

Potential Pollutant Generating Sources: The following are potential stormwater pollutant causing activities/sources: loading/unloading of materials, equipment/vehicle maintenance, liquid storage in tanks and drums, air emissions (ovens, vents), solid wastes handling and storage, wastewater treatment, pest control, animal containment and transit, and vegetable storage. Materials exposed to stormwater include acids, ammonia, activated carbon, bleach, blood, bone meal, brewing residuals, caustic soda, chlorine, coke oven tar, detergents, eggs, feathers, feed, ferric chloride, fruits, vegetables, coffee beans, gel bone, grain, hides, lard, manure, milk, salts, skim powder, starch, sugar, tallow, ethyl alcohol, oils, fats, whey, yeast, and wastes. The following are the pollutants typically

Final Draft to EPA

expected from this industry segment: BOD, TSS, Oil and Grease, pH, Kjeldahl Nitrogen, copper, manganese, fecal coliform, and pesticides.

Glass Products
SIC: 3210, 3220, 3230

Description: The glass form produced may be flat or window glass, safety glass, or container glass, tubing, glass wool, or fibers. The raw materials are sand mixed with a variety of oxides such as aluminum, antimony, arsenic, lead, copper, cobalt oxide, and barium. The raw materials are mixed and heated in a furnace. Processes that vary with the intended product shape the resulting molten material. The cooled glass may be edged, ground, polished, annealed and/or heat-treated to produce the final product. Air emissions from the manufacturing buildings are scrubbed to remove particulates.

Potential Pollutant Generating Sources: Raw materials are generally stored in silos except for crushed recycled glass and materials washed off recycled glass. Contamination of stormwater and/or ground water can be caused by raw materials lost during unloading operations, errant flue dust, equipment/vehicle maintenance and engine fluids from mobile lifting equipment that is stored outside. The maintenance of the manufacturing equipment will produce waste lubricants and cleaning solvents. The flue dust is likely to contain heavy metals such as arsenic, cadmium, chromium, mercury, and lead. Potential pollutants include suspended solids, oil and grease, high/low pH, and heavy metals such as arsenic, cadmium, chromium, mercury, and lead.

Industrial Machinery and Equipment, Trucks and Trailers, Aircraft, Aerospace, and Railroad
SIC: 3500, 3713/14, 3720, 3740, 3760, 3800

Description: This category includes the manufacture of a variety of equipment including engines and turbines, farm and garden equipment, construction and mining machinery, metal working machinery, pumps, computers and office equipment, automatic vending machines, refrigeration and heating equipment, and equipment for the manufacturing industries. This group also includes many small machine shops, and the manufacturing of trucks, trailers and parts, airplanes and parts, missiles, spacecraft, and railroad equipment and instruments.

Manufacturing processes include various forms of metal working and finishing, such as electroplating, anodizing, chemical conversion coating, etching, chemical milling, cleaning, machining, grinding, polishing, sand blasting, laminating, hot dip coating, descaling, degreasing, paint stripping, painting, and the production of plastic and fiberglass parts. Raw materials include ferrous and non-ferrous metals, such as aluminum, copper, iron, steel, and their alloys, paints, solvents, acids, alkalis, fuels, lubricating and cutting oils, and plastics.

Final Draft to TCY

Potential Pollutant Generating Sources: Potential pollutant sources include fuel islands, maintenance shops, loading/unloading of materials, and outside storage of gasoline, diesel, cleaning fluids, equipment, solvents, paints, wastes, detergents, acids, other chemicals, oils, metals, and scrap materials. Air emissions from stacks and ventilation systems are potential areas for exposure of materials to rain water.

Metal Products

SIC: 2514, 2522, 2542, 3312, 3314-17, 3320, 3350, 3360, 3400, 3590

Description: This group includes mills that produce basic metals and primary products, as well as foundries, electroplaters, and fabricators of final metal products. Basic metal production includes steel, copper, and aluminum. Mills that transform metal billets, either ferrous or nonferrous such as aluminum, to primary metal products are included. Primary metal forms include sheets, flat bar, building components such as columns, beams and concrete reinforcing bar, and large pipe.

Steel mills in the Pacific Northwest use recycled metal and electric furnaces. The molten steel is cast into billets or ingots that may be reformed on site or taken to rolling mills that produce primary products. As iron and steel billets may sit outside before reforming, surface treatment to remove scale may occur prior to reforming. Foundries pour or inject molten metal into a mold to produce a shape that cannot be readily formed by other processes. The metal is first melted in a furnace. The mold is made of sand or metal die blocks that are locked together to make a complete cavity. The molten metal is ladled in and the mold is cooled. The rough product is finished by quenching, cleaning and chemical treatment. Quenching involves immersion in a plain water bath or water with an additive.

Businesses that fabricate metal products from metal stock provide a wide range of products. The raw stock is manipulated in a variety of ways including machining of various types, grinding, heating, shearing, deformation, cutting and welding, soldering, sand blasting, brazing, and laminating. Fabricators may first clean the metal by sand blasting, descaling, or solvent degreasing. Final finishing may involve electroplating, painting, or direct plating by fusing or vacuum metalizing. Raw materials, in particular recycled metal, are stored outside prior to use, as are billets before reforming. The descaling process may use salt baths, sodium hydroxide, or acid (pickling).

Primary products often receive a surface coating treatment. Prior to the coating the product surface may be prepared by acid pickling to remove scale or alkaline cleaning to remove oils and greases. The two major classes of metallic coating operations are hot and cold coating. Zinc, tin and aluminum coatings are applied in molten metal baths. Tin and chromium are usually applied electrolytically from plating solutions.

Final Draft to EQY

Potential Pollutant Generating Sources: Potential pollutant generating sources include outside storage of chemicals, metal feedstock, byproducts (fluxes), finished products, fuels, lubricants, waste oil, sludge, waste solvents, Dangerous Wastes, piles of coal, coke, dusts, fly ash, baghouse waste, slag, dross, sludges, sand refractory rubble, and machining waste; unloading of chemical feedstock and loading of waste liquids such as spent pickle liquor by truck or rail; material handling equipment such as cranes, conveyors, trucks, and forklifts; particulate emissions from scrubbers, baghouses or electrostatic precipitators; fugitive emissions; maintenance shops; erosion of soil from plant yards; and floor, sink, and process wastewater drains.

Based on EPA's multi-sector industrial stormwater permit/fact sheet the following are ranges of mean composite/grab pollutant concentrations from this industrial group (values are in mg/L except pH): BOD at 34.1/32.2; COD at 109.8/221.3; NO2+NO3 N at 1.38/1.17; TKN at 3.05/3.56; Oil and grease at 8.88 (grab); pH at 2.6-10.3 (range-grab); total phosphorus at .52/1.25; TSS at 162/368; copper at 2.28/3.53; lead at .19/.79; zinc at 6.60/8.90; aluminum at 2.6/4.8; iron at 32.30/45.97; cadmium at 0.015/0.074; chromium at 2.2/5.053; nickel at 0.75/0.7; manganese at .59/.68; ammonia at .55/.85; and pyrene at .01/.06.

Paper and Pulp

SIC: 2610, 2620, 2630

Description: Large industrial complexes in which pulp and/or paper, and/or paperboard are produced. Products also include newsprint, bleached paper, glassine, tissue paper, vegetable parchment, and industrial papers. Raw materials include; wood logs, chips, wastepaper, jute, hemp, rags, cotton linters, bagasse, and esparto. The chips for pulping may be produced on-site from logs, and/or imported.

The following manufacturing processes are typically used: raw material preparation, pulping, bleaching, and papermaking. All of these operations use a wide variety of chemicals including caustic soda, sodium and ammonium sulfites, chlorine, titanium oxide, starches, solvents, adhesives, biocides, hydraulic oils, lubricants, dyes, and many chemical additives.

Potential Pollutant Generating Sources: The large process equipment used for pulping is not enclosed. Thus, precipitation falling over these areas may become contaminated. Maintenance of the process equipment produces waste products similar to that produced from vehicle and mobile equipment maintenance. Logs may be stored, debarked and chipped on site. Large quantities of chips are stored outside. Although this can be a source of pollution, the volume of stormwater flow is relatively small because the chip pile retains the majority of the precipitation. Mobile equipment such as forklifts, log stackers, and chip dozers are sources of leaks/spills of hydraulic fluids. Vehicles and equipment are fueled and maintained on-site.

Final Draft to Ecy

Paper Products
SIC: 2650, 2670

Description: Included are businesses that take paper stock and produce basic paper products such as cardboard boxes and other containers, and stationery products such as envelopes and bond paper. Wood chips, pulp, and paper can be used as feedstock.

Potential Pollutant Generating Sources: The following are potential pollutant sources:

1. Outside loading/unloading of solid and liquid materials.
2. Outside storage and handling of dangerous wastes, and other liquid and solid materials.
3. Maintenance and fueling activities.
4. Outside processing activities comparable to Pulp and Paper processing in preceding section.

Petroleum Products
SIC: 2911, 2950

Description: The petroleum refining industry manufactures gasoline, kerosene, distillate and residual oils, lubricants and related products from crude petroleum, and asphalt paving and roofing materials. Although petroleum is the primary raw material, petroleum refineries also use other materials such as natural gas, benzene, toluene, chemical catalysts, caustic soda, and sulfuric acid. Wastes may include filter clays, spent catalysts, sludges, and oily water.

Asphalt paving products consist of sand, gravel and petroleum-based asphalt that serves as the binder. Raw materials include stockpiles of sand and gravel and asphalt emulsions stored in aboveground tanks.

Potential Pollutant Generating Sources:

- Outside processing such as distillation, fractionation, catalytic cracking, solvent extraction, coking, desulfuring, reforming, and desalting.
- Petrochemical and fuel storage and handling.
- Outside liquid chemical piping and tankage.
- Mobile liquid handling equipment such as tank trucks, forklifts, etc.
- Maintenance and parking of trucks and other equipment.
- Waste Piles, and handling and storage of asphalt emulsions, cleaning chemicals, and solvents.
- Waste treatment and conveyance systems.

Final Draft to ECY

The following are potential pollutants at oil refineries: oil and grease, BOD5, COD, TOC, phenolic compounds, PAH, ammonia nitrogen, TKN, sulfides, TSS, low and high pH, and chromium (total and hexavalent).

Printing
SIC: 2700

Description: This industrial category includes the production of newspapers, periodicals, commercial printing materials and businesses that do their own printing and those that perform services for the printing industry, for example bookbinding. Processes include typesetting, engraving, photoengraving, and electrotyping.

Potential Pollutant Generating Sources: Various materials used in modifying the paper stock include inorganic and organic acids, resins, solvents, polyester film, developers, alcohol, vinyl lacquer, dyes, acetates, and polymers. Waste products may include waste inks and ink sludge, resins, photographic chemicals, solvents, acid and alkaline solutions, chlorides, chromium, zinc, lead, spent formaldehyde, silver, plasticizers, and used lubricating oils. As the printing operations occur indoors, the only likely points of potential contact with stormwater are the outside temporary storage of waste materials, offloading of chemicals at external unloading bays, and vehicle/equipment repair and maintenance. Pollutants of concern include TSS, pH, heavy metals, oil and grease, and COD.

Rubber and Plastic Products
SIC: 3000

Description: Although different in basic feedstock and processes used, businesses that produce rubber, fiberglass and plastic products belong to the same SIC group. Products in this category include rubber tires, hoses, belts, gaskets, seals; and plastic sheet, film, tubes, pipes, bottles, cups, ice chests, packaging materials, and plumbing fixtures. The rubber and plastics industries use a variety of processes ranging from polymerization to extrusion using natural or synthetic raw materials. These industries use natural or synthetic rubber, plastics components, pigments, adhesives, resins, acids, caustic soda, zinc, paints, fillers, and curing agents.

Potential Pollutant Generating Sources: Pollutant generating sources/activities include storage of liquids, other raw materials or by-products, scrap materials, oils, solvents, inks and paints; unloading of liquid materials from trucks or rail cars; washing of equipment; waste oil and solvents produced by cleaning manufacturing equipment; used equipment that could drip oil and residual process materials; and maintenance shops.

Based on data in EPA's multi-sector permit fact sheet the following are mean pollutant concentrations in mg/L, except for pH (unitless) and 1,1,1 trichloroethane, methylene chloride, toluene, zinc, oil/grease which are min.-max. grab sample values: BOD at 11.21-13.92, COD at 72.08-100.0,

Final Draft to EPA

NO3 + NO2 Nitrogen at 86-1.26, TKN at 1.55-2.34, total phosphorus at .34-.41, TSS at 119.32-188.55, pH range of 2.56-10.1, trichloroethane at 0.00-0.38, methylene chloride at 0.00-13.0, toluene at 0.00-3.8, zinc at .011-7.60 and oil and grease at 0.0-91.0. These data may be helpful in characterizing potential stormwater pollutants.

Ship and Boat Building and Repair Yards

SIC: 3730

Description: Businesses that build or repair ships and boats. Typical activities include hull scraping, sandblasting, finishing, metal fabrication, electrical repairs, engine overhaul, and welding, fiberglass repairs, hydroblasting and steam cleaning.

Potential Pollutant Generating Sources: Outside boatyard activities that can be sources of stormwater pollution include pressure washing, surface preparation, paint removal, sanding, painting, engine/vessel maintenance and repairs, and material handling and storage.

Secondary sources of stormwater contaminants are cooling water, pump testing, gray water, sanitary waste, washing down the work area, and engine bilge water. Engine room bilge water and oily wastes are typically collected and disposed of through a licensed contracted disposal company. Two prime sources of copper are leaching of copper from anti-fouling paint and wastes from hull maintenance. Wastes generated by boatyard activities include spent abrasive grits, spent solvent, spent oils, fuel, ethylene glycol, washwater, paint overspray, various cleaners/detergents and anti-corrosive compounds, paint chips, scrap metal, welding rods, wood, plastic, resins, glass fibers, dust, and miscellaneous trash such as paper and glass.

Ecology, local shipyards, and METRO have sampled pressure wash wastewater. The effluent quality has been variable and frequently exceeds water quality criteria for copper, lead, tin, and zinc. From monitoring results received to date, metal concentrations typically range from 5 to 10 mg/L, but have gone as high as 190 mg/L copper with an average 55 mg/L copper.

Wood

SIC 2420, 2450, 2434, 2490, 2511/12, 2517, 2519, 2521, 2541

Description: This group includes sawmills, and all businesses that make wood products using cut wood, with the exception of wood treatment businesses. Wood treatment as well as log storage and sorting yards are covered in other sections of this chapter. Included in this group are planing mills, millworks, and businesses that make wooden containers and prefab building components, mobile homes, and glued-wood products like laminated beams, as well as office and home furniture, partitions, and cabinets. All businesses employ cutting equipment whose by-products are chips and sawdust. Finishing is conducted in many operations.

Final Draft to Ecy

Potential Pollutant Generating Sources: Businesses may have operations that use paints, solvents, wax emulsions, melamine formaldehyde and other thermosetting resins, and produce waste paints and paint thinners, turpentine, shellac, varnishes and other waste liquids. Outside storage, trucking, and handling of these materials can also be pollutant sources.

Potential pollutants reported in EPA's draft multi-sector permit/fact sheet (U.S. EPA, 1995) include the following (all are grab/composite mean values, in mg/L, except for oil and grease and pH): BOD at 39.6/45.4, COD at 297.6/242.5, NO3 + NO2-N at 0.95/0.75, TKN at 2.57/2.32, Tot. Phosphorus at 23.91/6.29; TSS at 1108/575, arsenic at .025/.028, copper at .047/.041, total phenols at .02/.007, oil and grease at 15.2, and pH at 3.6. These data may help in characterizing the potential stormwater pollutants at the facility.

Wood Treatment
SIC: 2491

Description: This group includes both anti-staining and wood preserving. The wood stock must be brought to the proper moisture content prior to treatment, which is achieved by either air-drying or kiln drying. Some wood trimming may occur. After treatment, the lumber is typically stored outside. Forklifts are used to move both the raw and finished product. Wood treatment consists of a pressure process using the chemicals described below. Anti-staining treatment is conducted using dip tanks or by spraying. Wood preservatives include creosote, creosote/coal tar, pentachlorophenol, copper naphthenate or inorganic arsenicals such as chromated copper arsenate dissolved in water. The use of pentachlorophenol is declining in the Puget Sound region.

Potential Pollutant Generating Sources: Potential pollutant generating sources/activities include the retort area, handling of the treated wood, outside storage of treated materials/products, equipment/vehicle storage and maintenance, and the unloading, handling, and use of the preservative chemicals. Based on EPA's multi-sector permit/fact sheet (U.S. EPA, 1995) the following stormwater contaminants have been reported: COD, TSS, BOD, and the specific pesticide(s) used for the wood preservation.

Other Manufacturing Businesses
SIC: 2200, 2300, 2873/74, 3100, 3200, 3250-69, 3280, 3290

Description: Includes manufacturing of textiles and apparel, agricultural fertilizers, leather products, clay products such as bricks, pottery, bathroom fixtures; and nonmetallic mineral products.

Potential Pollutant Generating Sources: Pollutant generating sources at facilities in these categories include fueling, loading & unloading, material storage and handling (especially fertilizers), and vehicle and equipment cleaning and maintenance. Potential pollutants include TSS, BOD, COD,

Final Draft to EC

Oil and Grease, heavy metals and fertilizer components including nitrates, nitrites, ammonia nitrogen, Kjeldahl Nitrogen, and phosphorous compounds.

A.2 Transportation and Communication

Airfields and Aircraft Maintenance
SIC: 4513, 4515

Description: Industrial activities include vehicle and equipment fueling, maintenance and cleaning, and aircraft/runway deicing.

Potential Pollutant Generating Sources: Fueling is accomplished by tank trucks at the aircraft and is a source of spills. Dripping of fuel and engine fluids from the aircraft and at vehicle/equipment maintenance/ cleaning areas application of deicing materials to the aircraft and the runways are potential sources of stormwater contamination. Aircraft maintenance and cleaning produces a wide variety of waste products, similar to those found with any vehicle or equipment maintenance, including: used oil and cleaning solvents, paints, oil filters, soiled rags, and soapy wastewater. Deicing materials used on aircraft and/or runways include ethylene and propylene glycol, and urea. Other chemicals currently considered for ice control are sodium and potassium acetates, isopropyl alcohol, and sodium fluoride. Pollutant constituents include oil and grease, TSS, BOD, COD, TKN, pH and specific deicing components such as glycol and urea.

Fleet Vehicle Yards
SIC: 4100*, 4210, 4230, 7381/2, 7510*

Description: Includes all businesses which own, operate and maintain or repair large vehicle fleets, including cars, buses, trucks and taxis, as well as the renting or leasing of cars, trucks, and trailers.

Potential Pollutant Generating Sources:

1. Spills/leaks of fuels, used oils, oil filters, antifreeze, solvents, brake fluid, and batteries, sulfuric acid, battery acid sludge, and leaching from empty contaminated containers and soiled rags.
2. Leaking underground storage tanks that can cause ground water contamination and is a safety hazard.
3. Dirt, oils and greases from outside steam cleaning and vehicle washing.
4. Dripping of liquids from parked vehicles.
5. Solid and liquid wastes (noted above) that are not properly stored while awaiting disposal or recycling.
6. Loading and unloading area.

Final Draft to Ecy

Railroads
SIC: 4011/13

Description: Railroad activities are spread over a large geographic area: along railroad lines, in switching yards, and in maintenance yards. Railroad activity occurs on both property owned or leased by the railroad and at the loading or unloading facilities of its customers. Employing BMPs at commercial or public loading and unloading areas is the responsibility of the particular property owner.

Potential Pollutant Generating Sources: The following are potential sources of pollutants: dripping of vehicle fluids onto the road bed, leaching of wood preservatives from the railroad ties, human waste disposal, litter, locomotive sanding areas, locomotive/railcar/equipment cleaning areas, fueling areas, outside material storage areas, the erosion and loss of soil particles from the bed, and herbicides used for vegetation management.

Maintenance activities include maintenance shops for vehicles and equipment, track maintenance, and ditch cleaning. In addition to the railroad stock, the maintenance shops service highway vehicles and other types of equipment. Waste materials can include waste oil, solvents, degreasers, antifreeze, radiator flush, acid solutions, brake fluids, soiled rags, oil filters, sulfuric acid and battery sludge, and machine chips with residual machining oil and any toxic fluids or solids lost during transit. The following are potential pollutants at railyards: Oil and grease, TSS, BOD, organics, pesticides, and heavy metals.

Warehouses and Mini-Warehouses
SIC: 4220

Description: Businesses that store goods in buildings and other structures.

Potential Pollutant Generating Sources: The following are potential pollutant sources from warehousing operations: Loading and unloading areas, outside storage of materials and equipment, fueling and maintenance areas. Potential pollutants include oil and grease and TSS.

Other Transportation and Communication
SIC: 4700-4900

Description: This group includes travel agencies, communication services such as TV and radio stations, cable companies, and electric and gas services. It does not include railroads, airplane transport services, airlines, pipeline companies, and airfields.

Potential Pollutant Generating Sources: Gas and electric services are likely to own vehicles that are washed, fueled and maintained on site. Communication service companies can generate used oils and Dangerous Wastes. The following are the potential pollutants: Oil and grease, TSS, BOD, and heavy metals.

Final Draft to Ecy

A.3 Retail and Wholesale Businesses

Gas Stations
SIC: 5540

Refer to S409 BMPs Fueling at Dedicated Stations in Chapter 2 of this Book to select required BMPs.

Recyclers and Scrap Yards
SIC: 5093, 5015

Refer to S423 BMPs for Recyclers and Scrap Yards

Commercial Composting
SIC 2875

Description: This typically applies to businesses that have numerous compost piles that require large open areas to break down the wastes. Composting can contribute nutrients, organics, coliform bacteria, low pH, color, and suspended solids to stormwater runoff.

Potential Pollutant Generating Sources: The compost is required to be contained, but may be a cause for concern during loading and unloading. Compost can have high levels of nutrients, organics, coliform bacteria, low pH, color concerns and suspended solids. Composting requires heavy equipment such as trucks and loaders. The equipment can generate oil and grease.

Restaurants/Fast Food
SIC: 5800

Description: Businesses that provide food service to the general public, including drive through facilities.

Potential Pollutant Generating Sources: Potential pollutant sources include high-use customer parking lots and garbage dumpsters. The cleaning of roofs and other outside areas of restaurant and cooking vent filters in the parking lot can cause cooking grease to be discharged to the storm drains. The discharge of washwater or grease to storm drains or surface water is not allowed.

Retail/General Merchandise
SIC: 5300, 5600, 5700, 5900, and 5990

Description: This group includes general merchandising stores such as department stores, shopping malls, variety stores, 24-hour convenience stores, and general retail stores that focus on a few product types such as clothing and shoes. It also includes furniture and appliance stores.

Potential Pollutant Generating Sources: Of particular concern are the high-use parking lots of shopping malls and 24-hour convenience stores. Furniture and appliance stores may provide repair services in which Dangerous Wastes may be produced.

Final Draft to EPA

Retail/Wholesale Vehicle and Equipment Dealers

SIC: 5010, 5080, and 5500, 751 excluding fueling stations (5540)

Description: This group includes all retail and wholesale businesses that sell, rent, or lease cars, trucks, boats, trailers, mobile homes, motorcycles and recreational vehicles. It includes both new and used vehicle dealers. It also includes sellers of heavy equipment for construction, farming, and industry. With the exception of motorcycle dealers, these businesses have large parking lots. Most retail dealers that sell new vehicles and large equipment also provide repair and maintenance services.

Potential Pollutant Generating Sources: Oil and other materials that have dripped from parked vehicles can contaminate stormwater at high-use parking areas. Vehicles are washed regularly generating vehicle grime and detergent pollutants. The storm or washwater runoff will contain oils and various organics, metals, and phosphorus. Repair and maintenance services generate a variety of waste liquids and solids including used oils and engine fluids, solvents, waste paint, soiled rags, and dirty used engine parts. Many of these materials are Dangerous Wastes.

Retail/Wholesale Nurseries and Building Materials

SIC: 5030, 5198, 5210, 5230, and 5260

Description: These businesses are placed in a separate group because they are likely to store much of their merchandise outside of the main building. They include nurseries, and businesses that sell building and construction materials and equipment, paint (5198, 5230) and hardware.

Potential Pollutant Generating Sources: Some businesses may have small fueling capabilities for forklifts and may also maintain and repair their vehicles and equipment. Some businesses may have unpaved areas, with the potential to contaminate stormwater by leaching of nutrients, pesticides, and herbicides. Businesses in this group surveyed in the Puget Sound area for Dangerous Wastes were found to produce waste solvents, paints and used oil. Storm runoff from exposed storage areas can contain suspended solids, and oil and grease from vehicles and forklifts and high-use customer parking lots, and other pollutants. Runoff from nurseries may contain nutrients, pesticides and/or herbicides.

Retail/Wholesale Chemicals and Petroleum

SIC: 5160, 5170

Description: These businesses sell plastic materials, chemicals and related products. This group also includes the bulk storage and selling of petroleum products such as diesel oil, automotive fuels, etc.

Potential Pollutant Generating Sources: The general areas of concern are the spillage of chemicals or petroleum during loading and unloading, and the washing and maintenance of tanker trucks and other vehicles. Also, the fire code requires that vegetation be controlled within a tank farm to avoid a fire hazard. Herbicides are typically used. The

Final Draft to Ecy

concentration of oil in untreated stormwater is known to exceed the water quality effluent guideline for oil and grease. Runoff is also likely to contain significant concentrations of benzene, phenol, chloroform, lead, and zinc.

Retail/Wholesale Foods and Beverages
SIC 5140, 5180, 541, 542, 543

Description: Included are businesses that provide retail food stores including general groceries, fish and seafood, meats and meat products, dairy products, poultry, soft drinks, and alcoholic beverages.

Potential Pollutant Generating Sources: Vehicles may be fueled, washed and maintained at the business. Spillage of food and beverages may occur. Waste food and broken contaminated glass may be temporarily stored in containers located outside. High-use customer parking lots may be sources of oil and other contaminants

Other Retail/Wholesale Businesses
SIC: 5010 (not 5012), 5040, 5060, 5070, 5090, 515

Description: Businesses in this group include sellers of vehicle parts, tires, furniture and home furnishings, photographic and office equipment, electrical goods, sporting goods and toys, paper products, drugs, and apparel.

Potential Pollutant Generating Sources: Pollutant sources include high-use parking lots, and delivery vehicles that may be fueled, washed, and maintained on premises.

A.4 Service Businesses

Animal Care Services
SIC: 0740, 0750

Description: This group includes racetracks, kennels, fenced pens, veterinarians and businesses that provide boarding services for animals including horses, dogs, and cats.

Potential Pollutant Generating Sources: The primary sources of pollution include animal manure, washwaters, waste products from animal treatment, runoff from pastures where larger livestock are allowed to roam, and vehicle maintenance and repair shops. Pastures may border streams and direct access to the stream may occur. Both surface water and ground water may be contaminated. Potential stormwater contaminants include fecal coliform, oil and grease, suspended solids, BOD, and nutrients.

Final Draft to Ecy

Commercial Car and Truck Washes

SIC: 7542

Description: Facilities include automatic systems found at individual businesses or at gas stations and 24-hour convenience stores, as well as self-service. There are three main types: tunnels, rollovers and hand-held wands. The tunnel wash, the largest, is housed in a long building through which the vehicle is pulled. At a rollover wash the vehicle remains stationary while the equipment passes over. Wands are used at self-serve car washes. Some car washing businesses also sell gasoline.

Potential Pollutant Generating Sources: Wash wastewater may contain detergents and waxes. Wastewater should be discharged to sanitary sewers. In self-service operations a drain is located inside each car bay. Although these businesses discharge the wastewater to the sanitary sewer, some washwater can find its way to the storm drain, particularly with the rollover and wand systems. Rollover systems often do not have air-drying. Consequently, as it leaves the enclosure the car sheds water to the pavement. With the self-service system, washwater with detergents can spray outside the building and drain to storm sewer. Users of self-serve operations may also clean engines and change oil, dumping the used oil into the storm drain. Potential pollutants include oil and grease, detergents, soaps, BOD, and TSS.

Equipment Repair

SIC: 7353, 7600

Description: This group includes several businesses that specialize in repairing different equipment including communications equipment, radio, TV, household appliances, and refrigeration systems. Also included are businesses that rent or lease heavy construction equipment as miscellaneous repair and maintenance may occur on site.

Potential Pollutant Generating Sources: Potential pollutant sources include storage and handling of fuels, waste oils and solvents, and loading/unloading areas. Potential pollutants include oil and grease, low/high pH, and suspended solids.

Laundries and Other Cleaning Services

SIC: 7211 through 7217

Description: This category includes all types of cleaning services such as laundries, linen suppliers, diaper services, coin-operated laundries and dry cleaners, and carpet and upholstery services. Wet washing may involve the use of acids, bleaches and/or multiple organic solvents. Dry cleaners use an organic-based solvent, although small amounts of water and detergent are sometimes used. Solvents may be recovered and filtered for further use. Carpets and upholstery may be cleaned with dry materials, hot water extraction process, or in-plant processes using solvents followed by a detergent wash.

Final Draft to EPA

Potential Pollutant Generating Sources: Wash liquids are discharged to sanitary sewers. Stormwater pollutant sources include: loading and unloading of liquid materials, particularly at large commercial operations, disposal of spent solvents and solvent cans, high-use customer parking lots, and outside storage and handling of solvents and waste materials. Potential stormwater contaminants include oil and grease, chlorinated and other solvents, soaps and detergents, low/high pH, and suspended solids.

Marinas and Boat Clubs
SIC: 7999

Description: Marinas and yacht clubs provide moorage for recreational boats. Marinas may also provide fueling and maintenance services. Other activities include cleaning and painting of boat surfaces, minor boat repair, and pumping of bilges and sanitary holding tanks. Not all marinas have a system to receive pumped bilge water.

Potential Pollutant Generating Sources: Both solid and liquid wastes are produced as well as stormwater runoff from high-use customer parking lots. Waste materials include sewage and bilge water. Maintenance by the tenants will produce used oils, oil filters, solvents, waste paints and varnishes, used batteries, and empty contaminated containers and soiled rags. Potential stormwater contaminants include oil and grease, suspended solids, heavy metals, and low/high pH.

Golf and Country Clubs
SIC: 7992, 7997

Description: Public and private golf courses and parks are included.

Potential Pollutant Generating Sources: Maintenance of grassed areas and landscaped vegetation has historically required the use of fertilizers and pesticides. Golf courses contain small lakes that are sometimes treated with algaecides and/or mosquito larvicides. The fertilizer and pesticide application process can lead to inadvertent contamination of nearby surface waters by overuse, misapplication, or the occurrence of storms shortly after application. Heavy watering of surface greens in golf courses may cause pesticides or fertilizers to migrate to surface and shallow ground water resources. The use of pesticides and fertilizers generates waste containers. Equipment must be cleaned and maintained.

Miscellaneous Services
SIC: 4959, 7260, 7312, 7332, 7333, 7340, 7395, 7641, 7990, 8411

Description: This group includes photographic studios, commercial photography, funeral services, amusement parks, furniture and upholstery repair and pest control services, and other professional offices. Pollutants from these activities can include pesticides, waste solvents, heavy metals, pH, and suspended solids, soaps and detergents, and oil and grease.

Potential Pollutant Generating Sources: Leaks and spills of materials from the following businesses can be sources of stormwater pollutants:

Final Draft to EPA

1. Building maintenance produces wash and rinse solutions, oils, and solvents.
2. Pest control produces rinsewater with residual pesticides from washing application equipment and empty containers.
3. Outdoor advertising produces photographic chemicals, inks, waste paints, organic paint sludges containing metals.
4. Funeral services produce formalin, formaldehyde, and ammonia.
5. Upholstery and furniture repair businesses produce oil, stripping compounds, wood preservatives and solvents.

Professional Services
SIC: 6000, 7000 and 8000, 806, 807 not listed elsewhere

Description: The remaining service businesses include theaters, hotels/motels, finance, banking, hospitals, medical/dental laboratories, medical services, nursing homes, schools/universities, and legal, financial and engineering services. Stormwater from parking lots will contain undesirable concentrations of oil and grease, suspended particulates, and metals such as lead, cadmium and zinc. Dangerous wastes might be generated at hospitals, nursing homes and other medical services.

Potential Pollutant Generating Sources: The primary concern is runoff from high use parking areas, maintenance shops, and storage and handling of dangerous wastes.

Vehicle Maintenance and Repair
SIC: 4000, 7530, 7600

Description: This category includes businesses that paint, repair and maintain automobiles, motorcycles, trucks, and buses and battery, radiator, muffler, lube, tune-up and tire shops, excluding those businesses listed elsewhere in this manual.

Potential Pollutant Generating Sources: Pollutant sources include storage and handling of vehicles, solvents, cleaning chemicals, waste materials, vehicle liquids, batteries, and washing and steam cleaning of vehicles, parts, and equipment. Potential pollutants include waste oil, solvents, degreasers, antifreeze, radiator flush, acid solutions with chromium, zinc, copper, lead and cadmium, brake fluid, soiled rags, oil filters, sulfuric acid and battery sludge, and machine chips in residual machining oil.

Multi-Family Residences
SIC: NA

Description: Multifamily residential buildings such as apartments and condominiums. The activities of concern are vehicle parking, vehicle washing and oil changing, minor repairs, and temporary storage of garbage.

Final Draft to Ecy

Potential Pollutant Generating Sources: Stormwater contamination can occur at vehicle parking lots and from washing of vehicles. Runoff from parking lots may contain undesirable concentrations of oil and grease, suspended particulates, and metals such as lead, cadmium, and zinc.

Construction Businesses
SIC: 1500, 1600, 1700

Description: This category includes builders of homes, commercial and industrial buildings, and heavy equipment as well as plumbing, painting and paper hanging, carpentry, electrical, roofing and sheet metal, wrecking and demolition, stonework, drywall, and masonry contractors. It does not include construction sites.

Potential Pollutant Generating Sources: Potential pollutant sources include leaks/spills of used oils, solvents, paints, batteries, acids, strong acid/alkaline wastes, paint/varnish removers, tars, soaps, coatings, asbestos, lubricants, anti-freeze compounds, litter, and fuels at the headquarters, operation, staging, and maintenance/repair locations of the businesses.

Demolition contractors may store reclaimed material before resale. Roofing contractors generate residual tars and sealing compounds, spent solvents, kerosene, and soap cleaners, as well as non- dangerous waste roofing materials. Sheet metal contractors produce small quantities of acids and solvent cleaners such as kerosene, metal shavings, adhesive residues and enamel coatings, and asbestos residues that have been removed from buildings. Asphalt paving contractors are likely to store application equipment such as dump trucks, pavers, tack coat tankers and pavement rollers at their businesses. Stormwater passing through this equipment may be contaminated by the petroleum residuals. Potential pollutants include oil and grease, suspended solids, BOD, heavy metals, pH, COD, organic compounds, etc.

A.5 Public Agency Activities

Introduction

Local, state, and federal governments conduct many of the pollutant generating activities conducted at business facilities. Local governments include cities and counties, and also single-purpose entities such as fire, sewer and water districts.

Public Facilities and Streets

Description: Included in this group are public buildings. Also included are maintenance (deicing), and repair of streets and roads.

Potential Pollutant Generating Sources: Wastes generated include deicing and anti-icing compounds, solvents, paint, acid and alkaline

Final Draft to ECY

wastes, paint and varnish removers, and debris. Large amounts of scrap materials are also produced throughout the course of construction and street repair. Potential pollutants include suspended solids, oil and grease, and low/high pH.

Potential Pollutant Generating Sources: Wastes generated include deicing and anti-icing compounds, solvents, paint, acid and alkaline wastes, paint and varnish removers, and debris. Large amounts of scrap materials are also produced throughout the course of construction and street repair. Potential pollutants include suspended solids, oil and grease, and low/high pH.

Maintenance of Open Public Space Areas

Description: The maintenance of large open spaces that are covered by expanses of grass and landscaped vegetation. Examples are zoos and public cemeteries. Golf courses and parks are covered in Chapter 2.

Potential Pollutant Generating Sources: Maintenance of grassed areas and landscaped vegetation has historically required the use of fertilizers and pesticides. Golf courses contain small lakes that are sometimes treated with algaecides and/or mosquito larvicides. The application of pesticides can lead to inadvertent contamination of nearby surface waters by overuse, misapplication, or the occurrence of storms shortly after application. Heavy watering of surface greens in golf courses may cause pesticides or fertilizers to migrate to surface and shallow ground water resources. The application of pesticides and fertilizers generates waste containers. Equipment must be cleaned and maintained. Maintenance shops where the equipment is maintained must comply with the BMPs specified under BMP Maintenance and Repair of Vehicles and Equipment.

Maintenance of Public Stormwater Pollutant Control Facilities

Description: Facilities include roadside catch basins on arterials and within residential areas, conveyance pipes, detention facilities such as ponds and vaults, oil and water separators, biofilters, settling basins, infiltration systems, and all other types of stormwater treatment systems presented in Book 1.

Potential Pollutant Generating Sources: Research has shown that roadside catch basins can remove from 5 to 15 percent of the pollutants present in stormwater. However, to be effective they must be cleaned. Research has indicated that once catch basins are about 60 percent full of sediment, they cease removing sediments. Generally in urban areas, catch basins become 60 percent full within 6 to 12 months.

Water and solids produced during the cleaning of stormwater treatment systems, including oil and water separators, can adversely affect both surface and ground water quality if disposed of improperly. Ecology has

Final Draft to Ecy

documented water quality violations and fish kills due to improper disposal of decant water (water that is removed) and catch basin sediments from maintenance activities. Disposal of decant water and solids shall be conducted in accordance with local, state, and federal requirements.

Historically, decant water from trucks has been placed back in the storm drain. Solids have been disposed of in permitted landfills and in unpermitted vacant land including wetlands. Research has shown that these residuals contain pollutants at concentrations that exceed water quality criteria. For example, limited sampling by King County and the Washington Department of Transportation of sediments removed from catch basins in residential and commercial areas has found the petroleum hydrocarbons to frequently exceed 200 mg/gram. Above this concentration, regulations require disposal at a lined landfill.

Water and Sewer Districts and Departments

Description: The maintenance of water and sewer systems can produce residual materials that, if not properly handled, can cause short-term environmental impacts in adjacent surface and/or ground waters. With the exception of a few simple processes, both water and sewage treatment produce residual sludge that must be disposed of properly. However, this activity is controlled by other Ecology regulatory programs and is not discussed in this manual. Larger water and sewer districts or departments may service their own vehicles.

Potential Pollutant Generating Sources: Maintenance operations of concern include the cleaning of sewer and water lines, and water reservoirs, general activities around treatment plants, disposal of sludge, and the temporary shutdown of pump stations for either normal maintenance or emergencies. During the maintenance of water transmission lines and reservoirs, water district/departments must dispose of wastewater, both when the line or reservoir is initially emptied, as well as when it is cleaned and then sanitized. Sanitation requires chlorine concentrations of 25 to 100 ppm, considerably above the normal concentration used to chlorinate drinking water. These waters are discharged to sanitary sewers where available.

However, transmission lines from remote water supply sources often pass through both rural and urban-fringe areas where sanitary sewers are not available. In these areas, chlorinated water may have to be discharged to a nearby stream or storm drain, particularly since the emptying of a pipe section occurs at low points that frequently exist at stream crossings. Although prior to disposal the water is dechlorinated using sodium thiosulfate or a comparable chemical, malfunctioning of the dechlorination system can kill fish and other aquatic life. The drainage from reservoirs located in unsewered areas is conveyed to storm drains. The cleaning of sewer lines and manholes generates sediments. These sediments contain

Final Draft to EPA

both inorganic and organic materials are odorous and contaminated with microorganisms and heavy metals. Activities around sewage treatment plants can be a source of non-point pollution. Besides the normal runoff of stormwater from paved surfaces, grit removed from the headworks of the plant is stored temporarily in dumpsters that may be exposed to the elements. Maintenance and repair shops may produce waste paints, used oil, cleaning solvents, and soiled rags.

Port Districts

Description: The port districts considered here include the following business activities: recreational boat marinas and launch ramps, airfields, container trans-shipment, bulk material import/export including farm products, lumber, logs, alumina, and cement; and break-bulk (piece) material such as machinery, equipment, and scrap metals. Port districts frequently have tenants whose activities are not marine-dependent.

Potential Pollutant Generating Sources: Marine terminals require extensive use of mobile equipment that may drip liquids. Waste materials associated with containers/vehicle/equipment washing/steam cleaning, maintenance and repair may be generated at a marine terminal. Debris can accumulate in loading/unloading or open storage areas, providing a source of stormwater contamination. Wooden debris from the crating of piece cargo crushed by passing mobile loading equipment leaches soluble pollutants when in contact with pooled stormwater. Log sorting yards produce large quantities of bark that can be a source of suspended solids and leached pollutants. Potential pollutants include oil and grease, TSS, heavy metals, and organics.

Final Draft to FCY

This page purposely left blank

Final Draft to ECY

Stormwater Pollutants and Their Adverse Impact

The stormwater pollutants of most concern are total suspended solids (TSS), oil and grease, nutrients, pesticides, other organics, pathogens, biochemical oxygen demand (BOD), heavy metals, and salts (chlorides) (USEPA, 1995, Field and Pitt, 1997, Strecker, et.al., 1997).

Total Suspended Solids

This represents particulate solids such as eroded soil, heavy metal precipitates, and biological solids (all considered as conventional pollutants), which can cause sedimentation in streams and turbidity in receiving surface waters. These sediments can destroy the desired habitat for fish and can impact drinking water supplies. The sediment may be carried to streams, lakes, or Puget Sound where they may be toxic to aquatic life and make dredging necessary.

Oil and Grease

Oil and grease can be toxic to aquatic life. Concentrations in stormwater from commercial and industrial areas often exceed the Washington Department of Ecology (Ecology) guidelines of: 10 mg/l maximum daily average, 15 mg/L maximum at any time, and no ongoing or frequently recurring visible sheen.

Nutrients

Phosphorus and nitrogen compounds can cause excessive growth of aquatic vegetation in lakes and marine waters.

BOD

Biological Oxygen Demand (BOD) is a measure of the oxygen demand from organic, nitrogenous, and other materials that are consumed by bacteria present in receiving waters. BOD in the water may deplete Oxygen in the process, threatening higher organisms such as fish.

Toxic Organics

A study found 19 of the U.S. Environmental Protection Agency's 121 priority pollutants present in the runoff from Seattle streets. The most frequently detected pollutants were pesticides, phenols, phthalates, and polynuclear aromatic hydrocarbons (PAHs).

Final Draft to Ecy

Heavy Metals

Stormwater can contain heavy metals such as lead, zinc, cadmium, and copper at concentrations that often exceed water quality criteria and that can be toxic to fish and other aquatic life. Research in Puget Sound has shown that metals and toxic organics concentrate in sediments and at the water surface (microlayer) where they interfere with the reproductive cycle of many biotic species as well as cause tumors and lesions in fish.

pH

A measure of the alkalinity or acidity that can be toxic to fish if it varies appreciably from neutral pH, which is 7.0.

Bacteria and Viruses

Stormwater can contain disease-causing bacteria and viruses, although not at concentrations found in sanitary sewage. Shellfish subjected to stormwater discharges near urban areas are usually unsafe for human consumption.

Research has shown that the concentrations of pollutants in stormwater from residential, commercial, and industrial areas can exceed Ecology's water quality standards and guidelines.

Final Draft to ECY

Recycling/Disposal of Vehicle Fluids/Other Wastes*

	RECOMMENDED MANAGEMENT
Antifreeze	Store separately for resale. Separate ethylene glycol from propylene glycol for off-site recycling. If not recyclable, send to Treatment, Storage, and Disposal Facility (TSDF) for disposal.
Batteries	INTACT: Accumulate under cover prior to sale, deliver to recycler, or return to manufacturer. BROKEN: Accumulate acid from broken batteries in resistant containers with secondary containment. Send to TSDF for disposal.
Brake fluid	Accumulate in separate, marked, closed container. Do not mix with waste oil. Recycle.
Fuel	Store gasoline, and diesel separately for use or resale. Mixtures of diesel, gasoline, oil, and other fluids may not be recyclable and may require expensive disposal.
Fuel filters	Drain fluids for use as product. With approval of local landfill operator, dispose to dumpster, if needed.
Oil filters	Puncture the filter dome and drain it for 24 hours. Put oil drained from filters into a "USED OIL ONLY" container. Keep drained filters in a separate container marked "USED OIL FILTERS ONLY." Locate a scrap metal dealer who will pick up and recycle filters. With approval of local landfill operator, dispose of drained filters to dumpster.
Paint	Accumulate oil-based and water-based paints separately for use or resale. If not recyclable, send accumulations to TSDF for disposal.
Power steering fluid	Same as for used oils
Shop towels/oily rags	Use cloth towels that can be laundered and reused. Accumulate used shop towels in a closed container. Sign up with an industrial laundry service that can recycle towels.
Solvents	Consider using less hazardous solvents or switching to a spray cabinet that doesn't use solvent. Accumulate solvents separately. Consider purchasing a solvent still and recycling solvent on site. Do not mix with used oil. Do not evaporate as a means of disposal.
Transmission oil, differential and rear end fluids	Accumulate in a "USED OIL ONLY" container. Arrange for pickup for off-site recycling.
Used oils; including, crankcase oil, transmission oil, power steering fluid and differential/rear end oil	Keep used oil in a separate container marked "USED OIL ONLY." Do not mix with brake fluid, or used antifreeze. Do not mix with any other waste if burning for heating. Arrange for pickup for off-site recycling.
Windshield washer fluid	Accumulate separately for use or resale. Discharge to on-site sewage disposal, or, if acceptable by the local sewer authority, discharge to sanitary sewer.

* Ecology's Hazardous Waste Program developed this information. The Hazardous Waste Service Directory is now available online at: http://apps.ecy.wa.gov/hwsd/default.htm

Final Draft - Ecy

This page purposely left blank

Final Draft to ECY

NPDES Stormwater Discharge Permits

Summary:

The Environmental Protection Agency's (EPA) National Pollutant Discharge Elimination System Permit (NPDES) regulations for stormwater (40 CFR Parts 122, 123, and 124) became effective on November 16, 1990. Because Washington is an NPDES delegated state, it issues NPDES permits for designated industries, construction sites, and municipalities.

Industrial Stormwater Permits:

USEPA regulations list certain industrial activities (Reference: 40 CFR 122.26(b)(14)) which may need to have a stormwater discharge permit. The following categories (1 through 10) of facilities are considered to be engaging in "industrial activity." They are required by EPA to have a stormwater NPDES permit if they have a stormwater discharge to surface water.

1) Facilities subject to stormwater effluent limitations guidelines, new source performance standards, or toxic pollutant effluent standards under 40 CFR subchapter N (except facilities with toxic pollutant effluent standards under category 11 below).

2) Facilities classified by the Standard Industrial Classification (SIC) system as:

   24 - Lumber and Wood Products except Furniture (except 2434-Wood Kitchen Cabinets)

   26 - Paper and Allied Products (except 265-Paperboard Containers and Boxes, and except 267-Converted Paper and Paperboard Products except Containers and Boxes)

   28 - Chemicals and Allied Products (except 283-Drugs; and 285-Paints, Varnishes, Lacquers, Enamels, and Allied Products)

   29 - Petroleum Refining and Related Industries

   311- Leather Tanning and Finishing

   32 - Stone, Clay, Glass and Concrete Products (except 323-Glass Products, made of Purchased Glass)

   33 - Primary Metal Industries

   3441 - Fabricated Structural Metal Products

   373- Ship and Boat Building and Repair

Final Draft to ECY

3) Facilities classified by the Standard Industrial Classification (SIC) system as:

   10 - Metal Mining

   12 - Coal Mining

   13 - Oil and Gas Extraction

   14 - Mining and Quarrying of Nonmetallic Minerals, except Fuels (Includes active or inactive mining operations (except for areas of coal mining operations no longer meeting the definition of a reclamation area under 40 CFR 434.11(1) or except for areas of non-coal mining operations which have been released from applicable state or federal reclamation requirements by December 17, 1990) and oil and gas exploration, production, processing or treatment operations, or transmission facilities that discharge storm water that has come into contact with any overburden, raw material, intermediate products, finished products, byproducts or waste products located on the site of such operation.

4) Dangerous waste treatment, storage, or disposal facilities, including those that are operated under interim status or a permit under subtitle C of RCRA.

5) Landfills, land application sites and open dumps that receive or have received any industrial wastes (waste that is received from any of the facilities described under this subsection) including those that are subject to regulation under subtitle D of RCRA.

6) Facilities involved in the recycling of materials including metal scrap yards, battery reclaimers, salvage yards and automobile junkyards, including but not limited to those classified as SIC 5015-Wholesale Trade Activities of Motor Vehicle Parts, Used; and SIC 5093-Scrap and Waste Materials.

7) Steam electric power generating facilities, including coal-handling sites.

8) Transportation facilities classified under the following SIC codes, which have vehicle maintenance shops, equipment-cleaning operations, and airport deicing operations.

   40 - Railroad Transportation

   41 - Local and Suburban Transit and Interurban Highway Passenger Transportation

   42 - Motor Freight Transportation and Warehousing (except 4221-Farm Product Warehousing and Storage, 4222-Refrigerated Warehousing and Storage, and 4225-General Warehousing and Storage)

Final Draft to EC

43 - United States Postal Service

44 - Water Transportation

45 - Transportation by Air

5171- Petroleum Bulk Stations and Terminals

9) Treatment works treating domestic sewage or any other sewage sludge or wastewater treatment device or system, used in the storage treatment, recycling, and reclamation of municipal or domestic sewage, including land dedicated to the disposal of sewage sludge that are located within the confines of the facility, with a design flow of 1.0 MGD or more, or required to have an approved pretreatment program under 40 CFR part 403. Not included are farm lands, domestic gardens or lands used for sludge management where sludge is beneficially reused and which are not physically located in the confines of the facility, or areas that are in compliance with section 405 of the Clean Water Act.

10) Construction activity including clearing, grading and excavation activities except: operations that result in the disturbance of less than one acre of total land area which are not part of a larger common plan of development or sale. (See "Construction Stormwater Permits" below)

11) Facilities under the following SIC classifications need to apply for a stormwater NPDES permit only if they are engaged in an "industrial activity" which is exposed to stormwater and they have a point source stormwater discharge to surface water.

20 - Food and Kindred Products

21 - Tobacco Products

22 - Textile Mill Products

23 - Apparel and Other Finished Products made from Fabrics and Similar Materials Wood Kitchen Cabinets

25 - Furniture and Fixtures

265 - Paperboard Containers and Boxes

267 - Converted Paper and Paperboard Products, Except Containers and Boxes

27 - Printing, Publishing and Allied Industries

283 - Drugs

285 - Paints, Varnishes, Lacquers, Enamels, and Allied Products

30 - Rubber and Miscellaneous Plastic Products

31 - Leather and Leather Products (except 311, Leather Tanning and Finishing)

Final Draft to EQ

323 - Glass Products made of Purchased Glass

34 - Fabricated Metal Products, Except Machinery and Transportation Equipment (except 3441, Fabricated Structural Metal Products)

35 - Industrial and Commercial Machinery and Computer Equipment

36 - Electronic and Other Electrical Equipment and Components, Except Computer Equipment

37 - Transportation Equipment (except 373, Ship and Boat Building and Repair)

38 - Measuring, Analyzing, and Controlling Instruments, Photographic, Medical and Optical Goods, Watches and Clocks

39 - Miscellaneous Manufacturing Industries

4221 - Farm Product Warehousing and Storage

4222 - Refrigerated Warehousing and Storage

4225 - General Warehousing and Storage

For the industries identified in SIC categories (1) through (10), a permit is necessary if there is a point source stormwater discharge to a surface water, storm drain which discharges to surface water directly or indirectly, or a municipal storm sewer from any of the following areas of industrial activity: industrial plant yards; immediate access roads and rail lines used or traveled by carriers of raw materials, manufactured products, waste material, or by-products used or created by the facility; material handling sites; refuse sites; sites used for the application or disposal of process waste waters (as defined at 40 CFR part 401); sites used for the storage and maintenance of material handling equipment; sites used for residual treatment, storage, or disposal; shipping and receiving areas; manufacturing buildings; storage areas (including tank farms) for raw materials, and intermediate and finished products; and areas where industrial activity has taken place in the past and significant materials remain and are exposed to storm water.

Industries in Categories 1 through 9 can submit an application and qualify for a Conditional "No Exposure" Certificate.

For the industries identified in SIC category (11), a permit is required for point source discharges from any of the areas that are listed above (except access roads and rail lines of SIC category 11 industries), <u>only if</u> material handling equipment or activities, raw materials, intermediate products, final products, waste materials, by-products, or industrial machinery <u>are exposed to stormwater.</u> However, they must submit a "No Exposure" Certificate to be excused from the permit.

Final Draft to ECY

How and When Do I Apply for A Permit?

Three types of permits are possible. Each has a different application process.

- **General Permit for Industrial Activities:** An application for coverage under the Industrial Stormwater General Permit, referred to as a Notice of Intent (NOI), must be submitted to Ecology.
- **Individual Permit:** An industrial facility that is required to have a stormwater permit may volunteer or be required to apply for an individual permit. An individual permit is a permit that is written for and issued to a specific facility. EPA regulations require that industries not covered under a general permit must apply for an individual stormwater permit. Individual permit applicants for discharges composed entirely of stormwater, must comply with 40 CFR 122.21, and complete EPA forms 1 and 2F. Ecology is prepared to issue individual permits for facilities not already under permit only for exceptional circumstances.
- **Industry-Specific General Permits:** Ecology will consider development of industry-specific general permits, as needed. An industry-specific permit is a permit that can apply to all industries of a similar type. Examples of industry-specific general permits that include stormwater are Sand and Gravel, and Boatyards.

What Does The Industrial Stormwater General Permit Require Industries To Do?

- The development of an Industrial Stormwater Pollution Prevention Plan (SWPPP) by each industry is a key Permit requirement. The Industrial SWPPP requirements include:
- Identifying the potential sources of pollutants that may contaminate stormwater.
- A description and implementation of operational and structural source control BMPs to reduce the stormwater pollutants and comply with the stormwater general permit.
- The permit also includes requirements for:
- Effluent limitations for certain types of industrial facilities, and certain discharges to 303(d) impaired waterbodies;
- Monitoring: All facilities are required to conduct quarterly monitoring and sampling. There are additional monitoring requirements for certain, identified industry groups;
- Application of additional source control and treatment BMPs to control pollutants further if certain “benchmark” levels of pollutants, as identified in the permit, are exceeded;
- Reporting and Recordkeeping;
- Operation and Maintenance

Final Draft to Ecy

Municipalities May Have To Apply for an Industrial Stormwater Permit or Other General Permit

- Some municipalities own or operate an "industrial activity." If that industrial activity has a stormwater discharge to surface waters or storm drains tributary to surface waters, the municipality must apply for the Industrial Stormwater General Permit (or applicable industry-specific general permit, e.g., Sand & Gravel General Permit, Boatyard General Permit, etc.) unless the site qualifies for a Conditional "No Exposure" Certificate. In the latter case, a "no exposure" application form should be submitted.

Examples of industrial activities conducted by municipalities include, but may not be limited to: sand and gravel mining; crushed and broken stone operations; rip rap mining and quarrying; landfills, recycling facilities, land application sites, and open dumps that receive or have received industrial waste; transportation facilities which have vehicle maintenance shops; equipment cleaning; airport de-icing operations; and sewage treatment plants with a design flow above one million gallons per day; and power plants.

Construction Stormwater Permits

Construction sites that will disturb one acre or more and will have a discharge of stormwater from the project site to surface water must apply for Ecology's Construction Stormwater General Permit. The permit requires application of stabilization and structural practices to reduce the potential for erosion and the discharge of sediments from the site. The stabilization and structural practices cited in the permit are similar to the minimum requirements for sedimentation and erosion control in Book 1; refer to the Construction Stormwater General Permit for specific requirements.

Municipal Stormwater Permits

NPDES Permit Program for Municipal Stormwater Discharges

Phase I. Ecology has issued stormwater discharge general permits to the cities of Seattle and Tacoma; the counties of King, Pierce, Clark, and Snohomish; and the discharges from state highways managed by the Department of Transportation within those jurisdictions. These permits contain conditions for compliance with both federal and state requirements and are issued as combined NPDES and State Wastewater Discharge Permits. Ecology reissued the Phase I general permit in 2007 and plans to reissue the next permit in 2012.

Phase II. The EPA adopted Phase II stormwater regulations in December 1999. Those rules identify additional municipalities as subject to NPDES municipal stormwater permitting requirements. Over 100 municipalities in

Final Draft to EPA

Washington are subject to the requirements. Federal regulations required issuance of Phase II permits by December 2002, and required the Phase II communities to submit their stormwater programs to comply with permit requirements by March 2003. Ecology issued the Phase II permits for Eastern Washington and Western Washington in 2007 and plans to reissue these two general permits in 2012.

Final Draft to ECY

This page purposely left blank

Final Draft to ECY

Recommendations for Management of Street Wastes

Introduction

This appendix addresses waste generated from stormwater maintenance activities such as street sweeping and the cleaning of catch basins, and to a limited extent, other stormwater conveyance and treatment facilities. Limited information is available on the characteristics of wastes from detention/retention ponds, bioswales, and similar stormwater treatment facilities. The recommendations provided here may be generally applicable to these facilities, with extra diligence given to waste characterization.

These recommendations do not constitute rules or regulations, but are suggestions for street waste handling, reuse, and disposal using current regulations and the present state of knowledge of street waste constituents. The recommendations address the liquid and solid wastes collected during routine maintenance of stormwater catch basins, detention/retention ponds, ditches and similar storm water treatment and conveyance structures, and street and parking lot sweeping. In addition to these recommendations, end users and other authorities may have their own requirements for street waste reuse and handling.

"Street Wastes" include liquid and solid wastes collected during maintenance of stormwater catch basins, detention/retention ponds, ditches and similar storm water treatment and conveyance structures, and solid wastes collected during street and parking lot sweeping.

"Street Wastes," as defined here, does not include solids and liquids from street washing using detergents, cleaning of electrical vaults, vehicle wash sediment traps, restaurant grease traps, industrial process waste, sanitary sewage, mixed process, or combined sewage/stormwater wastes. Wastes from oil/water separators at sites that load fuel are not included as street waste. Street waste also does not include flood debris, land-slide debris, and chip seal gravel.

Street waste does not ordinarily classify as dangerous waste. The owner of the storm water facility and/or collector of street waste is considered the waste generator and is responsible for determining whether the waste designates as dangerous waste. Sampling to date has shown that material from routine maintenance of streets and stormwater facilities does not classify as dangerous waste (See Table G.6 below). However, it is possible that street waste from spill sites could classify as dangerous waste. Street waste from areas with exceptionally high average daily traffic counts may contain contaminants - such as heavy metals, total

Final Draft to Ecy

petroleum hydrocarbons (TPH), and carcinogenic polycyclic aromatic hydrocarbons (c-PAH) - at levels that limit reuse options.

Contamination in Street Waste Solids

Street waste is solid waste. While street waste from normal street and highway maintenance is not dangerous waste, it is solid waste, as defined under The Solid Waste Management Act (Chapter 70.95 RCW) and under the Solid Waste Handling Standards (Chapter 173-350 WAC). The Solid Waste Management Act gives local health departments primary jurisdiction over solid waste management. Street waste solids may contain contaminants at levels too high to allow unrestricted reuse. There are no specific references in the Solid Waste Handling Standards to facilities managing street waste solids although these facilities typically fit under the section dealing with Piles Used for Storage and Treatment (Section 320). There are no specific references for reuse and disposal options for street wastes in the Solid Waste Handling Standards because they do not apply to clean soils. Clean soils are defined as "soils and dredged material which are not dangerous wastes, contaminated soils, or contaminated dredged material ..." (WAC 173-350-100). Whether or not a soil is a clean soil depends primarily upon the level of contaminants and, to a lesser degree, on the background level of contaminants at a particular location and the exposure potential to humans or other living organisms. Therefore, evaluate both the soil and potential land application sites to determine if a soil is a clean soil.

There is no simple regulatory mechanism available to classify street waste solids for uncontrolled reuse or disposal. Street wastes are defined simply as solid waste. Local health districts have historically used the Model Toxics Control Act Cleanup Regulation (MTCA) Method A residential soil cleanup levels to approximate "clean" and to make decisions on land application proposals. The MTCA regulation is not intended to be directly applied to setting contaminant concentration levels for land application proposals. However, they may provide human health and environmental threat information and a useful framework for such decisions, when used in conjunction with other health and environmental considerations. In addition to MTCA, Ecological Soil Screening Levels from EPA, ODEQ Risk-based concentrations, Toxicological benchmarks from Oak Ridge National Labs, and natural background levels can be considered. Contact the local health department to determine local requirements for making this determination.

Using the old MTCA regulations, many local health departments have set criterion of 200 mg/Kg Total Petroleum Hydrocarbons (TPH) for diesel and heavy fuel oils as a threshold level for clean soil. Using the new MTCA terrestrial ecological evaluation procedures, allowable TPH levels for land application could range from 200 – 460, depending on site characteristics and intended land use. Street waste sampling has historically yielded TPH

Final Draft to Ecy

values higher than 200 mg/kg for hydrocarbons in the diesel and heavy oil range. These values typically reflect interference from natural organic material and, to a lesser extent, relatively immobile petroleum hydrocarbons. The mobile hydrocarbons that are of concern for ground water protection are generally not retained with street waste solids. Ecology's Manchester Lab has developed an analytical method to reduce the problem of natural organic material being included in the TPH analysis for diesel and heavier range hydrocarbons. This method, called NWTPH-Dx, reduces the background interference associated with vegetative matter by as much as 85% to 95%. However, even with the new methodology, TPH test results for street waste may still be biased by the presence of natural vegetative material and may still exceed 200 mg/kg. Where the laboratory results report no 'fingerprint' or chromatographic match to known petroleum hydrocarbons, the soils should not be considered to be petroleum contaminated soils. Table G.1 lists Typical TPH levels in street sweeping and catch basin solids.

Table G.1 - Typical TPH Levels in Street Sweeping and Catch Basin Solids

Reference:	Street Sweeping (mg/kg)	Catch Basin Solid (mg/kg)
Snohomish County (1) (Landau 1995)	390 – 4300	
King County (1) (Herrera 1995)		123 – 11049 (Median 1036)
Snohomish County & Selected Cities (1) (W & H Pacific, 1993)	163 - 1500 (Median 760)	163 – 1562 (Median 760)
City of Portland (2)) (Bresch)		MDL – 1830 (Median – 208)
City of Seattle – Diesel Range(2) (Hererra 2009)	330-520	780-1700
City of Seattle – Motor Oil(2) (Herrera 2009)	2000-2800	3500-7000
Oregon (1) (Collins; ODOT 1998) Oregon (3) (Collins; ODOT 1998)	1600 – 2380 98 - 125	

(1) Method WTPH 418.1; does not incorporate new methods to reduce background interference due to vegetative material
(2) Method NWTPH-Dx
(3) Method WTPH – HCID

Final Draft to ECY

Street waste solids frequently contain levels of carcinogenic PAHs (c-PAH) that make unrestricted use inappropriate. This is complicated further by analytical interference caused by organic matter that raises practical quantitation or reporting limits. To greatly reduce the level of interference, the use of US EPA Test Method 8270, incorporating the silica gel cleanup

step, is recommended. The calculated c-PAH value can vary greatly depending upon how non-detect values are handled. The new MTCA Method A criterion for c-PAH is 0.1 mg/kg (the sum of all seven c-PAH parameters multiplied by the appropriate toxicity equivalency factor)) for unrestricted land uses. The MTCA criteria for soil cleanup levels for industrial properties is 2.0 mg/kg. Following this guidance, most sites where street wastes could be reused as soil will be commercial or industrial sites, or sites where public exposure will be limited or prevented. See Table G.2 for typical c-PAH values in Street Waste Solids and Related Materials. See Table G.3 for typical metals concentrations in Catch Basin Sediments.

Table G.2 - Typical c-PAH Values in Street Waste Solids and Related Materials

Sample Source	**City of Everett**					**WSDOT**	
Analyte	**Street Sweepings**	**Soil**	**3-Way Topsoil**	**Vactor Solids**	**Leaf & Sand**	**Sweepings – Fresh**	**Sweepings Weathered**
Benzo(a)anthracene	0.1U	0.076U	0.074U	0.21	0.45	0.56	0.40
Chrysene	0.14	0.09	0.074U	0.32	0.53	0.35	0.35
Benzo(b)fluoranthene	0.11	0.076U	0.074U	0.27	0.52	0.43	0.51
Benzo(k)fluoranthene	0.13	0.076U	0.074U	0.25	0.38	0.39	0.40
Benzo(a)pyrene	0.13	0.076U	0.074U	0.26	0.5	0.41	0.33U
Indeno(1,2,3-cd)pyrene	0.1U	0.076U	0.074U	0.19	0.39	NR	NR
Dibenzo(a,h)anthracene	0.1U	0.076U	0.074U	0.081	0.12	0.39	0.33U
Revised MTCA Benzo(a)pyrene [ND=PQL]	0.215	0.134	0.134	0.388	0.727	0.708	0.597
Benzo(a)pyrene [ND=1/2 PQL]	0.185	0.069	0.067	0.388	0.727	0.708	0.366
Benzo(a)pyrene [See * below]	0.185	0.069	0	0.388	0.727	0.708	0.366
Benzo(a)pyrene [ND=0]	0.155	0.001	0	0.388	0.727	0.708	0.135

*If the analyte was not detected for any PAH, then ND=0; If analyte was detected in at least 1 PAH, then ND=1/2PQL; If the average concentration (using ND=1/2 PQL) is greater than the maximum detected value, then ND=Maximum value.

The new Method A soil cleanup level for unrestricted land use is 0.1 mg/Kg for BAP. (WAC 173-340-900, Table 740-1)

The new Method A soil cleanup level for industrial properties is 2 mg/Kg for BAP. (WAC 173-340-900, Table 745-1)

Final Draft to Ecy

Table G.3 - Typical Metals Concentrations in Catch Basin Sediments

PARAMETER	Ecology 1993	Thurston 1993	King County 1995	King County 1995	City of Seattle 2003 through 2011
METALS; TOTAL (mg/kg)	**(Min – Max)**	**(Min – Max)**	**(Min - Max)**	**Mean**	**Min- Max (Mean)**
As	<3 -- 24	.39 -- 5.4	4 – 56	0.250	<5 – 50 (9.3)
Cd	0.5 -- 2.0	< 0.22 -- 4.9	0.2 – 5.0	0.5	
Cr	19 -- 241	5.9 -- 71	13 - 100	25.8	
Cu	18 -- 560	25 -- 110	12 - 730	29	9.1 - 3,280 (166)
Pb	24 -- 194	42 -- 640	4 – 850	80	3 - 3,690 (154)
Ni	33 -- 86	23 -- 51	14 – 41	23	
Zn	90 -- 558	97 -- 580	50 – 2000	130	44 - 4,170 (479)
Hg	.04 -- .16	.024 -- .193			<0.03 - 3.8 (0.16)

Permitting of street waste treatment and storage facilities as solid waste handling facilities by the local health department is required. Under the Solid Waste Management Act, local health departments have primary jurisdiction over solid waste management.

Street waste handling facilities are subject to the requirements of the Solid Waste Handling Standards. Specific requirements depend upon the manner in which the waste is managed. Most facilities are permitted under the section dealing with Piles Used for Storage and Treatment (Section 320).

For most facilities, permit requirements include a plan of operation, sampling, record keeping and reporting, inspections, and compliance with other state and local requirements. The plan of operation should include a procedure for characterization of the waste and appropriate reuse and disposal options, consistent with the recommendations in this document and applicable federal, State and local requirements.

Ecology suggests a street waste site evaluation (see sample at end of this appendix) for all street waste as a method to identify spill sites or locations that are more polluted than normal. Ecology based the disposal and reuse options listed below on characteristics of routine street waste and are not appropriate for more polluted wastes. The collector of street waste should evaluate it for its potential to be classified as dangerous waste. The collector should also be aware that this waste may not meet end users requirements.

Street waste suspected to be dangerous waste should not be collected with other street waste. Material in catch basins with obvious contamination (unusual color, staining, corrosion, unusual odors, fumes, and oily sheen) should be left in place or segregated until tested. Base testing activities on probable contaminants. Street waste suspected to be dangerous waste should be collected and handled by someone experienced

Final Draft to FCY

in handling dangerous waste. If collecting potential dangerous waste because of emergency conditions, or if the waste becomes suspect after it is collected, it should be handled and stored separately until a determination as to proper disposal is made. Street waste treatment and storage facilities should have separate "hot load" storage areas for such waste. **Dangerous Waste** includes street waste known or suspected to be dangerous waste. This waste must be handled following the Dangerous Waste Regulations (Chapter 173-303 WAC) unless testing determines it is not dangerous waste.

Spills should be handled by trained specialists. Public works maintenance crews and private operators conducting street sweeping or cleaning catch basins should have written policies and procedures for dealing with spills or suspected spill materials. Emergency Spill Response telephone numbers should be immediately available as part of these operating policies and procedures.

The end recipient of street waste must be informed of its source and may have additional requirements for its use or testing that are not listed here. This document is based primarily on average street waste's chemical constituents and their potential affect on human health and the environment. There are physical constituents (for example, broken glass or hypodermic needles) or characteristics (for example, fine grain size) that could also limit reuse options. Additional treatment such as drying, sorting, or screening may also be required, depending on the needs and requirements of the end user.

Street waste treatment and storage facilities owned or operated by governmental agencies should be made available to private waste collectors and other governmental agencies on a cost recovery basis. Proper street waste collection and disposal reduces the amount of waste released to the environment. The operators of street waste facilities should restrict the use of their facilities to certified and/or licensed waste collectors who meet their training and liability requirements.

The use of street waste solids under this guidance should not lead to designation as a dangerous waste site, requiring cleanup under MTCA. Exceeding MTCA Method A unrestricted land use cleanup levels in street waste and products made from street waste, does not automatically make the site where street waste is reused a cleanup site. A site is reportable only if "-a release poses a threat to human health or the environment-" (Model Toxic Control Act). The reuse options proposed below are designed to meet the condition of not posing a threat to human health or the environment.

Testing of street waste solids will generally be required as part of a plan of operation that includes procedures for characterization of the waste. Testing frequency, numbers of samples, parameters to be analyzed, and contaminant limit criteria should all be provided as part of an

Final Draft to Ecy

approved plan of operation. However, street sweepings that consist primarily of leaves, pine needles, branches, and grass clippings do not require testing. Tables G.4 and G.5 below provide some recommended parameters and sampling frequencies for piles of street waste solids from routine street maintenance. These are provided as guidance only, and are intended to assist the utility and the local health department in determining appropriate requirements. Sampling requirements may be modified, over time, based on accumulated data. When the material is from a street waste facility or an area that has never been characterized by testing, the test should be conducted on a representative sample before co-mingling with other material. Testing in these instances would be to demonstrate that the waste does not designate as dangerous waste and to characterize the waste for reuse. At a minimum, the parameters in Table G.4 are recommended for these cases. Note that it will generally not be necessary to conduct TCLP analyses when the observed values do not exceed the recommended values in Table G.4. Table G.6 illustrates some observed relationships between total metals and TCLP metals values.

For further information on testing methods and sampling plans, refer to:

- SW 846 (US EPA, Office of Solid Waste, Test Methods for Evaluating Solid Wastes, 3rd Ed.) and
- Standard Methods for the Examination of Water and Wastewater (American Public Health Association, et al., 18th Edition 1992)

Table G.4 - Recommended Parameters and Suggested Values for Determining Reuse & Disposal Options

Parameter	Suggested Maximum Value
Arsenic, Total	20.0 mg/kg (a)
Cadmium, Total	2.0 mg/kg (b)
Chromium, Total	42 mg/kg (c)
Lead, total	250 mg/kg (d)
Nickel	100 mg/kg (e)
Zinc	270 mg/kg (e)
Mercury (Inorganic)	2.0 mg/kg (f)
PAHs (Carcinogenic)	0.1 – 2.0 mg/kg (see Note at (g) below)
TPH (Heavy Fuel Oil)	2,000 mg/kg (see Note at (h) below)
TPH (Diesel)	200 mg/kg (see Note at (i) below)
TPH (Gasoline)	100 mg/kg (j)
Benzene	0.03 mg/kg (j)
Ethylbenzene	6 mg/kg (j)
Toluene	7 mg/kg (j)
Xylenes (Total)	9 mg/kg (j)

(a) Arsenic: from MTCA Method A - Table 740-1: Soil cleanup levels for unrestricted land uses
(b) Cadmium: from MTCA Method A – Table 740-1: Soil cleanup levels for unrestricted land uses.
(c) Chromium; from MTCA Method A - Table 740-1: Soil cleanup levels for unrestricted land uses
(d) Lead; from MTCA Method A – Table 740-1: Soil cleanup levels for unrestricted land uses
(e) Nickel and Zinc; from MTCA Table 749-2: Protection of Terrestrial Plants and Animals
(f) Mercury; from MTCA Method A – Table 740-1: Soil cleanup levels for unrestricted land uses

Final Draft to ECY

(g) PAH-Carcinogenic; from MTCA Method A – Table 740-1: Soil cleanup levels for unrestricted land uses and Table 745-1, industrial properties, based on cancer risk via direct contact with contaminated soil (ingestion of soil) in residential land use situations and commercial/industrial land uses. Note: The local health department may permit higher levels as part of a Plan of Operation, where they determine that the proposed end use poses little risk of direct human contact or ingestion of soil.
(h) TPH (Heavy Fuel Oil); from MTCA Method A – Table 740-1: Soil cleanup levels for unrestricted land uses
(i) TPH (Diesel): from MTCA Table 749-3: Protection of Terrestrial Plants and Animals..
(j) BETX; from MTCA Method A - Table 740-1: Soil cleanup levels for unrestricted land uses.

Table G.5 - Recommended Sampling Frequency for Street Waste Solids

Cubic Yards of Solids	Minimum Number of Samples
0 – 100	3
101 – 500	5
501 – 1000	7
1001 – 2000	10
>2000	10 + 1 for each additional 500 cubic yards

Modified from Ecology's Interim Compost Guidelines

Table G.6 - Pollutants in Catch Basin Solids – Comparison to Dangerous Waste Criteria

PARAMETER	Range of Values in Catch Basin Waste	Range of Values in Catch Basin Waste	Dangerous Waste Criteria
METALS	Total Metals (mg/kg)	TCLP Metals (mg/kg)	TCLP values (mg/l)
As	<3 - 56	< .02 - 0 .5	5.0
Cd	<.22 - 5	.0002 - .03	1.0
Cr	5.9 - 241	.0025 - .1	5.0
Cu	12 - 730	.002 -- .88	none
Pb	4 - 850	.015 -- 3.8	5.0
Ni	23 - 86	< .01 -- .36	none
Zn	50 - 2000	.04 -- 6.7	none
Hg	.02 - .19	.0001 -- .0002	0.2

Data from Thurston County (Thurston County 1993), King County (Herrera 1995) and Ecology (Serdar; Ecology 1993).

For street waste not exceeding the suggested maximum values in Table G.4, Ecology recommends the following street waste solids reuse and disposal options:

- Compost street sweepings that consist primarily of leaves, pine needles and branches, and grass cuttings from mowing grassy swales. Remove litter and other foreign material prior to composting or the composting facility must provide for such removal as part of the process. Dispose of the screened trash is solid waste at an appropriate solid waste handling facility.

Final Draft to ECY

- It is possible to reuse coarse sand screened from street sweeping after recent road sanding, for street sanding, providing there is no obvious contamination from spills. The screened trash is solid waste and must be disposed of at an appropriate solid waste handling facility.
- Screen roadside ditch cleanings, not contaminated by a spill or other release and not associated with a stormwater treatment system such as a bioswale, to remove litter and separate into soil and vegetative matter (leaves, grass, needles, branches, etc.). The soils from these activities are typically unregulated as solid waste. Ditching material that may be contaminated must be stored, tested, and handled in the same manner as other street waste solids. It is the generator's responsibility to visually inspect and otherwise determine whether the materials may be contaminated.
- Construction street wastes; solids collected from sweeping or in storm water treatment systems at active construction sites - may be placed back onto the site that generated it, or managed by one on the methods listed below, provided that it has not been contaminated as a result of a spill. For concrete handling at construction site, refer to BMP C151 in Book 2.
- Use screened street waste soils as feedstock materials for topsoil operations. Reserve this option for street waste soils with very low levels of contaminants. Evaluate the allowable level of contaminants based on the proposed use of the soil. At a minimum, the contaminate level in the soil should be below established action levels for in situ soils. Do not dilute street waste soils with clean soils or composted material as a substitute for treatment or disposal. There may be unscreened physical contaminants (for example, glass, metal, nails, etc.) in street waste. Where present, these contaminants in street waste could preclude its use as feedstock material for topsoil operations.
- Fill in parks, play fields, golf courses and other recreational settings, where direct exposure by the public is limited or prevented. One way to accomplish is to cover the fill with sod, grass or other capping material to reduce the risk of soil ingestion. Evaluate the level of contaminants in the street waste to ensure that the soils meet the definition of clean soils when used in this manner.
- Fill in commercial and industrial areas, including soil or top dressing for use at industrial sites, roadway medians, airport infields and similar sites, where there is limited direct human contact with the soil, and stabilize the soils with vegetation or other means. Evaluate the level of contaminants in the street waste to ensure that the soils meet the definition of clean soils when used in this manner.
- Top dressing on roadway slopes, road or parking lot construction material and road subgrade, parking lot subgrade, or other road fill.

Final Draft to Ecy

Evaluate the level of contaminants in the street waste to ensure that the soils meet the definition of clean soils when used in this manner.

- Daily cover or fill in a permitted municipal solid waste landfill provided the street waste solids have been dewatered. Street waste solids may be acceptable as final cover during a landfill closure. Consult the local health department and landfill operator to determine conditions of acceptance.
- Treatment at a permitted contaminated soil treatment facility.
- Recycling through incorporation into a manufactured product, such as Portland cement, prefabricated concrete, or asphalt. Consult the facility operator to determine conditions of acceptance.
- Other end-use as approved by the local health department
- Disposal at an appropriate solid waste handling facility.

For street waste that exceeds the suggested maximum values in Table G.4, Ecology recommends the following street waste solids reuse and disposal options:

- Treatment at a permitted contaminated soil treatment facility.
- Recycling through incorporation into a manufactured product, such as Portland cement, prefabricated concrete, or asphalt. Consult the facility operator to determine conditions of acceptance.
- Other end-use as approved by the local health department
- Disposal at an appropriate solid waste handling facility.

Street Waste Liquids

General Procedures:

Street waste collection should emphasize retention of solids in preference to liquids. Street waste solids are the principal objective in street waste collection and are substantially easier to store and treat than liquids.

Street waste liquids require treatment before their discharge. Street waste liquids usually contain high amounts of suspended and total solids and adsorbed metals. Treatment requirements depend on the discharge location.

The entity responsible for operation and maintenance of the system must approve discharges to sanitary sewer and storm sewer systems. Ecology will not generally require waste discharge permits for discharge of stormwater decant to sanitary sewers or to stormwater treatment BMPs constructed and maintained in accordance with Ecology's Stormwater

Final Draft to EPA

Management Manual for Western Washington (See Volume 5, Sections 7 through 12 for further detail on approved BMPs).

Follow the following required order of preference, for disposal of catch basin decant liquid and water removed from stormwater treatment facilities.

1. **Discharge of catch basin decant liquids to a municipal sanitary sewer connected to a Public Owned Treatment Works (POTW).** Discharge to a municipal sanitary sewer requires the approval of the sewer authority. Approvals for discharge to a POTW will likely contain pretreatment, quantity, and location conditions to protect the POTW. Following the local sewer authority's conditions is a permit requirement.
2. **Discharge of catch basin decant liquids may be allowed into a Basic or Enhanced Stormwater Treatment BMP, if option 1 is not available.** Only discharge liquid collected from cleaning catch basins and stormwater treatment wetvaults back into the storm sewer system under the following conditions:

- The preferred disposal option of discharge to sanitary sewer is not reasonably available.
- The discharge is to a Basic or Enhanced Stormwater Treatment Facility. If pretreatment does not remove visible sheen from oils, the treatment facility must be able to prevent the discharge of oils causing a visible sheen.
- The discharge is as near to the treatment facility as is practical, to minimize contamination or recontamination of the collection system.
- The storm sewer system owner/operator has granted approval and has determined that the treatment facility will accommodate the increased loading. Part of the approval process may include pretreatment conditions to protect the treatment BMP. Following local pretreatment conditions is a requirement of this permit.
- Ecology must approve in advance flocculants for the pretreatment of catch basin decant liquids. The liquids must be non-toxic under the circumstances of use.

The discharger shall determine if reasonable availability of sanitary sewer discharge exists, by evaluating such factors as distance, time of travel, load restrictions, and capacity of the stormwater treatment facility.

3. **Operators may return water removed from stormwater ponds, vaults, and oversized catch basins to the storm sewer system.** Stormwater ponds, vaults, and oversized catch basins contain substantial amounts of liquid, which hampers the collection of solids and poses problems in hauling the removed waste away from the site.

Final Draft to ECY

Water removed from these facilities may be discharged back into the pond, vault, or catch basin provided:

- Operators may discharge clear water removed from a stormwater treatment structure directly to a down gradient cell of a treatment pond or into the storm sewer system.
- Turbid water may be discharged back into the structure it was removed from if the removed water has been stored in a clean container (eductor truck, Baker tank, or other appropriate container used specifically for handling stormwater or clean water); and there will be no discharge from the treatment structure for at least 24 hours.
- The storm sewer system owner/operator must approve the discharge.

Table G.7 - Typical Catch Basin Decant Values Compared to Surface Water Quality Criteria

PARAMETER	**State Surface Water Quality Criteria**		**Range of Values Reported**	**Range of Values Reported**
METALS	**Freshwater Acute (ug/l – dissolved metals)**	**Freshwater Chronic (ug/l – dissolved metals)**	**Total Metals (ug/l)**	**Dissolved Metals (ug/l)**
Arsenic	360	190	100 – 43000	60 - 100
Cadmium*	2.73	0.84	64 - 2400	2 - 5
Chromium (total)			13 -- 90000	3 - 6
Chromium (III)*	435	141		
Chromium (VI)	0.5	10		
Copper*	13.04	8.92	81 -- 200000	3 - 66
Lead*	47.3	1.85	255 -- 230000	1 - 50
Nickel*	1114	124	40 -- 330	20 - 80
Zinc*	90.1	82.3	401 -- 440000	1900 - 61000
Mercury	2.10	.012	0.5 -- 21.9	

**Hardness dependent; hardness assumed to be 75 mg/l*

Table G.8 - Typical Values for Conventional Pollutants in Catch Basin Decant

PARAMETER	**Ecology 1993**	**(Min - Max)**	**King County 1995**	**(Min - Max)**
Values as mg/l; except where stated	**Mean**		**Mean**	
pH	6.94	6.18 - 7.98	8	6.18 - 11.25
Conductivity (umhos/cm)	364	184 - 1110	480	129 - 10,100
Hardness (mg/l CaCO3)	234	73 - 762		
Fecal Coliform (MPN/100 ml)	3000			
BOD	151	28 - 1250		
COD	900	120 - 26,900		
Oil & Grease	11	7.0 - 40	471	15 - 6242
TOC	136	49 - 7880	3670	203 - 30,185
Total Solids	1930	586 - 70,400		
Total Dissolved Solids	212	95 - 550		
Total Suspended Solids	2960	265 - 111,000		
Settleable Solids (ml/l/hr)	27	2 - 234	57	1 - 740
Turbidity (ntu)	1000	55 - 52,000	4673	43 - 78,000

Final Draft to Ecy

Table G.9 - Catch Basin Decant Values Following Settling[1]

Parameter; Total Metals in mg/l	Portland – Inverness Site Min - Max	King County - Renton Min - Max	METRO Pretreatment Discharge Limits
Arsenic	.0027 .015	< MDL – 0.12	4
Cadmium	.0009 - .0150	< MDL – 0.11	0.6
Chromium	.0046 - .0980	.017 – .189	5
Copper	.015 - .8600	.0501 – .408	8
Lead	.050 – 6.60	.152 – 2.83	4
Nickel	.0052 - .10	.056 - .187	5
Silver	.0003 - .010	< MDL	3
Zinc	.130 – 1.90	.152 – 3.10	10
Settleable Solids; ml/L	No Data	.02 - 2	7
Nonpolar FOG	5.7 - 25	5 - 22	100
Ph (std)	6.1 – 7.2	6.74 – 8.26	5.0 - 12.0
TSS	2.8 - 1310		
Recorded Total Monthly Flow; Gallons	Data not available	31,850 - 111,050	
Recorded Max. Daily Flow; Gallons	Data not available	4,500 - 18,600	25,000 GPD
Calculated Average Daily Flow; GPD	Data not available	1517 - 5428	

1) Data from King County's Renton Facility (data from 1998 – 199) and the City of Portland's Inverness Site (data from 1999 – 2001); detention times not provided

Site Evaluation

Ecology suggests use of a site evaluation as method to identify spill sites or locations that potentially contain dangerous wastes.

The site evaluation will aid in determining if waste is a dangerous waste and in determining what to test for if dangerous waste is suspected. The site evaluation will also help to determine if the waste does not meet the requirements of the end users.

There are three steps to a site evaluation:

1. An **historical review** of the site for spills, previous contamination and nearby toxic cleanup sites and dangerous waste and materials.

   The historical review will be easier if done on an area wide basis prior to scheduling any waste collection. The historical review should be more thorough for operators who never collected waste at a site before. At a minimum, the historical review should include operator knowledge of the area's collection history or records kept from previous waste collections.

   Private operators should ask the owner of the site for records of previous contamination and the timing of the most recent cleaning. Ecology's Hazardous Substance Information Office maintains a Toxic Release Inventory and a "Facility Site" webpage, tracking more than

Final Draft to ECY

15,000 sites. This information is available from Ecology through the Internet at http://www.ecy.wa.gov/epcra/chemical_summary_2008/tri_intro_numbers.html or by calling a toll-free telephone number (1-800-633-7585). The webpage allows anyone with web-access to search for facility information by address, facility name, town, zip code, and SIC code, etc. It lists why the Department of Ecology is tracking each one (NPDES, TSCA, RCRA, Clean Air Act, etc.), as well as who to call within Ecology to find out more about the given facility. EPA's toxic release website is http://iaspub.epa.gov/triexplorer/tri_release.chemical

2. An area visual inspection for potential contaminant sources such as a past fire, leaking tanks and electrical transformers, and surface stains.

   Evaluate the area around the site for contaminant sources prior to collection of the waste. The area visual inspection may be done either as part of multiple or as single site inspections. If the inspection finds a potential contaminant source, delay the waste collection until the potential contaminant is assessed.

   A second portion of the area visual inspection is a subjective good housekeeping evaluation of the area. Locations with poor housekeeping commonly cut corners in less obvious places. Inspect these sites in greater detail for illegal dumping and other contamination spreading practices.

3. **A waste and container inspection** before and during collection.

   The inspection of the waste and catch basin or vault is the last and perhaps most critical step in the site evaluation.

   For example, if the stormwater facility has an unusual color in or around it, then there is a strong possibility that someone dumped something into it. Some colors to be particularly wary of are yellow-green from antifreeze dumping and black and rainbow sheen from oil and/or grease dumping. In addition, if the inspector observes any staining or corrosion, then a solvent may have been dumped.

   Fumes are also good indicators of potential dangerous or dangerous waste. Avoid deliberate smelling of catch basins for worker safety, but suspicious odors may be encountered from catch basins thought to be safe. Some suspicious odors are rotten eggs (hydrogen sulfide is present), gasoline or diesel fumes, or solvent odors. If unusual odors are noted, contact a dangerous waste inspector before cleaning the basin.

   Finally, operator experience is the best guide to avoid collection of contaminated waste.

Final Draft to Ecy

Resource Materials – Management of Street Wastes

Austin, City of, Removal Efficiencies of Stormwater Control Structures. Environmental and Conservation Services Department, 1990.

ASTM D2487 - 06 (2006). Standard Practice for Classification of Soils for Engineering Purposes (Unified Soil Classification System). American Society for Testing Materials.

Binkhorst, G.K. and Robbins, G.A. (1998). Conducting and Interpreting Slug tests in Monitoring Wells with Partially Submerged Screens. Ground Water, Volume 36, Number 2, pp. 225-229.

British Petroleum (BP) Corporation of North America (2002). Monitoring Well Comparison Study: An Evaluation of Direct Push vs. Conventional Monitoring Wells. USEPA Office of Underground Storage Tanks, EPA Regions IV and V.

City of Portland Vactor Waste Decant Data, Personal Communication with Katie Bretsch, April 2000

City of Los Angeles website, web page relating to pools and disposal of their associated waters http://www.lacitysan.org/wpd/siteorg/education/bmps/swimpools.htm

County of Napa website, web page relating to pools, spas, fountains and the disposal of their associated waters http://www.countyofnapa.org/Pages/DepartmentContent.aspx?id=4294969083

Campbell, Robert, Street Waste Characterization Testing Program, VTP-1, Snohomish County Public Works Maintenance & Operations Division, March 1994.

Cohen, et al., (1992). Evaluation of Visual Methods to Detect NAPL in soil and Water. Ground Water Monitoring and Remediation, Fall, 1992, pp. 132-141.

Collins, Jay, Oregon Department of Transportation, Street Waste Issues and Options FHWA-OR-RD-99-05, July 1998

Conant et. al. (1995). Effect of Well Screen Placement on Recovery of Vertically Stratified Contaminants. Ground Water, Volume 33, Number 2, pages 455-456.

Dahlen et al. (2003). Impacts to Groundwater Resources in Arizona from Leaking Underground Storage Tanks (LUSTS). Arizona State University, in Cooperation with the Arizona Department of Environmental Quality (ADEQ).

Ecology, TPH Draft Guidance Publication 10-09-057..

Ecology, Analytical Methods for Petroleum Hydrocarbons, Publication No. ECY 97-602, June 1997.

Ecology, Dangerous Waste Regulations, Chapter 173-303 WAC.

Final Draft to ECY

Ecology, Discussion Draft - Recommendations for Management of Street Waste, June 1999

Ecology, Solid Waste Handling Standards, Chapter 173-350 WAC..

Ecology, Guidance for Remediation of Petroleum Contaminated Soils, pub 91-30, 1994.

Ecology, Model Toxics Control Act (MTCA) Cleanup Regulations, Chapter l73-340 WAC

Ecology, Water Quality Standards For Surface Waters of the State of Washington, Chapter 173-201A.

Fitzgerald, J. (1993). Onsite Analytical Screening of Gasoline Contaminated Media Using a Jar Headspace Procedure: in Principles and Practices for Petroleum Contaminated Soils. E.J. Calabrese and P.T. kostecki, eds. Lewis Publishers: Boca Raton, Florida. Pp. 49-66.

Hazardous Waste Management Act of 1976, Chapter 70.105 RCW

Henebry, B.J. and Robbins, G.A. (2000). Reducing the Skin Effect on Hydraulic Condictivity Determinations in Multilevel Samplers Installed with Direct Push Methods. Ground Water, Volume 38, Number 6, pp. 883-886.

Herrera Environmental Consultants, Inc., King County Maintenance Waste Disposal Characterization Study, prepared for King County Surface Water Management Division, January Draft, 1995.

Herrera Environmental Consultants, Inc., Street Truck Operations and Disposal Practices, 1991.

Holz, Thomas, Street Waste Disposal, Thurston County, Washington: Final Engineering Report and One Year Certification, Grant No. Tzx 91-129, May, 1994.

Hutchins, S.R., and S.D. Acree (2000). Groundwater Sampling Bias Observed in Shallow, Conventional Wells. Ground Water Monitoring and Remediation, Volume 20, Number 1, Pages 86-93.

Jacobson, Michael, Data Summary of Catch Basin and Vactor Waste Contamination in Washington State, Final Report, Center for Urban Water Resources, University of Washington, 1993.

Kaplan et. al. (1996) Patterns of Chemical Changes During Environmental Alteration of Hydrocarbon Fuels. Ground Water. Volume 28, Number 2, pp. 244-252.

King County, Vactor Waste Disposal Plan, King County Surface Water Management Division, Water Quality Unit, 1994.

King County's Renton Facility Decant Data, Personal Correspondence with Jerry Creek, and Susan Turner, June 1999

Landau Associates, Inc. Snohomish County Street Waste Characterization, Final Report, December 1995

Final Draft to ECY

Marinelli, F. and Durnford, D.S. (1995). LNAPL Thickness in Monitoring Wells Considering Hysteresis and Entrapment. Ground Water, Volume 34, Number 3, pp. 405-414

Kram, M. D. Lorenzana, J. Michaelsen and E. Lory (2001), Performance Comparison: Direct Push Wells versus Drilled Wells. Naval Facilities Engineering Command, Technical Report TR-2120-ENV.

North Dakota Department of Health (2002). Guideline: Procedures for Headspace Analysis of Gasoline Contaminated Soils. Division of Waste Management—Underground Storage Tank Program.

Pitt, R. and P. Bissonnette, Bellevue Urban Runoff Program; Summary Report, Prepared for City of Bellevue Storm and Surface Water Utility,1984.

Pitt, R., 1985, Characterizing and Controlling Urban Runoff through Street and Sewer Cleaning, EPA/600/2-85/038

Pond, Rodney, South Base Pond Report - The Response of Wetland Plants to Stormwater Runoff From a Transit Base, Municipality of Metropolitan Seattle Publication 775, 1993.

Robbins, G.A., G.K. Binkhorst, M.A. Butler, B.K. Bradshaw, C. Troskosky, and K. Billick (1996). Recommended Guidelines for Applying Field Screening Methods in Conducting Expedited Site Investigations at Underground Storage Tank Sites in Connecticut. For the Connecticut Department of Environmental Protection.

Robbins, G.A., Butler, M. and Zack, P. (1997). Recommended Guidelines for Multilevel Sampling of Soil and Groundwater in Conducting Expedited Site Investigations at Underground Storage Tanks Sites in Connecticut. Developed for the LUST Trust Fund Program, Connecticut Department of Environmental Protection.

Robbins, G.A. (2000). Expedited Site Assessment: The CD. Prepared for the Connecticut Department of Environmental Protection (Excel File "constant.xls").

Schueler, Thomas, R., Pollutant Dynamics of Pond Muck, Wat. Prot. Techniques, 1 (2). Summer 1994

Seattle Public Utilities and Herrera Environmental Consultants, Inc. Seattle Street Sweeping Pilot Study, April 22, 2009 http://www.seattle.gov/util/groups/public/@spu/@drainsew/documents/webcontent/spu01_005046.pdf

Serdar, Dave, Ecology, Contaminants in Vactor Truck Wastes, April 1993

State of Oregon Department of Environmental Quality, Fact Sheet: Disposing of Chlorinated Water from Swimming Pools and Hot Tubs, Updated 1/10/12, on website: http://www.deq.state.or.us/wq/pubs/factsheets/wastewater/bmpchlorwaterdisp.pdf

Final Draft to ECY

Thurston County Environmental Health Division, (Environmental Health Division-Unpublished data), 1993

Thurston County Environmental Health Division, Report on Street Facility Monitoring Grant Tax No. 91-129, April 1993

TPH Criteria Working Group (1999). Volume 4: Development of Fraction Specific Reference Doses (RFDs) and Reference Concentration (RFCs) for Total Petroleum Hydrocarbons (TPH). Amherst Scientific Publishers. http://www.aehs.com/publications/catalog/contents/tph.htm

TYMCO, Inc. Best Management Practices - Street Sweeping, Waco, Texas, 1993.

USEPA (2006). Guidance on Systematic Planning using the Data Quality Objective Process, EPA QA/G-4". EPA/240/B-06/001. http://www.epa.gov/quality1/qs-docs/g4-final.pdf

USEPA (1996). How to Effectively Recover Free Product at Leaking Underground Storage Tank Sites: A Guide for State Regulators. EPA 510-R-96-001. Chapter III: Correction to Compute Hydraulic Head In Wells Containing Free Product Behavior of Hydrocarbons in the Subsurface, Exhibit III-10, p. III-16 http://www.epa.gov/oust/pubs/fprg.htm

US Environmental Protection Agency, "Methods for Evaluating Solid Waste, Physical/ Chemical

US Environmental Protection Agency, Test Methods for Evaluating Solid Wastes, (SW-846), 3rd Edition, 1986.

W&H Pacific, Inc., Street and Street Sweeping Waste Characteristics Snohomish County, Washington, February 1994.

Final Draft to ECY