BMP C233 – Silt Fence

Silt fencing prevents mud from flowing off the job site and into streams and rivers.

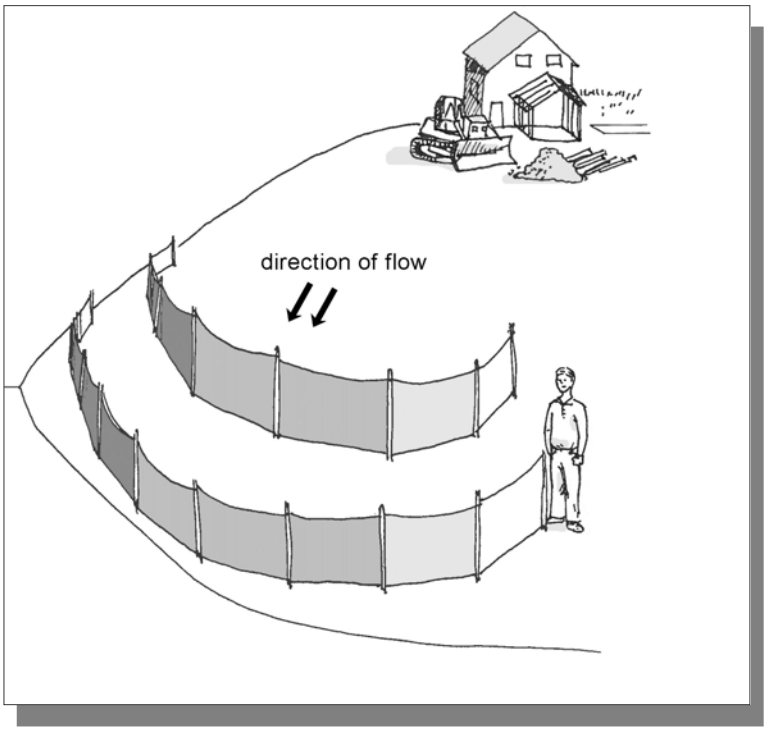

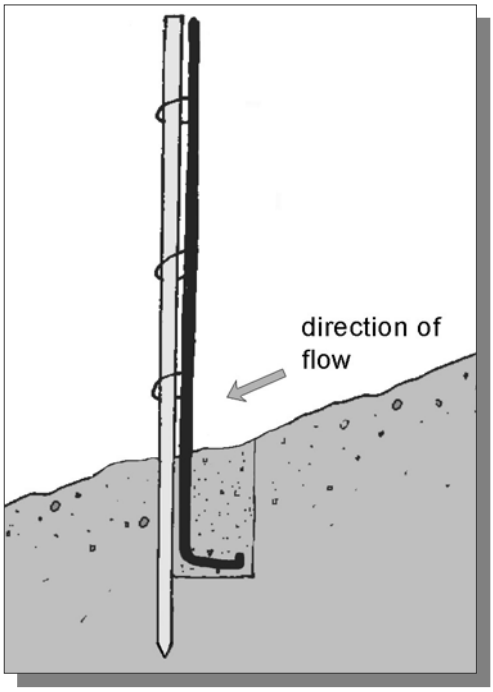

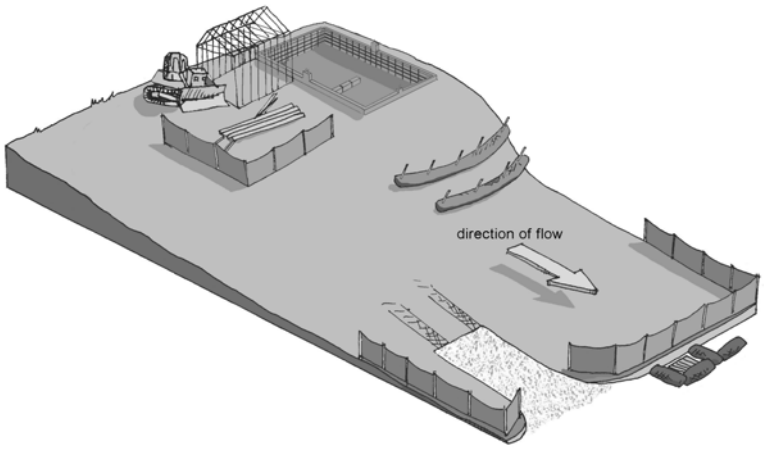

Community Development
1300 Franklin Street, Vancouver, Washington
Phone: (360) 397-2375 Fax: (360) 397-2011
www.clark.wa.gov/development

For an alternate format,
contact the Clark County
ADA Compliance Office.
Phone: (360) 397-2322
Relay: 711 or (800) 833-6384
E-mail: ADA@clark.wa.gov

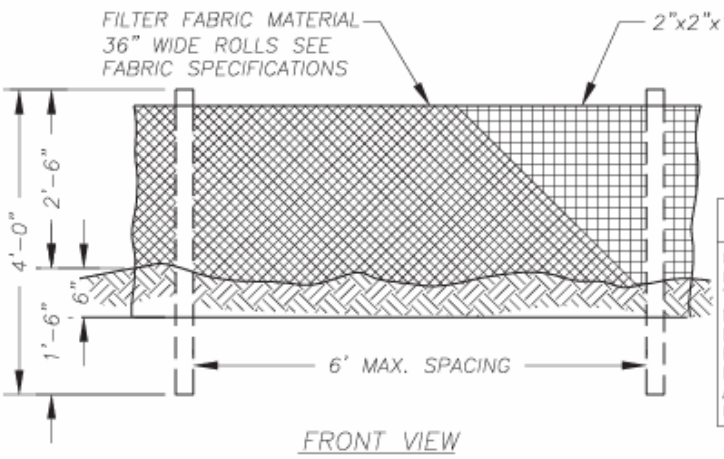

FRONT VIEW

SILT FENCE FABRIC SPECIFICATIONS
(WOVEN POLYPROYLENE SILT FENCE FABRIC)

PROPERTY	TEST PROCEDURE	MIN. FABRIC VALUE
GRAB TENSILE STRENGTH	ASTM D-4632	180 LBS.
GRAB ELONGATION	ASTM D-4632	30%
TRAPEZOID TEAR	ASTM D-4533	70 LBS.
MULLEN BURST	ASTM D-3786	300 PSI.
PUNCTURE	ASTM D-4833	80 LBS.
PERMITTIVIRY	ASTM D-4491	0.07 SEC-1 MIN.
PERMEABILITY	ASTM D-4491	.005 CM/SEC
A.O.S.	ASTM D-4751	50 U.S. SIEVE
UV RESISTANCE(500 HRS)	ASTM D-4355	70%

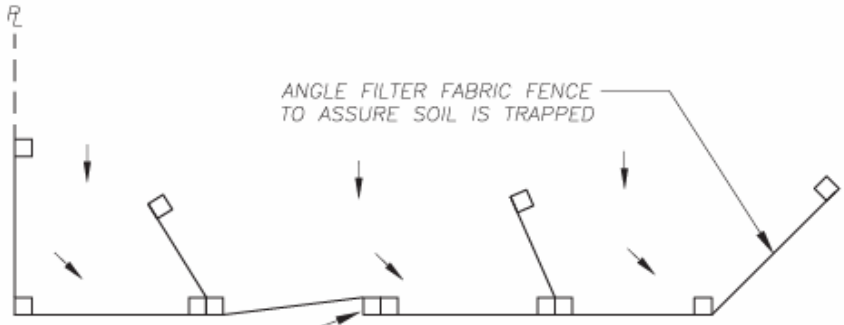

PLAN VIEW

NOTES:

1. THIS SEDIMENT BARRIER UTILIZES STANDARD STRENGTH OR EXTRA STRENGTH SYNTHETIC FILTER FABRICS, IT IS DESIGNED FOR SITUATIONS IN WHICH ONLY SHEET OR OVERLAND FLOWS ARE EXPECTED. (SEE FABRIC SPECIFICATIONS ABOVE).
2. BURY BOTTOM OF FILTER FABRIC 6" VERTICALLY BELOW FINISHED GRADE.
3. POST ARE TO BE 2"x2" FIR, PINE OR STEEL FENCE POSTS.
4. POST TO BE INSTALLED ON UPHILL SIDE OF SLOPE FOR FENCING WITH STITCHED LOOP. FOR STAPLED FENCING, POST TO BE INSTALLED ON DOWNHILL SLOPE.
5. COMPACT BOTH SIDES OF FILTER FABRIC TRENCH.
6. SEDIMENT FENCE TO BE SPACED ON SLOPES PER TABLE BELOW.

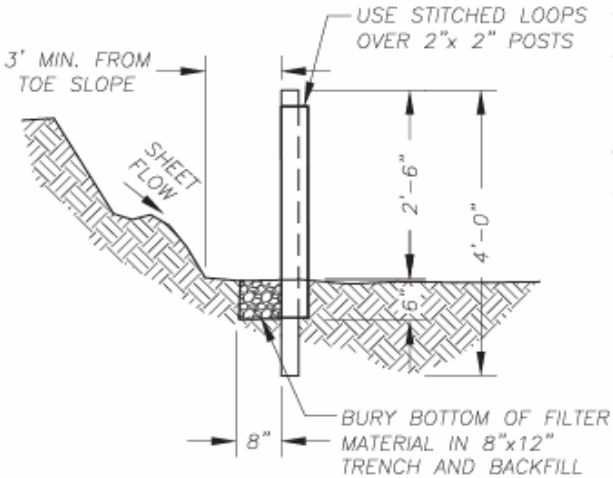

PROFILE

INSTALL PARALLEL ALONG CONTOURS AS FOLLOWS		
% SLOPE	SLOPE	MAX. SPACING ON SLOPE
10% FLATTER	10:1 OR FLATTER	300 ft.
10>%<15	10:1>x<7.5:1	150 ft.
15>%<20	7.5:1>x<5:1	100 ft.
20>%<30	5:1>x<3.5:1	50 ft.
30>%<50	3.5:1>x<2:1	25 ft.

NO.	REVISIONS	DATE	BY

DWG: E4.DWG

Department of Public Works
CLARK COUNTY
WASHINGTON
proud past, promising future

SILT FENCE

APPROVED
COUNTY ENGINEER
5/23/08
DATE

STANDARD
E4
DETAIL
DESIGNED
DRAWN
DATE 05/23/08